MITSUBISHI ELECTRIC

GRAPHIC OPERATION TERMINAL GOT

GRAPHIC OPERATION TERMINAL

GOT1000

GT14 Handy GOT User's Manual

■Hardware • Utility

■Connection(1/2)

• MITSUBISHI FA DEVICE CONNECTIONS

DIRECT CONNECTION TO CPU
COMPUTER LINK CONNECTION
ETHERNET CONNECTION
CC-Link CONNECTION (Via G4)
INVERTER CONNECTION
SERVO AMPLIFIER CONNECTION
ROBOT CONTROLLER CONNECTION
CNC CONNECTION
MULTIPLE GOT CONNECTION FUNCTION
MULTI-CHANNEL FUNCTION
FA TRANSPARENT FUNCTION

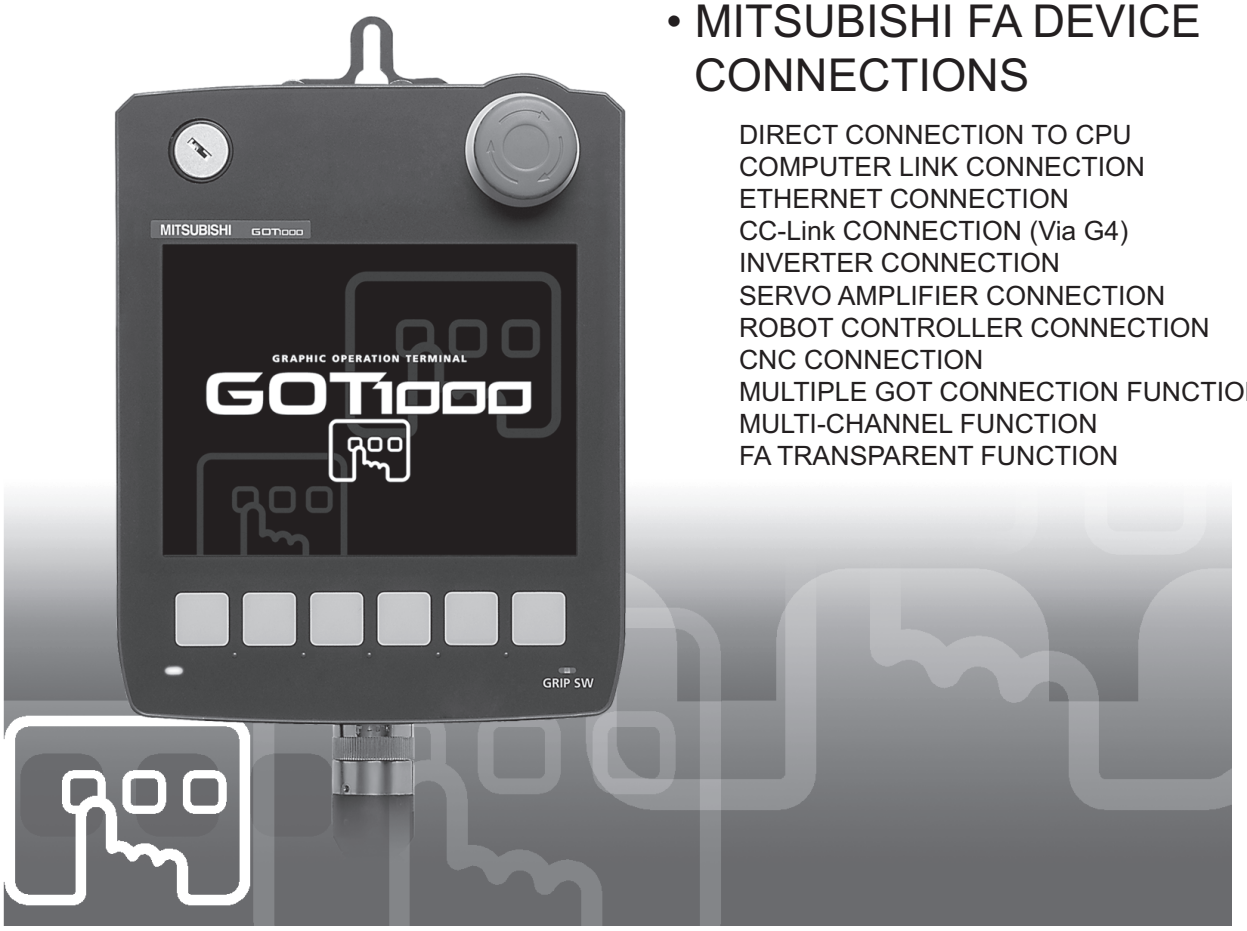

● SAFETY PRECAUTIONS ●

(Always read these precautions before using this equipment.)

Before using this product, please read this manual and the relevant manuals introduced in this manual carefully and pay full attention to safety to handle the product correctly.
The precautions given in this manual are concerned with this product.
In this manual, the safety precautions are ranked as "WARNING" and "CAUTION".

⚠ WARNING	Indicates that incorrect handling may cause hazardous conditions, resulting in death or severe injury.
⚠ CAUTION	Indicates that incorrect handling may cause hazardous conditions, resulting in medium or slight personal injury or physical damage.

Note that the ⚠ caution level may lead to a serious accident according to the circumstances.
Always follow the instructions of both levels because they are important to personal safety.

Please save this manual to make it accessible when required and always forward it to the end user.

[DESIGN PRECAUTIONS]

⚠ WARNING

- Some failures of the GOT, communication unit or cable may keep the outputs on or off.
  Some failures of a touch panel may cause malfunction of the input objects such as a touch switch.
  An external monitoring circuit should be provided to check for output signals which may lead to a serious accident.
  Not doing so can cause an accident due to false output or malfunction.
- If a communication fault (including cable disconnection) occurs during monitoring on the GOT, communication between the GOT and PLC CPU is suspended and the GOT becomes inoperative.
  A system where the GOT is used should be configured to perform any significant operation to the system by using the switches of a device other than the GOT on the assumption that a GOT communication fault will occur.
  Not doing so can cause an accident due to false output or malfunction.
- Do not use the GOT as the warning device that may cause a serious accident.
  An independent and redundant hardware or mechanical interlock is required to configure the device that displays and outputs serious warning.
  Failure to observe this instruction may result in an accident due to incorrect output or malfunction.
- Incorrect operation of the touch switch(s) may lead to a serious accident if the GOT backlight is gone out.
  When the GOT backlight goes out, the POWER LED blinks (green/orange) and the display section dims, while the input of the touch switch(s) remains active.
  This may confuse an operator in thinking that the GOT is in "screensaver" mode, who then tries to release the GOT from this mode by touching the display section, which may cause a touch switch to operate.
  Note that the following occurs on the GOT when the backlight goes out.
  - The POWER LED flickers (green/orange) and the monitor screen appears blank.

[DESIGN PRECAUTIONS]

⚠ WARNING

- The display section is an analog-resistive type touch panel.
  If you touch the display section simultaneously in 2 points or more, the switch that is located around the center of the touched point, if any, may operate.
  Do not touch the display section in 2 points or more simultaneously.
  Doing so may cause an accident due to incorrect output or malfunction.
- When programs or parameters of the controller (such as a PLC) that is monitored by the GOT are changed, be sure to reset the GOT or shut off the power of the GOT at the same time.
  Not doing so can cause an accident due to false output or malfunction.
- To maintain the security (confidentiality, integrity, and availability) of the GOT and the system against unauthorized access, DoS[*1] attacks, computer viruses, and other cyberattacks from unreliable networks and devices via network, take appropriate measures such as firewalls, virtual private networks (VPNs), and antivirus solutions.
  Mitsubishi Electric shall have no responsibility or liability for any problems involving GOT trouble and system trouble by unauthorized access, DoS attacks, computer viruses, and other cyberattacks.
  *1 DoS: A denial-of-service (DoS) attack disrupts services by overloading systems or exploiting vulnerabilities, resulting in a denial-of-service (DoS) state.

[DESIGN PRECAUTIONS]

⚠ CAUTION

- Do not bundle the control and communication cables with main-circuit, power or other wiring.
  Run the above cables separately from such wiring and keep them a minimum of 100mm apart.
  Not doing so noise can cause a malfunction.
- Do not press the GOT display section with a pointed material as a pen or driver.
  Doing so can result in a damage or failure of the display section.
- When the GOT is connected to the Ethernet network, the available IP address is restricted according to the system configuration.
  - When multiple GOTs are connected to the Ethernet network:
    Do not set the IP address (192.168.0.18) for the GOTs and the controllers in the network.
  - When a single GOT is connected to the Ethernet network:
    Do not set the IP address (192.168.0.18) for the controllers except the GOT in the network.

  Doing so can cause the IP address duplication. The duplication can negatively affect the communication of the device with the IP address (192.168.0.18).
  The operation at the IP address duplication depends on the devices and the system.
- Turn on the controllers and the network devices to be ready for communication before they communicate with GOT.
  Failure to do so can cause a communication error on the GOT.

[MOUNTING PRECAUTIONS]

⚠ WARNING

- Be sure to shut off all phases of the external power supply used by the system before mounting or removing the GOT to/from the panel.
  Not switching the power off in all phases can cause a unit failure or malfunction.
- Always turn off the power ON/OFF switch on the connector conversion box before connecting or disconnecting the GOT to it.
  Connecting or disconnecting the GOT with the power being turned on may result in damage to the unit or malfunctions.

[MOUNTING PRECAUTIONS]

⚠ CAUTION

- Use the GOT in the environment that satisfies the general specifications described in the User's Manual.
  Not doing so can cause an electric shock, fire, malfunction or product damage or deterioration.
- Never drop cutting chips and electric wire chips into the ventilation window of the GOT when you drill screw holes or perform wiring.
  Otherwise, fire, failure or malfunction may be caused.
- Connect connection cables securely to the specified connectors while the power is turned OFF.
  Imperfect connection may cause malfunction or failure.
- When inserting/removing a SD card into/from the GOT, turn the SD card access switch off in advance.
  Failure to do so may corrupt data within the SD card.
- When removing a SD card from the GOT, make sure to support the SD card by hand, as it may pop out.
  Failure to do so may cause the SD card to drop from the GOT and break.
- When installing a USB memory to the GOT, make sure to install the USB memory to the USB interface firmly.
  Failure to do so may cause a malfunction due to poor contact.
- Before removing the USB memory from the GOT, operate the utility screen for removal.
  After the successful completion dialog box is displayed, remove the memory by hand carefully.
  Failure to do so may cause the USB memory to drop, resulting in a damage or failure of the memory.
- Operate and store the GOT in environments without direct sunlight, high temperature, dust, humidity, and vibrations.

[WIRING PRECAUTIONS]

⚠ WARNING

- Be sure to shut off all phases of the external power supply used by the system before wiring. Failure to do so may result in an electric shock, product damage or malfunctions.
- Please make sure to ground FG terminal of the GOT power supply section by applying 100 or less which is used exclusively for the GOT. Not doing so may cause an electric shock or malfunction.
- Correctly wire the GOT power supply section after confirming the rated voltage and terminal arrangement of the product. Not doing so can cause a fire or failure.
- Exercise care to avoid foreign matter such as chips and wire offcuts entering the GOT. Not doing so can cause a fire, failure or malfunction.

[WIRING PRECAUTIONS]

⚠ CAUTION

- The cables connected to the unit must be run in ducts or clamped.
  Not doing so can cause the unit or cable to be damaged due to the dangling, motion or accidental pulling of the cables or can cause a malfunction due to a cable connection fault.
- When unplugging the cable connected to the unit, do not hold and pull the cable portion.
  Doing so can cause the unit or cable to be damaged or can cause a malfunction due to a cable connection fault.
- Plug the communication cable into the connector of the connected unit and tighten the mounting and terminal screws in the specified torque range.
  Undertightening can cause a short circuit or malfunction. Overtightening can cause a short circuit or malfunction due to the damage of the screws or unit.

[TEST OPERATION PRECAUTIONS]

⚠ WARNING

- Before performing the test operations of the user creation monitor screen (such as turning ON or OFF bit device, changing the word device current value, changing the settings or current values of the timer or counter, and changing the buffer memory current value), read through the manual carefully and make yourself familiar with the operation method.
  During test operation, never change the data of the devices which are used to perform significant operation for the system.
  False output or malfunction can cause an accident.

[STARTUP/MAINTENANCE PRECAUTIONS]

⚠ WARNING

- When power is on, do not touch the terminals.
  Doing so can cause an electric shock or malfunction.
- Correctly connect the battery connector.
  Do not charge, disassemble, heat, short-circuit, solder, or throw the battery into the fire.
  Doing so will cause the battery to produce heat, explode, or ignite, resulting in injury and fire.
- Before starting cleaning or terminal screw retightening, always switch off the power externally in all phases.
  Not switching the power off in all phases can cause a unit failure or malfunction.
  Undertightening can cause a short circuit or malfunction.
  Overtightening can cause a short circuit or malfunction due to the damage of the screws or unit.

[STARTUP/MAINTENANCE PRECAUTIONS]

⚠ CAUTION

- Do not disassemble or modify the unit.
  Doing so can cause a failure, malfunction, injury or fire.
- Do not touch the conductive and electronic parts of the unit directly.
  Doing so can cause a unit malfunction or failure.
- Do not drop or apply strong impact to the unit.
  Doing so may damage the unit.
- Do not drop or give an impact to the battery mounted to the unit.
  Doing so may damage the battery, causing the battery fluid to leak inside the battery.
  If the battery is dropped or given an impact, dispose of it without using.
- For repair of the backlight, contact your local Mitsubishi (Electric System) Service.
- Before touching the unit, always touch grounded metal, etc. to discharge static electricity from human body, etc.
  Not doing so can cause the unit to fail or malfunction.
- Replace battery with GT11-50BAT by Mitsubishi electric Co. only.
  Use of another battery may present a risk of fire or explosion.
- Dispose of used battery promptly.
  Keep away from children. Do not disassemble and do not dispose of in fire.

[DISPOSAL PRECAUTIONS]

⚠ CAUTION

- When disposing of the product, handle it as industrial waste.
- When disposing of this product, treat it as industrial waste. When disposing of batteries, separate them from other wastes according to the local regulations.
  (For details of the battery directive in EU member states, refer to the User's Manual of the GOT to be used.)

[TOUCH PANEL PRECAUTIONS]

⚠ CAUTION

- For the analog-resistive film type touch panels, normally the adjustment is not required. However, the difference between a touched position and the object position may occur as the period of use elapses. When any difference between a touched position and the object position occurs, execute the touch panel calibration.
- When any difference between a touched position and the object position occurs, other object may be activated. This may cause an unexpected operation due to incorrect output or malfunction.

[TRANSPORTATION PRECAUTIONS]

⚠ CAUTION

- When transporting lithium batteries, make sure to treat them based on the transport regulations.
  (For details on models subject to restrictions, refer to the User's Manual for the GOT you are using.)
- Before transporting the GOT, turn the GOT power on and check that the battery voltage status is normal on the Time setting & display screen (utilities screen). In addition, confirm that the adequate battery life remains on the rating plate.
  Transporting the GOT with the low battery voltage or the battery the reached battery life may unstabilize the backup data unstable during transportation.
- Make sure to transport the GOT main unit and/or relevant unit(s) in the manner they will not be exposed to the impact exceeding the impact resistance described in the general specifications of the User's Manual, as they are precision devices.
  Failure to do so may cause the unit to fail.
  Check if the unit operates correctly after transportation.

INTRODUCTION

Thank you for choosing Mitsubishi Electric Graphic Operation Terminal (Mitsubishi GOT).
Read this manual and make sure you understand the functions and performance of the GOT thoroughly in advance to ensure correct use.

CONTENTS

GT14 Handy GOT User's Manual 1/2

SAFETY PRECAUTIONS ..... A - 1
INTRODUCTION ..... A - 7
CONTENTS ..... A - 7
MANUALS ..... A - 33
QUICK REFERENCE ..... A - 33
ABBREVIATIONS AND GENERIC TERMS ..... A - 34
HOW TO READ THIS MANUAL ..... A - 39

1. OVERVIEW

1.1 Features ..... 1 - 2
1.1.1 Rough procedure ..... 1 - 3

2. SYSTEM CONFIGURATION

2.1 Overall Configuration ..... 2 - 1
2.2 System Equipment ..... 2 - 2
2.2.1 GOT ..... 2 - 3
2.2.2 OPTION ..... 2 - 3

3. SPECIFICATIONS

3.1 General Specifications ..... 3 - 1
3.2 Performance Specifications ..... 3 - 2
3.3 Power Supply Specifications ..... 3 - 4
3.4 Battery specifications ..... 3 - 5
3.4.1 Applicable battery ..... 3 - 5
3.4.2 Battery specifications ..... 3 - 5

4. PARTS NAME

4.1 Front Panel ..... 4 - 1
4.1.1 Name and specifications ..... 4 - 1
4.2 Back Panel ..... 4 - 2
4.2.1 Name and specifications ..... 4 - 2
4.2.2 Opening and closing of environmental protection back cover ..... 4 - 3
4.3 Top Face (Interface) ..... 4 - 4
4.3.1 Names and specifications ..... 4 - 4

5. UL, cUL STANDARDS AND EMC DIRECTIVE

5.1 UL, cUL Standards ..... 5 - 1
5.2 EMC Directive ..... 5 - 2
5.2.1 Requirements to Meet EMC Directive ..... 5 - 2
5.2.2 EMC Directive-Compliant System Configuration ..... 5 - 4
5.2.3 Precautions for Wiring/Connecting the EMC Directive-Compliant Product ..... 5 - 6

6. OPTION

6.1 SD Card ..... 6 - 1
6.1.1 Applicable SD card ..... 6 - 1
6.1.2 Installing and removing procedures of the SD card ..... 6 - 1
6.2 USB Memory ..... 6 - 4
6.2.1 Applicable USB memory ..... 6 - 4
6.2.2 Installing and removing procedures of the USB memory ..... 6 - 4
6.3 Battery ..... 6 - 5
6.3.1 Applicable battery ..... 6 - 5
6.3.2 Battery replacement procedure ..... 6 - 5
6.4 Protective Sheet ..... 6 - 7
6.4.1 Applicable protective sheet ..... 6 - 7
6.4.2 Installing procedure ..... 6 - 7
6.5 Emergency Stop Switch Guard Cover ..... 6 - 8
6.5.1 Applicable emergency stop SW guard cover ..... 6 - 8
6.5.2 Installing procedure ..... 6 - 8
6.6 Connector Conversion Box ..... 6 - 9
6.6.1 Applicable Connector Conversion Box ..... 6 - 9
6.6.2 Connector Conversion Box (GT16H-CNB-42S) ..... 6 - 9
6.6.3 Connector Conversion Box (GT11H-CNB-37S) ..... 6 - 24
6.6.4 Connector conversion box (GT16H-CNB-37S) ..... 6 - 29
6.7 With wall-mounting Attachment ..... 6 - 34
6.7.1 Applicable With wall-mounting Attachment ..... 6 - 34
6.7.2 Mounting ..... 6 - 34
6.7.3 Attachment of GT14 handy GOT ..... 6 - 35

7. INSTALLATION

7.1 Installing Procedure ..... 7 - 1
7.1.1 Holding the Handy GOT in hand ..... 7 - 1
7.1.2 Hanging on a wall ..... 7 - 2
7.1.3 Placing on a desk or a floor ..... 7 - 2
7.1.4 Installing to/removing from panel ..... 7 - 3

8. COMMUNICATION CABLE

8.1 Overview of Communication Cable ..... 8 - 1
8.2 External Cable, Relay Cable ..... 8 - 4
8.2.1 Pin layout and signal names of the external cable ..... 8 - 4
8.2.2 Pin layout of the relay cable ..... 8 - 6
8.2.3 Connector specifications ..... 8 - 9
8.2.4 Installing and removing of external cable ..... 8 - 9

9. HANDLING OF POWER WIRING AND SWITCH

9.1 Internal Wiring Diagram of GT14 Handy ..... 9 - 3
9.2 Power Wiring ..... 9 - 4
9.2.1 Power wiring and grounding ..... 9 - 4
9.2.2 The cause of malfunctions related wiring/Remedy ..... 9 - 5
9.3 Wiring inside and outside the panel ..... 9 - 8
9.3.1 Wiring inside ..... 9 - 8
9.3.2 Outside the panel ..... 9 - 8
9.3.3 Attaching surge killers to control equipment ..... 9 - 9
9.4 Switch Wiring ..... 9 - 10
9.4.1 Overview for switch ..... 9 - 10
9.4.2 Switch wiring example ..... 9 - 11
9.4.3 Operation switch wiring ..... 9 - 15
9.4.4 Operation switch input ..... 9 - 15
9.4.5 Emergency stop switch wiring ..... 9 - 16
9.4.6 Grip switch ..... 9 - 19
9.4.7 Grip switch wiring ..... 9 - 19
9.4.8 LED settings of grip switch ..... 9 - 21
9.4.9 Keylock switch (2-position SW) ..... 9 - 21

10. UTILITY FUNCTION

10.1 Utility Execution ..... 10 - 1
10.2 Utility Function List ..... 10 - 2
10.3 Utility Display ..... 10 - 4
10.3.1 Display operation of main menu ..... 10 - 6
10.3.2 Utility basic configuration ..... 10 - 8
10.3.3 Basic operation of settings change ..... 10 - 9

11. COMMUNICATION INTERFACE SETTING (COMMUNICATION SETTING)

11.1 Communication setting ..... 11 - 1
11.1.1 Communication setting functions ..... 11 - 1
11.1.2 Display operation of Communication Setting ..... 11 - 1
11.1.3 Communication setting contents ..... 11 - 2
11.1.4 Communication setting operation ..... 11 - 4
11.2 Communication Detail Setting ..... 11 - 7
11.2.1 Communication detail setting functions ..... 11 - 7
11.2.2 Display operation of Communication Detail setting ..... 11 - 7
11.2.3 Display contents of Communication Detail setting ..... 11 - 9
11.3 Ethernet Setting ..... 11 - 13
11.3.1 Ethernet setting functions ..... 11 - 13
11.3.2 Display operation of Ethernet setting ..... 11 - 13
11.3.3 Display contents of Ethernet setting ..... 11 - 14

12. DISPLAY AND OPERATION SETTINGS (GOT SET UP)

12.1 Display Setting ..... 12 - 1
12.1.1 Function of Display ..... 12 - 1
12.1.2 Display operation of Display ..... 12 - 3
12.1.3 Display operations ..... 12 - 4

12.2 Operation Setting (Settings Regarding Operation) ..... 12 - 7
12.2.1 Operation setting functions ..... 12 - 7
12.2.2 Display operation of Operation ..... 12 - 8
12.2.3 Setting operation of operation ..... 12 - 9
12.2.4 Security level change ..... 12 - 10
12.2.5 Utility Call Key Setting ..... 12 - 12
12.2.6 Adjusting the touch panel position (Touch panel calibration) ..... 12 - 14
12.2.7 USB mouse/keyboard setting ..... 12 - 16
12.2.8 VNC(R) server function setting ..... 12 - 18
12.3 Transparent Mode Setting ..... 12 - 19
12.4 Backup/Restoration Setting ..... 12 - 20
12.5 Behavior of Duplicate IPs ..... 12 - 23
12.6 License Management ..... 12 - 26

13. CLOCK SETTINGS AND BATTERY STATUS DISPLAY (TIME SETTING AND DISPLAY)

13.1 Time Setting and Display ..... 13 - 1
13.1.1 Time setting and display functions ..... 13 - 1

14. FILE DISPLAY AND COPY (PROGRAM/DATA CONTROL)

14.1 Data Storage Location ..... 14 - 1
14.1.1 Data type and storage location ..... 14 - 1
14.1.2 OS version confirmation ..... 14 - 3
14.1.3 Capacity confirmation of the project data downloading location ..... 14 - 4
14.1.4 Display file ..... 14 - 4
14.2 Various Data Control ..... 14 - 5
14.2.1 OS information ..... 14 - 5
14.2.2 Alarm information ..... 14 - 11
14.2.3 Project Information ..... 14 - 17
14.2.4 Hard copy information ..... 14 - 27
14.2.5 Advanced recipe information ..... 14 - 33
14.2.6 Logging information ..... 14 - 53
14.2.7 Memory card format ..... 14 - 63
14.2.8 Memory information ..... 14 - 65
14.2.9 USB device status display ..... 14 - 66
14.2.10 SRAM control ..... 14 - 68
14.2.11 GOT data package acquisition ..... 14 - 73
14.2.12 Operator information management ..... 14 - 74

15. GOT SELF CHECK (DEBUG AND SELF CHECK)

15.1 Debug ..... 15 - 1
15.1.1 System monitor ..... 15 - 1
15.1.2 A list editor ..... 15 - 1
15.1.3 FX list editor ..... 15 - 1
15.1.4 Backup/restoration ..... 15 - 2
15.2 Self Check ..... 15 - 3
15.2.1 Memory check ..... 15 - 3
15.2.2 Drawing check ..... 15 - 6
15.2.3 Font check ..... 15 - 10

15.2.4 Touch panel check ..... 15 - 12
15.2.5 I/O check ..... 15 - 14
15.2.6 Ethernet status check ..... 15 - 18
15.3 System Alarm Display ..... 15 - 20
15.4 GOT start time ..... 15 - 22

16. CLEANING DISPLAY SECTION (CLEAN)

17. INSTALLATION OF COREOS, BOOTOS AND STANDARD MONITOR OS

17.1 BootOS and Standard Monitor OS Required for Installation ..... 17 - 2
17.2 Prior Preparations for Installing BootOS and Standard Monitor OS ..... 17 - 3
17.3 BootOS and Standard Monitor OS Installation Using SD card or USB Memory ..... 17 - 4
17.3.1 Installing when starting the GOT ..... 17 - 5
17.3.2 Installing using the program/data control function (Utility) ..... 17 - 7
17.4 When Installing the Different Version of BootOS, Standard Monitor OS ..... 17 - 9
17.5 CoreOS ..... 17 - 11
17.5.1 Installing the CoreOS ..... 17 - 11
17.5.2 When the CoreOS cannot be installed ..... 17 - 13

18. DRAWING SOFTWARE SETTINGS (CONTROLLER SETTING AND COMMON SETTINGS)

18.1 Setting the Communication Interface ..... 18 - 1
18.1.1 Setting connected equipment (Channel setting) ..... 18 - 2
18.1.2 I/F communication setting ..... 18 - 12
18.1.3 Precautions ..... 18 - 14
18.2 Common Settings Dedicated to Handy GOT ..... 18 - 14
18.3 Writing the Communication Settings and Common Settings onto the GOT ..... 18 - 15
18.3.1 Writing the project data and OS onto the GOT ..... 18 - 15
18.3.2 Checking the project data and OS writing on GOT ..... 18 - 16

19. MAINTENANCE AND INSPECTION

19.1 Daily Inspection ..... 19 - 2
19.2 Periodic Inspection ..... 19 - 2
19.3 Cleaning Method ..... 19 - 3
19.4 Battery Voltage Low Detection and Battery Replacement ..... 19 - 4
19.5 Backlight Shutoff Detection ..... 19 - 7
19.5.1 Backlight shutoff detection and external alarm ..... 19 - 7

20. TROUBLESHOOTING

20.1 GOT Restoration Sheet ..... 20 - 1
20.2 Error Message and System Alarm ..... 20 - 11
20.2.1 Error contents display ..... 20 - 11
20.2.2 List of error message/system alarm ..... 20 - 14

MITSUBISHI PLC CONNECTIONS

21. DIRECT CONNECTION TO CPU

21.1 Connectable Model List ..... 21 - 1

21.2 System Configuration ..... 21 - 4
21.2.1 Connecting to QCPU ..... 21 - 4
21.2.2 Connecting to LCPU ..... 21 - 5
21.2.3 Connecting to QnACPU ..... 21 - 7
21.2.4 Connecting to ACPU ..... 21 - 8
21.2.5 Connecting to MELSEC iQ-F Series ..... 21 - 9
21.2.6 Connecting to FXCPU ..... 21 - 15
21.2.7 Connecting to WSCPU ..... 21 - 25
21.2.8 Connecting to the motion controller CPU (Q170MCPU) ..... 21 - 26
21.3 Connection Diagram ..... 21 - 27
21.3.1 RS-232 cable ..... 21 - 27
21.3.2 RS-422 cable ..... 21 - 28
21.4 GOT Side Settings ..... 21 - 30
21.4.1 Setting communication interface (Communication settings) ..... 21 - 30
21.4.2 Communication detail settings ..... 21 - 30
21.5 PLC Side Setting ..... 21 - 32
21.5.1 L6ADP-R4 adapter settings ..... 21 - 32
21.5.2 L6ADP-R4 adapter settings ..... 21 - 32
21.6 Precautions ..... 21 - 33

22. COMPUTER LINK CONNECTION

22.1 Connectable Model List ..... 22 - 1
22.1.1 PLC/Motion controller CPU ..... 22 - 1
22.1.2 Serial communication module/Computer link module ..... 22 - 4
22.2 System Configuration ..... 22 - 5
22.2.1 Connecting to MELSEC iQ-R series ..... 22 - 5
22.2.2 Connecting to QCPU (Q mode) ..... 22 - 6
22.2.3 Connecting to LCPU ..... 22 - 8
22.2.4 Connecting to QCPU (A mode) ..... 22 - 10
22.2.5 Connecting to QnACPU (QnACPU type) ..... 22 - 12
22.2.6 Connecting to QnACPU (QnASCPU type) ..... 22 - 15
22.2.7 Connecting to ACPU (AnCPU type) ..... 22 - 18
22.2.8 Connecting to ACPU (AnSCPU type, A0J2HCPU, A2CCPUC) ..... 22 - 19
22.3 Connection Diagram ..... 22 - 21
22.3.1 RS-232 cable ..... 22 - 21
22.3.2 RS-422 cable ..... 22 - 22
22.4 GOT Side Settings ..... 22 - 24
22.4.1 Setting communication interface (Communication settings) ..... 22 - 24
22.4.2 Communication detail settings ..... 22 - 24
22.5 PLC Side Setting ..... 22 - 26
22.5.1 Connecting serial communication module (MELSEC iQ-R Series) ..... 22 - 26
22.5.2 Connecting serial communication module (Q, L Series) ..... 22 - 27
22.5.3 Connecting serial communication module (QnA Series) ..... 22 - 28
22.5.4 Connecting computer link module ..... 22 - 30
22.6 Precautions ..... 22 - 33

23. ETHERNET CONNECTION

23.1 Connectable Model List ..... 23 - 1
23.1.1 PLC/Motion controller CPU ..... 23 - 1

23.1.2 Ethernet module ..... 23 - 4
23.2 System Configuration ..... 23 - 5
23.2.1 Connecting to Ethernet module ..... 23 - 5
23.2.2 Connection to Built-in Ethernet port CPU or C controller module ..... 23 - 9
23.2.3 Connecting to Display I/F ..... 23 - 11
23.2.4 Connecting to CC-Link IE Field Network Ethernet adapter module ..... 23 - 12
23.2.5 Connecting to PERIPHERAL I/F ..... 23 - 13
23.3 GOT Side Settings ..... 23 - 14
23.3.1 Setting communication interface (Communication settings) ..... 23 - 14
23.3.2 Communication detail settings ..... 23 - 14
23.3.3 Ethernet setting ..... 23 - 15
23.3.4 Routing parameter setting ..... 23 - 16
23.4 PLC Side Setting ..... 23 - 17
23.4.1 Connecting to Built-in Ethernet port CPU (one-to one connection) ..... 23 - 18
23.4.2 Connecting to Built-in Ethernet port CPU (multiple connection) ..... 23 - 19
23.4.3 Connecting to Ethernet module (MELSEC iQ-R Series) ..... 23 - 21
23.4.4 Connection to C Controller module (MELSEC iQ-R Series) ..... 23 - 24
23.4.5 Connecting to Built-in Ethernet port CPU (one-to-one connection) ..... 23 - 26
23.4.6 Connecting to Built-in Ethernet port CPU (multiple connection) ..... 23 - 28
23.4.7 Connecting to Ethernet module (Q/L Series) ..... 23 - 30
23.4.8 Connecting to C controller module (Q Series) ..... 23 - 33
23.4.9 Connecting to Ethernet module (QnA Series) ..... 23 - 36
23.4.10 Connecting to Ethernet module (A Series) ..... 23 - 39
23.4.11 Connecting to Ethernet module (FX Series) ..... 23 - 43
23.4.12 Connecting to Built-in Ethernet port FXCPU (FX3GE) ..... 23 - 47
23.4.13 Connecting to Display I/F (CNC C70) ..... 23 - 49
23.4.14 Connecting to CC-Link IE Field Network Ethernet adapter module ..... 23 - 51
23.4.15 Connecting to PERIPHERAL I/F (Built-in Ethernet port Motion Controller CPU) ..... 23 - 53
23.5 Precautions ..... 23 - 56

24. CC-Link CONNECTION (Via G4)

24.1 Connectable Model List ..... 24 - 1
24.1.1 PLC/Motion controller CPU ..... 24 - 1
24.1.2 CC-Link module/peripheral module ..... 24 - 3
24.2 System Configuration ..... 24 - 4
24.2.1 Connecting to QCPU (Q mode) ..... 24 - 4
24.2.2 Connecting to LCPU ..... 24 - 6
24.3 Connection Diagram ..... 24 - 8
24.3.1 RS-232 cable ..... 24 - 8
24.4 GOT Side Settings ..... 24 - 9
24.4.1 Setting communication interface (Communication settings) ..... 24 - 9
24.4.2 Communication detail settings ..... 24 - 9
24.5 PLC Side Setting ..... 24 - 10
24.5.1 Connecting AJ65BT-G4-S3 ..... 24 - 10
24.5.2 Connecting AJ65BT-R2N ..... 24 - 11
24.5.3 Switch setting of CC-Link module (Q Series) ..... 24 - 13
24.5.4 [Network parameter] of GX Developer ..... 24 - 13
24.5.5 Parameter setting (when connecting to C controller module (Q Series)) ..... 24 - 14
24.5.6 [Controller Setting] of GT Designer3 ..... 24 - 15

24.6 Precautions ..... 24 - 16

MITSUBISHI FA DEVICE CONNECTIONS

25. INVERTER CONNECTION

25.1 Connectable Model List ..... 25 - 1
25.2 System Configuration ..... 25 - 2
25.2.1 Connecting to FREQROL-A500/A500L/F500/F500L/V500/V500L ..... 25 - 2
25.2.2 Connecting to FREQROL-E500/S500/S500E/F500J/D700/F700PJ ..... 25 - 7
25.2.3 Connecting to FREQROL E700/sensorless servo (FREQROL-E700EX) ..... 25 - 10
25.2.4 Connecting to FREQROL-A700/F700/F700P ..... 25 - 14
25.2.5 Connecting to FREQROL-A800/F800 ..... 25 - 20
25.2.6 Connecting to MD-CX522-□□K(-A0) ..... 25 - 24
25.3 Connection Diagram ..... 25 - 27
25.3.1 RS-422 cable ..... 25 - 27
25.4 GOT Side Settings ..... 25 - 34
25.4.1 Setting communication interface (Communication settings) ..... 25 - 34
25.4.2 Communication detail settings ..... 25 - 34
25.5 FREQROL Series Inverter Side Settings ..... 25 - 35
25.5.1 Connecting to FREQROL-S500, S500E, or F500J series ..... 25 - 35
25.5.2 Connecting to FREQROL-E500 series ..... 25 - 35
25.5.3 Connecting to FREQROL-F500, F500L series ..... 25 - 36
25.5.4 Connecting to FREQROL-A500 or A500L series ..... 25 - 36
25.5.5 Connecting to FREQROL-V500 or V500L series ..... 25 - 37
25.5.6 Connecting to FREQROL-E700 or sensorless servo (FREQROL-E700EX) series ..... 25 - 37
25.5.7 Connecting to FREQROL-D700/F700PJ series ..... 25 - 38
25.5.8 Connecting to FREQROL-F700/F700P ..... 25 - 39
25.5.9 Connecting to FREQROL-A700 series ..... 25 - 40
25.5.10 Connecting FREQROL-A800/F800 series ..... 25 - 41
25.5.11 Connecting sensorless servo (FREQROL-E700EX series) ..... 25 - 42
25.5.12 Connecting to MD-CX522-□□K(-A0) ..... 25 - 43
25.5.13 Station number setting ..... 25 - 43
25.6 Device Range that Can Be Set ..... 25 - 44
25.7 Precautions ..... 25 - 44

26. SERVO AMPLIFIER CONNECTION

26.1 Connectable Model List ..... 26 - 1
26.2 System Configuration ..... 26 - 2
26.2.1 Connecting to the MELSERVO-J2-Super or MELSERVO-J2M Series ..... 26 - 2
26.2.2 Connecting to MELSERVO-J4 or J3 series ..... 26 - 5
26.2.3 Connecting to the MELSERVO-JE Super Series ..... 26 - 9
26.3 Connection Diagram ..... 26 - 11
26.3.1 RS-232 cable ..... 26 - 11
26.3.2 RS-422 cable ..... 26 - 12
26.4 GOT Side Settings ..... 26 - 17
26.4.1 Setting communication interface (Communication settings) ..... 26 - 17
26.4.2 Communication detail settings ..... 26 - 17
26.5 Setting on Servo Amplifier Side ..... 26 - 18
26.5.1 Connecting to the MELSERVO-J2-Super series ..... 26 - 18

26.5.2 Connecting to the MELSERVO-J2M series ..... 26 - 19
26.5.3 Connecting to the MELSERVO-J4, J3, or JE Series ..... 26 - 20
26.5.4 Station number setting ..... 26 - 20
26.6 Device Range that Can Be Set ..... 26 - 21
26.7 Precautions ..... 26 - 21

27. ROBOT CONTROLLER CONNECTION

27.1 Connectable Model List ..... 27 - 1
27.2 System Configuration ..... 27 - 1
27.2.1 Connecting to robot controller (CRnD-700) ..... 27 - 1
27.3 GOT Side Settings ..... 27 - 2
27.3.1 Setting communication interface (Communication settings) ..... 27 - 2
27.3.2 Communication detail settings ..... 27 - 2
27.3.3 Ethernet setting ..... 27 - 3
27.4 PLC Side Setting ..... 27 - 4
27.4.1 Connecting to robot controller (CRnD-700) ..... 27 - 4
27.5 Device Range that Can Be Set ..... 27 - 5
27.6 Precautions ..... 27 - 5

28. CNC CONNECTION

28.1 Connectable Model List ..... 28 - 1
28.2 System Configuration ..... 28 - 1
28.2.1 Direct connection to CPU ..... 28 - 1
28.2.2 Ethernet connection ..... 28 - 3
28.3 Connection Diagram ..... 28 - 4
28.3.1 RS-232 cable ..... 28 - 4
28.4 GOT Side Settings ..... 28 - 5
28.4.1 Setting communication interface (Communication settings) ..... 28 - 5
28.4.2 Communication detail settings ..... 28 - 5
28.4.3 Ethernet setting ..... 28 - 6
28.5 CNC Side Settings ..... 28 - 7
28.5.1 Ethernet Connection ..... 28 - 7

MULTIPLE GOT CONNECTION FUNCTION

29. MULTIPLE GOT CONNECTION FUNCTION

29.1 Connectable Model List ..... 29 - 1
29.2 System Configuration ..... 29 - 1
29.2.1 Connecting the GOT to PLC via RS-232 interface ..... 29 - 1
29.2.2 Connecting the GOT to PLC via RS-422 interface ..... 29 - 3
29.3 Connection Diagram ..... 29 - 5
29.3.1 RS-232 cable ..... 29 - 5
29.3.2 RS-422 cable ..... 29 - 6
29.4 GOT Side Settings ..... 29 - 7
29.4.1 Setting communication interface (Communication settings) ..... 29 - 7
29.4.2 Communication detail settings ..... 29 - 8
29.5 Precautions ..... 29 - 10

MULTI-CHANNEL FUNCTION

30. MULTI-CHANNEL FUNCTION

30.1 What is Multi-channel Function? ..... 30 - 1
30.2 System Configuration ..... 30 - 2
30.3 GOT Side Settings ..... 30 - 3
30.3.1 General flow from system selection to drawing ..... 30 - 3
30.3.2 Determining the connection type and channel No. (System selection) ..... 30 - 4
30.3.3 Determining the GOT side interface (Interface selection) ..... 30 - 5
30.3.4 Setting for communication settings ..... 30 - 8
30.3.5 Items to be checked before starting drawing ..... 30 - 9
30.4 Precautions ..... 30 - 11
30.4.1 Precautions for use ..... 30 - 11
30.5 Multi-channel function check sheet ..... 30 - 12

FA TRANSPARENT FUNCTION

31. FA TRANSPARENT FUNCTION

31.1 FA Transparent Function ..... 31 - 1
31.2 Compatible Software ..... 31 - 1
31.3 List of Models that Can Be Monitored ..... 31 - 5
31.4 System Configuration ..... 31 - 11
31.4.1 GX Works3, CW Configurator, GX Works2, GX Developer, GX LogViewer, MX Component, MX Sheet, CPU Module Logging Configuration Tool, Setting/Monitoring tool for C Controller module ..... 31 - 11
31.4.2 PX Developer, GX Configurator ..... 31 - 12
31.4.3 MT Developer, MT Works2 ..... 31 - 13
31.4.4 MR Configurator, MR Configurator2 ..... 31 - 14
31.4.5 FR Configurator ..... 31 - 15
31.4.6 FX Configurator-FP, FX3U-ENET-L Configuration tool ..... 31 - 15
31.4.7 RT ToolBox2 ..... 31 - 16
31.4.8 NC Configurator ..... 31 - 16
31.5 GOT Side Settings ..... 31 - 17
31.5.1 Setting communication interface ..... 31 - 17
31.6 Personal Computer Side Setting ..... 31 - 19
31.6.1 Accessing by GX Works3 ..... 31 - 19
31.6.2 Accessing by CW Configurator ..... 31 - 23
31.6.3 Accessing the PLC by GX Developer, PX Developer, or GX Configurator ..... 31 - 25
31.6.4 Accessing by GX Works2 ..... 31 - 29
31.6.5 Accessing by GX LogViewer ..... 31 - 37
31.6.6 Accessing PLC by FX GX Configurator-QP ..... 31 - 38
31.6.7 Accessing by the MT Developer ..... 31 - 39
31.6.8 Accessing by MT Works2 ..... 31 - 40
31.6.9 Accessing the servo amplifier by the MR Configurator ..... 31 - 41
31.6.10 Accessing the servo amplifier by the MR Configurator2 ..... 31 - 41
31.6.11 Accessing the inverter by the FR Configurator ..... 31 - 41
31.6.12 Accessing PLC by FX Configurator-FP ..... 31 - 42
31.6.13 Accessing by FX3U-ENET-L Configuration tool ..... 31 - 42
31.6.14 Accessing by RT ToolBox2 ..... 31 - 43

31.6.15 Accessing by NC Configurator ..... 31 - 45
31.6.16 Accessing by MELSOFT Navigator ..... 31 - 45
31.6.17 Accessing by the CPU Module Logging Configuration Tool ..... 31 - 46
31.6.18 Accessing by Setting/Monitoring tool for C Controller module ..... 31 - 46
31.7 Precautions ..... 31 - 48
31.7.1 Precautions common to each software ..... 31 - 48
31.7.2 When using GX Works3, GX Works2, GX Developer ..... 31 - 49
31.7.3 When using MT Works2, MT Developer ..... 31 - 51
31.7.4 When using MR Configurator2, MR Configurator ..... 31 - 51
31.7.5 When using FR Configurator ..... 31 - 51

APPENDICES

Appendix.1 External Dimensions ..... App - 1
Appendix.2 Usage Condition of Utility Function ..... App - 7
Appendix.3 Transportation Precautions ..... App - 11
Appendix.3.1 Relevant models ..... App - 11
Appendix.3.2 Transportation guidelines ..... App - 11

GT14 Handy GOT User's Manual 2/2

CONNECTIONS TO NON-MITSUBISHI PRODUCTS

32. CONNECTION TO IAI ROBOT CONTROLLER

32.1 Connectable Model List ..... 32 - 1
32.2 System Configuration ..... 32 - 2
32.2.1 Connecting to X-SEL, SSEL, ASEL, PSEL ..... 32 - 2
32.2.2 Connecting to PCON, ACON, SCON, ERC2 ..... 32 - 4
32.3 Connection Diagram ..... 32 - 18
32.3.1 RS-232 cable ..... 32 - 18
32.3.2 RS-422 cable ..... 32 - 21
32.4 GOT Side Settings ..... 32 - 23
32.4.1 Setting communication interface (Communication settings) ..... 32 - 23
32.4.2 Communication detail settings ..... 32 - 23
32.5 Robot Controller Side Setting ..... 32 - 25
32.5.1 Connecting to X-SEL ..... 32 - 25
32.5.2 Connecting to SSEL, ASEL, PSEL ..... 32 - 26
32.5.3 Connecting to PCON, ACON, SCON ..... 32 - 26
32.5.4 Connecting to ERC2 ..... 32 - 26
32.5.5 Station number setting ..... 32 - 27
32.6 Device Range that Can Be Set ..... 32 - 28
32.7 Precautions ..... 32 - 28

33. CONNECTION TO OMRON PLC

33.1 Connectable Model List ..... 33 - 1
33.2 Serial Connection ..... 33 - 2
33.2.1 System configuration for connecting to CPM1, CPM1A, CPM2A, CPM2C or CQM1 ..... 33 - 2
33.2.2 System configuration for connecting to CQM1H ..... 33 - 5
33.2.3 System configuration for connecting to CJ1H, CJ1G, CJ1M, CJ2H, or CJ2M ..... 33 - 8
33.2.4 System configuration for connecting to CP1H, CP1L, or CP1E ..... 33 - 11

33.2.5 System configuration for connecting to C200HS, C200H, C200HX, C200HG, or C200HE ... 33 - 14
33.2.6 System configuration for connecting to CS1H, CS1G, or CS1D ... 33 - 17
33.2.7 System configuration for connecting to C1000H or C2000H ... 33 - 20
33.2.8 System configuration for connecting to CV500, CV1000, CV2000, or CVM1 ... 33 - 21
33.2.9 Connection diagram ... 33 - 23
33.2.10 GOT side settings ... 33 - 28
33.2.11 PLC side setting ... 33 - 29
33.2.12 Connecting to CPM2A, CQM1, CQM1H, C200Hα or RS-232C adapter ... 33 - 29
33.2.13 Connecting to CJ1, CJ2, CS1, CP1H, CP1L, or CP1E ... 33 - 30
33.2.14 Connecting to CV500/CV1000/CV2000 or CVM1 ... 33 - 31
33.2.15 Connecting to connection cable ... 33 - 32
33.2.16 Connecting to rack type host link unit ... 33 - 32
33.2.17 Connecting to serial communication unit ... 33 - 35
33.2.18 Connecting to communication board, serial communication board (CQM1-SCB41) ... 33 - 35
33.2.19 Connecting to serial communication board (CS1W-SCB21(-V1), CS1W-SCB41(-V1)) ... 33 - 36
33.2.20 Connecting to RS-422A/485 Option board ... 33 - 37
33.2.21 Connecting to RS-422A converter ... 33 - 37
33.3 Ethernet Connection ... 33 - 38
33.3.1 System configuration ... 33 - 38
33.3.2 GOT side settings ... 33 - 40
33.3.3 PLC side setting ... 33 - 42
33.3.4 Precautions ... 33 - 43
33.4 Device Range that Can Be Set ... 33 - 43

34. CONNECTION TO OMRON TEMPERATURE CONTROLLER

34.1 Connectable Model List ... 34 - 1
34.2 System Configuration ... 34 - 2
34.2.1 Connecting to the THERMAC NEO series ... 34 - 2
34.2.2 Connecting to the INPANEL NEO ... 34 - 5
34.3 Connection Diagram ... 34 - 7
34.3.1 RS-232 cable ... 34 - 7
34.3.2 RS-485 cable ... 34 - 9
34.4 GOT Side Settings ... 34 - 10
34.4.1 Setting communication interface (Communication settings) ... 34 - 10
34.4.2 Communication detail settings ... 34 - 10
34.5 Temperature Controller Side Setting ... 34 - 11
34.5.1 Connecting to E5AN, E5EN, E5CN, E5GN ... 34 - 11
34.5.2 Connecting to E5ZN ... 34 - 11
34.5.3 Connecting to interface converter (K3SC-10) ... 34 - 11
34.5.4 Station number setting ... 34 - 12
34.6 Device Range that Can Be Set ... 34 - 13
34.7 Precautions ... 34 - 13

35. CONNECTION TO KEYENCE PLC

35.1 Connectable Model List ... 35 - 1
35.2 Serial Connection ... 35 - 2
35.2.1 System configuration for connecting KV-5500,KV-5000 ... 35 - 2
35.2.2 Connecting to KV-3000 ... 35 - 4

35.2.3 Connecting to KV-1000 ..... 35 - 7
35.2.4 Connecting to KV-700 ..... 35 - 10
35.2.5 Connection diagram ..... 35 - 13
35.2.6 GOT side settings ..... 35 - 16
35.2.7 PLC side setting ..... 35 - 17
35.3 Ethernet Connection ..... 35 - 19
35.3.1 System configuration for connecting to KV-700/1000/3000/5000/5500 ..... 35 - 19
35.3.2 GOT side settings ..... 35 - 20
35.3.3 PLC side setting ..... 35 - 21
35.4 Device Range that Can Be Set ..... 35 - 22

36. CONNECTION TO KOYO EI PLC

36.1 Connectable Model List ..... 36 - 1
36.2 System Configuration ..... 36 - 2
36.2.1 Connecting to SU-5E, SU-6B, SU-5M, or SU-6M ..... 36 - 2
36.2.2 Connecting to DirectLOGIC 05 or DirectLOGIC 06 series ..... 36 - 7
36.2.3 Connecting to D2-240, D2-250-1 or D2-260 ..... 36 - 11
36.2.4 Connecting to PZ ..... 36 - 14
36.3 Connection Diagram ..... 36 - 18
36.3.1 RS-232 cable ..... 36 - 18
36.3.2 RS-422 cable ..... 36 - 19
36.4 GOT Side Settings ..... 36 - 29
36.4.1 Setting communication interface (Communication settings) ..... 36 - 29
36.4.2 Communication detail settings ..... 36 - 29
36.5 PLC Side Setting ..... 36 - 30
36.5.1 Connecting to SU-5E/6B ..... 36 - 30
36.5.2 Connecting to SU-5M/6M ..... 36 - 31
36.5.3 Connecting to DirectLOGIC 05 series or DirectLOGIC 06 series ..... 36 - 31
36.5.4 Connecting to DirectLOGIC 205 series ..... 36 - 31
36.5.5 Connecting to PZ Series ..... 36 - 31
36.5.6 Connecting to U-01DM ..... 36 - 32
36.5.7 Connecting to D0-DCM ..... 36 - 33
36.5.8 Connecting to D2-DCM ..... 36 - 33
36.5.9 Station number setting ..... 36 - 33
36.6 Device Range that Can Be Set ..... 36 - 34

37. CONNECTION TO JTEKT PLC

37.1 Connectable Model List ..... 37 - 1
37.2 System Configuration ..... 37 - 2
37.2.1 Connecting to PC3JG, PC3JG-P, PC3JD, or PC3JD-C ..... 37 - 2
37.2.2 Connecting to PC3J or PC3JL ..... 37 - 5
37.2.3 Connecting to PC2J, PC2JS or PC2JR ..... 37 - 8
37.2.4 Connecting to PC2JC, PC216P or PC2J16PR ..... 37 - 11
37.3 Connection Diagram ..... 37 - 14
37.3.1 RS-232 cable ..... 37 - 14
37.3.2 RS-422 cable ..... 37 - 15
37.4 GOT Side Settings ..... 37 - 17
37.4.1 Setting communication interface (Communication settings) ..... 37 - 17
37.4.2 Communication detail settings ..... 37 - 17

37.5 PLC Side Setting ..... 37 - 18
37.5.1 Connecting to PC3JG, PC3JG-P, PC3JD, PC3JD-C, PC3J, PC3JL, PC2J, PC2JS or PC2JR ..... 37 - 18
37.5.2 Connecting to PC2JC ..... 37 - 18
37.5.3 Connecting to PC2J16P or PC2J16PR ..... 37 - 19
37.5.4 RS-232/RS-422 interface converter setting ..... 37 - 19
37.5.5 Link unit setting ..... 37 - 20
37.5.6 Station number setting ..... 37 - 20
37.6 Device Range that Can Be Set ..... 37 - 21
37.7 Precautions ..... 37 - 21

38. CONNECTION TO SHARP PLC

38.1 Connectable Model List ..... 38 - 1
38.2 System Configuration ..... 38 - 2
38.2.1 Connecting to JW-21CU or JW-22CU ..... 38 - 2
38.2.2 Connecting to JW-31CUH, JW-32CUH or JW-33CUH ..... 38 - 4
38.2.3 Connecting to JW-50CUH, JW-70CUH, JW-100CUH or JW-100CU ..... 38 - 6
38.2.4 Connecting to Z-512J ..... 38 - 7
38.3 Connection Diagram ..... 38 - 9
38.3.1 RS-232 cable ..... 38 - 9
38.3.2 RS-422 cable ..... 38 - 10
38.4 GOT Side Settings ..... 38 - 13
38.4.1 Setting communication interface (Communication settings) ..... 38 - 13
38.4.2 Communication detail settings ..... 38 - 13
38.5 PLC Side Setting ..... 38 - 14
38.5.1 Connecting to JW-22CU, JW-70CUH, JW-100CUH or JW-100CU ..... 38 - 14
38.5.2 Connecting to JW-32CUH, JW-33CUH or Z-512J ..... 38 - 15
38.5.3 Connecting to the link unit (JW-21CM) ..... 38 - 15
38.5.4 Connecting to the link unit (JW-10CM or ZW-10CM) ..... 38 - 16
38.6 Device Range that Can Be Set ..... 38 - 17

39. CONNECTION TO SHINKO TECHNOS INDICATING CONTROLLER

39.1 Connectable Model List ..... 39 - 1
39.2 System Configuration ..... 39 - 2
39.2.1 Connecting to ACS-13A, JC, JCM-33A, JIR-301-M, PCD-300 Series, PC-900 Series (PC-955-□/M, C5, PC-935-□/M, C5) ..... 39 - 2
39.2.2 Connecting to FCD-100, FCR-100, FCR-23A, FIR Series, PC-900 Series (PC-955□/M, C, PC-935-□/M, C) ..... 39 - 3
39.2.3 Connecting to DCL-33A Series ..... 39 - 5
39.3 Connection Diagram ..... 39 - 7
39.3.1 RS-232 cable ..... 39 - 7
39.3.2 RS-485 cable ..... 39 - 8
39.4 GOT Side Settings ..... 39 - 9
39.4.1 Setting communication interface (Communication settings) ..... 39 - 9
39.4.2 Communication detail settings ..... 39 - 9

39.5 Indicating Controller Side Setting ..... 39 - 10
39.5.1 Connecting to ACS-13A, DCL- 33A, JC, JCM-33A, JIR-301- M, PCD-300 Series, PC-900 Series (PC-955-□/M, C5, PC- 935-□/M, C5) ..... 39 - 10
39.5.2 Connecting to FCD-100, FCR- 100, FCR-23A, FIR Series, PC-900 Series (PC-955-□/M, C, PC-935-□/M, C) ..... 39 - 10
39.5.3 Connecting to communication converter (IF-400) ..... 39 - 10
39.5.4 Station number setting ..... 39 - 11
39.6 Device Range that Can Be Set ..... 39 - 12
39.7 Precautions ..... 39 - 12

40. CONNECTION TO CHINO CONTROLLER

40.1 Connectable Model List ..... 40 - 1
40.2 System Configuration ..... 40 - 2
40.2.1 Connecting to LT230, LT300, LT400, LT830, DZ1000, DZ2000, DB1000, DB2000 Series ..... 40 - 2
40.2.2 Connecting to KP1000, KP2000, AL3000, AH3000, SE3000, KE3000, LE5100, LE5200, LE5300, or JU Series ..... 40 - 5
40.2.3 Connecting to GT120 Series ..... 40 - 8
40.3 Connection Diagram ..... 40 - 10
40.3.1 RS-232 cable ..... 40 - 10
40.3.2 RS-422 cable ..... 40 - 11
40.3.3 RS-485 cable ..... 40 - 14
40.4 GOT Side Settings ..... 40 - 16
40.4.1 Setting communication interface (Communication settings) ..... 40 - 16
40.4.2 Communication detail settings ..... 40 - 16
40.5 Controller Side Setting ..... 40 - 17
40.5.1 Connecting to LT230, LT300 Series ..... 40 - 17
40.5.2 Connecting to LT400, LT830 Series ..... 40 - 17
40.5.3 Connecting to DZ1000, DZ2000 Series ..... 40 - 17
40.5.4 Connecting to DB1000, DB2000 Series ..... 40 - 18
40.5.5 Connecting to GT120 Series ..... 40 - 18
40.5.6 Connecting to KP1000, KP2000 ..... 40 - 18
40.5.7 Connecting to AL3000, AH3000 ..... 40 - 18
40.5.8 Connecting to SE3000 ..... 40 - 19
40.5.9 Connecting to JU ..... 40 - 19
40.5.10 Connecting to KE3000 ..... 40 - 20
40.5.11 Connecting to LE5100, LE5200, LE5300 ..... 40 - 20
40.5.12 Connecting to converter SC8-10 ..... 40 - 21
40.5.13 Station number setting ..... 40 - 21
40.6 Device Range that Can Be Set ..... 40 - 22
40.7 Precautions ..... 40 - 22

41. CONNECTION TO TOSHIBA PLC

41.1 Connectable Model List ..... 41 - 1
41.2 Serial Connection ..... 41 - 2
41.2.1 System configuration for connecting to PROSEC T Series ..... 41 - 2
41.2.2 System configuration for connecting to PROSEC V Series ..... 41 - 4
41.2.3 Connection diagram ..... 41 - 6
41.2.4 GOT side settings ..... 41 - 10

41.2.5 PLC side setting ..... 41 - 11
41.3 Ethernet Connection ..... 41 - 12
41.3.1 Connecting to Unified Controller nv Series ..... 41 - 12
41.3.2 GOT side settings ..... 41 - 13
41.3.3 PLC side setting ..... 41 - 14
41.3.4 Precautions ..... 41 - 15
41.4 Device Range that Can Be Set ..... 41 - 15

42. CONNECTION TO TOSHIBA MACHINE PLC

42.1 Connectable Model List ..... 42 - 1
42.2 System Configuration ..... 42 - 2
42.2.1 Connecting to TC3, TC6, TC8 ..... 42 - 2
42.2.2 Connecting to TS2000, TS2100 ..... 42 - 3
42.3 Connection Diagram ..... 42 - 4
42.3.1 RS-232 cable ..... 42 - 4
42.4 GOT Side Settings ..... 42 - 6
42.4.1 Setting communication interface (Communication settings) ..... 42 - 6
42.4.2 Communication detail settings ..... 42 - 6
42.5 PLC Side Setting ..... 42 - 7
42.5.1 Connecting to TC3, TC8 series ..... 42 - 7
42.5.2 Connecting to TC6 series ..... 42 - 7
42.5.3 Connecting to TS2000, TS2100 ..... 42 - 7
42.6 Device Range that Can Be Set ..... 42 - 8

43. CONNECTION TO PANASONIC SERVO AMPLIFIER

43.1 Connectable Model List ..... 43 - 1
43.2 System Configuration ..... 43 - 1
43.2.1 Connecting to MINAS A4, MINAS A4F, MINAS A4L, MINAS A5 series ..... 43 - 1
43.3 Connection Diagram ..... 43 - 3
43.3.1 RS-232 cable ..... 43 - 3
43.3.2 RS-485 cable ..... 43 - 4
43.4 GOT Side Settings ..... 43 - 5
43.4.1 Setting communication interface (Communication settings) ..... 43 - 5
43.4.2 Communication detail settings ..... 43 - 5
43.5 Setting on Servo Amplifier Side ..... 43 - 6
43.5.1 Connecting to MINAS A4/A4F/A4L ..... 43 - 6
43.5.2 Connecting to MINAS A5 ..... 43 - 6
43.5.3 Station number setting ..... 43 - 6
43.6 Device Range that Can Be Set ..... 43 - 7
43.7 Precautions ..... 43 - 7

44. CONNECTION TO PANASONIC INDUSTRIAL DEVICES SUNX PLC

44.1 Connectable Model List ..... 44 - 1
44.2 System Configuration ..... 44 - 2
44.2.1 Connecting to FP0-C16CT, FP0-C32CT, or FP0R ..... 44 - 2
44.2.2 Connecting to FP1-C24C or FP1-C40C ..... 44 - 3
44.2.3 Connecting to FP2 or FP2SH ..... 44 - 5

44.2.4 Connecting to FP3 or FP5 ..... 44 - 8
44.2.5 Connecting to FP10(S) ..... 44 - 11
44.2.6 Connecting to FP-M(C20TC) or FP-M(C32TC) ..... 44 - 14
44.2.7 Connecting to FP10SH ..... 44 - 16
44.2.8 Connecting to FPΣ ..... 44 - 18
44.2.9 Connecting to FP-X ..... 44 - 20
44.3 Connection Diagram ..... 44 - 23
44.3.1 RS-232 cable ..... 44 - 23
44.3.2 RS-422 cable ..... 44 - 27
44.4 GOT Side Settings ..... 44 - 29
44.4.1 Setting communication interface (Communication settings) ..... 44 - 29
44.4.2 Communication detail settings ..... 44 - 29
44.5 PLC Side Setting ..... 44 - 30
44.6 Device Range that Can Be Set ..... 44 - 31

45. CONNECTION TO HITACHI IES PLC

45.1 Connectable Model List ..... 45 - 1
45.2 System Configuration ..... 45 - 2
45.2.1 Connection to large-sized H series ..... 45 - 2
45.2.2 Connecting to H-200 to 252 series, H series board type or EH-150 series ..... 45 - 5
45.3 Connection Diagram ..... 45 - 8
45.3.1 RS-232 cable ..... 45 - 8
45.3.2 RS-422 cable ..... 45 - 9
45.4 GOT Side Settings ..... 45 - 11
45.4.1 Setting communication interface (Communication settings) ..... 45 - 11
45.4.2 Communication detail settings ..... 45 - 11
45.5 PLC Side Setting ..... 45 - 13
45.6 Device Range that Can Be Set ..... 45 - 14

46. CONNECTION TO HITACHI PLC

46.1 Connectable Model List ..... 46 - 1
46.2 System Configuration ..... 46 - 2
46.2.1 Connecting to S10V ..... 46 - 2
46.2.2 Connecting to S10mini ..... 46 - 3
46.3 Connection Diagram ..... 46 - 5
46.3.1 RS-232 cable ..... 46 - 5
46.3.2 RS-422 cable ..... 46 - 6
46.4 GOT Side Settings ..... 46 - 7
46.4.1 Setting communication interface (Communication settings) ..... 46 - 7
46.4.2 Communication detail settings ..... 46 - 7
46.5 PLC Side Setting ..... 46 - 8
46.5.1 Connecting to communication module ..... 46 - 8
46.6 Device Range that Can Be Set ..... 46 - 9

47. CONNECTION TO FUJI PLC

47.1 Connectable Model List ..... 47 - 1

47.2 Serial Connection ..... 47 - 2
47.2.1 System Configuration for connecting to MICREX-F55 ..... 47 - 2
47.2.2 System Configuration for connecting to MICREX-F70 ..... 47 - 7
47.2.3 System Configuration for connecting to MICREX-F120S/140S/15[]S ..... 47 - 13
47.2.4 System Configuration for connecting to MICREX-SX SPH ..... 47 - 20
47.2.5 Connection Diagram ..... 47 - 22
47.2.6 GOT Side Settings ..... 47 - 28
47.2.7 PLC Side Setting ..... 47 - 30
47.3 Ethernet Connection ..... 47 - 35
47.3.1 System Configuration for connecting to MICREX-SX SPH ..... 47 - 35
47.3.2 GOT Side Settings ..... 47 - 36
47.3.3 PLC side setting (MICREX-SX SPH) ..... 47 - 38
47.4 Device Range that Can Be Set ..... 47 - 39
47.5 Precautions ..... 47 - 39

48. CONNECTION TO FUJI TEMPERATURE CONTROLLER

48.1 Connectable Model List ..... 48 - 1
48.2 System Configuration ..... 48 - 1
48.2.1 Connecting to PXR3, PXR4, PXR5 or PXR9 ..... 48 - 1
48.2.2 Connecting to PXG4, PXG5, PXG9 or PXH9 ..... 48 - 3
48.3 Connection Diagram ..... 48 - 6
48.3.1 RS-232 cable ..... 48 - 6
48.3.2 RS-485 cable ..... 48 - 8
48.4 GOT Side Settings ..... 48 - 10
48.4.1 Setting communication interface (Communication settings) ..... 48 - 10
48.4.2 Communication detail settings ..... 48 - 10
48.5 Temperature Controller Side Setting ..... 48 - 11
48.5.1 Connecting to PXR3/4/5/9 ..... 48 - 11
48.5.2 Connecting to PXG4/5/9 ..... 48 - 11
48.5.3 Connecting to PXH9 ..... 48 - 11
48.5.4 Connecting to interface converter (RC-77) ..... 48 - 12
48.5.5 Connecting to interface converter (SI-30A) ..... 48 - 12
48.5.6 Connecting to interface converter (KS-485) ..... 48 - 13
48.5.7 Connecting to interface converter (K3SC-10) ..... 48 - 13
48.5.8 Station number setting ..... 48 - 14
48.6 Device Range that Can Be Set ..... 48 - 15
48.7 Precautions ..... 48 - 15

49. CONNECTION TO YASKAWA PLC

49.1 Connectable Model List ..... 49 - 1
49.2 Serial Connection ..... 49 - 2
49.2.1 System configuration for connecting to GL120 or GL130 ..... 49 - 2
49.2.2 System configuration for connecting to GL60S, GL60H or GL70H ..... 49 - 3
49.2.3 System configuration for connecting to MP-920/930, CP-9300MS/9200(H) or PROGIC-8 ..... 49 - 5
49.2.4 System configuration for connecting to MP-940 ..... 49 - 7
49.2.5 System configuration for connecting to CP-9200SH or CP-317 ..... 49 - 9
49.2.6 System configuration for connecting to MP2200, MP2300 or MP2300S ..... 49 - 11
49.2.7 Connection diagram ..... 49 - 13

49.2.8 GOT side settings ..... 49 - 19
49.2.9 PLC side setting ..... 49 - 20
49.3 Ethernet Connection ..... 49 - 23
49.3.1 System configuration for connecting to MP-920 or MP2200 or MP2300 or MP2300S or CP-9200SH or CP-312 or CP-317 ..... 49 - 23
49.3.2 GOT side settings ..... 49 - 24
49.3.3 PLC side setting (MP2000 series, MP920 series) ..... 49 - 25
49.3.4 PLC side setting (CP-9200SH series, CP-312 series) ..... 49 - 30
49.3.5 Precautions ..... 49 - 33
49.4 Device Range that Can Be Set ..... 49 - 33

50. CONNECTION TO YOKOGAWA PLC

50.1 Connectable Model List ..... 50 - 1
50.2 Serial Connection ..... 50 - 2
50.2.1 System configuration for connecting to FA-M3/M3V ..... 50 - 2
50.2.2 System configuration for connecting to FA500 ..... 50 - 7
50.2.3 System configuration for connecting to STARDOM ..... 50 - 8
50.2.4 Connection diagram ..... 50 - 10
50.2.5 GOT side settings ..... 50 - 14
50.2.6 PLC side setting ..... 50 - 15
50.2.7 Connecting to CPU port/D-sub 9-pin conversion cable, SIO port adapter cable ..... 50 - 15
50.2.8 Connecting to PC link module (F3LC01-1N, F3LC11-1N, F3LC11-2N, F3LC11-2F) ..... 50 - 16
50.2.9 Connecting to PC link module (F3LC11-1F, F3LC12-1F) ..... 50 - 17
50.2.10 Connecting to PC link module (LC01-0N, LC02-0N) ..... 50 - 18
50.2.11 Connecting to STARDOM ..... 50 - 19
50.2.12 Precautions ..... 50 - 20
50.3 Ethernet Connection ..... 50 - 21
50.3.1 System configuration for connecting to FA-M3/M3V ..... 50 - 21
50.3.2 GOT side settings ..... 50 - 22
50.3.3 PLC side setting ..... 50 - 23
50.3.4 Connecting to Ethernet interface module (F3LE01-5T, F3LE11-0T) ..... 50 - 23
50.3.5 Connecting to Ethernet interface module (F3LE12-0T) ..... 50 - 24
50.3.6 Connecting to F3SP66, F3SP67, F3SP71-4N (Built-In Ethernet Interface) ..... 50 - 25
50.3.7 Precautions ..... 50 - 25
50.4 Device Range that Can Be Set ..... 50 - 26

51. CONNECTION TO YOKOGAWA TEMPERATURE CONTROLLER

51.1 Connectable Model List ..... 51 - 1
51.2 System Configuration ..... 51 - 2
51.2.1 Connecting to GREEN Series ..... 51 - 2
51.2.2 Connecting to UT100 ..... 51 - 8
51.2.3 Connecting to UT2000 ..... 51 - 10
51.2.4 Connecting to UTAdvanced Series ..... 51 - 13
51.3 Connection Diagram ..... 51 - 18
51.3.1 RS-232 cable ..... 51 - 18
51.3.2 RS-485 cable ..... 51 - 19
51.4 GOT Side Settings ..... 51 - 24
51.4.1 Setting communication interface (Communication settings) ..... 51 - 24
51.4.2 Communication detail settings ..... 51 - 24

51.5 Temperature Controller Side Setting ..... 51 - 25
51.5.1 Connecting to GREEN Series ..... 51 - 25
51.5.2 Connecting to UT100 Series ..... 51 - 25
51.5.3 Connecting to UT2000 Series ..... 51 - 25
51.5.4 Connecting to UTAdvanced Series ..... 51 - 26
51.5.5 Connecting to converter (ML2-□) ..... 51 - 26
51.5.6 Station number setting ..... 51 - 27
51.6 Device Range that Can Be Set ..... 51 - 28
51.7 Precautions ..... 51 - 28

52. CONNECTION TO AZBIL CONTROL EQUIPMENT

52.1 Connectable Model List ..... 52 - 1
52.2 System Configuration ..... 52 - 3
52.2.1 Connecting to DMC10 ..... 52 - 3
52.2.2 Connecting to DMC50 ..... 52 - 4
52.2.3 Connecting to SDC15, SDC25/26 or SDC35/36 ..... 52 - 6
52.2.4 Connecting to SDC20/21 ..... 52 - 8
52.2.5 Connecting to SDC30/31 ..... 52 - 12
52.2.6 Connecting to SDC40A/40B/40G ..... 52 - 15
52.2.7 Connecting to SDC45/46, CMS, MQV, MPC, MVF, RX ..... 52 - 19
52.2.8 Connecting to CMF050, CML, PBC201-VN2, AUR350C, AUR450C, CMC10B ..... 52 - 21
52.2.9 Connecting to AHC2001 ..... 52 - 24
52.2.10 Connecting to NX series ..... 52 - 27
52.3 Connection Diagram ..... 52 - 28
52.3.1 RS-232 cable ..... 52 - 28
52.3.2 RS-485 cable ..... 52 - 30
52.4 GOT Side Settings ..... 52 - 36
52.4.1 Setting communication interface (Communication settings) ..... 52 - 36
52.4.2 Communication detail settings ..... 52 - 36
52.5 Control Equipment Side Setting ..... 52 - 38
52.5.1 Connecting to DMC10 ..... 52 - 38
52.5.2 Connecting to SDC40A/40B/40G ..... 52 - 38
52.5.3 Connecting to SDC15, SDC25/26 or SDC35/36 ..... 52 - 38
52.5.4 Connecting to SDC20/21, SDC30/31 ..... 52 - 39
52.5.5 Connecting to CMC10L ..... 52 - 39
52.5.6 Connecting to DMC50 ..... 52 - 40
52.5.7 Connecting to SDC45/46 ..... 52 - 40
52.5.8 Connecting to CMS, CMF015 ..... 52 - 40
52.5.9 Connecting to CML, CMF050 ..... 52 - 40
52.5.10 Connecting to MQV ..... 52 - 40
52.5.11 Connecting to MPC ..... 52 - 41
52.5.12 Connecting to PBC201-VN2 ..... 52 - 41
52.5.13 Connecting to MVF ..... 52 - 41
52.5.14 Connecting to AUR350C, AUR450C ..... 52 - 42
52.5.15 Connecting to RX ..... 52 - 42
52.5.16 Connecting to CMC10B ..... 52 - 42
52.5.17 Connecting to AHC2001 CPU module ..... 52 - 43
52.5.18 Connecting to AHC2001 SCU module ..... 52 - 43
52.5.19 Station number setting ..... 52 - 43
52.6 Device Range that Can Be Set ..... 52 - 44

52.7 Precautions ..... 52 - 44

53. CONNECTION TO RKC TEMPERATURE CONTROLLER

53.1 Connectable Model List ..... 53 - 1
53.2 System Configuration ..... 53 - 2
53.2.1 Connecting to H-PCP-J ..... 53 - 2
53.2.2 Connecting to H-PCP-A or H-PCP-B ..... 53 - 6
53.2.3 Connecting to SRZ ..... 53 - 9
53.2.4 Connecting to CB Series (CB100, CB400, CB500, CB700, CB900) ..... 53 - 13
53.2.5 Connecting to FB series (FB100, FB400 or FB900) ..... 53 - 15
53.2.6 Connecting to RB Series (RB100, RB400, RB500, RB700, RB900) ..... 53 - 19
53.2.7 Connecting to PF900/901, HA400/401, HA900/901, RMC500, MA900/MA901, AG500, THV-A1, SA100/200 ..... 53 - 21
53.2.8 Connecting to SRX ..... 53 - 26
53.2.9 Connecting to SB series (SB1) ..... 53 - 28
53.2.10 Connecting to B400 ..... 53 - 29
53.3 Connection Diagram ..... 53 - 31
53.3.1 RS-232 cable ..... 53 - 31
53.3.2 RS-422 cable ..... 53 - 34
53.3.3 RS-485 cable ..... 53 - 36
53.4 GOT Side Settings ..... 53 - 37
53.4.1 Setting communication interface (Communication settings) ..... 53 - 37
53.4.2 Communication detail settings ..... 53 - 37
53.5 Temperature Controller Side Setting ..... 53 - 38
53.5.1 Connecting to H-PCP-J ..... 53 - 38
53.5.2 Connecting to H-PCP-A, H-PCP-B ..... 53 - 39
53.5.3 Connecting to Z-TIO, Z-DIO, Z-CT ..... 53 - 40
53.5.4 Connecting to Z-COM ..... 53 - 41
53.5.5 Connecting to CB Series ..... 53 - 42
53.5.6 Connecting to FB Series ..... 53 - 42
53.5.7 Connecting to RB Series ..... 53 - 43
53.5.8 Connecting to PF900 ..... 53 - 43
53.5.9 Connecting to HA400, HA900 ..... 53 - 43
53.5.10 Connecting to AG500 ..... 53 - 43
53.5.11 Connecting to RMC500 ..... 53 - 44
53.5.12 Connecting to MA900, MA901 ..... 53 - 44
53.5.13 Connecting to THV-A1 ..... 53 - 44
53.5.14 Connecting to SA100/SA200 ..... 53 - 44
53.5.15 Connecting to X-TIO Module ..... 53 - 45
53.5.16 Connecting to SB Series ..... 53 - 45
53.5.17 Connecting to B400 ..... 53 - 46
53.5.18 Station number setting ..... 53 - 47
53.6 Device Range that Can Be Set ..... 53 - 48
53.7 Precautions ..... 53 - 48

54. CONNECTION TO ALLEN-BRADLEY PLC

54.1 Connectable Model List ..... 54 - 1
54.2 Serial connection ..... 54 - 2
54.2.1 System configuration for connecting to SLC500 Series ..... 54 - 2

54.2.2 System configuration for connecting to MicroLogix1000/1200/1400/1500 Series ..... 54 - 4
54.2.3 System configuration for connecting to Control/Compact/FlexLogix Series ..... 54 - 6
54.2.4 Connection diagram ..... 54 - 7
54.2.5 GOT side settings ..... 54 - 10
54.2.6 PLC side setting ..... 54 - 11
54.3 Ethernet Connection ..... 54 - 12
54.3.1 System configuration for connecting to ControlLogix or CompactLogix ..... 54 - 12
54.3.2 GOT Side Settings ..... 54 - 14
54.3.3 PLC side setting ..... 54 - 15
54.3.4 Precautions ..... 54 - 16
54.4 Device Range that Can Be Set ..... 54 - 16

55. CONNECTION TO GE PLC

55.1 Connectable Model List ..... 55 - 1
55.2 System Configuration ..... 55 - 2
55.2.1 Connecting to Series90-30 ..... 55 - 2
55.2.2 Connecting to Series90-70 ..... 55 - 8
55.2.3 Connecting to VersaMax Micro ..... 55 - 11
55.3 Connection Diagram ..... 55 - 17
55.3.1 RS-232 cable ..... 55 - 17
55.3.2 RS-422 cable ..... 55 - 19
55.4 GOT Side Settings ..... 55 - 24
55.4.1 Setting communication interface (Communication settings) ..... 55 - 24
55.4.2 Communication detail settings ..... 55 - 24
55.5 PLC Side Setting ..... 55 - 25
55.5.1 Connecting to Series 90-30 ..... 55 - 25
55.5.2 Connecting to VersaMaxMicro ..... 55 - 25
55.5.3 Connecting to IC693CMM311 ..... 55 - 26
55.5.4 Connecting to IC697CMM711 ..... 55 - 26
55.5.5 Station number setting ..... 55 - 26
55.6 Device Range that Can Be Set ..... 55 - 27
55.7 Precautions ..... 55 - 27

56. CONNECTION TO LS INDUSTRIAL SYSTEMS PLC

56.1 Connectable Model List ..... 56 - 1
56.2 System Configuration ..... 56 - 2
56.2.1 Connecting to K80S or K120S ..... 56 - 2
56.2.2 Connecting to K200S ..... 56 - 5
56.2.3 Connecting to K300S ..... 56 - 8
56.3 Connection Diagram ..... 56 - 11
56.3.1 RS-232 cable ..... 56 - 11
56.3.2 RS-422 cable ..... 56 - 12
56.4 GOT Side Settings ..... 56 - 14
56.4.1 Setting communication interface (Communication settings) ..... 56 - 14
56.4.2 Communication detail settings ..... 56 - 14
56.5 PLC Side Setting ..... 56 - 15
56.5.1 Connecting to PLC CPU ..... 56 - 15
56.5.2 Connecting to Cnet I/F module ..... 56 - 15

56.6 Device Range that Can Be Set ..... 56 - 15

57. CONNECTION TO SICK SAFETY CONTROLLER

57.1 Connectable Model List ..... 57 - 1
57.2 System Configuration ..... 57 - 1
57.2.1 Connecting to Flexi Soft ..... 57 - 1
57.3 GOT Side Settings ..... 57 - 2
57.3.1 Setting communication interface (Communication settings) ..... 57 - 2
57.3.2 Communication detail settings ..... 57 - 2
57.4 PLC Side Setting ..... 57 - 3
57.4.1 Connecting to Flexi Soft ..... 57 - 3
57.5 Device Range that Can Be Set ..... 57 - 3

58. CONNECTION TO SIEMENS PLC

58.1 Connectable Model List ..... 58 - 1
58.2 Serial Connection ..... 58 - 1
58.2.1 System configuration for connecting to SIMATIC S7-300/400 series ..... 58 - 1
58.2.2 System configuration for connecting to SIMATIC S7-200 ..... 58 - 4
58.2.3 Connection diagram ..... 58 - 5
58.2.4 GOT side settings ..... 58 - 6
58.2.5 PLC side setting ..... 58 - 7
58.2.6 Precautions ..... 58 - 8
58.3 Ethernet Connection ..... 58 - 9
58.3.1 System configuration for connecting to SIMATIC S7-300/400 series (Ethernet connection type: FETCH/WRITE) ..... 58 - 9
58.3.2 System configuration for connecting to SIMATIC S7-200/300/400/1200 (Ethernet connection type: OP communication) ..... 58 - 10
58.3.3 GOT side settings ..... 58 - 12
58.3.4 PLC side setting ..... 58 - 14
58.3.5 Precautions ..... 58 - 15
58.4 Device Range that Can Be Set ..... 58 - 15

59. CONNECTION TO HIRATA CORPORATION HNC CONTROLLER

60. CONNECTION TO MURATEC CONTROLLER

MICROCOMPUTER CONNECTION

61. MICROCOMPUTER CONNECTION (SERIAL)

61.1 Microcomputer Connection (Serial) ..... 61 - 1
61.2 System Configuration ..... 61 - 3
61.2.1 For the microcomputer connection (serial) ..... 61 - 3
61.3 Connection Diagram ..... 61 - 5
61.3.1 RS-232 cable ..... 61 - 5
61.3.2 RS-422 cable ..... 61 - 6
61.4 Device Data Area ..... 61 - 7
61.4.1 D devices ..... 61 - 8
61.4.2 R devices ..... 61 - 11
61.4.3 L devices ..... 61 - 12

61.4.4 M devices ..... 61 - 12
61.4.5 SD devices ..... 61 - 13
61.4.6 SM devices ..... 61 - 16
61.5 Message Formats ..... 61 - 18
61.5.1 Data format type and application ..... 61 - 18
61.5.2 List of commands ..... 61 - 19
61.5.3 Formats 1, 2 (GOT-A900 Series microcomputer connection) ..... 61 - 22
61.5.4 Formats 3 to 6 (A compatible 1C frame) ..... 61 - 34
61.5.5 Formats 7 to 10 (QnA compatible 3C/4C frame) ..... 61 - 39
61.5.6 Formats 11 to 13 (Digital Electronics Corporation's memory link method) ..... 61 - 45
61.5.7 Formats 14, 15 (GOT-F900 Series microcomputer connection) ..... 61 - 54
61.6 GOT Side Settings ..... 61 - 67
61.6.1 Setting communication interface (Communication settings) ..... 61 - 67
61.6.2 Communication detail settings ..... 61 - 67
61.7 System Configuration Examples ..... 61 - 69
61.8 Device Range that Can Be Set ..... 61 - 72
61.9 Precautions ..... 61 - 72

62. MICROCOMPUTER CONNECTION (ETHERNET)

62.1 Microcomputer Connection (Ethernet) ..... 62 - 1
62.2 System Configuration ..... 62 - 1
62.2.1 For the microcomputer connection (Ethernet) ..... 62 - 1
62.3 Device Data Area ..... 62 - 2
62.3.1 D devices ..... 62 - 3
62.3.2 R devices ..... 62 - 6
62.3.3 L devices ..... 62 - 7
62.3.4 M devices ..... 62 - 7
62.3.5 SD devices ..... 62 - 8
62.3.6 SM devices ..... 62 - 11
62.4 Message Formats ..... 62 - 13
62.4.1 Data format type and application ..... 62 - 13
62.4.2 List of commands ..... 62 - 14
62.4.3 Formats 1, 2 (GOT-A900 Series microcomputer connection) ..... 62 - 16
62.4.4 Formats 3, 4 (GOT-F900 series microcomputer connection) ..... 62 - 28
62.4.5 Format 5 (Digital Electronics Corporation's memory link method) ..... 62 - 42
62.4.6 Formats 6, 7 (4E frame) ..... 62 - 46
62.4.7 Formats 8, 9 (3E frame) ..... 62 - 56
62.5 GOT Side Settings ..... 62 - 66
62.5.1 Setting communication interface (Communication settings) ..... 62 - 66
62.5.2 Communication detail settings ..... 62 - 66
62.6 System Configuration Examples ..... 62 - 68
62.7 Device Range that Can Be Set ..... 62 - 68
62.8 Precautions ..... 62 - 68

MODBUS CONNECTIONS

63. MODBUS(R)/RTU CONNECTION

63.1 Connectable Model List ..... 63 - 1

63.2 System Configuration ..... 63 - 1
63.2.1 Connecting to MODBUS equipment ..... 63 - 1
63.3 Connection Diagram ..... 63 - 3
63.3.1 RS-232 cable ..... 63 - 3
63.3.2 RS-422/485 cable ..... 63 - 4
63.4 GOT Side Settings ..... 63 - 6
63.4.1 Setting communication interface (Communication settings) ..... 63 - 6
63.4.2 Communication detail settings ..... 63 - 6
63.5 MODBUS/RTU Equipment Side Setting ..... 63 - 7
63.5.1 Communication settings ..... 63 - 7
63.5.2 Station number setting ..... 63 - 9
63.6 Precautions ..... 63 - 10

64. MODBUS(R)/TCP CONNECTION

64.1 Connectable Model List ..... 64 - 1
64.2 System Configuration ..... 64 - 1
64.2.1 Connecting to MODBUS/TCP equipment ..... 64 - 1
64.3 GOT Side Settings ..... 64 - 2
64.3.1 Setting communication interface (Communication settings) ..... 64 - 2
64.3.2 Communication detail settings ..... 64 - 2
64.3.3 Ethernet setting ..... 64 - 3
64.4 PLC side setting ..... 64 - 3
64.5 Device Range that Can Be Set ..... 64 - 4
64.6 Example of Connection ..... 64 - 5
64.6.1 Connecting to SCHNEIDER PLC (Modicon Premium series and Modicon Quantum series) ..... 64 - 5
64.6.2 Connecting to YOKOGAWA PLC (STARDOM) ..... 64 - 7
64.7 Precautions ..... 64 - 10

CONNECTIONS TO PERIPHERAL EQUIPMENT

65. VNC(R) SERVER CONNECTION

65.1 Connectable Model List ..... 65 - 1
65.2 System Configuration ..... 65 - 1
65.3 GOT Side Settings ..... 65 - 2
65.3.1 VNC(R) server function setting ..... 65 - 2
65.3.2 Setting communication interface (Communication settings) ..... 65 - 2
65.4 Personal Computer Side Setting ..... 65 - 3

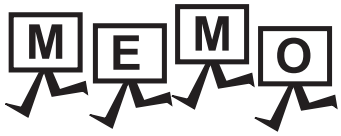
MEMO

MANUALS

The following table lists the manual relevant to this product.
Refer to each manual for any purpose.

Manual Name	Delivery method	Manual Number
GT Works3 Version1 Installation Procedure Manual	Enclosed in product	-
GT Designer3 Version1 Screen Design Manual (Fundamentals) 1/2, 2/2	*1	SH-080866ENG
GT Designer3 Version1 Screen Design Manual (Functions) 1/2, 2/2	*1	SH-080867ENG
GOT1000 Series Connection Manual (Mitsubishi Products) for GT Works3	*1	SH-080868ENG
GOT1000 Series Connection Manual (Non-Mitsubishi Products 1) for GT Works3	*1	SH-080869ENG
GOT1000 Series Connection Manual (Non-Mitsubishi Products 2) for GT Works3	*1	SH-080870ENG
GOT1000 Series Connection Manual (Microcomputer, MODBUS Products, Peripherals) for GT Works3	*1	SH-080871ENG
GOT1000 Series Connection Manual (α2 Connection) for GT Works3	*1	JY997D39201
GT Simulator3 Version1 Operating Manual for GT Works3	*1	SH-080861ENG
GOT1000 Series User's Manual (Extended Functions, Option Functions) for GT Works3	*1	SH-080863ENG

*1 Contact your local distributor.

QUICK REFERENCE

■ Creating a project

Obtaining the specifications and operation methods of GT Designer3	GT Designer3 Version1 Screen Design Manual (Fundamentals) 1/2, 2/2
Setting available functions on GT Designer3	
Creating a screen displayed on the GOT	
Obtaining useful functions to increase efficiency of drawing	
Setting details for figures and objects	GT Designer3 Version1 Screen Design Manual (Functions) 1/2, 2/2
Setting functions for the data collection or trigger action	
Setting functions to use peripheral devices	
Simulating a created project on a personal computer	GT Simulator3 Version1 Operating Manual for GT Works3

■ Transferring data to the GOT

Writing data to the GOT	GT Designer3 Version1 Screen Design Manual (Fundamentals) 1/2, 2/2
Reading data from the GOT	
Verifying a editing project to a GOT project	

■ Others

Configuring the extended function and option function	GOT1000 Series User's Manual (Extended Functions, Option Functions) for GT Works3

■ GOT

Abbreviations and generic terms			Description
GOT1000 Series	GT1695	GT1695M-X	Abbreviation of GT1695M-XTBA, GT1695M-XTBD
	GT1685	GT1685M-S	Abbreviation of GT1685M-STBA, GT1685M-STBD
	GT1675	GT1675M-S	Abbreviation of GT1675M-STBA, GT1675M-STBD
		GT1675M-V	Abbreviation of GT1675M-VTBA, GT1675M-VTBD
		GT1675-VN	Abbreviation of GT1675-VNBA, GT1675-VNBD
	GT1672	GT1672-VN	Abbreviation of GT1672-VNBA, GT1672-VNBD
	GT1665	GT1665M-S	Abbreviation of GT1665M-STBA, GT1665M-STBD
		GT1665M-V	Abbreviation of GT1665M-VTBA, GT1665M-VTBD
	GT1662	GT1662-VN	Abbreviation of GT1662-VNBA, GT1662-VNBD
	GT1655	GT1655-V	Abbreviation of GT1655-VTBD
	GT16		Abbreviation of GT1695, GT1685, GT1675, GT1672, GT1665, GT1662, GT1655, GT16 Handy GOT
	GT1595	GT1595-X	Abbreviation of GT1595-XTBA, GT1595-XTBD
	GT1585	GT1585V-S	Abbreviation of GT1585V-STBA, GT1585V-STBD
		GT1585-S	Abbreviation of GT1585-STBA, GT1585-STBD
	GT157□	GT1575V-S	Abbreviation of GT1575V-STBA, GT1575V-STBD
		GT1575-S	Abbreviation of GT1575-STBA, GT1575-STBD
		GT1575-V	Abbreviation of GT1575-VTBA, GT1575-VTBD
		GT1575-VN	Abbreviation of GT1575-VNBA, GT1575-VNBD
		GT1572-VN	Abbreviation of GT1572-VNBA, GT1572-VNBD
	GT156□	GT1565-V	Abbreviation of GT1565-VTBA, GT1565-VTBD
		GT1562-VN	Abbreviation of GT1562-VNBA, GT1562-VNBD
	GT155□	GT1555-V	Abbreviation of GT1555-VTBD
		GT1555-Q	Abbreviation of GT1555-QTBD, GT1555-QSBD
		GT1550-Q	Abbreviation of GT1550-QLBD
	GT15		Abbreviation of GT1595, GT1585, GT157□, GT156□, GT155□
	GT145□	GT1455-Q	Abbreviation of GT1455-QTBDE, GT1455-QTBD
		GT1450-Q	Abbreviation of GT1450-QMBDE, GT1450-QMBD, GT1450-QLBDE, GT1450-QLBD
	GT14		Abbreviation of GT1455-Q, GT1450-Q
	GT1275	GT1275-V	Abbreviation of GT1275-VNBA, GT1275-VNBD
	GT1265	GT1265-V	Abbreviation of GT1265-VNBA, GT1265-VNBD
	GT12		Abbreviation of GT1275, GT1265
	GT115□	GT1155-Q	Abbreviation of GT1155-QTBDQ, GT1155-QSBDQ, GT1155-QTBDA, GT1155-QSBDA, GT1155-QTBD, GT1155-QSBD
		GT1150-Q	Abbreviation of GT1150-QLBDQ, GT1150-QLBDA, GT1150-QLBD
	GT11		Abbreviation of GT115□, GT11 Handy GOT,
	GT105□	GT1055-Q	Abbreviation of GT1055-QSBD
		GT1050-Q	Abbreviation of GT1050-QBBD
	GT104□	GT1045-Q	Abbreviation of GT1045-QSBD
		GT1040-Q	Abbreviation of GT1040-QBBD
	GT1030		Abbreviation of GT1030-LBD, GT1030-LBD2, GT1030-LBL, GT1030-LBDW, GT1030-LBDW2, GT1030-LBLW, GT1030-LWD, GT1030-LWD2, GT1030-LWL, GT1030-LWDW, GT1030-LWDW2, GT1030-LWLW, GT1030-HBD, GT1030-HBD2, GT1030-HBL, GT1030-HBDW, GT1030-HBDW2, GT1030-HBLW, GT1030-HWD, GT1030-HWD2, GT1030-HWL, GT1030-HWDW, GT1030-HWDW2, GT1030-HWLW
	GT1020		Abbreviation of GT1020-LBD, GT1020-LBD2, GT1020-LBL, GT1020-LBDW, GT1020-LBDW2, GT1020-LBLW, GT1020-LWD, GT1020LWD2, GT1020-LWL, GT1020-LWDW, GT1020-LWDW2, GT1020-LWLW
	GT10		Abbreviation of GT105□, GT104□, GT1030, GT1020

Abbreviations and generic terms				Description
GOT1000 Series	Handy GOT	GT16 Handy GOT	GT1665HS-V	Abbreviation of GT1665HS-VTBD
		GT11 Handy GOT	GT1155HS-Q	Abbreviation of GT1155HS-QSBD
			GT1150HS-Q	Abbreviation of GT1150HS-QLBD
	GT SoftGOT1000			Abbreviation of GT SoftGOT1000
GOT900 Series				Abbreviation of GOT-A900 series, GOT-F900 series
GOT800 Series				Abbreviation of GOT-800 series

■ Communication unit

Abbreviations and generic terms	Description
Bus connection unit	GT15-QBUS, GT15-QBUS2, GT15-ABUS, GT15-ABUS2, GT15-75QBUSL, GT15-75QBUS2L, GT15-75ABUSL, GT15-75ABUS2L
Serial communication unit	GT15-RS2-9P, GT15-RS4-9S, GT15-RS4-TE
RS-422 conversion unit	GT15-RS2T4-9P, GT15-RS2T4-25P
Ethernet communication unit	GT15-J71E71-100
MELSECNET/H communication unit	GT15-J71LP23-25, GT15-J71BR13
MELSECNET/10 communication unit	GT15-75J71LP23-Z[*1], GT15-75J71BR13-Z[*2]
CC-Link IE Controller Network communication unit	GT15-J71GP23-SX
CC-Link IE Field Network communication unit	GT15-J71GF13-T2
CC-Link communication unit	GT15-J61BT13, GT15-75J61BT13-Z[*3]
Interface converter unit	GT15-75IF900
Serial multi-drop connection unit	GT01-RS4-M
Connection Conversion Adapter	GT10-9PT5S
RS-232/485 signal conversion adapter	GT14-RS2T4-9P

*1 A9GT-QJ71LP23 + GT15-75IF900 set
*2 A9GT-QJ71BR13 + GT15-75IF900 set
*3 A8GT-J61BT13 + GT15-75IF900 set

■ Option unit

Abbreviations and generic terms		Description
Printer unit		GT15-PRN
Video/RGB unit	Video input unit	GT16M-V4, GT15V-75V4
	RGB input unit	GT16M-R2, GT15V-75R1
	Video/RGB input unit	GT16M-V4R1, GT15V-75V4R1
	RGB output unit	GT16M-ROUT, GT15V-75ROUT
Multimedia unit		GT16M-MMR
CF card unit		GT15-CFCD
CF card extension unit[*1]		GT15-CFEX-C08SET
External I/O unit		GT15-DIO, GT15-DIOR
Sound output unit		GT15-SOUT

*1 GT15-CFEX + GT15-CFEXIF + GT15-C08CF set.

■ Option

Abbreviations and generic terms		Description	
Memory card	CF card	GT05-MEM-16MC, GT05-MEM-32MC, GT05-MEM-64MC, GT05-MEM-128MC, GT05-MEM-256MC, GT05-MEM-512MC, GT05-MEM-1GC, GT05-MEM-2GC, GT05-MEM-4GC, GT05-MEM-8GC, GT05-MEM-16GC	
	SD card	NZ1MEM-2GBSD, NZ1MEM-4GBSD, NZ1MEM-8GBSD, NZ1MEM-16GBSD, L1MEM-2GBSD, L1MEM-4GBSD	
Memory card adaptor		GT05-MEM-ADPC	
Option function board		GT16-MESB, GT15-FNB, GT15-QFNB, GT15-QFNB16M, GT15-QFNB32M, GT15-QFNB48M, GT11-50FNB, GT15-MESB48M	
Battery		GT15-BAT, GT11-50BAT	
Protective Sheet		For GT16	GT16-90PSCB, GT16-90PSGB, GT16-90PSCW, GT16-90PSGW, GT16-80PSCB, GT16-80PSGB, GT16-80PSCW, GT16-80PSGW, GT16-70PSCB, GT16-70PSGB, GT16-70PSCW, GT16-70PSGW, GT16-60PSCB, GT16-60PSGB, GT16-60PSCW, GT16-60PSGW, GT16-50PSCB, GT16-50PSGB, GT16-50PSCW, GT16-50PSGW, GT16-90PSCB-012, GT16-80PSCB-012, GT16-70PSCB-012, GT16-60PSCB-012, GT16-50PSCB-012, GT16H-60PSC
		For GT15	GT15-90PSCB, GT15-90PSGB, GT15-90PSCW, GT15-90PSGW, GT15-80PSCB, GT15-80PSGB, GT15-80PSCW, GT15-80PSGW, GT15-70PSCB, GT15-70PSGB, GT15-70PSCW, GT15-70PSGW, GT15-60PSCB, GT15-60PSGB, GT15-60PSCW, GT15-60PSGW, GT15-50PSCB, GT15-50PSGB, GT15-50PSCW, GT15-50PSGW
		For GT14	GT14-50PSCB, GT14-50PSGB, GT14-50PSCW, GT14-50PSGW
		For GT12	GT11-70PSCB, GT11-65PSCB
		For GT11	GT11-50PSCB, GT11-50PSGB, GT11-50PSCW, GT11-50PSGW, GT11H-50PSC
		For GT10	GT10-50PSCB, GT10-50PSGB, GT10-50PSCW, GT10-50PSGW, GT10-40PSCB, GT10-40PSGB, GT10-40PSCW, GT10-40PSGW, GT10-30PSCB, GT10-30PSGB, GT10-30PSCW, GT10-30PSGW, GT10-20PSCB, GT10-20PSGB, GT10-20PSCW, GT10-20PSGW
Protective cover for oil		GT05-90PCO, GT05-80PCO, GT05-70PCO, GT05-60PCO, GT05-50PCO, GT16-50PCO, GT10-40PCO, GT10-30PCO, GT10-20PCO	
USB environmental protection cover		GT16-UCOV, GT16-50UCOV, GT15-UCOV, GT14-50UCOV, GT11-50UCOV	
Stand		GT15-90STAND, GT15-80STAND, GT15-70STAND, A9GT-50STAND, GT05-50STAND	
Attachment		GT15-70ATT-98, GT15-70ATT-87, GT15-60ATT-97, GT15-60ATT-96, GT15-60ATT-87, GT15-60ATT-77, GT15-50ATT-95W, GT15-50ATT-85	
Backlight		GT16-90XLTT, GT16-80SLTT, GT16-70SLTT, GT16-70VLTT, GT16-70VLTTA, GT16-70VLTN, GT16-60SLTT, GT16-60VLTT, GT16-60VLTN, GT15-90XLTT, GT15-80SLTT, GT15-70SLTT, GT15-70VLTT, GT15-70VLTN, GT15-60VLTT, GT15-60VLTN	
Multi-color display board		GT15-XHNB, GT15-VHNB	
Connector conversion box		GT11H-CNB-37S, GT16H-CNB-42S, GT16H-CNB-37S	
Emergency stop sw guard cover		GT11H-50ESCOV, GT16H-60ESCOV	
With wall-mounting Attachment		GT14H-50ATT	
Memory loader		GT10-LDR	
Memory board		GT10-50FMB	
Panel-mounted USB port extension		GT14-C10EXUSB-4S, GT10-C10EXUSB-5S	

■ Software

Abbreviations and generic terms		Description
GT Works3		Abbreviation of the SW□DNC-GTWK3-E and SW□DNC-GTWK3-EA
GT Designer3		Abbreviation of screen drawing software GT Designer3 for GOT1000 series
GT Simulator3		Abbreviation of screen simulator GT Simulator3 for GOT1000/GOT900 series
GT SoftGOT1000		Abbreviation of monitoring software GT SoftGOT1000
GT Converter2		Abbreviation of data conversion software GT Converter2 for GOT1000/GOT900 series
GT Designer2 Classic		Abbreviation of screen drawing software GT Designer2 Classic for GOT900 series
GT Designer2		Abbreviation of screen drawing software GT Designer2 for GOT1000/GOT900 series
iQ Works		Abbreviation of iQ Platform compatible engineering environment MELSOFT iQ Works
MELSOFT Navigator		Generic term for integrated development environment software included in the SW□DNC-IQWK (iQ Platform compatible engineering environment MELSOFT iQ Works)
GX Works2		Abbreviation of SW□DNC-GXW2-E and SW□DNC-GXW2-EA type programmable controller engineering software
Controller simulator	GX Simulator3	Abbreviation of GX Works3 with the simulation function
	GX Simulator2	Abbreviation of GX Works2 with the simulation function
	GX Simulator	Abbreviation of SW D5C-LLT-E(-EV) type ladder logic test tool function software packages (SW5D5C-LLT(-EV) or later versions)
GX Developer		Abbreviation of SW□D5C-GPPW-E(-EV)/SW D5F-GPPW-E type software package
GX LogViewer		Abbreviation of SW□DNN-VIEWER-E type software package
PX Developer		Abbreviation of SW□D5C-FBDQ-E type FBD software package for process control
MT Works2		Abbreviation of motion controller engineering environment MELSOFT MT Works2 (SW□DNC-MTW2-E)
MT Developer		Abbreviation of SW□RNC-GSV type integrated start-up support software for motion controller Q series
MR Configurator2		Abbreviation of SW□DNC-MRC2-E type Servo Configuration Software
MR Configurator		Abbreviation of MRZJW□-SETUP□E type Servo Configuration Software
FR Configurator		Abbreviation of Inverter Setup Software (FR-SW□-SETUP-WE)
NC Configurator		Abbreviation of CNC parameter setting support tool NC Configurator
FX Configurator-FP		Abbreviation of parameter setting, monitoring, and testing software packages for FX3U-20SSC-H (SW□D5C-FXSSC-E)
FX3U-ENET-L Configuration tool		Abbreviation of FX3U-ENET-L type Ethernet module setting software (SW1D5-FXENETL-E)
RT ToolBox2		Abbreviation of robot program creation software (3D-11C-WINE)
MX Component		Abbreviation of MX Component Version□ (SW□D5C-ACT-E, SW□D5C-ACT-EA)
MX Sheet		Abbreviation of MX Sheet Version□ (SW□D5C-SHEET-E, SW□D5C-SHEET-EA)
CPU Module Logging Configuration Tool		Abbreviation of CPU Module Logging Configuration Tool (SW1DNN-LLUTL-E)

■ License key (for GT SoftGOT1000)

Abbreviations and generic terms	Description
License	GT15-SGTKEY-U, GT15-SGTKEY-P

■ Others

Abbreviations and generic terms	Description
IAI	Abbreviation of IAI Corporation
AZBIL	Abbreviation of Azbil Corporation (former Yamatake Corporation)
OMRON	Abbreviation of OMRON Corporation
KEYENCE	Abbreviation of KEYENCE CORPORATION
KOYO EI	Abbreviation of KOYO ELECTRONICS INDUSTRIES CO., LTD.
SHARP	Abbreviation of Sharp Manufacturing Systems Corporation
JTEKT	Abbreviation of JTEKT Corporation
SHINKO	Abbreviation of Shinko Technos Co., Ltd.
CHINO	Abbreviation of CHINO CORPORATION
TOSHIBA	Abbreviation of TOSHIBA CORPORATION
TOSHIBA MACHINE	Abbreviation of TOSHIBA MACHINE CO., LTD.
HITACHI IES	Abbreviation of Hitachi Industrial Equipment Systems Co., Ltd.
HITACHI	Abbreviation of Hitachi, Ltd.
FUJI FA	Abbreviation of Fuji Electric FA Components & Systems Co., Ltd.
PANASONIC	Abbreviation of Panasonic Corporation
FUJI SYS	Abbreviation of Fuji Electric Systems Co., Ltd.
YASKAWA	Abbreviation of YASKAWA Electric Corporation
YOKOGAWA	Abbreviation of Yokogawa Electric Corporation
ALLEN-BRADLEY	Abbreviation of Allen-Bradley products manufactured by Rockwell Automation, Inc.
GE FANUC	Abbreviation of GE Fanuc Automation Corporation GE Fanuc Automation Corporation
LS IS	Abbreviation of LS Industrial Systems Co., Ltd.
SCHNEIDER	Abbreviation of Schneider Electric SA
SICK	Abbreviation of SICK AG
SIEMENS	Abbreviation of Siemens AG
RKC	Abbreviation of RKC INSTRUMENT INC.
HIRATA	Abbreviation of Hirata Corporation
MURATEC	Abbreviation of Muratec products manufactured by Muratec Automation Co., Ltd.
PLC	Abbreviation of programmable controller
Temperature controller	Generic term for temperature controller manufactured by each corporation
Indicating controller	Generic term for indicating controller manufactured by each corporation
Control equipment	Generic term for control equipment manufactured by each corporation
CHINO controller	Abbreviation of indicating controller manufactured by CHINO CORPORATION
PC CPU module	Abbreviation of PC CPU Unit manufactured by CONTEC CO., LTD
GOT (server)	Abbreviation of GOTs that use the server function
GOT (client)	Abbreviation of GOTs that use the client function
Windows® font	Abbreviation of TrueType font and OpenType font available for Windows® (Differs from the True Type fonts settable with GT Designer3)
Intelligent function module	Indicates the modules other than the PLC CPU, power supply module and I/O module that are mounted to the base unit
MODBUS® /RTU	Generic term for the protocol designed to use MODBUS® protocol messages on a serial communication
MODBUS® /TCP	Generic term for the protocol designed to use MODBUS® protocol messages on a TCP/IP network

■ Symbols

Following symbols are used in this manual.

Following GOT is shown.

GT14 Handy Shows GT14 Handy.

PLC			Connection cable	Connector conversion box	External cable	GOT model	Total distance	Number of connectable Model name equipment
Model name	RS-422 connector conversion Cable	Communication type	Cable model					
MELSEC-Q	-	RS-232	GT11-C30R2-6P(3m)	GT11H-CNB-37S	GT11H-C30-37P(3m) GT11H-C60-37P(6m) GT11H-C100-37P(10m)	GT14 Handy	6m	1 GOT for 1 computer link module
	FA-CNV2402CBL(0.2m) FA-CNV2405CBL(0.5m)	RS-422	GT01-C30R4-25P(3m) GT01-C100R4-25P(10m)			GT14 Handy	13m	

5.3 GOT Side Settings

5.3.1 Setting communicationinterface (Communication settings)

Set the channel of the connected equipment.

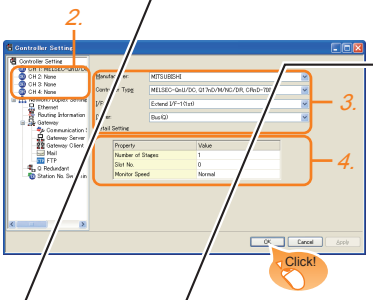

1. Select [Common] → [Controller Setting] from the menu.

2. The Controller Setting window is displayed. Select the channel to be used from the list menu.

3. Set the following items.
   - Manufacturer: Mitsubishi
   - Controller Type: Set the option according to the Controller Type to be connected.
   - I/F: Interface to be used
   - Driver: Set either of the following option according to the Controller Type to be connected.
     - BUS (Q)
     - BUS (A/QnA)

4. The detailed setting is displayed after Manufacturer, Controller Type, I/F, and Driver are set.
   Make the settings according to the usage environment.
   ☞ 5.3.2 Communication detail settings

Click the OK button when settings are completed.

5.3.2 Communication detail settings

(1) Bus (Q)

Property	Value
Number of Stages	1
Slot No.	0
Monitor Speed	Normal

Item	Description	Range
Number of stages	(Default: 1)	1 to 7
Slot No.	(Default: 0)	0 to 9
Monitor speed	(Default: Normal)	High/Normal/Low

(2) Bus (A/QnA)

Property	Value
Number of Stages	1
Slot No.	0

Item	Description	Range
Number of stages	(Default: 1)	1 to 7
Slot No.	(Default: 0)	0 to 7

POINT

(1) Communication interface setting by Utility
The communication interface setting can be changed on the Utility's [Communication Settings] after writing [Communication Settings] of project data.
For details on the Utility, refer to the following manual.
☞ GT□ User's Manual

(2) Precedence in communication settings
When settings are made by GT Designer3 or the Utility, the latest setting is effective.

(3) When changing Stage No. and Slot No.
Change these settings with the PLC CPU turned OFF, and then reapply the power to the PLC CPU and GOT.
Failure to do so may generate a system alarm (No.487).

1. → *2.* → *3.* …
Indicates the operation steps.

[ ] : Indicates the setting items displayed on the software and GOT screen.

POINT Refers to the information required.

HINT Refers to information useful for operation.

Indicates the location of related content.

Since the above page was created for explanation purpose, it differs from the actual page.

■ About system configuration

The following describes the system configuration of each connection included in this manual.

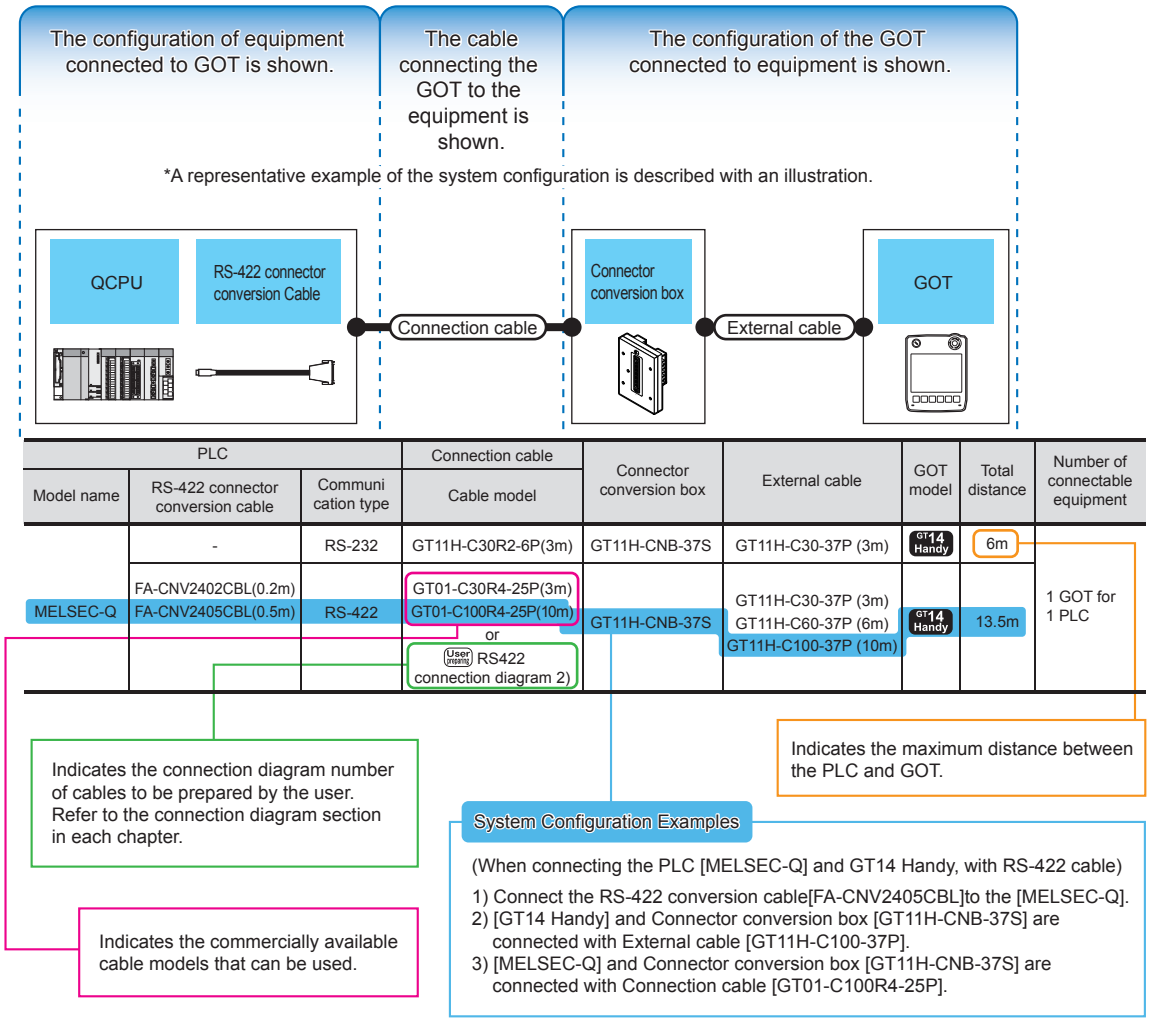

Since the above page was created for explanation purpose, it differs from the actual page.

1. OVERVIEW

■ Handy GOT

The Handy GOT (hereinafter abbreviated as GOT) is used as an operation terminal in connection with the controllers such as MELSEC-FX, Q series or third party PLCs.
It is an all-in-one operation terminal that is equipped with the display unit with touch switches integrated with the mechanical keys (operation switches) for inputting a command to a machine.

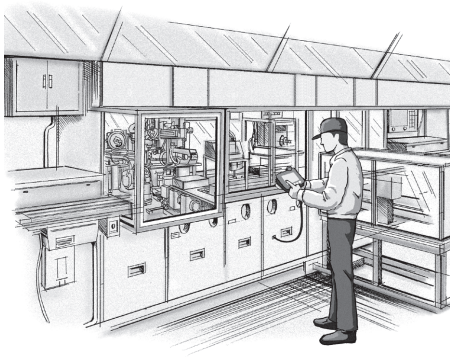

For the display screen, two kinds of display screens are available: user screen and utility screen.

(1) User Screen

The user screen is a screen created by drawing software.
The objects such as "Touch switch", "Lamp display", "Comment display" and "Numerical display" can be arbitrarily placed on the display.
Moreover, multiple screens created by drawing software can be displayed individually or overlapped with each other.

For details, refer to the following.

☞ GT Designer3 Version1 Screen Design Manual

(2) Utility Screen

The utility screen is a factory drawn horizontal screen that cannot be edited.
The utility screen is displayed by installing the Standard monitor OS in the GOT from drawing software, SD card, or USB memory.
The utility screen has display and setting screens for "Brightness", "Memory check", etc.

For details, refer to the following.

☞ 10. to 20.

1.1 Features

■ Display unit

The TFT color LCD with high intensity, wide viewing angle and high definition is adopted as the display unit.
Monitoring for turning ON/OFF bit devices of a PLC, forced turning ON/OFF the bit devices of a PLC, monitoring the word device set value/current value and changing that numeric values are easily made.

(1) The display unit is used for engineers' stage replacement, setting change and troubleshooting or for operation guidance to an operator.
- Monitor
- Forced turning ON/OFF
- Set value change
- Trouble check

(2) Improved monitoring performance and connectivity to FA devices
- Multiple languages are displayed using the Unicode2.1-compatible fonts and beautiful characters are drawn using the TrueType and high quality fonts.
- Two types of display modes are provided: 65536-color display and monochrome display.
- A fine and beautiful full-color display which shows even small characters clearly, is enabled in the 65536-color display by adopting the high intensity, wide viewing angle and high definition TFT color liquid crystal display. (Also compatible with digital screen displays with 65536 colors, BMP, etc.)
- In the monochrome display, 16 scales are used to improve the display.
- High speed monitoring through high speed communication at maximum of 115.2kbps.
- High speed display and high speed touch switch response.
- The operation performance is improved by the analog touch panel.

(3) More efficient GOT operations including screen design, startup, adjustment, management and maintenance works
- The 9MB built-in flash memory is included as standard.
- SD card interface is included as standard.
- RS-232 interface is included as standard.
- RS-422 interface is included as standard.
- USB interface (host/device) is included as standard.
- Ethernet interface is included as standard.
- System font types are increased by the adoption of the font installation system.
- Four types of alarms (system alarm, user alarm, alarm history and alarm popup display) are integrated, and realizing an efficient alarm notification.

(4) Enhanced support of FA device setup tools
- Transferring or monitoring the sequence programs using the personal computer connected to GOT is available, during connection to A, QnA, L, Q, or FX series PLC CPU (FA Transparent function).

■ Operation switch

The operation switches are the mechanical keys directly connected to the input of a PLC.
The switch can be used for the inputs that require a quick response to machine such as run or stop since a command is directly given to the PLC.
The operation switches are used as keys for operator to provide operation commands to the machine.
- Start/Stop
- Stage replacement
- Trouble removal
- Mode selection such as automatic or individual

■ Connection cable

A optional connection cable is required to connect the GOT to a PLC.

1.1.1 Rough procedure

The outline procedures before operating GOT and the descriptions of each item are shown below.

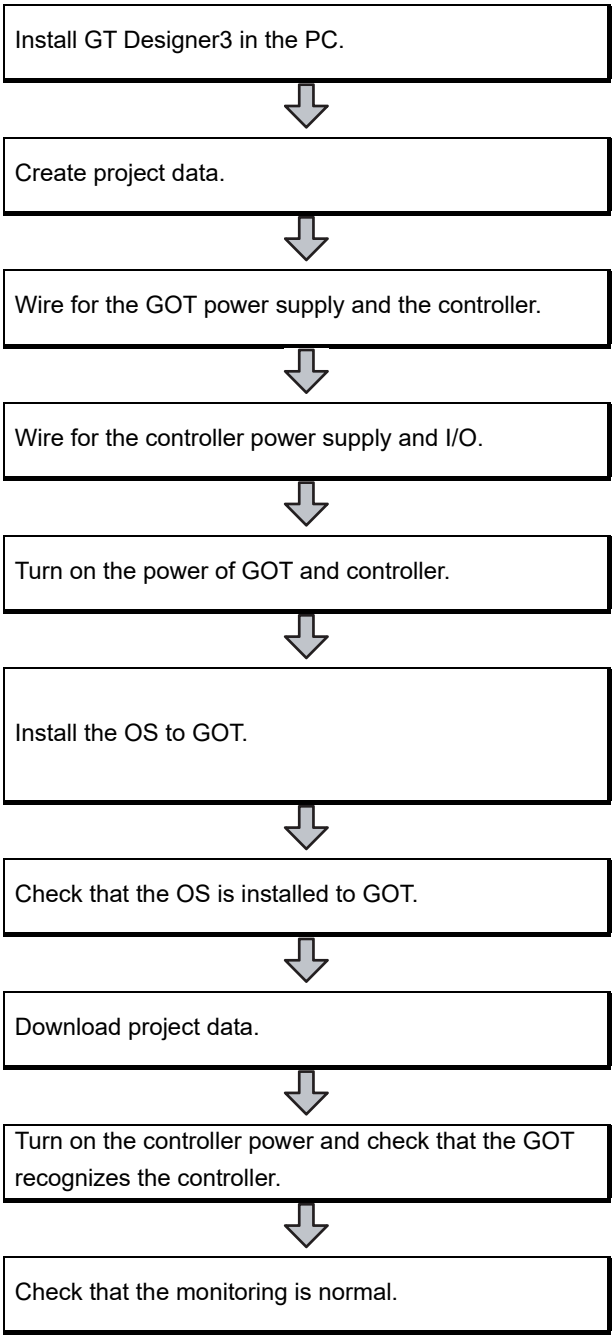

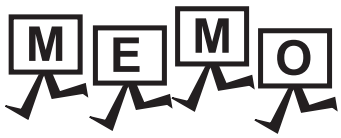
MEMO

2. SYSTEM CONFIGURATION

2.1 Overall Configuration

The overall configuration of GT14 Handy is as follows.

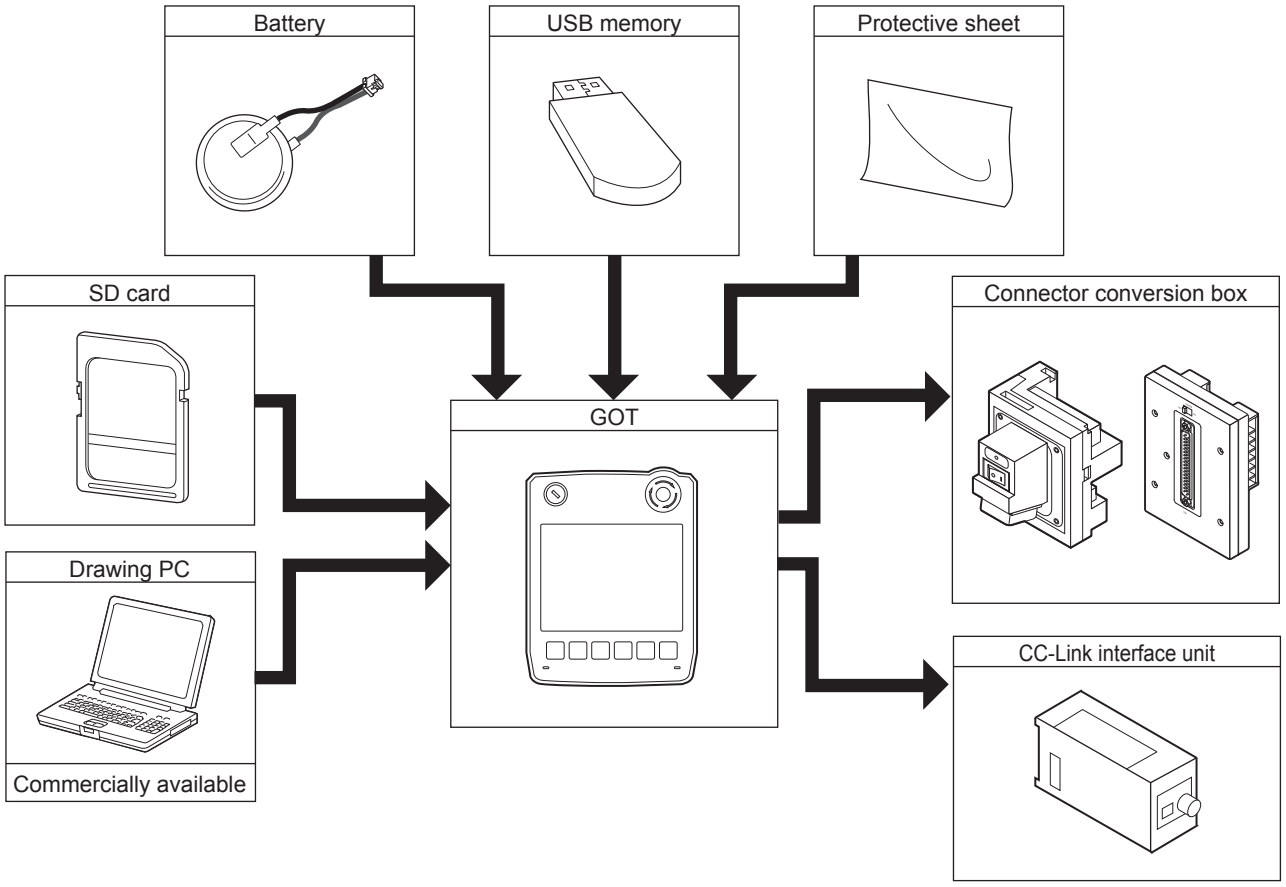

* The GT14 Handy cannot be connected to a bar code reader or a printer.

2.2 System Equipment

(1) Explanation of the GOT model name

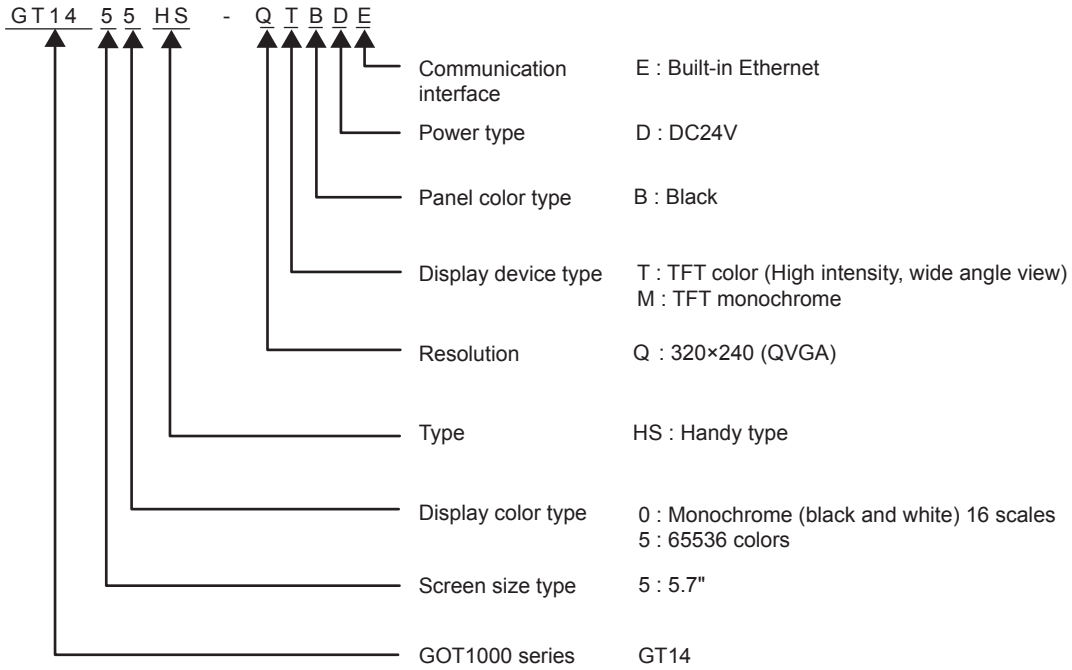

(2) Explanation of the option model name

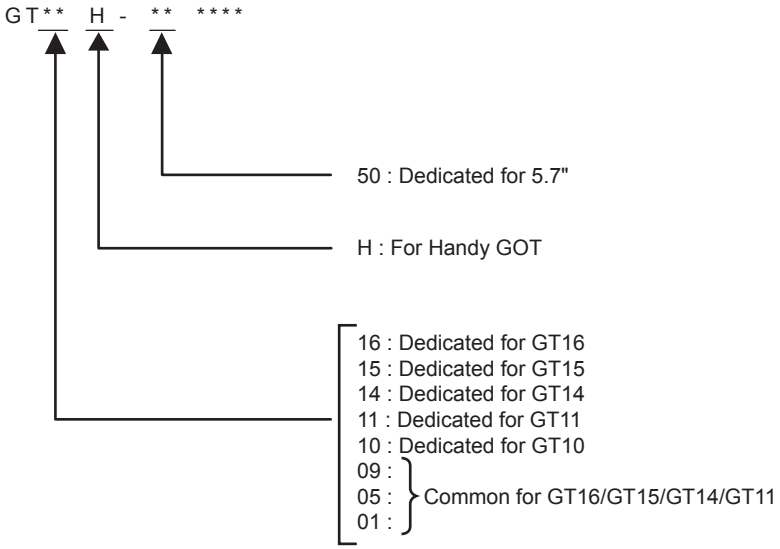

2.2.1 GOT

Product name	Model name	Specifications
GOT	GT1455HS-QTBDE	5.7" [320 × 240 dots], TFT color liquid crystal display, 65536 colors, 24VDC, memory size 9MB, built-in battery, built-in Ethernet interface
	GT1450HS-QMBDE	5.7" [320 × 240 dots], TFT monochrome liquid crystal display, monochrome (black/white), 24VDC, memory size 9MB, built-in battery, built-in Ethernet interface

Accessories
The following products are the accessories of the GOT main unit.
Two keys for selector switch
GT14 Handy GOT General Description (describes product outline, specifications, external dimensions, etc.)

2.2.2 OPTION

External cable (Sold separately)

Product name	Model name	Contents
External cable (for connecting GOT and Connector conversion box) Connector Conversion Box: GT16H-CNB-42S	GT14H-C30-42P	Connector conversion box connection side 42-pin connector, 3m
	GT14H-C60-42P	Connector conversion box connection side 42-pin connector, 6m
	GT14H-C100-42P	Connector conversion box connection side 42-pin connector, 10m
External cable (for connecting GOT and Connector conversion box, and for connecting GOT and Relay cable) Connector Conversion Box: GT11H-CNB-37S GT16H-CNB-37S	GT11H-C30-37P*1	Connector conversion box connection side/Relay cable connection side D-Sub 37-pin, 3m
	GT11H-C60-37P*1	Connector conversion box connection side/Relay cable connection side D-Sub 37-pin, 6m
	GT11H-C100-37P*1	Connector conversion box connection side/Relay cable connection side D-Sub 37-pin, 10m
External cable (for connecting GOT and Relay cable)	GT11H-C30*1	Relay cable connection side unfastened cables, 3m
	GT11H-C60*1	Relay cable connection side unfastened cables, 6m
	GT11H-C100*1	Relay cable connection side unfastened cables, 10m
External cable (for connecting GOT and CC-Link interface unit)	GT11H-C30-32P	CC-Link interface unit connection side round connector 32-pin, 3m
	GT11H-C50-32P	CC-Link interface unit connection side round connector 32-pin, 5m
	GT11H-C80-32P	CC-Link interface unit connection side round connector 32-pin, 8m
	GT11H-C130-32P	CC-Link interface unit connection side round connector 32-pin, 13m

*1 Use C or later version.

Relay cable (Sold separately)

Product name	Model name	Contents
Relay cable (for connecting External cable and PLC)	GT11H-C15R4-8P*1	FX CPU (MINI-DIN 8pin) connection cable, 1.5m
	GT11H-C15R4-25P*1	A/QnA CPU (D-Sub 25pin) connection cable, 1.5m
	GT11H-C15R2-6P*1	Q CPU (MINI-DIN 6pin) connection cable, 1.5m

*1 Use C or later version.

Connector Conversion Box (Sold separately)

Product name	Model name	Contents
Connector Conversion Box	GT16H-CNB-42S	Box for converting 42-pin connectors into terminal blocks, D-Sub 9pin connectors*1, or Ethernet RJ-45 connectors
	GT16H-CNB-37S	Box for converting D-Sub 37pin connectors into terminal blocks or Ethernet RJ-45 connectors
	GT11H-CNB-37S	Box for converting D-Sub 37pin connectors into terminal blocks or D-Sub 9pin connectors

*1 D-Sub 9pin connectors cannot be used when connected to the GT14 Handy.

Connection cables for MITSUBISHI PLCs (Sold separately)

Product name		Model name	Cable length	Contents
RS-422 Cable	FXCPU direct connection cable FX expansion board connection	GT01-C10R4-8P	1m	For connecting FXCPU (MINI DIN 8 pins) and Connector Conversion Box. For connecting FXCPU expansion board (MINI DIN 8 pins) and Connector Conversion Box.
		GT01-C30R4-8P	3m	
		GT01-C100R4-8P	10m	
	QnA/A/FXCPU direct connection cable computer link connection cable	GT01-C30R4-25P	3m	For connecting QnA/ACPU/Motion controller CPU (A series) FXCPU (D-Sub 25 pins) and Connector Conversion Box. For connecting FA-CNV □ CBL and Connector Conversion Box For connecting serial communication unit (AJ71QC24(N)-R4) and Connector Conversion Box
		GT01-C100R4-25P	10m	
	Computer link connection cable	GT09-C30R4-6C	3m	For connecting computer link module/serial communication module and Connector Conversion Box
		GT09-C100R4-6C	10m	
RS-232 Cable	QCPU direct connection cable	GT11H-C30R2-6P	3m	For connecting QCPU and Connector Conversion Box
	FX expansion board connection, FX special adaptor connection, data transfer cable	GT01-C30R2-9S	3m	For connecting FXCPU expansion board (D-Sub 9pins), special adapter (D-Sub 9 pins) and Connector conversion Box.
	FX special adaptor connection	GT01-C30R2-25P	3m	For connecting FXCPU special adaptor (D-Sub 25 pins) and Connector Conversion Box.
	Computer link connection cable	GT09-C30R2-9P	3m	For connecting computer link module/serial communication module and Connector Conversion Box
		GT09-C30R2-25P	3m	

Connection cables for OMRON PLCs (Sold separately)

Product name	Model name	Cable length	Contents
RS-422 cable	GT09-C30R40101-9P	3m	For connecting Connector Conversion Box to OMRON PLC, serial communication module, serial communication board
	GT09-C100R40101-9P	10m	
	GT09-C30R40103-5T	3m	For connecting Connector Conversion Box to serial communication board
	GT09-C100R40103-5T	10m	
	GT09-C30R40102-9P	3m	For connecting Connector Conversion Box to OMRON rack type host link unit, communication board
	GT09-C100R40102-9P	10m	
RS-232 cable	GT09-C30R20101-9P	3m	For connecting Connector Conversion Box to OMRON PLC, serial communication module, communication board, serial communication board
	GT09-C30R20102-25S	3m	For connecting Connector Conversion Box to OMRON connection cable
	GT09-C30R20103-25P	3m	For connecting Connector Conversion Box to OMRON rack type host link unit

Connection cables for KEYENCE PLCs (Sold separately)

Product name	Model name	Cable length	Description
RS-422 cable	GT09-C30R41101-5T	3m	For connecting Connector Conversion Box to KEYENCE multi-communication unit
	GT09-C100R41101-5T	10m	
RS-232 cable	GT09-C30R21101-6P	3m	For connecting Connector Conversion Box to KEYENCE PLC
	GT09-C30R21102-9S	3m	For connecting Connector Conversion Box to KEYENCE multi-communication unit
	GT09-C30R21103-3T	3m	For connecting Connector Conversion Box to KEYENCE multi-communication unit

Connection cables for SHARP PLCs (Sold separately)

Product name	Model name	Cable length	Description
RS-422 cable	GT09-C30R40601-15P	3m	For connecting Connector Conversion Box to Sharp PLC
	GT09-C100R40601-15P	10m	
	GT09-C30R40602-15P	3m	For connecting Connector Conversion Box to Sharp PLC
	GT09-C100R40602-15P	10m	
	GT09-C30R40603-6T	3m	For connecting Connector Conversion Box to Sharp link unit
	GT09-C100R40603-6T	10m	
RS-232 cable	GT09-C30R20601-15P	3m	For connecting Connector Conversion Box to Sharp PLC
	GT09-C30R20602-15P	3m	For connecting Connector Conversion Box to Sharp PLC

Connection cables for TOSHIBA PLCs (Sold separately)

Product name	Model name	Cable length	Description
RS-422 cable	GT09-C30R40501-15P	3m	For connecting Connector Conversion Box to TOSHIBA PLC
	GT09-C100R40501-15P	10m	
	GT09-C30R40502-6C	3m	For connecting Connector Conversion Box to TOSHIBA PLC
	GT09-C100R40502-6C	10m	
	GT09-C30R40503-15P	3m	For connecting Connector Conversion Box to TOSHIBA PLC
	GT09-C100R40503-15P	10m	
RS-232 cable	GT09-C30R20501-9P	3m	For connecting Connector Conversion Box to TOSHIBA PLC
	GT09-C30R20502-15P	3m	For connecting Connector Conversion Box to TOSHIBA PLC

Connection cables for JTEKT PLCs (Sold separately)

Product name	Model name	Cable length	Description
RS-422 cable	GT09-C30R41201-6C	3m	For connecting Connector Conversion Box to JTEKT PLC, link unit
	GT09-C100R41201-6C	10m	
RS-232 cable	GT09-C30R21201-25P	3m	For connecting Connector Conversion Box to JTEKT RS-232/RS-422 converter

Connection cables for HITACHI PLCs (Sold separately)

Product name	Model name	Cable length	Description
RS-232 cable	GT09-C30R21301-9S	3m	For connecting Connector Conversion Box to HITACHI communication module
RS-422 cable	GT09-C30R41301-9S	3m	For connecting Connector Conversion Box to HITACHI PLC
	GT09-C100R41301-9S	10m	

Connection cables for HITACHI IES PLCs (Sold separately)

Product name	Model name	Cable length	Description
RS-422 cable	GT09-C30R40401-7T	3m	For connecting Connector Conversion Box to HITACHI IES intelligent serial port module
	GT09-C100R40401-7T	10m	
RS-232 cable	GT09-C30R20401-15P	3m	For connecting Connector Conversion Box to HITACHI IES PLC, intelligent serial port module
	GT09-C30R20402-15P	3m	For connecting Connector Conversion Box to HITACHI IES PLC

Connection cables for FUJI FA PLCs (Sold separately)

Product name	Model name	Cable length	Description
RS-232 cable	GT09-C30R21003-25P	3m	For connecting Connector Conversion Box to FUJI FA RS-232C interface card, RS-232C/485 interface capsule, general-purpose interface module
RS-422 cable	GT09-C30R41001-6T	3m	
	GT09-C100R41001-6T	10m	

Connection cables for Panasonic PLCs (Sold separately)

Product name	Model name	Cable length	Description
RS-232 cable	GT09-C30R20901-25P	3m	For connecting Connector Conversion Box to Panasonic RS422/232C conversion adapter
	GT09-C30R20902-9P	3m	For connecting Connector Conversion Box to the tool port or RS232C port of Panasonic PLC, computer communication unit
	GT09-C30R20903-9P	3m	For connecting Connector Conversion Box to the RS232C port of Panasonic PLC
	GT09-C30R20904-3C	3m	For connecting Connector Conversion Box to the RS232C port of Panasonic PLC

Connection cables for YASKAWA PLCs (Sold separately)

Product name	Model name	Cable length	Description
RS-422 cable	GT09-C30R40201-9P	3m	For connecting Connector Conversion Box to YASKAWA MEMOBUS module
	GT09-C100R40201-9P	10m	
	GT09-C30R40202-14P	3m	For connecting Connector Conversion Box to YASKAWA PLC
	GT09-C100R40202-14P	10m	
RS-232 cable	GT09-C30R20201-9P	3m	For connecting Connector Conversion Box to YASKAWA PLC
	GT09-C30R20202-15P	3m	
	GT09-C30R20203-9P	3m	
	GT09-C30R20204-14P	3m	
	GT09-C30R20205-25P	3m	For connecting Connector Conversion Box to YASKAWA MEMOBUS module

Connection cables for YOKOGAWA PLCs (Sold separately)

Product name	Model name	Cable length	Description
RS-422 cable	GT09-C30R40301-6T	3m	For connecting Connector Conversion Box to YOKOGAWA PC link module
	GT09-C100R40301-6T	10m	
	GT09-C30R40302-6T	3m	
	GT09-C100R40302-6T	10m	
	GT09-C30R40303-6T	3m	For connecting Connector Conversion Box to YOKOGAWA temperature controller
	GT09-C100R40303-6T	10m	
	GT09-C30R40304-6T	3m	
	GT09-C100R40304-6T	10m	
RS-232 cable	GT09-C30R20301-9P	3m	For connecting Connector Conversion Box to YOKOGAWA CPU port/D-Sub 9-pin conversion cable
	GT09-C30R20302-9P	3m	For connecting Connector Conversion Box to YOKOGAWA PC link module
	GT09-C30R20304-9S	3m	For connecting Connector Conversion Box to YOKOGAWA converter

Connection cables for Allen-Bradley PLCs (Sold separately)

Product name	Model name	Cable length	Description
RS-232 cable	GT09-C30R20701-9S	3m	For connecting Connector Conversion Box to Allen-Bradley PLC
	GT09-C30R20702-25P	3m	For connecting Connector Conversion Box to Allen-Bradley Adapter

Connection cables for SIEMENS PLCs (Sold separately)

Product name	Model name	Cable length	Description
RS-232 cable	GT09-C30R20801-9S	3m	For connecting Connector Conversion Box to SIEMENS HMI Adapter

Connection cables for SHINKO indicating controller PLCs (Sold separately)

Product name	Model name	Cable length	Description
RS-232 cable	GT09-C30R21401-4T	3m	For connecting Connector Conversion Box to SHINKO indicating controller

SD card (Sold separately)

Product name	Model name	Description
SD card	L1MEM-2GBSD	SD memory card 2GB
	L1MEM-4GBSD	SDHC memory card 4GB
	-	Commercially-available SD card*1

*1 Some models with the operations checked by our company are usable.
For the operation-checked models, refer to "Operation Check Results of Third Party SD Cards on GT14 Model" (Hime-T-P-0089) separately available, or contact your local distributor.

USB memory (Sold separately)

Product name	Model name	Description
USB memory	-	Commercially-available USB memory*3

*3 Some models with the operations checked by our company are usable.
For the operation-checked models, refer to "List of valid devices applicable for GOT1000 series" (GOT-A-0010) separately available, or contact your local distributor.

Battery (Sold separately)

Product name	Model name	Description
Battery*4	GT11-50BAT	For clock data, alarm history, recipe data, time action setting value, advanced alarm, advanced recipe, logging, hard copy, and SRAM user area backups

*4 At GOT purchase, it is installed in the main unit.

Protective sheet (Sold separately)

Product name	Model name	Description	
Protective sheet	GT14H-50PSC	Display section clear 5 sheets	Transparent protective sheet which protects the display section only.

Emergency stop SW guard cover (Sold separately)

Product name	Model name	Description
Emergency stop SW guard cover	GT14H-50ESCOV	Cover for preventing the emergency stop SW incorrect operation

Drawing software (Sold separately)

Product name	Model name	Contents
GT Designer3	SW ☐ DNC-GTD3-E (☐ indicates the version.)	Drawing software for GOT1000 series

PC connection cable (Sold separately)

Product name	Model name	Cable length	Description
Project data transfer cable	GT09-C30USB-5P	3m	GOT (USB mini) ⟷ PC (USB)

CC-Link interface unit (Sold separately)

Product name	Model name	Description
CC-Link interface unit	GT11HS-CCL	The unit for connecting the Handy GOT to the CC-Link system
	GT11H-CCL	

3. SPECIFICATIONS

3.1 General Specifications

<table>
<tr><th colspan="2">Item</th><th colspan="6">Specifications</th></tr>
<tr><td rowspan="2">Operating ambient temperature</td><td>Display section</td><td colspan="6">0 to 40℃</td></tr>
<tr><td>Other than display section</td><td colspan="6">0 to 40℃</td></tr>
<tr><td colspan="2">Storage ambient temperature</td><td colspan="6">-20 to 60℃</td></tr>
<tr><td colspan="2">Operating ambient humidity</td><td colspan="6">10 to 90% RH, non-condensing</td></tr>
<tr><td colspan="2">Storage ambient humidity</td><td colspan="6">10 to 90% RH, non-condensing</td></tr>
<tr><td colspan="2" rowspan="5">Vibration resistance</td><td rowspan="5">Conforms to JIS B3502 and IEC61131-2</td><td></td><td>Frequency</td><td>Acceleration</td><td>Half-amplitude</td><td>Sweep Count</td></tr>
<tr><td rowspan="2">Under intermittent vibration</td><td>5 to 8.4Hz</td><td>-</td><td>3.5mm</td><td rowspan="2">10 times each in X, Y and Z directions</td></tr>
<tr><td>8.4 to 150Hz</td><td>9.8m/s^2</td><td>-</td></tr>
<tr><td rowspan="2">Under continuous vibration</td><td>5 to 8.4Hz</td><td>-</td><td>1.75mm</td><td rowspan="2">-</td></tr>
<tr><td>8.4 to 150Hz</td><td>4.9m/s^2</td><td>-</td></tr>
<tr><td colspan="2">Shock resistance</td><td colspan="6">Compliant with JIS B3502, IEC 61131-2 (147m/s^2, 3 times each in X, Y and Z directions, 11ms duration)</td></tr>
<tr><td colspan="2">Operating atmosphere</td><td colspan="6">Must be free of lamp black, corrosive gas, flammable gas, or excessive amount of electro conductive dust particles and must be no direct sunlight. (Same as for saving)</td></tr>
<tr><td colspan="2">Operating altitude*1</td><td colspan="6">2000m (6562 ft) max.</td></tr>
<tr><td colspan="2">Overvoltage category*2</td><td colspan="6">II or less</td></tr>
<tr><td colspan="2">Pollution degree*3</td><td colspan="6">2 or less</td></tr>
<tr><td colspan="2">Cooling method</td><td colspan="6">Self-cooling</td></tr>
<tr><td colspan="2">Grounding</td><td colspan="6">Class D grounding (100Ω or less),
To be connected to the panel when grounding is not possible.</td></tr>
</table>

*1 Do not use or store the GOT under pressures higher than the atmospheric pressure of altitude 0m (0ft.). Failure to observe this instruction may cause a malfunction.
When the air inside the control panel is purged by pressurization, the surface sheet may be lifted by high pressure. As a result, the touch panel may be difficult to press, and the sheet may be peeled off.

*2 This indicates the section of the power supply to which the equipment is assumed to be connected between the public electrical power distribution network and the machinery within the premises.
Category II applies to equipment for which electrical power is supplied from fixed facilities.
The surge voltage withstand level for up to the raged voltage of 300V is 2500V.

*3 This index indicates the degree to which conductive pollution is generated in the environment where the equipment is used.
In pollution degree 2, only non-conductive pollution occurs but temporary conductivity may be produced due to condensation.

3.2 Performance Specifications

The performance specifications are as follows.

Item		Specifications	
		GT1455HS-QTBDE	GT1450HS-QMBDE
Display section[*1]	Type	TFT color liquid crystal display	TFT monochrome (black/white) liquid crystal display
	Screen size	5.7"	
	Resolution	320 × 240 [dots]	
	Display size	115 (W) × 86 (H) [mm]	
	Display character	16-dot standard font: 20 characters × 15 lines, 12-dot standard font: 26 characters × 20 lines	
	Display color	65536 colors	Monochrome (black/white) 16 scales
	Display angle[*2]	Left/Right: 80 degrees, Top: 80 degrees, Bottom: 60 degrees	Left/Right: 80 degrees, Top: 80 degrees, Bottom: 60 degrees
	Intensity of LCD only	400 [cd/m^2]	230 [cd/m^2]
	Intensity adjustment	8-level adjustment	
	Life	Approx. 50,000h. (Time for contrast to become 1/5 at operating ambient temperature of 25℃)	
Backlight		LED type Backlight off/screen saving time can be set.[*3]	
	Life	Approx. 70,000h or longer. (Time for display intensity reaches 50% at operating ambient temperature of 25℃)	
Touch panel[*4]	Type	Analog resistive film	
	Key size	Minimum 2 × 2 dots (per key)	
	Number of points touched simultaneously	Simultaneous presses not allowed. (Only 1 point can be touched.)	
	Life	1 million times (operating force 0.98N max.)	
Switch	Operation switch	6 switches (6 contacts/common) N/O contact, Maximum rating 10mA/24VDC, Life: 1,000,000 times	
	Grip switch	1 switch (single wiring) (IDEC HE3B-M2PB) Enable switch (deadman switch) 3-position system of OFF ↔ ON ↔ OFF 2 N/O contacts Maximum rating 1A/24VDC (resistance load), Maximum rating 0.3A/24VDC (induction load), Life: 100,000 times	
	Emergency stop switch	1 switch (single wiring) (IDEC XA1E-BV303R) 3 N/C contacts Maximum rating 1A/24VDC (resistance load), Maximum rating 0.3A/24VDC (induction load), Life: 100,000 times	
	Keylock switch (2-position switch)	1 switch (single wiring) (IDEC AS6M-2KT1PB) 2-notch type (Manual stop at each position/A key can be inserted and removed on only the left side./On the right side, a key cannot be removed./Two keys are provided.) 2-position, Maximum rating 1A/24VDC (resistance load), Maximum rating 0.3A/24VDC (induction load), Life: 100,000 times	
	SD card access switch	Prohibits accessing the SD card removing the card from the GOT. ON: SD card being accessed (SD card removal prohibited) OFF: SD card not accessed (SD card removal possible)	
LED	POWER LED	1 LED Lit in green: Power is correctly supplied. Lit in orange: Screen saving and backlight not lit. Blinks in orange/green: Blown back light bulb. Not lit: Power is not supplied.	
	LED for grip switch display	1 LED, green (lighting control from display unit part)	
	SD card access LED	Lit (Green): SD card being accessed, Not lit: SD card is not accessed.	
	Ethernet communication status LED	LED1: Turns on in green during 100Mbps transmission. LED2: Turns on in green during data communication.	
Memory	C drive[*5]	Flash memory (Internal), 9Mbytes (for storing project data)	
		Life (Number of write times): 100,000 times	
	D drive	SRAM (internal), 512Kbytes (battery backup)	
Battery		GT11-50BAT lithium battery	
	Backup target	Clock data, alarm history, recipe data, time action setting value, advanced alarm, advanced recipe, logging, hard copy and SRAM user area	
	Life	Approx. 5 years (Operating ambient temperature of 25℃)	

Item			Specifications	
			GT1455HS-QTBDE	GT1450HS-QMBDE
Built-in interface	RS-232 RS-422		RS-232, RS-422/485, 1ch each (When you use, select any of channels including Ethernet. Ethernet is set at factory shipment.) Transmission speed: 115200/57600/38400/19200/9600/4800bps Connector shape: Round type 32pins (Male) Application: For communicating with a controller Terminating resistor: 330Ω (Fixed)	
	Ethernet		Data transfer method: 100BASE-TX, 10BASE-T, 1ch Connector shape: Round type 32pins (Male) Application: For communicating with a controller, or using the gateway function, connecting a PC (project data upload/download, OS installation, FA transparent function)	
	USB	Host	USB(Full Speed 12Mbps), Host, 1ch Connector shape: TYPE-A Application: Data transfer, data storage	
		Device	USB(Full Speed 12Mbps), device 1ch Connector shape: Mini-B Application: For connecting a personal computer (Project data upload/download, OS installation, FA transparent function*7)	
	SD card		SD standard, 1ch Supported memory card: SDHC memory card, SD memory card Application: For uploading/downloading project data, OS installation, storing logging data	
Buzzer output			Single tone (tone length adjustable)	
Protective structure*6			IP65f (valid when the external cable is connected, except for the connector conversion box side)	
External dimensions			145 (W) × 185 (H) × 79.3 (D) [mm]	
Weight			Approx. 0.79kg (GT14 Handy main unit only)	
Compatible software package (GT Designer3 version)			Version1.71Z or later	

*1 Bright dots (always lit) and dark dots (unlit) may appear on a liquid crystal display panel due to its characteristics. It is impossible to completely avoid this symptom, as the liquid crystal display comprises of a great number of display elements. Flickers may be observed depending on the display color.
Please note that these dots appear due to its characteristic and are not caused by product defect.
Flickers and partial discoloration may be generated on the liquid crystal display panel due to the display contents or the contrast adjustment. However, please note that these phenomena appear due to its characteristic and are not caused by product defect.
There is a difference in the display brightness and the color tones between liquid crystal display panels. When using multiple liquid crystal display panels, please note that there is an individual difference between them.
A crosstalk (shadow as an extension of the display) may appear on the liquid crystal display panel. Please note hat it appears due to its characteristic.
When the display section is seen from the outside of the display angle, the display color seems like it has changed. Please note that it is due to its characteristic.
Please note that the response time, brightness and color of the liquid crystal display panel may vary depending on the usage environmental temperature.
(Especially, the response time of liquid crystal display is slower in the lower temperature due to its characteristic. Please use the display after checking the response time.)
When the same screen is displayed for a long time, an incidental color or partial discoloration is generated on the screen due to heat damage, and it may not disappear.
To prevent the heat damage, the screen saver function is effective.
For details on the screen saver function, refer to the following.

12.1 Display Setting

Just after the GOT is powered off, sometimes an image lag or partial discoloration is generated temporary. However they are caused by the characteristic of the liquid crystal. (After powering off, they disappear within a few minutes.)

*2 Gradation inversion is a characteristic of liquid crystal displays. Please be forewarned that depending on the displayed color, the visualization may be difficult even within the described view angle.

*3 The GOT screen saving/backlight off function prevents images from becoming permanently etched on the display screen and increases the backlight life.

12.1 Display Setting

*4 The touch panel is analog resistive film-type. If you touch the panel simultaneously in 2 points or more, the switch that is located around the center of the touched point, if any, may operate. Do not touch the panel in 2 points or more simultaneously.
Do not press the GOT display section with a pointed material as a pen or driver. Doing so can result in a damage or failure of the display section.
An analog resistive film-type touch panel does not require adjustment usually. However, misalignment between object position and actual touched position may be caused as usage time passes. If misalignment between object position and actual touched position may occur, adjust the touch panel position. Misalignment between object position and actual touched position may operate an unintended object, which causes unintended operation by mis-output and mis-operation.

*5 ROM in which new data can be written without deleting the written data.

*6 Note that this does not guarantee all user's operation environment. The protection is not applied when the interface environment protection cover is removed.
In addition, the product may not be used in environments under exposition of oil or chemicals for a long period of time, or in environments filled with oil-mist.

*7 The USB cable that connects the GOT and a personal computer is connected to the USB interface (device) in the interface environmental protection cover of the GOT. Since the Handy GOT is used with the interface environment protection cover opened, it is out of the warranty for protective structure (IP65F).

3.3 Power Supply Specifications

Item		Specifications	
		GT1455HS-QTBDE	GT1450HS-QMBDE
Input power supply voltage		DC24V (+10% -15%)	
Power consumption		8.4W or less (350mA/DC24V)	7.5W or less (310mA/DC24V)
	At backlight off	7.0W or less (290mA/DC24V)	
Inrush current		30A or less (maximum load) 2ms	
Permissible instantaneous power failure time		Within 5ms	
Noise immunity		Noise voltage: 1000Vp-p, Noise width: 1μs (by noise simulator of 30 to 100Hz noise frequency)	
Dielectric withstand voltage		500VDC for 1 minute (across power supply terminals and earth)	
Insulation resistance		10MΩ or larger by insulation resistance tester (across power supply terminals and earth)	

POINT

Operation at momentary power failure

The GOT continues to operate even upon 5ms or shorter instantaneous power failure.
The GOT stops operating if there is extended power failure or voltage drop, while it automatically resumes operation as soon as the power is restored.

3.4 Battery specifications

The battery backs up clock data and data stored in the built-in RAM (D drive) including alarm history, recipe data, time action setting value, advanced alarm, advanced recipe, logging, hard copy, and SRAM user area. A battery is installed to GT14 Handy GOT when shipped from the factory.

3.4.1 Applicable battery

The following batteries are applicable for GT14 Handy GOT.

Model	Description
GT11-50BAT	For clock data, alarm history, recipe data, time action setting value, advanced alarm, advanced recipe, logging, hard copy, and SRAM user area backups

3.4.2 Battery specifications

The following shows the battery specifications.

Item	Specifications
Model	GT11-50BAT
Type	Magnesium manganese dioxide lithium primary battery
Initial voltage	3.0V
Life	Approx. about 5 years (Operating ambient temperature of 25℃)
Application	For clock data, alarm history, recipe data, time action setting value, advanced alarm, advanced recipe, logging, hard copy, and SRAM user area backups

POINT

For the battery directive in EU member states, refer to the following.

☞ Handling of Batteries and Devices with Built-in Batteries in EU Member States

POINT

Battery life and replacement time

(1) Battery life reference: Approx.5 years in actual use (Ambient temperature: 25°C)
Battery replacement time reference: 4 to 5 years
The battery is susceptible to natural discharge. Order one when necessary.

(2) Check if the battery condition is normal within the utility.
Refer to the following for the details of battery status display.

☞ 12.1 Display Setting

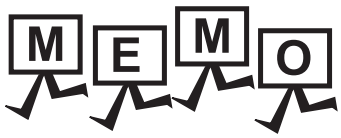
MEMO

4. PARTS NAME

4.1 Front Panel

4.1.1 Name and specifications

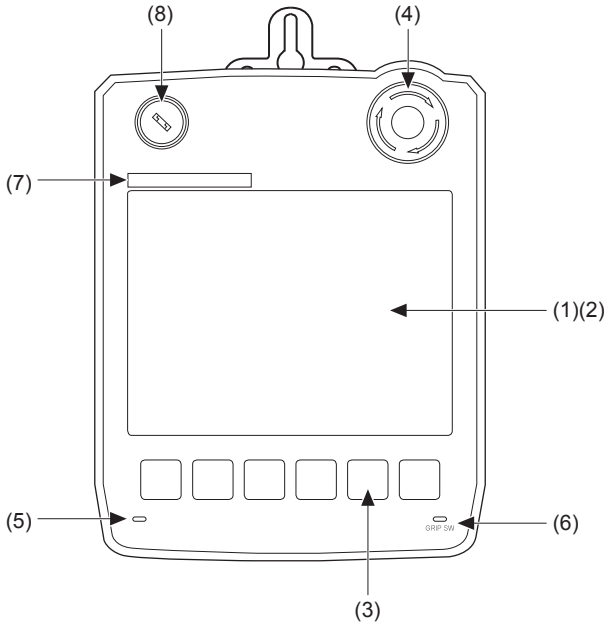

No.	Name	Specifications
(1)	Display section	Displays the utility screen and the user creation screen.
(2)	Touch panel	For touch switch operation on the utility screen and the user creation screen.
(3)	Operation switch (6 switches)	Switch for external direct wiring (independent contact)
(4)	Emergency stop switch	Switch for external direct wiring (independent contact)
(5)	POWER LED	Lit in green: Power is correctly supplied. Lit in orange: Screen saving and backlight not lit. Blinks in orange/green: Blown back light bulb. Not lit: Power is not supplied.
(6)	Display LED for grip switch	Display LED for grip switch (green) (lighting control from display section)
(7)	Logo label	Removable
(8)	Keylock switch (2-position switch)	Switch for external direct wiring (independent contact)

■ Removing the logo label

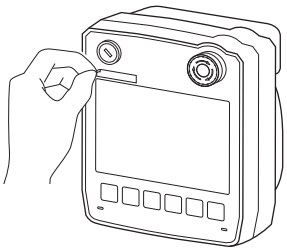

1. The logo label can be removed as indicated in the figure.

4.2 Back Panel

4.2.1 Name and specifications

Environmental protection back cover closed

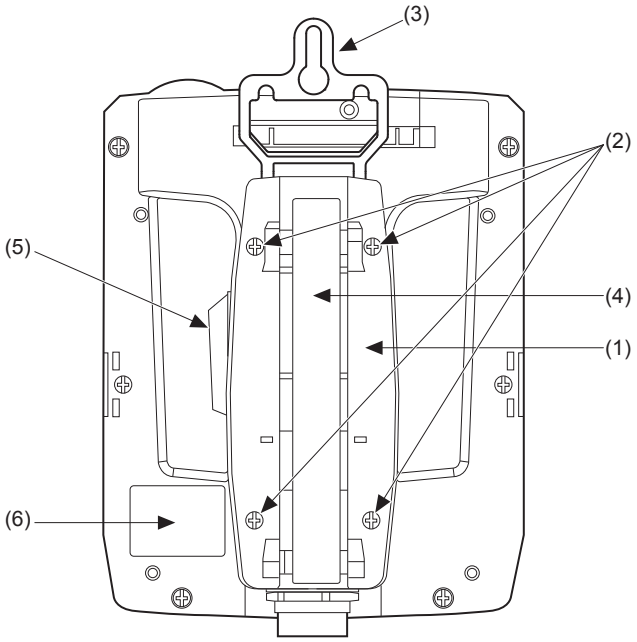

Environmental protection back cover opened

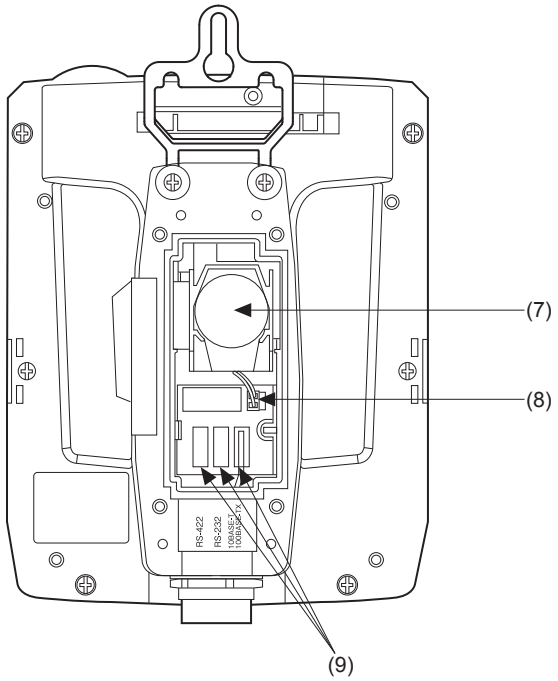

No.	Name	Specifications
(1)	Environmental protection back cover	Opened and closed when the PLC communication type is changed (Ethernet ↔ RS-422 ↔ RS-232, before shipping: Ethernet), or the battery is replaced.
(2)	Environmental protection back cover screw	For opening and closing the environmental protection back cover (drop prevention screw)
(3)	Hook for hanging on walls	Hook when the Handy GOT is used hanging on walls.
(4)	Hand strap	Used to hold the Handy GOT in hand by putting a hand under the strap. Length adjustable.
(5)	Grip switch	Switch for external direct wiring (independent contact)
(6)	Rating plate	The following contents are described. The model name, current consumption, product number, H/W version, F/W version, and MAC address, and "G" (G indicates the ROHS correspondence.)
(7)	Battery	For clock data, alarm history, recipe data, time action setting value, advanced alarm, advanced recipe, logging, hard copy, and SRAM user area backups
(8)	Connector for battery connection	For battery connection
(9)	RS-422 connector	Connector for PLC communication using RS-422*1
	RS-232 connector	Connector for PLC communication using RS-232*1
	Ethernet connector	Connector for PLC communication using Ethernet*1

*1 Set either of the RS-422 connector, RS-232 connector, or Ethernet connector. The Ethernet connector is set at factory shipment.

4.2.2 Opening and closing of environmental protection back cover

■ Opening

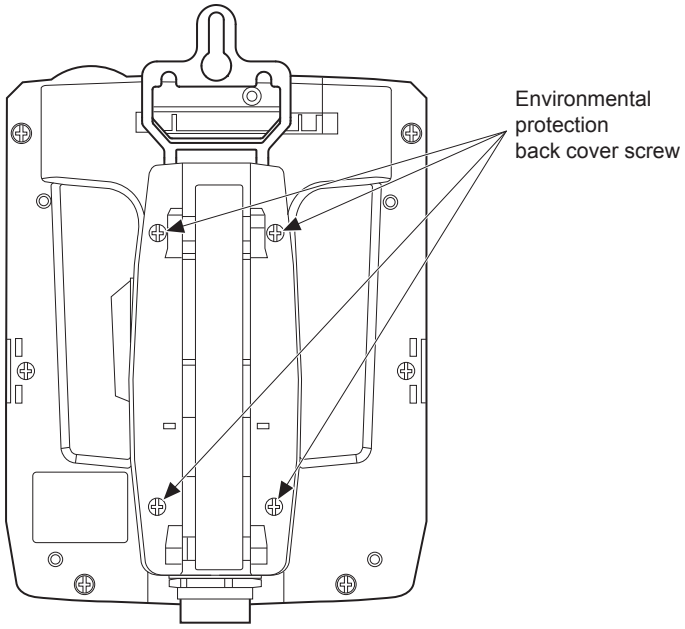

1. Loosen the environmental protection back cover screws at four points to remove the cover.

■ Closing

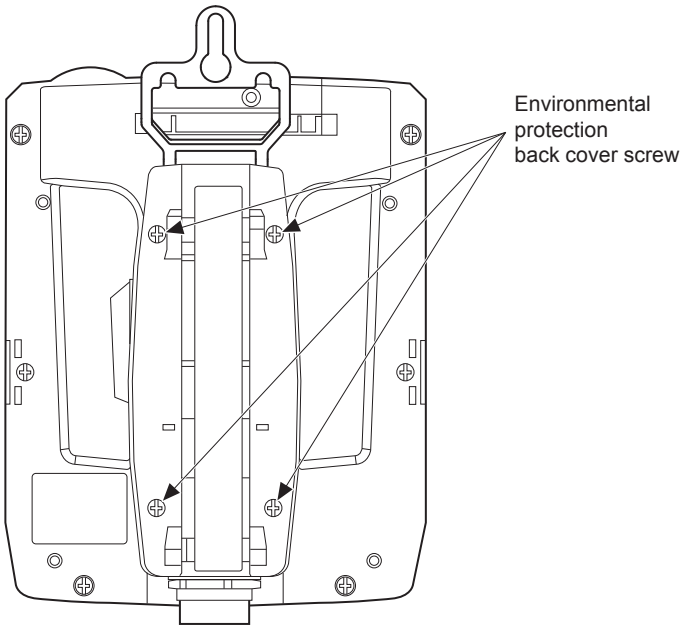

1. Mount the environmental protection back cover, and tighten the screws with the following torque. Too much tightening may cause damage.
Tightening torque: 0.36 to 0.48 N•m

4.3 Top Face (Interface)

4.3.1 Names and specifications

■ Interface environmental protection cover closed

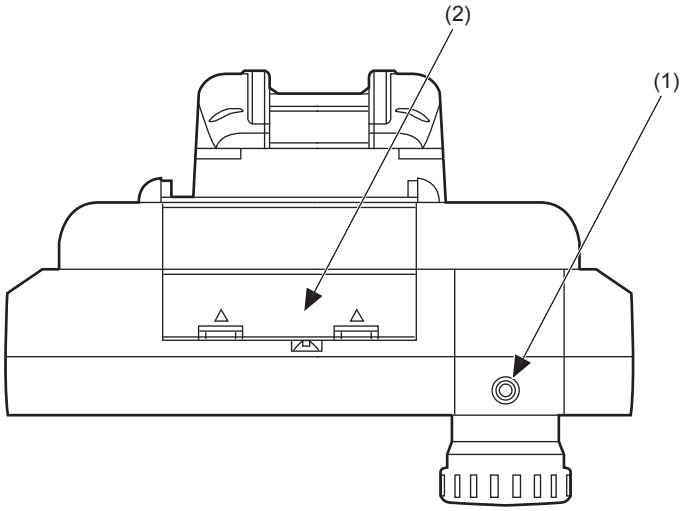

■ Interface environmental protection cover opened

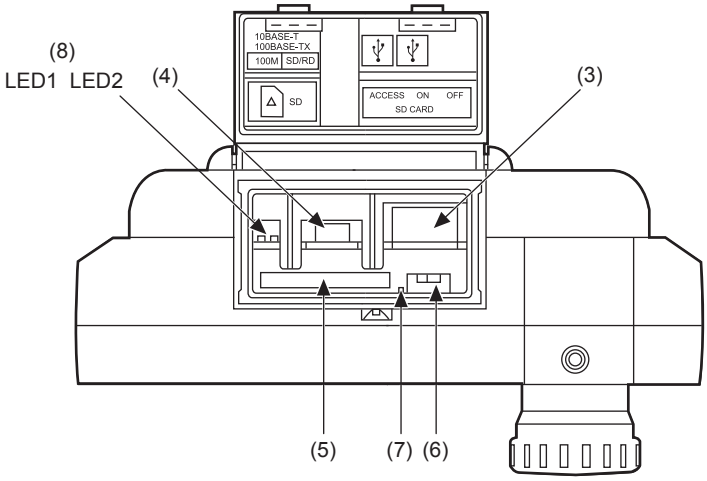

No.	Name	Specifications
(1)	Emergency stop switch guard cover installing hole	Threaded hole for mounting the GT14H-50ESCOV type emergency stop switch guard (option) (M3)
(2)	Interface environmental protection cover	Opened and closed when the USB port is used or the SD card is inserted.
(3)	USB interface (Host)	For data transfer, data storage (connector type: TYPE-A)
(4)	USB interface (Device)	For PC connection (connector type: MINI-B)
(5)	SD card interface	For installing the SD card to the GOT
(6)	SD card access switch	Prohibits accessing the SD card removing the card from the Handy GOT. ON: SD card being accessed (SD card removal prohibited) OFF: SD card not accessed (SD card removal possible)
(7)	SD card access LED	Lit: SD card being accessed, Not lit: SD card is not accessed.
(8)	Ethernet communication status LED	LED1: Turns on in green during 100Mbps transmission, LED2: Turns on in green during data communication.

5. UL, cUL STANDARDS AND EMC DIRECTIVE

5.1 UL, cUL Standards

UL, cUL Standard are recognized in use by the following combination.

<a>

- GT14HANDY (GT1455HS-QTBDE series, GT1450HS-QMBDE series)*1
- GT16H-CNB-42S*2
- External cable (GT14H-C30-42P, GT14H-C60-42P, GT14H-C100-42P)*3

<b>

- GT14HANDY (GT1455HS-QTBDE series, GT1450HS-QMBDE series)*1
- GT16H-CNB-37S
- External cable (GT11H-C30-37P, GT11H-C60-37P, GT11H-C100-37P)*4

Cable must be properly installed and routed to ensure protection of the Cable.

*1 Hardware version B or later
*2 Hardware version D or later
*3 Version B or later
*4 Version D or later

POINT

Checking method of hard ware version.

Confirm the hardware version with the products rating plate.

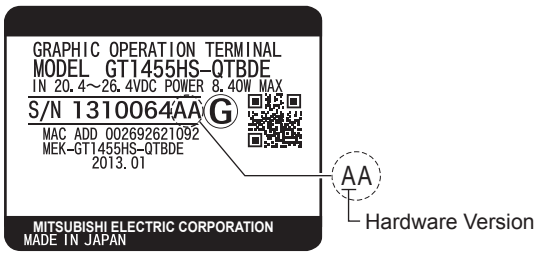

■ General notes on Power supply

This equipment must be supplied by a UL Listed or Recognized 24V DC rated power supply and UL Listed or Recognized fuse rated not higher than 4A, or a UL Listed Class 2 power supply.

■ Using GOT

GOT is for use on a Flat Surface of a Type 1 Enclosure.

5.2 EMC Directive

For the products sold in European countries, the conformance to the EMC Directive, which is one of the European Directives, has been a legal obligation since 1996. Also, conformance to the Low Voltage.
Directive, another European Directives, has been a legal obligation since 1997.
Manufacturers who recognize their products must conform to the EMC and Low Voltage Directive are required to declare that their products conform to these Directives and put a "CE mark" on their products.

- This product is designed for use in industrial applications.
- Authorized Representative in the European Community: Mitsubishi Electric Europe B.V.
  Gothaer Str. 8, 40880 Ratingen, Germany

5.2.1 Requirements to Meet EMC Directive

EMC Directives are those which require "any strong electromagnetic force is not output to the external.:Emission (electromagnetic interference)" and "It is not influenced by the electromagnetic wave from the external.: Immunity (electromagnetic sensitivity)".
Items ■ EMC directive thru ■ Grounding summarize the precautions to use GOT and configure the mechanical unit in order to match the EMC directives.
Though the data described herein are produced with our best on the basis of the requirement items and standards of the restrictions gathered by Mitsubishi, they do not completely guaranteed that all mechanical unit manufactured according to the data do not always match the above directives. The manufacturer itself which manufactures the mechanical unit must finally judge the method and others to match the EMC directives.

■ EMC directive

The standards of the EMC Directive are shown below.

Applied standard	Test standard	Test details	Standard value
EN61131-2 : 2007	EN55011 Radiated noise*1	Electromagnetic emissions from the product are measured.	30M-230MHz QP: 30dBμV/m (30m in measurement range)*2, *3 230M-1000MHz QP: 37dBμV/m (30m in measurement range)*2, *3
	EN61000-4-2 Electrostatic immunity*1	Immunity test in which static electricity is applied to the cabinet of the equipment.	± 4kV Contact discharge ± 8kV Aerial discharge
	EN61000-4-3 Radiated field AM modulation*1	Immunity test in which field is irradiated to the product.	80-1000MHz: 10V/m 1.4-2GHz: 3V/m 2.0-2.7GHz: 1V/m 80%AM modulation@1kHz
	EN61000-4-4 Fast transient burst noise*1	Immunity test in which burst noise is applied to the power line and signal lines.	Power line: 0.5kV Digital I/O(24V or higher): 0.5kV (Digital I/O(24V or less))> 250V (Analog I/O, signal lines)> 250V
	EN61000-4-5 Surge immunity*1	Immunity test in which lightening surge is applied to the product.	Power line (between line and ground): ± 0.5kV Power line (between lines): ± 0.5kV
	EN61000-4-6 Conducted RF immunity*1	Immunity test in which a noise inducted on the power and signal lines is applied.	Power line: 3V Data communication port: 3V
	EN61000-4-8 Power supply frequency magnetic field immunity	Test for checking normal operations under the circumstance exposed to the ferromagnetic field noise of the power supply frequency (50/60Hz).	30 A/m

*1 The GOT is an open type device (device installed to another device) and must be installed in a conductive control panel.
The above test items are conducted in the condition where the GOT is installed on the conductive control panel and combined with the Mitsubishi PLC.
*2 QP: Quasi-peak value, Mean : Average value
*3 The above test items are conducted in the following conditions.
30M-230MHz QP : 40dBμV/m (10m in measurement range)
230M-1000MHz QP : 47dBμV/m (10m in measurement range)

■ Control panel

Make sure to combine the GT14 Handy GOT with the Connector Conversion Box to comply with the EMC directive. The Connector conversion box is an open type device (device installed to another device) and must be installed in a conductive control panel.
It not only assure the safety but also has a large effect to shut down the noise generated from GOT, on the control panel.

(1) Control panel

(a) The control panel must be conductive.

(b) When fixing a top or bottom plate of the control panel with bolts, do not coat the plate and bolt surfaces so that they will come into contact.
And connect the door and box using a thick grounding cable in order to ensure the low impedance under high frequency.

(c) When using an inner plate to ensure electric conductivity with the control panel, do not coat the fixing bolt area of the inner plate and control panel to ensure conductivity in the largest area as possible.

(d) Ground the control panel using a thick grounding cable in order to ensure the low impedance under high frequency.

(2) Connection of power and ground wires

Ground and power supply wires for the GOT must be connected as described below.
Provide a grounding point near the GOT. Short-circuit the FG terminals of the GOT (FG: frame ground) and ground them with the thickest and shortest wire possible (The wire length must be 30cm (11.81in.) or shorter.)
The FG terminals function is to pass the noise generated in the PC system to the ground, so an impedance that is as low as possible must be ensured. As the wires are used to relieve the noise, the wire itself carries a large noise content and thus short wiring means that the wire is prevented from acting as an antenna.
Note) A long conductor will become a more efficient antenna at high frequency.

(3) Shock protection

In order to prevent those who are unfamiliar with power facility, e.g., an operator, from getting a shock, make sure to take the following measures on the control panel.

(a) Store the GOT within the control panel locked, and allow only those who are familiar with power facility to unlock the panel.

(b) Build the structure in order that the power supply will be shut off when the control panel is opened.

(4) Dustproof and waterproof features

The control panel also provides protection from dust, water and other substances. Insufficient ingression protection may lower the insulation withstand voltage, resulting in insulation destruction. The insulation in the GOT is designed to cope with the pollution level 2, so use in an environment with pollustion level 2 or better.

Pollution level1 :	An environment where the air is dry and conductive dust does not exist.
Pollution level2 :	An environment where conductive dust does not usually exist, but occasional temporary conductivity occurs due to the accumulated dust. Generally, this is the level for inside the control panel equivalent a control room or on the floor of a typical factory.
Pollution level3 :	An environment where conductive dust exits and conductivity may be generated due to the accumulated dust. An environment for a typical factory floor.
Pollution level4 :	Continuous conductivity may occur due to rain, snow, etc. An outdoor environment.

■ Grounding

The following are applicable ground terminals. Use them in the grounded state.
Be sure to ground the GOT for ensuring the safety and complying with the EMC Directive.

Protective grounding :	Ensures the safety of the GOT and improves the noise resistance.
Functional grounding :	Improves the noise resistance.

5.2.2 EMC Directive-Compliant System Configuration

The information of the EMC Directive compliant models, contact your local distributor.

■ GOT

Use any of the following GOTs with which CE mark logo is printed on the rating plate.
When using a GOT other than shown below, the system does not conform to the EMC Directive.

Item	Model	Version
GT14 HandyGOT	GT1455HS-QTBDE GT1450HS-QMBDE	Hardware version B or later
Connector Conversion Box	GT16H-CNB-42S	Hardware version D or later
	GT16H-CNB-37S	-
	GT11H-CNB-37S	-

POINT

Checking method of hard ware version.
Confirm the hardware version with the products rating plate.

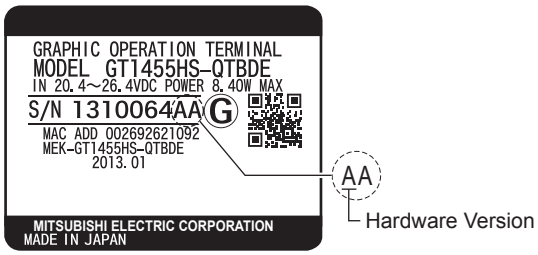

■ Connection method

Use the following methods to connect with the GOT to ensure compliance with the EMC Directive.

○ : Compliant with EMC Directive × : Not compliant with EMC Directive

Connection method*1	GT14 Handy
Direct connection to CPU	○
Computer link connection	×
CC-Link connection (via G4)	×
CC-Link connection (via GT11H(S)-CCL)	×
Ethernet connection	○
GOT multi-drop connection	×
Other connections	○ *1

*1 When connecting the GOT to other controllers as a PLC manufactured by other company, create the cable (by the user) and configure the system to meet the EMC Directive specifications for the connected device.

POINT

(1) System configuration
GT14 Handy conforms to the EMC Directive only when used in the connection type above, via connector conversion box.

(2) Connected devices
If connecting to the PLC or microcomputer other than Mitsubishi products (MELSEC-Q series, MELSEC-L series, MELSEC-QnA , MELSEC-A series or MELSEC-FX series) please refer to the EMC Directive compliance manual for that specific device.

■ About the cable used

Any device which utilizes a data communication function is susceptible to the wider effects of local EMC noise. Therefore, when installing any communication cables care should always be taken with the routing and location of those cables. The GOT identified on the previous page are compliant with the EMC requirement when the following communication cables are used.

(1) External cable
GT14H-C30-42P, GT14H-C60-42P, GT14H-C100-42P
GT11H-C30-37P, GT11H-C60-37P, GT11H-C100-37P (Ver.C or later)

(2) Direct connection cable

Existing Cables	User Made Cables
GT01-C30R4-8P GT11H-C30R2-6P	The cable need to be independently tested by the user to demonstrate EMC compatibility when they are used with the GOT, the PLC of MELSEC-Q series, MELSEC-L series, MELSEC-QnA, MELSEC-A series and MELSEC-FX series.

(3) Ethernet connection cable
Shielded twisted pair cable (STP)

(4) PLC (manufactured by other company), microcomputer, temperature controller, inverter, servo amplifier, CNC, MODBUS(R)/RTU or MODBUS(R)/TCP connection
Produce the cable (RS-232 cable, RS-422 / 485 cable) for connecting the GOT to a controller with reference to the following manual.

☞ GOT1000 Series Connection Manual for GT Works3 and a controller used

5.2.3 Precautions for Wiring/Connecting the EMC Directive-Compliant Product

Wire and connect GOT1000 series equipments as instructed below. If the GOT1000 series equipments are configured in a way different from the following instructions, the system may not comply with EMC directives.

■ Power and ground wires wiring method

(1) Power and ground wires wiring method

Connect the power wire and connection cable as shown in the illustration, and be sure to attach a ferrite core (TDK Corporation type ZCAT3035-1330) within the range shown below.

Lead the power wire and ground wire as shown in 5.2.1 ■ Control panel (2).

Be sure to ground the FG cable, and protective ground cable.

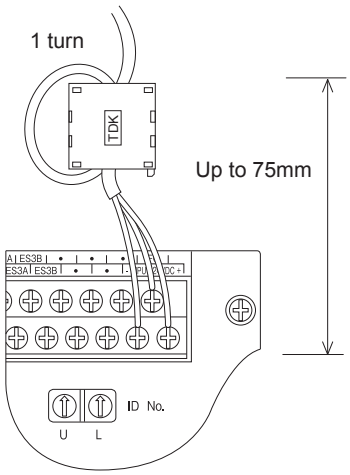

Connector Conversion Box

POINT

Configure the system to meet the EMC Directive specifications for the connected device when connecting the GOT to a controller.

The following gives the instructions to ensure the machinery comply with the EMC Directive. However, the manufacturer of the machinery must finally determine how to make it comply with the EMC Directives: if it is actually compliant with the EMC Directives.

(a) For RS-422 / 485 cable

- Each signal wire (excluding SG and FG) should be made into a two power wires and connected, then twisted.

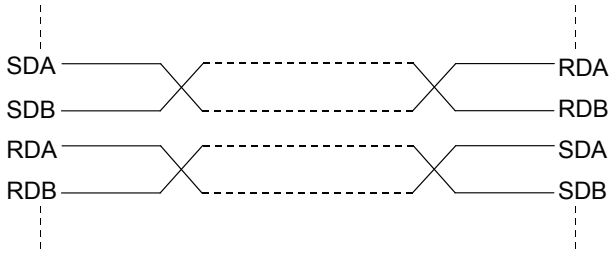

- Make the SG wire more than two wires and connect.

(b) For RS-232 cable

- Use a twisted pair style for each signal wire (except SG, FG) with SG.

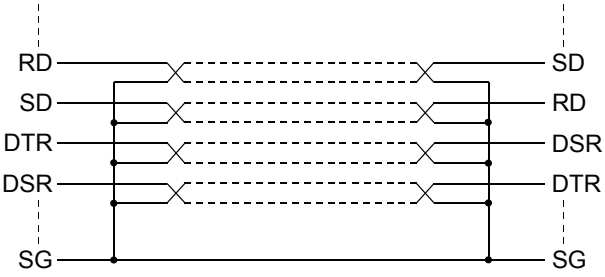

- Attach the ferrite core to the cable in the position as illustrated below.

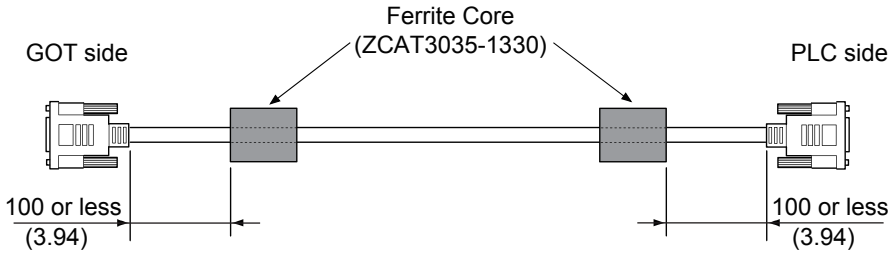

Unit : mm (inch)

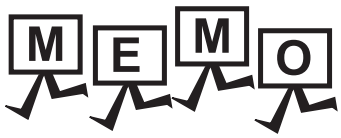
MEMO

6. OPTION

6.1 SD Card

The SD card is used to transmit the OS or project data and to save the data of the alarm history function.
Refer to the following for details.

14. FILE DISPLAY AND COPY (PROGRAM/DATA CONTROL)

6.1.1 Applicable SD card

The following SD cards are applicable for GOT.

Model	Description
L1MEM-2GBSD	SD memory card 2GB
L1MEM-4GBSD	SDHC memory card 4GB
-	Commercially-available SD card*1

*1 Some models with the operations checked by our company are usable.
For the operation-checked models, refer to "Operation Check Results of Third Party SD Cards on GT14 Model" (Hime-T-P-0089) separately available, or contact your local distributor.

6.1.2 Installing and removing procedures of the SD card

Install/remove the SD card with the power supply of GOT is OFF or SD card access switch is "OFF".

■ Installing

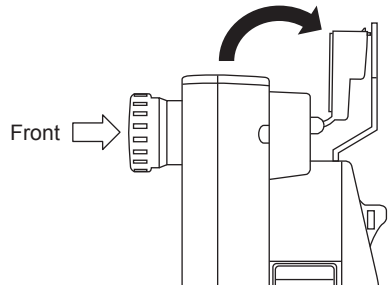

1. Open the interface environmental protection cover in the arrow-pointing direction.

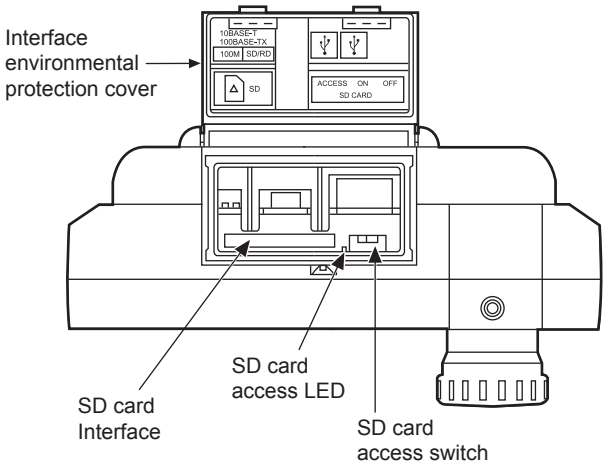

2. Set the SD card access switch of the GOT to "OFF", and make sure that the SD card access LED turns off.
When the SD card access LED turns off, the SD card can be installed even during the GOT power on.

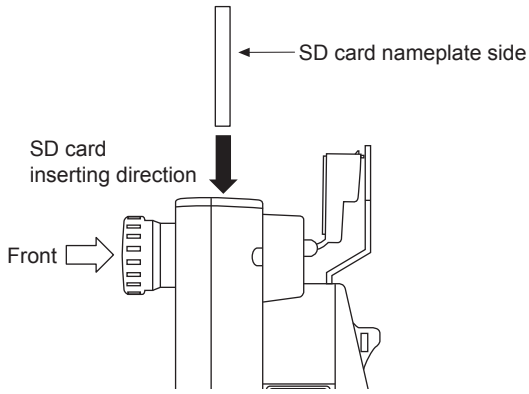

3. To install the SD card to the GOT, insert the SD card into the SD card interface with its front side outside.

4. Turn the SD card access switch on.
After the SD card access switch is turned on, the SD card can be used.

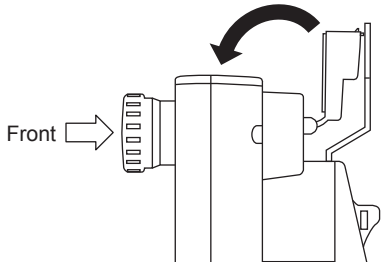

5. Close the interface environmental protection cover.

■ Removing

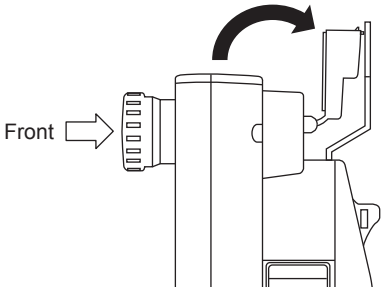

1. Open the interface environmental protection cover in the arrow-pointing direction.

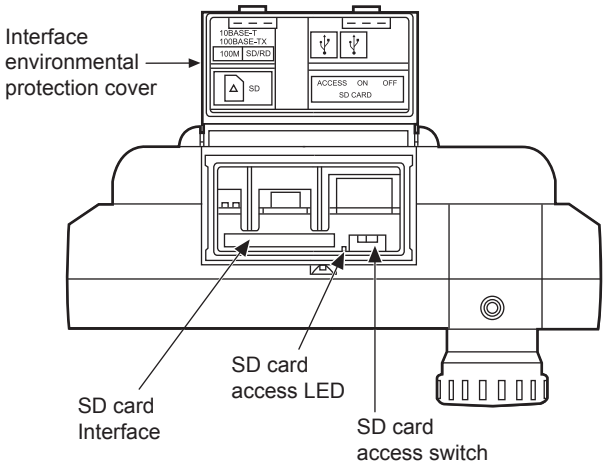

2. Set the SD card access switch of the GOT to "OFF." Make sure that the SD card access LED turns off.
When the SD card access LED turns off, the SD card can be installed or removed even during the GOT power on.

3. Push-in the SD card all the way inside and leave your finger, then remove the SD card.

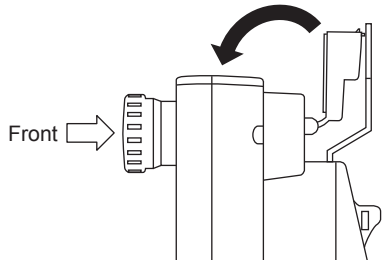

4. Close the interface environmental protection cover.

POINT

Precautions for removing the SD card

(1) While the SD card access LED is on, do not install/remove the SD card or power off the GOT.
To do so may cause data corruption or malfunction.

(2) When ejecting the SD card, support it by hand since it may pop out.
Failure to do so may cause a fall of the SD card leading to failure or damage of the card.

6.2 USB Memory

The USB memory is used to transmit the OS or project data and to save the data of the alarm history function.
For details, refer to the following.

☞ 14. FILE DISPLAY AND COPY (PROGRAM/DATA CONTROL)

6.2.1 Applicable USB memory

The following USB memories are applicable for GOT.

Model	Description
-	Commercially-available USB memory*1

*1 Some models with the operations checked by our company are usable.
For the operation-checked models, refer to "List of valid devices applicable for GOT 1000 series" (GOT-A-0010) separately available, or contact your local distributor.

6.2.2 Installing and removing procedures of the USB memory

1. When USB memory is accurately inserted to the USB interface, the GOT automatically recognizes it.
Refer to the following for removing the USB memory.

☞ 14.2.9 USB device status display

6.3 Battery

The battery backs up clock data and data stored in the built-in RAM (D drive) including alarm history, recipe data, time action setting value, advanced alarm, advanced recipe, logging, hard copy, and SRAM user area. A battery is installed to GT14 Handy when the GT14 Handy is shipped from the factory.

6.3.1 Applicable battery

The following battery is applicable for GT14 Handy GOT.

Model	Contents
GT11-50BAT	Battery for clock data, alarm history, recipe data, time action setting value, advanced alarm, advanced recipe, logging, hard copy, and SRAM user area backups

6.3.2 Battery replacement procedure

Periodically replace a battery with reference to “3.4 Battery specifications”.

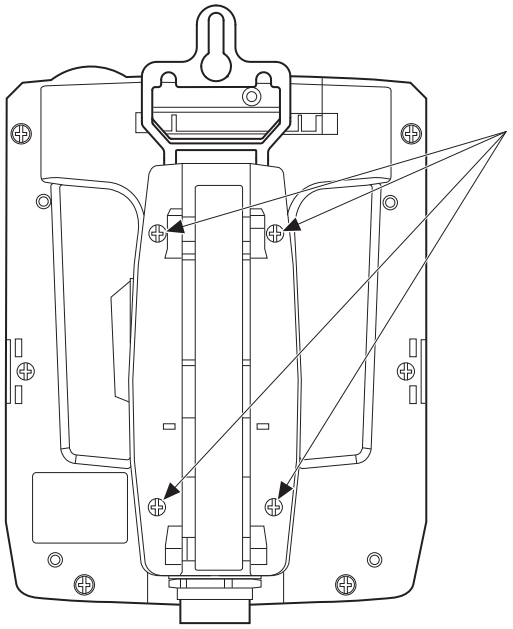

1. After keeping the GOT turned ON more than 10 minutes, turn OFF the GOT.
2. Loosen the environmental protection back cover screws at four points on GOT rear face to remove the cover.

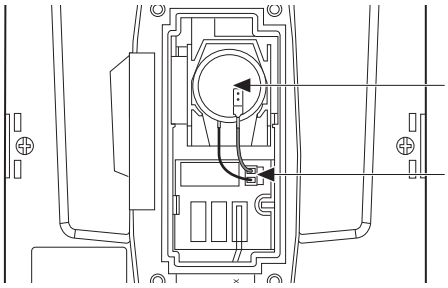

3. Remove the old battery from the holder and disconnect the connecter.

4. Disconnect the old battery connector and insert the new battery connector within 30s.

5. Install the battery to the GOT.

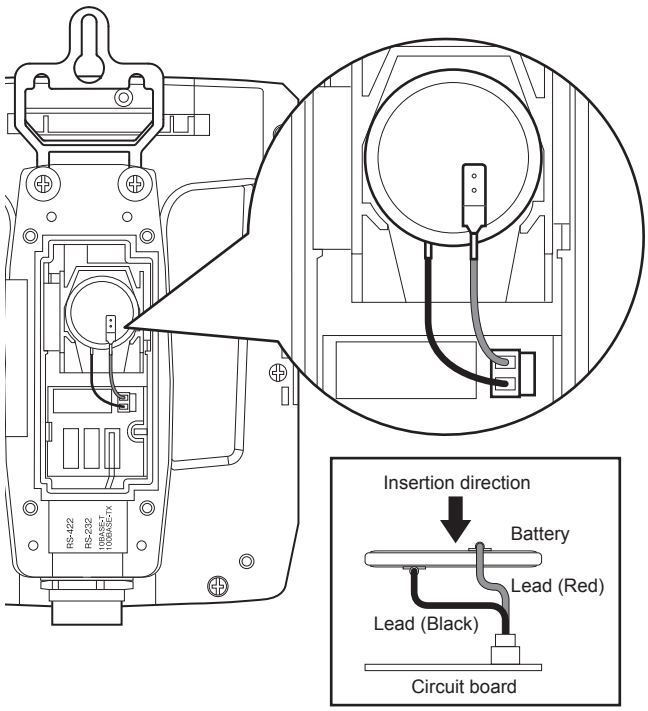

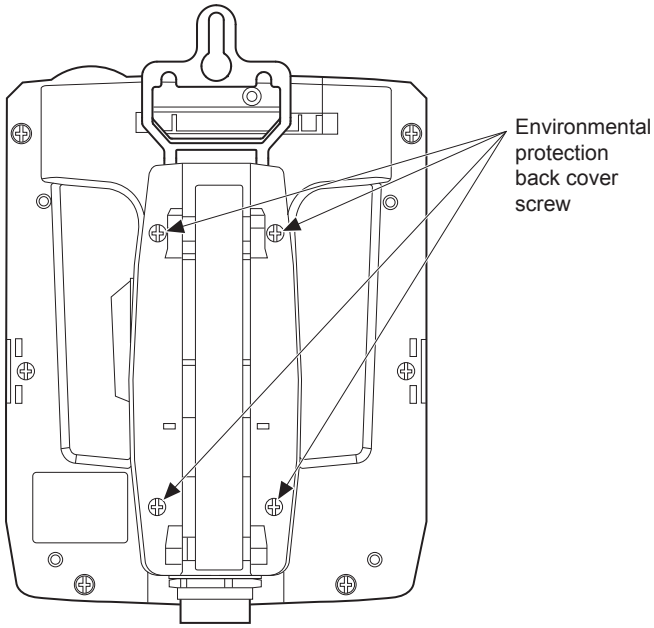

6. Attach the environmental protection back cover and tighten the screws.
Tightening torque: 0.36 to 0.48 N•m
Too much tightening may cause damage.

7. Turn the GOT power on.

8. Check if the battery condition is normal with the utility.
Refer to the following for the details of battery status display.

☞ 12.1 Display Setting

6.4 Protective Sheet

The protective sheet is used to protect the operation surface from damage or dirt when the touch key of GOT display section is operated.
For the Handy GOT, the protective sheet is attached for transportation.
(It is different from the one described in this chapter.)

6.4.1 Applicable protective sheet

Product name	Model	Contents
Protective sheet	GT14H-50PSC	Protective sheet for GOT Clear 5 sheets

6.4.2 Installing procedure

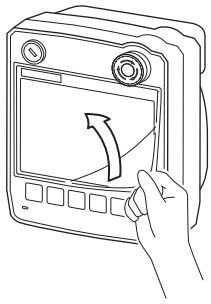

1. If the protective sheet has been already attached to the GOT, remove the old one from the GOT display section holding the lower right corner.
If the protective sheet for transportation is attached to the GOT, remove it too.

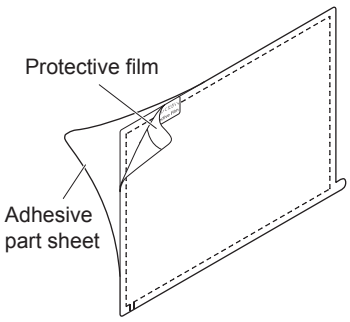

2. Peel the protective films and the adhesive part sheet of a new protective sheet.

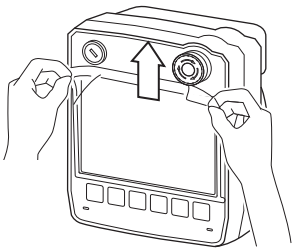

3. Attach the adhesive side to the GOT display section.
When attaching the protective sheet, make sure to fit it on the display section closely without leaving any clearance between them.

POINT

Replacement time of protective sheet

Check the status of the protection sheet visually by to the daily inspection.
The visibility becomes worse when there is too much dirt and cracks, causing malfunction. Proceeds replacement promptly.

6.5 Emergency Stop Switch Guard Cover

The emergency stop SW guard cover is attached to prevent the emergency stop SW from being operated incorrectly.

6.5.1 Applicable emergency stop SW guard cover

The following emergency stop SW guard cover is applicable for the Handy GOT.

Product name	Model	Contents
Emergency stop SW guard cover	GT14H-50ESCOV	Mounting screw (M3 × 6) × 1 (accessory)

6.5.2 Installing procedure

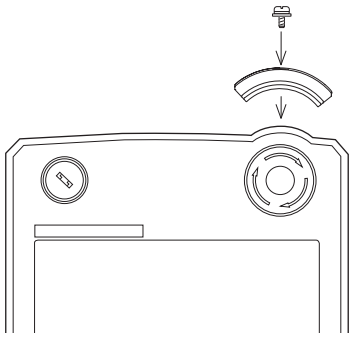

1. Remove the Handy GOT from the device or turn the entire system power off. (Make sure that the device does not operate even if the emergency stop of the Handy GOT is activated while mounting the emergency stop SW guard cover.)
2. Fit the screw holes of the emergency stop SW guard cover into those of the GOT, and fix them with the accessory screw (M3 × 6). (Tightening torque: 0.36 to 0.48 N•m)
   Too much tightening may cause damage.

6.6 Connector Conversion Box

The Connector Conversion Box is used to connect with the external connection devices such as PLC.

6.6.1 Applicable Connector Conversion Box

The following Connector Conversion Box is applicable for the GT14 Handy.

Product name	Model	Contents
Connector Conversion Box	GT16H-CNB-42S	Packing for panel installation × 1 (accessory), Flange for GT10-9PT5S × 1 (accessory) Screws for flange installation (M3 × 8) × 2 (accessory)
	GT16H-CNB-37S	Mounting fixture for panel installation × 1 (accessory) Screws for mounting fixtures for panel installation (M3 × 8) × 3 (accessory)
	GT11H-CNB-37S	Mounting fixture for panel installation × 1 (accessory) Screws for mounting fixtures for panel installation (M3 × 8) × 3 (accessory)

6.6.2 Connector Conversion Box (GT16H-CNB-42S)

■ Specifications

(1) General specifications

Other specifications are the same as Handy GOT.

Item	Specifications				
Operating ambient temperature	0 to 55℃				
Storage ambient temperature	-20 to 70℃				
Vibration resistance	When installing DIN rail	Frequency	Acceleration	Half-amplitude	Sweep Count
		5 to 8.4Hz	-	1.75mm	10 times each in X, Y and Z directions
		8.4 to 150Hz	$4.9m/s^2$	-	

(2) Power supply specifications

Other specifications are the same as Handy GOT.

Item		Specifications
Input power supply voltage		DC24V (+10% -15%)
Power consumption		10.6W or less (440mA/24VDC) (When including the consumption current of GT1455HS-QTBDE) 9.6W or less (400mA/24VDC) (When including the consumption current of GT1450HS-QMBDE)
	Connector Conversion Box only	2.2W (90mA/24VDC) (When excluding the consumption current of Handy GOT)
Inrush current		25A or less (at max. load) 2ms
Permissible instantaneous power failure time		Within 5ms

(3) Internal relay contact specifications

Item	Contact rating	Specifications
Operation switch SW1 to SW6	10mA/24VDC (resistance load only)	Each contact coordinates the operation switch status of Pressed (close)/Not pressed (open). When the external cable is not connected, contacts are always open regardless of the switch status.
Emergency stop switch ES1A to ES3A	1A/24VDC (resistance load) 0.3A/24VDC (induction load)	Each contact coordinates the emergency stop switch status of Pushed (open)/Return (close). When the external cable is not connected, contacts are always open regardless of the emergency stop switch status. Causing a short circuit of the ES ☐ B terminal which is close to the ES ☐ A terminal by a short pin (prepared by user) enables to set each contact in the close status even if the external cable is not connected.*1 ☞ 9.4.5 Emergency stop switch wiring When using the short-circuited ES ☐ B terminal which is close to the ES ☐ A terminal • Contacts are normally operated in the close status. When pushing the emergency stop switch, the contacts become open. • In the following situations, contacts are closed regardless of the status of the emergency stop switch and the external cable. - When GT16H-CNB-42S is turned OFF - When GT16H-CNB-42S is not supplied with the power supply (DC24V).
Grip switch DSW1, DSW2	1A/24VDC (resistance load) 0.3A/24VDC (induction load)	Each contact coordinates the grip switch status of Pressed (close)/Not pressed (open). When the external cable is not connected, contacts are always open regardless of the grip switch status.
Keylock switch (2-position switch) KSWC, KSW1, KSW2	1A/24VDC (resistance load) 0.3A/24VDC (induction load)	Each contact coordinates the position of the keylock switch. • When the key is on the left: KSW1 and KSWC are short-circuited. • When the key is on the right: KSW2 and KSWC are short-circuited. When the external cable is not connected, contacts are always open regardless of the keylock switch.

*1 The system may not match the safety standards. Before using the system, please check the safety standards which are required.

■ External dimensions and part names of the connector conversion box (GT16H-CNB-42S)

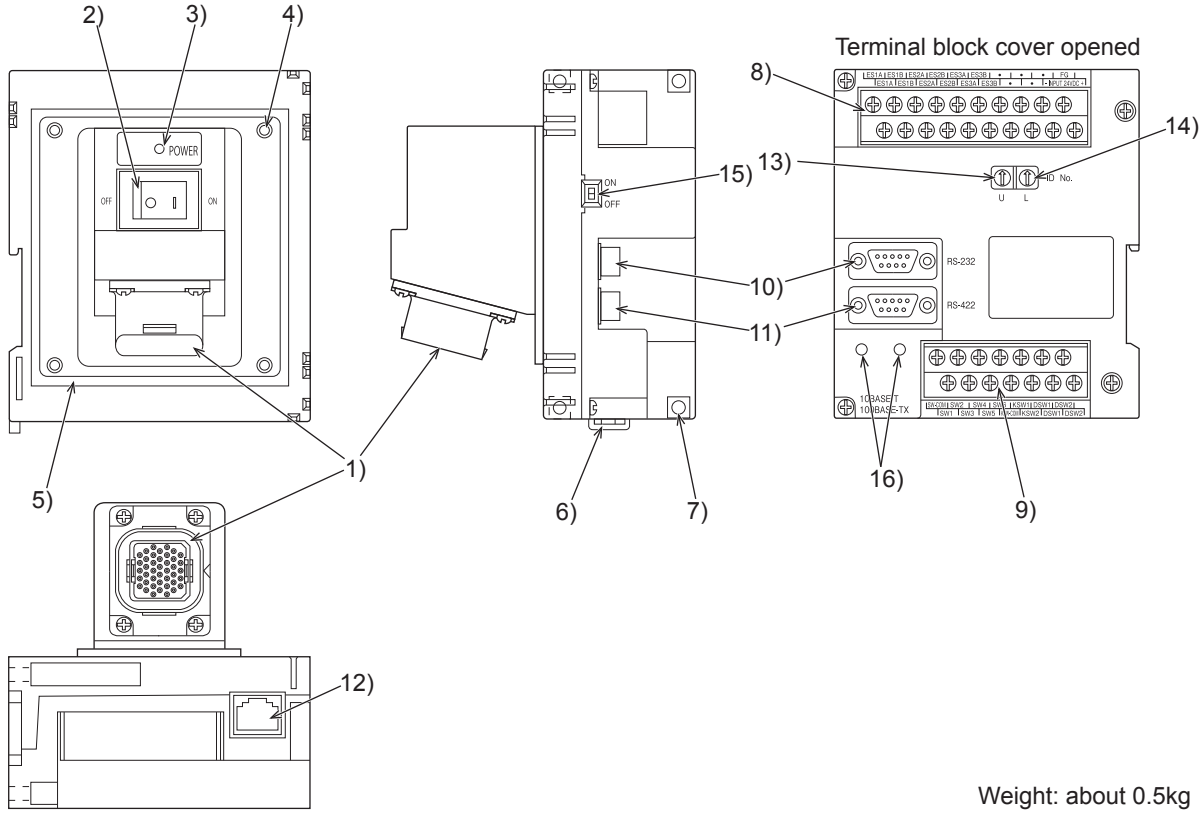

Weight: about 0.5kg

No.	Name	Specifications
1)	Connector for Handy GOT (42pin, female type)	Connects a Handy GOT through an external cable.
2)	Power switch	Supplies the power to the Handy GOT. When this switch is set to ON, the power is supplied. Turn off the power when attaching or detaching the Handy GOT.
3)	POWER LED	Lit in green: Power is correctly supplied. Not lit: Power is not supplied.
4)	Hole for the panel installation	Used when mounting the panel. For M4 screw, depth 6mm
5)	Packing attachment chase	Used when mounting the panel.
6)	Hook for DIN rail	Used for fixing the Connector Conversion Box when mounting DIN rail (35mm).
7)	Hole for the screw installation	Used for fixing on the board, etc. For M4 screw
8)	Terminal block 1)	Connects the GT16H-CNB-42S, the 24VDC power supply of Handy GOT and the emergency stop switch (ES-1 to 3) with M3 terminal screw and the cover.
9)	Terminal block 2)	Connects the operation switch of the Handy GOT (SW1 to 6), the grip switch (DSW-1, 2) and the keylock switch (KSW-1, 2) with M3 terminal and the cover
10)	External connection device communication connector (RS-232: D-Sub 9pin male) connector model name: JES-9P-2A3A (JST) or equivalent	Cannot be used. When the GT14 Handy is used in the RS-232/RS-422 connection, use the connector conversion box GT11H-CNB-37S. ☞ 6.6.3 Connector Conversion Box (GT11H-CNB-37S)
11)	External connection device communication connector (RS-422/485: D-Sub 9pin female) connector model name: 17JE-13090-37D23A (DDK) or equivalent	
12)	External connection device communication connector (Ethernet: RJ-45 module jack)	Connects the external connection device via Ethernet with using a LAN cable.
13)	Rotary switch (U)	Sets the ID number of GT16-CNB-42S. Sets one ID number with using both rotary switches (U) and (L).
14)	Rotary switch (L)	
15)	ID number valid/invalid selection switch	Enables the recognition function of ID number (ON=Valid, OFF=Invalid). When connecting the external connection device with using 10) and 11), set OFF (invalid).
16)	Hole for the flange installation	Used for fixing the flange when using the connector conversion adapter.

■ External dimensions of the connector conversion box (GT16H-CNB-42S)

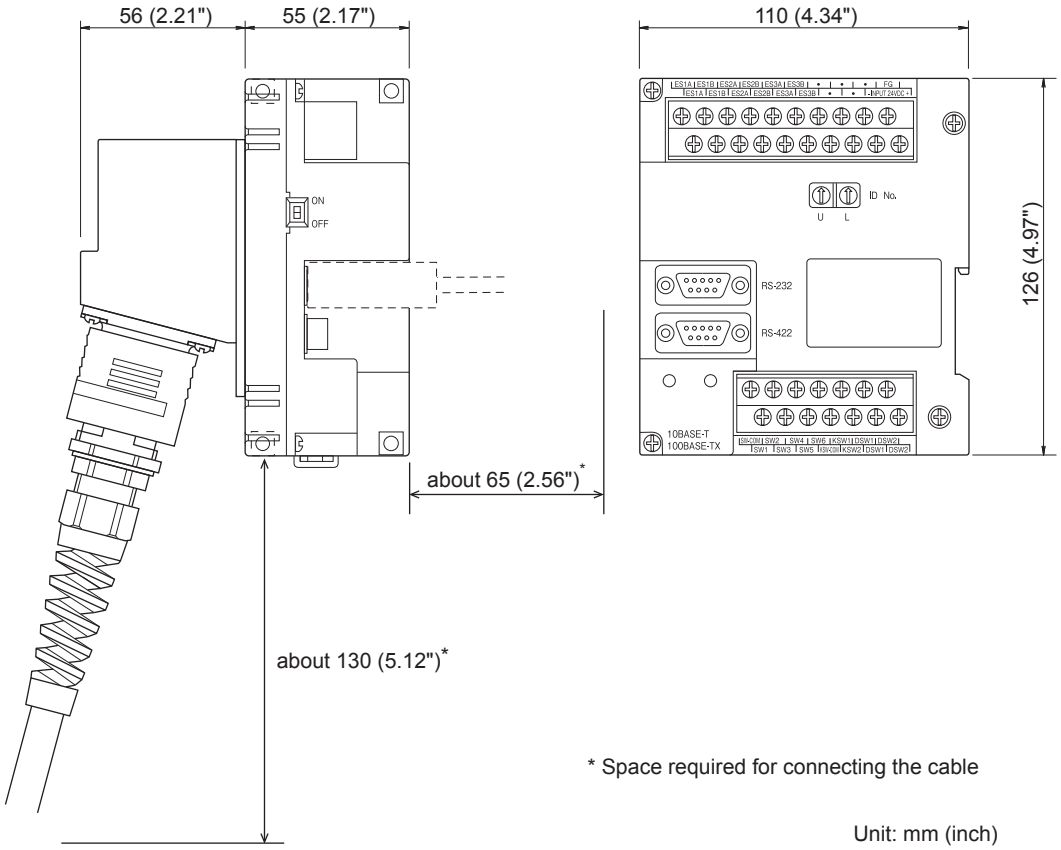

* Space required for connecting the cable

Unit: mm (inch)

■ Installation of the connector conversion box (GT16H-CNB-42S)

The Connector Conversion Box can be installed on the panel face directly or on the DIN rail.

(1) Mounting on the panel face
(When setting the connector for Handy GOT connection and the power supply switch on the panel surface)

(a) Direct mounting on the panel face
Drill a mounting slot of the following size on the panel face.

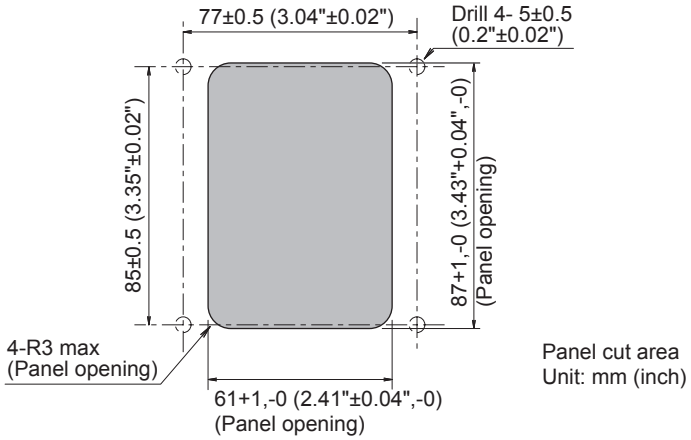

(b) Installation of the packing
Install the accessory packing to the packing attachment chase of the Connector Conversion Box.
Be sure to install the packing.

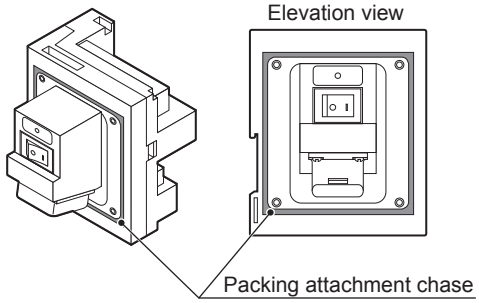

(c) Mounting on the panel face
Fit the Connector Conversion Box from the back side of the panel face, and fix it with four M4 screws (prepared by user).
In the Connector Conversion Box, thread of M4, 6 mm in depth is cut in each mounting hole.
Prepare four M4 mounting screws separately while considering the thickness of the panel face.
Tighten the mounting screw with the specified torque. Tightening screws too much may cause damage.

Tightening torque	0.69 to 0.88 N•m

Make sure that interfering objects are not located within 65 mm from the rear face so that the connector of a PLC cable is not hindered.
Also, make sure that interfering objects are not located within 25 mm from the upper side so that the terminal block is not hindered.
Make sure that interfering objects are not located within 50 mm from the lower side so that the Ethernet port and terminal block are not hindered.

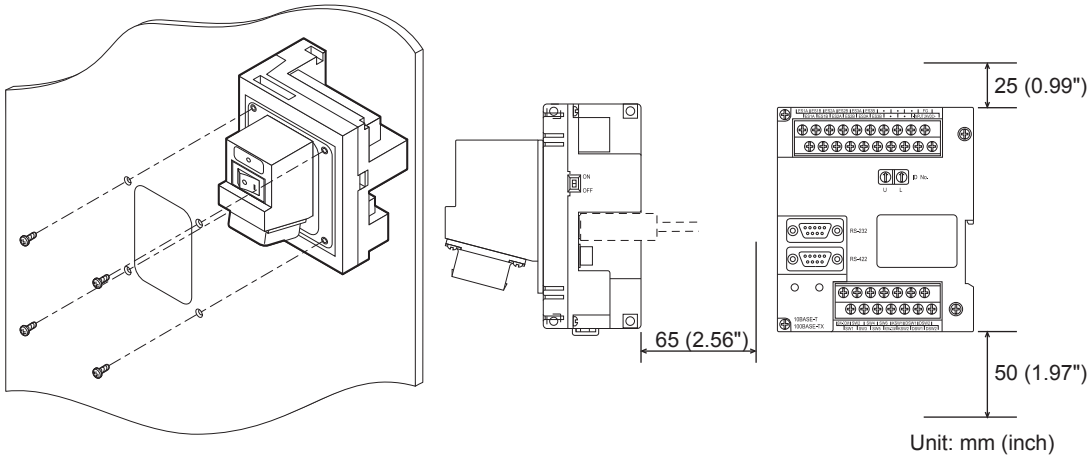

(2) Mounting on the panel face
(When installing the Connector Conversion Box on the panel surface)

(a) Direct mounting on the panel face
Drill a mounting slot of the following size on the panel face.

(b) Mounting on the panel face
Install the Connector Conversion Box on the panel face (mounting surface).
Tighten the mounting screw with the specified torque. Tightening screws too much may cause damage.

Tightening torque	0.69 to 0.88 N•m

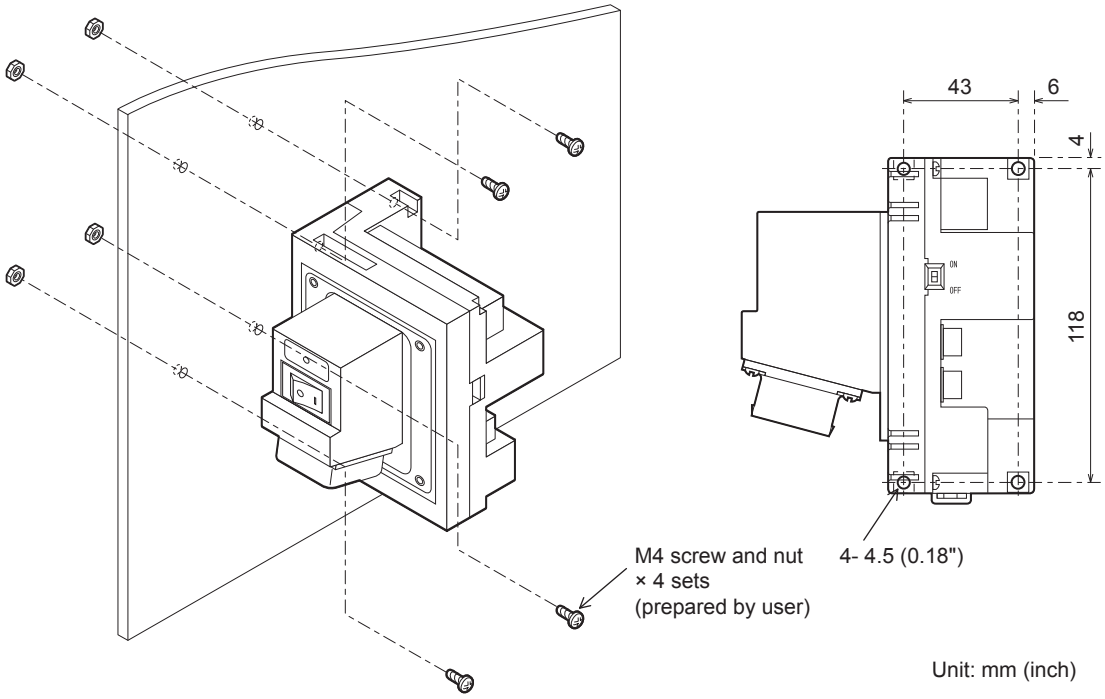

Unit: mm (inch)

(3) Installation on the DIN rail.
Install the Connector Conversion Box on the DIN rail with using its DIN rail hook

Applicable DIN rail	DIN46277 (width: 35mm)

The clearance between screws for installing the DIN rail should be 150 mm or less.

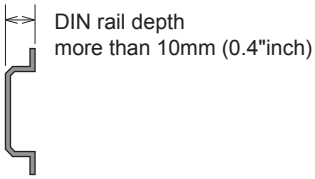

1) Pull out the hook for DIN rail.

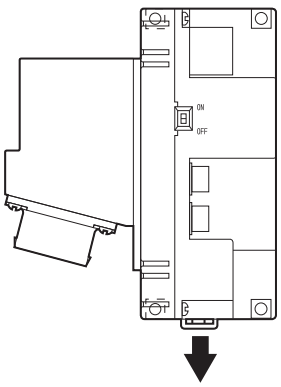

2) Adapt the upper side of the DIN rail installation slot to the DIN rail.

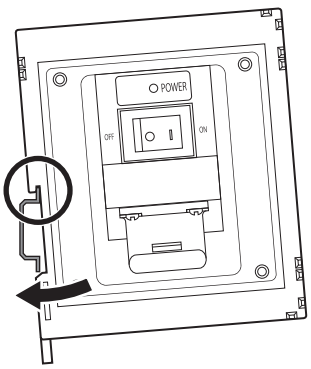

3) Lock the hook for DIN rail while forcing the product on the DIN rail.
When installing the DIN rail, please fix the cables. Otherwise, the hook for DIN rail and other parts may be damaged by the cable load.

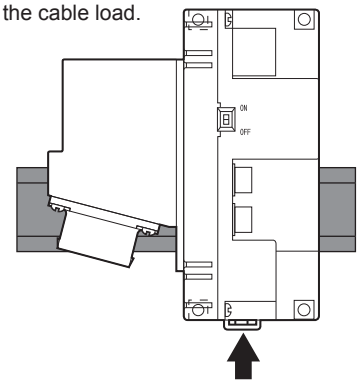

■ Wiring to the connector and the terminal block

(1) Pin assignment and signal names

The 42-pin connector of the external cable is converted to the PLC connection connector (module jack) and the following terminal block.

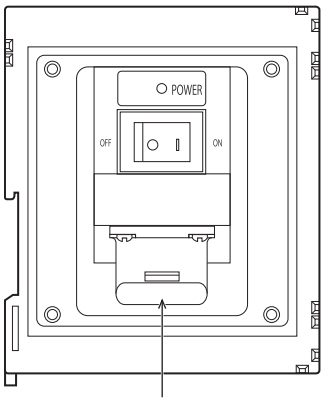

Connector for Handy GOT
42pin Connector female

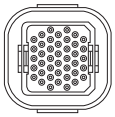

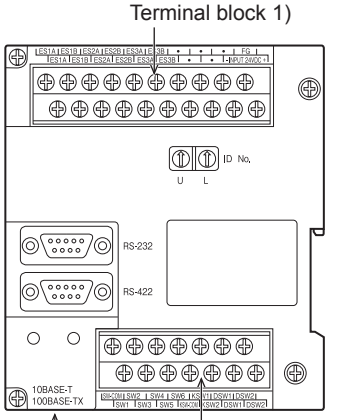

External device
communication connector

Terminal block 2)

Ethernet

RJ-45

(a) Terminal block 1) , 2)

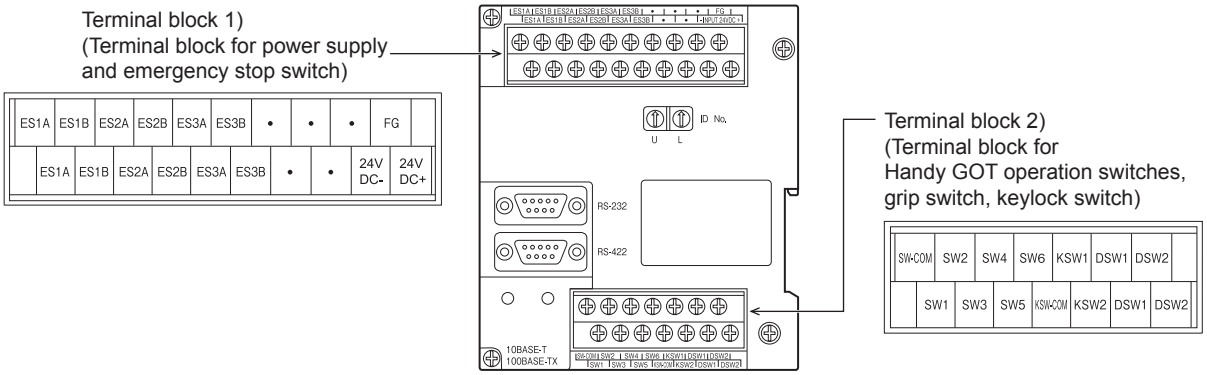

GT16H-CNB-42S		Application
Terminal block 1)		
Terminal No.	Signal name	
1	24VDC+	24VDC power supply "+"
2	FG	Frame ground
3	24VDC-	24VDC power supply "-"
4	-	Disable
5	-	
6	-	
7	-	
8	-	
9	ES3B	For Emergency stop switch
10	ES3B	
11	ES3A	
12	ES3A	
13	ES2B	
14	ES2B	
15	ES2A	
16	ES2A	
17	ES1B	
18	ES1B	
19	ES1A	
20	ES1A	

GT16H-CNB-42S		Application
Terminal block 2)		
Terminal No.	Signal name	
1	SW-COM	For Operation switch
2	SW1	
3	SW2	
4	SW3	
5	SW4	
6	SW5	
7	SW6	
8	KSW-COM	For Keylock switch
9	KSW1	
10	KSW2	
11	DSW1	For Grip switch
12	DSW1	
13	DSW2	
14	DSW2	

(2) Wiring to the terminal block

Terminal screws are M3. Wire as described below.
Do not tighten the terminal screws within the specified torque.
Doing so can cause a failure or malfunction.

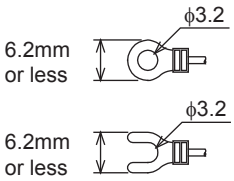

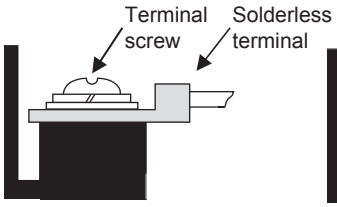

When wiring one cable to one terminal

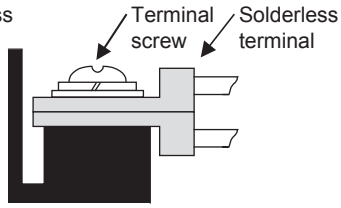

When wiring two cables to one terminal

Wire size	For power supply: 0.75mm^2 or more For grounding: 2mm^2 or more
Solderless terminal	Solderless terminal for M3 (Applicable solderless terminal: RAV1.25-3, V2-N3A, FV2-N3A)
Tightening torque	0.5 to 0.8N•m

(3) Installing and removing of external cable

When installing or removing the external cable from the Connector Conversion Box, make sure that the power switch is turned OFF.
Connect the external cable with the Connector Conversion Box in the same procedure as connecting the external cable with Handy GOT.
Refer to the following.

☞ 8.2.4 Installing and removing of external cable

■ ID recognition function

GWhen connecting with controllers such as PLC via Ethernet, GT14 Handy can acquire ID number which is set by the rotary switch of the Conversion Box of the connection target. ID number can be used as information for switching the station number.

By storing the ID number obtained using the status observation function or the script function to the station No. switching device, the specified connected equipment can be monitored only by connecting the Conversion Box without specifying the station No. of the PLC.

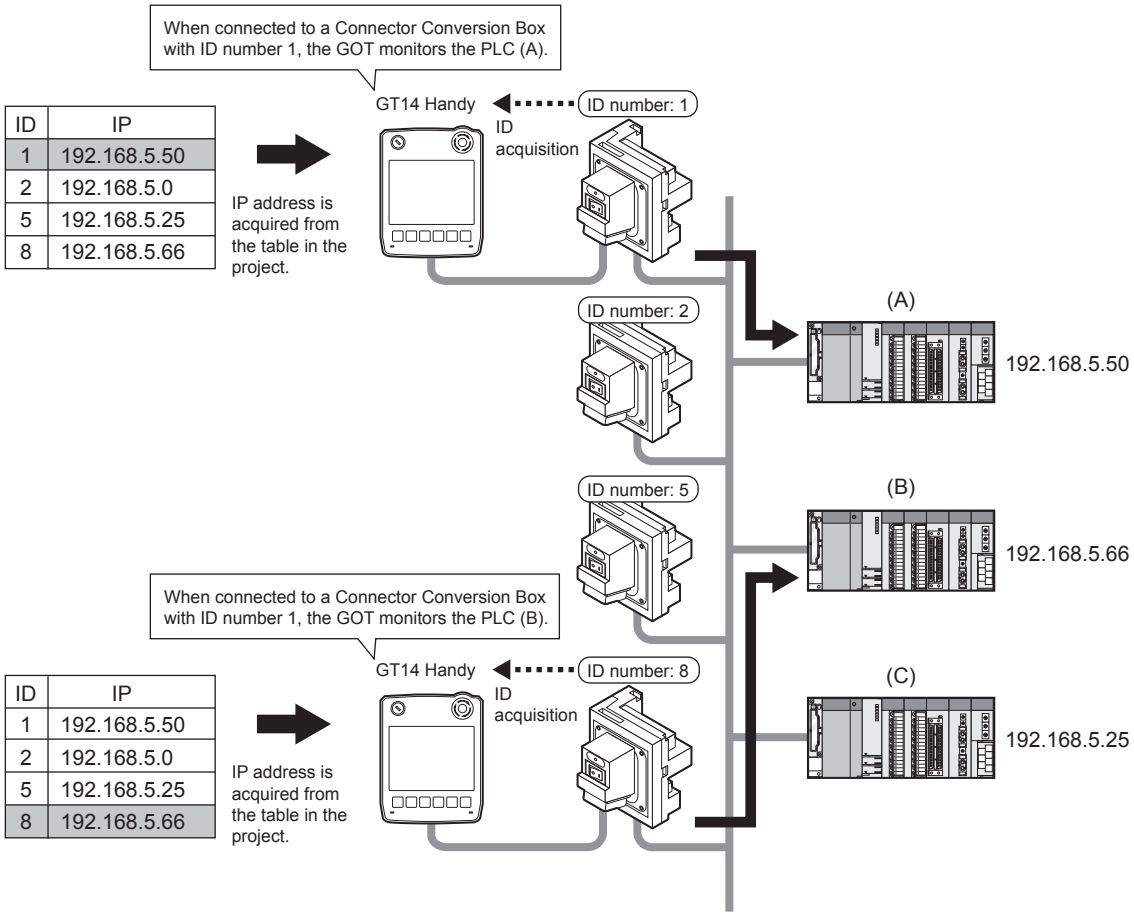

For details of the switching the station number, refer to the following.

GT Designer3 Version1 Screen Design Manual (Fundamentals)
4.10 Station No. Switching Device Setting

POINT

How to use the ID number recognition function

- GT14 Handy acquires the ID number by using the RS-232 interface built in the GT14 Handy to connect with the connector conversion box via "MODBUS/RTU" connection.
- Only when GT14 Handy connects with the connected equipment via Ethernet, the ID recognition function is available.
- Although GT14 Handy does not support the multi-channel function including both the RS232 connection and the Ethernet connection, GT14 Handy can use the "MODBUS/RTU" connection and the Ethernet connection for only when the ID recognition function is used.

(1) Setting the ID number

Set the ID number with the rotary switch of the Connector Conversion Box. Setting range is 0 to 255 (FFH).
Set the second digit of the hexadecimal with "U", and the first digit of the hexadecimal with "L".
After setting the ID number, turn the ID number valid/invalid selection switch to valid (ON).

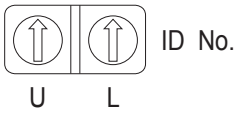

(2) GOT side settings

Set the RS-232 communication interface of the Handy GOT.
Set the Ethernet interface according to the connected equipment to be monitored.

1. Set the PLC communication cable connector of the Handy GOT to the Ethernet side and set the PLC communication interface to Ethernet.

2. Install the communication driver [MODBUS/RTU] in addition to the Ethernet communication driver to be used to communicate with the connected equipment.

3. Make the connected equipment settings of the RS-232 interface.
Select [MODBUS/RTU] as the communication driver and set the followings in the connected equipment detailed setting.

Item	Set value
Transmission speed	19200bps
Data bit	8bit
Stop bit	1bit
Parity	Even
Host address	1
32bit order	LH Order

(3) Reading the ID number

ID number can be read to Handy GOT by connecting Handy GOT to the Connector Conversion Box.
Handy GOT can acquire ID number by reading the input register "300001".

POINT

Switching the station number

The connected equipment, whose station No. corresponds to the ID number, can be monitored by using the status monitoring, script to store the value read from the input register "300001" in the station number switching device.

HINT

Example of the station No. switching setting procedure using the ID recognition function of the connector conversion box.

The following shows an example of the station No. switching setting procedure using the ID recognition function of the connector conversion box. Here, an example to set the station No. switching device value using the status observation function is explained.

1. Set the ID number of the connector conversion box.
The ID number of the connector conversion box will be the PC No. of the PLC to be monitored.

(1) Setting the ID number

2. Switch the serial communication interface of the Handy GOT.
Open the environment protection cover on the back of the main unit and connect the PLC communication cable connector to the Ethernet connector to establish the Ethernet communication.
Configuring the setting above enables the communication with the connector conversion box as well.

3. Install the communication driver to the handy GOT.
Install the Ethernet communication driver to be used in the communication with the controllers and the MODBUS/RTU communication driver to be used in the communication with the connector conversion box to the handy GOT.

(2) GOT side settings

4. Make the controller settings of the project data to be transferred to the handy GOT.
   - Controller setting
   Make the settings to connect the GOT to Ethernet.

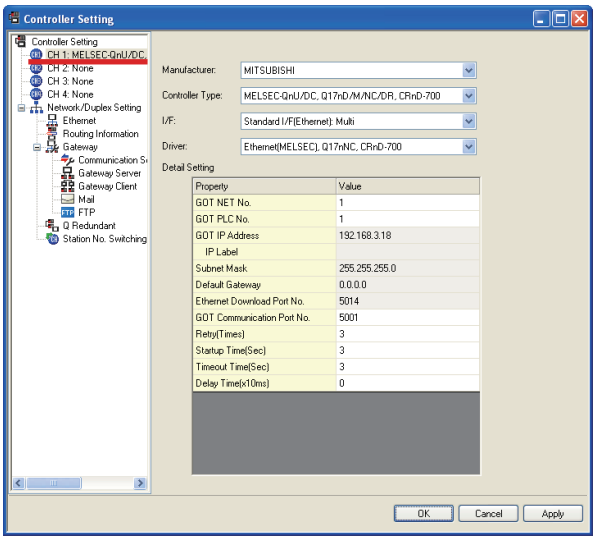

Make the MODBUS/RTU communication settings using RS232 to connect the GOT to the connector conversion box.

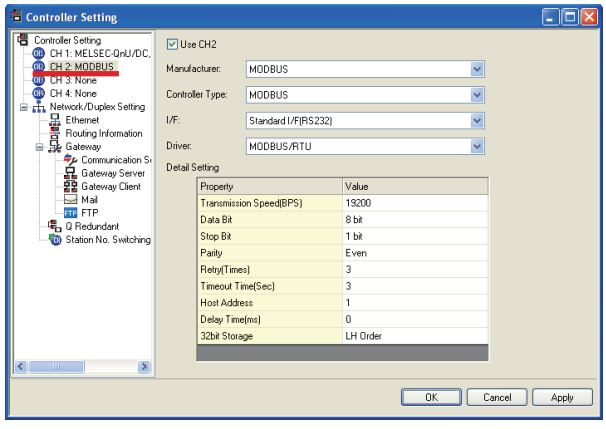

- Ethernet setting
  Set all PLCs which the GOT may be connected to via Ethernet.
  Here, an example when [N/W No.] is fixed to 1 is explained.

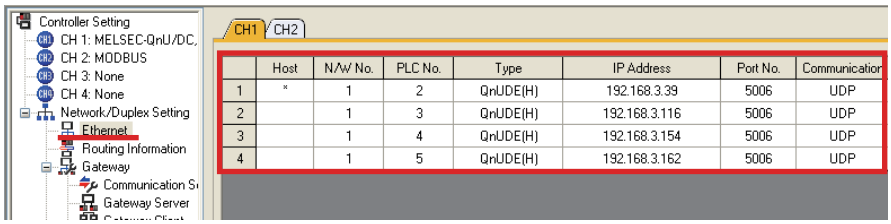

- Station No. switching device setting
  Tick the check box of [Use Station No. Switching] to set the device specifying the station No. of the connected PLC.
  Here, an example when the GOT internal device GD500 is set is explained.

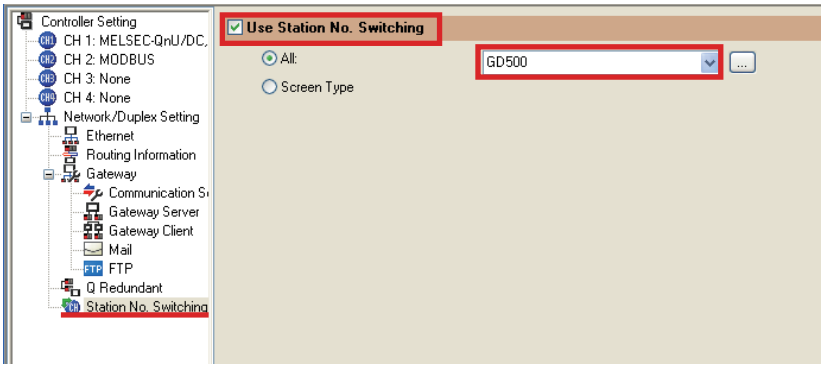

5. Set the status observation function.
   - Operation trigger setting
     Set the GOT internal device GB40 (always ON during the GOT operation) as the conditional trigger of the status observation function.

(1) If [Common] → [Status Observation...] from the menu is selected, the Status Observation dialog box is displayed.

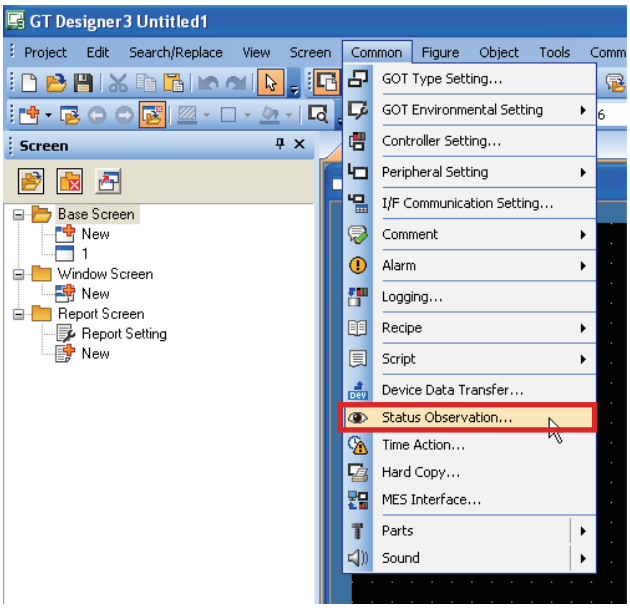

(2) Set [Ordinary] to Observation Cycle in the Project tab and click [Add...].

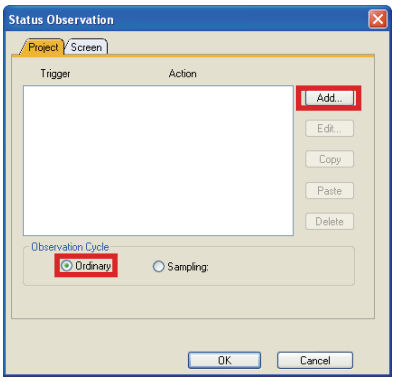

(3) Set [ON] and [GB40] to Trigger 1 in the Trigger tab.

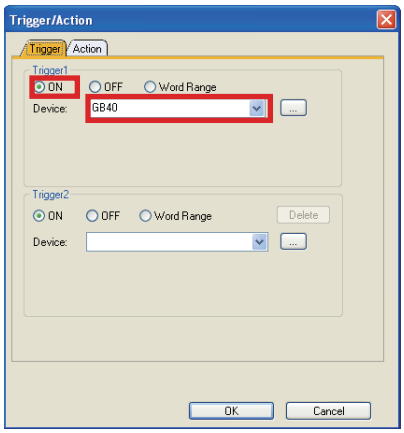

- Operation setting
  Store the rotary switch value into the station No. switching device (GD500).
  The station No. switching device value is an unsigned 16bits data where the upper 8bits are the network No. and the lower 8bits are the PC No.

(1) Set [Data Set 16bit] to [Action] and [Unsigned BIN] to [Data] in the Action tab.

(2) Set a station No. switching device [GD500] to [Device].

(3) To set the rotary switch value of the connector conversion box, tick the check box of [Indirect] and click the […] button to display the Select CH No. window.

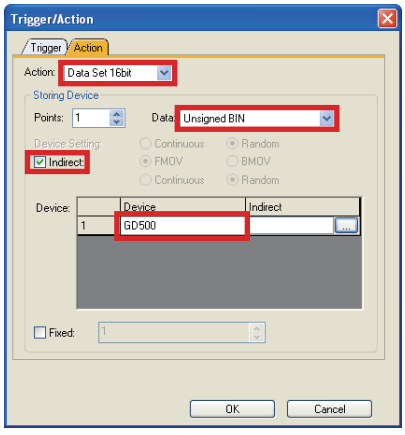

(4) Click MODBUS in the Select CH No. screen to open the device setting window of MODBUS.

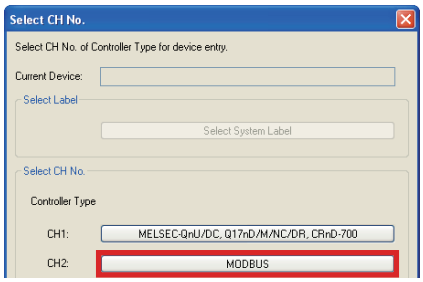

(5) Input "3-00001" to Device. Select [Host] for Network. Click the [OK] button when settings are completed. "3-00001" is a fixed register to access to the rotary switch of the connector conversion box by the MODBUS communication.

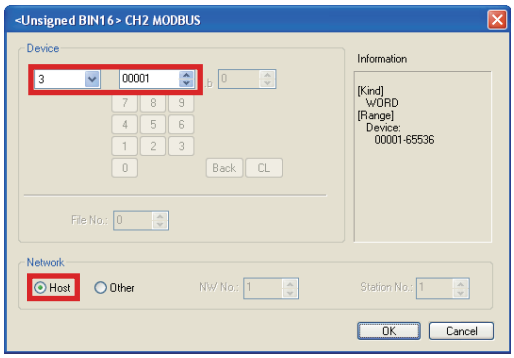

(6) Check that [@2 300001] is displayed at [Device]-[Indirect] in the Action tab.

(7) Tick the check box of [Fixed] and enter "256".
In this example, since N/W No. is fixed to 1, "256" is entered. For fixed values, enter the value of "256×N/W No.". Click the [OK] button when entering is completed

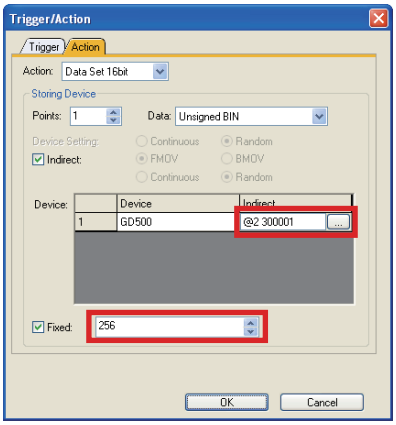

(8) After checking that both Trigger and Action are set, click the [OK] button.

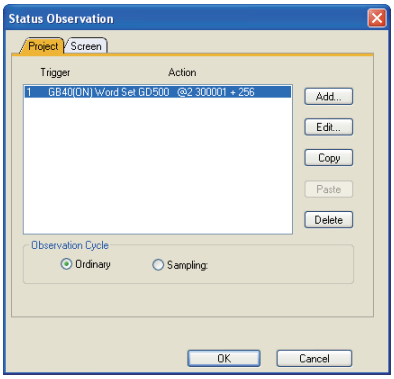

6. Set the project data to use the station No. switching.
When [Screen] → [Screen Property...] is selected, the Screen Property dialog box is displayed.
Tick the check box of [Switch Station No.] in the [Basic] tab.
Perform this operation in all screens where the station No. is switched.

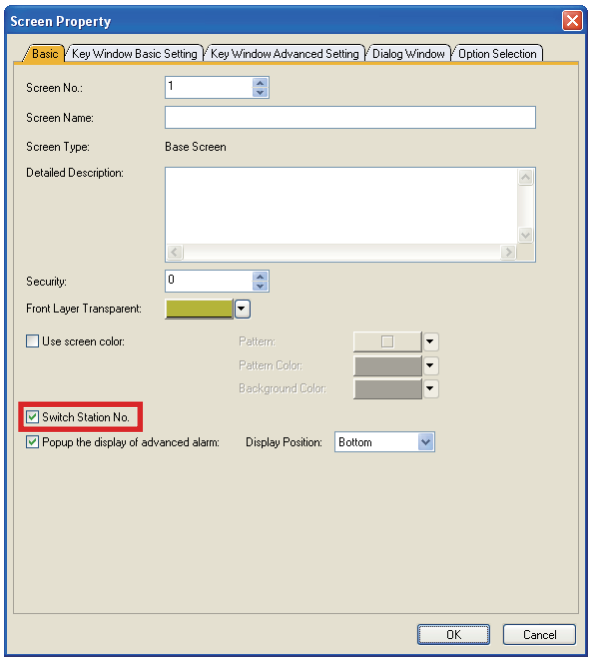

7. Place objects on the screen.
Finally, place objects on the screen.
Select Host to the network device of the objects.
When the station No. switching device value is 0, the host is monitored.

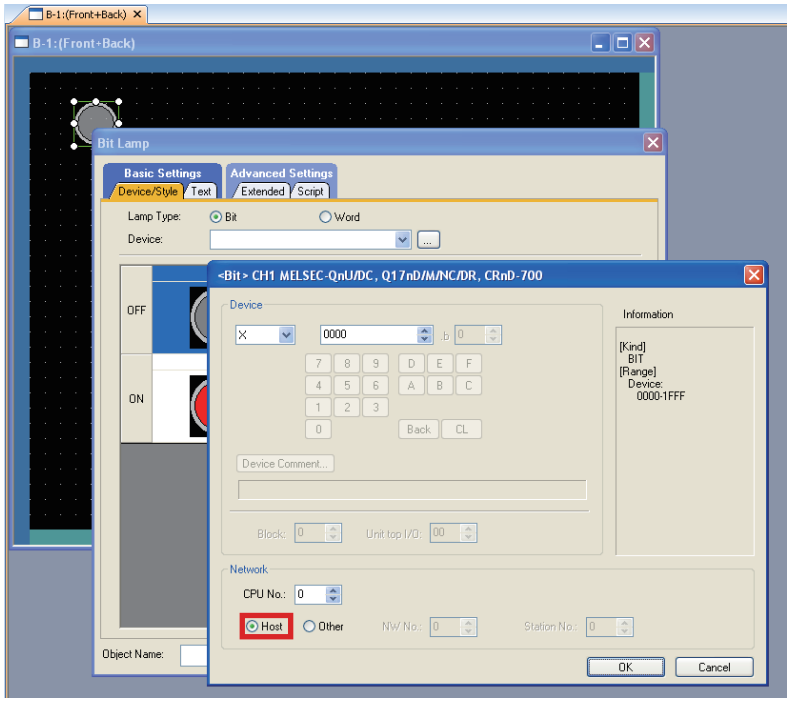

The setting is completed with the above operations. Transfer the project data to the GOT and check the operation.

6.6.3 Connector Conversion Box (GT11H-CNB-37S)

■ Part name and External dimensions

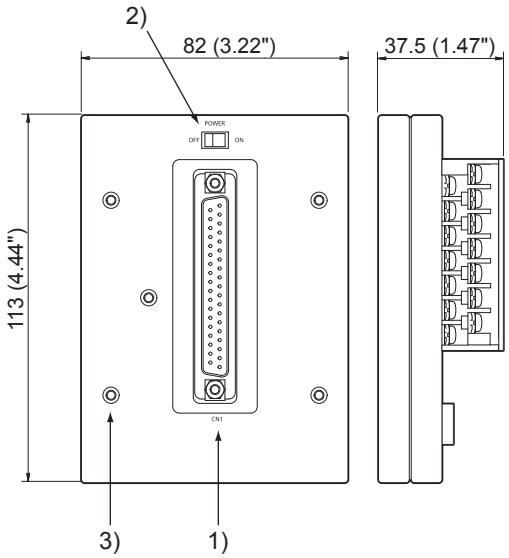

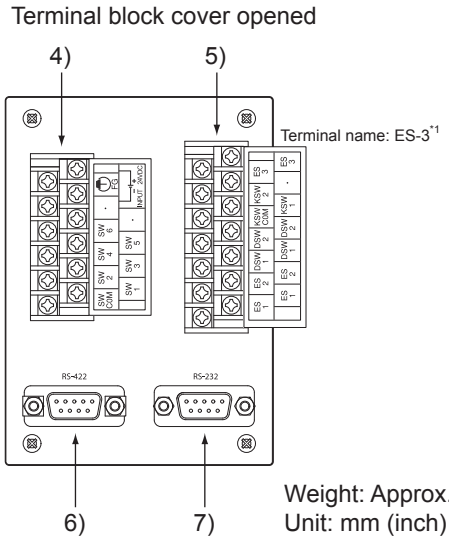

Weight: Approx. 0.17kg
Unit: mm (inch)

No.	Name	Specifications
1)	Connector for Handy GOT (D-Sub,37pin,female type) connector model name: 17JE-13370-37(D23A)-FA (DDK) or equivalent	Connects a Handy GOT through an external connection cable.
2)	Power switch	Supplies the power to the Handy GOT. When this switch is set to ON, the power is supplied. Turn off the power when attaching or detaching the Handy GOT.
3)	Mounting hole (for M3 screw)	Allows to fix the Connector Conversion Box on the panel face directly or through a mounting bracket.
4)	Terminal block for power supply and operation switches	Connects the operation switches and the 24V DC power supply of the Handy GOT.
5)	Terminal block for emergency stop switch, grip switch, keylock switch	Connects the emergency stop switch, grip switch, keylock switch.
6)	Connector for PLC (RS-422: D-Sub, 9-pin, female type) connector model name: 17JE-13090-37D23A (DDK) or equivalent	Connects the PLC through a PLC connection cable. RS-422 and RS-232 are not available simultaneously.
7)	Connector for PLC (RS-232: D-Sub, 9-pin, male type) connector model name: JES-9P-2A3A (JST) or equivalent	

*1 The cable for the ES-3 signal is provided in the connector conversion box GT11H-CNB-37S regardless of whether the terminal name ES-3 is printed on the box or not.

■ Installation

The Connector Conversion Box can be installed on the panel face directly or with mounting bracket offered as an accessory.

(1) Direct mounting on the panel face

Drill a mounting slot of the following size on the panel face.

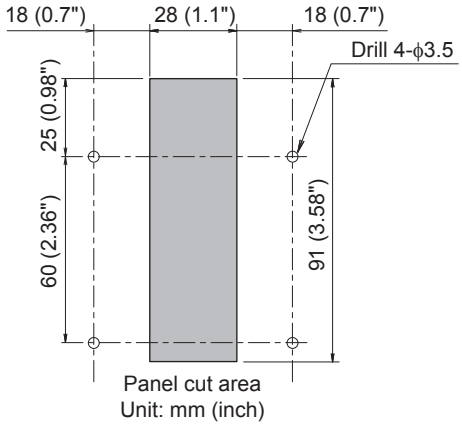

(2) Mounting on the panel face

Fit the Connector Conversion Box from the back side of the panel face, and fix it with four M3 screws (prepared by user).

In the Connector Conversion Box, thread of M3, 6 mm in depth is cut in each mounting hole.

Prepare four M3 mounting screws separately while considering the thickness of the panel face.

Tighten the mounting screw with the specified torque.

Tightening torque	0.49 to 0.68 N/m

Make sure that interfering objects are not located within 100 mm from the rear face so that the connector of a PLC cable is not hindered.

To wire the terminal block, keep a space of 25 mm or more on both sides of the Connector Conversion Box.

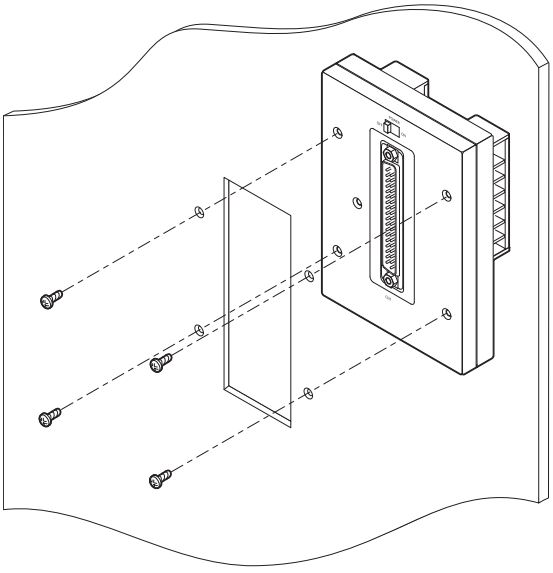

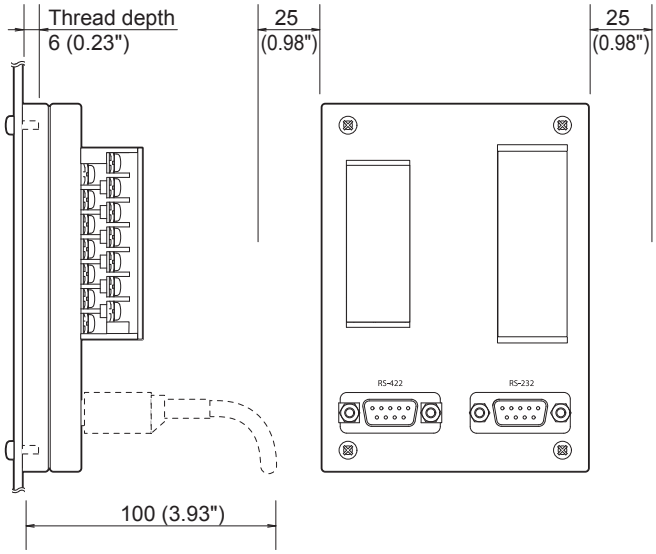

■ Mounting with a mounting bracket

(1) Attaching a mounting bracket

Attach the provided mounting bracket to the Connector Conversion Box.
Tighten the mounting screw with the specified torque.

Tightening torque	0.49 to 0.68 N•m

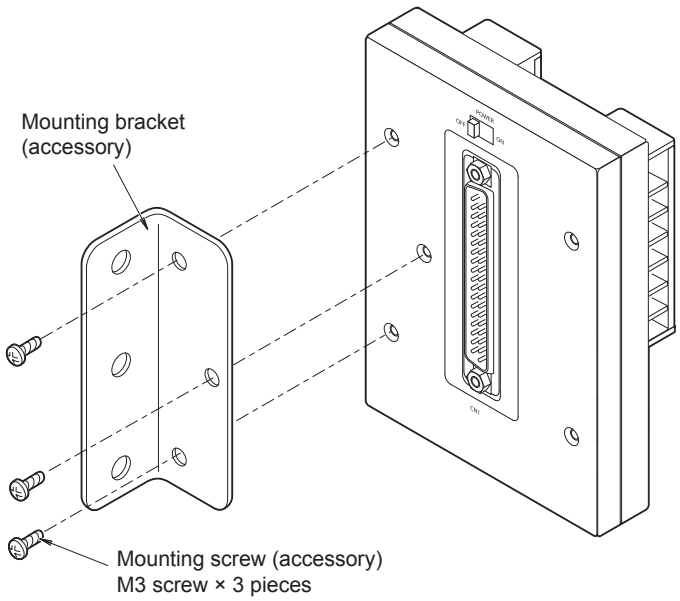

(2) Mounting on the panel face

Mount the Connector Conversion Box on the panel face.
Drill screw holes on the panel face as follows.
Tighten the mounting screw with the specified torque.

Tightening torque	0.69 to 0.88 N•m

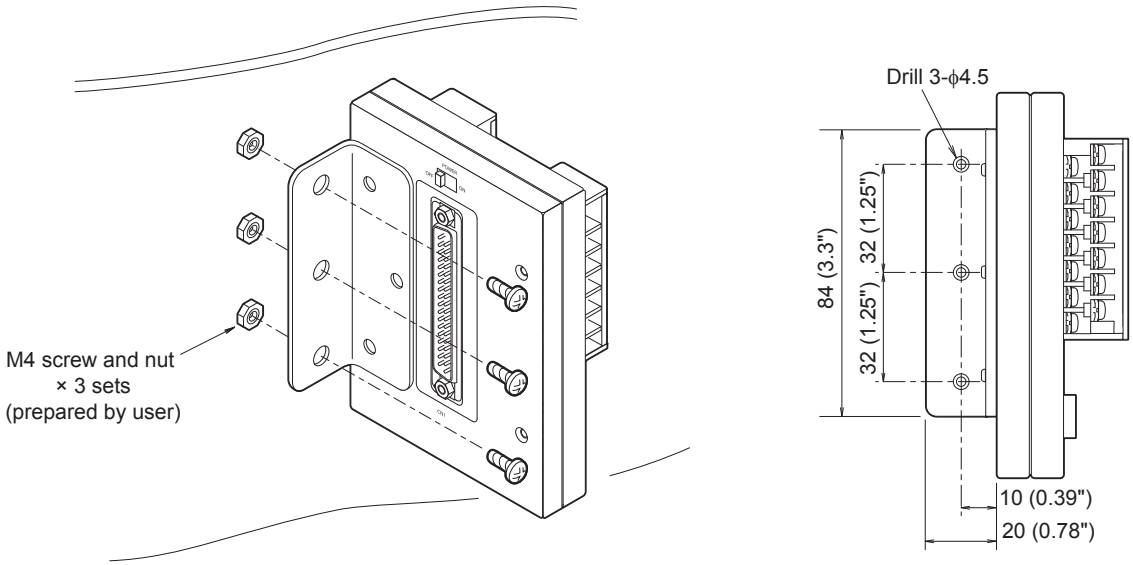

■ Pin assignment

The 37-pin D-Sub connector of an external cable is converted into terminal blocks and a connector for PLC (D-Sub 9-pin type).

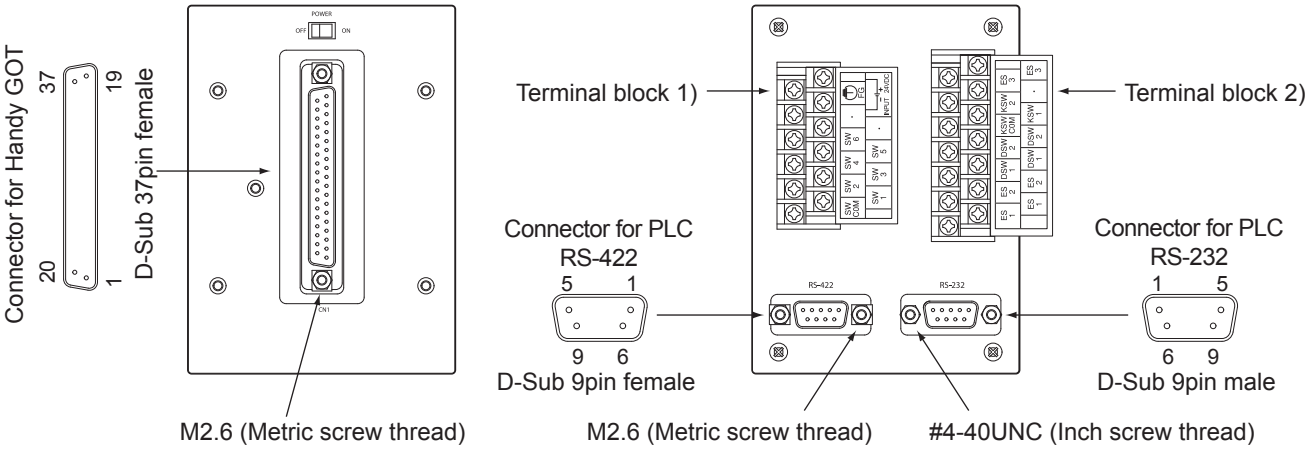

(1) Connector for PLC (RS-422: D-Sub, 9-pin, female type)

GT11H-CNB-37S	GT11H-C□□-37P		Application
Connector for PLC RS-422	Connector for Handy GOT		
	D-Sub 37pin	Signal name	
1	2	TXD+ (SDA)	Signal line for PLC communication (For wiring, refer to the chapter corresponding to the connected controller.)
2	6	RXD+ (RDA)	
3	4	RTS+ (RSA)	
4	8	CTS+ (CSA)	
5	10	SG	
6	3	TXD- (SDB)	
7	7	RXD- (RDB)	
8	5	RTS- (RSB)	
9	9	CTS- (CSB)	

(1) Connector for PLC (RS-232: D-Sub, 9-pin, male type)

GT11H-CNB-37S	GT11H-C□□-37P		Application
Connector for PLC RS-232	Connector for Handy GOT		
	D-Sub 37pin	Signal name	
1	-	N.C	Signal line for PLC communication (For wiring, refer to the chapter corresponding to the connected controller.)
2	4	RXD (RD)	
3	2	TXD (SD)	
4	3	DTR (ER)	
5	10	SG	
6	5	DSR (DR)	
7	6	RTS (RS)	
8	7	CTS (CS)	
9	-	N.C	

(2) Terminal block 1) , 2)

Terminal block 1)
(Terminal block for power supply and operation switches)

Terminal block 2)
(Terminal block for emergency stop switch, grip switch, keylock switch)

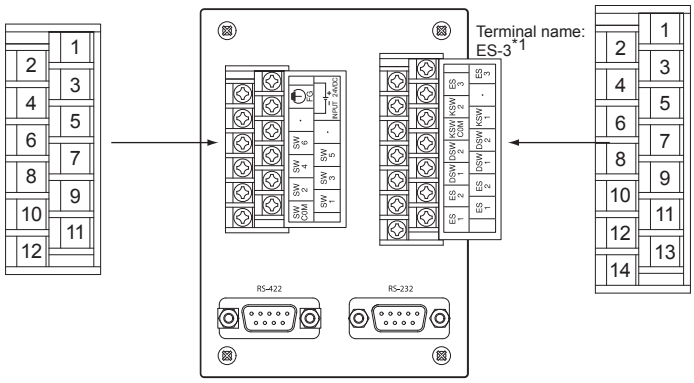

GT11H-CNB-37S		GT11H-C□□-37P*2		Application
Terminal block		Connector for Handy GOT		
		D-Sub 37pin	Signal name	
Terminal block 1)	1	36, 37	DC24V+	24VDC power supply "+"
	2	1	FG	Frame ground
	3	18, 19	DC24-	24VDC power supply "-"
	4	-	N.C	Disable
	5	-	N.C	
	6	34	SW6	For Operation switch
	7	33	SW5	
	8	16	SW4	
	9	15	SW3	
	10	14	SW2	
	11	13	SW1	
	12	12	SW-COM	
Terminal block 2)	1	31	ES-3*3	For Emergency stop switch
	2	32	ES-3*3	
	3	-	N.C	Disable
	4	30	KSW-2	For Keylock switch
	5	29	KSW-1	
	6	28	KSW-C	
	7	27	DSW-2	For Grip switch
	8	26	DSW-2	
	9	25	DSW-1	
	10	24	DSW-1	
	11	23	ES-2	For Emergency stop switch
	12	22	ES-2	
	13	21	ES-1	
	14	20	ES-1	

*1 The cable for the ES-3 signal is provided in the connector conversion box GT11H-CNB-37S regardless of whether the terminal name ES-3 is printed on the box or not.

*2 Use C or later version of GT11H-C□□-37P.

*3 ES-3 is not provided for B or earlier version of GT11H-C□□-37P.

6.6.4 Connector conversion box (GT16H-CNB-37S)

■ External dimensions and part names

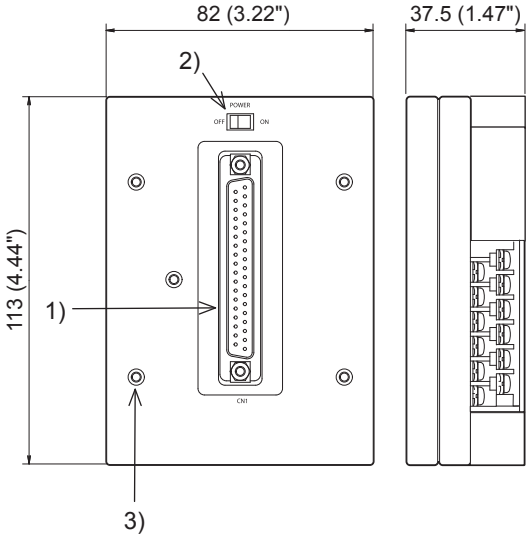

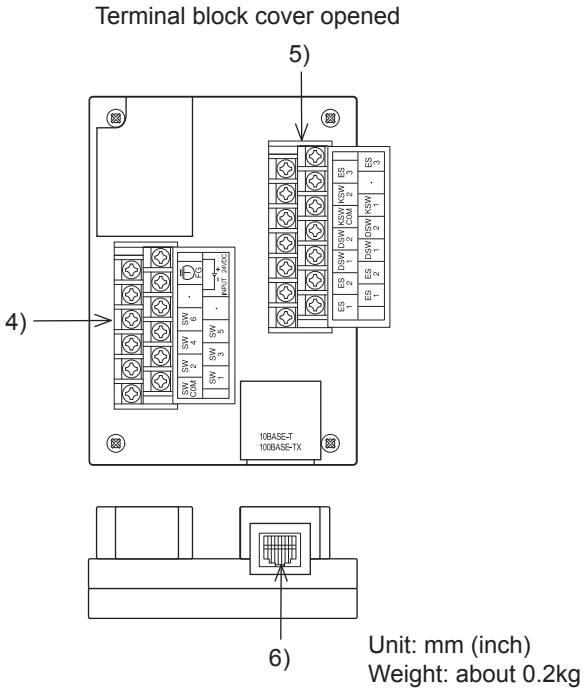

Unit: mm (inch)
Weight: about 0.2kg

No.	Name	Specifications
1)	Connector for Handy GOT connection (D-Sub 37pin (Female)) 17JE-13370-37(D23A)-FA (DDK) or equivalent	Connects the Handy GOT through an external cable.
2)	Handy GOT power switch	Supplies the power to the Handy GOT. When this switch is set to ON, the power is supplied. Turn off this switch when attaching or removing the Handy GOT.
3)	Installation hole	Used to fix the connector conversion box to a panel directly or to a board with the mounting fixtures. For M3 screw
4)	Terminal block for the power supply and operation switch	Connects the 24VDC power supply of Handy GOT and the operation switch (SW1 to 6). With M3 terminal and the cover
5)	Terminal block for the emergency stop switch, the grip switch, and the selector switch	Connects the emergency stop switch of the Handy GOT (ES-1, 2, and 3), the grip switch (DSW-1, 2) and the keylock switch (KSW-1, 2). With M3 terminal and the cover
6)	External connection device communication connector (Ethernet: RJ-45 modular jack)	Connects the external connection device via Ethernet with using a LAN cable.

■ Installation

The connector conversion box can be installed on the panel face directly or installed with the mounting fixtures.

(1) Direct installation on the panel face

Drill a mounting slot of the following size on the panel face.

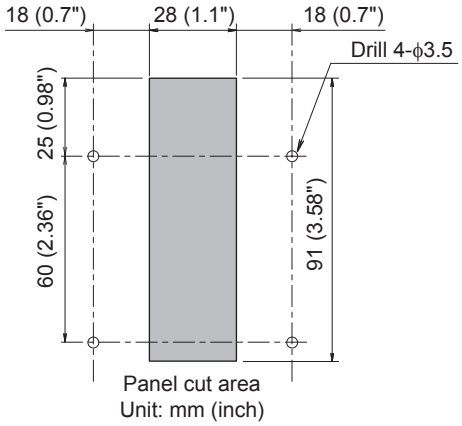

(2) Installing on the panel face

Fit the connector conversion box from the back side of the panel face, and fix it with four M3 screws (prepared by user).

In the connector conversion box, thread of M3, 6mm in depth is cut in each mounting hole.

Prepare four M3 mounting screws separately while considering the thickness of the panel face.

Tighten the mounting screws within the specified torque range.

Tightening torque	0.49 to 0.68N•m

Make sure that interfering objects are not located within 50mm from the rear face so that the connector of a PLC cable is not hindered. To wire the terminal block, keep a space of 25mm or more on both sides of the connector conversion box.

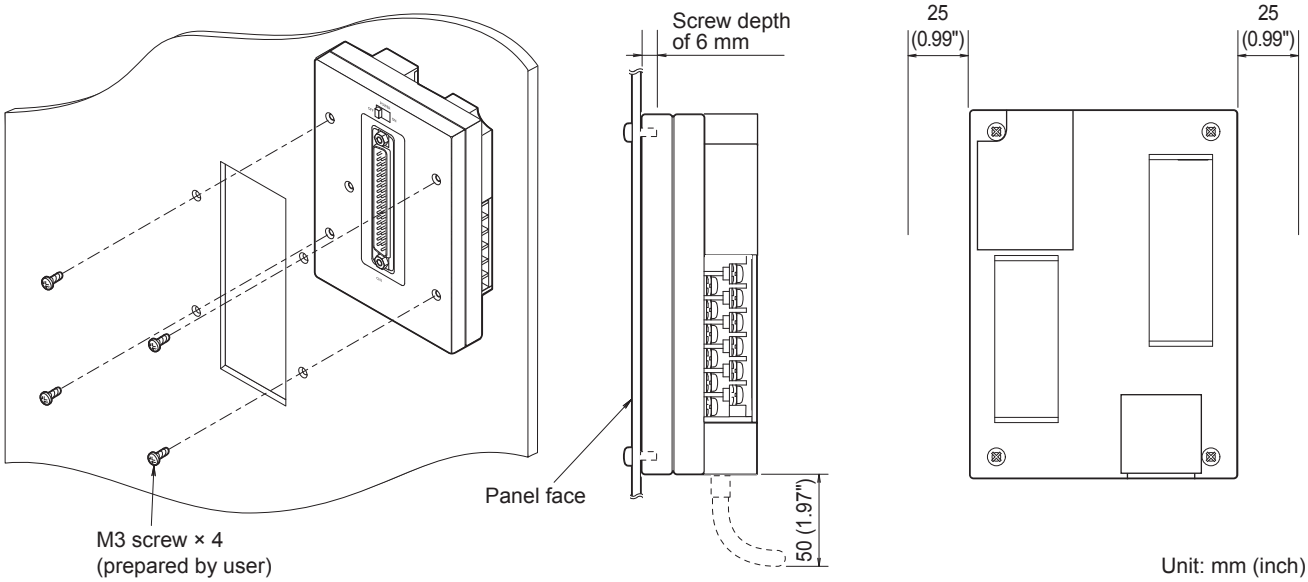

■ Installation with the mounting fixtures

(1) Installing the mounting fixtures

Install the supplied mounting fixtures to the connector conversion box.
Tighten the mounting screws within the specified torque range.

Tightening torque	0.49 to 0.68N•m

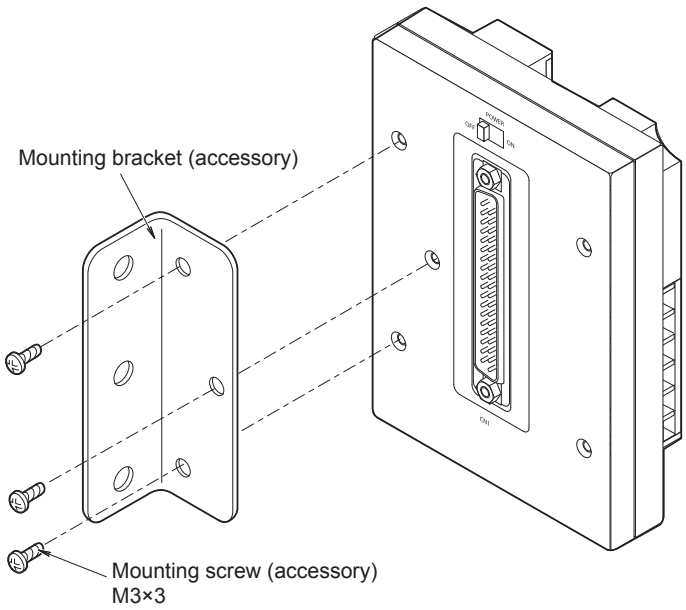

(1) Installing on the panel face

Install the connector conversion box on the panel face (mounting surface).
Drill a mounting slot of the following size on the panel face.
Tighten the mounting screws within the specified torque range.

Tightening torque	0.69 to 0.88N•m

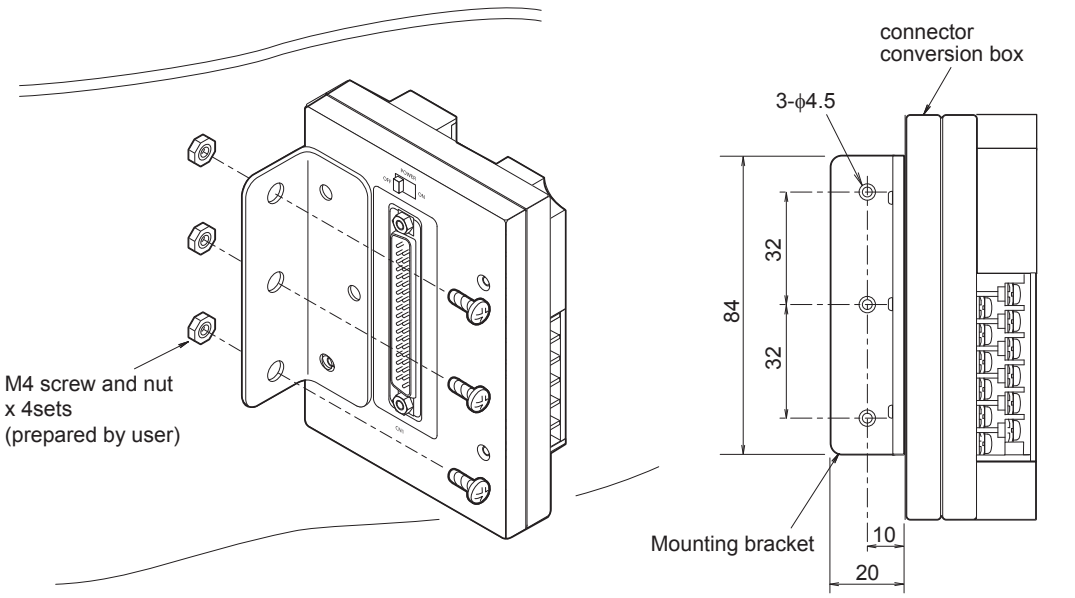

Unit: mm

■ Pin layout and signal names of the connector and the terminal block

The D-Sub 37pin connector of the external cable is converted to the PLC connection connector (module jack) and the following terminal block.

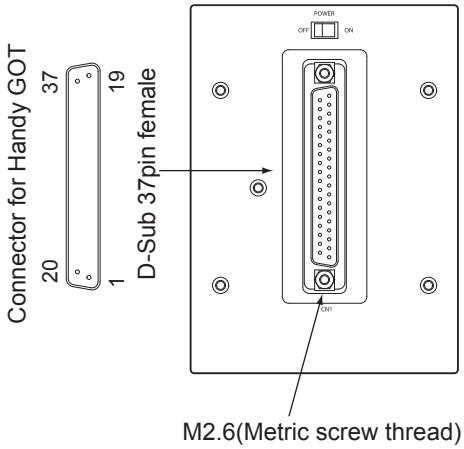

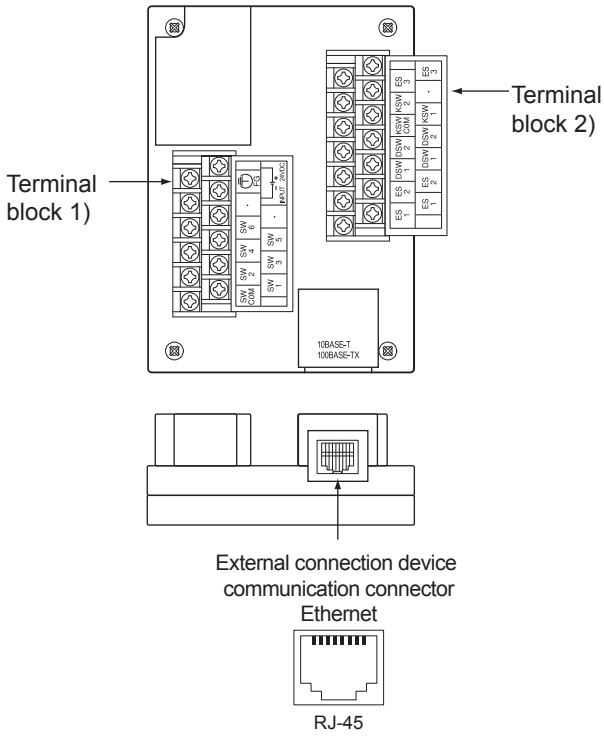

(1) Terminal block 1), 2)

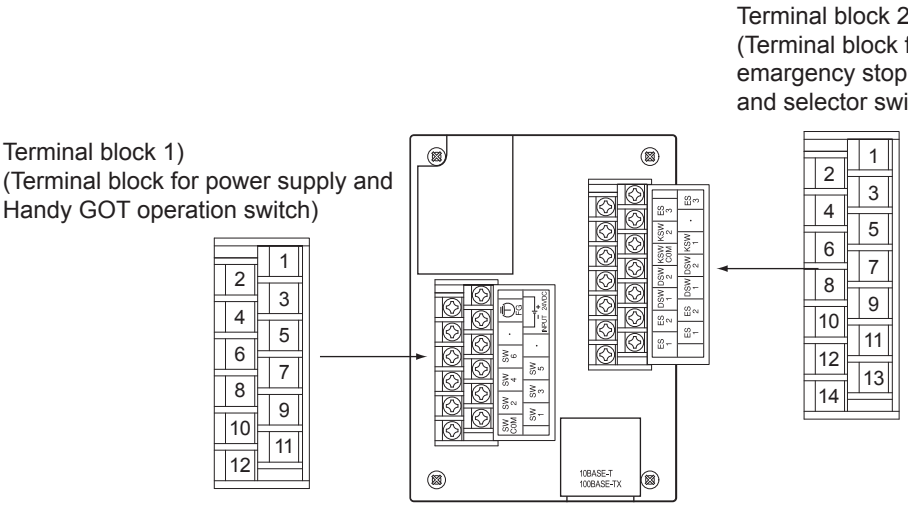

GT16H-CNB-37S		GT11H-C□□-37P*1		Application
Terminal block		Connector for the Handy GOT connection		
		D-Sub 37pin	Signal name	
Terminal block 1)	1	36, 37	DC24V+	24VDC power supply "+"
	2	1	FG	Frame ground
	3	18, 19	DC24-	24VDC power supply "-"
	4	-	N.C	Not used
	5	-	N.C	
	6	34	SW6	For Operation switch
	7	33	SW5	
	8	16	SW4	
	9	15	SW3	
	10	14	SW2	
	11	13	SW1	
	12	12	SW-COM	
Terminal block 2)	1	31	ES-3	For Emergency stop switch
	2	32	ES-3	
	3	-	N.C	Not used
	4	30	KSW-2	For Keylock switch
	5	29	KSW-1	
	6	28	KSW-C	
	7	27	DSW-2	For grip switch
	8	26	DSW-2	
	9	25	DSW-1	
	10	24	DSW-1	
	11	23	ES-2	For Emergency stop switch
	12	22	ES-2	
	13	21	ES-1	
	14	20	ES-1	

*1 Use C or later version of GT11H-C□□-37P.

6.7 With wall-mounting Attachment

The with wall-mounting Attachment is available to fix the handy GOT on the wall, stand or panel.

6.7.1 Applicable With wall-mounting Attachment

The following With wall-mounting Attachment is applicable for Handy GOT.

Product name	Model	Contents
With wall-mounting Attachment	GT14H-50ATT	Mounting screw (M4-14), Nut (M4)

6.7.2 Mounting

(1) Attaching the with wall-mounting Attachment on the panel surface

(a) Processing the panel surface (, wall surface or stand surface)
Drill mounting holes of the dimensions shown below on the panel.

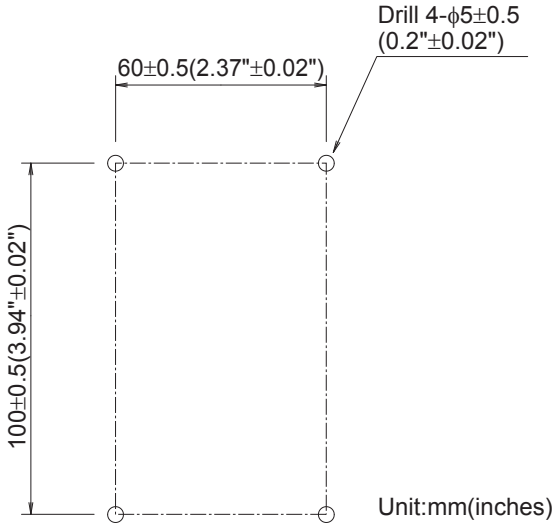

(b) Attaching the with wall-mounting Attachment on the panel surface
Fit the with wall-mounting Attachment on the panel front face, and fix it with M4 screws and nuts (which are packed together).
Holes of □4.5 are drilled for mounting the with wall-mounting Attachment.
Tighten the mounting screws at a specified torque. If the mounting screws are tightened too much, not only the mounting screws but also the with wall-mounting Attachment may be damaged.

Tightening torque	0.69 to 0.88N•m

Make sure that interfering objects are not present in the downward direction so that connection of the external connection cable will not be hindered.
When opening and closing the environment-resistant interface cover (for using the USB/SD card connector located inside the cover) while the handy GOT is attached, make sure that interfering objects are not present in the upward direction.

6.7.3 Attachment of GT14 handy GOT

The figure shows an image of attaching the GT14 handy GOT to the wall-hanging fixture.

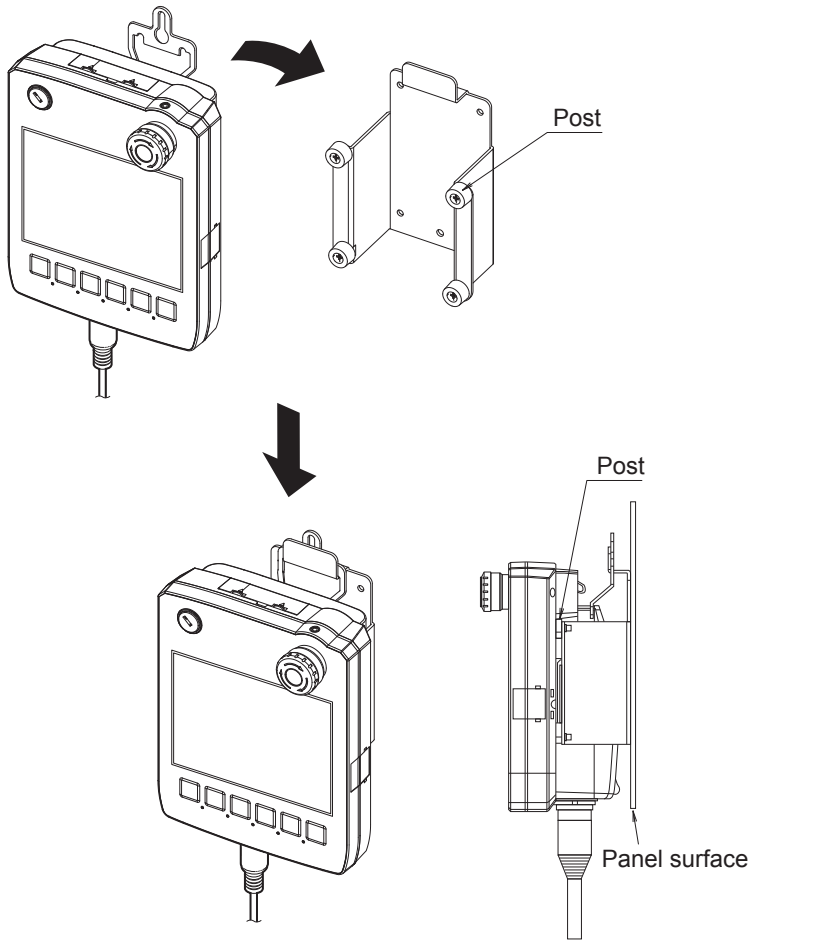

Mounted image as viewed from the side

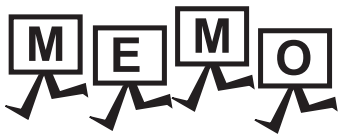
MEMO

7. INSTALLATION

[MOUNTING PRECAUTIONS]

⚠ WARNING

- Be sure to shut off all phases of the external power supply used by the system before mounting or removing the GOT to/from the panel.
- Always turn off the power ON/OFF switch on the connector conversion box before connecting or disconnecting the GOT to it.
  Connecting or disconnecting the GOT with the power being turned on may result in damage to the unit or malfunctions.

⚠ CAUTION

- Use the GOT in the environment that satisfies the general specifications described in this manual.
  Not doing so can cause an electric shock, fire, malfunction or product damage or deterioration.
- Never drop cutting chips and electric wire chips into the ventilation window of the Handy GOT when you drill screw holes or perform wiring.
  Otherwise, fire, failure or malfunction may be caused.
- Connect connection cables securely to the specified connectors while the power is turned OFF.
  Imperfect connection may cause malfunction or failure.
- Operate and store the GOT in environments without direct sunlight, high temperature, dust, humidity, and vibrations.

7.1 Installing Procedure

7.1.1 Holding the Handy GOT in hand

When operating the Handy GOT with holding it in hand, put a hand under the hand strap on the back.
The hand strap length is adjustable.
When carrying or operating the Handy GOT, hold the body of the Handy GOT.
Carrying or operating the Handy GOT by grabbing the cable portion may damage the unit and cable.

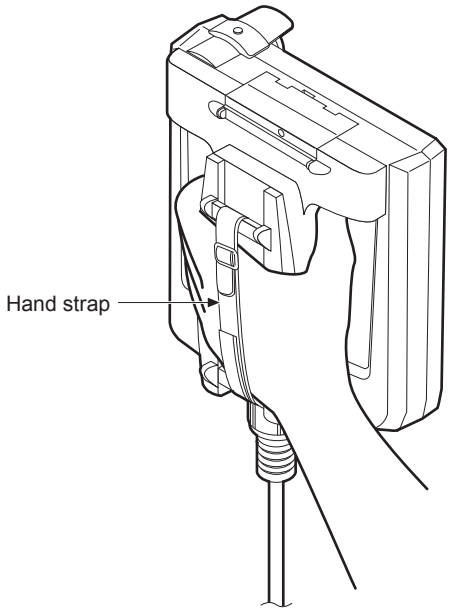

7.1.2 Hanging on a wall

When operating the Handy GOT with hanging on a wall, use the hook for hanging on a wall on the back.

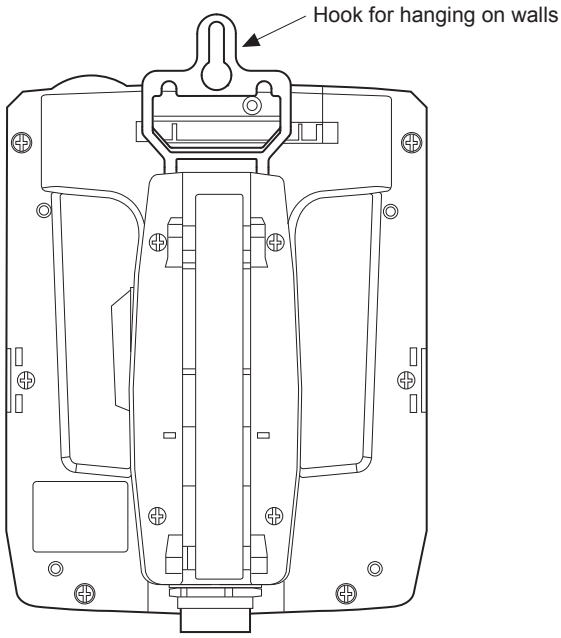

Load (approx. 1.5 to 5 kg) is applied to the wall depending on the weight of the GOT (approx. 0.79kg) main unit and the length of the connection cable.
Take the load into a consideration to attach a fitting on the wall.

7.1.3 Placing on a desk or a floor

When placing the Handy GOT on a desk or floor, pay attention to the following.

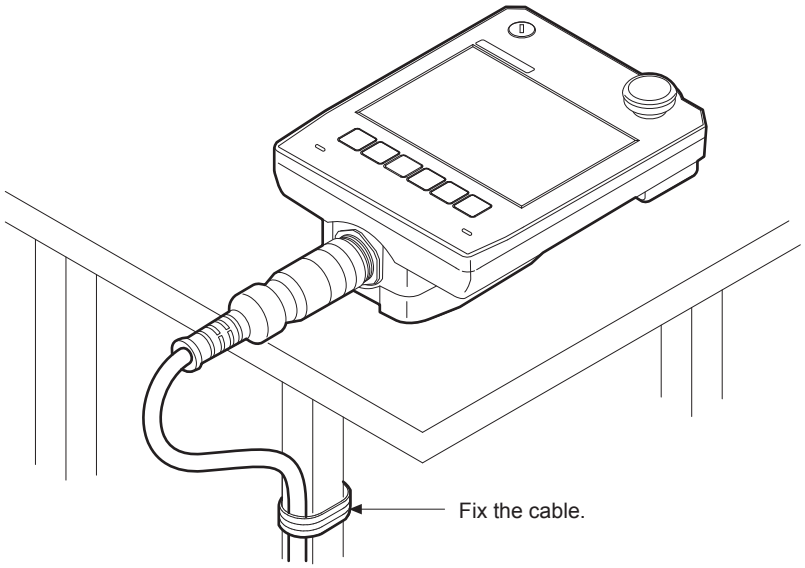

Keep the GOT main unit horizontal to the desktop not to fall from and fix the connection cable to the desk, etc.

7.1.4 Installing to/removing from panel

■ Installing the Connector Conversion Box (GT16H-CNB-42S) on the panel

(1) Overview

The following describes the panel processing when the GOT is installed or removed by attaching a Connector Conversion Box to the control panel or operation panel.

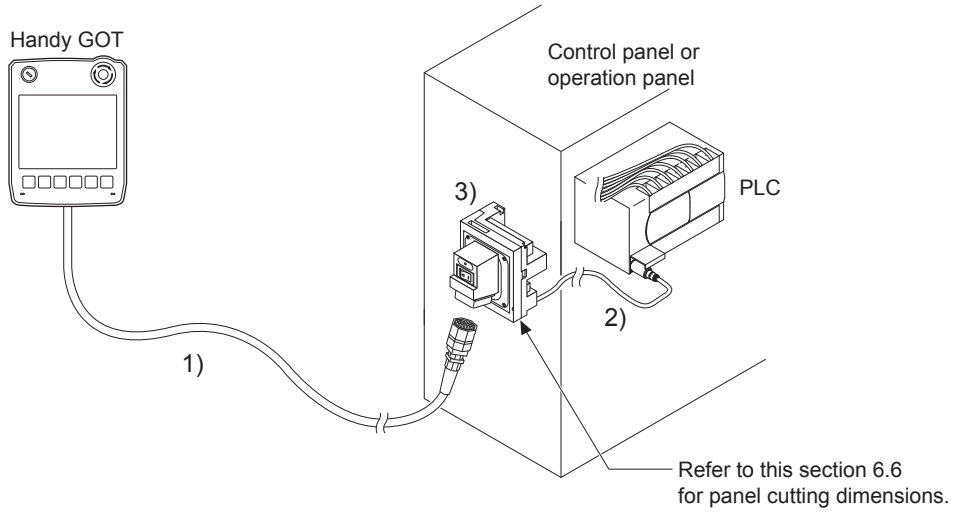

Name		Description
1)	External cable (Connector Conversion Box connection side 42 pins)	GT14H-C30-42P
		GT14H-C60-42P
		GT14H-C100-42P
2)	PLC connection cable	Ethernet connection cable
3)	Connector Conversion Box	GT16H-CNB-42S

Use the Ethernet connection cable for the PLC connection cable.
For the cable selection, refer to the following.

☞ 8. COMMUNICATION CABLE

☞ 21. to 65.

(2) Panel cutting dimensions for Connector Conversion Box

The Connector Conversion Box can be installed on the panel face directly or with mounting bracket offered as an accessory.
For details on installing procedure and panel cutting dimensions, refer to the following.

☞ 6.6 Connector Conversion Box

■ Installing the Connector Conversion Box (GT11H-CNB-37S or GT16H-CNB-37S) on the panel

(1) Overview

The following describes the panel processing when the GOT is installed or removed by attaching a Connector Conversion Box to the control panel or operation panel.

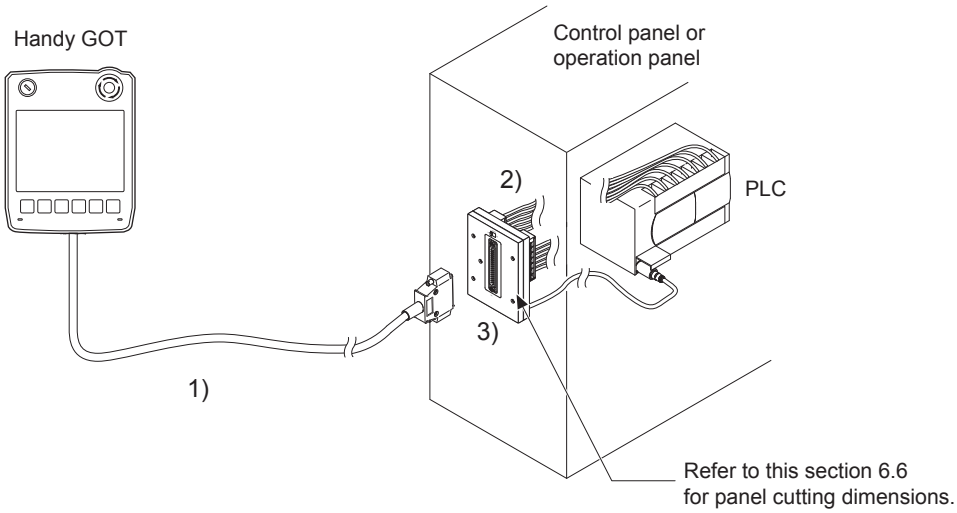

Name		Description
1)	External cable (Connector Conversion Box connection side D-Sub 37 pins)	GT11H-C30-37P
		GT11H-C60-37P
		GT11H-C100-37P
2)	PLC connection cable	Select or prepare appropriate cables for the communication method and controllers.
3)	Connector Conversion Box	GT11H-CNB-37S GT16H-CNB-37S

Select the cable according to the communication method and controller.

For the cable selection, refer to the following.

☞ 8. COMMUNICATION CABLE

☞ 21. to 65.

(2) Panel cutting dimensions for Connector Conversion Box

The Connector Conversion Box can be installed on the panel face directly or with mounting bracket offered as an accessory.

For details on installing procedure and panel cutting dimensions, refer to the following.

☞ 6.6 Connector Conversion Box

■ Installing a relay cable connector on the panel

(1) Overview

The following describes the panel processing when the GOT is installed or removed by attaching a relay cable connector to the control panel or operating panel.

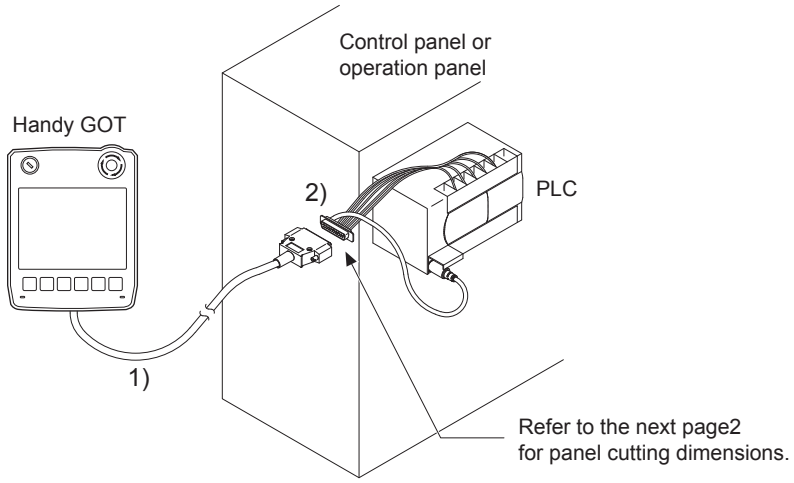

Name		Cable
1)	External connection cable (Relay cable connection side D-Sub 37pin)	GT11H-C30-37P*1
		GT11H-C60-37P*1
		GT11H-C100-37P*1
2)	Relay cable for connecting to PLC	GT11H-C15R4-8P*1
		GT11H-C15R4-25P*1
		GT11H-C15R2-6P*1

*1 Use C or later version.

Select the cable according to the communication method and controller.
For the cable selection, refer to the following.

☞ 8. COMMUNICATION CABLE

If relay cables other than the above are required, create them by users.
To use the external cables which include unfastened cables on one side (GT11H-C30, GT11H-C60, GT11H-C100), refer to the following and connect them according to the application.

☞ 8. COMMUNICATION CABLE

(2) The panel cutting dimensions for relay cables
To install the relay cable connector to the panel, make holes in the panel with the following dimensions.

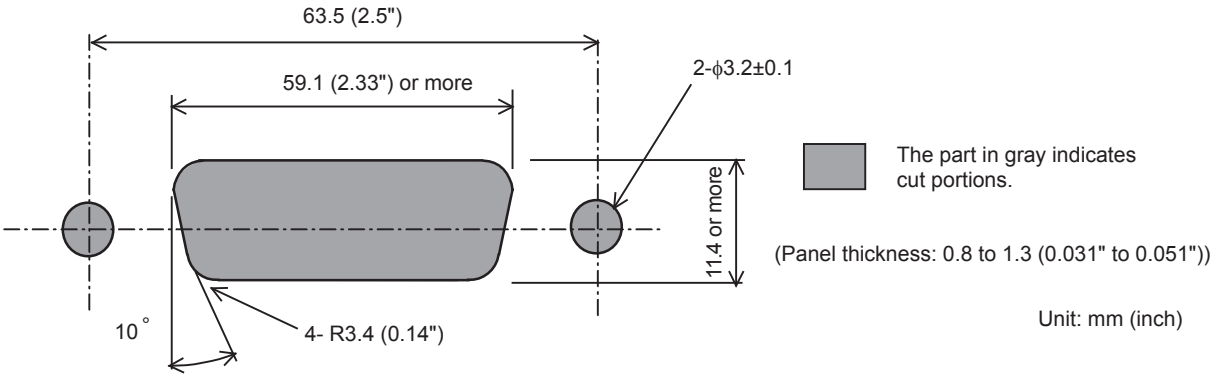

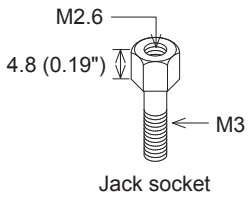

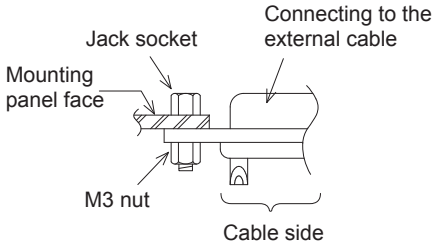

Insert a jack socket into a round hole and fix it with a M3 nut (supplied with the relay cable).

8. COMMUNICATION CABLE

8.1 Overview of Communication Cable

The following communication cables are available.

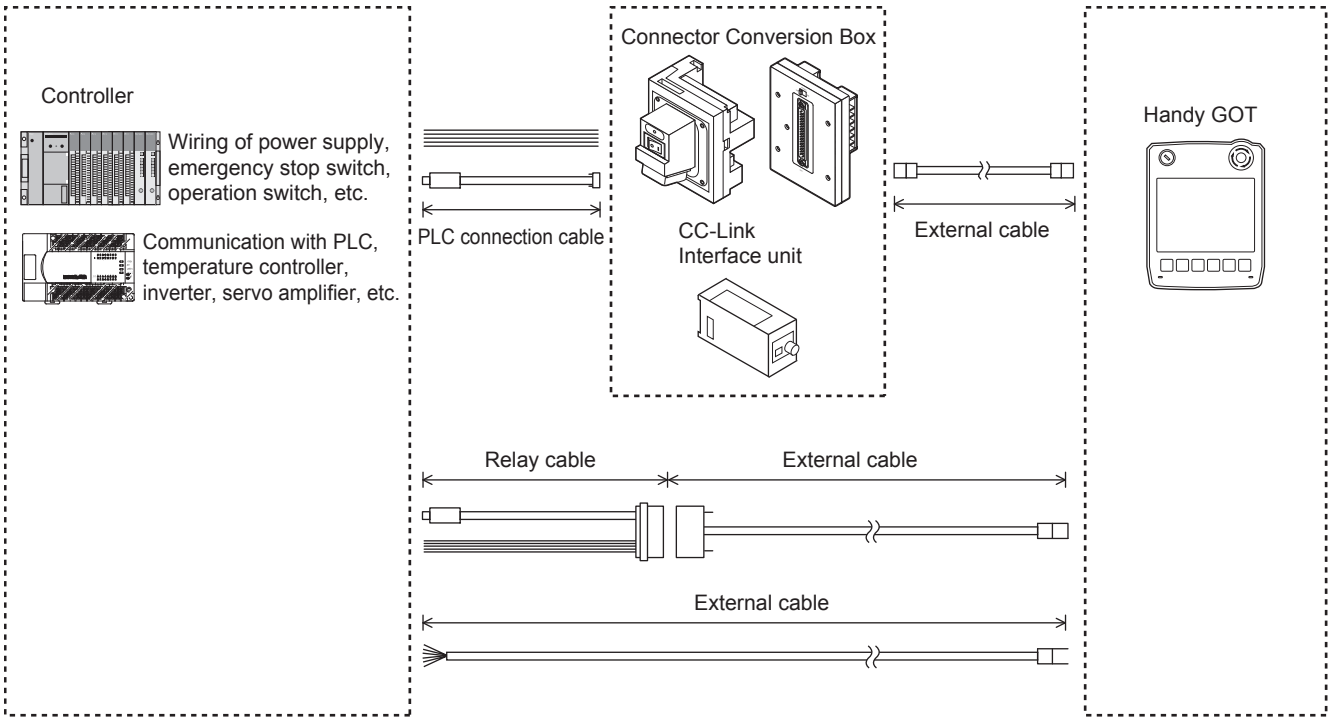

- External cable : A cable which connects the Handy GOT with the Connector Conversion Box, CC-Link Interface unit, controller, or relay cable. The end of the cable on the controller side is the connector type or unfastened cable type. Select suitable one according to a controller to be used. To use the external cables which include unfastened cables on one side (GT11H-C30, GT11H-C60, GT11H-C100), process the cables according to the application. This cable must be prepared to use the Handy GOT.
- PLC connection cable : A cable which connects a Connector Conversion Box and a controller. There are several types which can be selected according to a controller. However, this cable must be prepared by the user depending on the controller to be used.

Name	Model name	Length	Remark
External cable	GT14H-C30-42P	3m	Connector conversion box (GT16H-CNB-42S) connection side 42 pins
	GT14H-C60-42P	6m	
	GT14H-C100-42P	10m	
	GT11H-C30-32P	3m	GT11H(S)-CCL connection cable
	GT11H-C50-32P	5m	
	GT11H-C80-32P	8m	
	GT11H-C130-32P	13m	
	GT11H-C30-37P*1	3m	Connector conversion box (GT11H-CNB-37S or GT16H-CNB-37S) connection side/Relay cable connection side D-Sub 37-pin
	GT11H-C60-37P*1	6m	
	GT11H-C100-37P*1	10m	
	GT11H-C30*1	3m	Relay cable connection side unfastened cables
	GT11H-C60*1	6m	
	GT11H-C100*1	10m	

Name	Model name	Length	Remark
Relay cable (for connecting External cable and PLC)	GT11H-C15R4-8P*1	1.5m	For FX PLC connection (PLC side MINI-DIN 8pin)
	GT11H-C15R4-25P*1	1.5m	For A/QnA CPU/FX1, FX2, FX2C PLC connection(PLC side D-sub 25pin)
	GT11H-C15R2-6P*1	1.5m	For Q CPU connection (PLC side MINI-DIN 6pin)
PLC connection cable (for connecting between PLCs and Connecter Conversion Box)	Select or prepare appropriate cables for the communication method and controllers.		

*1 Use C or later version.

If relay cables other than the above are required, create them by users.

POINT

Selection of the RS-232 connection, RS-422 connection, or Ethernet connection

The Handy GOT can be connected to a controller in either of the RS-232 connection, RS-422 connection, or Ethernet connection.
Select the RS-232 connection, RS-422 connection, or Ethernet connection by using the cable connector for the PLC communication in the environmental protection back cover.
For the RS-232 connection, connect the PLC communication cable connector with the RS-232 connector.
For the RS-422 connection, connect the PLC communication cable connector with the RS-422 connector.
For the Ethernet connection, connect the PLC communication cable connector with the Ethernet connector.
The available connection type differs depending on the external cable to be used.
GT14H-C□□-42P: Ethernet connection
GT11H-C□□-37P: RS-232 connection and RS-422 connection
GT11H-C□□: RS-232 connection and RS-422 connection
(The Ethernet connection is selected at factory shipment.)

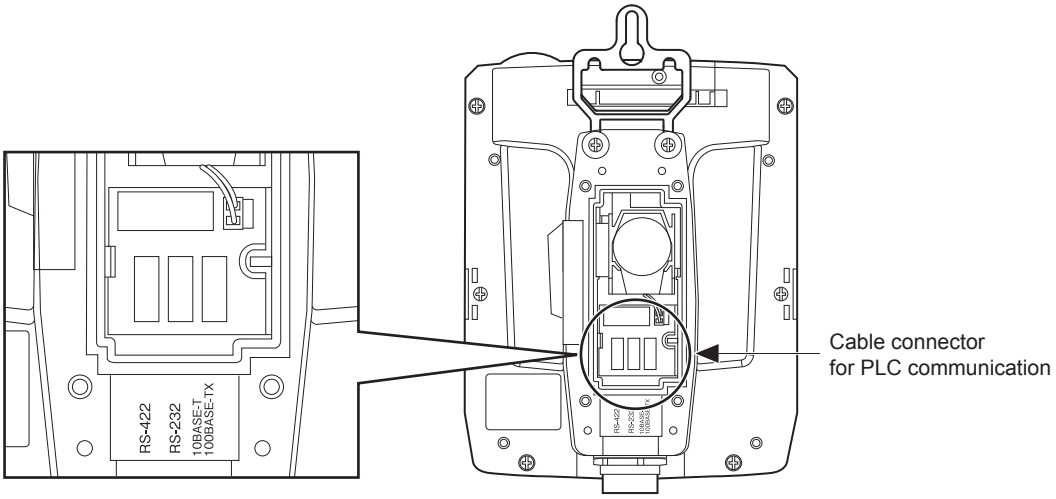

For switching between the RS-232 connection and RS-422 connection at the Ethernet connection, make sure to turn off the Handy GOT power before disconnecting or connecting the cable connector for PLC communication in the environmental protection back cover.
Disconnecting or connecting the cable connector without turning off the Handy GOT power causes a failure. The selected connection method (RS-232 connection or RS-422 connection) at the Ethernet connection is applied when the Handy GOT power is turned on.
The connector can be checked through the window when the environmental protection back cover is closed.
It can be used as a method to check the connection type from the outside of the Handy GOT.

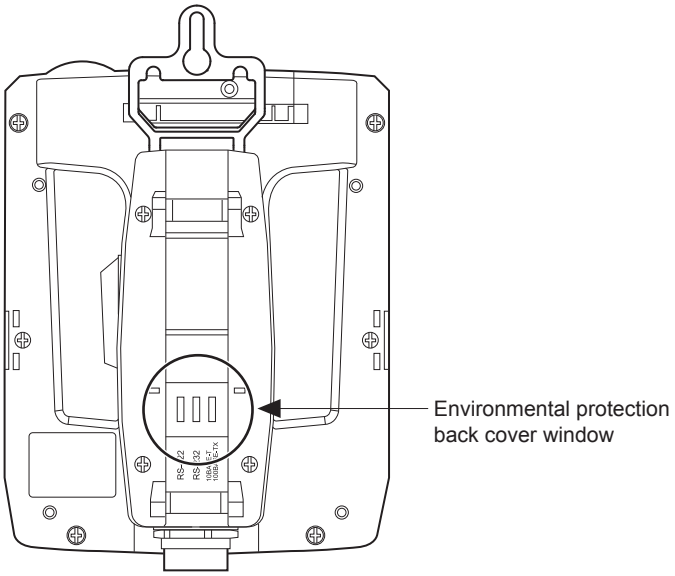

8.2 External Cable, Relay Cable

8.2.1 Pin layout and signal names of the external cable

(1) GT11H-C□□□-37P (Use C or later version.), GT11H-C□□□ (Use C or later version.)

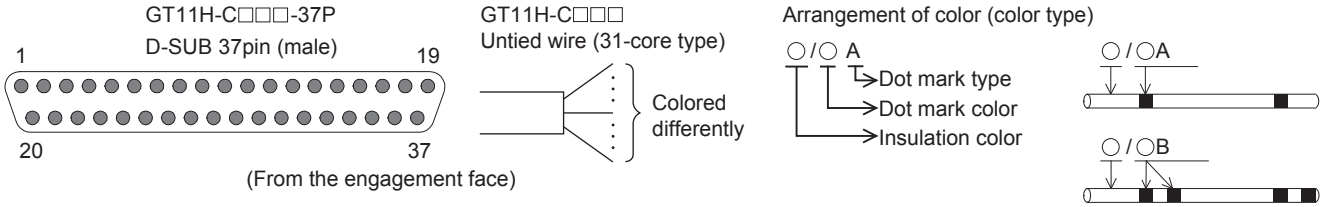

External cable				Communication, power, operation switch signal name		Application
GT11H-C□□□-37P	GT11H-C□□□			RS-422	RS-232C	
D-SUB pin No.	Core wire	Wire diameter	Wire color (color type)			
1	-	-	Shield	FG (Shield)		Frame ground
2	Core wire 1)	AWG28 Twisted pair	W/R (A)	TXD+ (SDA)	TXD (SD)	Signal line for PLC communication
3			W/BK (A)	TXD- (SDB)	DTR (ER)	
4			GY/R (A)	RTS+ (RSA)	RXD (RD)	
5			GY/BK (A)	RTS- (RSB)	DSR (DR)	
6			O/R (A)	RXD+ (RDA)	RTS (RS)	
7			O/BK (A)	RXD- (RDB)	CTS (CS)	
8			Y/R (A)	CTS+ (CSA)	Not used	
9			Y/BK (A)	CTS- (CSB)	Not used	
10		AWG28	PK/R (A)	SG		Signal ground
11	-	-	-	Not used		Not used
12	Core wire 2)	AWG28	White/red (B)	SW-COM (common)		For Operation switch
13			White/black (B)	SW1		
14			Gray/red (B)	SW2		
15			Gray/black (B)	SW3		
16			Pink/black (A)	SW4		
17	-	-	-	Not used		Not used
18	Core wire 4)	AWG20	Black	DC24G		24VDC power supply "-"
19	Transition wiring with 18	-	-	DC24G		
20	Core wire 3)	AWG25	Purple	ES-1		For Emergency stop switch
21			Orange	ES-1		
22			Gray	ES-2		
23			Blue	ES-2		
24			Brown	DSW-1		For Grip switch
25			Yellow	DSW-1		
26			Green	DSW-2		
27			Red	DSW-2		
28			White	KSW-C (common)		For Keylock switch
29			Black	KSW-1		
30			Light blue	KSW-2		
31			Yellow green	ES-3*1		For Emergency stop switch
32			Pink	ES-3*1		
33	Core wire 2)	AWG28	Orange/red 2	SW5		For Operation switch
34			Orange/black 2	SW6		
35	-	-	-	N.C.		Not used
36	Core wire 4)	AWG20	Red	DC24V+		24VDC power supply "+"
37	Transition wiring with 36	-	-	DC24V+		

*1 ES-3 is not provided for B or earlier version of GT11H-C□□□-37P and GT11H-C□□□.

(2) GT11H-C□□□-37P (Use C or later version.), GT11H-C□□□ (Use C or later version.)

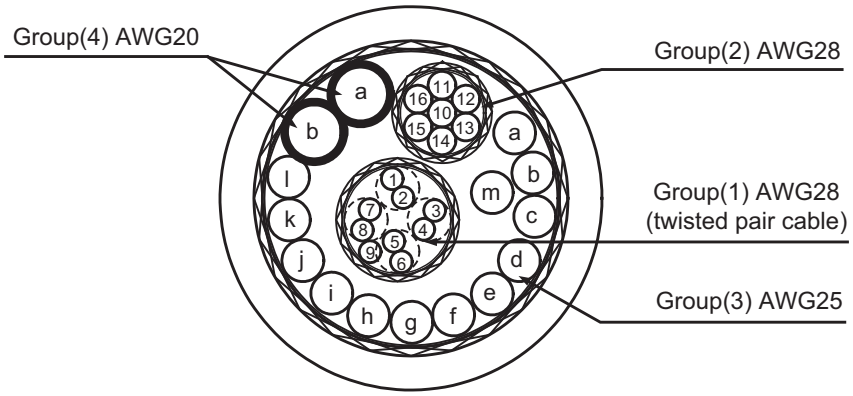

a: Black (BK)
b: Red (R)
c: White (W)
d: Green (GY)
e: Yellow (Y)
f : Brown (BW)
g: Blue (BL)
h: Gray (GY)
i : Orange (O)
j : Purple (PL)
k: Pink (PK)
l : Yellow green (YG)
m: Sky blue (SB)

8.2.2 Pin layout of the relay cable

(1) GT11H-C15R4-8P relay cable (Use C or later version.)
(FX0, FX0S, FX1S, FX0N, FX1N, FX2N, FX1NC, FX2NC, FX3G(C), FX3U(C) PLCs-dedicated cable)

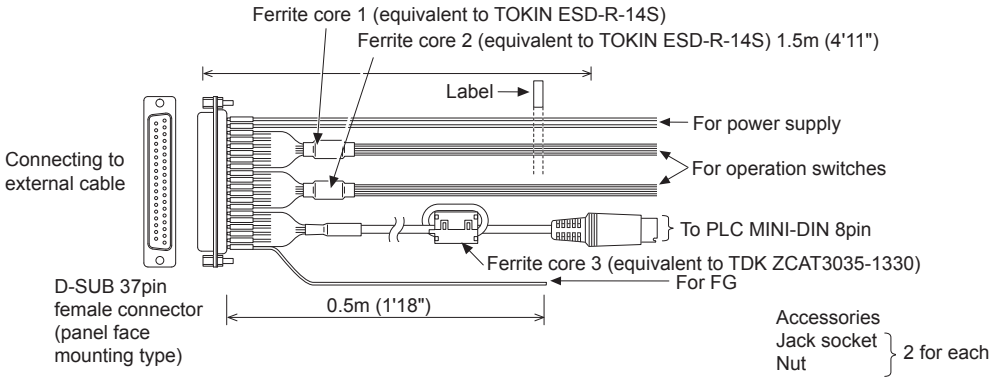

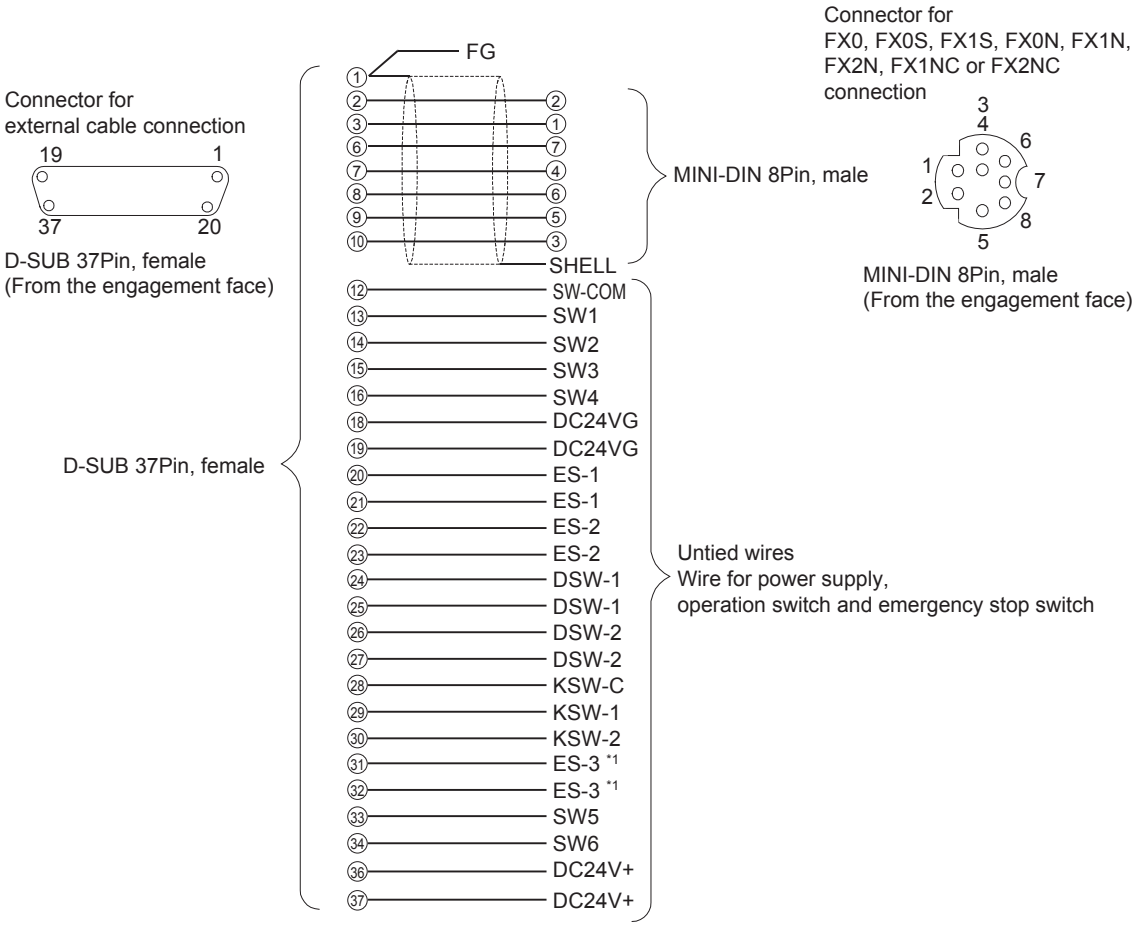

*1 ES-3 is not provided for B or earlier version of the cables.

(2) GT11H-C15R4-25P relay cable (Use C or later version.)
(A, QnA, FX1, FX2, FX2C PLCs-dedicated cable)

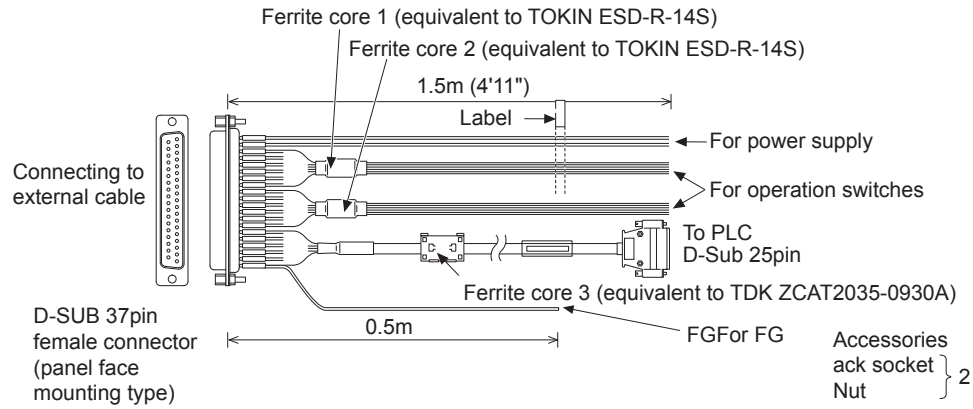

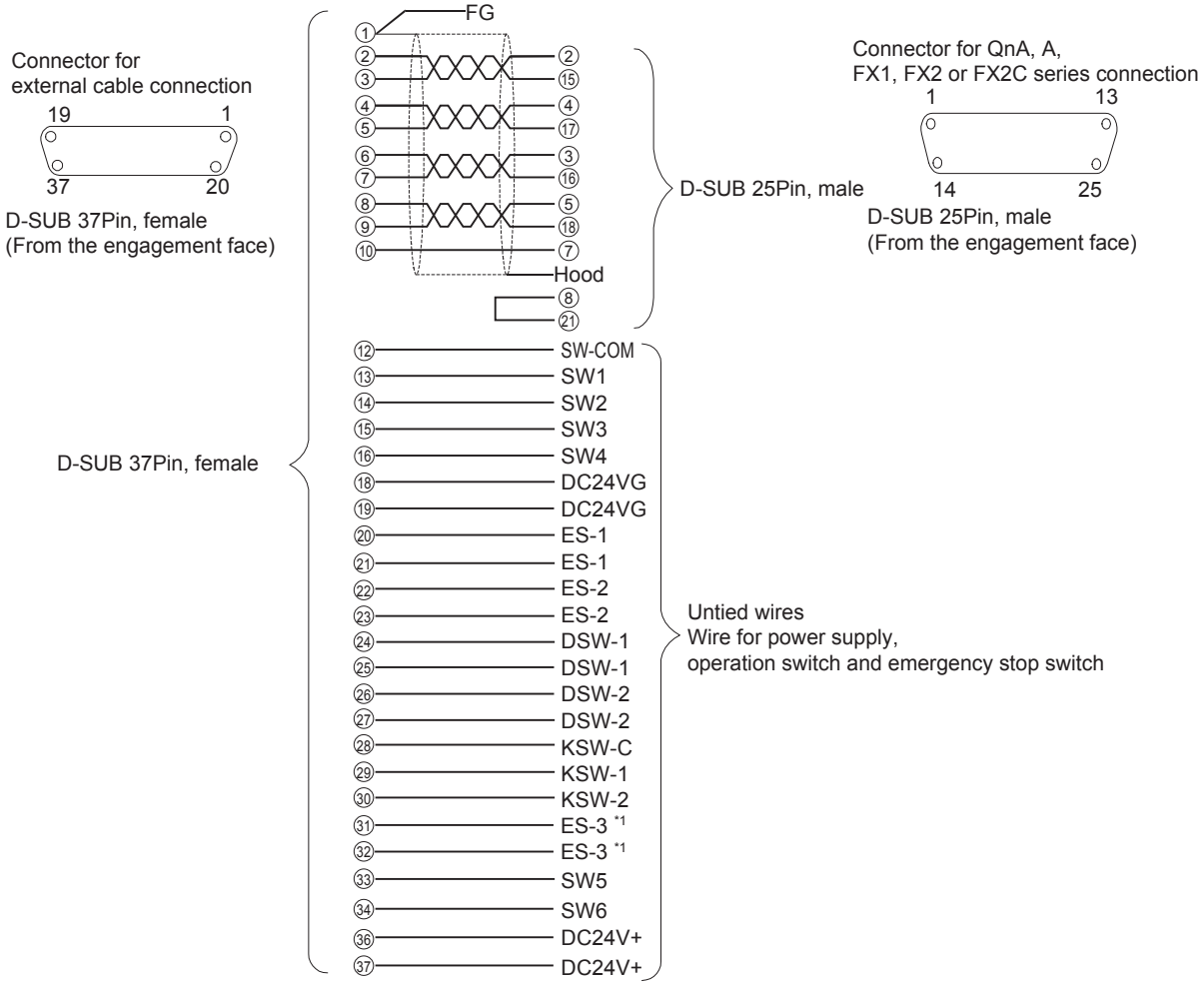

*1 ES-3 is not provided for B or earlier version of the cables.

(3) GT11H-C15R2-6P relay cable (Use C or later version.)
(Q series PLC-dedicated cable)

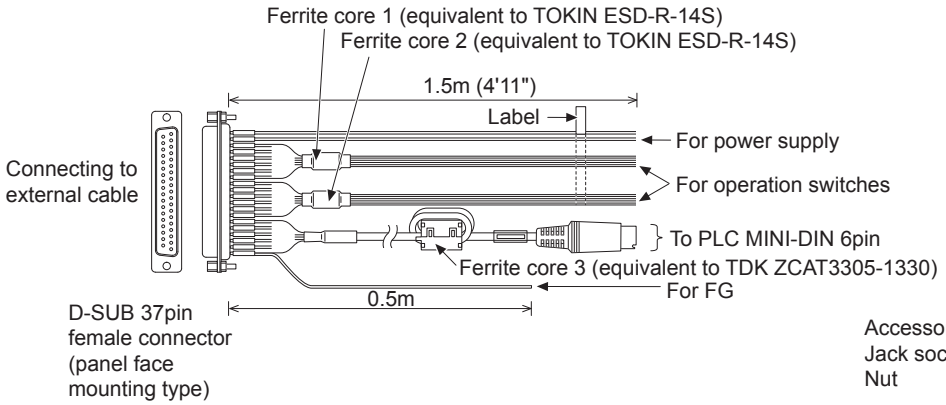

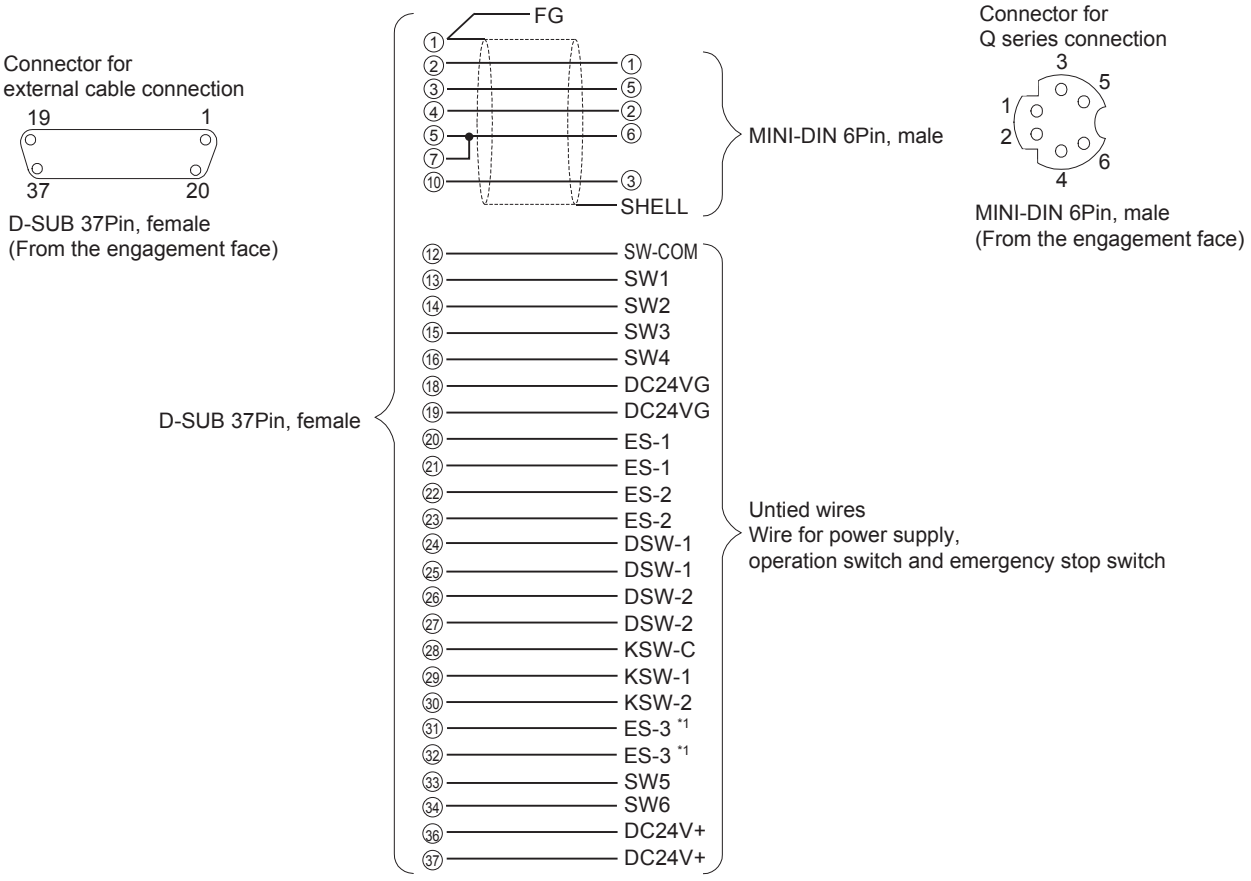

*1 ES-3 is not provided for B or earlier version of the cables.

8.2.3 Connector specifications

■ Connector to be used

(1) Connector for GT11H-C□□□-37P

The following connector is used as the connector for the relay cable of the external cable (GT11H-C□□□-37P).
For the connector to be connected to GT11H-C□□□-37P and its cover, use products applicable to the GT11H-C□□□-37P connector.

Connector model	Connector type	Manufacturer
17JE-23370-02(D8A2)-CG	37-pin D-sub (male) M2.6 screw fixed type	DDK Ltd.

(2) Controller side connector

Use the connector compatible with the controller.
For details, refer to the manual of the controller to be used.

8.2.4 Installing and removing of external cable

■ Installation procedure of external cable (GT14 Handy and GT11H(S)-CCL side)

1. Check that the 24VDC power to the external cable is OFF.
2. Insert the connector adjusting the triangle marks of the main unit side connector and cable side connector.
(The connectors are locked after the lever is inserted.)

■ Removal procedure

1. Check that the 24VDC power to the external cable is OFF.
2. Pull out the cable while turning the triangle mark side of the cable side connector to the left.

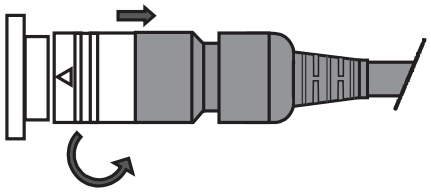

■ Installation procedure of external cable (Connector Conversion Box, GT16H-CNB-42S side)

1. Check that the 24VDC power to the external cable is OFF.
2. Insert the connector adjusting the triangle marks of the main unit side connector and cable side connector.

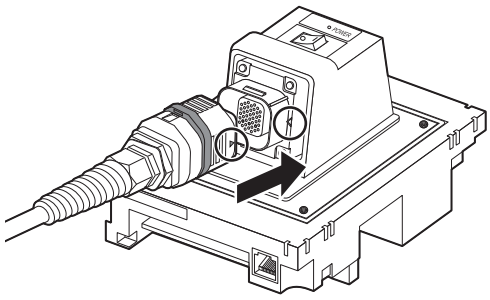

3. After inserting the connector, push the lock lever. The connecters are locked after the lever is pushed into.

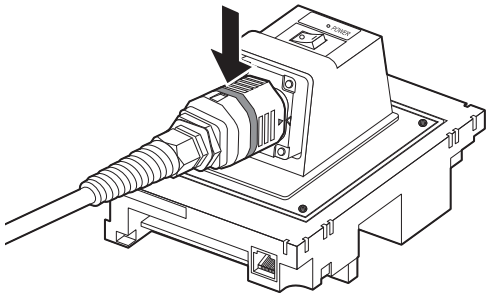

■ Removal procedure

1. Check that the 24VDC power to the external cable is OFF.
2. Pull up the lock lever with inserting a flat-blade screwdriver into the release hole of the lock lever.

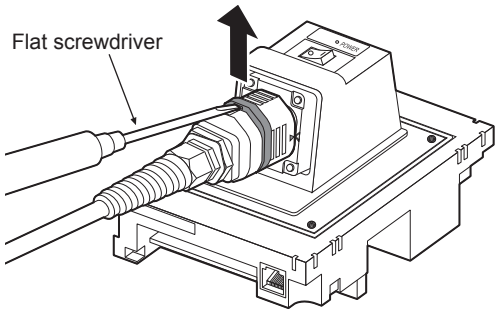

3. The external cable can be removed by pulling the whole plug connector while shifting the coupling of the plug connector to the cable side.

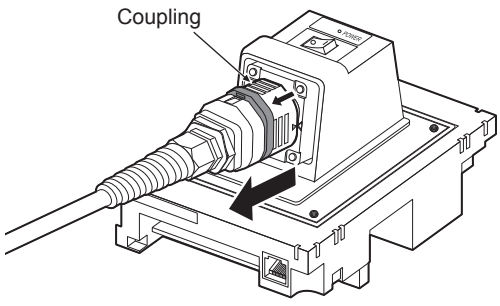

9. HANDLING OF POWER WIRING AND SWITCH

[WIRING PRECAUTIONS]

⚠ WARNING

- Make sure to attach the back cover to the Handy GOT before turning on the power and starting operation after the installation or wiring work.
  Otherwise, electrical shock may be caused.
- Be sure to shut off all phases of the external power supply used by the system before wiring. Failure to do so may result in an electric shock, product damage or malfunctions.
- Please make sure to ground FG terminal of the GOT power supply section by applying 100 or less which is used exclusively for the GOT. Not doing so may cause an electric shock or malfunction.
- Correctly wire the GOT power supply section after confirming the rated voltage and terminal arrangement of the product. Not doing so can cause a fire or failure.
- Exercise care to avoid foreign matter such as chips and wire offcuts entering the GOT. Not doing so can cause a fire, failure or malfunction.

⚠ CAUTION

- The cables connected to the unit must be run in ducts or clamped.
  Not doing so can cause the unit or cable to be damaged due to the dangling, motion or accidental pulling of the cables or can cause a malfunction due to a cable connection fault.
- When unplugging the cable connected to the unit, do not hold and pull the cable portion.
  Doing so can cause the unit or cable to be damaged or can cause a malfunction due to a cable connection fault.
- Plug the communication cable into the connector of the connected unit and tighten the mounting and terminal screws in the specified torque range.
  Undertightening can cause a short circuit or malfunction. Overtightening can cause a short circuit or malfunction due to the damage of the screws or unit.

For the dimensional drawing of connection cables, refer to the following.

☞ Appendix.1 External Dimensions

POINT

General preventive measures against noise

There are two kinds of noises: Radiated noise that is transmitted into the air and Conductive noise that is directly transmitted along connected lines.
Countermeasures must be taken considering both kinds of noises and referring to the following 3 points.

(1) Protecting against noise
  (a) Keep signal lines away from noise sources such as a power cable or a highpower drive circuit.
  (b) Shield the signal lines.

(2) Reducing generated noise
  (a) Use a noise filter, etc. to reduce the level of the noise generated due to a source such as a high-power motor drive circuit.
  (b) Attach surge killers to the terminals on the No Fuse Breaker (NFB), electromagnetic contactors, relays, solenoid valves, and generators to suppress noise interference.

(3) Releasing noise to the ground
  (a) Make sure to connect the ground cable to the ground.
  (b) Use a short and thick cable to lower its impedance.
  (c) Ground the power system and the control system separately.

Operation at momentary power failure

The GOT continues to operate even upon 5ms or shorter instantaneous power failure.
The GOT stops operating if there is extended power failure or voltage drop, while it automatically resumes operation as soon as the power is restored.

9.1 Internal Wiring Diagram of GT14 Handy

Each switch is wired inside the GT14 Handy as shown in the following diagram.

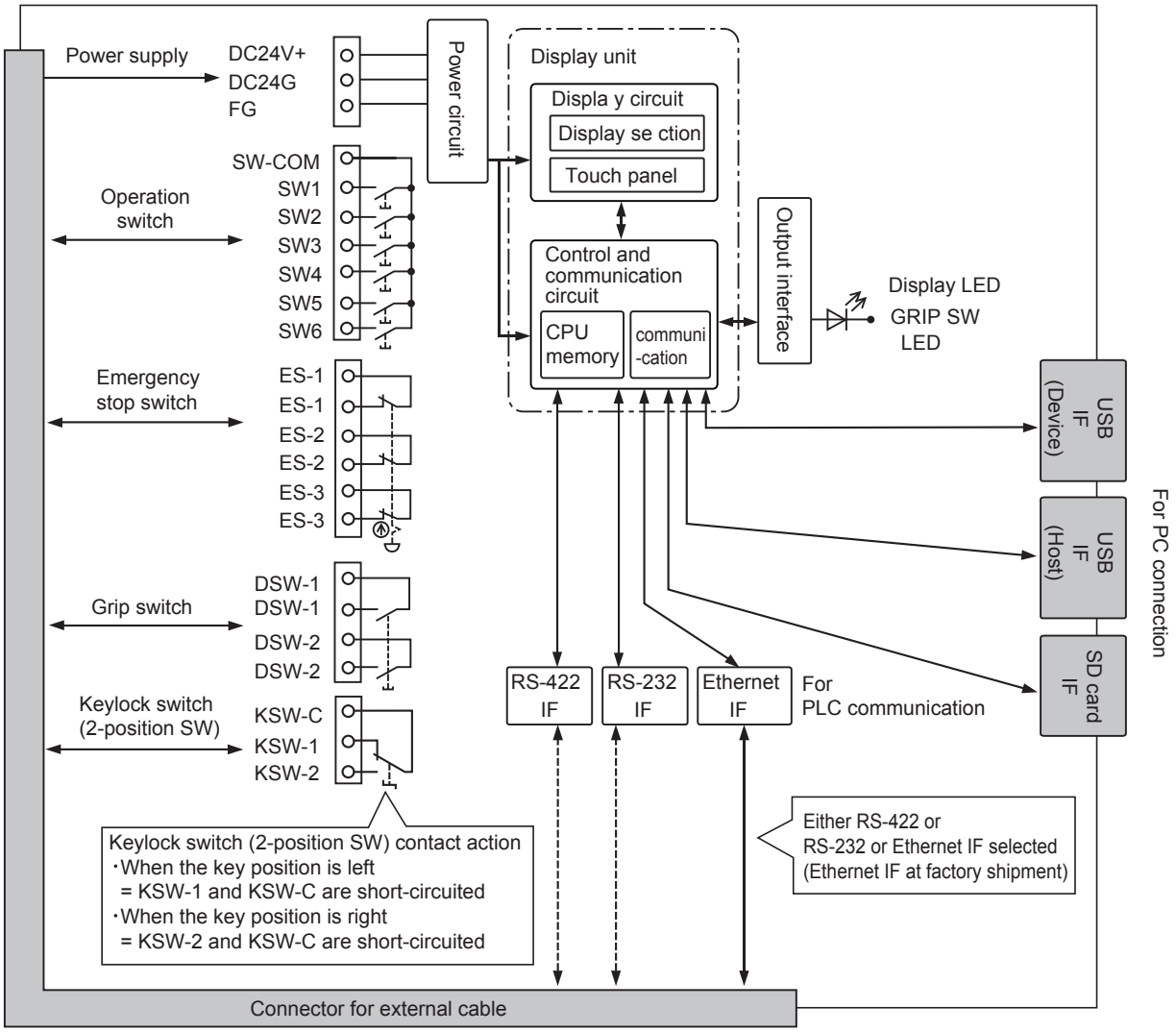

9.2 Power Wiring

9.2.1 Power wiring and grounding

GOT power is supplied from the external power.
In addition, the following table shows the input power supply voltage and the consumed current.

Item		Specifications	
		GT1455HS-QTBDE	GT1450HS-QMBDE
Input power supply voltage		DC24V (+10% -15%)	
Power consumption		8.4W or less (350mA/DC24V)	7.5W or less (310mA/DC24V)
	At backlight off	7.0W or less (290mA/DC24V)	
Inrush current		30A or less (at max. load) 2ms	

Example of feeding with external power
Connect the external cable to the external power.

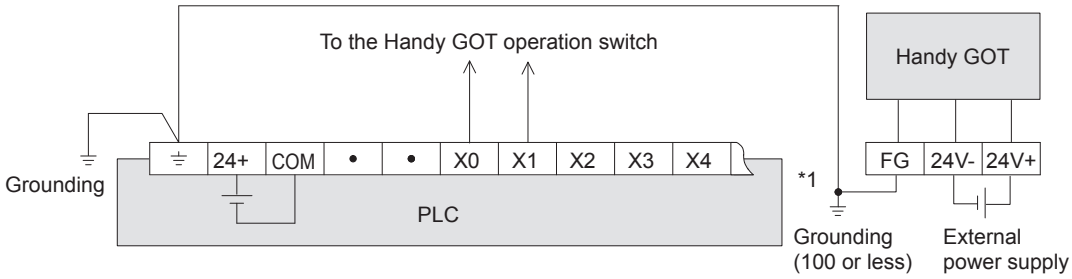

*1 Cautions for grounding with the input power

a) When the input powers are the same

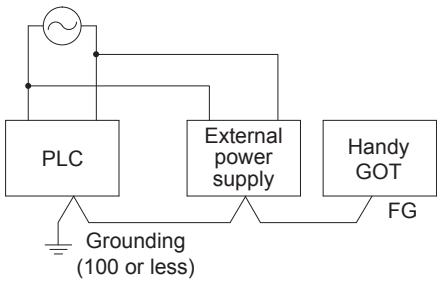

When the input powers of the PLC main unit and external power (24VDC) are the same, connect the FG cable of the GOT and the ground terminal of the PLC (⏚) and carry out the grounding.

b) When the input powers are different

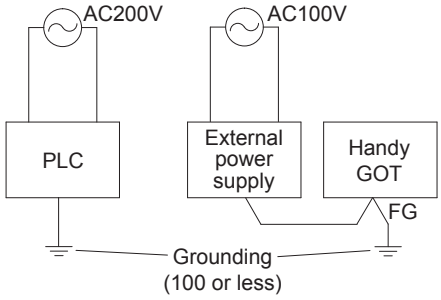

When the input powers are different (PLC: 200VAC, Power: 100VAC), connect the ground terminal (⏚) of PLC and the FG cable of GOT separately and carry out the independent grounding.

Pin layout

Cable		Terminal No.		
		24+	24G	FG
External cable	GT11H-C□□□-37P	36, 37 (Short-circuit inside of the connector)	18, 19 (Short-circuit inside of the connector)	1
	GT11H-C□□□	Red, (core wire 4))	Black, (core wire 4))	Shield*1
Relay cable		24+ (label)	24G (label)	FG (label)
Connector conversion box		Terminal block 1) 1	Terminal block 1) 3	Terminal block 1)*2 2

*1 The external cable has three braided shields. Bundle the three shields and ground them.
*2 Be sure to ground FG terminal.

9.2.2 The cause of malfunctions related wiring/Remedy

Grounding of the GOT may cause electric potential difference and noise interference, which may result in GOT malfunctions. These problems may be resolved by taking the following measures.

■ Wiring path of the GOT's ground cable and power line

Bundling the GOT's ground cable and power line together can cause interference noise, which may result in malfunctions. Keeping the GOT's ground cable and power line away from each other will help minimize noise interference.

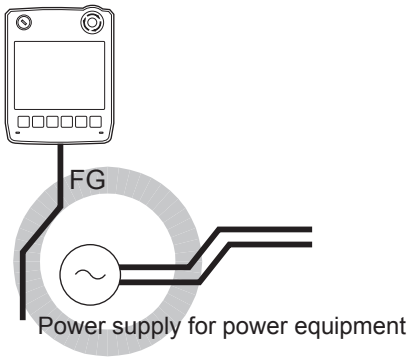

Good: Wiring the ground cable away from the power cable

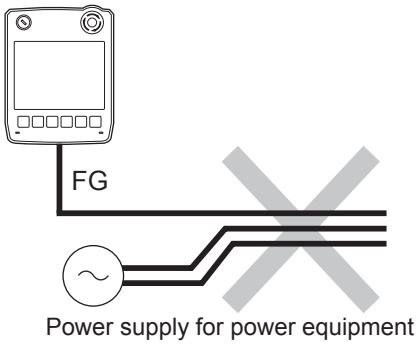

Bad: Bundling the ground cable and the power cable

■ Connecting the ground cable from the panel that houses control equipment to the panel to which the GOT is grounded

When running a single ground cable from the panel that houses such piece of control equipment as a sequencer to the panel to which the GOT is grounded, the ground cable may have to be directly connected to the terminal on the GOT.

When using the connector conversion box

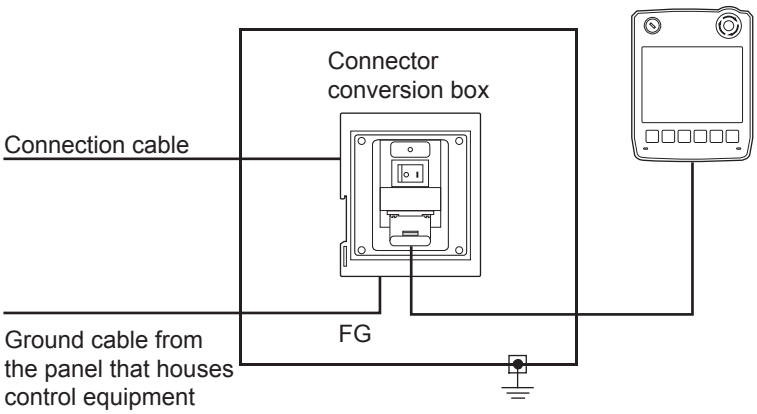

When using the external cable

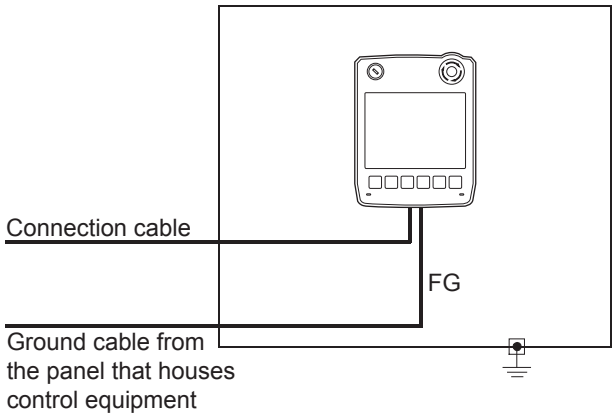

If electric potential difference between the ground points created by it causes malfunctions, lowering the voltage as shown in Remedy 1 below may solve the problem.

- Remedy 1 (Refer to the figures Remedy 1-1 and 1-2 below.)
  If the electric potential difference between the ground cable and the panel that houses the GOT is creating problems, connect the ground cable to the panel also.
  If the wiring method as shown in Remedy 1-1 is not feasible, follow Remedy 1-2.

When using the connector conversion box

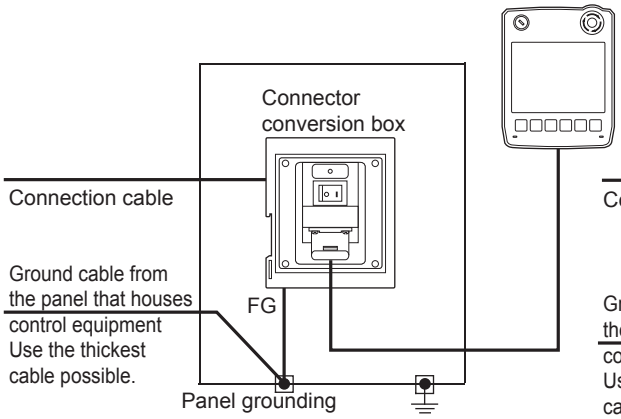

Remedy1-1

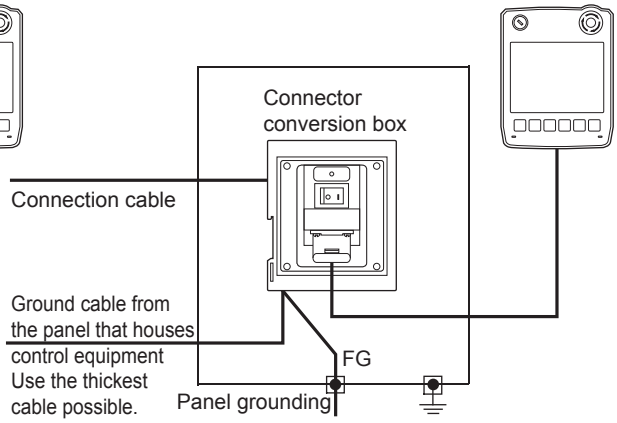

Remedy1-2

When using the external cable

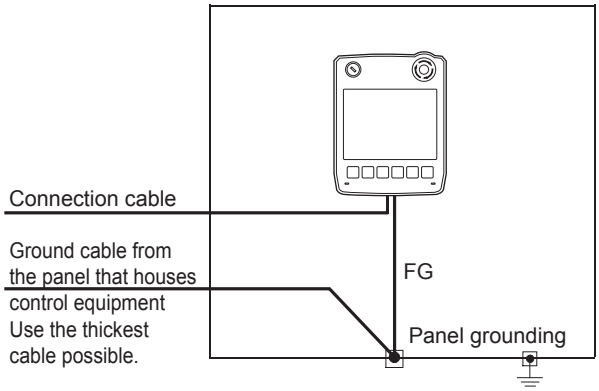

Remedy1-1

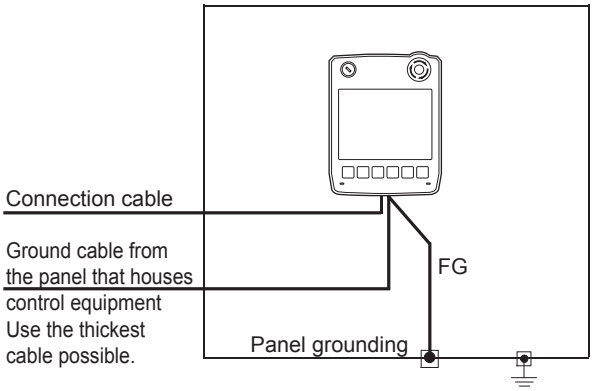

Remedy1-2

If taking Remedy 1 worsens noise interference, taking Remedy 2 may alleviate it.

- Remedy 2 (Refer to the figures Remedy 2-1 and 2-2 below.)
  Attach a ferrite core to the cable if noise from the GOT panel has adverse effects on the GOT when Remedy 1 is taken.
  Wind the wire around the ferrite core several times (approx. 3 times), if a ferrite core is used.
  If the wiring method as shown in Remedy 2-1 is not feasible, follow Remedy 2-2.

When using the connector conversion box

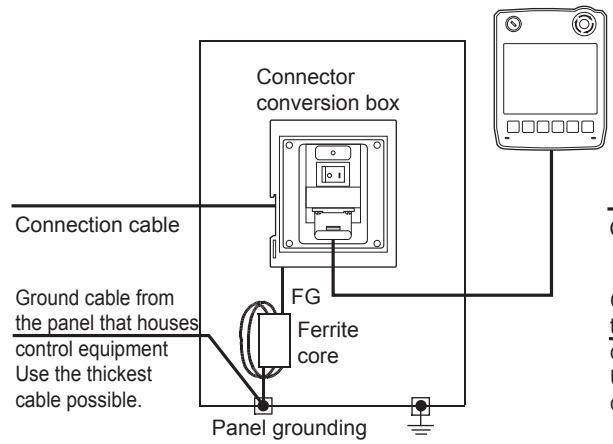

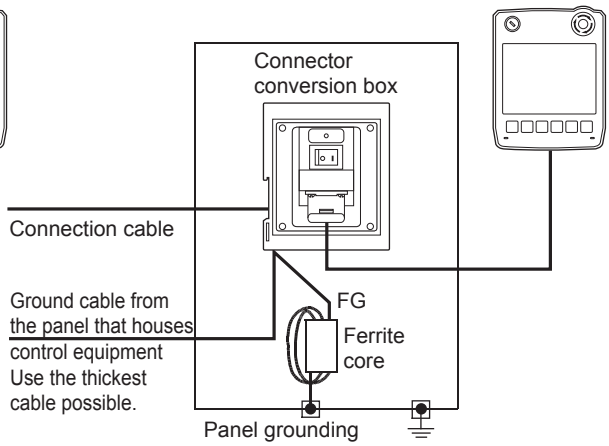

When using the external cable

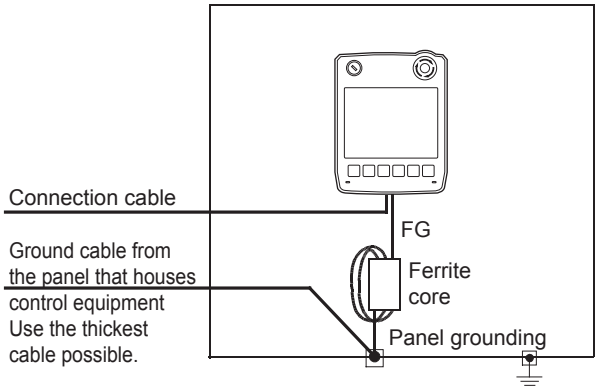

Remedy2-1

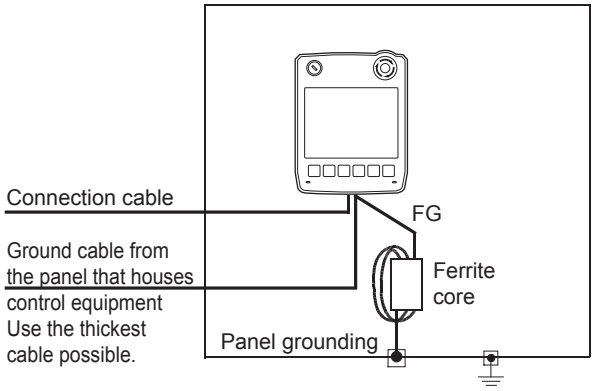

Remedy2-2

9.3 Wiring inside and outside the panel

9.3.1 Wiring inside

Run power lines, servo amplifier drive wires, and communication cables so that they do not cross each other.
Noise interference that is generated by cables that cross each other may cause malfunctions.
Surge suppressors are an effective way to filter out surge noise that is generated from no fuse breakers (NFB), electromagnetic contactors (MC), relays (RA), solenoid valves, and induction motors.
Refer to the section to follow for surge killers.

☞ 9.3.3 Attaching surge killers to control equipment

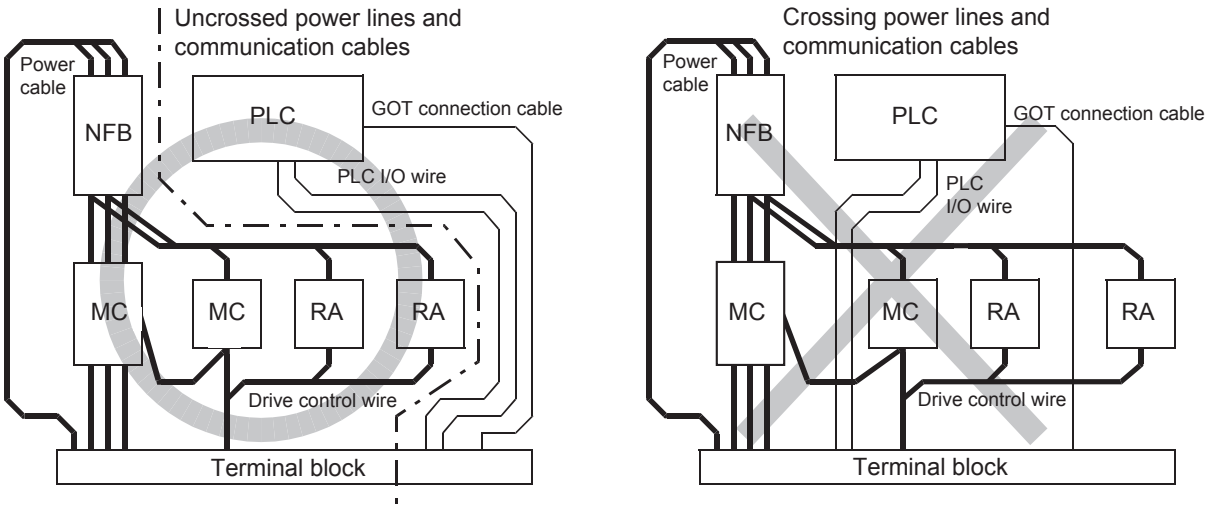

9.3.2 Outside the panel

To pull the power line and communication cable out of the panel, make two pullout holes away from each other and pull the cables through.
Putting both cables through the same pullout hole will increase noise interference.

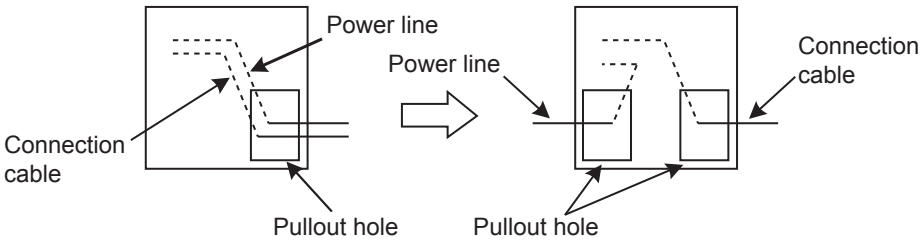

Keep the power line and communication cable inside the duct at least 100 mm away from each other.
If that is not possible, the use of a metal separator inside the duct can reduce noise interference.

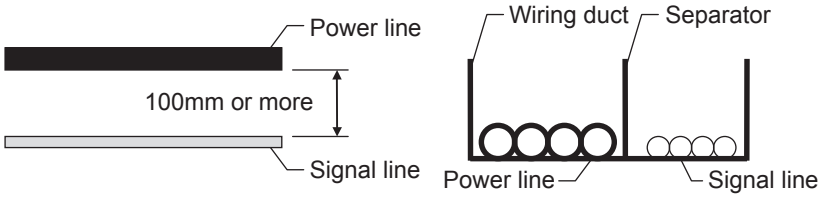

9.3.3 Attaching surge killers to control equipment

If communication errors happen in synch with the on/off signals from certain control equipment (referred to as "load" hereafter) such as no fuse breakers, electromagnetic contactors, relays, solenoid valves, and induction motors, surge noise interference is suspected.
If this problem happens, keep the ground cable and communication cable away from the load.
If that is not possible, an installation of a surge killer will help reduce noise interference.
Place the surge killer as close to the load as possible.

Remedy for AC inductive load

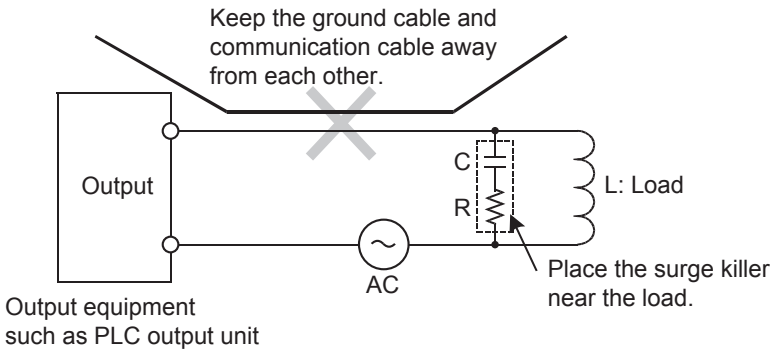

Remedy for DC inductive load

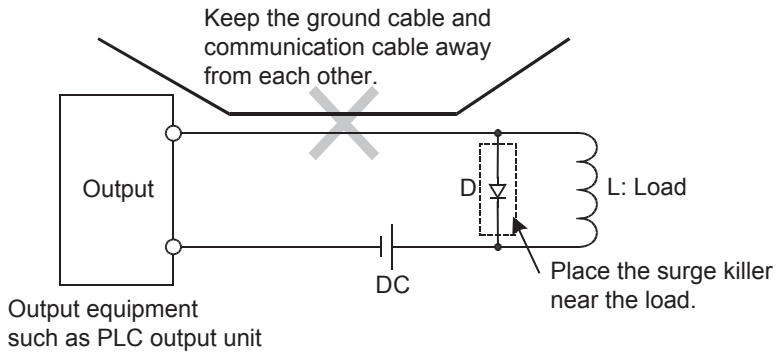

9.4 Switch Wiring

9.4.1 Overview for switch

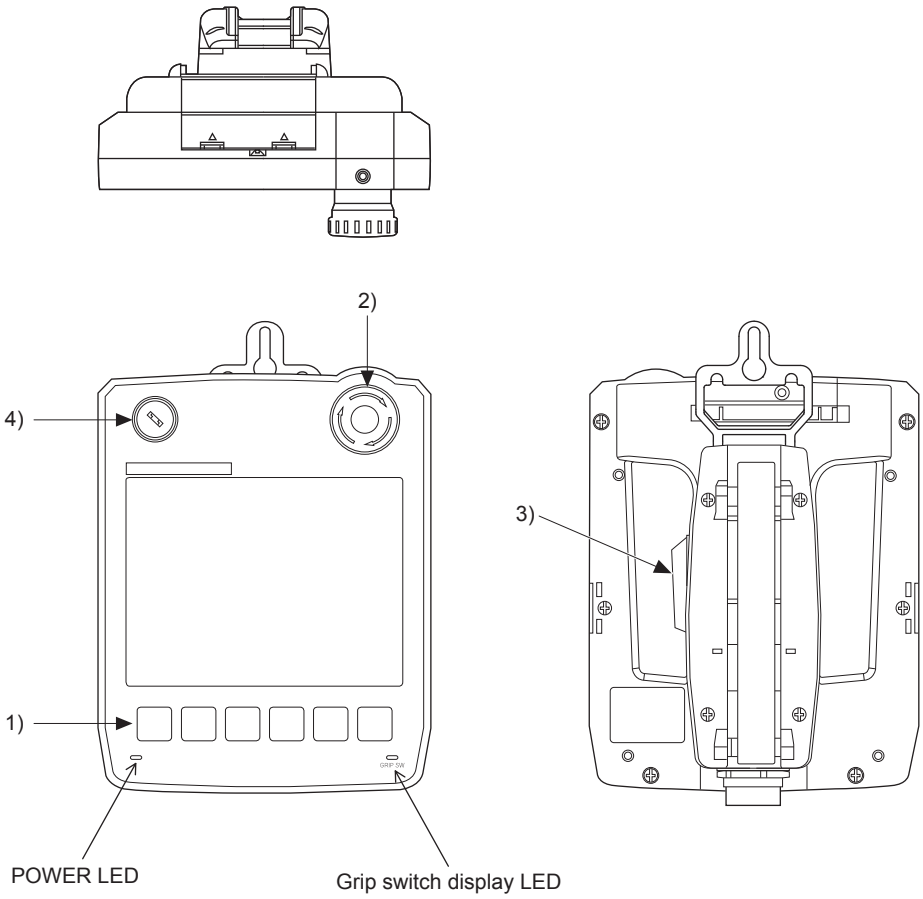

No.	Name	Abbreviations	Specifications
1)	Operation switch (6 switches)	SW1 to SW6	Switch for external direct wiring (independent contact) SW1 to SW6 (from left to right)
2)	Emergency stop switch	ES-1, ES-2, ES-3	Switch for external direct wiring (independent contact)
3)	Grip switch	DSW-1, DSW-2	Switch for external direct wiring (independent contact)
4)	Keylock switch (2-position SW)	KSW-1, KSW-2	Switch for external direct wiring (independent contact)

Switch

The following switches require the connection to a PLC or a controller through an external cable.

- Operation switch
- Emergency stop switch
- Grip switch
- Keylock switch (2-position SW)

LED

The independent wiring to control the LED is not required.

- Grip switch display LED

9.4.2 Switch wiring example

■ When connecting general load

(1) The connector conversion box GT16H-CNB-42S

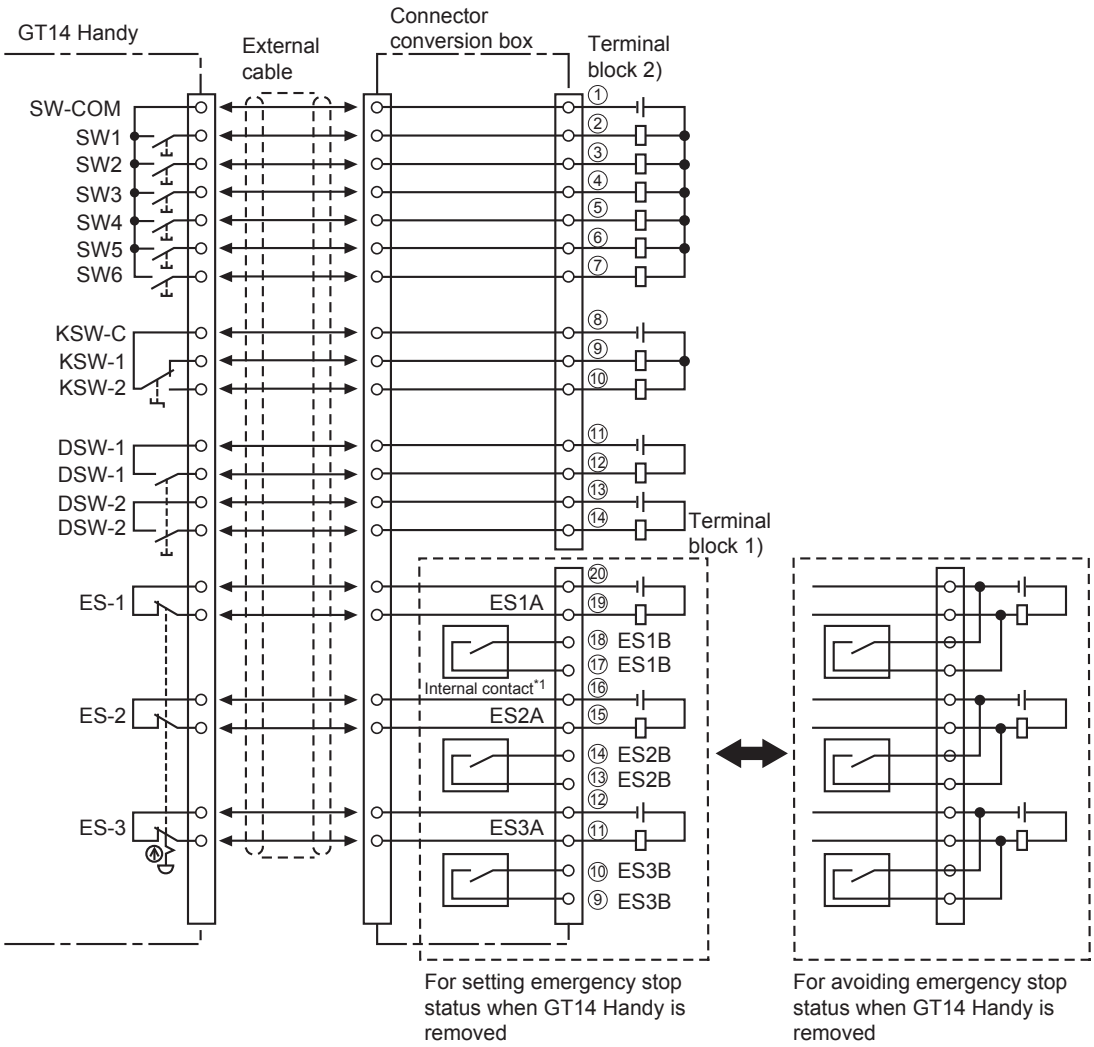

*1 The internal contact is closed when the power switch of the connector conversion box is turned OFF or the Connector Conversion Box is not supplied with the power (POWER LED turns off.)

(2) The connector conversion box GT11H-CNB-37S or GT16H-CNB-37S

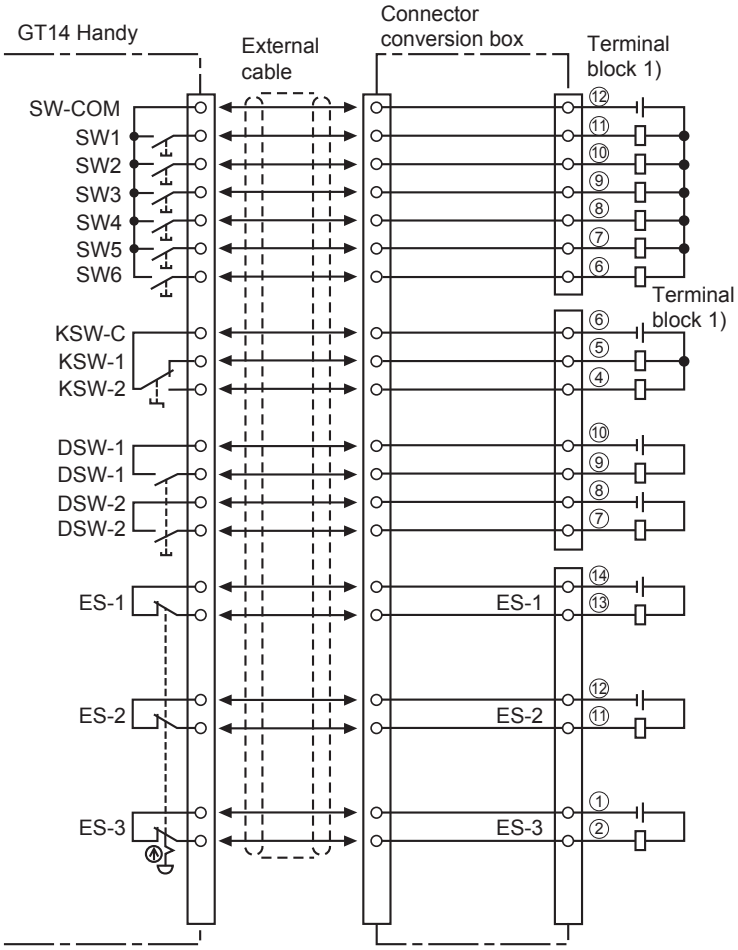

■ When connecting PLC input

(1) The connector conversion box GT16H-CNB-42S

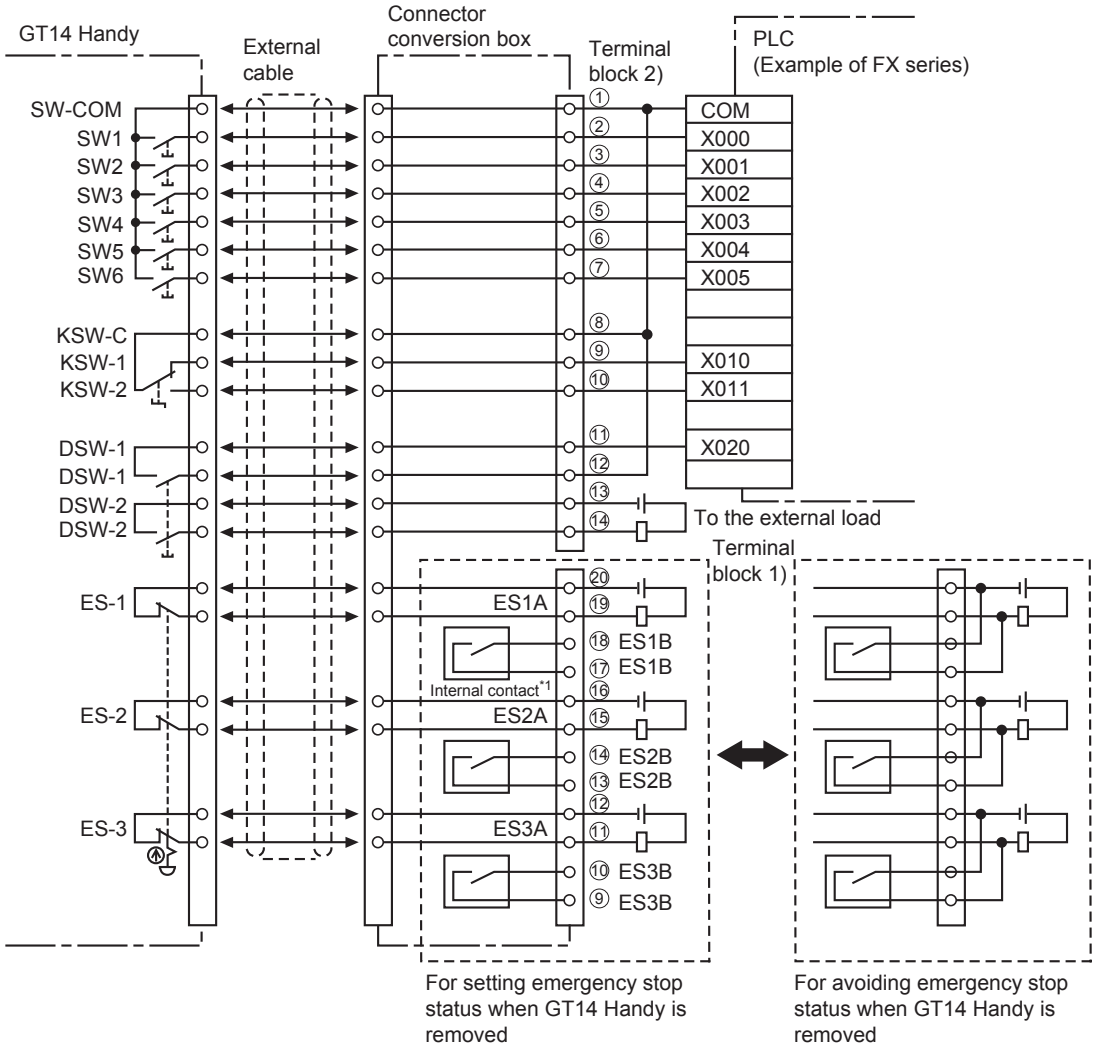

*1 The internal contact is closed when the power switch of the connector conversion box is turned OFF or the Connector Conversion Box is not supplied with the power (POWER LED turns off.)

(2) The connector conversion box GT11H-CNB-37S or GT16H-CNB-37S

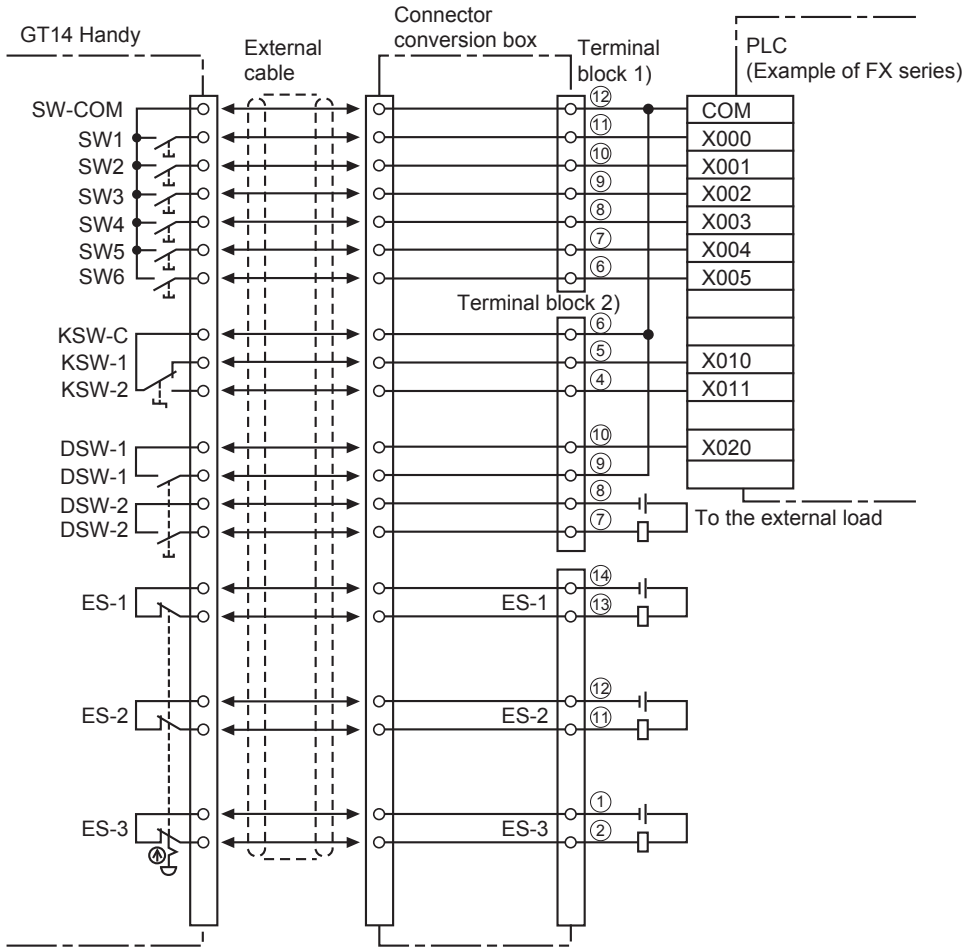

9.4.3 Operation switch wiring

The operation switch is connected to the PLC through an external cable and the Connector Conversion Box.

■ Connection example

(1) The connector conversion box GT16H-CNB-42S

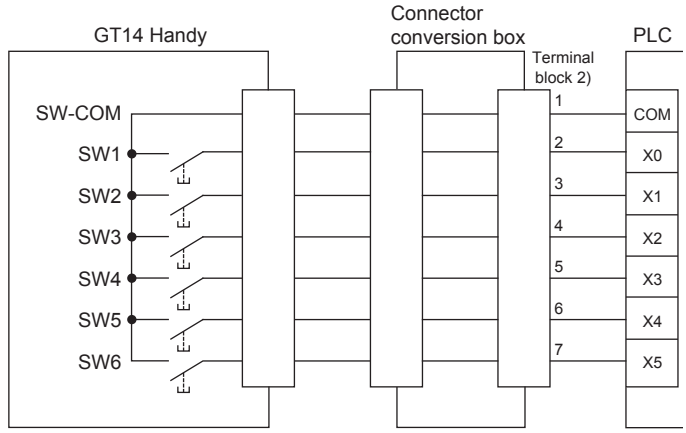

(2) The connector conversion box GT11H-CNB-37S or GT16H-CNB-37S

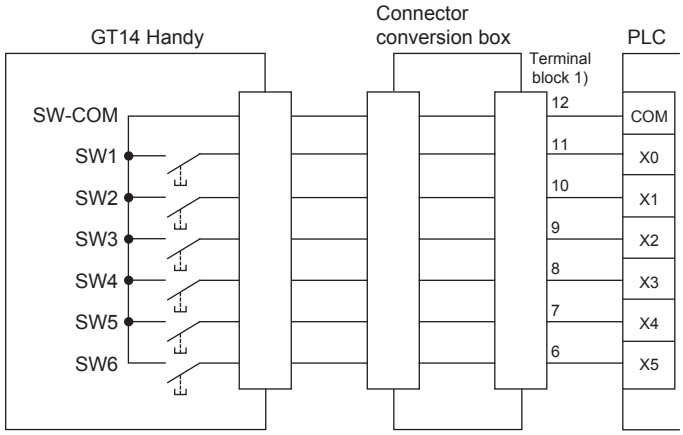

■ Pin layout

Model name		Terminal No.						
		SW-COM	SW1	SW2	SW3	SW4	SW5	SW6
Connector Conversion Box	GT16H-CNB-42S	Terminal block 2) 1	Terminal block 2) 2	Terminal block 2) 3	Terminal block 2) 4	Terminal block 2) 5	Terminal block 2) 6	Terminal block 2) 7
	GT11H-CNB-37S GT16H-CNB-37S	Terminal block 1) 12	Terminal block 1) 11	Terminal block 1) 10	Terminal block 1) 9	Terminal block 1) 8	Terminal block 1) 7	Terminal block 1) 6

9.4.4 Operation switch input

The operation switch (SW1 to SW6) can directly connect to the PLC input and be used in the sequence program as general input devices.

- The operation switch is loaded into the PLC as the momentary switch of the a contact.

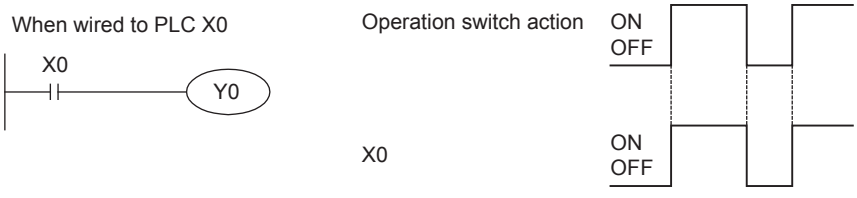

- In the case of handling the input as the b contact or the alternate switch, create the input in the sequence program.

9.4.5 Emergency stop switch wiring

The emergency stop switch is connected to the PLC with an external cable and the Connector Conversion Box.

- Use the emergency stop switch signal as control signals of external device power ON/OFF. Do not use it as the input signal of external device.
  When turning ON/OFF the external device power, set the load up to 24VDC/1A (contact specification).
- For the emergency stop circuit, be sure to configurate the circuit outside the PLC.
  (The example of when the connector conversion box is used)

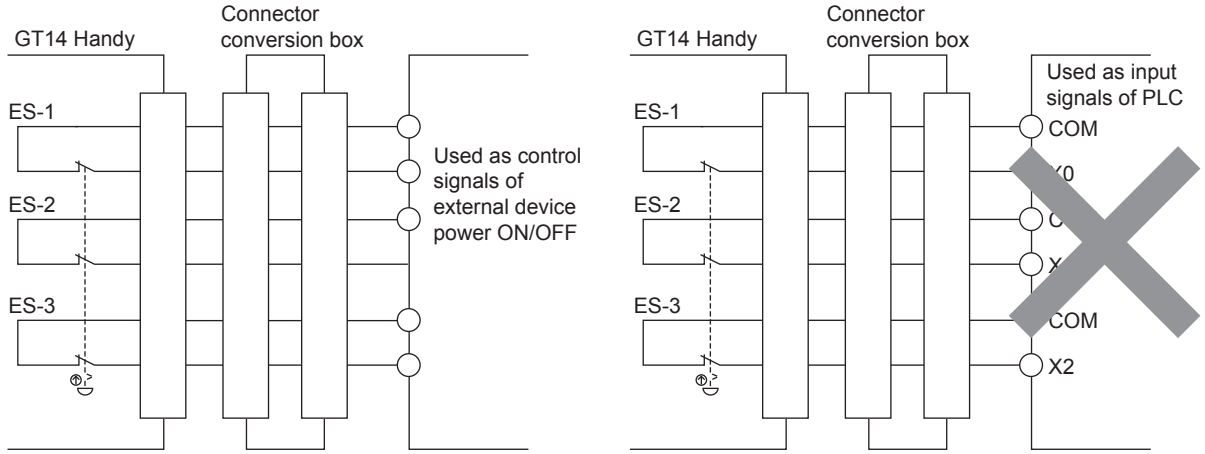

- For the emergency stop SW, the b contact type is used.
- When the Handy GOT is removed from the connector conversion box, the emergency switch goes off, and the Handy GOT goes into the same state as when the switch is pressed.
- The connector conversion box (GT16H-CNB-42S) and CC-Link interface unit (GT11H-CCL) contain a parallel circuit to avoid emergency stop while the Handy GOT is being removed.
- CC-Link interface unit (GT11H-CCL) does not require the wiring to the parallel circuit.
- The connector conversion box (GT16H-CNB-42S) requires the wiring to the parallel circuit.
- The connector conversion box (GT11H-CNB-37S or GT16H-CNB-37S) does not include the parallel circuit. To be prepared by the user.

■ Connection example

(1) When using the connector conversion box (GT16H-CNB-42S)

(a) When setting the Connector Conversion Box to the emergency stop state while Handy GOT is removed

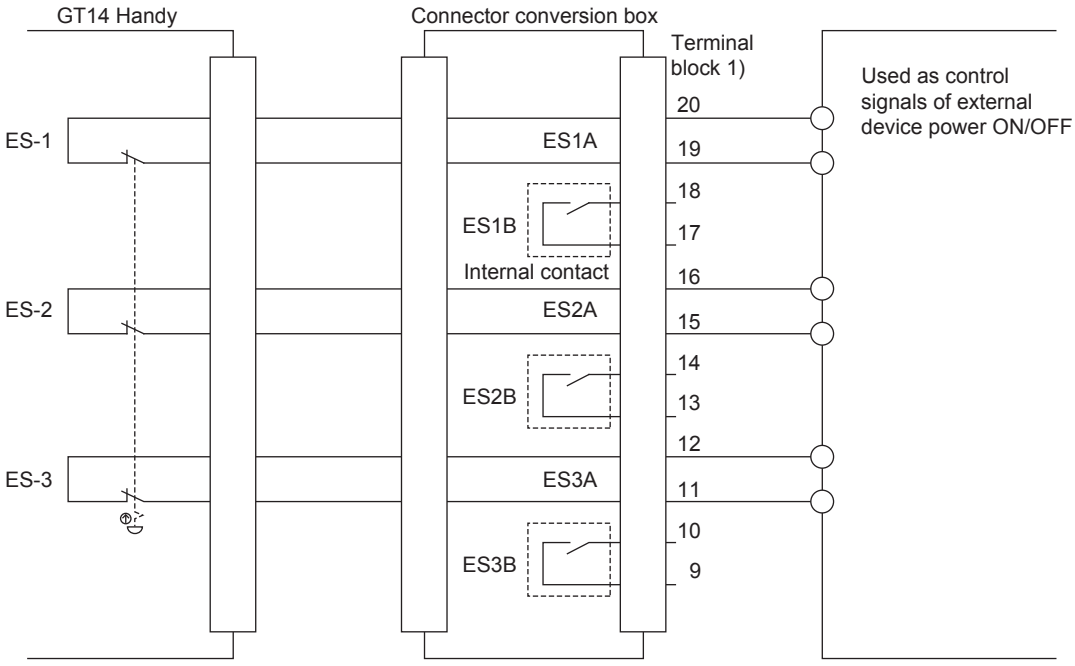

(b) When avoiding to set the Connector Conversion Box to the emergency stop state while Handy GOT is removed

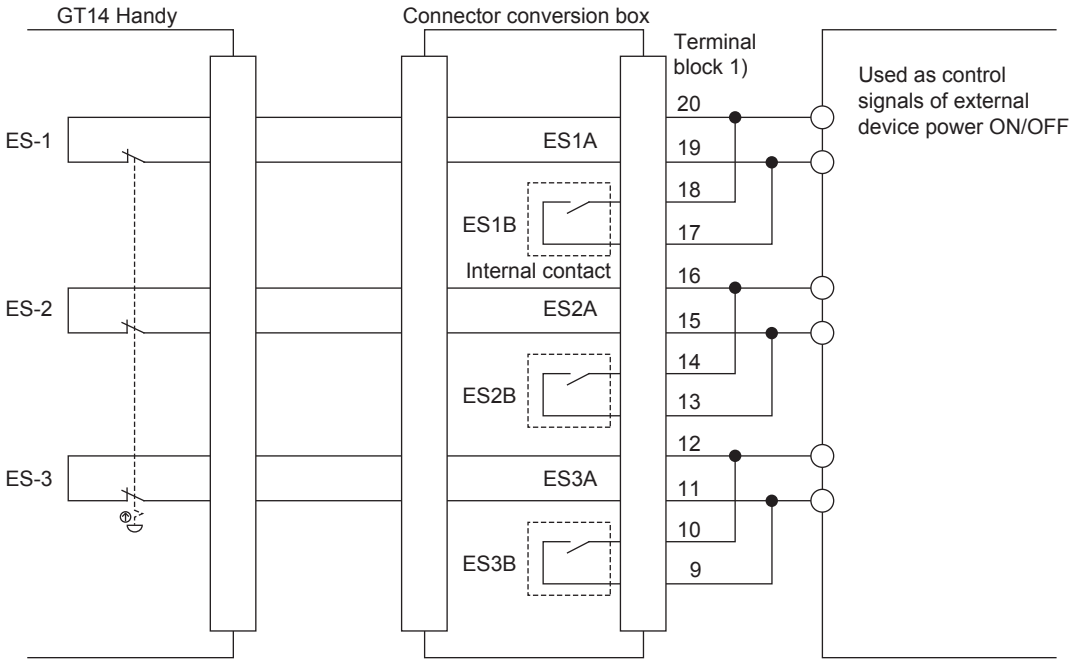

The internal contact operates as follows.

- When the Connector Conversion Box is supplied with the power and the power switch is ON (POWER LED turns on.) Since the internal contact opens and the insulation status occurs between ES ☐ Bs, the status between ES ☐ As coordinates with those of the emergency stop switch and the external cable.
- When the Connector Conversion Box is not supplied with the power and the power switch is OFF (POWER LED turns off.) Since the internal contact closes and the short-circuit status occurs between ES ☐ Bs, the status between ES ☐ As closes regardless of the status of the emergency stop switch and the external cable.

(2) When using the connector conversion box (GT11H-CNB-37S or GT16H-CNB-37S)

(a) When setting the Connector conversion box to the emergency stop state while Handy GOT is removed

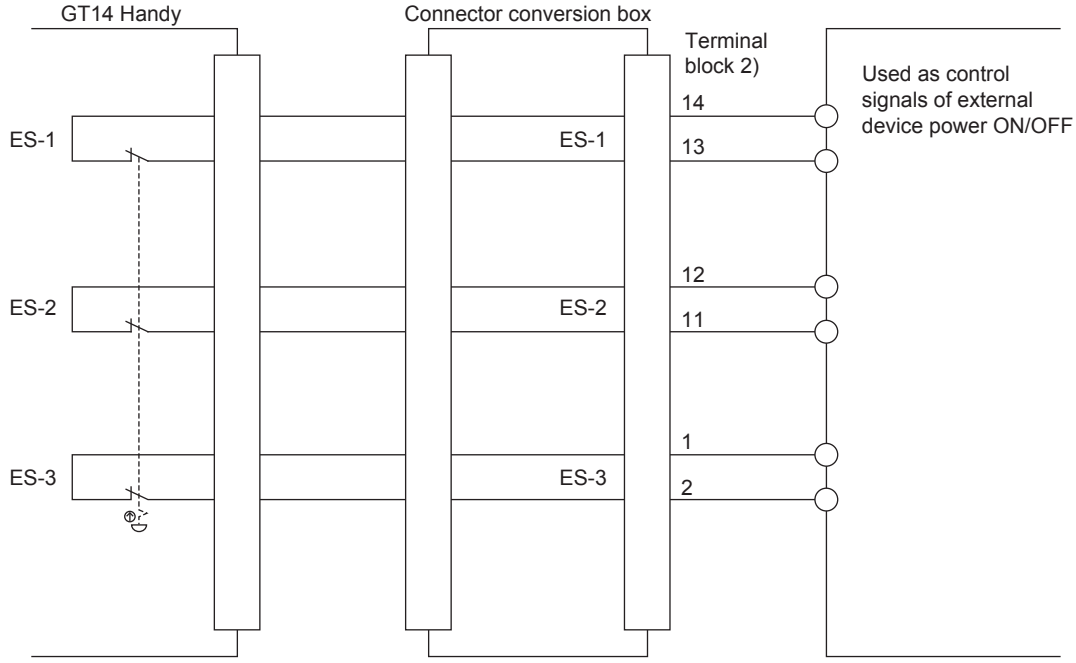

(b) When avoiding to set the Connector conversion box not to the emergency stop state while Handy GOT is removed

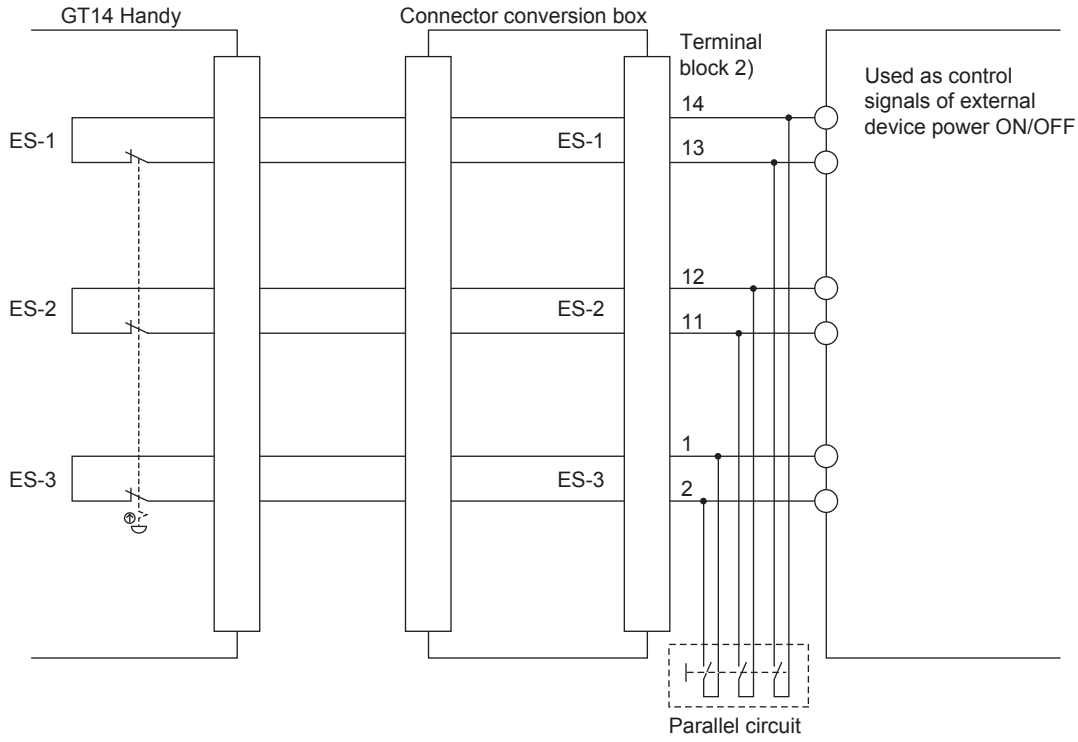

■ Pin layout

Model name		Terminal No.											
		ES1A or ES-1		ES1B		ES2A or ES-2		ES2B		ES3A or ES-3		ES3B	
Connector Conversion Box	GT16H-CNB-42S	Terminal block 1)		Terminal block 1)		Terminal block 1)		Terminal block 1)		Terminal block 1)		Terminal block 1)	
		20	19	18	17	16	15	14	13	12	11	10	9
	GT11H-CNB-37S GT16H-CNB-37S	Terminal block 2)		-		Terminal block 2)		-		Terminal block 2)		-	
		13	14			11	12			1	2		

POINT

Precautions when using the emergency stop switch

(1) When using the emergency stop switch of the Handy GOT, use the emergency stop switch according to your risk assessment.

(2) When using the parallel circuit (which sets the Connector Conversion Box to the emergency stop status while Handy GOT is removed), the system may not match the safety standards. Before using the system, please check the safety standards which are required.

(3) If a shock which exceeds the general specifications of the Handy GOT is applied, a chattering may occurs in the emergency stop switch due to the structure of the switch. Check your usage condition and decide whether to use or not.

9.4.6 Grip switch

The grip switch is on the side surface of the Handy GOT and wired to the input of PLC, etc.

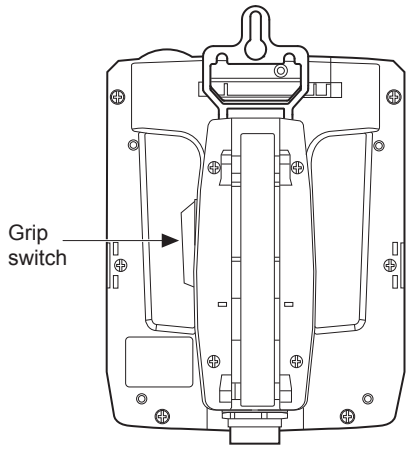

The grip switch is the 3-position system switch and makes the ON/OFF state of Handy GOT as shown below.

Side surface of grip switch

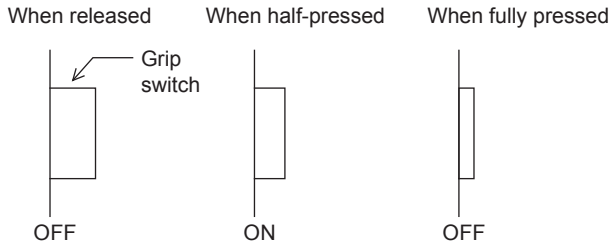

9.4.7 Grip switch wiring

The grip switch is a switch with two circuits of the above 3-position system a contact.

■ Connection example

(1) When using the connector conversion box (GT16H-CNB-42S)

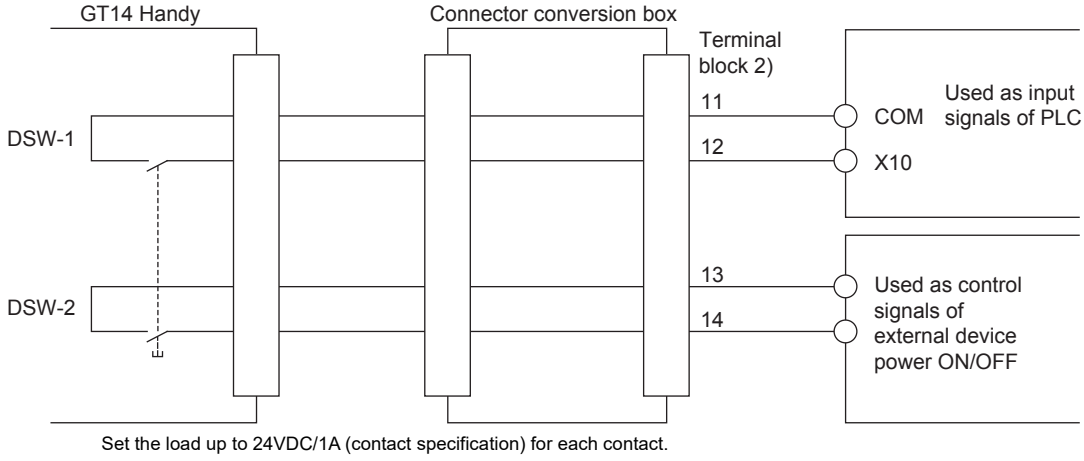

Set the load up to 24VDC/1A (contact specification) for each contact.

(2) When using the connector conversion box (GT11H-CNB-37S or GT16H-CNB-37S)

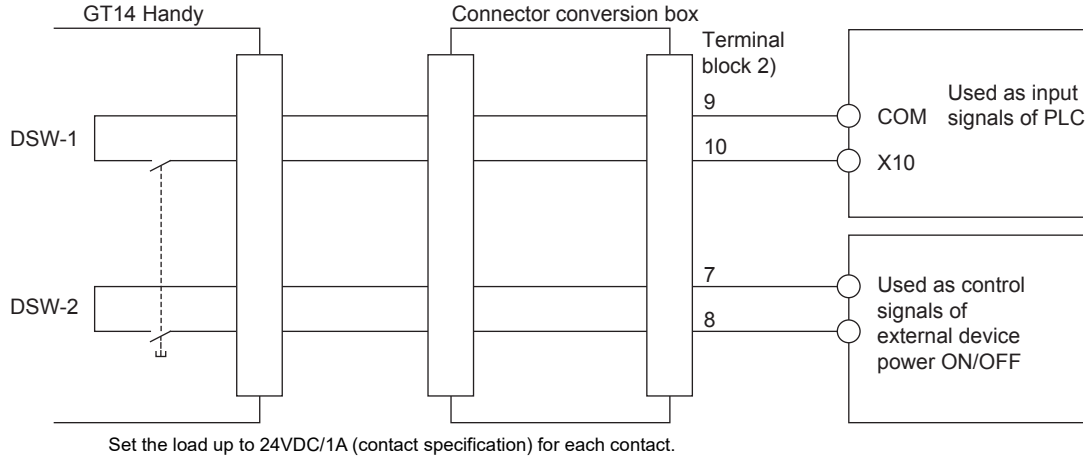

Set the load up to 24VDC/1A (contact specification) for each contact.

■ Pin layout

Model name		Terminal No.			
		DSW-1	DSW-1	DSW-2	DSW-2
Connector Conversion Box	GT16H-CNB-42S	Terminal block 2) 11	Terminal block 2) 12	Terminal block 2) 13	Terminal block 2) 14
	GT11H-CNB-37S GT16H-CNB-37S	Terminal block 2) 9	Terminal block 2) 10	Terminal block 2) 7	Terminal block 2) 8

9.4.8 LED settings of grip switch

Grip switches (DSW1, DSW2) contain green LED for checking operation.The grip switch LED coordinates with b6 of the external input and output function/output information (read device +1) and operates the LED ON/OFF display.

■ Allocation of device to control LED

The device to control LED is allocated by the drawing software. The external input and output function/output information (read device +1) set in [read device] of [system information function] in the [common settings] is allocated to the LED control.
The LED control for the grip switch is allocated to b6 (7th bit from the lower) of the device allocated to the external input and output function/output information. The LED is lit when the bit value is 1 and not lit when the bit value is 0.

External input and output function/output information (read device +1)

b15	b14	b13	b12	b11	b10	b9	b8	b7	b6	b5	b4	b3	b2	b1	b0
									Grip switch						

For example, when D100 is set in the read device of system information, the value in b6 of D101 is reflected to the LED lit/not lit.

9.4.9 Keylock switch (2-position SW)

The keylock switch (2-position SW) is used with wiring to the input of PLC

■ Connection example

The following describes the connection example when the notch of the switch is set to the left.
Set the load up to 24VDC/1A (contact specification) for each contact.

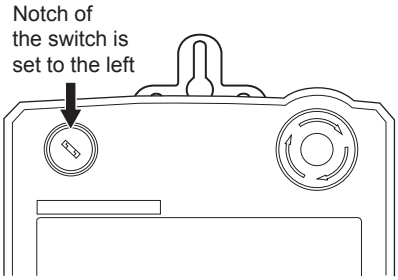

(1) When using the connector conversion box (GT16H-CNB-42S)

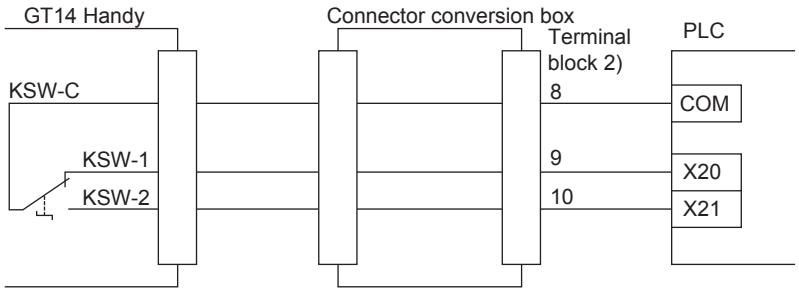

(2) When using the connector conversion box (GT11H-CNB-37S or GT16H-CNB-37S)

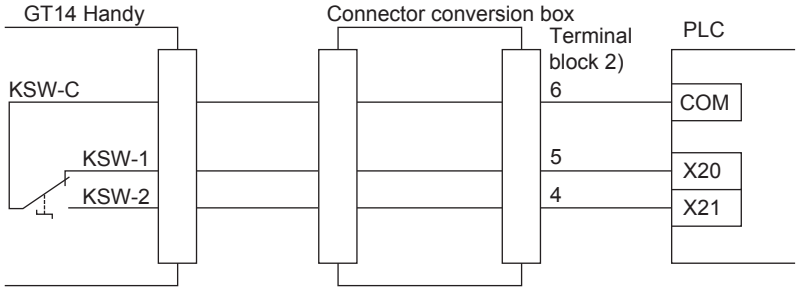

■ Pin layout

Model name		Terminal No.		
		KSW-C	KSW-1	KSW-2
Connector Conversion Box	GT16H-CNB-42S	Terminal block 2) 8	Terminal block 2) 9	Terminal block 2) 10
	GT11H-CNB-37S GT16H-CNB-37S	Terminal block 2) 6	Terminal block 2) 5	Terminal block 2) 4

10. UTILITY FUNCTION

Utility is a function, which carries out connection of GOT and PLC, screen display and operation method settings, program/data control and self-check etc.

For the utility function list, refer to the following.

☞ 10.2 Utility Function List

10.1 Utility Execution

For utility execution, utility has to be displayed by installing BootOS and Standard monitor OS in the C drive (Flash memory).

There are following three types for the installing Standard monitor OS methods.

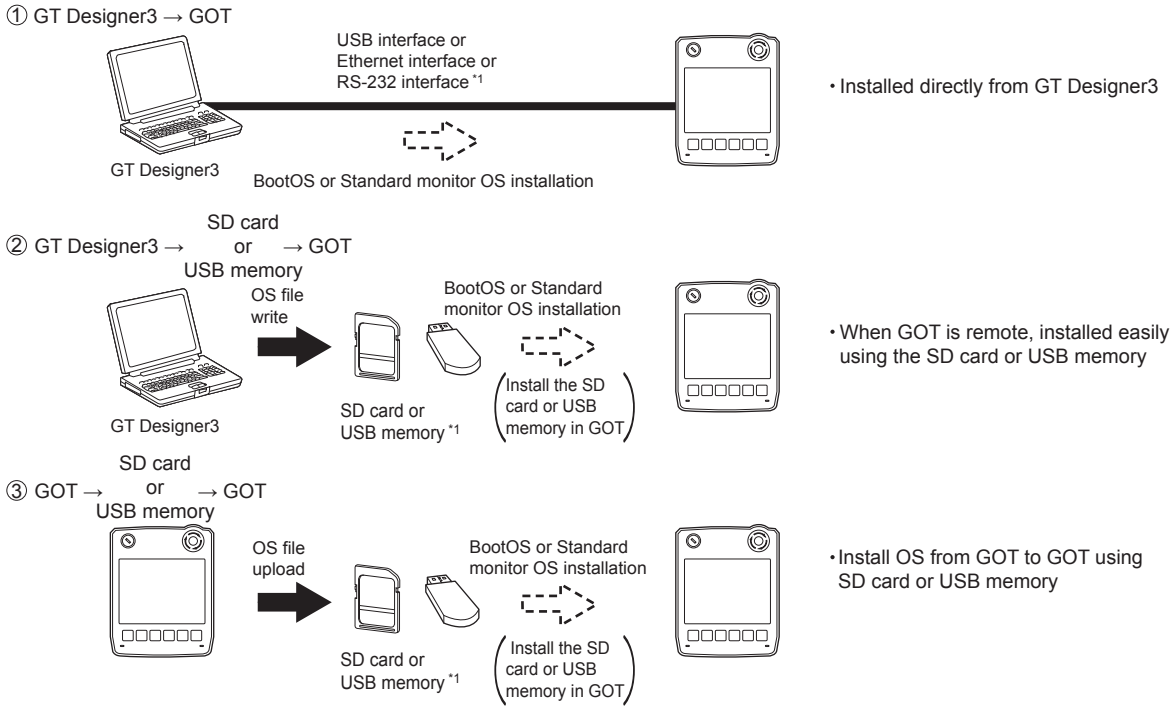

*1 When installing the BootOS and standard monitor OS, standard monitor OS has to be installed in GOT in advance.

For the installation which uses GT Designer3, refer to the following.

☞ GT Designer3 Version1 Screen Design Manual (Fundamentals)

For the installation which uses GOT, refer to the following.

☞ 17. INSTALLATION OF COREOS, BOOTOS AND STANDARD MONITOR OS

10.2 Utility Function List

The items in the following list can be set/operated on the utility screens.

Item		Functions overview	Reference
Communication setting	Communication setting	Assigning channel numbers and communication drivers to communication interfaces	11.
		Setting communication parameters Setting or deleting sequence program protection key words, canceling sequence program protection status (When connecting to FX series CPU)	
	Ethernet setting	Displaying the contents of Ethernet setting, changing the host	11.
GOT setup	Display	Switching message languages	12.1
		Setting the startup screen display time and screen saving time	
		Setting the backlight to ON or OFF during screen saving	
		Setting the battery alarm display to ON or OFF	
		Adjusting brightness and contrast	
		Inverting colors	
	Operation	Setting the buzzer volume and window move buzzer	12.2
		Setting the key sensitivity and key reaction speed	
		Changing security levels	12.2.4
		Setting the utility call keys	12.2.5
		Adjusting the touch panel	12.2.6
		Setting the USB mouse and keyboard	12.2.7
		VNC® server function setting	12.2.8
	Transparent mode	Setting the channel No. to be used for the communication for the FA transparent function	12.3
	Backup/restoration	Setting the storage locations for backup data and backup settings, and setting the maximum number of backup data	12.4
		Trigger backup settings	
		Setting the CPU No. setting at backup to "YES" or "NO"	
	Behavior of duplicate IPs	Setting the GOT operation when a device with the same IP address as that of the GOT is added to the network afterwards	12.5
	License management	Displaying the screen for license registration and deregistration	12.6
Time setting & display		Selecting a base clock	13.
		Displaying the clock current time	
		Setting the clock current time	
		Displaying the battery status	

Item			Functions overview	Reference
Program/data control	OS information		Installing or uploading OS, displaying OS property, checking OS data	14.2.1
	Alarm information		Deleting and copying alarm log files Converting alarm log files in G1A format → CSV or TXT format	14.2.2
	Project information		Downloading, uploading, deleting or copying project files, displaying project file property, checking project file data	14.2.3
	Hard copy information		Deleting or copying hard copy files, changing hard copy file names	14.2.4
	Advanced Recipe information		Converting advanced recipe files in G1P format → CSV or TXT format Converting CSV or TXT format → Advanced recipe files in G1P format Deleting, copying or moving advanced recipe files, creating a new advanced recipe file Deleting or moving advanced recipe folders, changing advanced recipe folder names, creating a new advanced recipe folder Writing, reading or matching record data and deleting device values with the advanced recipe record list	14.2.5
	Logging information		Converting logging files in G1L format → CSV or TXT format Deleting, copying or moving logging files, changing logging file names Deleting logging folders or creating a new logging folder	14.2.6
	Memory card format		Formatting a SD card or USB memory, internal SRAM	14.2.7
	Memory information		Displaying the available memory of the GOT	14.2.8
	USB device status display		Displaying the status of USB device	14.2.9
	SRAM control		Confirming the SRAM user area usage, backing up or restoring the data in the SRAM user area, and initializing the SRAM user area	14.2.10
	GOT data package acquisition		Copying the OS, special data, and project data to a SD card or USB memory	14.2.11
Debug & self check	Debug	System monitor	Device monitor of PLC, test function, present value change of the buffer memory monitor and the buffer memory of intelligent module	15.1.1
		A list editor	Sequence program and parameter change of ACPU	15.1.2
		FX list editor	Sequence program and parameter change of FX PLC	15.1.3
		Backup/restoration	Executing backups, executing restorations, and deleting backup data	15.1.4
	Self check	Memory check	Memory check of A drive, C drive, D drive, and E drive	15.2.1
		Display check	Drawing check	15.2.2
			Font check	15.2.3
		Touch panel check	Touch panel operation check	15.2.4
		I/O check	Connected target confirmation, self-loopback check	15.2.5
		Ethernet status check	Sends a ping to check the Ethernet connection status	15.2.6
	System alarm display		Displaying GOT errors and CPU errors, resetting GOT errors	15.3
	GOT start time		Displaying GOT start date and time, current time, accumulated operating hours	15.4
Clean	Clean		Displaying the screen for cleaning the display	16.

10.3 Utility Display

To display setting screens for each utility, the main menu must be displayed first.

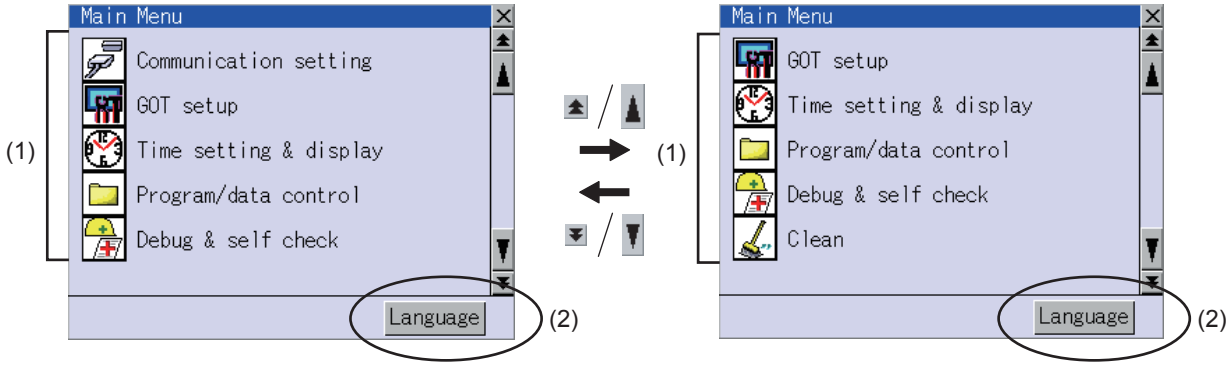

(1) Main menu
The menu items that can be selected from the GOT utility are displayed.
Touching a menu item in the main menu displays the setting screen or following selection screen for the item.

(2) System message switch button
This button switches the language used for the utility screen and system alarms.
Touching the [Language] button displays the Select Language screen.

1. Touch the button of a desired language and then [OK] button, and the language is selected.
2. Touching the [×] button restarts the GOT and the language of the utility is switched to the selected one.

POINT

When starting the GOT without selecting any language or the selected language and the installed fonts are not matched.

The following screen is displayed.
Touching the button of a desired language restarts the GOT and the language is switched to the selected one.

HINT

(1) Selectable languages
The system message switch button is displayed only for the selectable languages.
The selectable languages differ depending on the fonts installed in the GOT.
For the relation between the selectable languages and the fonts, refer to the following.

☞ GT Designer3 Version1 Screen Design Manual (Fundamental) 2.5 Specifications of Applicable Characters

(2) System language switching using the device
The system language can be switched using the system language switching device set with GT Designer3.
For the setting method of the system language switching device, refer to the following.

☞ GT Designer3 Version1 Screen Design Manual (Fundamental)
4.3 Language Switching Device Setting (GOT Environmental Setting: Language Switching)

10.3.1 Display operation of main menu

The following four types of operation can display the main menu.
(Display the main menu after installing the Standard monitor OS from GT Designer3 to the built-in flash memory of the GOT.)

(1) When project data is undownloaded
After the GOT is turned on, a dialog box for notifying of absence of project data is displayed. After the dialog box is displayed, touch the OK button to display the main menu.

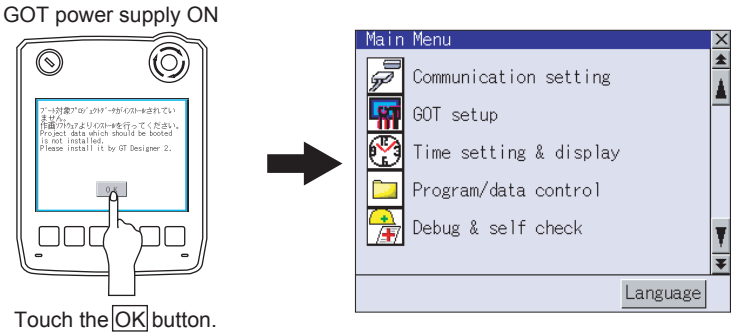

(2) When touching menu call key
Touching the menu call key while user-created screen is displayed displays the main menu.
The menu call key is set in the position on the GOT screen upper left corner at factory shipment.

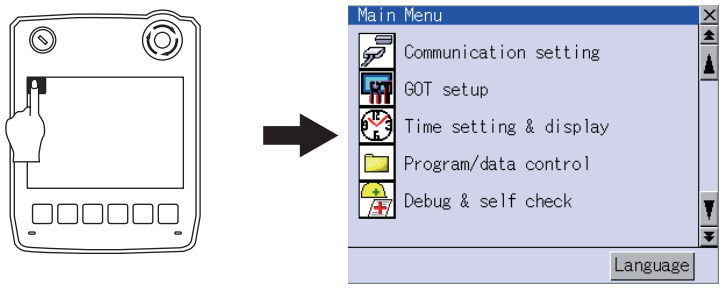

The menu call key can be set by the GOT utility or GT Designer3.
For menu call key setting, refer to the following.

☞ 12.2.5 Utility Call Key Setting

☞ GT Designer3 Version1 Screen Design Manual (Fundamental)
4.9 GOT Display and Operation Setting (GOT Environmental Setting: GOT Setup)

POINT

(1) Prohibited simultaneous 2-point presses
Do not touch 2 points or more on the GOT screen simultaneously. Touching 2 points or more simultaneously may activate a part other than the touched point.

(2) Pressing time of the utility call key
When having set [Pressing time] of the menu call key setting screen to other than "0 (s)", keep pressing the touch panel for the period set to [Pressing time] or more before leaving the finger from the touch panel.
For menu call key setting, refer to the following.

☞ 12.2.5 Utility Call Key Setting

(3) When the utility call key is set to the zero point
Even when the utility call key is set to the zero point, you can display the main menu using either of the following two operations:
- Pressing the special function switch set on the user-created screen
- Keeping pressing the upper left corner while the [Booting.] message is displayed after powering up.

(3) When touching special function switch (utility)

Touching the special function switch (utility) while user-created screen is displayed displays the main menu.
The special function switch (utility) can be set as a touch switch that is displayed on a user-created screen by GT Designer3.

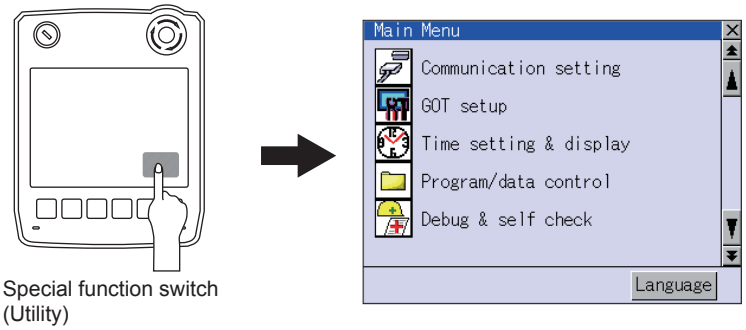

Special function switch (Utility)

For the details of the special function switch, refer to the following.

GT Designer3 Version1 Screen Design Manual (Functions)

(4) When powering ON the system

The [Booting.] message is displayed after powering up. After that, keep pressing the upper left corner to display the main menu.
If the upper left corner is pressed before the display of the [Booting...] message, the OS installation function starts. Therefore, press the upper left corner after the [Booting...] message is displayed.

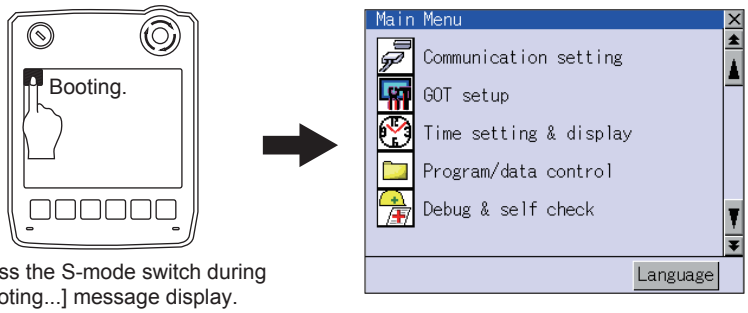

Press the S-mode switch during [Booting...] message display.

POINT

When limiting the display and operation of the utility

When limiting the display and operating users, set a password to the GOT using the GT Designer3. If a user tries to display the main menu of the utility, the password input screen is displayed.
For details on setting passwords, refer to the following.

GT Designer3 Version1 Screen Design Manual (Fundamentals)

10.3.2 Utility basic configuration

The basic configuration of the screen is as follows.

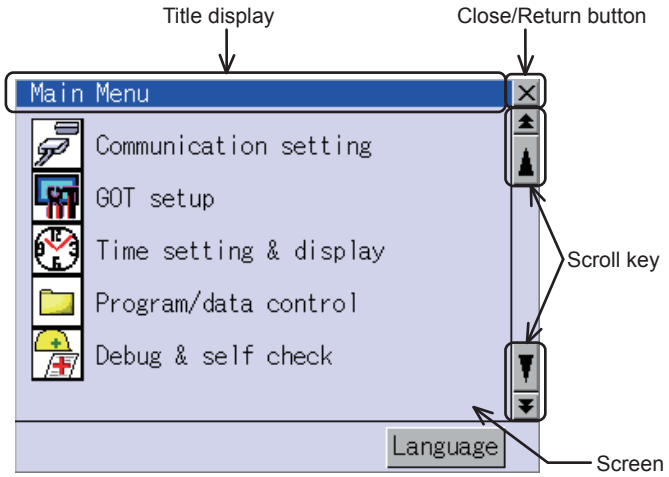

(1) Title display

The screen title name is displayed in title display part.

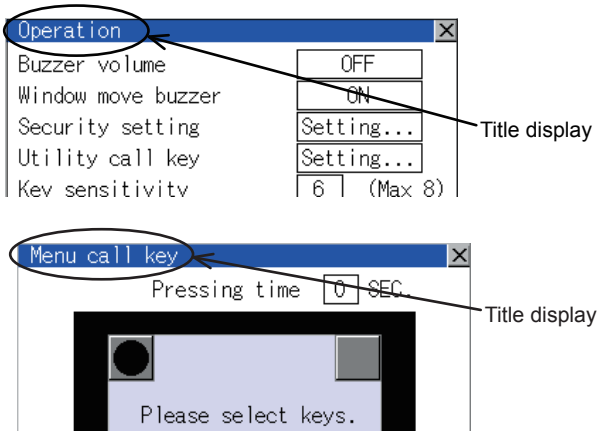

(2) Close/Return button

When a middle screen of the layers is displayed, if the [×] (Close/return) button in the right corner of screen is touched, returns to the previous screen.

If this button is touched when directly displayed from monitor screen, the screen is closed and returns to monitor screen.

(3) Scroll button

For screens in which the content does not fit on one screen page, there is a right or down scroll button on the screen.

Scroll one line/column

Scroll window

10.3.3 Basic operation of settings change

■ Change of setting value

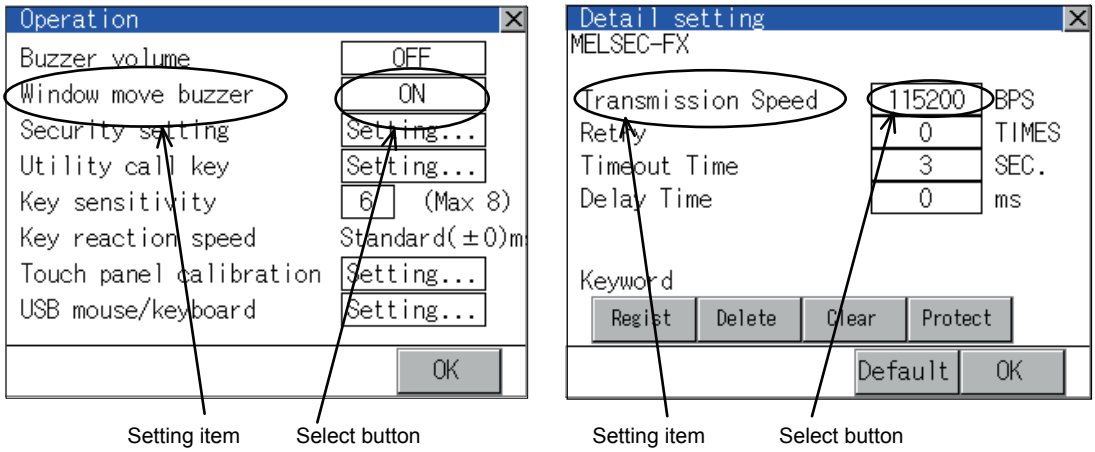

(1) Setting item, select button
Touch the select button to change the settings.
The setting methods differ depending on the setting items.
The following types of setting method are available.

(a) Switch the setting value.

Touch the button to switch the setting value as shown in ON OFF.

(b) Enter the setting value with a keyboard.
It is a key for inputting the numerical value. Touching this button displays a keyboard on the GOT screen.
For the operation of keyboard, refer to the next page.

(c) Move to another setting screen.
Touching this button moves to another setting screen.
For the setting method of each setting item, refer to the setting operation of each setting screen.

(2) [OK] button, [Cancel] button, [×] (Close/Return) button
Reflect or cancel the changed settings.

(a) [OK] button
Touching this button reflects the changed settings.

(b) [Cancel] button
Touching this button cancels the changed settings and return to the previous screen.

(c) [×] (Close/Return) button
Touching this button closes the screen. Depending on the setting item, the GOT restarts.
If [×] button is touched without touching [OK] button, the following dialog box will be displayed.
(If the settings are not changed, the dialog box is not displayed.)
Operate following the message of the dialog box.

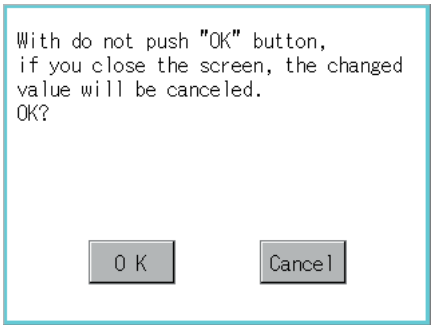

■ Keyboard operation

1. Touch the numerical value to be changed.

2. Keyboard for numerical input is displayed and cursor is displayed simultaneously.
   The key board display position changes by the position of numerical value touched.
   (At the time of numerical input, displayed in the position which will not interrupt the inputting.)

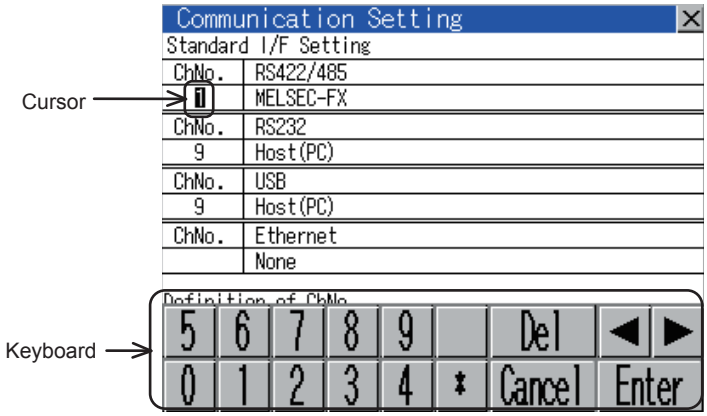

3. Input numeric with keyboard.
   - [0] to [9] Key: Input the numeric.
   - [Enter] Key: Completes numeric input and closes the keyboard.
   - [Cancel] Key: Cancels numeric input and closes the keyboard.
   - ◀ ▶ Key: Moves the cursor to the right or left side. (Available only if any selectable item is at the right/left side of the cursor.)
   - [Del] Key: [Del] key is used when canceling the input by 1 character.
   - [*] key and the key which is not mentioned do not function.

4. Touching [Enter] key completes numeric input and closes keyboard.

11. COMMUNICATION INTERFACE SETTING (COMMUNICATION SETTING)

In [Communication Setting], the communication interface names and the related communication channel, communication driver names display and channel numbers are set.
Moreover, in [Communication Detail setting], the communication interface details are set. (Communication parameters setting).

Function	Description	Reference
Communication Setting	The setting contents of the communication interface can be checked or changed.	11-1
Ethernet setting	The contents of the Ethernet setting can be checked and the host can be changed.	11-13

11.1 Communication setting

11.1.1 Communication setting functions

Function	Description
Channel-Driver assign	Change the assignment of channel No. and communication driver name.
Assign Ethernet I/F	Change the assignment of channel No. and communication driver name of the device connected using the Ethernet interface.
Channel No. (Ch No.) setting	Set the channel numbers of the communication interface (Standard interface).
Communication parameters setting	Set communication parameters of communication devices.

11.1.2 Display operation of Communication Setting

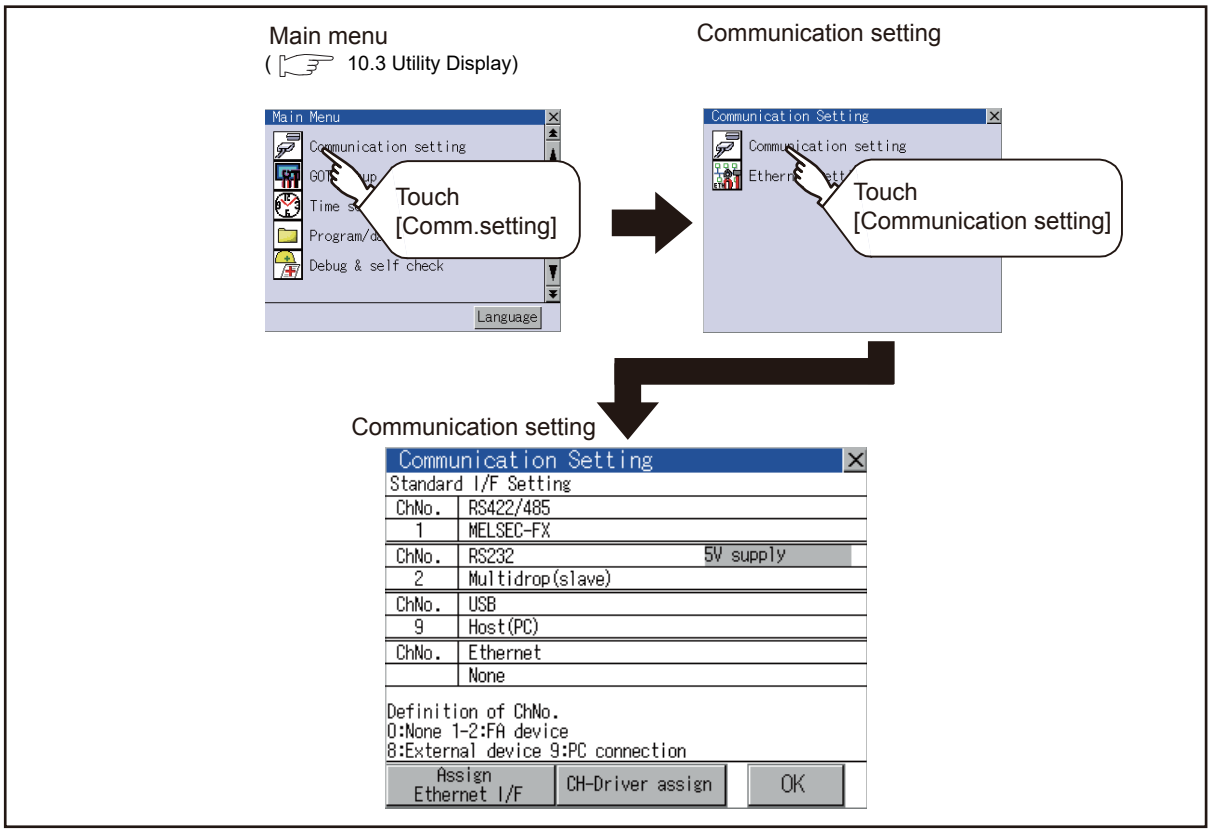

11.1.3 Communication setting contents

This section describes setting items and display contents for Communication Setting.

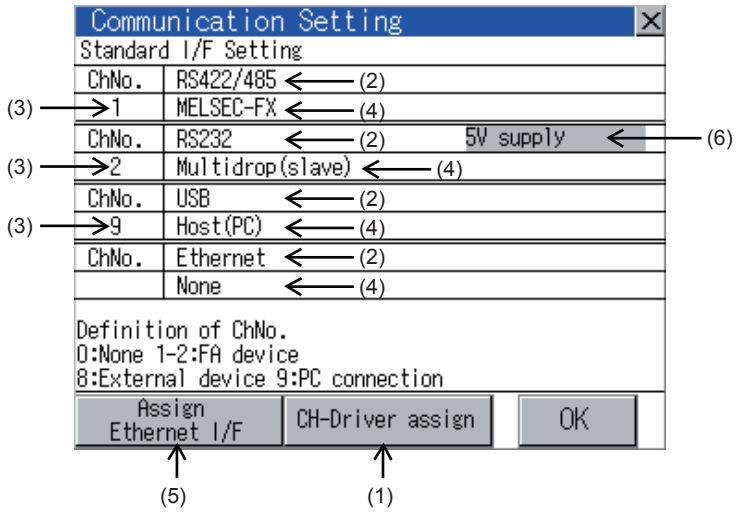

(1) Channel-Driver assign

Channel No. can be assigned to the communication driver installed in the GOT.

(a) Not writing [Communication Setting] in drawing software

Without writing [Communication Setting] in drawing software, communication with a controller is available after assigning the channel No. with this function.

☞ 11.1.4 ■Channel-Driver assign operation

(b) When changing the assignment of the communication driver to the channel in the Utility

Without using drawing software, the assignment of communication drivers to channels can be changed. (When changing a communication driver, the alternative communication driver has to be installed in GOT in advance.)

(2) Standard interface display BOX

Display the communication interface included as standard in GT14 Handy.

There are the following 4 types.

RS-232[*1] ..... For communicating with controller

RS-422[*1] ..... For communicating with controller

Ethernet[*1] ..... For communicating with PC (GT Designer3), controller

USB ..... For communicating with PC (GT Designer3)

*1 These cannot be used simultaneously.

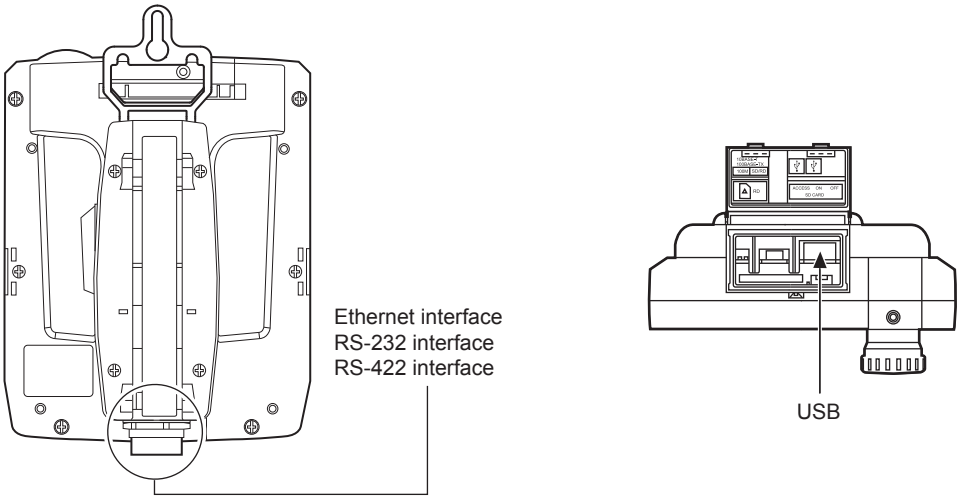

(3) Channel number specification menu BOX

Set channel No. to use with standard interface.

Refer to this section (4) for driver that can be assigned to each channel.

0:	Set when the communication interface is not used.
1, 2:	Set when connecting to a controller. (The GT14 Handy cannot use Ch No.1 and Ch No.2 simultaneously.)
8:	Set when connecting with a bar code reader or RFID. (The GT14 Handy cannot to a bar code reader or a RFID.)
9: *1	Set when connecting with PC (drawing software).
*:	Set when using the function that uses the gateway function (when connection types except the Ethernet connection is used for connecting to controllers), Ethernet download function.

- Fixed to 9 for the USB interface.

*1 Cannot be assigned with Ethernet I/F Assignment.

(4) Driver display BOX

The name of communication driver assigned to the channels or the driver set with the Communication Setting of drawing software is displayed.

For details of drivers to be displayed, refer to the following manual.

☞ GT Designer3 Version1 Screen Design Manual (Fundamentals)

Displays [None] in the driver display BOX in case of the following.

- The communication driver is not installed. (☞ 14.2.1 OS information)
- In channel number specification menu BOX, [0] is set.

When the channel number is set to [9] to RS-232 interface, the communication driver [Host (PC)] or [Host (model)] can be selected.

When the channel number is set to [9] to USB interface, the communication driver [Host (PC)] is automatically assigned.

(5) Assign Ethernet I/F

The communication settings for the Ethernet connection can be made.

Only Ethernet interface built-in model can display this button.

Ethernet I/F Assignment can assign up to two channels per interface.

☞ 11.1.4 ■Assign Ethernet I/F operation

POINT

Precautions for communications between GOT and controller

(1) Installing communication driver and downloading Communication Setting

The following below is required for the communication interface to communicate with the controller.

1) Installing communication drivers (Up to 4 communication drivers)
2) Assigning the channel number and communication driver for the communication interface
3) Downloading the contents (project data) assigned in 2).

Perform1), 2), 3) by drawing software.

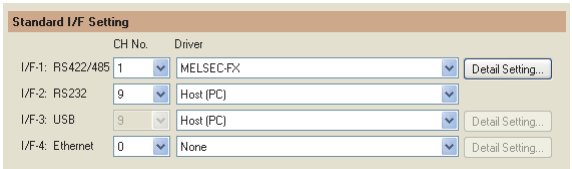

For details, refer to the following.

☞ GT Designer3 Version1 Screen Design Manual (Fundamentals)

(2) When Communication Setting has not been downloaded.

When [Communication Setting] has not been downloaded using drawing software, make the communication settings in the drawing software or on the utility screen of the GOT.

11.1.4 Communication setting operation

■ Channel-Driver assign operation

The following describes how to operate the Channel-Driver assign.
The example of changing to the direct CPU connection (Communication driver: [A/QnA/L/QCPU, LJ71C24, QJ71C24]) for the GOT of the computer link connection (Communication driver: [AJ71QC24, MELDAS C6*]) is used.

POINT

Before starting operation

After Communication Setting is executed, the GOT automatically restarts.
If the project data is downloaded, GOT starts monitoring the communication device after restarting.
Execute this setting after carefully confirming the safety.

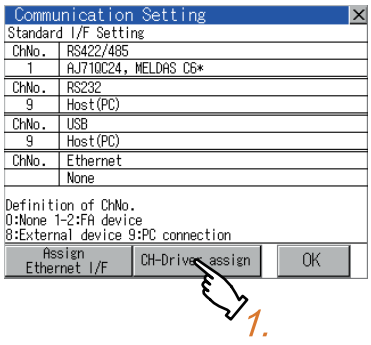

1. Install communication driver [A/QnA/L/QCPU, L/QJ71C24] to GOT.
(Download of [Communication Setting] from drawing software is not required.)
After installing communication driver, touch the [Channel Driver assign] button in [Communication Setting].

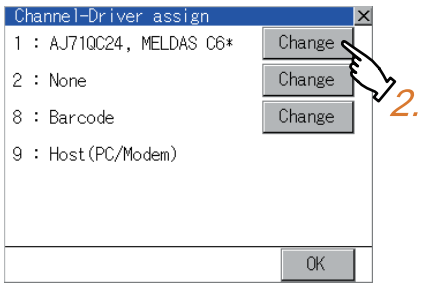

2. Touch the [Change assignment] button on the displayed screen as shown left.

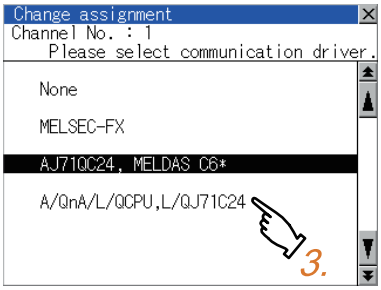

3. As the communication driver ([A/QnA/L/QCPU, L/QJ71C24]) installed in the GOT is displayed, touch it.

(Continued to next page)

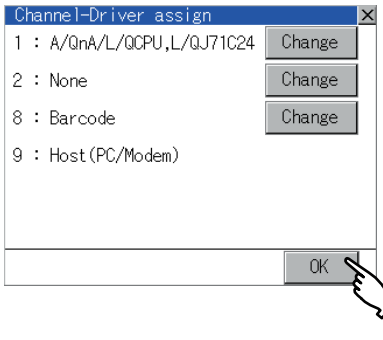

4. The screen returns to the [Channel-Driver assign] screen and touch the [OK] button.

5. Touch [×] button to return to the [Communication Setting] screen.

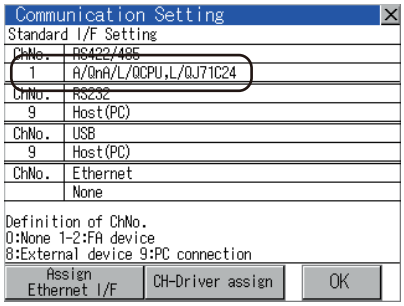

6. Confirm that the selected communication driver ([A/QnA/L/QCPU, L/QJ71C24]) is assigned.

7. After confirming, touch the [OK] button.

8. Touching the [×] button restarts the GOT and the GOT operates with the changed settings.

■ Channel number setting operation

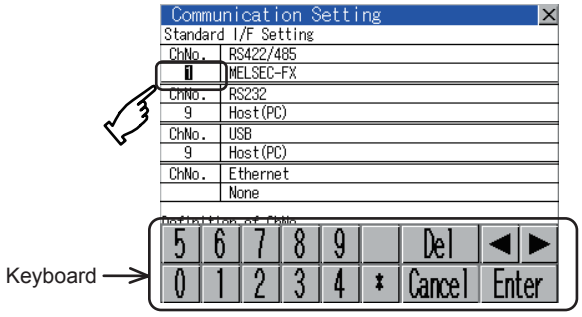

1. Touch channel number specification menu BOX to be set.

2. The cursor for the channel number specification menu BOX is displayed.
Simultaneously the keyboard for a numerical input is displayed.

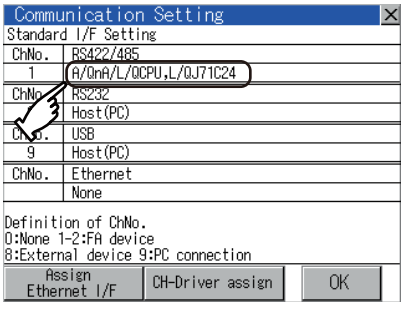

3. Input the channel number from the keyboard and touch [Enter] key, and the value is defined.
Simultaneously, the name of the communication driver corresponding to the channel number assigned by drawing software is displayed in the driver display BOX.

■ Communication detail setting switching operation

If the driver display BOX is touched on the communication setting screen or Ethernet I/F assign screen, the screen switches to the detailed setting screen of the related controller device.

(11.2 Communication Detail Setting)

■ Assign Ethernet I/F operation

The following describes how to operate the Ethernet I/F assign.
The setting operation is same as that of the communication setting screen.

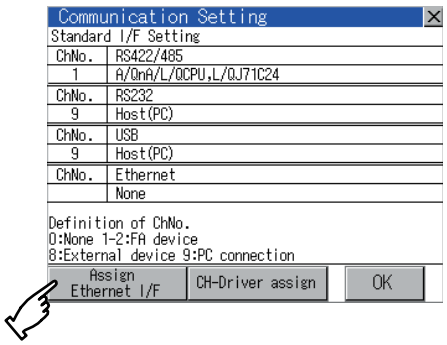

1. Touch the [Assign Ethernet I/F] button in [Communication Setting].

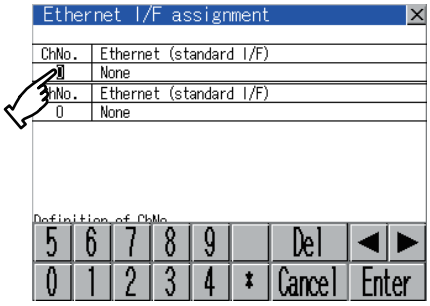

2. After the screen shown left is displayed, touch the channel number specification menu BOX when changing the channel number.
(11.1.4 ■Channel number setting operation)

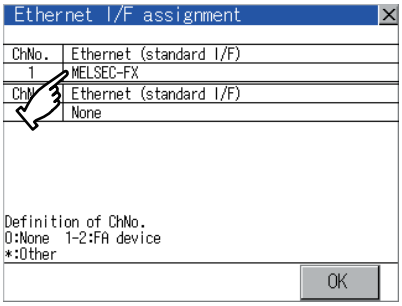

3. For changing the parameter settings, touch the driver display BOX.
(11.2 Communication Detail Setting)

4. Touching the [OK] button reflects the changed settings. Touching [×] button returns the screen to the [Communication Setting] screen.

5. Touch the [OK] button in the [Communication Setting] screen.

6. Touching the [×] button restarts the GOT and the GOT operates with the changed settings.

11.2 Communication Detail Setting

11.2.1 Communication detail setting functions

Function	Description
Communication parameters setting	Set various communication parameters of communication devices. The settable parameters differ according to the communication device.
Keyword Register	For the FX series PLCs, key word for protecting program in the PLC can be set.
Keyword Delete	For the FX series PLCs, key word for protecting program in the PLC can be deleted.
Keyword Clear	For the FX series PLCs, the program protection status in the PLC can be cancelled.
Keyword Protect	For the FX series PLCs with the 2nd keyword in use, the cancelled program protection in the PLC can be reactivated.

11.2.2 Display operation of Communication Detail setting

■ Communication settings

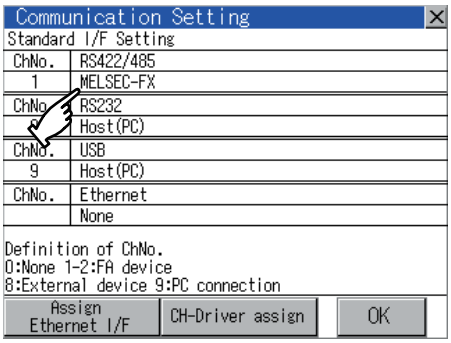

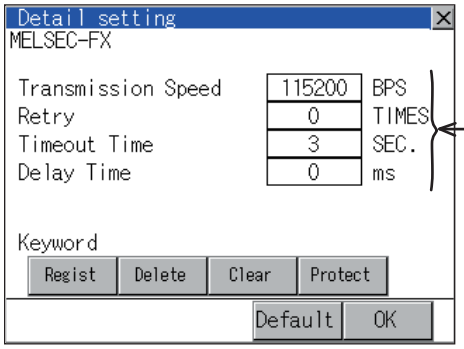

1. Touch the driver display BOX of the communication parameter to be set in the [Communication setting] screen.

2. The screen switches to the [Communication Detail setting] screen.
Set communication parameters from this screen.
For the setting change operation, refer to the following.
☞ 10.3.3 Basic operation of settings change

POINT

Communication parameter setting by drawing software

Select [Common Settings] → [Communication Settings] from GT Designer3 to enter the communication parameters for each communication driver.
When changing the communication parameters after downloading project data, change the setting at communication detail setting of GOT.

☞ GT Designer3 Version1 Screen Design Manual (Fundamentals)

■ Assign Ethernet I/F

Several drivers are assigned to the same Ethernet interface. However, only one GOT IP address is assigned per interface.

By changing the settings of one interface, the GOT IP address, GOT port No. download, default gateway and subnet mask settings of other drivers, which are assigned to the same interface, are also changed.

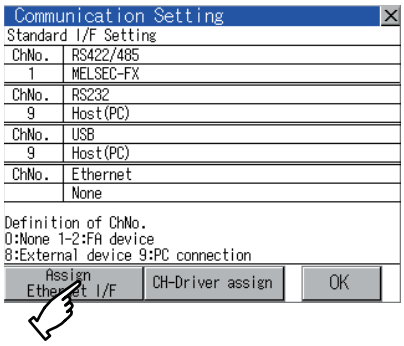

1. Touch the [Assign Ethernet I/F] button in Communication Setting.

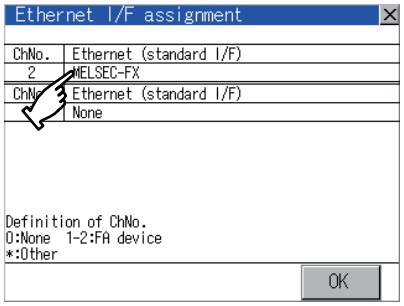

2. Touch the driver display BOX of the communication parameter to be set in Ethernet I/F assignment.

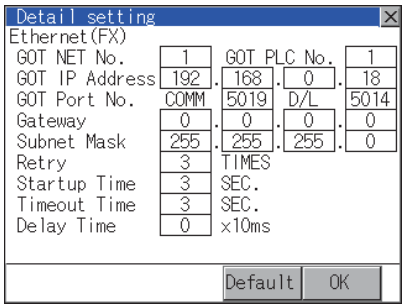

3. The screen switches to the [Communication Detail setting] screen.
Set communication parameters from this screen.
For the setting change operation, refer to the following.

☞ 10.3.3 Basic operation of settings change

POINT

Communication parameter setting by drawing software

Select [Common Settings] → [Communication Settings] from GT Designer3 to enter the communication parameters for each communication driver.

When changing the communication parameters after downloading project data, change the setting at communication detail setting of GOT.

☞ GT Designer3 Version1 Screen Design Manual (Fundamentals)

11.2.3 Display contents of Communication Detail setting

The contents of communication detail setting varies according to driver type.

This section explains setting items different from the communication detail setting of the drawing software.
For setting items other than described in this section, refer to the following manual.

GT Designer3 Version1 Screen Design Manual (Fundamentals)

■ Keyword settings of MELSEC-FX

On the communication detail setting screen of MELSEC-FX, registration, deletion, cancellation, or protection of the keyword for FX series PLC can be executed.

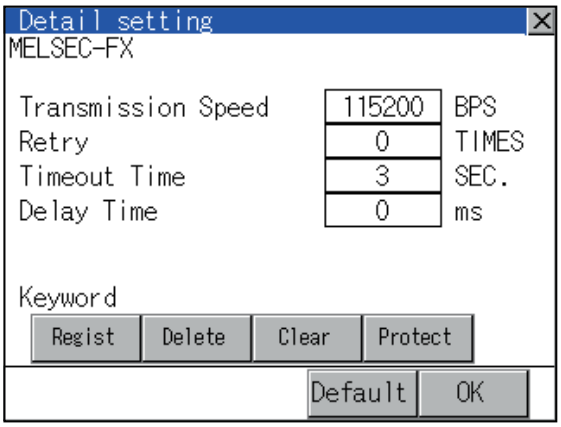

(1) Regist
Keyword is registered.

1. Touching the [Regist] key displays the Registration Selection screen.
For a FX PLC*1 that is not compatible with the customer keyword, the keyboard for the keyword input of 2. is displayed.
Select [Keyword] or [Keyword and Customer keyword].
When the [Enter] key is touched, the selection is completed and the keyboard for the keyword input is displayed.

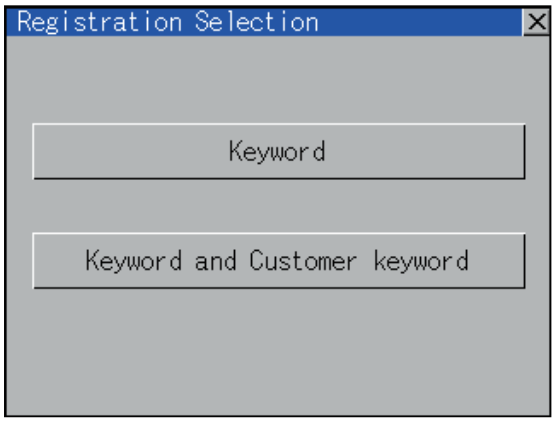

Selection	Description
When [Keyword] is selected	Only keyword can be registered.
When [Keyword and Customer keyword] is selected	The Customer Keyword can be registered after registration of the keyword.

*1 For details on FX PLC compatible with customer keyword, refer to the manual of the PLC used.

POINT

The customer keyword allows the user to clear the protection set by a keyword. However, the protection cannot be deleted.

2. When the registration is selected or the Regist key is touched on a PLC not compatible with the customer keyword, the keyboard for the keyword input is displayed in a pop-up window.
When the keyword is input and the [Enter] key is touched, registration is completed.
When [Keyword and Customer Keyword] is selected on the selection screen for the registration, the Customer Keyword entry screen of 3. is displayed.
For the keyword, 8 digits from 0 to 9 or A to F must be set.

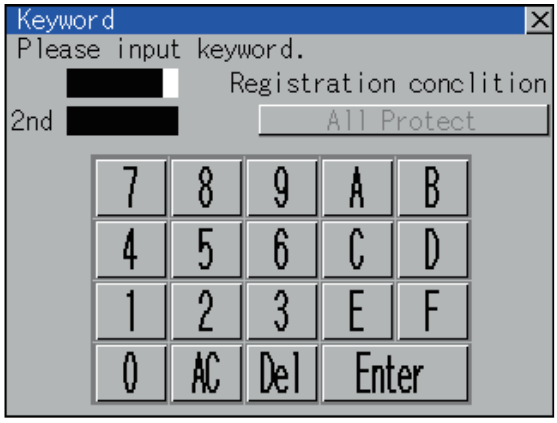

Target PLC	Setting	
	When keyword and 2nd keyword are registered	When only keyword is registered
FX PLC compatible with 2nd keyword*1	[Registration conclition]*2 can be selected.	[Registration conclition]*2 cannot be selected.
FX PLC not compatible with 2nd keyword*1	-	

*1 For details on FX PLC compatible with 2nd keyword, refer to the manual of the PLC used.
*2 [Registration conclition]
Options can be selected among [Read/Write Protect], [Write Protect], or [All Protect].
For access restrictions of each setting, refer to the manual of the PLC used.

3. When [Keyword and Customer Keyword] is selected on the selection screen for registration and the keyword input is completed, the Customer Keyword registration screen is the displayed.
When the customer keyword is input and the [Enter] key is touched, registration is completed.
To set the customer keyword, 8 digits from 0 to 9 or A to F must be used.

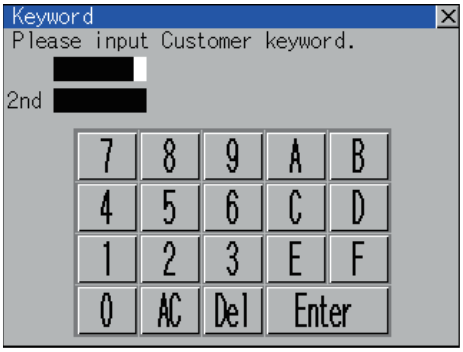

POINT

(1) Selection of keyword protection level

For the devices which can perform the online operation of FX PLC, 3 levels of protection can be set.
When the monitoring or setting change by online devices is needed, set the keyword taking the following into consideration.

(a) When only keyword is registered

Protection level is selected by the head character of keyword.

All operation prohibition:	Set the keyword starting with one of A, D to F, or 0 to 9.
Read/incorrect write protection:	Set the keyword starting with B.
Erroneous write prohibition:	Set the keyword starting with C.

(b) When keyword and 2nd keyword are registered

Protection level is selected by [Registration conclition].

(2) Applicability of monitoring for each keyword protection level

The applicability of monitoring for each protection level is as follows.

Item		When only keyword is registered			When keyword and 2nd keyword are registered			Keyword unregistered/ protection cancelled
		All operation prohibition	Read/ Incorrect write protection	Erroneous write prohibition	All Protect	Read/Write prohibition	Write Protect	
Device monitoring		○	○	○	×	○	○	○
Device change	T, C setting values and file register (from D1000)	×*1	×*1	×*1	×	○	○	○
	Other than the above	○	○	○	×	○	○	○

*1 When the T, C setting values are specified indirectly, changing devices is available.

(3) Difference between [All Protect] and [All operation prohibition]

When [All Protect] is selected, both device display and input by the programming tool or GOT are prohibited.
When [All operation prohibition] is selected, device display and input are possible although operations by the programming tool are all prohibited.

(2) Delete

Registered keyword is deleted.

1. Touching the [Delete] key pops up a keyboard for keyword input.
2. When the correct keyword is input and the [Enter] key is touched, the keyword is deleted.

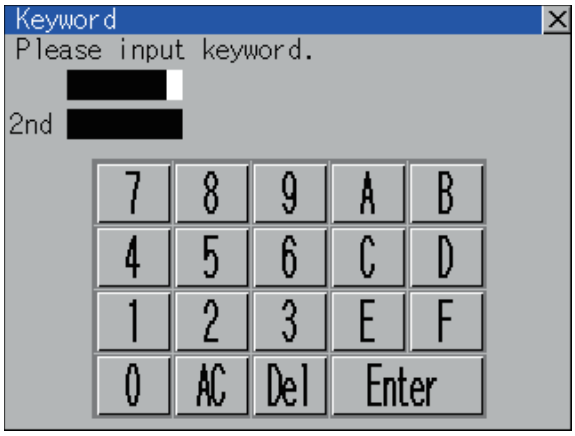

Target PLC	Setting
FX PLC compatible with 2nd keyword	Input a keyword to be deleted.
FX PLC not compatible with 2nd keyword	Input a keyword to be deleted only into "keyword". "2nd keyword" is ignored.

(3) Clear

To access an FX PLC where a keyword has been registered, keyword protection is cancelled.

1. Touching the [Clear] key pops up a keyboard for keyword input.
2. When the correct keyword is input and the [Enter] key is touched, the protection is cancelled.

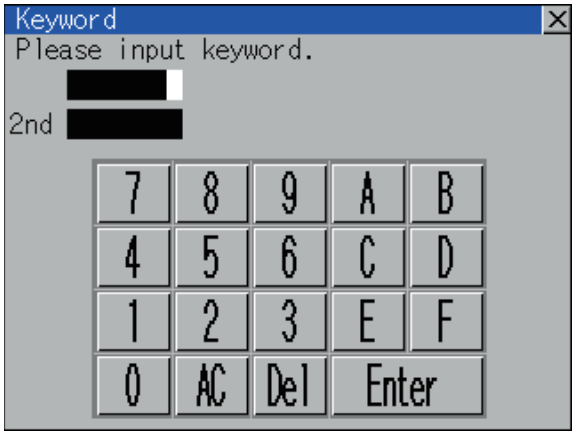

Target PLC	Setting
FX PLC compatible with 2nd keyword	Input a keyword or Customer Keyword to cancel the protection.
FX PLC not compatible with 2nd keyword	Input a keyword only into "keyword" to cancel the protection. "2nd keyword" is ignored.

(4) Protect

A keyword with cancelled protection is reactivated for protection.

1. Touching the[Protect] key activates keyword protection.

11.3 Ethernet Setting

11.3.1 Ethernet setting functions

The contents of the Ethernet setting in drawing software can be checked.
The setting of the host station can be changed.
For Ethernet setting, refer to the following.

☞ GOT1000 Series Connection Manual for GT Works3

11.3.2 Display operation of Ethernet setting

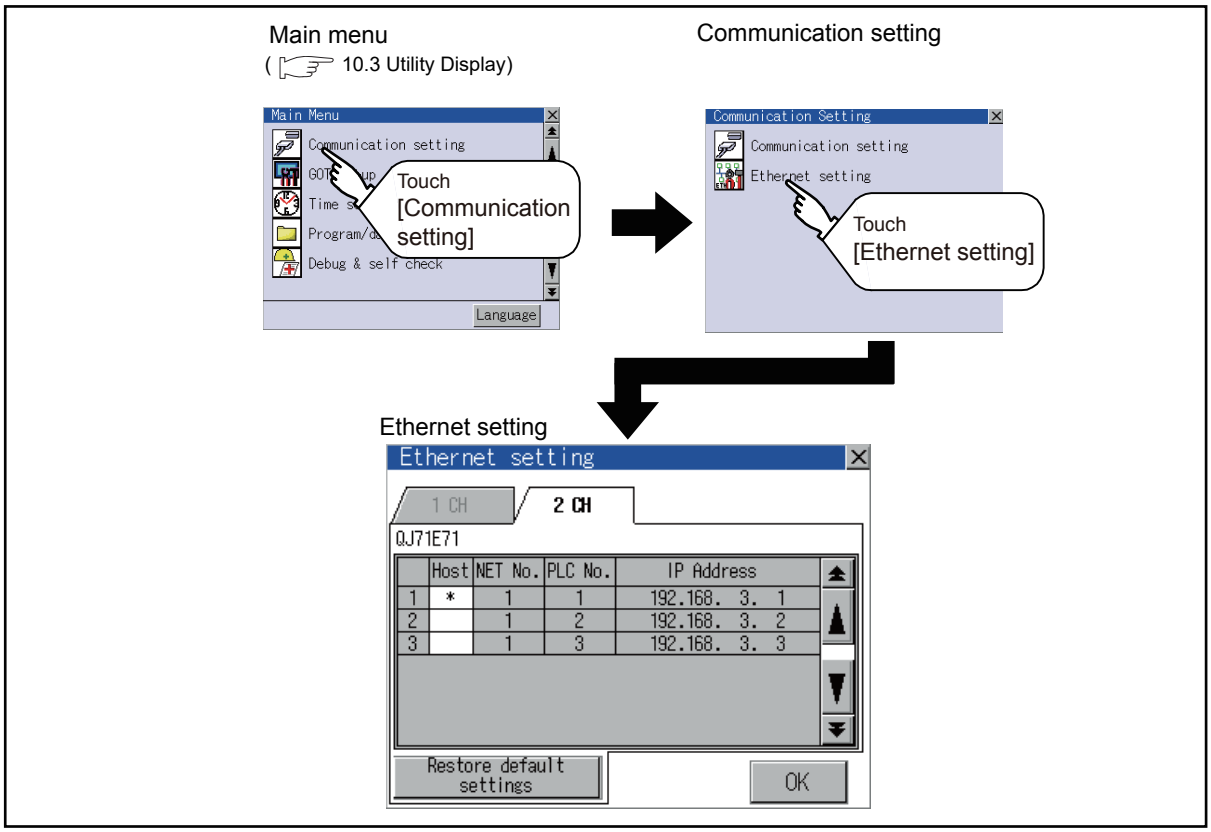

11.3.3 Display contents of Ethernet setting

The following describes the setting items and the display contents of the Ethernet setting.

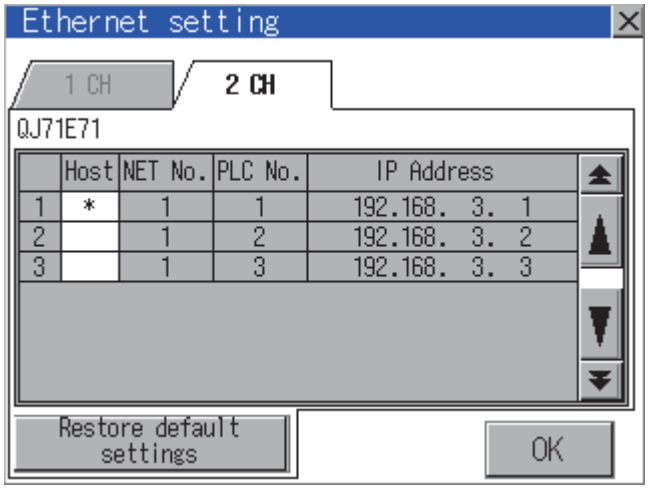

(1) Channel selection tab
Channels can be switched.
Switching to the channel which does not have the Ethernet setting is not available.
[*] is displayed on the tab of the channel whose setting is changed.

(2) Ethernet setting item
The contents of the Ethernet setting configured in drawing software are displayed.
The setting of the host station can be changed.

☞ ■Change of host

(3) Restore default settings
Touching this button cancels the change of the setting and returns the setting to the status when the project data was written.

POINT

(1) How to cancel the change of the setting in the [Ethernet setting] screen
Cancel the settings changed in the [Ethernet setting] screen with the [Restore default settings] button.
The changed settings remain until they are canceled with the [Restore default settings] button.
The changed settings are not canceled even if writing the project data or OS to the GOT.
When the project data is written to the GOT without canceling the changed settings, those changed settings are reflected to the Ethernet setting of the written project data.
(If the written project data does not have a channel with same Ethernet settings as that of the channel changed in [Ethernet setting] screen, the changed settings are not reflected.)

(2) Range where the settings changed in the [Ethernet setting] screen are reflected
The settings changed in the [Ethernet setting] screen are valid in the GOT. On the other hand, they are not overwritten to the project data written to the GOT.
The changed settings are not reflected to the project data which is read from the GOT after changing the settings.
If the GOT data is copied with the GOT data package acquisition, the change in the [Ethernet setting] screen is reflected to the copied data.

■ Change of host

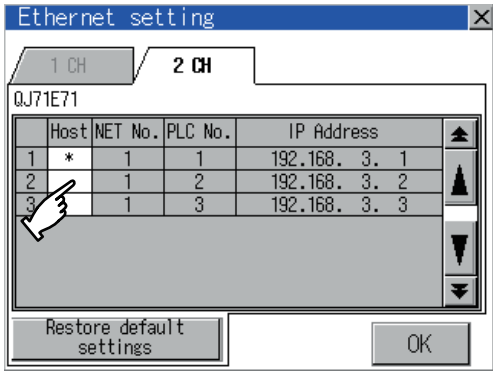

1. Touch the device to be set as the host.

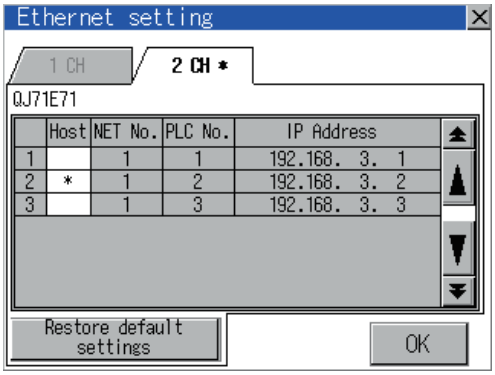

2. Touch the [OK] button.

3. Touching the [×] button restarts the GOT and the GOT operates with the changed settings.

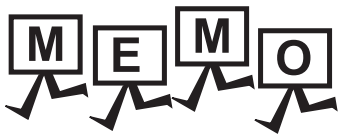
MEMO

12. DISPLAY AND OPERATION SETTINGS (GOT SET UP)

Setting screen for display and setting screen for operation can be displayed from the utility screen.
In the setting screen for display and the setting screen for operation, the following settings can be set.

Item	Description	Reference
Display	Language, opening screen time, screen save time, screen save backlight, battery alarm display and invert colors	12-1
	Adjusting brightness and contrast	12-6
Operation	Buzzer volume, window move buzzer volume, key sensitivity, key reaction speed, touch detection mode	12-7
	Security setting	12-10
	Utility call key	12-12
	Touch panel calibration	12-14
	USB mouse/keyboard setting	12-16
	VNC® server function setting	12-18
Transparent mode	Ch No.	12-19
Backup/restoration	Setting the storage locations for backup data and backup settings, and setting the maximum number of backup data	12-20
	Setting the CPU No. setting at backup to "YES" or "NO"	12-21
	Trigger backup settings	12-22
Behavior of duplicate IPs	Setting the GOT operation when a device with the same IP address as that of the GOT is added to the network afterwards.	12-23
License management	license registration/deregistration	12-26

12.1 Display Setting

12.1.1 Function of Display

Setting regarding display is possible.
The items which can be set are shown below. When each item part is touched, the respective setting becomes possible.

Item	Description	Setting range
Language*1	Confirmation of the current language and switching language can be performed regarding with the language displayed by utility and dialog box.	日本語 (Japanese) English (English) 中文(简体) (Chinese (Simplified)) 中文(繁體) (Chinese (Traditional)) 한국어 (Korean) Deutsch (German) (At factory shipment: User's selection)
Opening screen time	The title display period at the main unit boot can be set.	0 to 60 seconds*2 (At factory shipment: 5 seconds)
Screen save time	The period from the user stops the touch panel operation till the screen save function starts can be set.	0 to 60 minutes (At factory shipment: 5 seconds)
Screen save backlight	Whether turning ON or OFF the backlight simultaneously at the start of the screen save function can be specified.	ON/OFF (At factory shipment: OFF)
Battery alarm display	Whether to display system alarm when the voltage of the GOT internal battery has dropped can be specified.	ON/OFF (At factory shipment: OFF)
Brightness, contrast	The brightness can be adjusted. ☞ ■Brightness, contrast	-
Invert colors (only GT1450-Q)	For the user-created screen and the utility screen, whether to invert the displayed colors can be specified.	ON/OFF (At factory shipment: OFF)

*1 Only selectable languages are displayed.

The selectable languages differ depending on the fonts installed in the GOT.
For details of the fonts, refer to the following manual.

☞ GT Designer3 Version1 Screen Design Manual (Fundamentals)

*2 Setting 0 does not hide the title screen.
The title screen is always displayed for 4 seconds or longer (which changes depending on the project data contents).

POINT

(1) Display setting by GT Designer3
Select [Common Settings] → [GOT Environment Settings] → [GOT Setup] from GT Designer3 to make the settings of opening screen time, screen save time and screen save backlight.
To change a part of the setting after downloading the project data, change the setting at the display setting of GOT.

☞ GT Designer3 Version1 Screen Design Manual (Fundamentals)

(2) Screen save time
Using the system information function can compulsorily switch the controller to the screen saving status (Forced Screen Saver Disable Signal) or disable the screen save time (Automatic Screen Saver Disable Signal) set with Utility.

☞ GT Designer3 Version1 Screen Design Manual (Fundamentals)

(3) Screen save backlight
When [Screen save backlight] is set to [ON], using the system information function (Backlight OFF output signal) can switch the backlight OFF from the controller.
When [Screen save backlight] is set to [OFF], the above signal has no effect on the screen save backlight.

☞ GT Designer3 Version1 Screen Design Manual (Fundamentals)

12.1.2 Display operation of Display

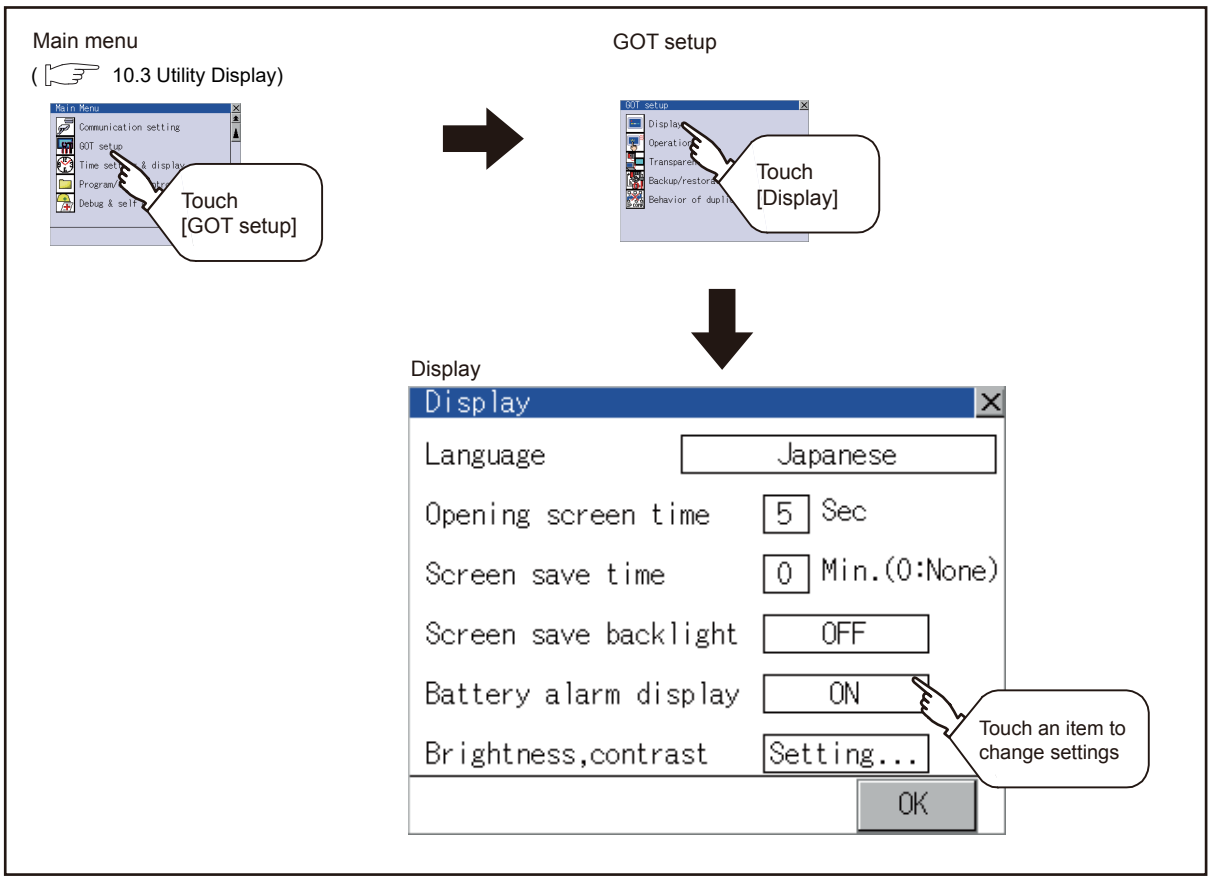

12.1.3 Display operations

■ Language

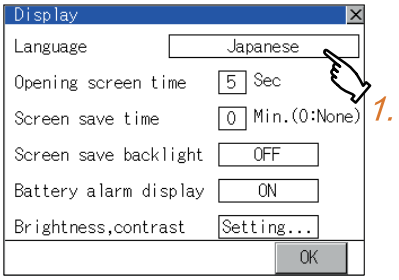

1. Touching the setting items displays the Select Language screen.

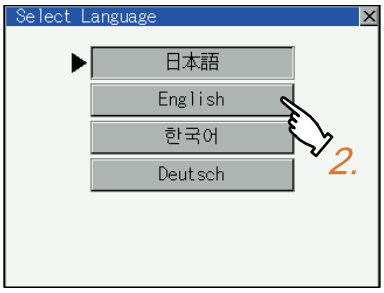

2. Touching the button of a desired language selects the language and returns the screen to the Display screen.

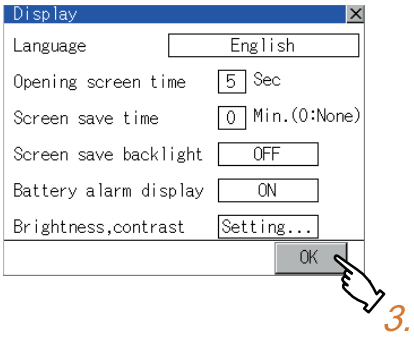

3. Touching [OK] button defines the setting contents.

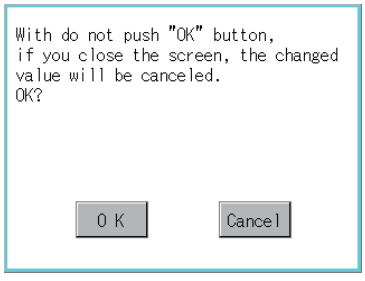

Touching [×] button without touching [OK] button displays the dialogue box shown on the left.
[OK] button: The changed value is canceled, and the screen is closed.
[Cancel] button:The display setting screen is displayed.

4. Closing the display setting and GOT setup screens after completing the setting of all items to change with [×] button restarts the GOT and reflects the setting contents.

HINT

(1) Selectable languages
The system message switch button is displayed only for the selectable languages.
The selectable languages differ depending on the fonts installed in the GOT.
For the relation between the selectable languages and the fonts, refer to the following.

☞ GT Designer3 Version1 Screen Design Manual (Fundamental) 2.5 Specifications of Applicable Characters

(2) System language switching using the device
The system language can be switched using the system language switching device set with GT Designer3.
For the setting method of the system language switching device, refer to the following.

☞ GT Designer3 Version1 Screen Design Manual (Fundamentals)
4.3 Language Switching Device Setting (GOT Environmental Setting: Language Switching)

■ Opening screen, screen save time

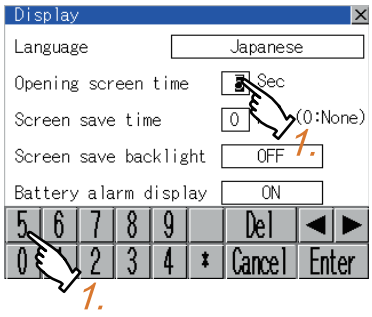

1. Touching the setting time (numerical) displays the keyboard.
Input numeric with the keyboard.

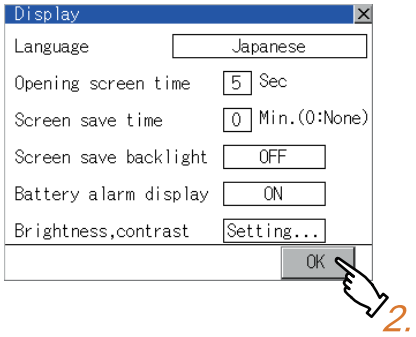

2. Touching [OK] button defines the setting contents.

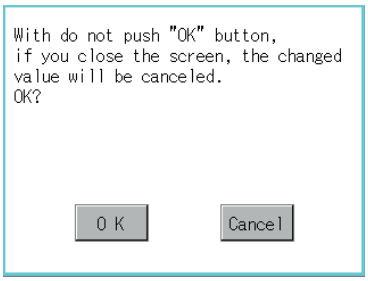

Touching [×] button without touching [OK] button displays the dialogue box shown on the left.
[OK] button: The changed value is canceled, and the screen is closed.
[Cancel] button:The display setting screen is displayed.

3. Closing the display setting and GOT setup screens after completing the setting of all items to change with [×] button restarts the GOT and reflects the setting contents.

■ Screen save backlight, battery alarm display, invert colors

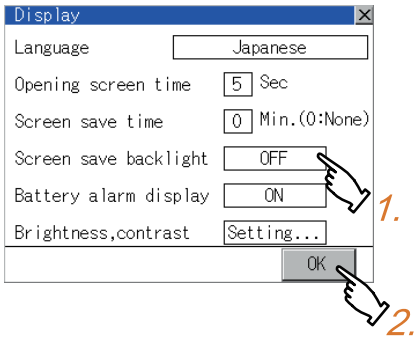

1. Touching the setting item changes the setting items. (ON ⇄ OFF)

2. Touching [OK] button defines the setting contents.

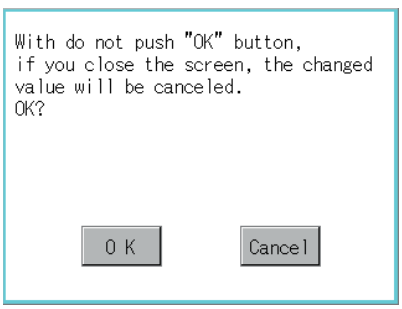

Touching [×] button without touching [OK] button displays the dialogue box shown on the left.
[OK] button: The changed value is canceled, and the screen is closed.
[Cancel] button:The display setting screen is displayed.

3. Closing the display setting and GOT setup screens after completing the setting of all items to change with [×] button restarts the GOT and reflects the setting contents.

■ Brightness, contrast

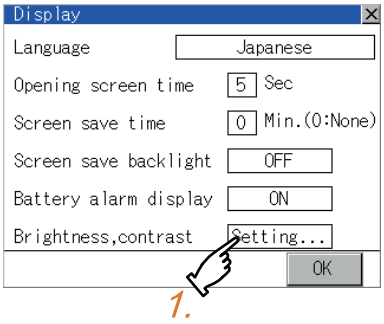

1. Touching the setting items displays the brightness contrast adjustment screen.

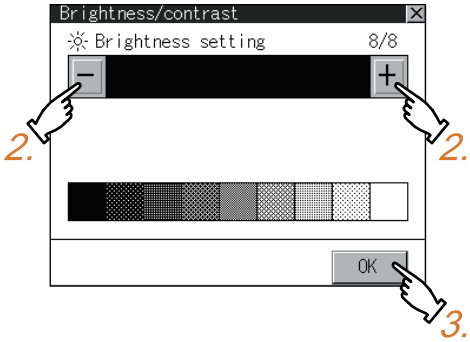

2. Brightness can be adjusted by touching [+], [-] key of brightness adjustment.

3. Touching [OK] button defines the setting contents.

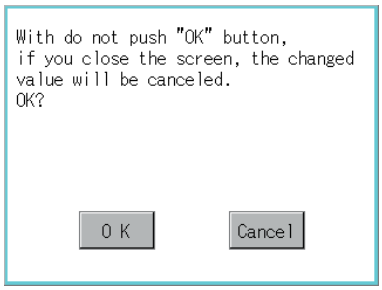

Touching [×] button without touching [OK] button displays the dialogue box shown on the left.
[OK] button: The changed value is canceled, and the screen is closed.
[Cancel] button: The brightness/contrast adjustment screen is displayed.

12.2 Operation Setting (Settings Regarding Operation)

12.2.1 Operation setting functions

Setting regarding GOT operation can be set.
The items which can be set are described below. Touching the each item part makes the respective setting become possible.

Function	Description	Setting range
Buzzer volume setting	Buzzer volume setting can be changed.	OFF/SHORT/LONG (At factory shipment: SHORT)
Window move buzzer volume setting	Whether turn ON/OFF buzzer when move window can be selected.	ON/OFF (At factory shipment: ON)
Security setting screen change	Security level change screen can be displayed. ☞ 12.2.4 Security level change	-
Utility call key screen change	Utility call key setting screen can be displayed. ☞ 12.2.5 Utility Call Key Setting	-
Key sensitivity setting	The sensitivity of touch panel when GOT screen is touched can be set. E.g. a setting can be changed when double-touch is made when touching the GOT screen only once. (For preventing chattering)	1 to 8*1
Touch panel calibration	Touch panel reading error can be corrected. ☞ 12.2.6 Adjusting the touch panel position (Touch panel calibration)	-
USB mouse/keyboard setting	Set the setting items related with USB mouse/keyboard. ☞ 12.2.7 USB mouse/keyboard setting	-
VNC® server function setting	The authorization guarantee time for the VNC® server function can be set.	0 to 3600 seconds <At factory shipment: 0 seconds>

*1 Relation between the [Key sensitivity] setting and [Key reaction speed]
The larger the set value in [Key sensitivity] is, the shorter the time taken from touching the touch panel until the GOT responds becomes.
E.g. decrease the value set for [Key sensitivity] when double-touch is made when touching the GOT screen only once. (Decrease the reaction speed.)
The relation between the [Key sensitivity] setting and [Key reaction speed] is as follows.

[Key sensitivity] setting	Quick response ←							→ Slow response
	8	7	6	5	4	3	2	1
[Key reaction speed]	-20ms	-10ms	±0ms (Standard)	+10ms	+20ms	+40ms	+80ms	+120ms

POINT

Operation setting by GT Designer3
Select [Common Settings] → [GOT Environment Settings] → [GOT Setup] from GT Designer3 to make the settings of buzzer sound and buzzer sound at window move.
To change a part of the setting after downloading the project data, change the setting at the display setting of GOT.

☞ GT Designer3 Version1 Screen Design Manual (Fundamentals)

12.2.2 Display operation of Operation

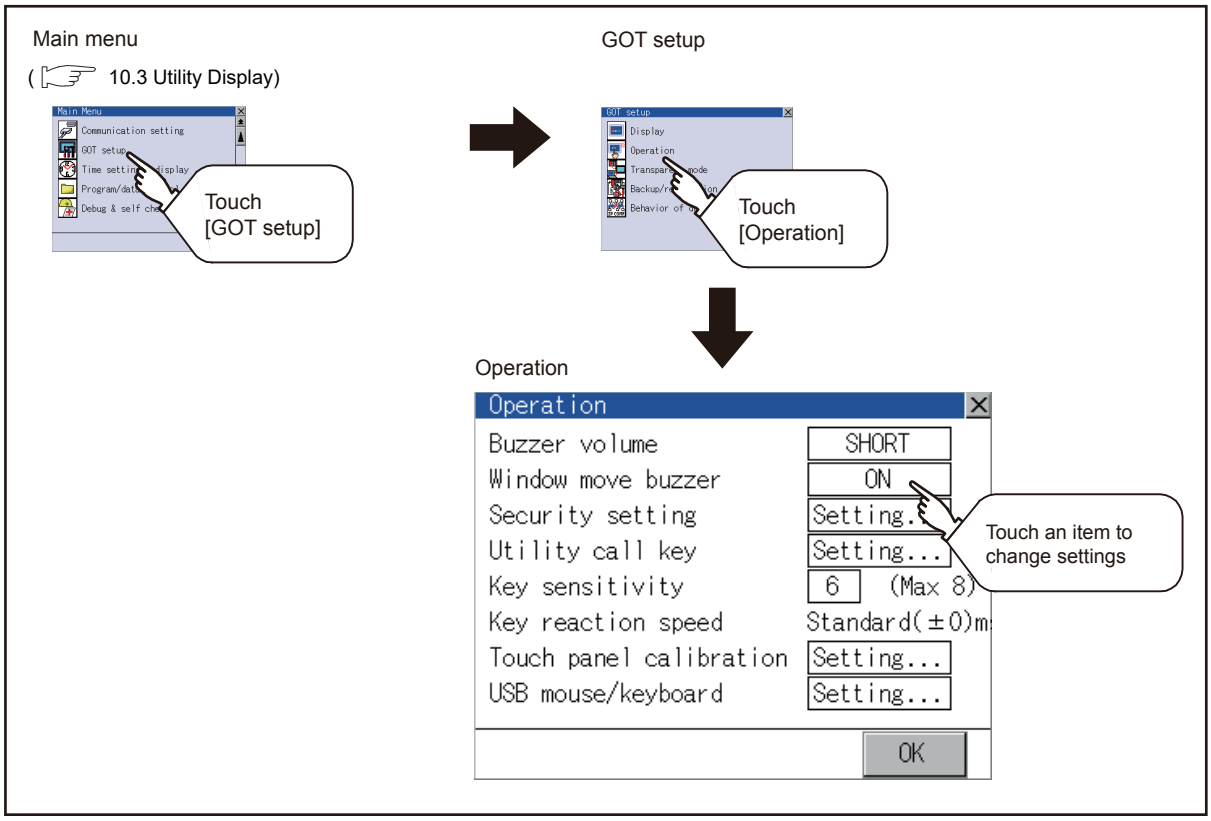

12.2.3 Setting operation of operation

■ Buzzer volume, window move buzzer volume

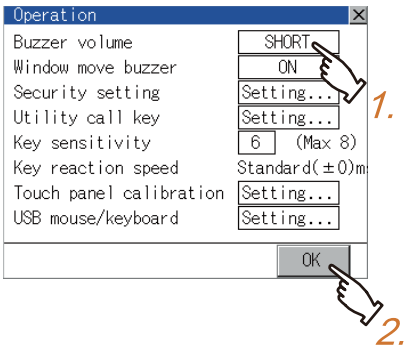

1. Touching the setting item changes the setting items.
2. Touching [OK] button defines the setting contents. Touching [×] button restarts the GOT and reflects the setting contents.

■ Security setting

For the security setting operation, refer to the following.

☞ 12.2.4 Security level change

■ Utility call key

For the utility call key operation, refer to the following.

☞ 12.2.5 Utility Call Key Setting

■ Key sensitivity setting

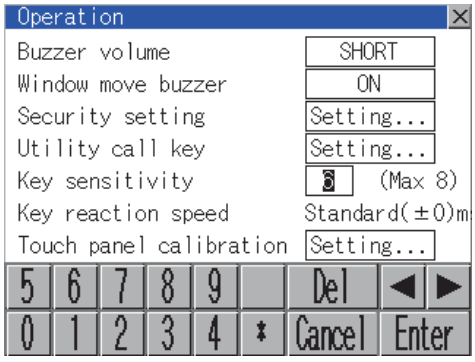

1. Touching the setting items displays the keyboard. Enter the numerical value from the keyboard.
2. The key response speed*1 corresponding to the [Key sensitivity] setting is displayed.
3. Touching [OK] button defines the setting contents. Touching [×] button restarts the GOT and reflects the setting contents.

*1 Relation between the [Key sensitivity] setting and [Key reaction speed]
The larger the set value in [Key sensitivity] is, the shorter the time taken from touching the touch panel until the GOT responds becomes. E.g. decrease the value set for [Key sensitivity] when double-touch is made when touching the GOT screen only once. (Decrease the reaction speed.)
The relation between the [Key sensitivity] setting and [Key reaction speed] is as follows.

[Key sensitivity] setting	Quick response ←							→ Slow response
	8	7	6	5	4	3	2	1
[Key reaction speed]	-20ms	-10ms	±0ms (Standard)	+10ms	+20ms	+40ms	+80ms	+120ms

■ Touch panel calibration

For touch panel calibration operation, refer to the following.

☞ 12.2.6 Adjusting the touch panel position (Touch panel calibration)

■ USB mouse/keyboard setting

For the USB mouse/keyboard setting, refer to the following.

☞ 12.2.7 USB mouse/keyboard setting

■ VNC® server function setting

Refer to the following for the VNC® server function setting operation

☞ 12.2.8 VNC(R) server function setting

12.2.4 Security level change

■ Security level change functions

Changes the security level to the same security level set by each object or screen switch.
To change the security level, input the password of the security level which is set in GT Designer3.

Security level setting, Password setting..... GT Designer3 Version1 Screen Design Manual (Fundamentals)

POINT

Restrictions on screen display

The security level change screen cannot be displayed when project data do not exist in GOT.
Change the security level after downloading the project data to GOT.

■ Display operation of Security level change

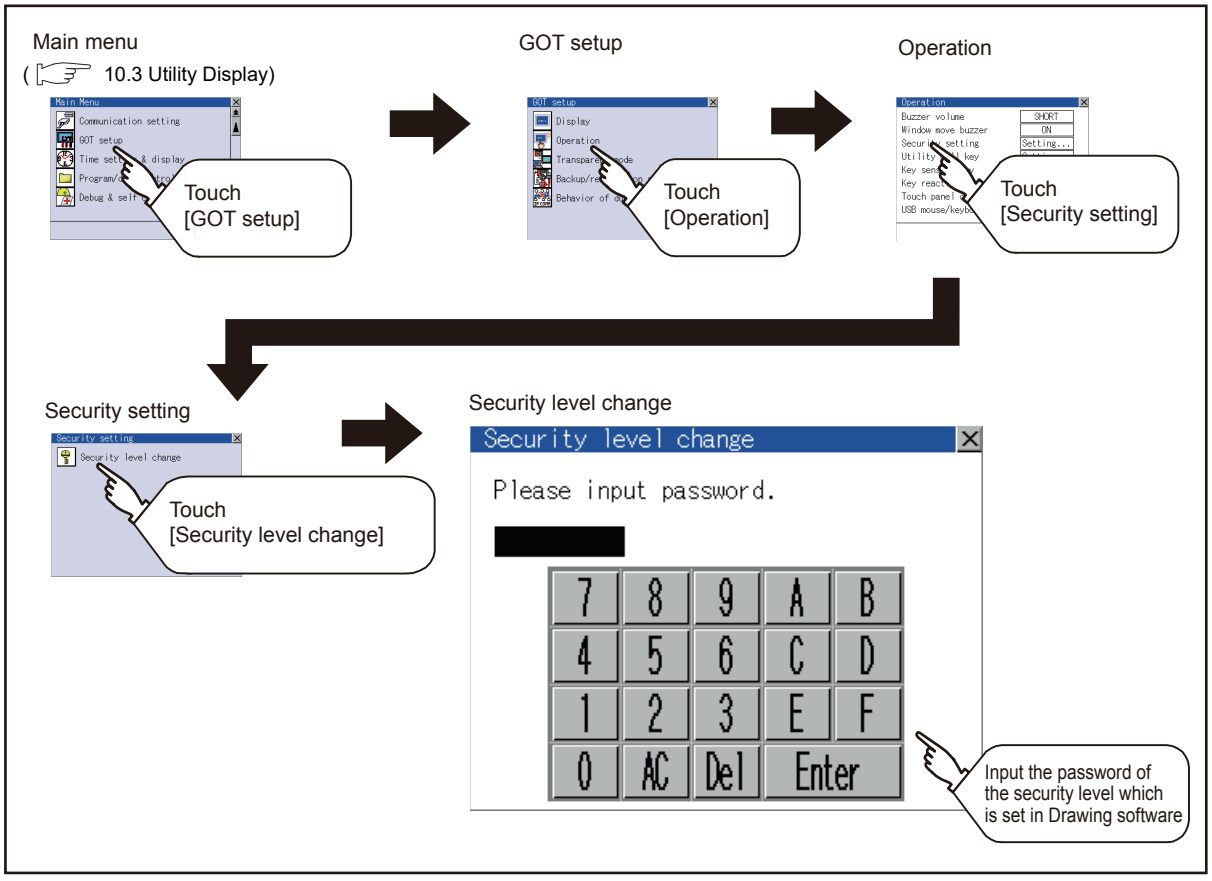

■ Security level change operation

(1) Password input operation

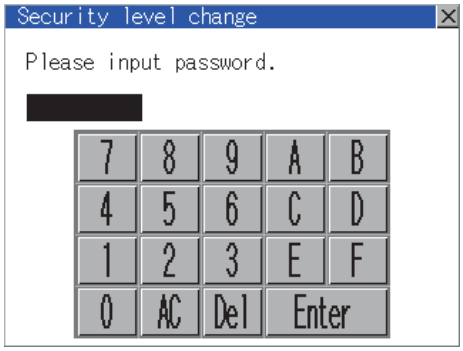

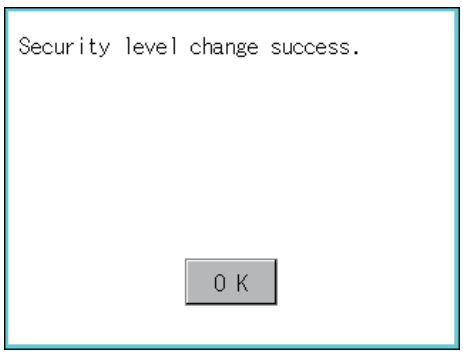

1. By touching [0] to [9] , [A] to [F] key, the password of the changed security level is input.
2. When correcting the input character, touch [Del] key to delete the correcting character and input the password again.
3. After inputting password, touch the [Enter] key. When the password matches, a message notifying successful change of the security level is displayed. When the password does not match, an error message is displayed.
4. Touching [OK] button returns the screen to the password input screen again.
5. Touching [×] button returns the screen to the security setting screen.

POINT

About forgetting to return to the original level after changing security level temporarily

When use GOT after temporarily changing the security level, do not forget to return the security level to the original level.

12.2.5 Utility Call Key Setting

■ Utility call key setting function

The key position for calling the main menu of the utility can be specified.
For the key position, 0 or 1 point can be specified from 4 corners on the screen.
By keeping pressing the screen, a setting to switch the screen to the utility is available.
This prevents a switching to the utility by an unintentional operation.

POINT

Operation setting by GT Designer3

Select [Common Settings] → [GOT Environment Settings] → [GOT Setup] from GT Designer3 to make the settings of the utility call key.
To change a part of the setting after downloading the project data, change the setting at the display setting of GOT.

☞ GT Designer3 Version1 Screen Design Manual (Fundamentals)

■ Display operation of Utility call key

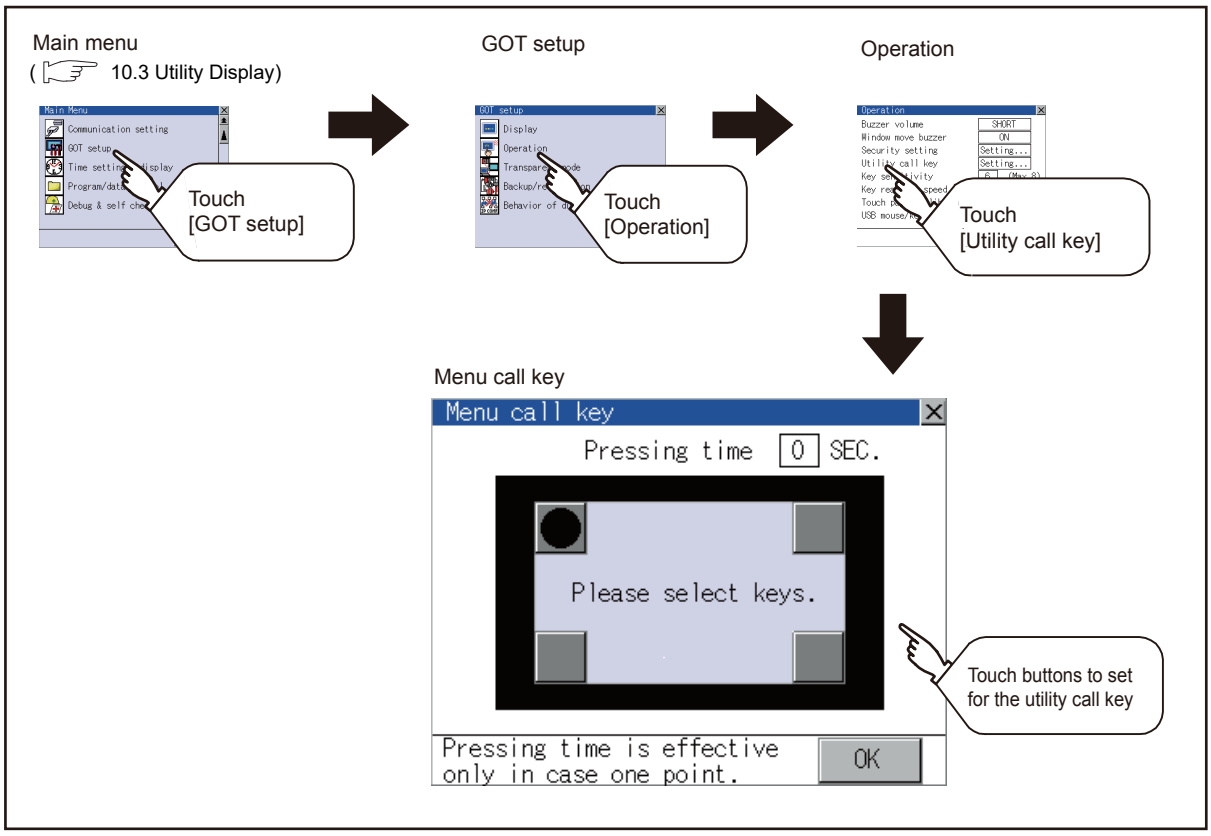

■ Setting operation of utility call key

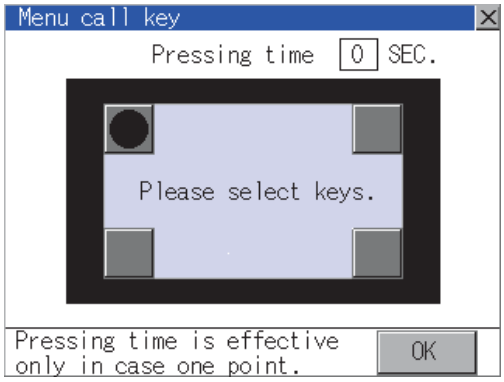

1. Touch ● or □ displayed at the 4 corners of the setting screen. The button repeats ● ⇄ □ with every touch. Set the corner to be set to a key position to ●.

   For the key position, 0 or 1 point only can be set.

2. When setting 1 point, specify the time to switch to the utility in case of keeping pressing the key position.
   Touch the time input area.

3. Touching the input area displays a keyboard.
   Input numerical value from the keyboard.

4. Touching [OK] button defines the setting contents.
   Touching [×] button returns the screen to the [Operation] screen.

POINT

(1) When the utility call key is set to the zero point
Even when the utility call key is set to the zero point, you can display the main menu using either of the following two operations:
- Pressing the special function switch set on the user-created screen
- Keeping pressing the upper left corner while the [Booting.] message is displayed after powering up.

☞ 10.3.1 Display operation of main menu

(2) Precautions on using the advanced alarm popup display
When [Display Position Switching] is set to [Switch] in the advanced alarm popup display setting, set either of the following for the utility call key.
- Setting the position of the utility call key to the upper-right or lower-left corner
- Setting [Pressing Time] of the utility call key to 1 or more seconds

When [Pressing Time] is set to 0 and the key position is set to the lower-left corner, the operation is as described below. If the positions of the key and the advanced alarm popup display overlap, the utility screen appears by switching the display position of the advanced alarm popup display.
For the advanced alarm popup display, refer to the following.

☞ GT Designer3 Version1 Screen Design Manual (Functions)

(3) When limiting the display and operation of the utility
When limiting the display and operating users, set a password to the GOT using the GT Designer3. If a user tries to display the main menu of the utility, the password input screen is displayed.
For details on setting passwords, refer to the following.

☞ GT Designer3 Version1 Screen Design Manual (Fundamentals)

12.2.6 Adjusting the touch panel position (Touch panel calibration)

■ Touch panel calibration setting function

Touch panel reading error can be corrected.
Normally the adjustment is not required, however, the difference between a touched position and the object position may occur as the period of use elapses.
When any difference between a touched position and the object position occurs, correct the position with this function.

Before adjustment

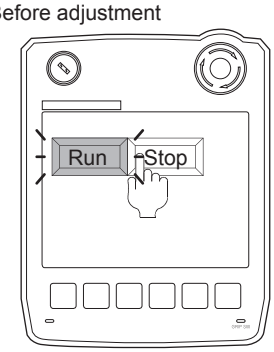

The [Run] will operate though you intended to touch the [Stop] button.

After adjustment

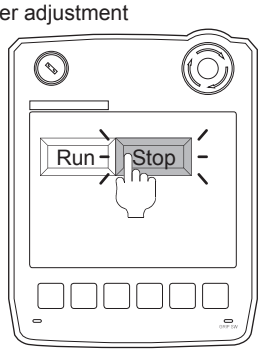

The [Stop] button can be touched without fail.

■ Display operation of Touch panel calibration

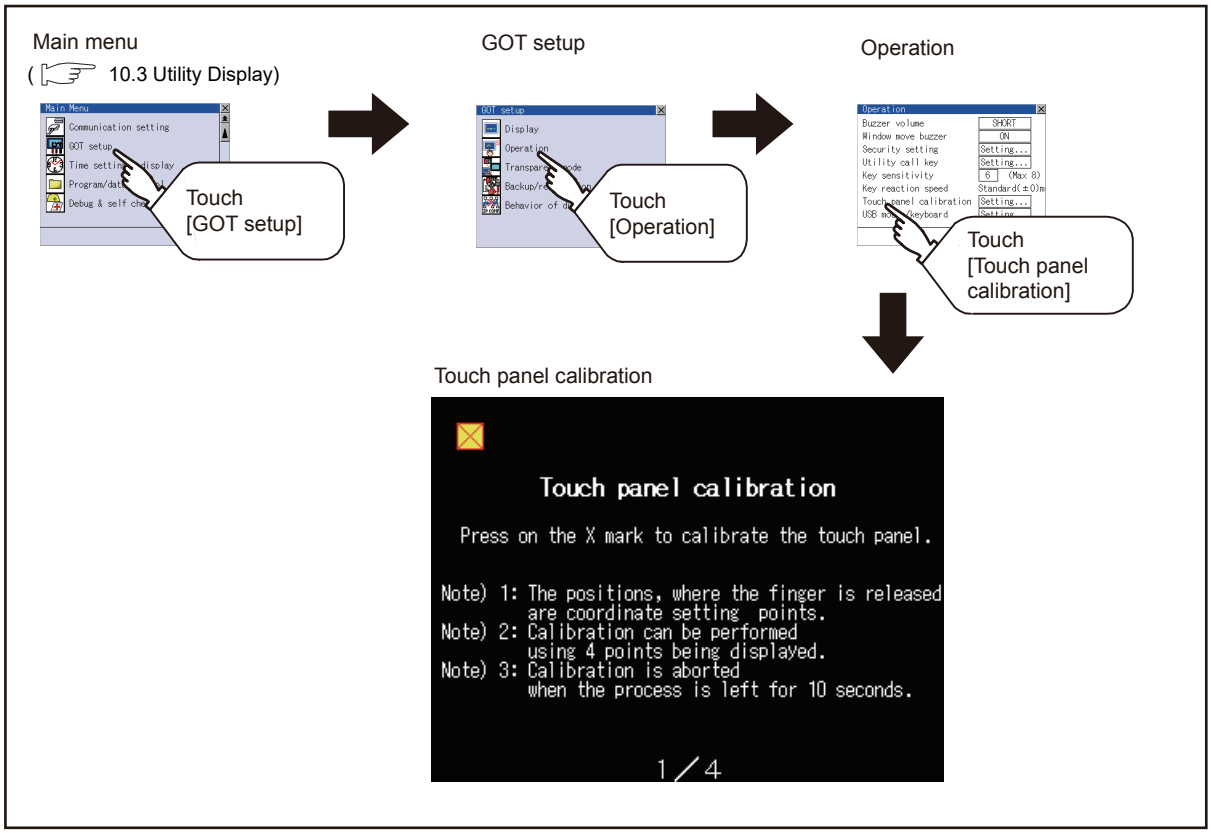

■ Touch panel calibration operation

Touch the ☒ point displayed on the screen with the finger one by one to make the setting.

1. Touch the center of the ☒ displayed on the upper left precisely.

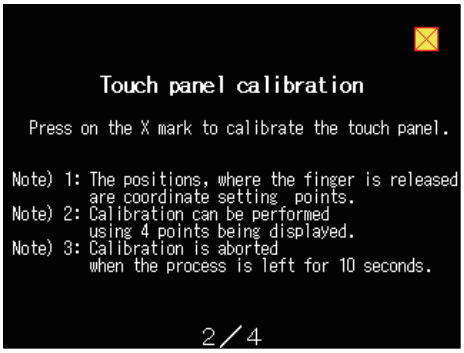

2. Touch the ☒ point displayed on the upper right.

3. Touch the ☒ point displayed on the lower left.

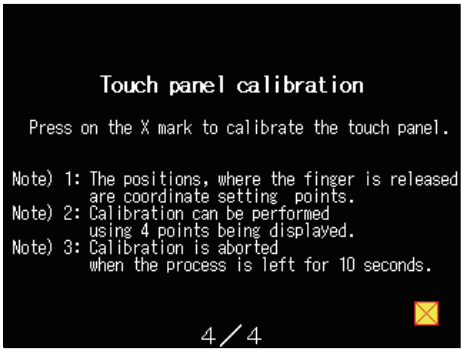

4. Touch the ☒ point displayed on the lower right.

5. Touching the ☒ button displayed on the upper right returns the screen to the previous screen. When the precise touch could not be made, touch the [Readjustment] button to make the setting from *1.* again.

12.2.7 USB mouse/keyboard setting

■ Function of USB mouse/keyboard

To install and use the USB mouse/keyboard on the GOT, set the USB mouse/keyboard.

■ Display operation of USB mouse/keyboard

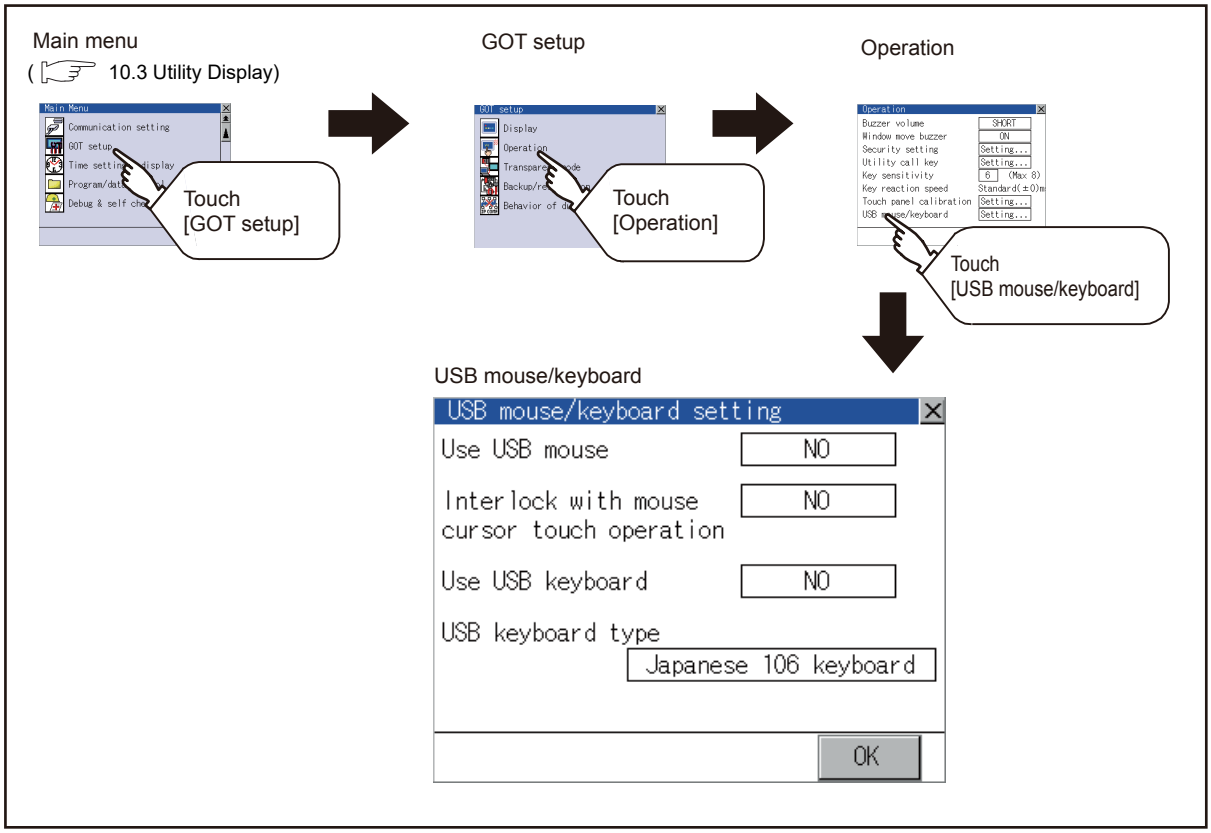

■ USB mouse/keyboard setting operation

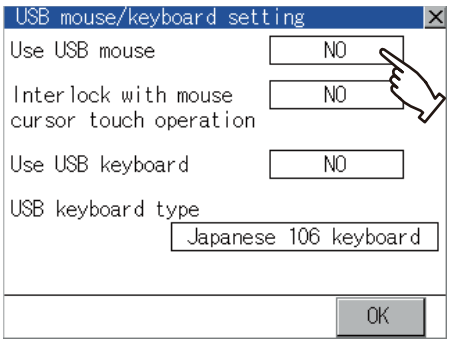

1. To use the USB mouse, touch the setting item of [Use USB mouse].
   The setting content is changed by touching.
   (YES ⇄ NO)

(Continued to next page)

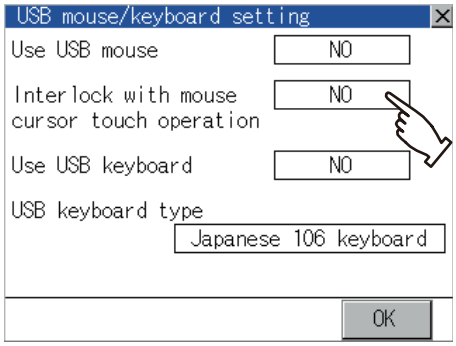

2. To move the mouse cursor to the touched position, touch the setting item of [Interlock with mouse cursor touch operation].
The setting content is changed by touching.
(YES ⇄ NO)

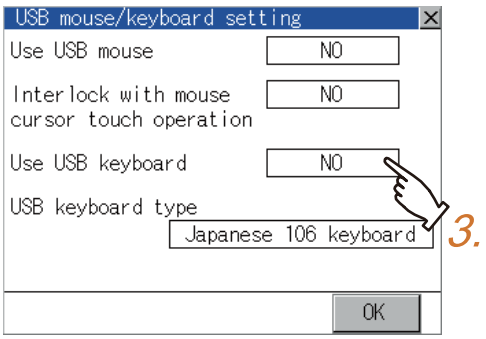

3. To use the USB keyboard, touch the setting item of [Use USB keyboard].
The setting content is changed by touching.
(YES ⇄ NO)

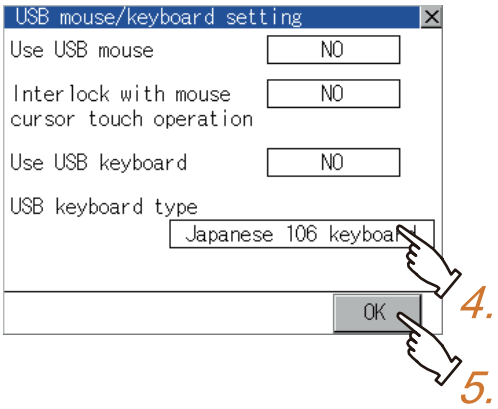

4. To use the USB keyboard, touch the setting item of [USB keyboard type].
The setting content is changed by touching.
(Japanese 106 keyboard ⇄ English 101 keyboard)

5. Touching [OK] button defines the setting contents.
Touching [×] button returns the screen to the [Operation] screen.

12.2.8 VNC(R) server function setting

■ VNC® server function setting

In the VNC® server function setting, the authorization guarantee time for the VNC® server function can be set.
For the details of the VNC® server function, refer to the following.

GT Designer3 Version1 Screen Design Manual (Functions)

Function	Description	Setting range
Operating priority guaranteed time	The time that the authorized equipment holds the authorization after you operate the authorized equipment can be set. (The unauthorized equipment cannot obtain the authorization until the set time elapses.)	0 to 3600 seconds (At factory shipment: 0 seconds)

POINT

Authorization guarantee time cancel signal (GS1792.b8)
When the Authorization guarantee time cancel signal (GS1792.b8) turns on, the authorization guarantee time setting is disabled.

■ Displaying the VNC® server function setting

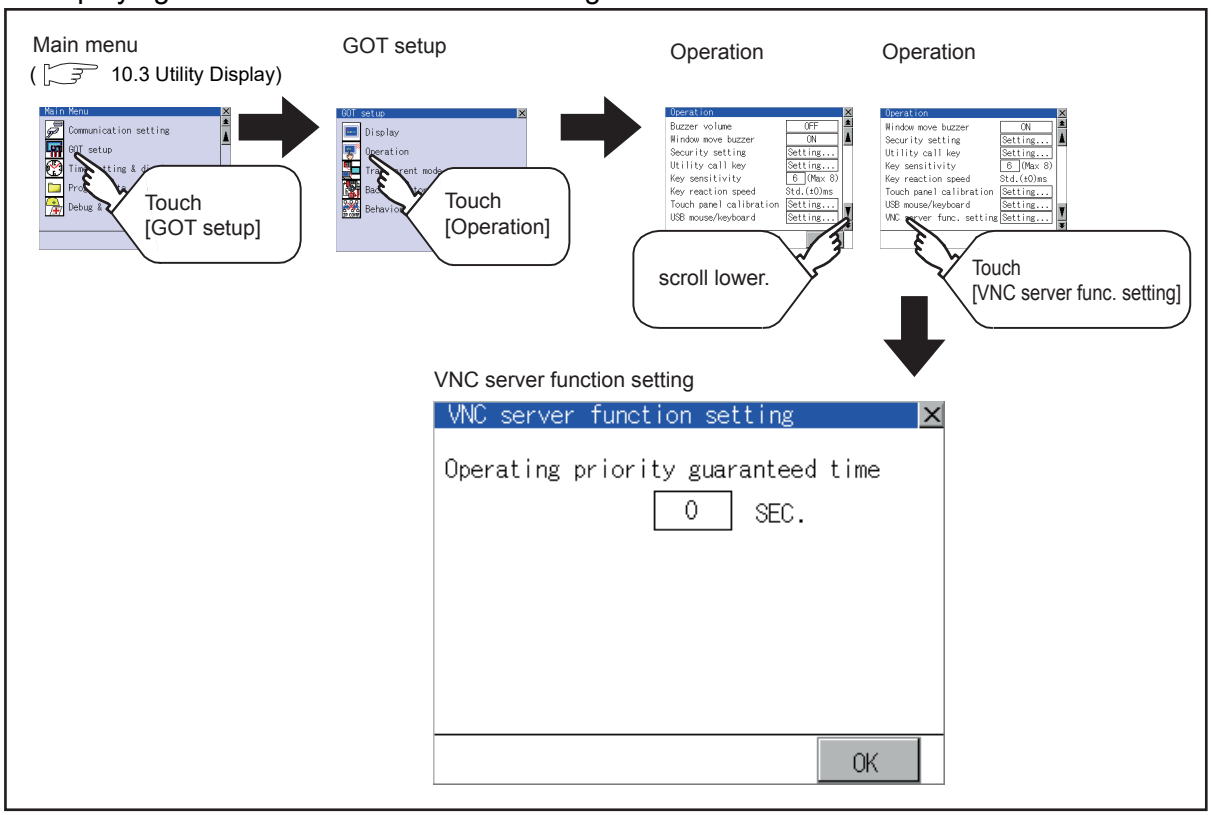

■ VNC® server function setting operation

(1) Operating priority guaranteed time

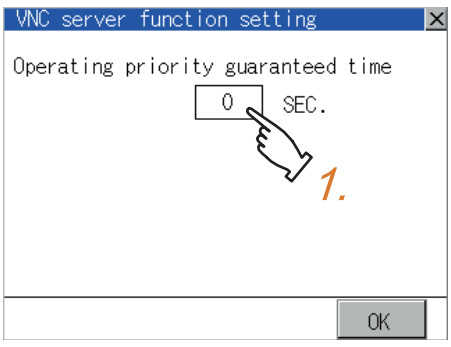

1. Touch the input field for [Operating priority guaranteed time] to display a keyboard.
   Input the authorization guarantee time with the keyboard.
2. Touching [OK] button defines the setting contents.
   Touching [×] button returns the screen to the operation setting screen.

12.3 Transparent Mode Setting

■ Function of the transparent mode

When using the multi-channel function, the channel No. of a controller to which the FA transparent function is executed can be specified. For the multi-channel function and FA transparent function, refer to the following manual.

☞ GOT1000 Series Connection Manual (Mitsubishi Products) for GT Works3

Function	Description	Setting range
Ch No.	The channel No. of a controller to which the FA transparent function is executed can be set.	1/2 (Default: 1)

■ Display operation of Transparent mode

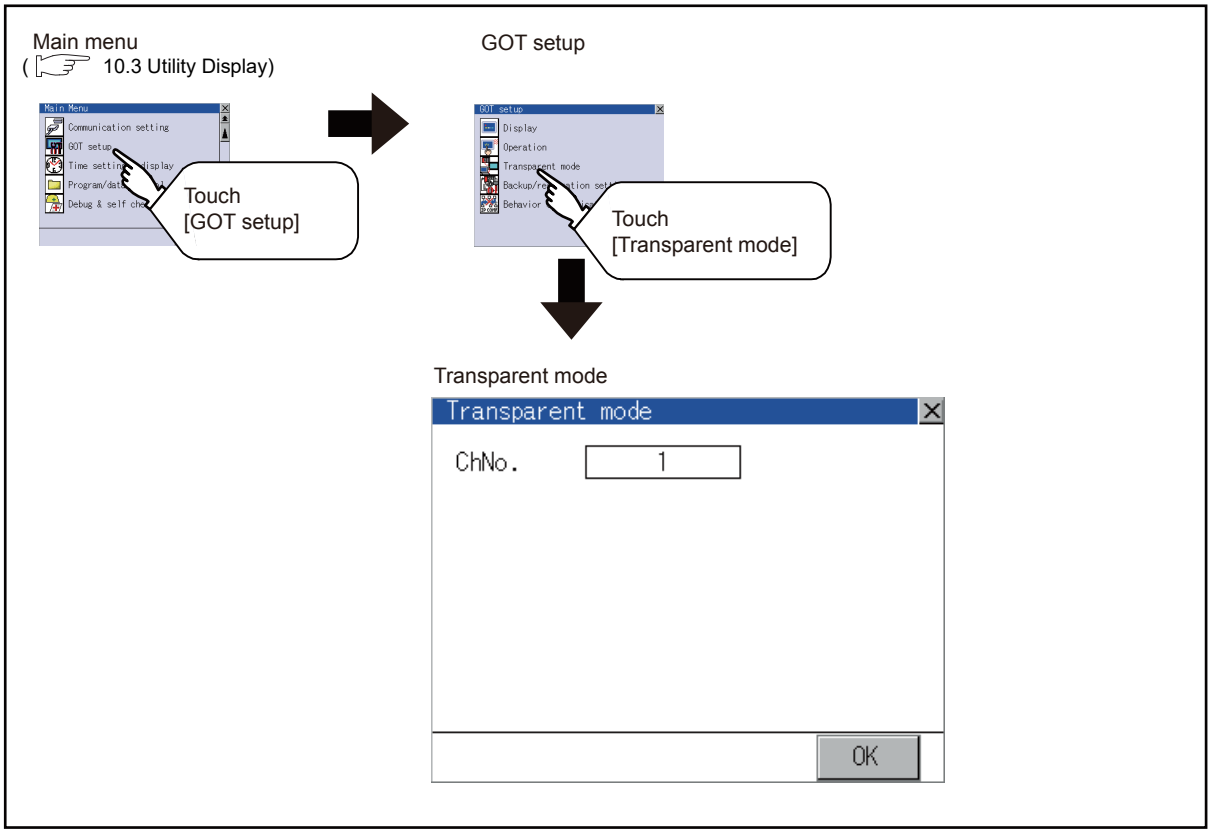

■ Setting operation of transparent mode

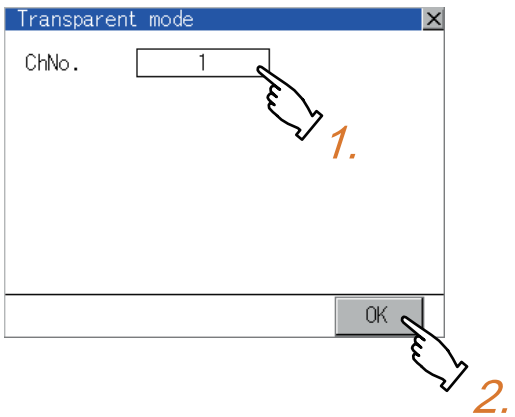

1. Touching the transparent Ch No. (numerical part) on the left displays the screen to select the communication driver.
   Select the channel to execute the FA transparent function.
2. Touching [OK] button defines the setting contents.
   Touching [×] button returns the screen to the [GOT Setup] screen.

12.4 Backup/Restoration Setting

The storage location for backup data can be set.
For how to use the backup/restoration, refer to the following manual.

☞ GOT1000 Series Extended/Option Functions Manual for GT Works3

Set the following items with touching the items on the GOT.

Item	Description	Setting range
Drive for backup setting	The drive for storing backup settings, including parameters and passwords for controllers, can be selected.	A: Built-in SD Card E: USB memory (Default: A: Built-in SD Card)
Drive for backup data	The drive for storing backup data can be selected.	A: Built-in SD Card E: USB memory (Default: A: Built-in SD Card)
Trigger backup setting	The GOT automatically backs up data when triggers (Rise, Time) specified for each backup setting are met.	None/Rise/Time (Default: None)
Max. of backup data	Set the maximum number of backup data to be stored. (When 0 is specified, the GOT does not check the number of backup data to be stored.)	Setting range: 0 to 50 (Default: 10)
Enable CPU No. setting	Set the CPU No. setting at backup to "YES" or "NO".	YES/NO (Default: NO)

■ Display operation of Backup/restoration setting

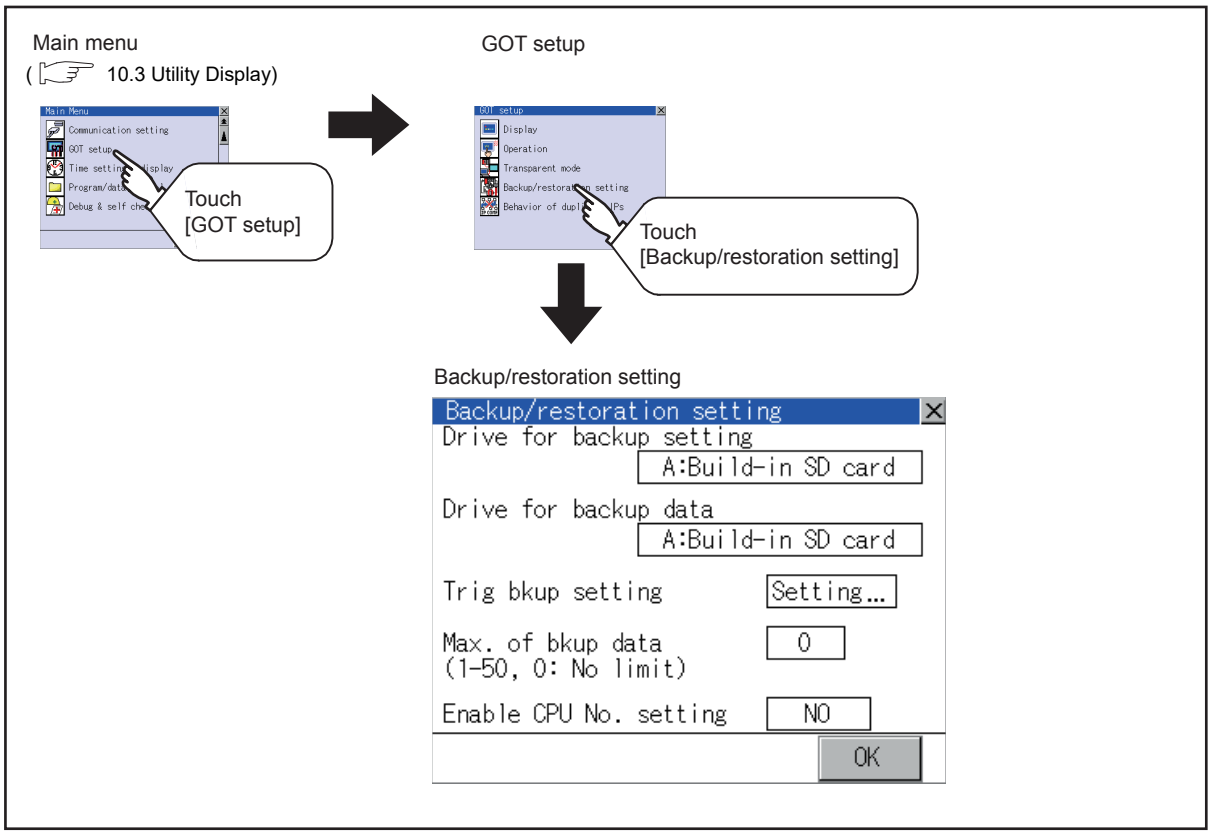

■ Setting operation of backup/restoration setting

(1) Drive for backup setting, drive for backup data

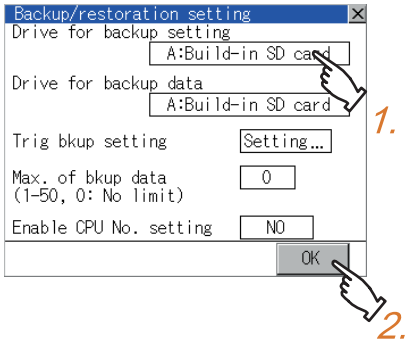

1. Touching the setting item changes the setting items.

2. Touching [OK] button defines the setting contents.
Touching [×] button returns the screen to the [GOT Setup] screen.

(2) Trigger backup settings

For operations of the trigger backup setting, refer to the following.

☞ ■ Trigger backup settings

(3) Max. of backup data

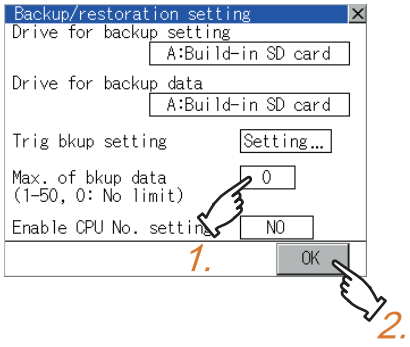

1. Touching the setting items displays the keyboard.
Input numerical value from the keyboard.

Setting range: 0 to 50, Default: 10
(When 0 is specified, the GOT does not check the number of backup data to be stored.)

2. Touching [OK] button defines the setting contents.
Touching [×] button returns the screen to the [GOT Setup] screen.

(4) Enable CPU No. setting

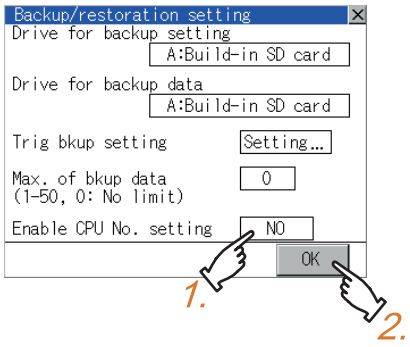

1. Touching the setting item changes the setting items.

2. Touching [OK] button defines the setting contents.
Touching [×] button returns the screen to the [GOT Setup] screen.

■ Trigger backup settings

When the conditions of the trigger specified for each backup setting (Rise, Time) are met, the GOT automatically backs up data.
How to use the trigger backup, refer to the following manual.

☞ GOT1000 Series Extended/Option Functions Manual for GT Works3

■ Display operation of Trigger backup setting

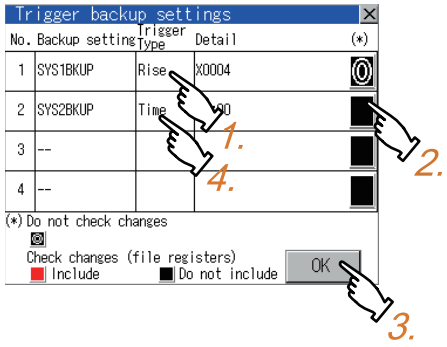

1. Touching a setting item for the trigger type changes the setting.

(None → Rise → Time)

None	:	The GOT does not execute the trigger backup.
Rise	:	The GOT backs up data when the trigger device turns on.
Time	:	The GOT backs up data at the specified time.

2. Touching a setting item for [Check changes (file register)] changes the setting.

◎	:	The GOT backs up data regardless that the backup data are changed or not.
■	:	When the backup is executed, the GOT checks if the backup data or file registers are changed after the previous backup. When the data or file registers are changed, the GOT backs up the changed data or file registers.
■	:	When the backup is executed, the GOT checks if the backup data are changed after the previous backup. When the data are changed, the GOT backs up the changed data. The GOT does not check if the file registers are changed or not.

3. When the trigger type is changed, the setting is defined by touching the [OK] button.
Touching [×] button returns the screen to the backup/restoration setting screen.

4. When the trigger type is set to [Time], touching a setting item for [Detail] switches the screen to the trigger time setting screen.
In the screen, specify the days and time that the GOT executes the backup.

Day	:	Select days that the GOT executes the backup by touching displayed items. Multiple days can be selected.
Time	:	Set the time that the GOT executes the backup by touching the displayed item.

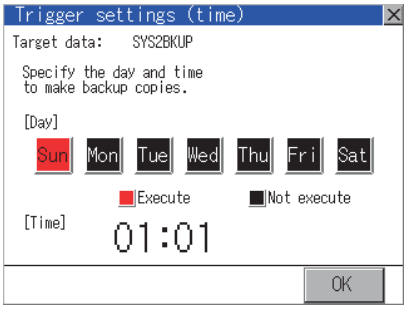

POINT

Precautions for setting

When the trigger type is set to [Rise], set the trigger device with GT Designer3 in advance.
Failure to do so disables the backup setting with [Rise] set.

12.5 Behavior of Duplicate IPs

■ Setting function for Behavior of duplicate IPs

The GOT operation can be set when a device with the same IP address as that of the GOT is added to the network afterwards.

Function	Description	Setting range
Behavior of duplicate IPs	The GOT operation can be set when a device with the same IP address as that of the GOT is added to the network afterwards.	Maintain a network connection(rec) /Do not maintain a network connection (Default: Maintain a network connection (rec))

POINT

(1) When the IP address duplication is not checked
When the IP address of the GOT is set to 192.168.0.18, the IP address duplication check is not performed.
Depending on the device to connect with the GOT, the IP address duplication check may not be performed.

(2) When the GOT is added to the network in which a device with the same IP address as that of the GOT exists
The GOT goes into offline status and displays the following dialog box.

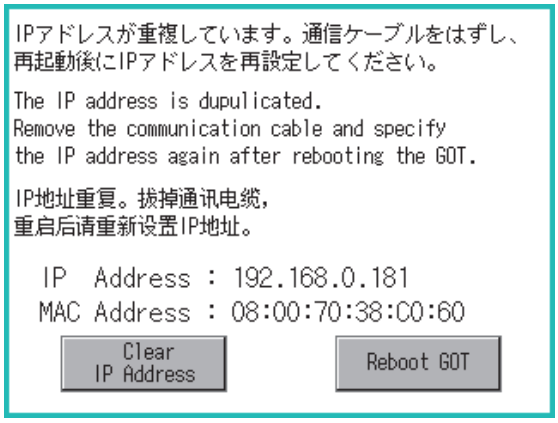

- When changing the IP address of another device which has the same IP address as that of the GOT
  After changing the IP address of another device which has the same address as that of the GOT, touch the [Reboot GOT] button to restart the GOT.
- When changing the IP address of the GOT
  Touch the [Clear IP Address] button to clear the IP address of the GOT.
  After touching the [Reboot GOT] button to restart the GOT, change the IP address of the GOT using the Utility.

■ Display operation of Behavior of duplicate IPs

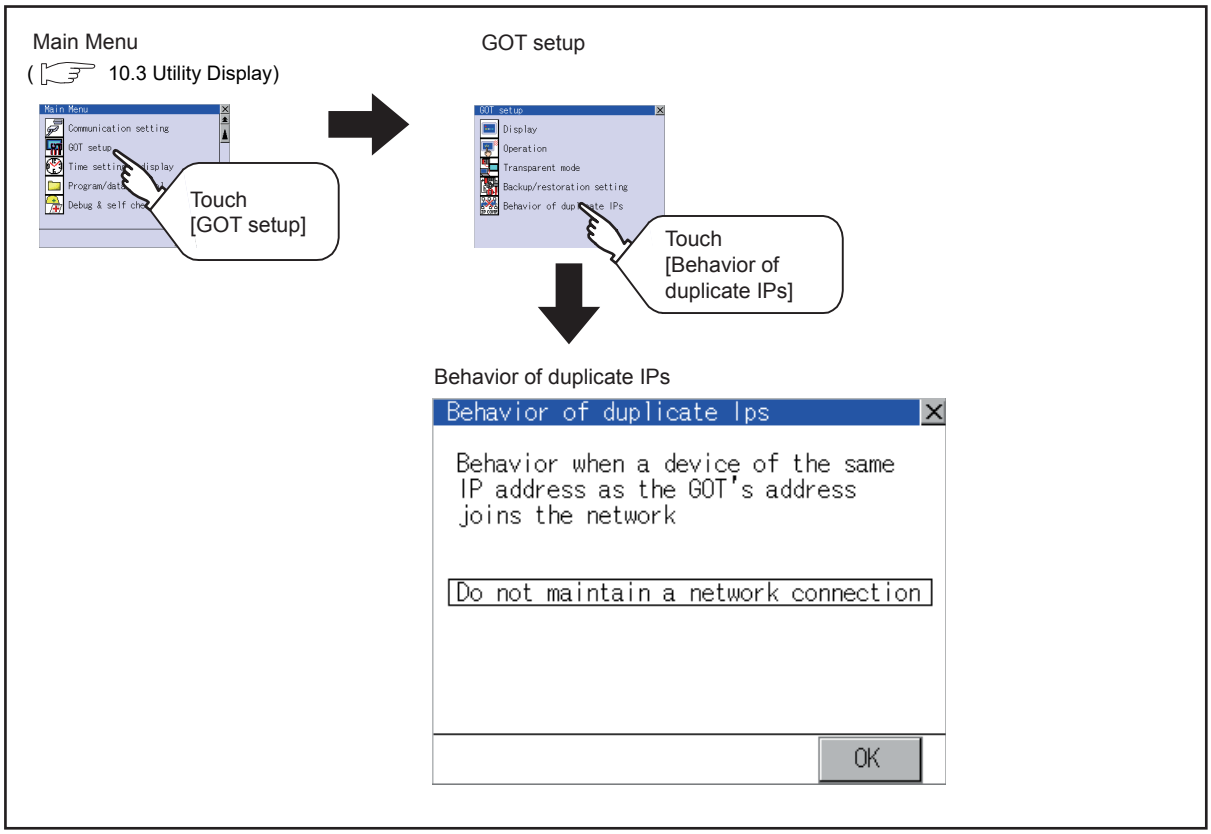

■ Setting operation of Behavior of duplicate IPs

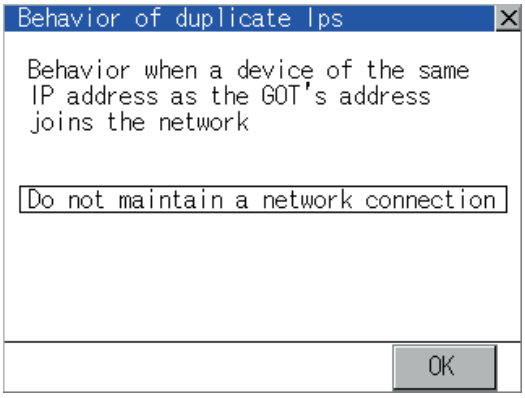

1. Touching the setting item changes the setting items.
   - Maintain a network connection (rec):
     The GOT stays connected to the network when a device with the same IP address as that of the GOT is added to the network afterwards.
     A system alarm occurs.
   - Do not maintain a network connection:
     The GOT is disconnected from the network when a device with the same IP address as that of the GOT is added to the network afterwards.

2. Touching [OK] button defines the setting contents.
   Touching [×] button restarts the GOT and reflects the setting contents.

POINT

(1) Precautions for selecting [Do not maintain a network connection]
When selecting [Do not maintain a network connection], the GOT is disconnected from the network at the addition of a device with the same IP address as the GOT.
Therefore, there is a possibility that the running GOT cannot be communicated by IP address setting mistakes or intended actions by malicious users, and the system control may be influenced by those errors.
Please change the setting of [Behavior of duplicate IPs] after carefully examining the necessity.

(2) Precautions for using a switching hub compatible with the spanning tree protocol
For the switching hub port connected with the GOT, configure the setting (PortFast or others) that makes the GOT be ready for communications (forwarding state). The setting is required to make sure that the delay right after the connection by the spanning tree protocol does not occur.
Without the setting, the Ethernet IP address duplication is not correctly detected.
Additionally, the GOT may not be connected to Ethernet correctly.
For the setting that makes the GOT be ready for communications (forwarding state), refer to the user's manual for the switching hub used.

12.6 License Management

For using functions which require a license, register the license for the GOT.
For releasing a registered license for the GOT, also execute on the license management screen.

Item	Description	Setting range
VNC® server function	Registers/deletes the license of the VNC® server function.	-

■ License management function

Registers/deletes the license of the VNC® server function.

For the details of the VNC® server function, refer to the following.

☞ GT Designer3 Version1 Screen Design Manual (Functions)

■ Displaying the License management

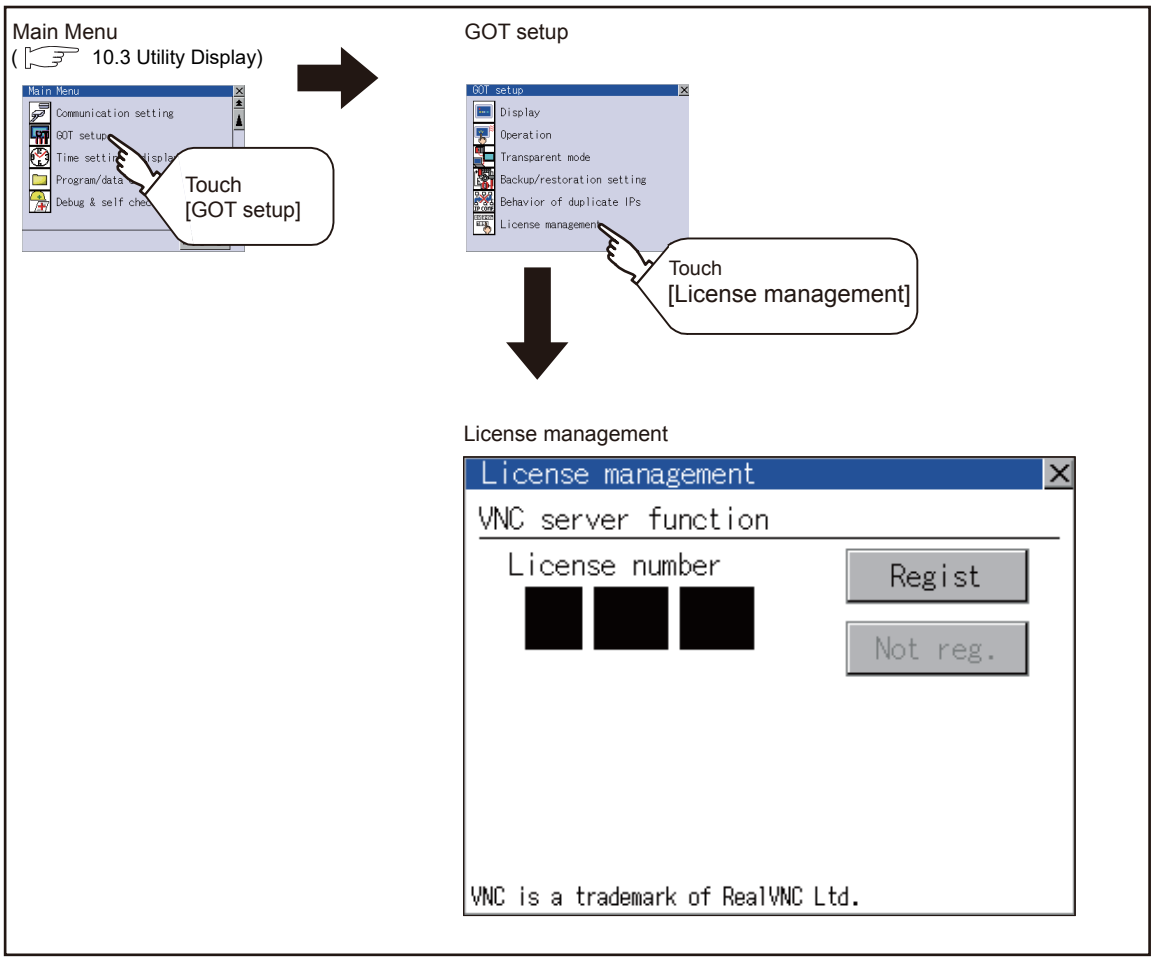

■ Setting operation of License management

(1) When registering a license number for the GOT

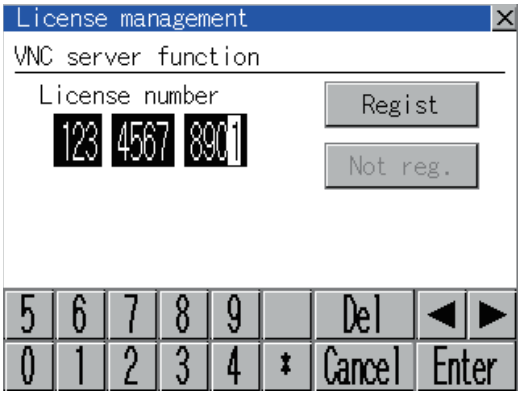

1. Touch the license number input area on the license management screen, and then the keyboard appears on the bottom of the screen.
2. Touch the [Regist] button to register the input license number. If the [×] button is touched without touching the [Regist] button, the license number is not registered.
3. After a license number is registered, touch the [×] button to close the license management screen.

(2) When releasing a license number for the GOT

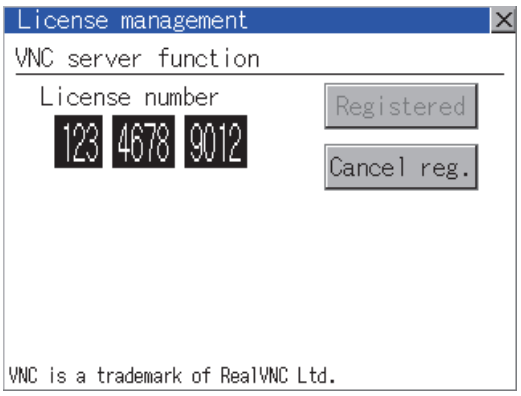

1. Touch the [Cancel reg.] button to release the registered license number.
2. Touch the [×] button to close the license management screen.

POINT

How to acquire a license number

For how to acquire a license number, please consult your local Mitsubishi (Electric System) Service center or representative.

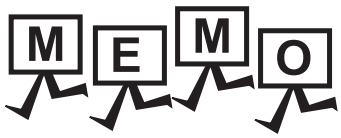
MEMO

13. CLOCK SETTINGS AND BATTERY STATUS DISPLAY (TIME SETTING AND DISPLAY)

Setting items for clock display can be displayed from the GOT utility screen.

13.1 Time Setting and Display

13.1.1 Time setting and display functions

Time settings and displaying of the status of GOT built-in battery are possible.

Function	Description	Reference
Clock setting	Setup the method to adjust the time between GOT clock data and clock data of PLC CPU connected with GOT.	13-2
Clock display	Carry out the display and setup of GOT clock data.	13-3
GOT internal battery voltage status	Displays GOT internal battery voltage status.	13-3

POINT

Changing times

When the time is changed on the Time setting & display screen, the changed time is written in a programmable controller even though [Adjust] or [Broadcast] is set for [Time setting].
As a result, the time of the programmable controller can be changed on the GOT even though [Adjust] is set for [Time setting].
(The clock data of the controller set as [Adjust CH No.] of [Time setting] in [GOT Setup] ([Clock Setting]) from [GOT Environment Settings] of GT Designer3 is changed.)
For details of [Adjust] and [Broadcast], refer to the following manual.

☞ GT Designer3 Version1 Screen Design Manual (Fundamentals)

■ Display operation of time setting

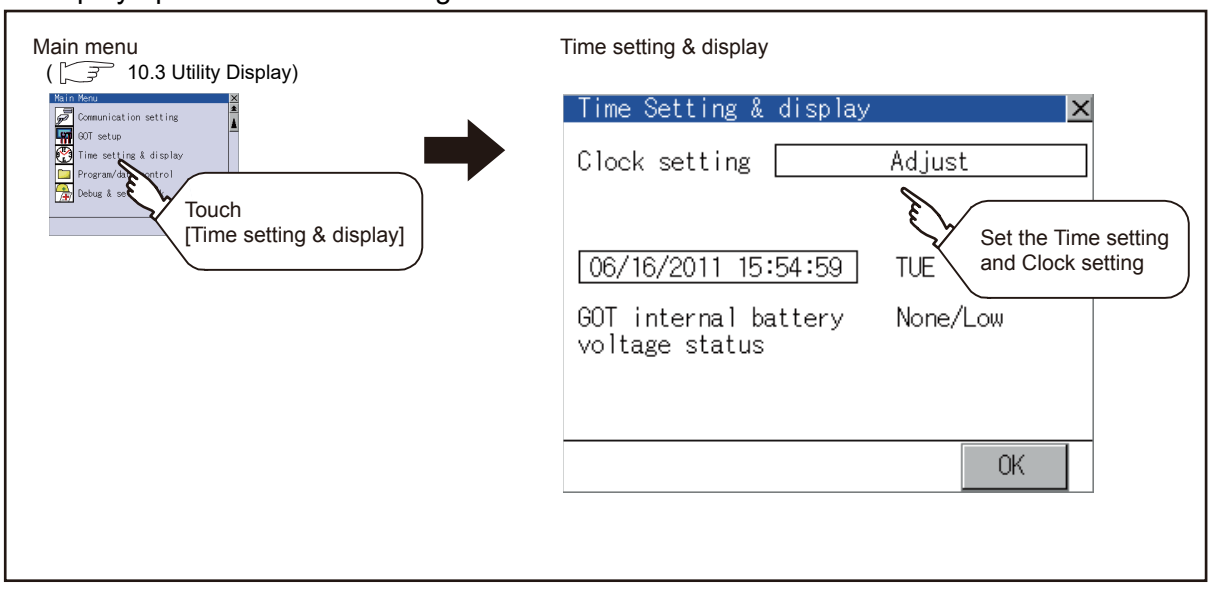

■ Operation of time setting

(1) Clock setting

Setup the method to adjust the time between GOT clock data and the clock data of controller connected to the GOT.

It is same as set in the GOT setup in Environmental Setting of GT Designer3

☞ GT Designer3 Version1 Screen Design Manual (Fundamentals)

Setting	Description
Adjust	Adjust the time of GOT clock data to the clock data of controller. 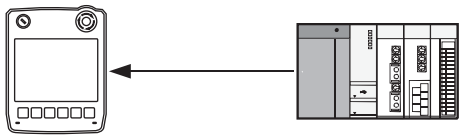
Broadcast	Adjust the time of controller clock data to the GOT clock data. 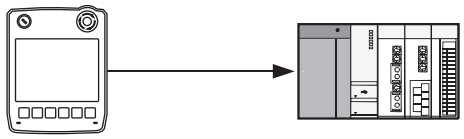
Adjust/Broadcast	Adjust the GOT and controllers to the controller whose clock data is used as a base. 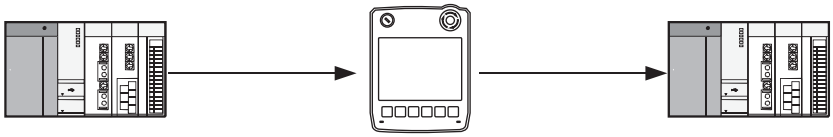
None	No adjustment of clock data.

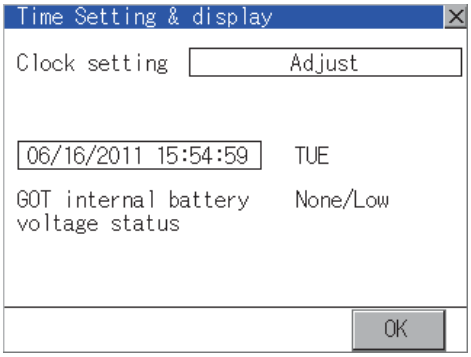

1. Touching the setup item changes the setup contents.

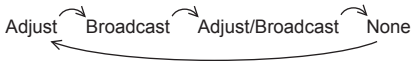

2. Touching [OK] button reflects the setup contents.
Touching the [×] button restarts the GOT.
After restarting, the GOT operates with the changed setting.

POINT

(1) When connecting with an external device which does not have clock function.
If set to [Adjust] or [Broadcast] for [Clock setting] while the GOT is connected with external devices (PLC or microcomputers) which do not have clock function, the clock data will not be adjusted.
For the list of PLC installed with clock function, refer to the following.

☞ GOT1000 Series Connection Manual for GT Works3

(2) Setting of clock setting and battery
When selecting [Broadcast] or [None] in clock setting, set the clock of the GOT once with connecting a battery to the GOT.

(3) Operation setting by GT Designer3
Carry out the setting of clock setting in [GOT set up] in [Environmental Setting] of GT Designer3.
To change a part of the setting after downloading the project data, change the setting at the display setting of GOT.

☞ GT Designer3 Version1 Screen Design Manual (Fundamentals)

(2) Clock display

Carry out the display and setting of GOT clock data.
The setup methods of clock data are shown below.

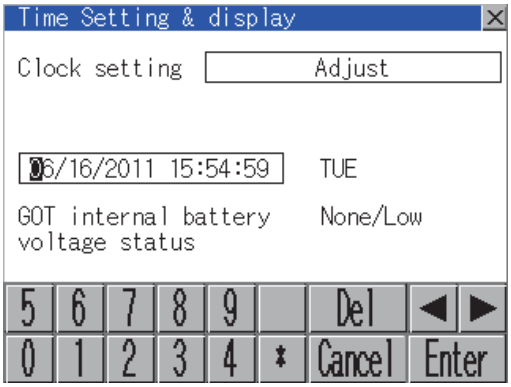

1. Touching the clock display section displays the keyboard for input and stops the clock update.

2. Input time with the keyboard by referring to the table below.
Input the scheduled time when the operation of 3. is to be carried out since the input time is reflected at the time of the operation of 3..
The day of the week is displayed automatically according to the input date.
The effective range of clock setting is as follows.
Jan. 1, 2000 to Dec. 31, 2037

Key	Description
0 to 9	Input numeric value in cursor position.
◀ / ▶	Move the cursor.
Del	Move the cursor to the left by one character when [Del] Key is touched while inputting year, month, day, time, minutes, seconds. Carry out nothing when touched other than when inputting the above.
Enter	Close the keyboard after the input time is displayed in clock display. The update of the clock display does not restart even if the keyboard is closed. The update of the clock display restarts with the operation of 3. .
Cancel	Cancel the input time and returns the time of clock display to the time at which the keyboard was displayed and close the keyboard. The update of the clock display does not restart even if the keyboard is closed. The update of the clock display restarts with the operation of 3. .

3. Touching the [OK] button reflects the settings and restarts updating the clock display.
Then, the settings are reflected to both clock data on the GOT and controller.

Touching [×] button restarts the GOT if the clock settings is changed, or closes the screen if clock settings is not changed.

(3) GOT internal battery voltage status

Displays battery voltage status.

Display	Status
Normal	Normal
Low/None	Low voltage

When the battery voltage is low, replace the battery immediately.
For battery replacement procedure, refer to the following.

☞ 6.3.2 Battery replacement procedure

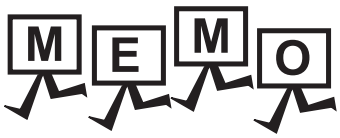
MEMO

14. FILE DISPLAY AND COPY (PROGRAM/DATA CONTROL)

The display of OS, project data or alarm data which is written in the GOT or SD card and the data transmission between GOT and SD card/USB memory are possible.
The format of the SD card/USB memory is also possible.

14.1 Data Storage Location

14.1.1 Data type and storage location

■ System

The data storage location and transferring (write/read) route for each data type are shown below.
Also, the data storage locations are shown below.

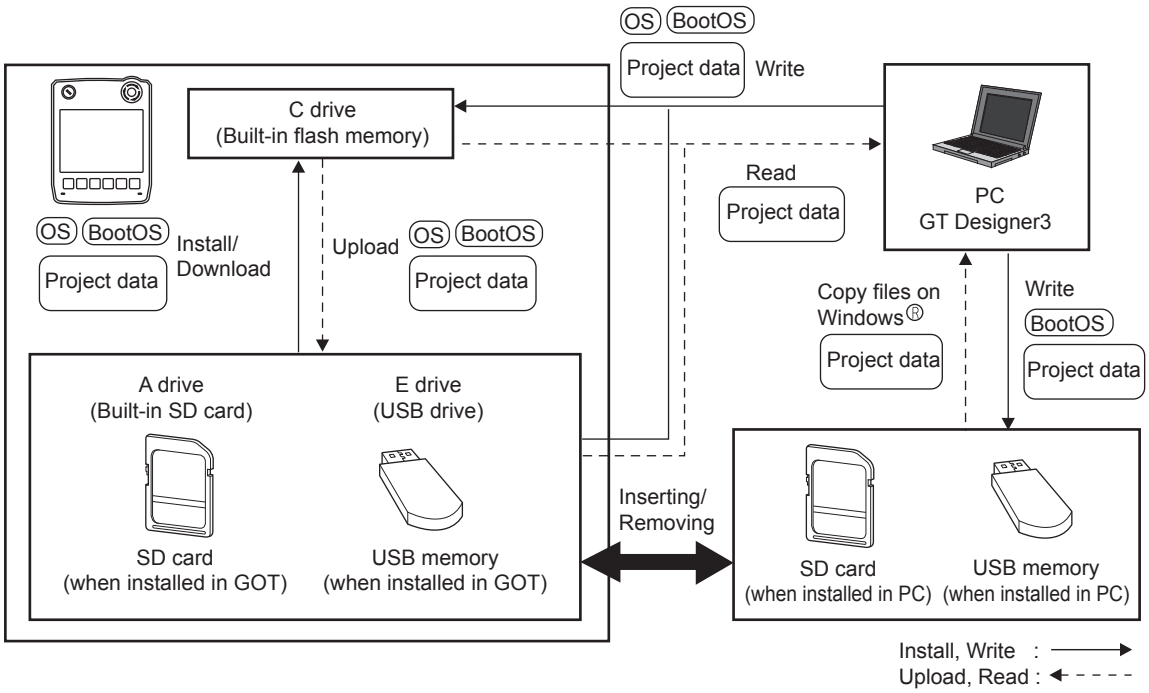

The data of the Flash Memory (Project data, etc.) can be saved even if the battery voltage becomes low.

Item	Data type	Storage location
BootOS	BootOS	Built-in flash memory (C drive)
OS *1	Standard monitor OS	Built-in SD card (A drive) Built-in flash memory (C drive) *2
	Communication driver	
	Extended function OS	
	Option OS	
Project data *1	Project data (Including recipe setting, alarm conditions, time action, and GOT setup.)	Built-in SD card (A drive) Built-in flash memory (C drive) *2

*1 The USB memory can be used from Utility.
17.3.2 Installing using the program/data control function (Utility)

*2 When using the project data stored in the built-in SD card (A drive) with the GOT, hold the SD card installed to the GOT. The USB memory cannot be activated directly from the E drive. It can be used only for data storage.

■ At maintenance

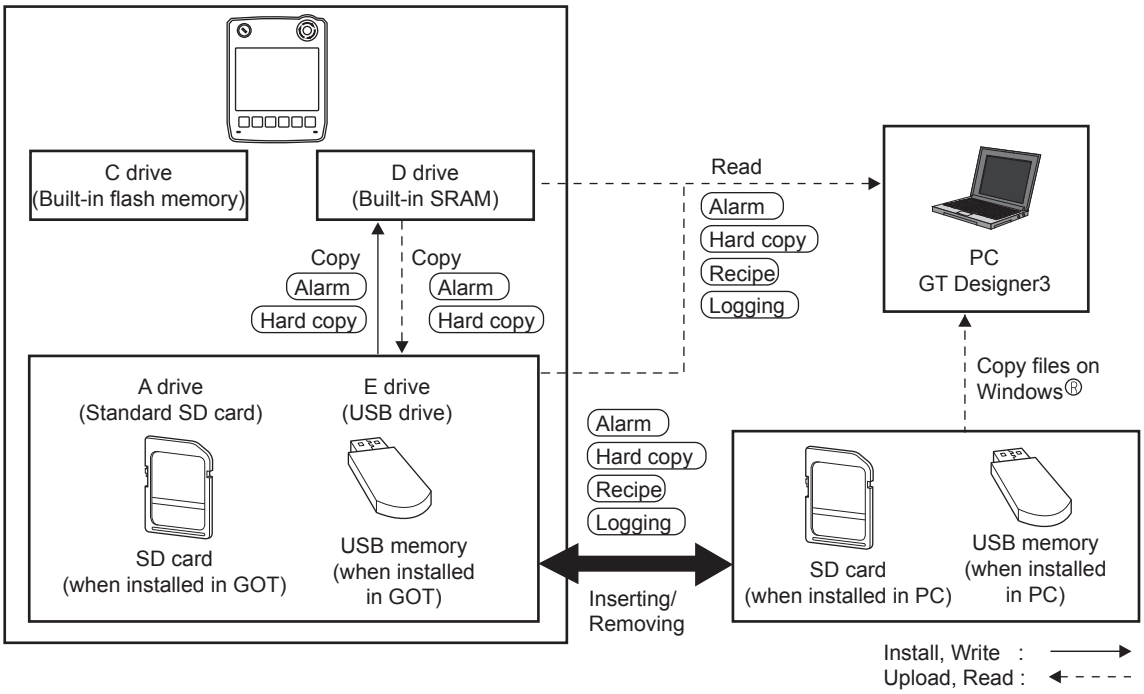

Item	Data type	Storage location
Alarm	Alarm data (Extended alarm log file and alarm log file)	Built-in SD card (A drive) Internal SRAM (D drive) USB drive (E drive)*1
Recipe	Recipe data (Advanced recipe file, Recipe file)	
Logging	Logging (Logging file)	
Hard copy	Image file (Hard copy function)	

*1 The USB memory can be used from Utility.

POINT

Checking the available memory of storage location

When saving resource data, check available memory of storage location before use.
Memory capacity of internal SRAM (D drive) is 512 kbytes. Use the built-in SD card (A drive) if the available memory is not enough.

14.1.2 OS version confirmation

Confirm the OS version carefully when install BootOS and Standard monitor OS.
When OS is installed, GOT checks and compares the OS version automatically.

(1) When install BootOS

When the BootOS to be installed has the older major version, GOT displays the installation disapproving message to cancel the installation so that the older version may not be written.
(Even when the version of the BootOS to be installed has the same or later version, the version information and the dialog for selecting continue/not continue will be displayed.)
Depending on the Installation method, the dialog box to be displayed varies.

- When installing from the built-in SD card, the dialog box is displayed by the main unit.
- When installing from GT Designer3 via USB or Ethernet, the dialog box is displayed by the GT Designer3

(2) When install Standard monitor OS, communication driver, Option OS

When Standard monitor OS, communication driver, or Option OS has already been installed, the version information of the OS which has been installed and the dialog for selecting continue/not continue will be displayed.
Moreover, when the different versions will coexist among all OSs (Standard monitor OS, communication driver, and Option OS) by installing OS, the installation disapproving dialog will be displayed and the installation process is canceled.

(3) When download project data

GOT automatically compares the version between the project data to be downloaded and the installed OS.
When the versions are different, the dialog confirming whether to install the OS together is displayed.
When downloading the project data from the SD card or USB memory, storing the project data and OS beforehand is recommended.
The version of each OS installed in the GOT can be confirmed by [Property] of [OS information] screen.

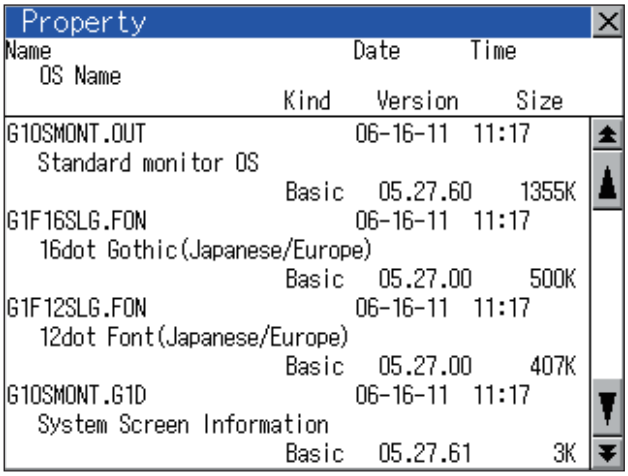

Explanation of OS version
01.00.00.A
- BootOS version (Appears only when the property of the BootOS is displayed.)
- Minor version
- Major version

For details of the screen display operation, refer to the following.

14.2.1 OS information

POINT

Version confirmation of BootOS by rating plate

Check the version of BootOS installed in GOT at product shipment on the rating plate on GOT rear face.

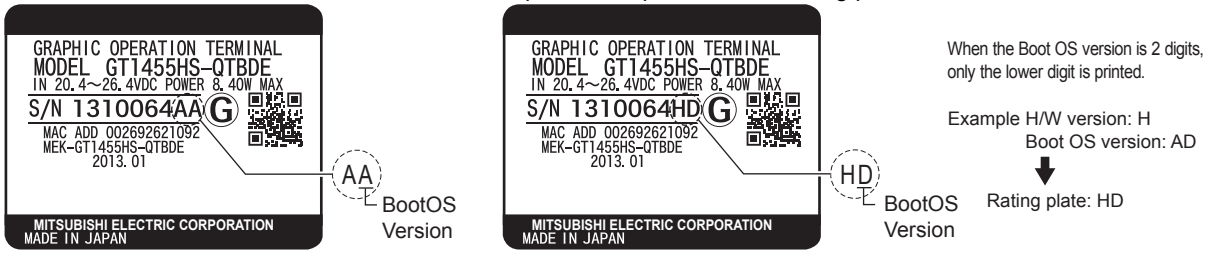

14.1.3 Capacity confirmation of the project data downloading location

When download the project data, confirm the capacity of the user area in the drive to which transferred, the transferred project data size, the transfer size and buffering area size of the optional function OS in advance to judge whether to carry out the download.
The capacities can be confirmed by GT Designer3. For details, refer to the following.

☞ GT Designer3 Version1 Screen Design Manual (Fundamentals)

14.1.4 Display file

The display screen and storage destination for each type of data are shown below.
The file name and contents of each data can be displayed with property display of the utility

Item		Display screen	Storage destination (Drive name/folder name)
BootOS		OS information screen	A drive/C drive/E drive : \G1BOOT*2
Standard monitor OS	Standard monitor OS system screen data		A drive/C drive/E drive*3 : \G1SYS*2
	Standard monitor OS system screen management information file		
	Standard monitor OS (monitor function)		
	6 × 8-dot font (ASCII characters)		
	24-dot numerical HQ font		
	32-dot numerical HQ font		
	TrueType numerical font		
	12-dot standard font		
	16-dot standard font		
Extended function OS			
Option OS			
Communication driver			
Project data*1		Project information screen	A drive/C drive/E drive*3 :\PROJECT1*2*4
	User-created screen data		
	Comment data		
	12-dot HQ fonts (Mincho/Gothic)		
	16-dot HQ fonts (Mincho/Gothic)		
	TrueType (Mincho/Gothic)		
Resource data	Advanced alarm log file CSV file*5	Alarm information screen	A drive/D drive/E drive *6 : \ With GT Designer3, any folder name or file name can be specified.*2
	Advanced alarm log file TXT file*5		
	Advanced alarm log file binary file*5		
	Alarm log file CSV file*5		
	Hard copy file BMP file*5	Hard copy information screen	
	Hard copy file JPG file*5		
	Advanced recipe file CSV file*5	Advanced recipe information screen	
	Advanced recipe file TXT file*5		
	Advanced recipe file binary file*5		
	Logging file CSV file*5	Logging information screen	
	Logging file TXT file*5		
	Logging file binary file*5		

*1 The user-created screen data, comment data, and font data are displayed as project data.
*2 Each folder is created automatically when a file is installed, downloaded, or uploaded.
*3 The USB memory cannot be activated directly from the E drive. It can be used only for data storage.

☞ 14.2.1 OS information

*4 The folder names and file names can be set at [System Settings] in [System Environment] of GT Designer3.

☞ GT Designer3 Version1 Screen Design Manual (Fundamentals)

*5 A serial number is automatically added to file names.
*6 Each function does not provide direct storage to the E drive.

14.2 Various Data Control

14.2.1 OS information

■ Function of OS information

Each file name/folder name of BootOS and OS (Standard monitor OS, PC communication driver and Option OS) by which each drive (A: Built-in SD card, C: Built-in flash memory, E: USB memory) holds can be displayed in lists. Installation and uploading of the files are also possible.

Function	Description	Reference
Displaying file, folder data	The file/folder type, name, data size and creating date & time are displayed.	14-6, 14-7
Install	All OS files written in the A drive (Built-in SD card)/E drive (USB drive) can be installed in the C drive (Built-in flash memory).	14-8
Upload	All OS files in the C drive (Built-in flash memory) can be uploaded to the A drive (Built-in SD card)/ E drive (USB drive).	14-9
Property display	Displays the property (file name, data size, type, version and creation date) of the file.	14-10
Data check	Data check of files is possible.	14-10

POINT

(1) Notes on installing OS
If the Boot OS or the Standard monitor OS is installed, such data on the GOT as the project data will be deleted.
After installing the Boot OS or the Standard monitor OS, reinstall/download necessary data.

(2) Notes on handling OS files
When the OS boot drive is set to [A: Built-in SD card], installing and uploading OS files are not available.

■ Display operation of OS information

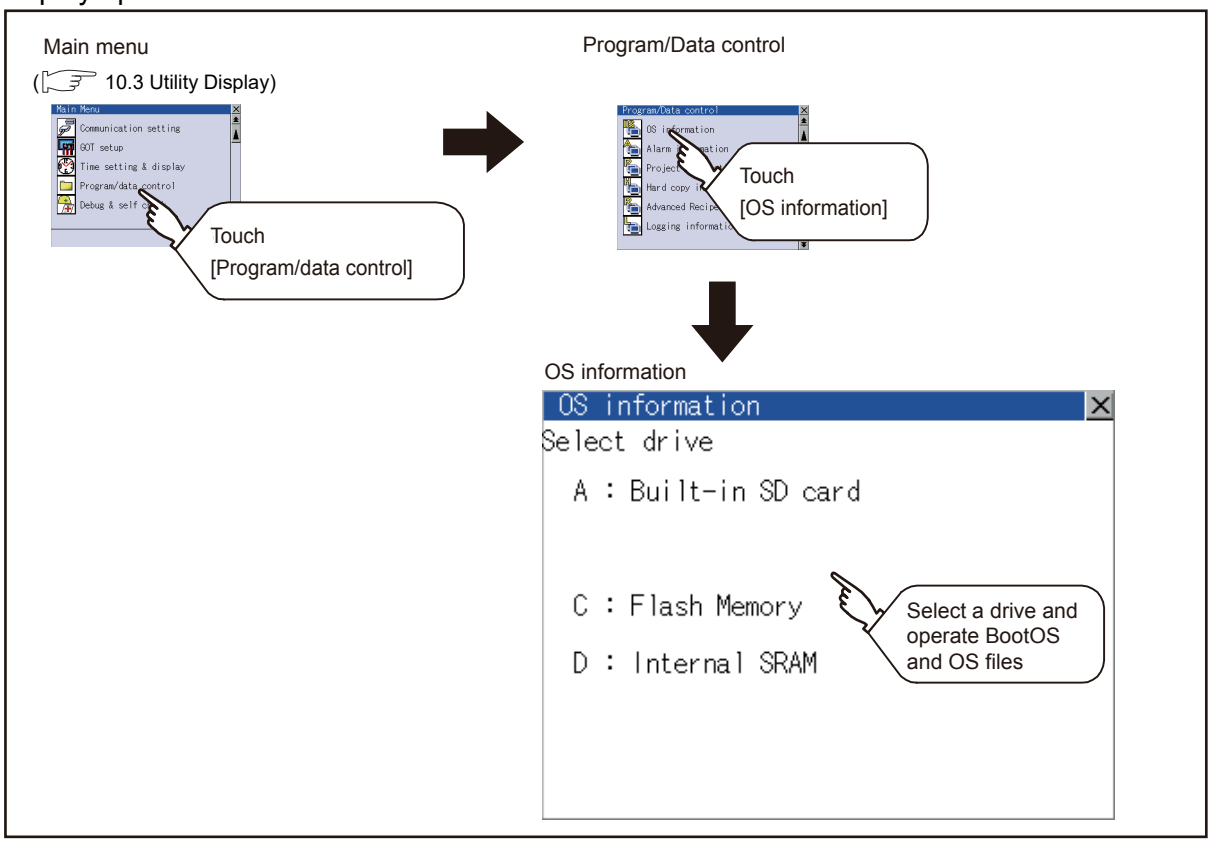

■ Display example of OS information

OS information

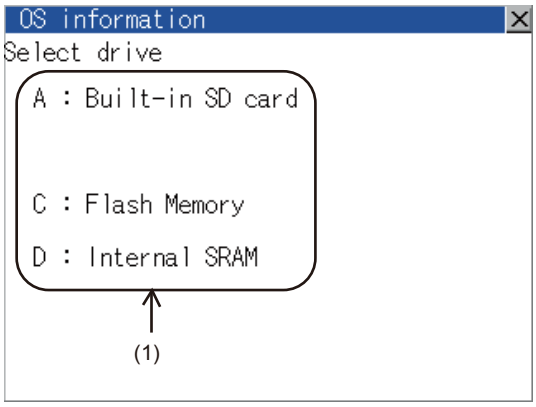

OS information Storage file/folder display screen

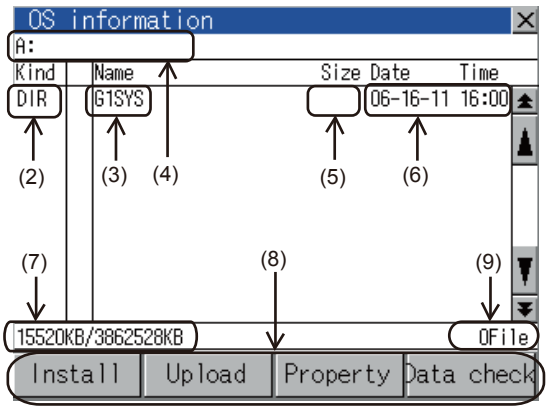

Number	Item	Description
(1)	Select drive	The target drive which displays file or folder can be selected. When the SD card is not installed, [A:Built-in SD card] is not displayed. If the USB memory is not installed, [E: USB drive] is not displayed.
(2)	Kind	Indicates the type of the displayed name (file or folder). In case of file, displays the extension; in case of folder, displays "DIR".
(3)	Name	The file name or folder name which is stored in the selected drive or folder is displayed. When the file name or folder name exceeds 20 characters, the exceeding characters (the 21st character or after) are not displayed.
(4)	Path name	Displays the path name of drive/folder which is currently displayed.
(5)	Size	Displays the size of the file displayed in [Name].
(6)	Date and time	The date and time when each file was created are displayed.
(7)	The size of drive	Displays the size in use and the entire size of the drive which is selected by drive selection. (Only the size in use is displayed when selecting the C drive.)
(8)	Operation switch	Execution switch of each function.
(9)	Number of files	Displays the total number of the displayed files.

POINT

Folders and files displayed

For the folders and files displayed, refer to the following.

☞ 14.1.4 Display file

■ OS information operation

(1) Display operation of OS information

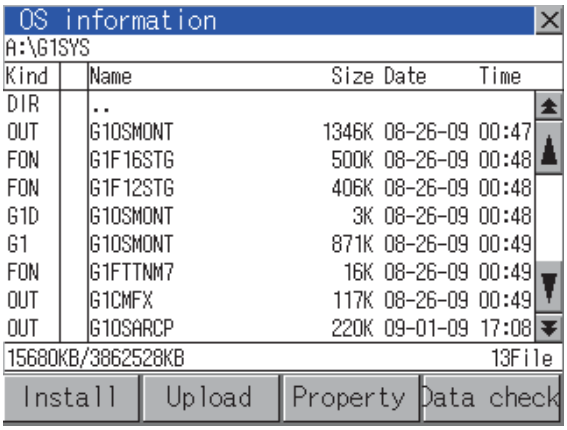

1. Touching a drive in [Select drive] displays the information of the first folder of the touched drive.
2. Touching a folder name displays the information of the touched folder.
3. Touching a folder name of [. .] displays the information of the folder in one upper hierarchy.
4. Touching ▲▼ button of the scrollbar scrolls up/down the screen by one line.
   Touching ⏫⏬ button scrolls up/down the screen by one screen.
5. Touching a file name selects and inverts the file.
6. For operation of installation, upload, property, data check, refer to the following.
   Install..... This section (2)
   Upload..... This section (3)
   Property ..... This section (4)
   Data check ..... This section (5)
7. [Touching [×] button closes the screen.

(2) Installation operation

BootOS and OS which are written in the A drive (built-in SD card) or E drive (USB drive) can be installed in GOT.
(This item explains using the A drive.)

1. Install the SD card to which the BootOS or OS to install is written to the GOT.
For inserting/removing method of SD card/USB memory, refer to the following.

6.1.2 Installing and removing procedures of the SD card
6.2.2 Installing and removing procedures of the USB memory

2. Touch [A: Built-in SD card] of [Select drive].

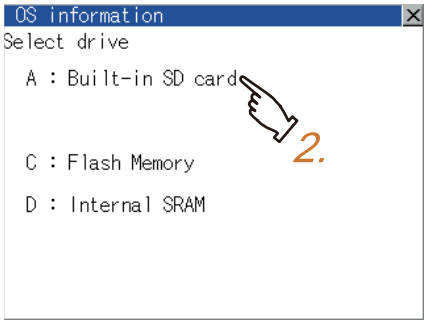

3. Touching [Install] button starts the install.

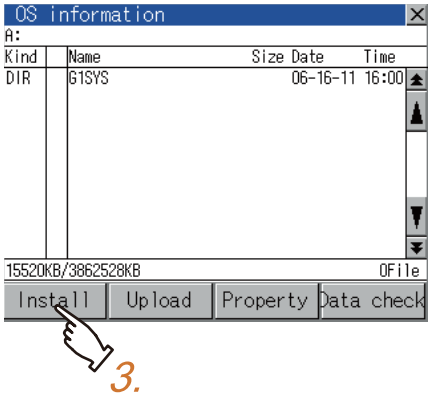

4. When the installation is completed, the dialog shown left is displayed.
Touching [OK] button restarts GOT.

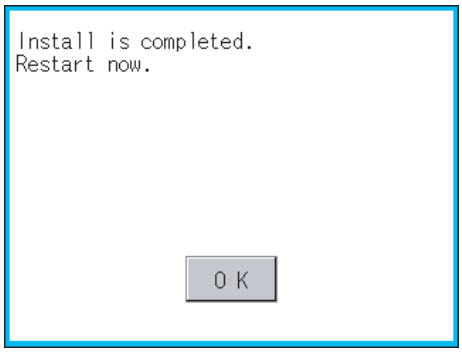

(3) Upload operation

BootOS and OS in the C drive (Flash Memory) can be uploaded to the A drive (Built-in SD card) and E drive (USB drive).
The SD card after uploading can be used for installing the OS on another GOT.

17. INSTALLATION OF COREOS, BOOTOS AND STANDARD MONITOR OS

(This item explains using the A drive.)

1. Install the SD card used as the uploading destination to GOT.
For inserting/removing method of SD card/USB memory, refer to the following.

6.1.2 Installing and removing procedures of the SD card
6.2.2 Installing and removing procedures of the USB memory

2. Touch [A: Built-in SD card] of [Select drive].

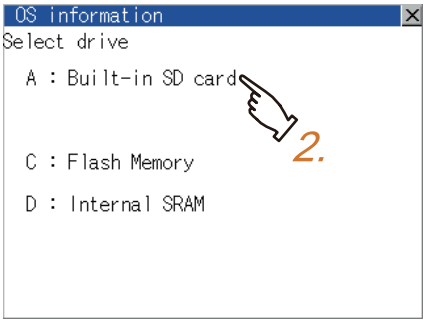

3. Touching [Upload] starts the uploading.

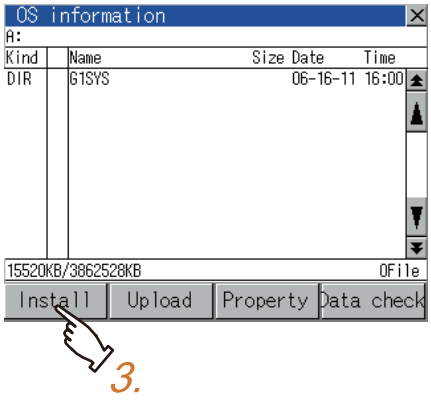

4. When the upload is completed, the dialog shown left is displayed.
Touching [OK] button closes the dialog.

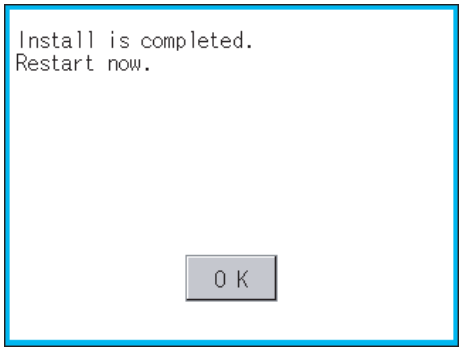

(4) Property display operation

Displays the property of the file stored in the selected folder.

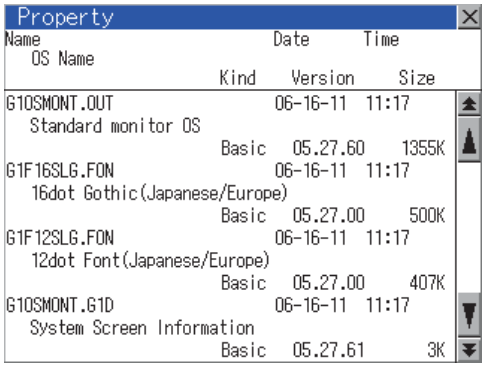

1. Touching [Property] button after selecting the property displaying target folder displays the [Property] screen shown left.
In the [Property] screen, the following information is displayed for each file selected by 1..

Item	Description
Name	Displays the file name.
Size	Displays the file size.
Kind	Displays the following items according to the kind of the files. Boot: BootOS Basic: Standard monitor OS Extend: Extend function OS Option: Optional function OS Comm.: Communication driver
Version	Displays the version of BootOS and OS.
Date, Time	Displays the date and time of the file creation.

2. Touching ▲ ▼ button of the scrollbar scrolls up/down the screen by one line.
Touching ⏫ ⏬ button scrolls up/down the screen by one screen.

3. Touching [×] button returns the screen to the previous screen display.

(5) Data check operation

Carries out data check of the selected system file.

When data is normal.

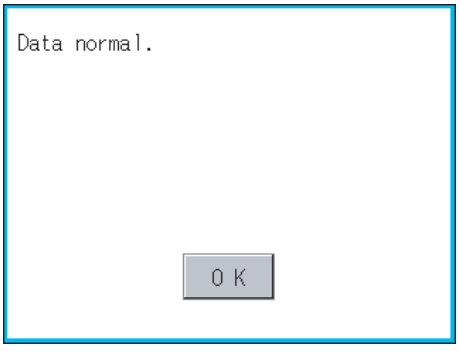

When data is erroneous.

1. Touch [Data check] button after selecting a data check target file. The dialog mentioned left will be displayed after executing data check.

2. Touching [OK] button closes the dialog.

14.2.2 Alarm information

■ Function of alarm information

The extended alarm log file or alarm log file held by each drive (A: Built-in SD card, C: Flash Memory, D: Internal SRAM, E: USB drive) is displayed.
The functions below can be carried out for files.
The USB drive only stores log files, and cannot be displayed.
For details of Advanced Alarm, refer to the following manual.

GT Designer3 Version1 Screen Design Manual (Functions)

Function	Description	Reference
Displaying file, folder data	The file/folder name, data size and creating date & time are displayed.	14-12, 14-13
G1A → CSV conversion	Converts the G1A file of advanced alarm log file to CSV file.	14-14
G1A → TXT conversion	Converts the G1A file of advanced alarm log file to TXT file.	14-14
Delete	File is deleted.	14-15
Copy	File is copied.	14-16

■ Display operation of Alarm information

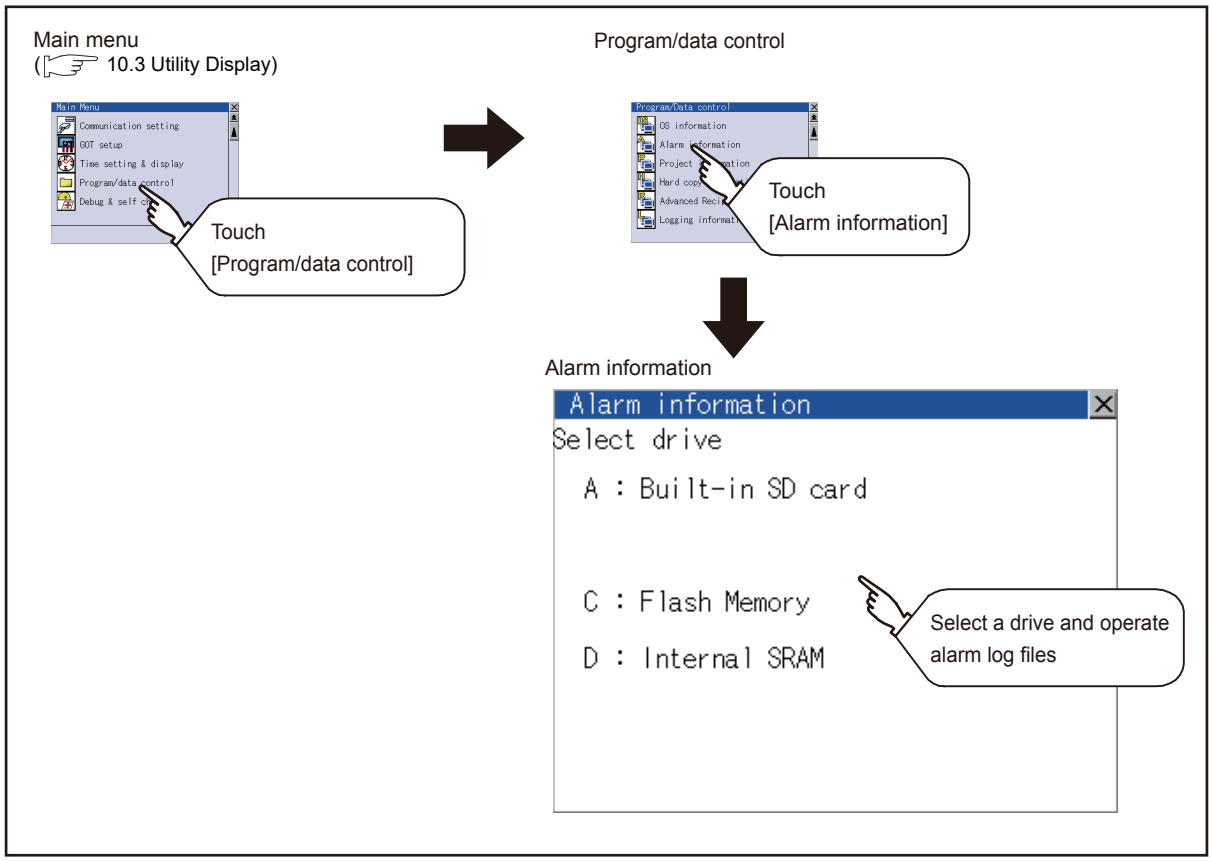

■ Display example of Alarm information

Alarm information screen

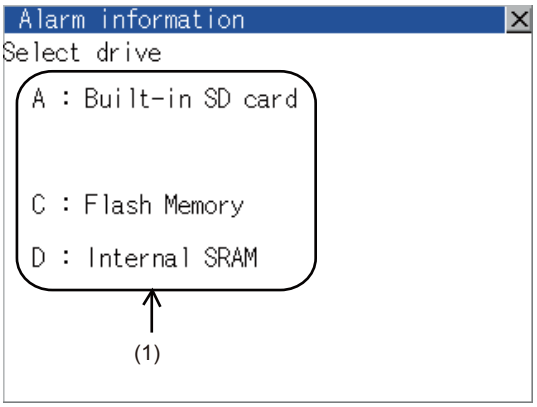

Alarm information: Storage file/folder display screen

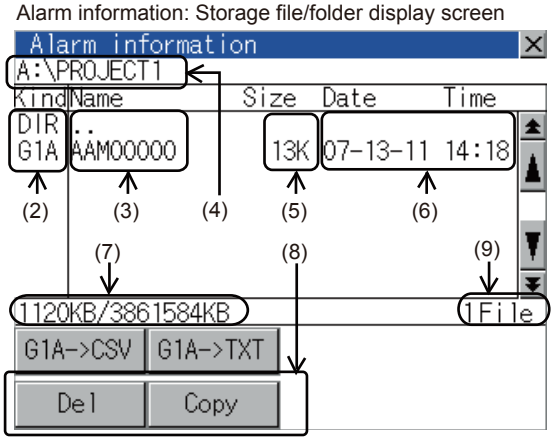

Number	Item	Description
(1)	Select drive	The target drive which displays file or folder can be selected. When SD card or USB memory is not installed, the following drives are not displayed. • SD card: [A: Built-in SD card] • USB memory: [E: USB drive]
(2)	Kind	Indicates the type of the displayed name (file or folder). The file is indicated with an extension, while the folder is indicated with "DIR."
(3)	Name	Displays the file name or folder name. For the long file/folder name, entire part may not be displayed. Confirm the nondisplayed part with the [Copy] button, etc. (☞ 14.2.2 ■Alarm information operation(4)Copy operation) After confirmation, touch the [Cancel] button to cancel the operation.
(4)	Path name	Displays the path name of drive/folder which is currently displayed.
(5)	Size	Displays the size of the file displayed in [Name].
(6)	Date and time	The date and time when each file was created are displayed.
(7)	The size of drive	Displays the size in use and the entire size of the drive which is selected by drive selection. (Only the size in use is displayed when selecting the C drive.)
(8)	Operation switch	Execution switch of each function.
(9)	Number of files	Displays the total number of the displayed files.

POINT

(1) Display of creation date and time
The creation date and time display is not updated even if a file is created or updated while displaying the alarm information display screen.
If close the screen currently displayed (moving the screen to the folder of the upper hierarchy, etc.) and display the screen again, the updated contents are displayed.

(2) Folders and files displayed
For the folders and files displayed, refer to the following.

☞ 14.1.4 Display file

■ Alarm information operation

(1) Display operation of Alarm information

Alarm information screen

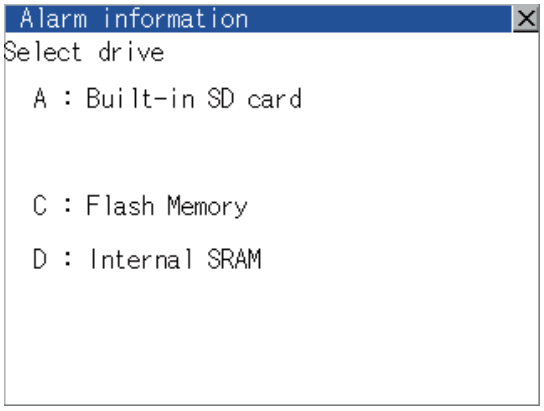

Alarm information: Storage file/folder display screen

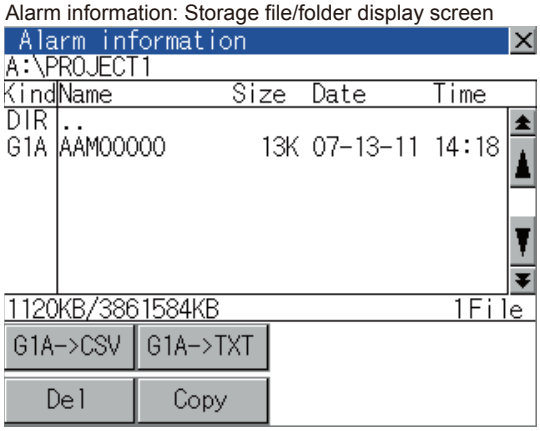

1. Touching a drive of [Select drive] displays the information of the touched drive.
2. Touching a folder name displays the information of the touched folder.
3. Touching a folder of [. .] displays the information of the folder of the one upper hierarchy.
4. Touching ▲ ▼ button of the scrollbar scrolls up/down the screen by one line.

   Touching ⏫ ⏬ button scrolls up/down the screen by one screen.
5. Touching a file name selects the file.
6. For G1A → CSV, G1A → TXT, delete, copy, graph operations, refer to the following.
   G1A → CSV, G1A → TXT ..... This section (2)
   Delete ..... This section (3)
   Copy ..... This section (4)
7. Touching [×] button closes the screen.

(2) G1A → CSV conversion operation, G1A → TXT conversion operation
The selected G1A file is converted to CSV file or TXT file.

(Example: When [G1A → CSV] button is touched)

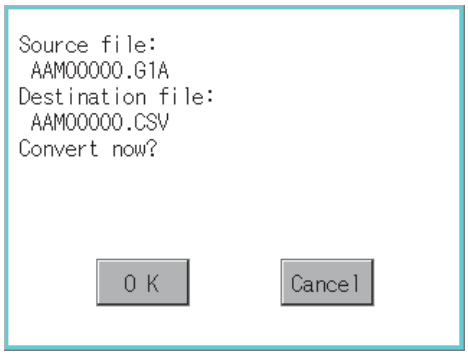

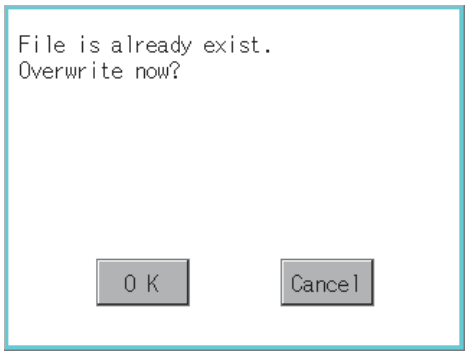

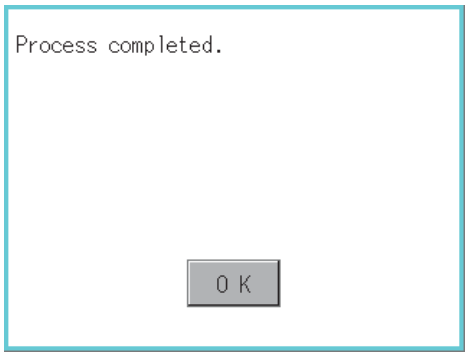

1. Touch and select the G1A file to convert into a CSV file or a TXT file.

2. The following dialog box is displayed when touching the following button according to the file type to convert to.
   • CVS file: [G1A → CSV] Button
   • TXT file: [G1A → TXT] Button

3. Touch [OK] button.
   When the file, whose name is the same, exists in the destination folder, the dialog box shown at left appears without starting the conversion.
   Touching [OK] button overwrites the file.
   Touching [Cancel] button cancels the conversion.

4. The message of completion is displayed in dialog box when conversion is completed.
   Touching [OK] button closes the dialog.

(3) Deletion operation
Deletes selected files.

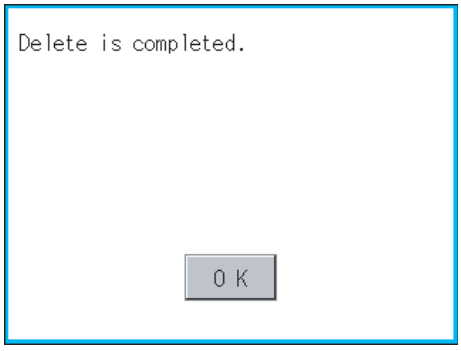

1. Touch and select the file to delete.
2. Touching [Delete] button displays the dialog mentioned left.
Touching [OK] button deletes the file.
Touching [Cancel] button cancels the deletion.

3. When the deletion is completed, the completion dialog is displayed.
Touching [OK] button closes the dialog.

(4) Copy operation

Copies the selected file.

Dialog for selecting a copy destination drive

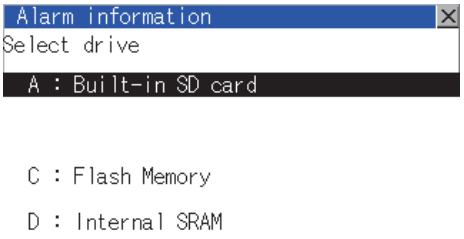

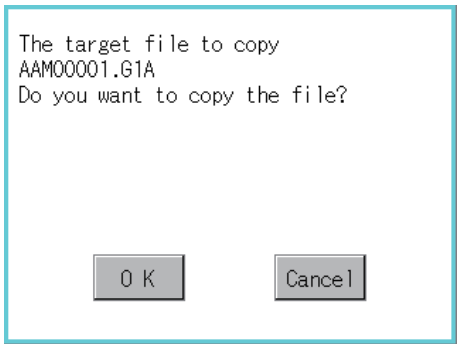

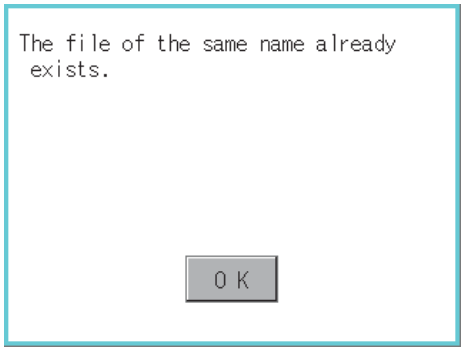

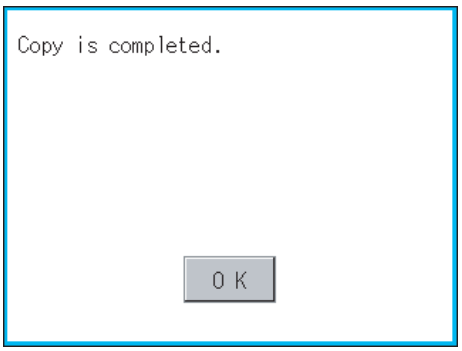

1. Touch and select the file to copy.
2. Touching [Copy] button displays the message [Please select a destination.] in the left bottom of the screen.
3. If the copy destination folder is touched, the screen display is changed to the folder of copy destination. At this time, it cannot be copied into the same folder where the file exists.
   Select other folders.
4. Touching [Exec.] button displays the dialog box shown left.
5. Touch [OK] button.
   If there is a file of the same name in the copy destination folder, the following dialog is displayed without starting the copy.
6. When the copy is completed, the dialog of completion is displayed.
   Touching [OK] button closes the dialog.

14.2.3 Project Information

■ Function of project information

The project data files stored in each drive (A: Built-in SD card, C: Flash Memory, E: USB memory) can be displayed by lists.
In addition, the files can be downloaded, uploaded, deleted or copied, etc.

Function	Description	Reference
Displaying file, folder data	The file/folder type, name, data size and creating date & time are displayed.	14-18, 14-19
Delete	Deletes project data.	14-19
Copy	Copies project data. (can copy the A drive and E drive)	14-20
Property display	Displays the project data creation date, author name and the version of GT Designer3.	14-21
Data check	Data check of files is possible.	14-22
Download	Downloads the project data written in the A drive (Built-in SD card)/E drive (USB drive) to C drive (Flash Memory).	14-22
Setup	The project data to be displayed can be selected.	14-24
Upload	Uploads the project data written in the C drive (Flash Memory) to the A drive (Built-in SD card)/E drive (USB drive).	14-25
Setup cancel	Cancels the item which is selected for the project data to be displayed.	14-26

POINT

Notes on operating project data

When the OS boot drive is set to [A: Built-in SD card], deleting, copying, downloading, setting up, and uploading project data are not available.

■ Display operation of Project information

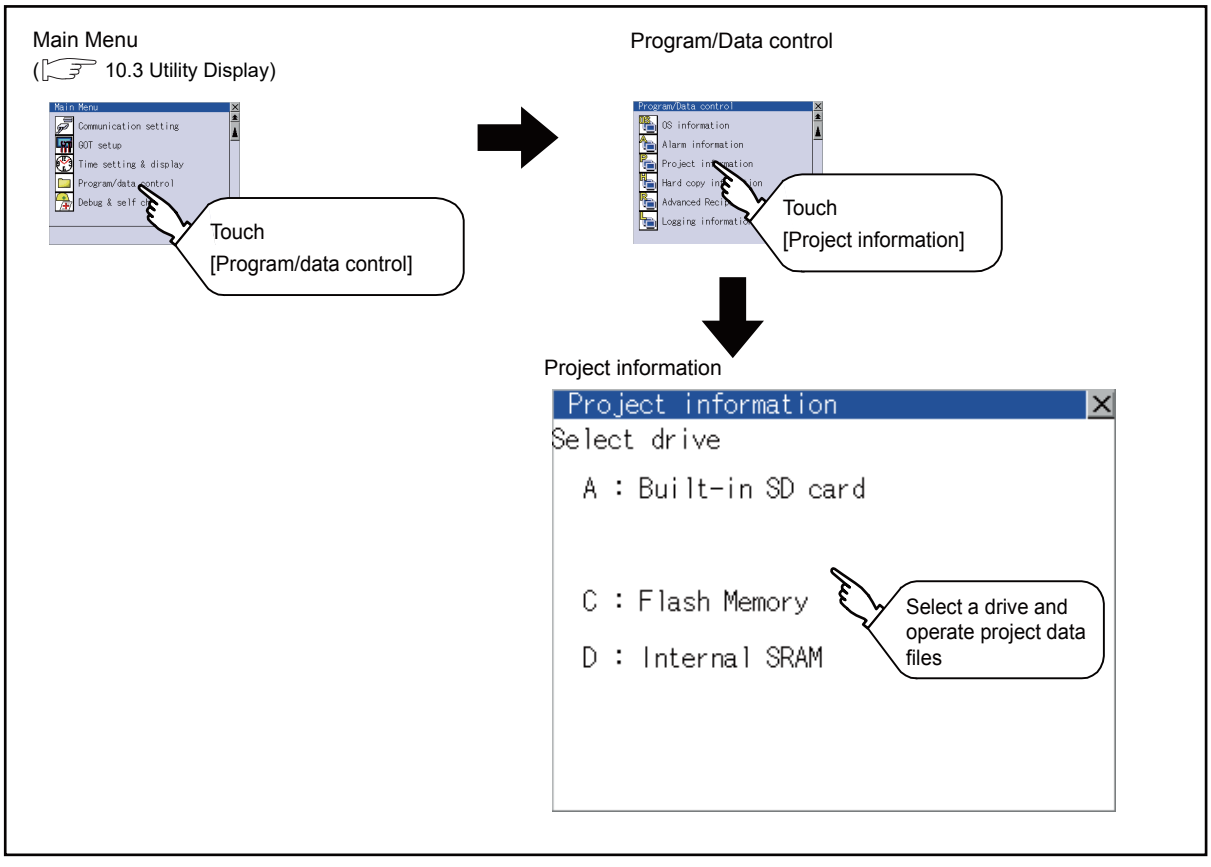

■ Display example of Project information

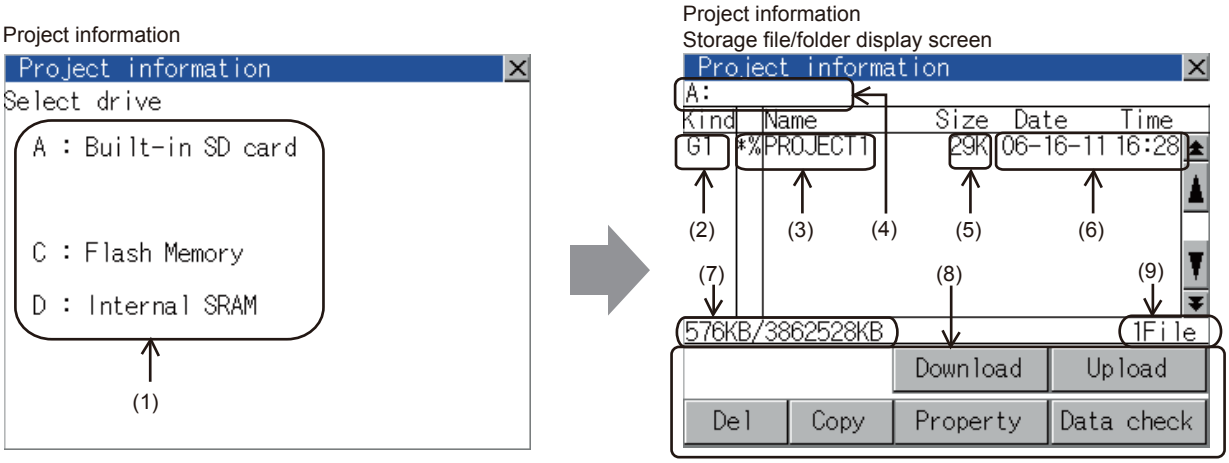

Number	Item	Description
(1)	Select drive	The drive by which a file or folder is displayed can be selected. When the SD card is not installed, [A:Built-in SD card] is not displayed. If the USB memory is not installed, [E: USB drive] is not displayed.
(2)	Kind	Indicates the type of the displayed name (file or folder). The file is indicated with an extension, while the folder is indicated with "DIR."
(3)	Name	Displays the project data (Project Folder) in the selected drive. When the name exceeds 18 characters, the 19th and later characters are not displayed. The project data being monitored on the GOT is preceded by "%".
(4)	Path name	Displays the path name of drive/folder which is currently displayed.
(5)	Size	Displays the size of the file displayed in [Name].
(6)	Date and time	Displays the date and time when each file is installed.
(7)	The size of drive	Displays the size in use and the entire size of the drive which is selected by drive selection. (Only the size in use is displayed when selecting the C drive.)
(8)	Operation switch	Displays the execution switch of functions (download, upload, etc.) which can be carried out in [Project information].
(9)	Number of files	Displays the total number of the displayed files.

POINT

Folders and files displayed

For the folders and files displayed, refer to the following.

☞ 14.1.4 Display file

■ Operation of project information

(1) Display operation of Project information

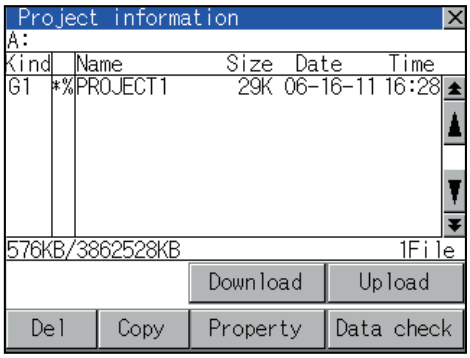

1. Touching a drive in Select drive displays the project data in the drive.
2. Touching project data selects and inverts it.
3. For operation of delete, copy, property, data check, download, upload, refer to the following.

Delete..... This section (2)
Copy..... This section (3)
Property ..... This section (4)
Data check ..... This section (5)
Download, setup ..... This section (6)
Upload, setup cancel ..... This section (7)

4. Touching [×] button closes the screen.

(2) Deletion operation

Deletes selected files.

1. Touch and select the file to delete.
2. Touching [Del] button displays the screen mentioned left.
   Confirm the deletion targeted file is specified correctly.
   Touching [OK] button deletes the file.
   Touching [Cancel] button cancels the deletion.

3. When the deletion completes, the dialog box shown left is displayed.
   Touching [OK] button closes the dialog.

(3) Copy operation

Uploads the project data written in the C drive (Flash Memory) to the A drive (Built-in SD card)/E drive (USB drive).

- Copying to another directory in the same drive
- Copying between A drive and E drive

Copy to/from C drive or copy to C drive/D drive is disabled.
(This item explains using the A drive.)

1. Install SD card in the PC, in which create a folder for the copy destination.
   Set the same character with [System Setting] of [System Environment] of GT Designer3 for the folder name.
   ☞ GT Designer3 Version1 Screen Design Manual (Fundamentals)

2. Install the SD card mentioned above to GOT.
   For inserting/removing method of SD card/USB memory, refer to the following.
   ☞ 6.1.2 Installing and removing procedures of the SD card
   6.2.2 Installing and removing procedures of the USB memory

3. Open [Project Information] screen to select the file to copy.

4. Touching [Copy] button displays the message [Please select a destination.] in the left bottom of the screen.

5. If the copy destination folder is touched, the screen display is changed to the folder of copy destination.
   At this time, it cannot be copied into the same folder where the file exists.
   Select other folders.

Dialog for selecting a copy destination folder

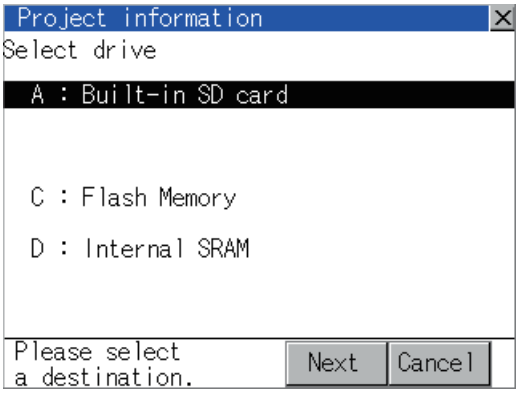

6. Touching [Exec.] button displays the dialog box shown left.

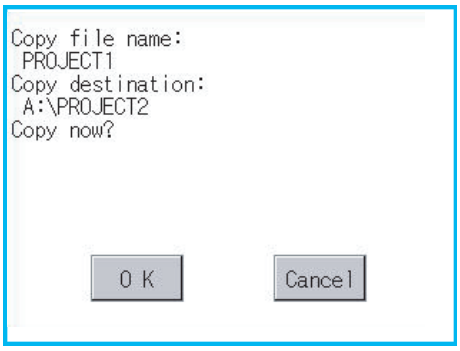

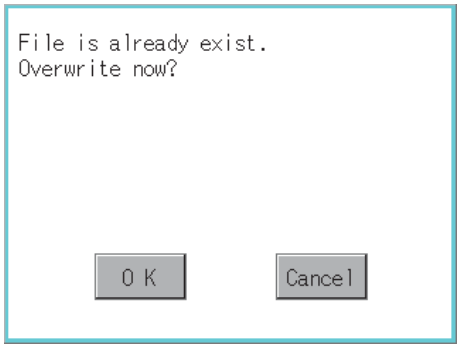

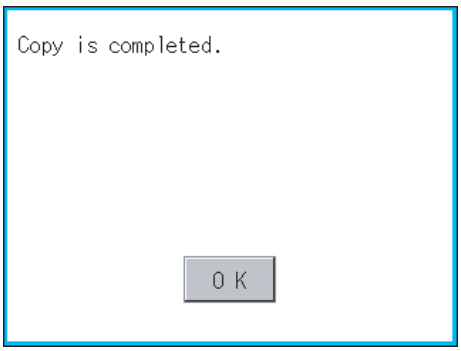

7. Touch [OK] button.
If there is no file of the same name in the copy destination folder, starts to copy.
When there is a file of the same name in the copy destination folder, the dialog mentioned left is displayed without starting the copy.
If copy, in this case, the copied file is overwritten to the project data in the copy destination folder.
Touching [OK] button starts copy.
Touching [Cancel] button cancels the copy.

8. When the copy is completed, the dialog of completion is displayed.
Touching [OK] button closes the dialog.

(4) Property display operation

Displays the property of the project data in the selected folder.

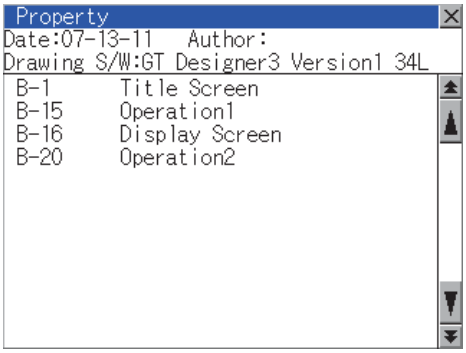

1. Touching [Property] button after selecting the project data to display the property displays the property as shown left.
In property display, the following information is displayed.

Item	Description
Date	Displays the creation date of the file.
Author	Displays the author of the project data.
Drawing S/W version	Displays name and version of the drawing software by which the project data is created.

2. Touching [▲] [▼] button scrolls up/down the screen by one line.

3. Touching [⏫] [⏬] button scrolls up/down the screen by one screen.

4. Touching [×] button closes the property display and returns to the previous screen.

(5) Data check operation

Carries out data check of the selected project file.

When data is normal.

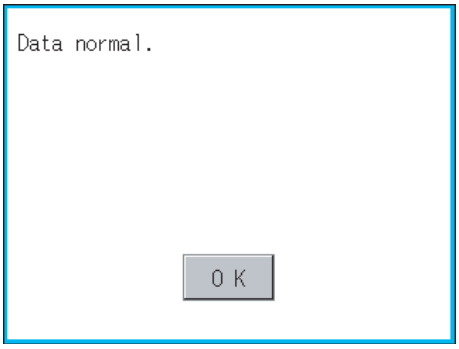

When data is erroneous.

1. Touch [Data check] button after selecting a data check target file.
   The dialog mentioned left will be displayed after executing data check.
2. Touching [OK] button closes the dialog.

(6) Download operation/setup operation

(a) Download operation

Transfers the project data stored in the A drive (Built-in SD Card) or E drive (USB drive) to the C drive (Flash Memory). (The GOT monitors using the data in the C drive.)
(This item explains using the A drive.)

POINT

Before download operation

(1) Setup cancel

When the project data in the A drive is set up, the project data cannot be downloaded to the C drive.

(2) Poject data to be stored in a SD card

When storing the project data from GT Designer3 to SD card, select [C: Built-in flash memory] for [Project Data] in the [Boot Drive].

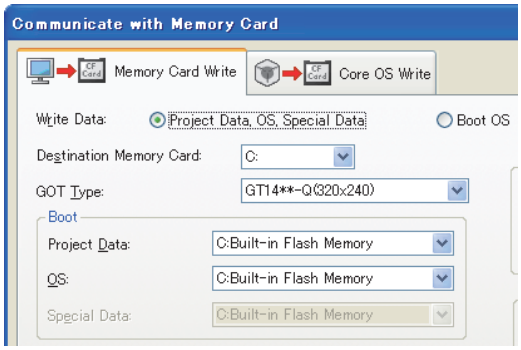

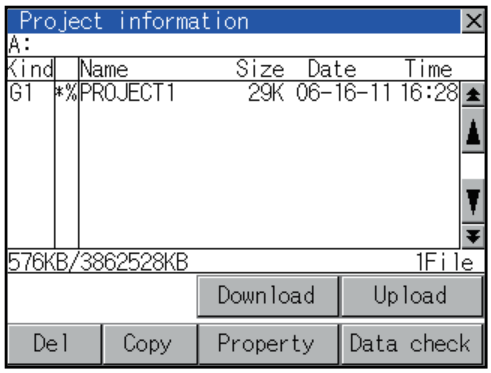

1. Mount the SD card/USB memory to GOT.

2. For the SD card installation/removal method, refer to the following.

   ☞ 6.1.2 Installing and removing procedures of the SD card
   6.2.2 Installing and removing procedures of the USB memory

3. Touch [A: Built-in SD card] of [Select drive].

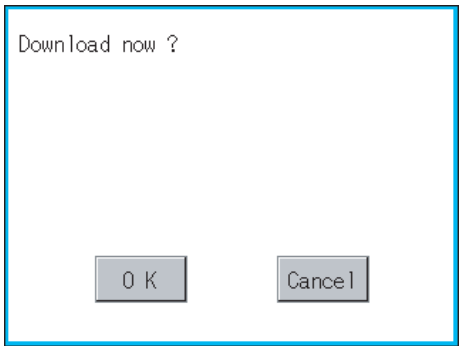

4. Touching [Download] button displays the screen shown on the left. Touching [OK] button executes the download.

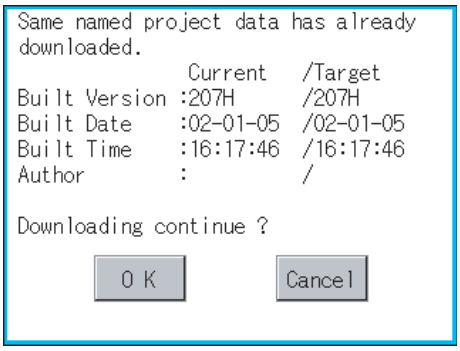

5. If there is a project data of the same name in the C drive, the screen shown on the left is displayed without starting the download.
   Touching [OK] button executes an overwrite download to the project data of the same name.
   Touching [Cancel] button cancels the download.

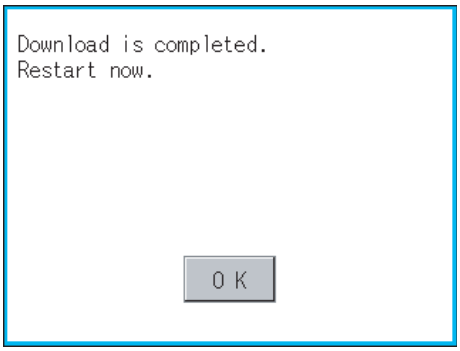

6. When the download is completed, the dialogue box shown on the left is displayed.
   Touching [OK] button restarts the GOT.

(a) Setup operation

Sets the project data stored in the A drive (Built-in SD card) to be used in the GOT.
The GOT monitors using the monitor data in the A drive.

POINT

Before setup operation

When storing project data from GT Designer3 to SD card, select [A: Standard SD Card] for [Project Data] in [Boot Drive].

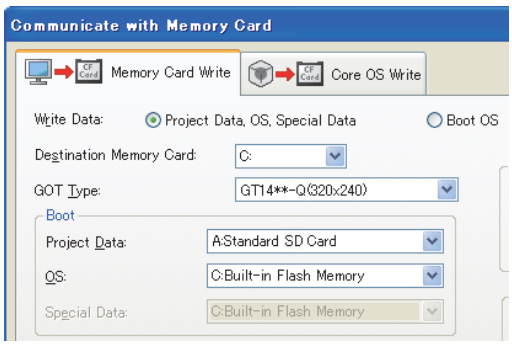

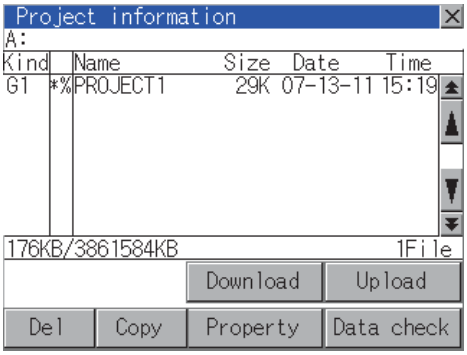

1. Mount the SD card to GOT. For the SD card installation/removal method, refer to the following.
   6.1.2 Installing and removing procedures of the SD card
2. Touch [A: Built-in SD card] of [Select drive].

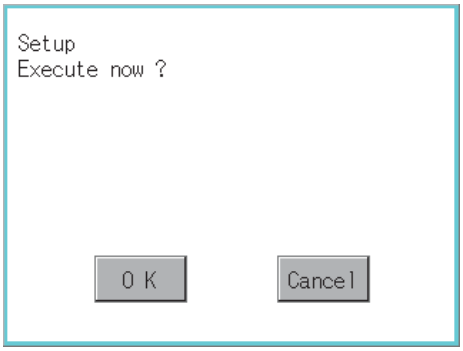

3. Touching [Download] button displays the screen shown on the left.
   Touching [OK] button executes the setup.

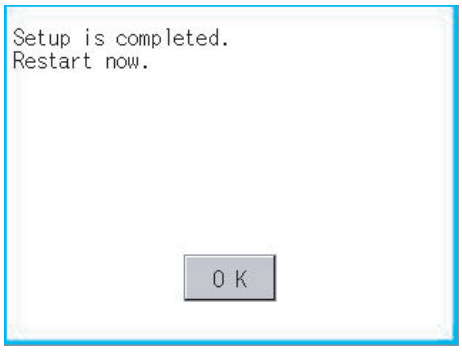

4. When the setup is completed, the dialog box mentioned left is displayed.
   Touching [OK] button restarts the GOT.

(7) Upload/setup cancel operation

(a) Upload operation

By upload operation, the project data is transferred from the C drive (Flash Memory) to the A drive (Build-in SD card) or E drive (USB drive).
The SD card or USB memory after uploading can be used for downloading project data to another GOT.
(This item explains using the A drive.)

POINT

Before upload operation

The project data cannot be uploaded to the A drive when the project data of the A drive is set up.
Execute setup cancel (☞ (7)(b) Setup cancel operation) before uploading the project data.

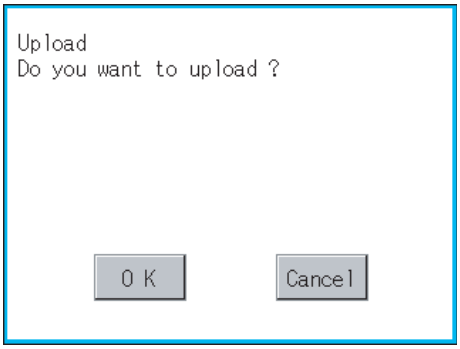

1. Touch [A: Built-in SD card] of [Select drive].
2. Touching [Upload] button displays the screen shown on the left.
3. Touching [OK] button executes the upload.

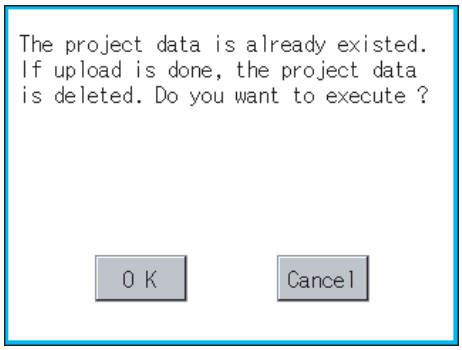

4. If there is a project data of the same name in the A drive, the screen shown on the left is displayed without starting the upload.
Touching [OK] button executes an overwrite upload to the project data of the same name.
Touching [Cancel] button cancels the upload.

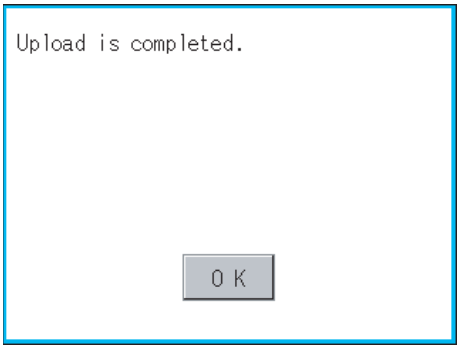

5. When the uploading is completed, the dialog box mentioned left is displayed.
Touching [OK] button restarts the GOT.

(b) Setup cancel operation
By setup cancel, setup is canceled.

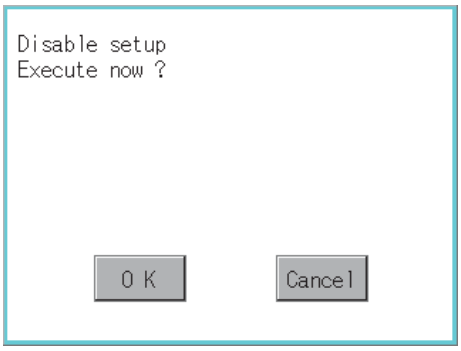

1. Touch [A: Built-in SD card] of [Select drive].
2. Touching [Upload] button displays the screen shown on the left.
3. Touching [OK] button executes the setup cancel.
4. When the setup cancel is completed, the dialog box mentioned left is displayed.
Touching [OK] button restarts the GOT.
After restart, the GOT monitors with the project data in the C drive.

14.2.4 Hard copy information

■ Function of hardcopy information

Carries out delete, copy and move to the file created by the hardcopy function.
For details of hard copy function, refer to the following manual.

☞ GT Designer3 Version1 Screen Design Manual (Functions)

Function	Description	Reference
Displaying file, folder data	The file/folder type, name, data size and creating date & time are displayed.	14-28, 14-29
Delete	File is deleted.	14-30
Copy	File is copied.	14-31
Rename	Renames file.	14-32

■ Display operation of Hardcopy information

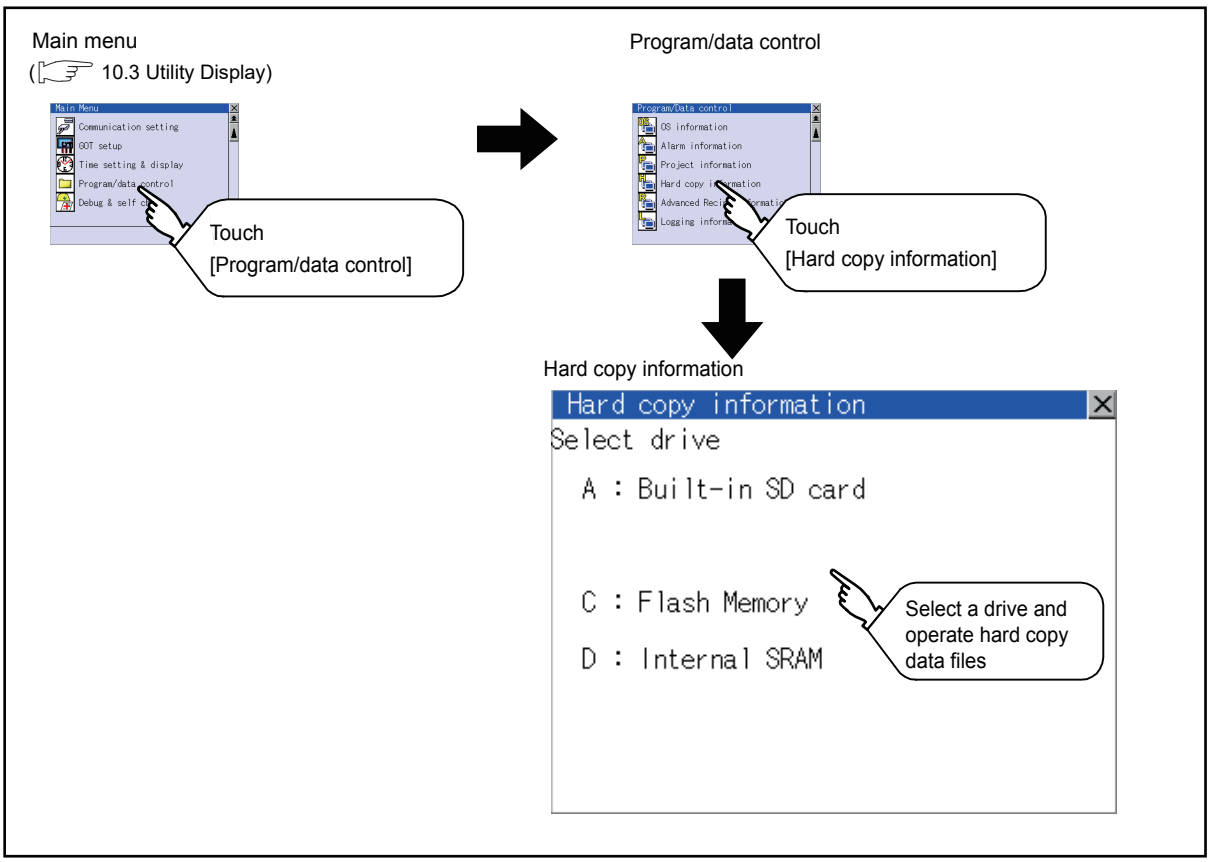

■ Display example of Hardcopy information

Hard copy information

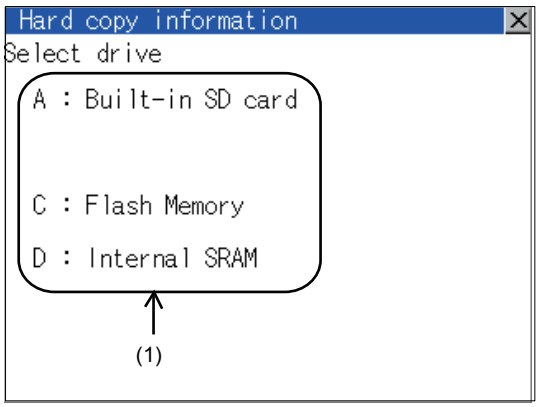

Hard copy information
Storage file/folder display screen

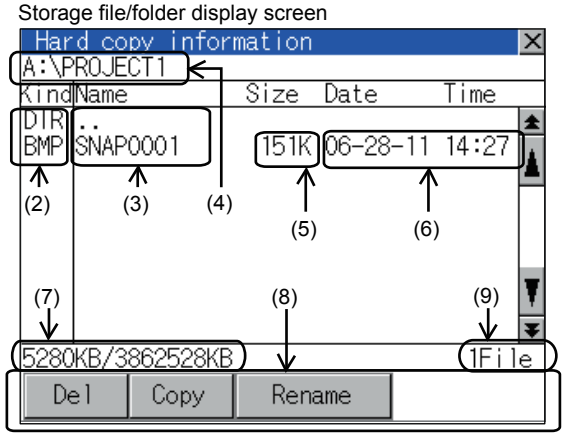

Number	Item	Description
(1)	Select drive	The target drive which displays file or folder can be selected. When SD card or USB memory is not installed, the following drives are not displayed. • SD card: [A: Built-in SD card] • USB memory: [E: USB drive]
(2)	Kind	Indicates the type of the displayed name (file or folder). In case of file, displays the extension; in case of folder, displays "DIR".
(3)	Name	Displays the file name or folder name. For the long file/folder name, entire part may not be displayed. Confirm the nondisplayed part with the [Copy] button, etc. (☞ 14.2.4 ■Hardcopy information operation (3) Copy operation) After confirmation, touch the [Cancel] button to cancel the operation.
(4)	Path name	Displays the path name of drive/folder which is currently displayed.
(5)	Size	Displays the size of the file displayed in [Name].
(6)	Date and time	The date and time when each file was created are displayed.
(7)	The size of drive	Displays the size in use and the entire size of the drive which is selected by drive selection. (Only the size in use is displayed when selecting the C drive.)
(8)	Operation switch	Execution switch of each function.
(9)	Number of files	Displays the total number of the displayed files.

POINT

(1) Display of creation date and time
The creation date and time display is not updated even if a file is created or updated while displaying the hardcopy information. To display the updated creation date and time, close the screen currently displayed (by moving to the upper hierarchy folder, etc.) and display the screen again.

(2) Folders and files displayed
For the folders and files displayed, refer to the following.

☞ 14.1.4 Display file

■ Hardcopy information operation

(1) Display operation of Hardcopy information

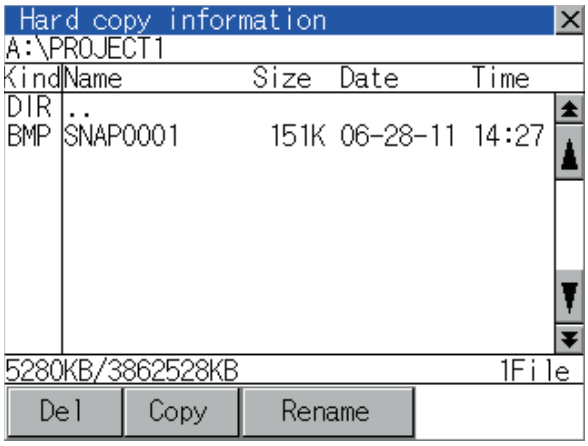

1. Touching a drive of [Select drive] displays the information of the touched drive.
2. Touching a folder name displays the information of the touched folder.
3. Touching a folder of [. .] displays the information of the folder of the one upper hierarchy.
4. Touching ▲ ▼ button of the scrollbar scrolls up/down the screen by one line.
   Touching ⏫ ⏬ button scrolls up/down the screen by one screen.
5. Touching a file name selects the file.
6. For the operations of the delete, copy, and rename, refer to the following.

   Delete ..... ☞ This section (2)
   Copy ..... ☞ This section (3)
   Rename ..... ☞ This section (4)
7. Touching [×] button closes the screen.

(2) Deletion operation
Deletes selected files.

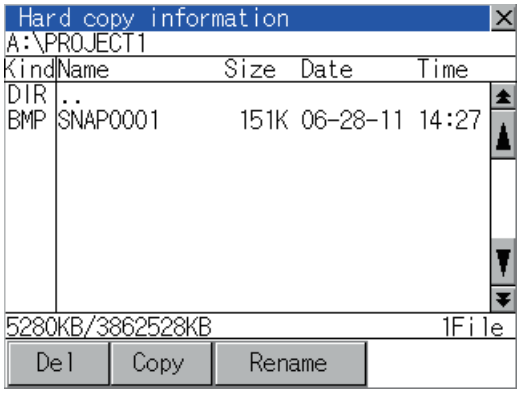

1. Touch and select the file to delete.

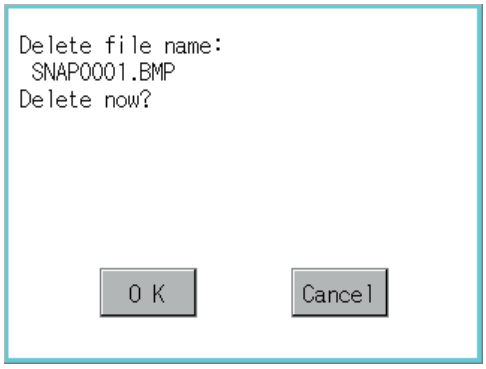

2. Touching [Del] button displays the screen mentioned left.
Touching [OK] button deletes the file.
Touching [Cancel] button cancels the deletion.

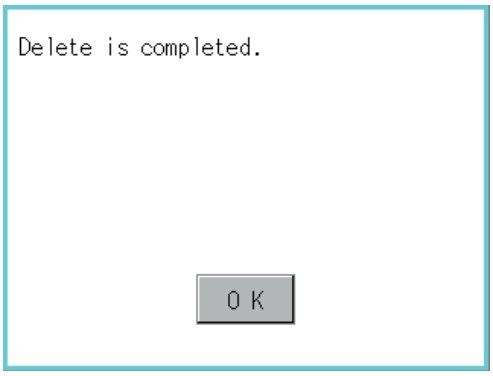

3. When the deletion is completed, the completion dialog is displayed.

4. Touching [OK] button closes the dialog.

(3) Copy operation

Copies the selected file.

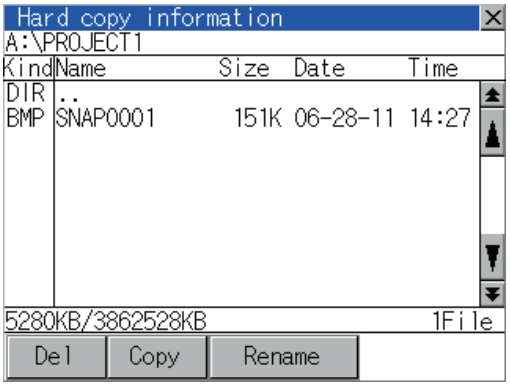

1. Touch and select the file to copy.

2. Touching [Copy] button displays the message [Please select a destination.] in the left bottom of the screen.

3. If the copy destination folder is touched, the screen display is changed to the folder of copy destination. At this time, it cannot be copied into the same folder where the file exists.
Select other folders.

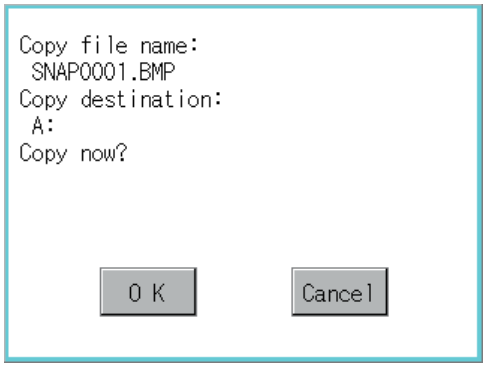

4. Touching [Exec.] button displays the dialog box shown left.

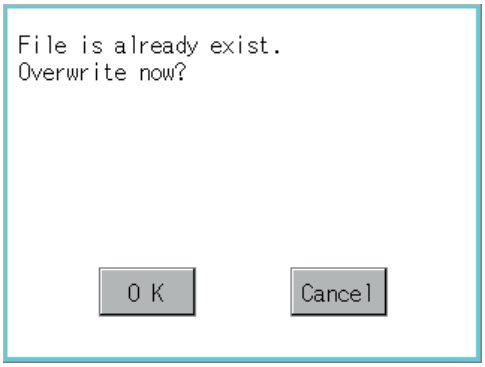

5. Touch [OK] button.
If there is a file of the same name in the copy destination folder, the following dialog is displayed without starting the copy.

6. Touching [OK] button overwrites the file.
Touching [Cancel] button cancels the copy.

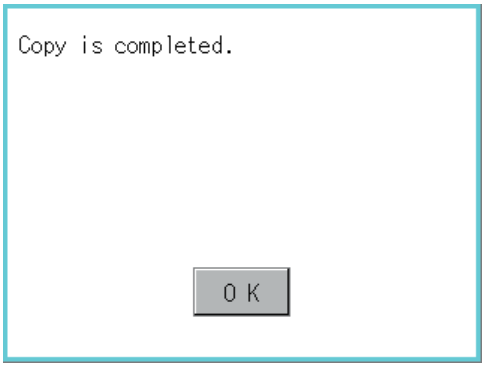

7. When the copy is completed, the dialog of completion is displayed.
Touching [OK] button closes the dialog.

(4) Rename operation
Renames the selected file.

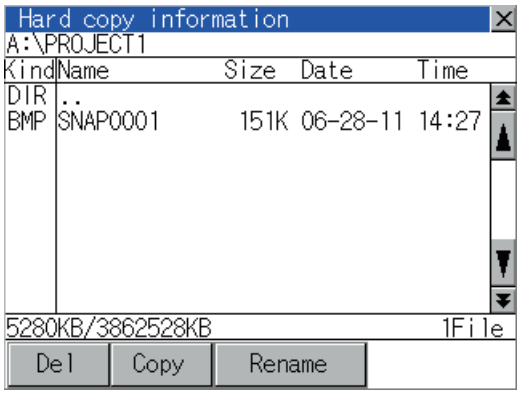

1. Touch and select the file to change the name.

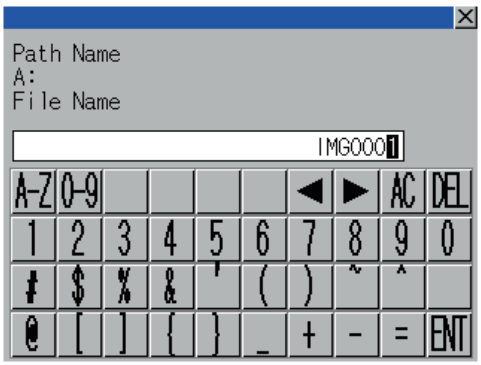

2. Touching [Rename] button displays the screen shown left. Input the file name to be changed.
By touching the following button, input text type is changed.

[A-Z]: English capital
[0-9]: Numeric/Symbol

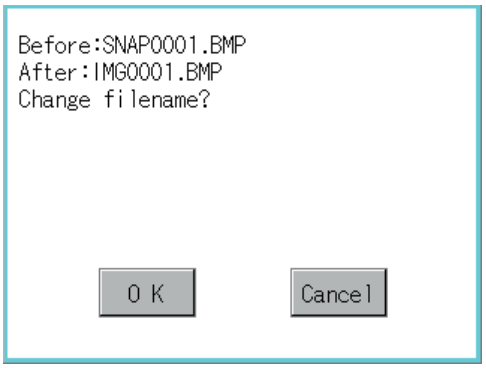

3. Touching [Enter] button displays the dialog box shown left.

4. Touching [OK] button starts renaming file.

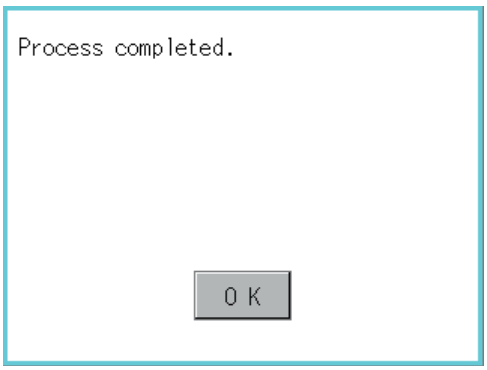

5. When renaming is completed, completion dialog box is displayed.
Touching [OK] button closes the dialog.

14.2.5 Advanced recipe information

POINT

Before using advanced recipe information

For writing/reading into/from a controller with this function or editing of advanced recipe file on the personal computer, refer to the following manual.
Specifications and operating procedure are described.

☞ GT Designer3 Version1 Screen Design Manual (Functions)

■ Function of advanced recipe information

For the advanced recipe file used in advanced recipe function, copy/delete/file output are available.
In addition, it is possible to writing/reading into/from a controller by using this function, without creating the screen to operate the advanced recipe. (Advanced recipe setting of GT Designer3 is required.)

Function		Description	Reference
Advanced recipe information screen	Displaying file, folder data	The file/folder name, data size and creating date & time are displayed.	14-35, 14-37
	G1P → CSV conversion	G1P file of advanced recipe file is converted to CSV file.	14-38
	G1P → TXT conversion	G1P file of advanced recipe file is converted to Unicode text file.	14-38
	CSV/TXT → G1P conversion	CSV file or Unicode text file is converted to G1P file of advanced recipe file.	14-39
	Del	File or folder is deleted.	14-40
	Copy	File is copied.	14-41
	Move	File is moved.	14-42
	Rename	File name is changed.	14-43
	Create Folder	New folder is created.	14-44
	Create G1P	New G1P file of advanced recipe file is created.	14-45
Advanced recipe record list screen	Load record GOT → PLC	Selected record value is loaded in the device of controller.	14-47
	Save record PLC → GOT	The device of controller is saved in selected record.	14-48
	Match records GOT → PLC	Selected record is verified to the device value of controller.	14-49
	Delete Device Value	The device value contained in selected record is deleted.	14-50

■ Display operation of Advanced Recipe information

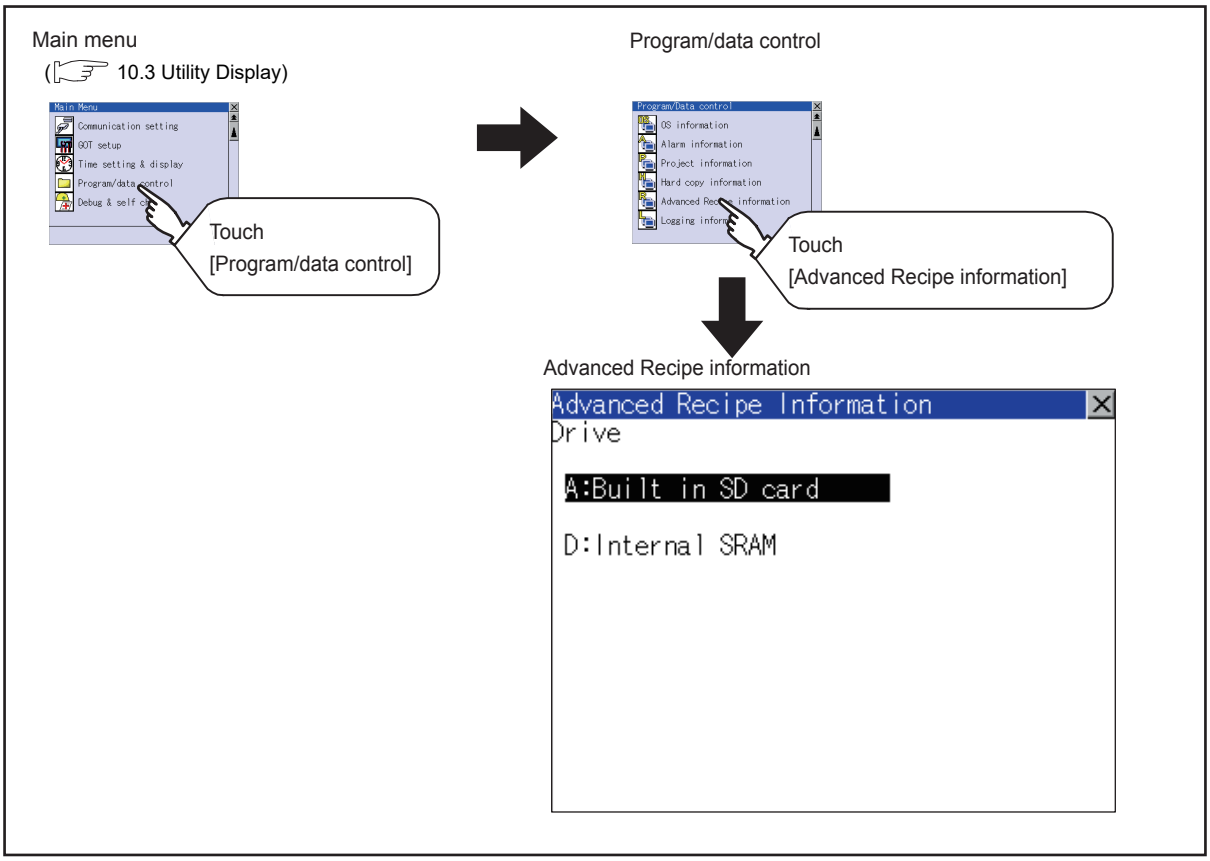

■ Display example of Advanced Recipe information

(1) Advanced recipe information screen

Advanced Recipe Information screen

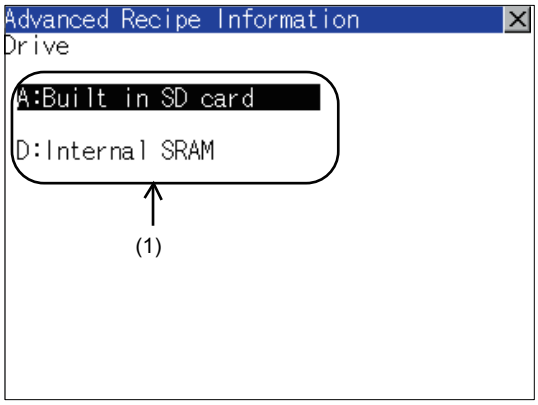

Advanced Recipe Information
Storage file/folder display screen

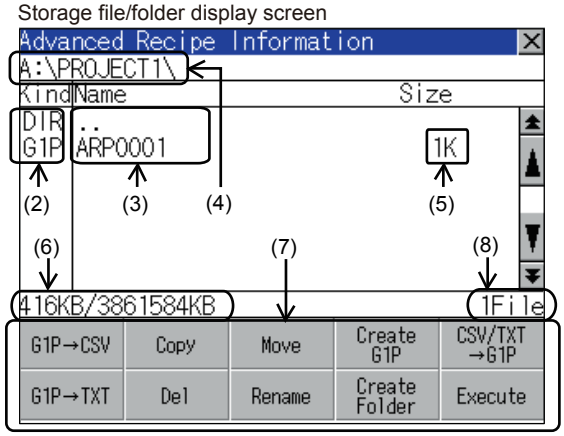

Number	Item	Description
(1)	Select drive	The target drive can be selected. (Even if SD card is not installed, this message appears.)
(2)	Kind	Indicates the type of the displayed name (file or folder). In case of file, displays the extension; in case of folder, displays "DIR".
(3)	Name	Displays the file name or folder name. For the long file/folder name, entire part may not be displayed. Confirm the nondisplayed part with the [Rename] button, etc. (☞ 14.2.5 ■Advanced recipe information operation(7) Rename operation) After confirmation, touch the [Cancel] button to cancel the operation.
(4)	Path name	Displays the path name of drive/folder which is currently displayed.
(5)	Size	Displays the size of the file displayed in [Name].
(6)	The size of drive	Displays the size in use and the entire size of the drive which is selected by drive selection.
(7)	Operation switch	Execution switch of each function.
(8)	Number of files	Displays the total number of the displayed files.

POINT

(1) About the displayed file
The files other than that for advanced recipe are not displayed on the advanced recipe information screen.

(2) Folders and files displayed
For the folders and files displayed, refer to the following.

☞ 14.1.4 Display file

(2) Advanced recipe record list screen

Touching the [Execute] button on the advanced recipe information screen after selecting the advanced recipe file, this screen appears.

Records selected in each advanced recipe file can be displayed or saved/loaded.

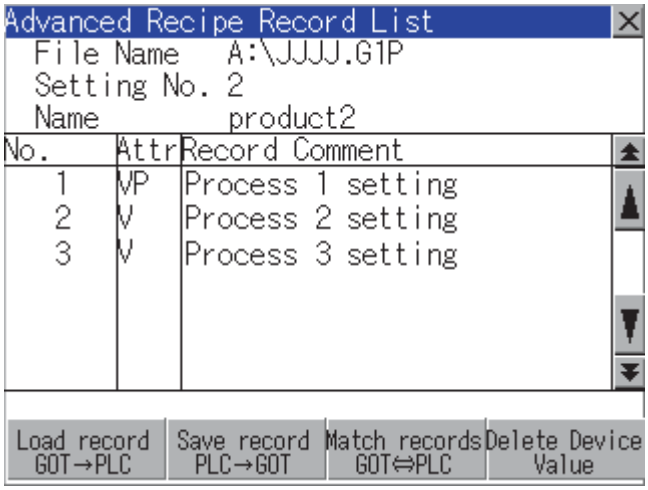

Number	Item	Description
(1)	No.	Record No. of advanced recipe file is displayed.
(2)	Attr	Attribution of record is displayed. Attribution of record can be changed with GT Designer3. V: Record can be loaded/saved (Record whose value is selected.) VP: Record only for loading (Record whose value is selected and cannot be changed.) Blank: Record only for saving (Record whose value is deleted or not selected.) P: Record unusable (reserved area) (Record whose value is not selected and cannot be changed.)
(3)	Record Comment	Record Comment is displayed.
(4)	File Name	Path and name of recipe file are displayed.
	Setting No.	Recipe No. is displayed.
	Name	Recipe name is displayed.
(5)	Operation switch	Execution switch of each function.

■ Advanced recipe information operation

(1) Display operation of Advanced Recipe information

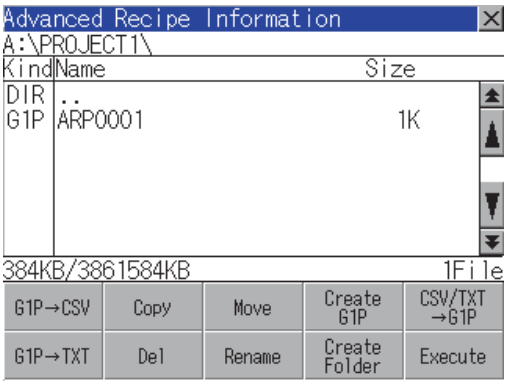

1. Touching a drive of [Select drive] displays the information of the touched drive.
2. Touching a folder name displays the information of the touched folder.
3. Touching a folder name of [. .] displays the information of the folder in one upper hierarchy.
4. Touching ▲ ▼ button of the scrollbar scrolls up/down the screen by one line.
   Touching ⏫ ⏬ button scrolls up/down the screen by one screen.
5. Touching a file name selects the file.
6. For operation of operating switches, refer to the following.
   G1P → CSV, G1P → TXT
   ..... ☞ This section (2)
   CSV/TXT → G1P..... ☞ This section (3)
   Delete..... ☞ This section (4)
   Copy..... ☞ This section (5)
   Move ..... ☞ This section (6)
   Rename ..... ☞ This section (7)
   Create Folder ..... ☞ This section (8)
   Create G1P ..... ☞ This section (9)
   Execute ..... ☞ This section (10) to (13)
7. Touching [×] button closes the screen.

(2) G1P → CSV conversion operation, G1P → TXT conversion operation

Advanced recipe file (G1P file) is converted to CSV file or Unicode text file that can be displayed/edited on personal computer.

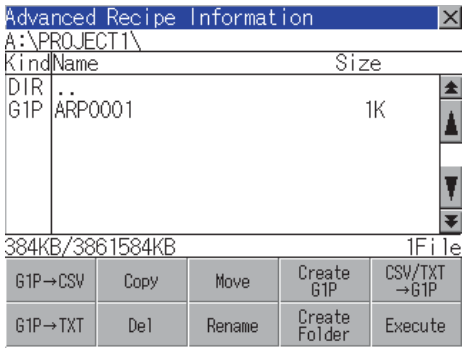

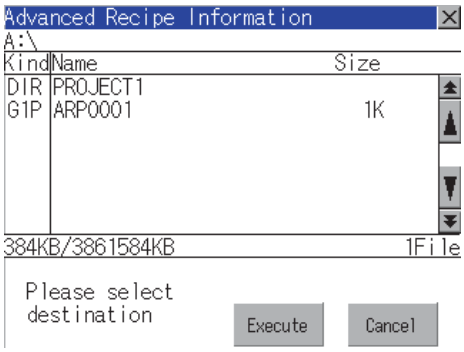

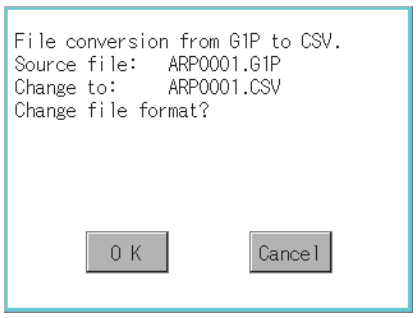

(Example: Dialog box if the [G1P → CSV] button is touched.)

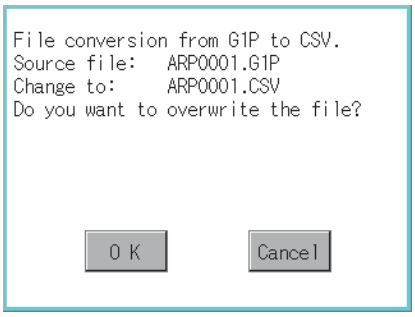

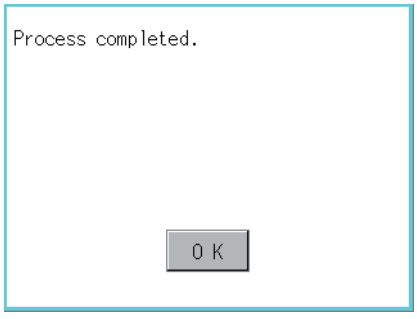

1. Touch and select the G1P file to convert into a CSV file or a Unicode text file.

2. Touch the following button in accordance with destination file type.
   - CSV file: [G1P → CSV] button
   - Unicode text file: [G1P → TXT] button

3. Select the target folder.
   (Selecting a folder is not needed for outputting directly below the drive.)

4. Touching [Exec.] button displays the dialog box shown left.
   Touch [OK] button.
   (While executing, "Processing..."message appears on the screen.)

5. When the file, whose name is the same, exists in the destination folder, the dialog box shown at left appears without starting the conversion.
   Touching [OK] button overwrites the file.
   Touching [Cancel] button cancels the conversion.

6. The message of completion is displayed in dialog box when conversion is completed.
   Touching [OK] button closes the dialog.

(3) CSV/TXT → G1P conversion operation

CSV file or Unicode text file is converted to an advanced recipe file (G1P file).

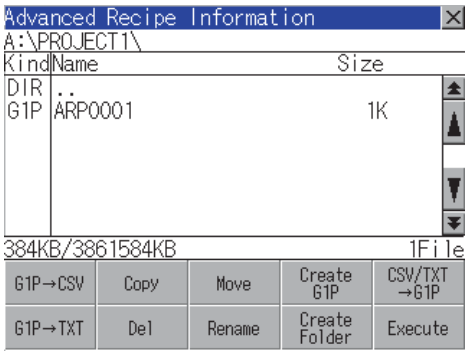

1. To select the file, touch the check box of CSV file or Unicode text file to be converted to a G1P file.

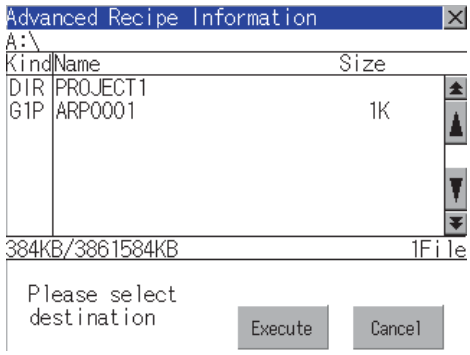

2. Select the target folder.
(Selecting a folder is not needed for outputting directly below the drive.)

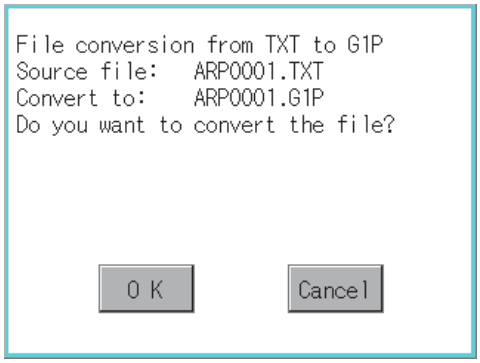

3. Touching [Exec.] button displays the dialog box shown left.
Touch [OK] button.
(While executing, "Processing..."message appears on the screen.)

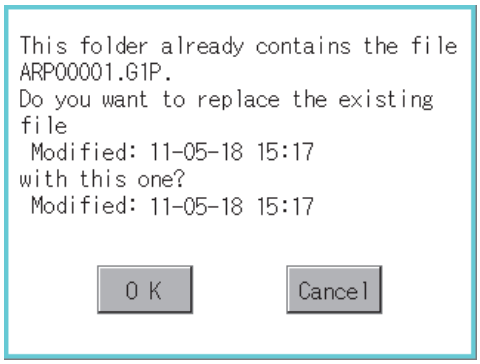

4. When the file, whose name is the same, exists in the destination folder, the dialog box shown at left appears without starting the conversion.
Touching [OK] button overwrites the file.
Touching [Cancel] button cancels the conversion.

5. The message of completion is displayed in dialog box when conversion is completed.
Touching [OK] button closes the dialog.

(4) Deletion operation

Folder and file to be used on advanced recipe are deleted.

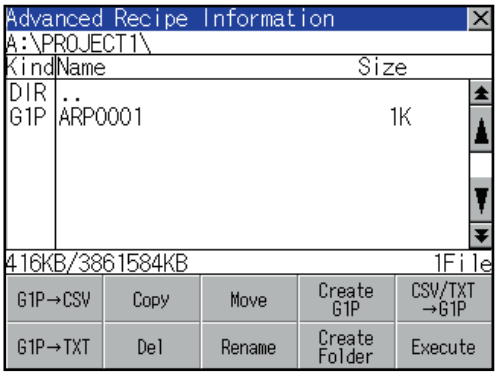

1. Touch and select the file/folder to delete.

2. Touching [Del] button displays the dialog mentioned left.
Touching [OK] button deletes the file/folder.
(While executing, "Processing..."message appears on the screen.)
Touching [Cancel] button cancels the deletion.

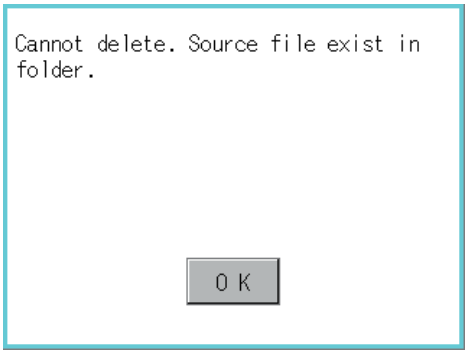

When it cannot be deleted, the dialog box shown at left appears. (Only when deleting folder is executed.)
Verify that there is no file in the folder and execute the delete operation again.
(☞ 14.2.6 ■Precautions)

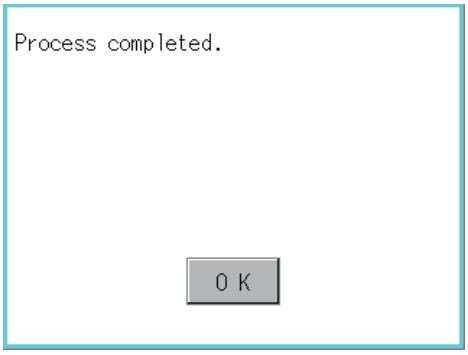

3. When the deletion is completed, the completion dialog is displayed.
Touching [OK] button closes the dialog.

(5) Copy operation

Folder to be used in advanced recipe is copied.

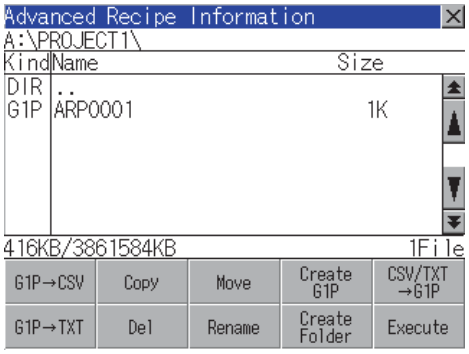

1. Touch and select the file to copy.
2. Touch the [Copy] button.

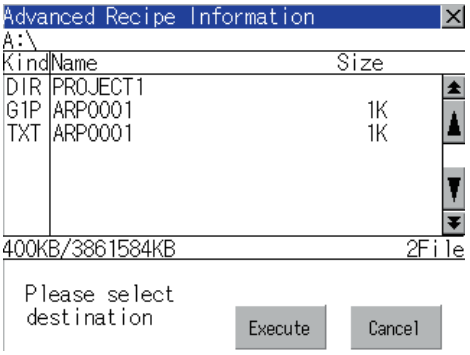

3. Select the target folder.
(Selecting a folder is not needed for outputting directly below the drive.)
At this time, it cannot be copied into the same folder where the file exists.
Select other folders.

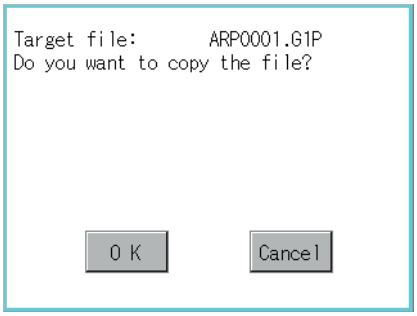

4. Touching [Execute] button displays the dialog box shown left.
Touch [OK] button.
(While executing, "Processing..."message appears on the screen.)

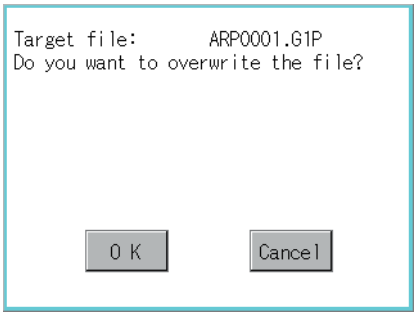

5. If there is a file of the same name in the copy destination folder, the following dialog is displayed without starting the copy.
Touching [OK] button overwrites the file.
Touching [Cancel] button cancels the copy.

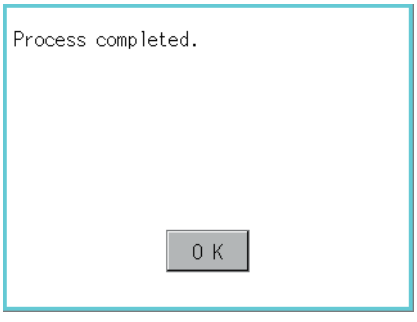

6. When the copy is completed, the dialog of completion is displayed.
Touching [OK] button closes the dialog.

(6) Move operation

Files to be used in advanced recipe are moved.

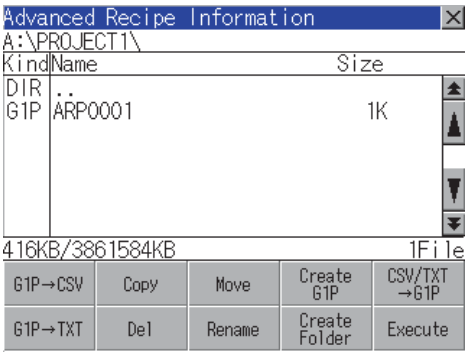

1. Touch and select the file to move.
2. Touch the [Move] button.

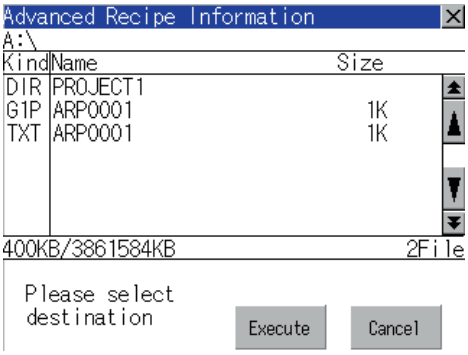

3. Select the target folder.
(Selecting a folder is not needed for moving directly below the drive.)

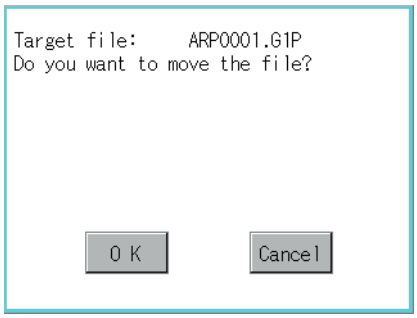

4. Touching [Execute] button displays the dialog box shown left.
Touch [OK] button.
(While executing, "Processing..."message appears on the screen.)

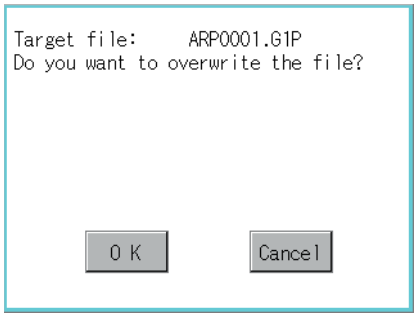

5. When any file with the same name exists in the destination folder, the dialog box shown left appears without starting the movement.
Touching the [OK] button overwrites the file.
Touching [Cancel] button cancels moving.

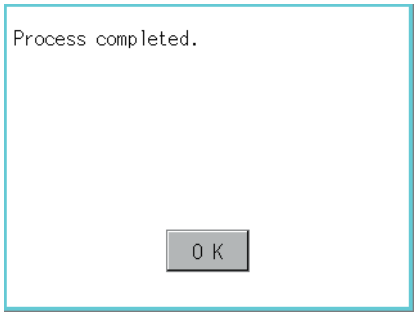

6. When moving is completed, completion dialog box is displayed.
Touching [OK] button closes the dialog.

(7) Rename operation

File name to be used in advanced recipe is changed.

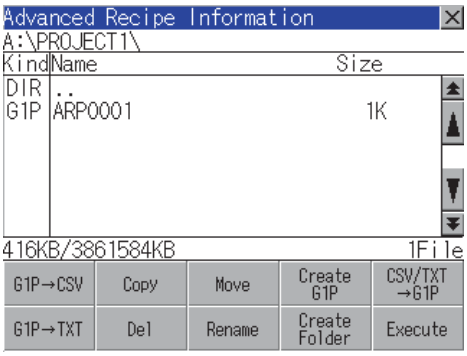

1. Touch and select the file to change the name.

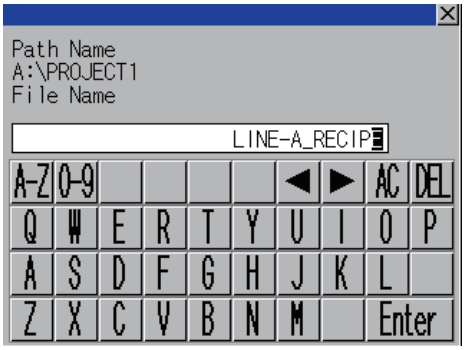

2. Touching [Rename] button displays the screen shown left. Input the file name to be changed.
By touching the following button, input text type is changed.

[A-Z]: English capital
[0-9]: Numeric/Symbol

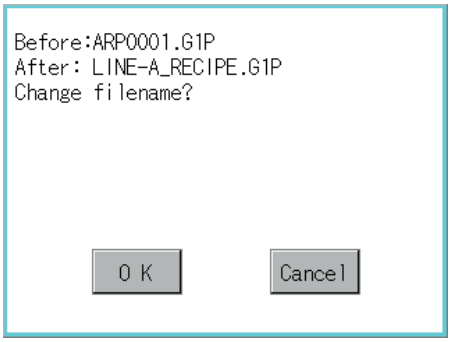

3. Touching [Enter] button displays the dialog box shown left.

4. Touching [OK] button starts renaming file.
(While executing, "Processing..."message appears on the screen.)

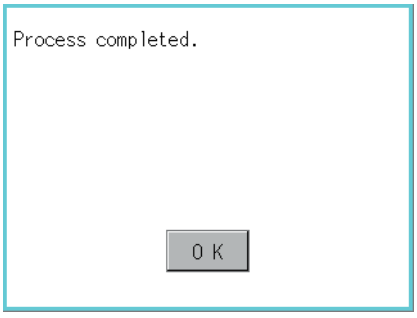

5. When renaming is completed, completion dialog box is displayed.
Touching [OK] button closes the dialog.

(8) Folder create operation

Folder to be used in advanced recipe is created.

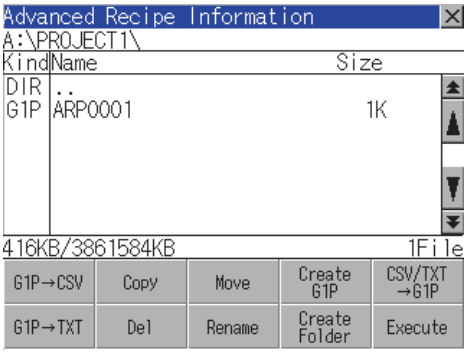

1. Touch the [Create Folder] button.

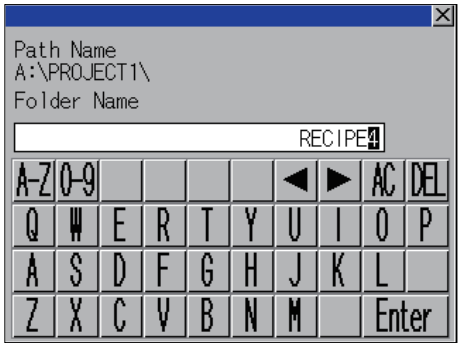

2. The input key window shown left appears, then input the file name to be created.
By touching the following button, input text type is changed.
[A-Z]: English capital
[0-9]: Numeric/Symbol

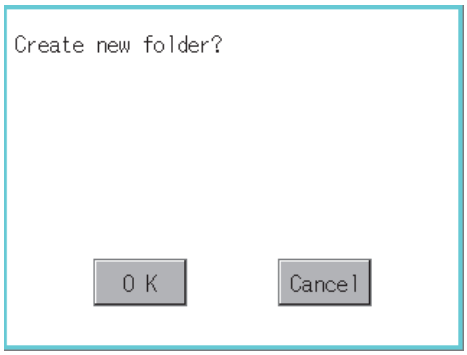

3. Touching [Enter] button displays the dialog box shown left.

4. Touching [OK] button starts creating folder.

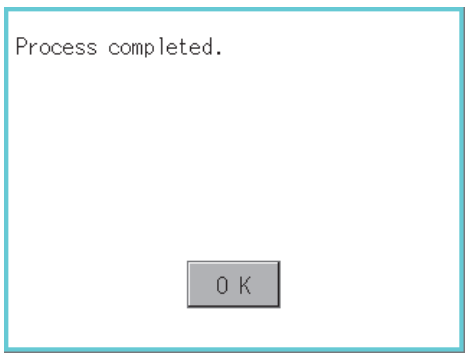

5. When creating folder is completed, completion dialog box is displayed.
Touching [OK] button closes the dialog.

(9) G1P file create operation

Advanced recipe file (G1P file) is created.

When advanced recipe is only executed on Utility, advanced recipe file should be created with this function in advance.

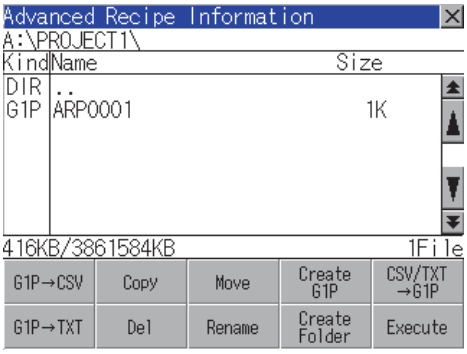

1. Touch the [Create G1P] button.

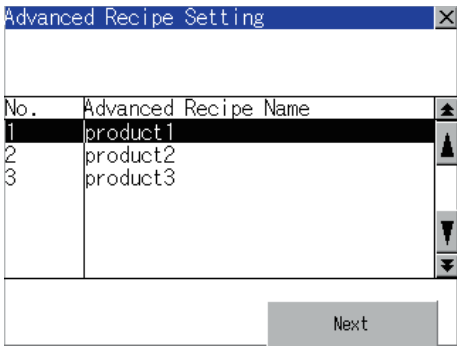

2. The screen to select the advanced recipe setting is displayed.
Select the advanced recipe setting to be used for new file.
After selecting, touch the [Next] button.

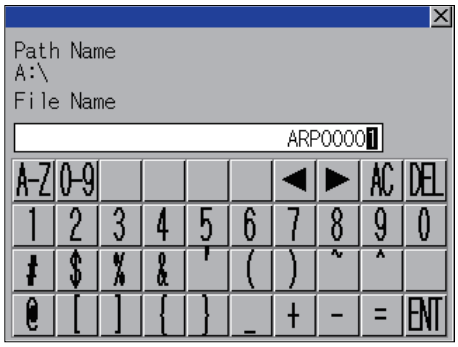

3. As the input key window is displayed, input the file name for new file.
By touching the following button, input text type is changed.
[A-Z]: English capital
[0-9]: Numeric/Symbol

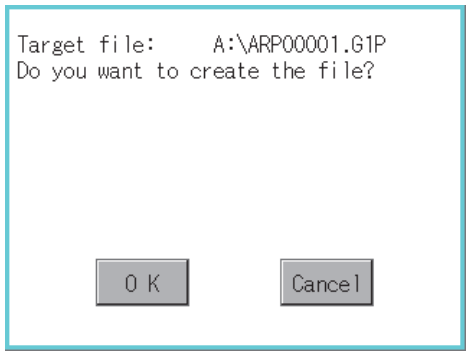

4. Touching [Enter] button displays the dialog box shown left.
Touch [OK] button.

(Continued to next page)

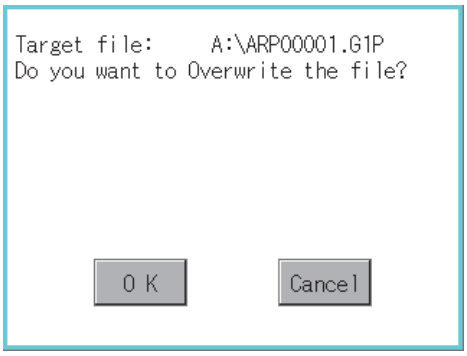

5. When the file, whose name is the same, exists in the destination folder, the dialog box shown left appears without starting the creation.
Touching the [OK] button overwrites the file.
Touching [Cancel] button cancels creating.

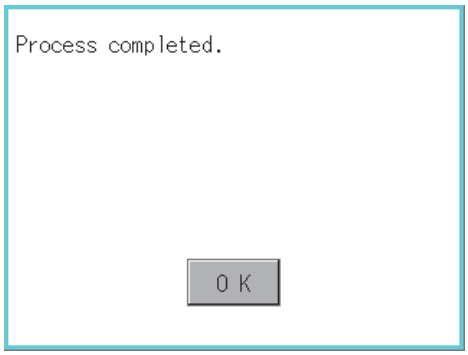

6. When creating is completed, completion dialog box is displayed.
Touching [OK] button closes the dialog.

(10) Record load operation

Selected record value is loaded in the device of controller.

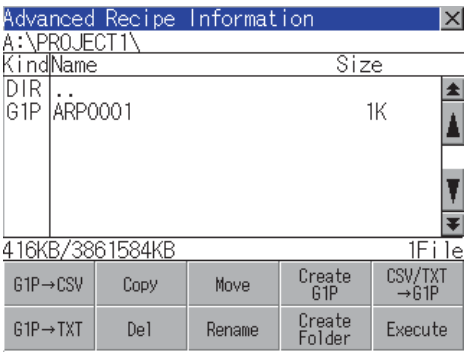

1. Select the recipe file and touch the [Execute] button.

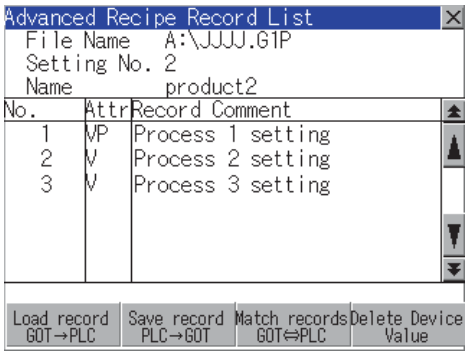

2. As the Advanced Recipe Record List screen is displayed, select the record comment to which you want to load the device value.

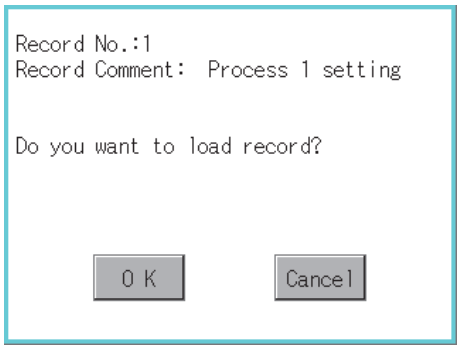

3. Touching the [Load record GOT → PLC] button displays the dialog box shown left.

4. Touching the [OK] button starts loading record.

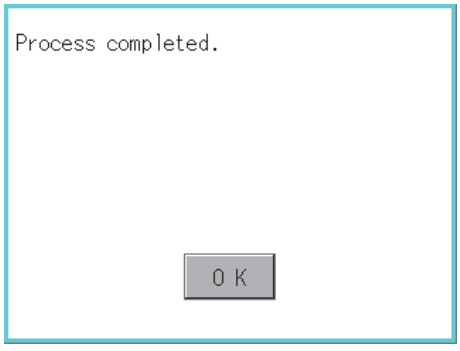

5. When loading is completed, completion dialog box is displayed.
Touching [OK] button closes the dialog.

(11) Record save operation

Device value of a controller is saved in the selected record.

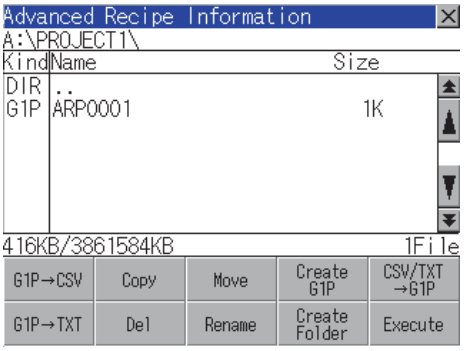

1. Select the recipe file and touch the [Execute] button.

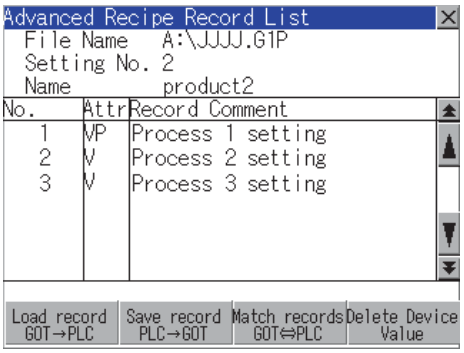

2. As the Advanced Recipe Record List screen is displayed, select the record comment for saving the device value.

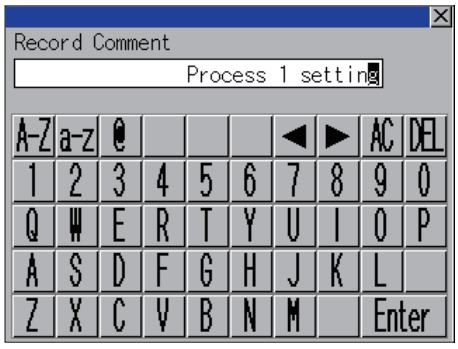

3. Touching the [Save record PLC → GOT] button displays the screen shown left.
For changing the record comment of saving destination, input the record comment.
By touching the following button, input text type is changed.
[A-Z]: English capital
[a-z]: English minuscule
[0-9]: Numeric/Symbol
Other than alphanumeric and symbol can not be inputted.
If record comment is not changed, it is not need to input.

4. Touching [Enter] button displays the dialog box shown left.

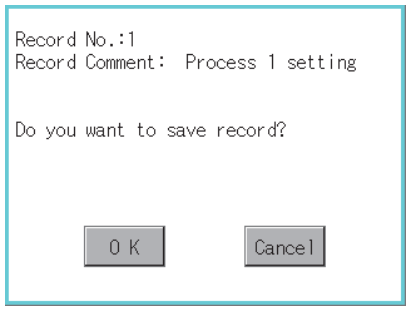

5. Touching the [OK] button starts saving record.

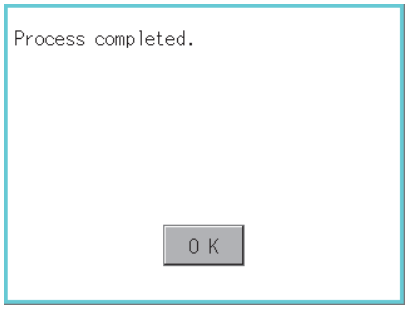

6. When saving is completed, completion dialog box is displayed.
Touching [OK] button closes the dialog.

(12) Record match operation

Verifies weather selected record matches to the device value of the controller.

After executing loading/saving with advanced recipe, verifies weather its contents are reflected.

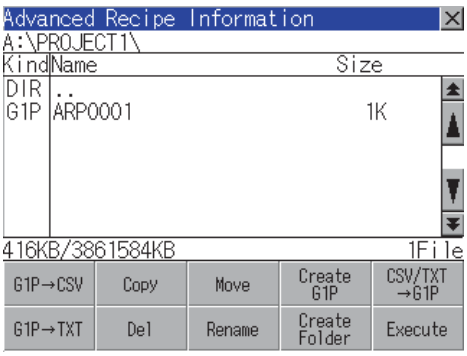

1. Select the recipe file and touch the [Execute] button.

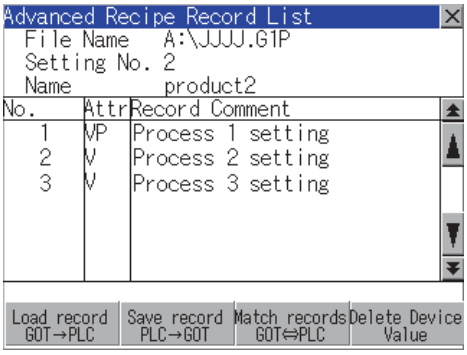

2. As the Advanced Recipe Record List screen is displayed, select the record comment for matching the device value.

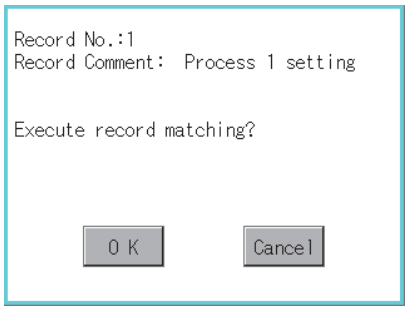

3. Touching the [Match records GOT → PLC] button displays the dialog box shown left.

4. Touching the [OK] button starts matching record.

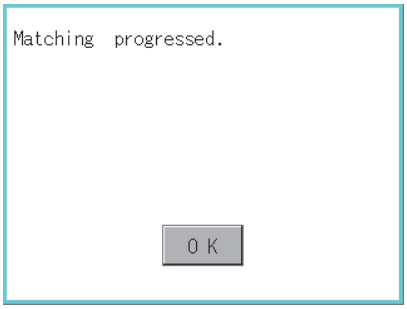

5. When matching is completed, completion dialog box is displayed.
Touching [OK] button closes the dialog.

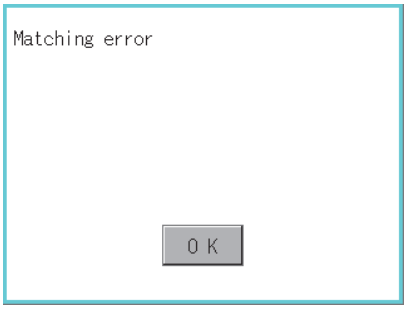

6. If selected record does not match to the device value of controller, the dialog box shown left is displayed.

(13) Device value delete operation

The device value of selected record is deleted (without value) and changed to record only for reading. (The record name is not deleted.)

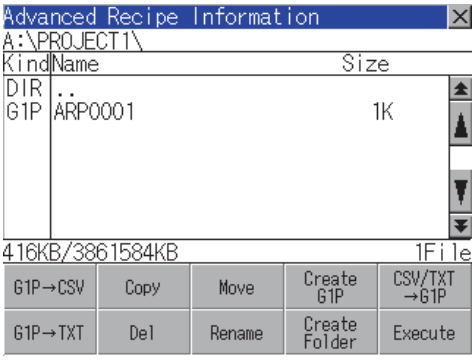

1. Select the recipe file and touch the [Execute] button.

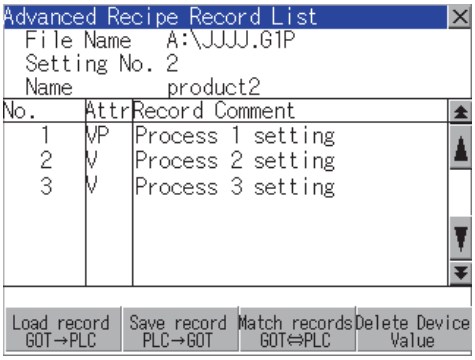

2. As the Advanced Recipe Record List screen is displayed, select the record comment to be deleted.
(If the data of which attribution contains "P" can not be deleted.)

3. Touching the [Delete Device Value] button displays the dialog box shown left.

4. Touching the [OK] button starts deleting device value.
(The "Processing..." message is displayed on the screen.)

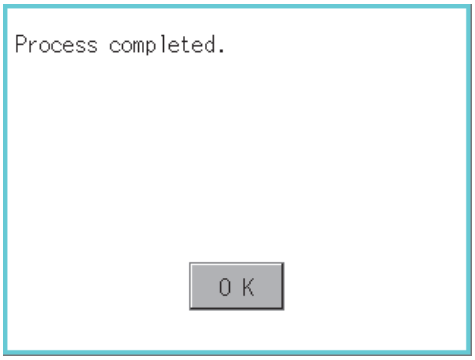

5. When deleting is completed, completion dialog box is displayed.
Touching [OK] button closes the dialog.

■ Precautions

(1) When creating folder/file

(a) Number of characters set for folder or file name when creating folder/file.
GOT recognizes file location according to path explained below.
Specify folder or file name, and total characters of path cannot exceed 78 characters.
Users only can rename folder or file name.
(Other than folder/file name is automatically printed.)

Example: CSV file Path in SD card or USB memory

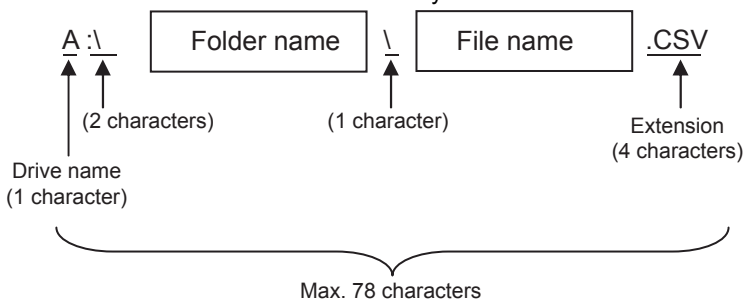

POINT

If folder is assigned the hierarchy.

The \ mark is displayed between folder name and folder name, folder name and file name. The \ mark is also counted as one character.

(b) Character strings that cannot be set to folder/file
The following character strings cannot be used as a folder name or a file name. Even small characters of those cannot be used.

- COM1 to COM9
- LPT1 to LPT9
- AUX
- CON
- NUL
- PRN
- CLOCK$

In addition, the folder/file name shown below cannot be used.

- The folder name which begins with G1.
- Folder name and file name which begin with. (period).
- Folder name and file name which finish with. (period).
- Folder name and file name which have only. (one period) or .. (two periods).

(c) For deleting the folder
The folder in which the file exists cannot be deleted.
Delete the folder after having deleted the files.
In addition, on the advanced recipe information screen, the file other than that for advanced recipe is not displayed on GOT.
When the folder, in which there is no file displayed on the screen, cannot be deleted, confirm whether there is other file in SD card or USB memory by using personal computer, etc.

(2) Precautions for operation

(a) Precautions during folder/file operation (Create/Delete/Copy/File output, etc)
Even if SD card access switch has been turned OFF while GOT is processing folders and files, the processing continues to be executed. (Example: Even if SD card access switch has been turned OFF while GOT is creating a folder, the folder is created.)
Therefore, do not pull out the SD card while the "Processing..." message is on the screen after SD card access switch has been turned OFF.

(b) While GOT is accessing to other file (Alarm data, etc)
When folder/file processing for the recipe is executed while the GOT is in access to other file (SD card access LED ON), the GOT executes folder/file processing for the Advanced Recipe after the processing for other file has completed.
Therefore, it may take some time to finish the process of advanced recipe folder/file. (The "Processing..." message is displayed on the screen.)

POINT

Estimation of processing time

The process may take time depending on the setting of advanced recipe file to be operated. (The more number of blocks increases, the longer it takes to process advanced recipe folder/file.)
Also, the process to create the first file may take time depending on the setting of advanced recipe file.

(Reference value)
Direct connection to QCPU and CPU (device point:32767 points setting, transmission speed: 115200 bps)
- When the block setting number to 1: about 17 seconds
- When the block setting number to 2048: about 4 minutes

(c) For executing the saving/loading of device value with advanced recipe file which has been moved or whose name has been changed.
Adjust [Recipe File] setting of advanced recipe setting with GT Designer3 to file which has been moved or whose name has been changed.
After the setting has been changed, download the advanced recipe setting to GOT.

14.2.6 Logging information

■ Function of logging information

Logging files created with the logging function can be copied, deleted or renamed, etc.
Without using a PC, you can manage logging files on the GOT.

For details of the logging function, refer to the following manual.

☞ GT Designer3 Version1 Screen Design Manual (Functions)

Function	Description	Reference
Displaying file, folder data	The file/folder name, data size and creating date & time are displayed.	14-54, 14-55
G1L→CSV conversion	G1L file of loggingfile is converted to CSV file.	14-56
G1L→TXT conversion	G1L file of loggingfile is converted to Unicode text file.	14-56
Del	File or folder is deleted.	14-57
Copy	File is copied.	14-58
Move	File is moved.	14-59
Rename	File name is changed.	14-60
Create Folder	New folder is created.	14-61

■ Display operation of Logging information

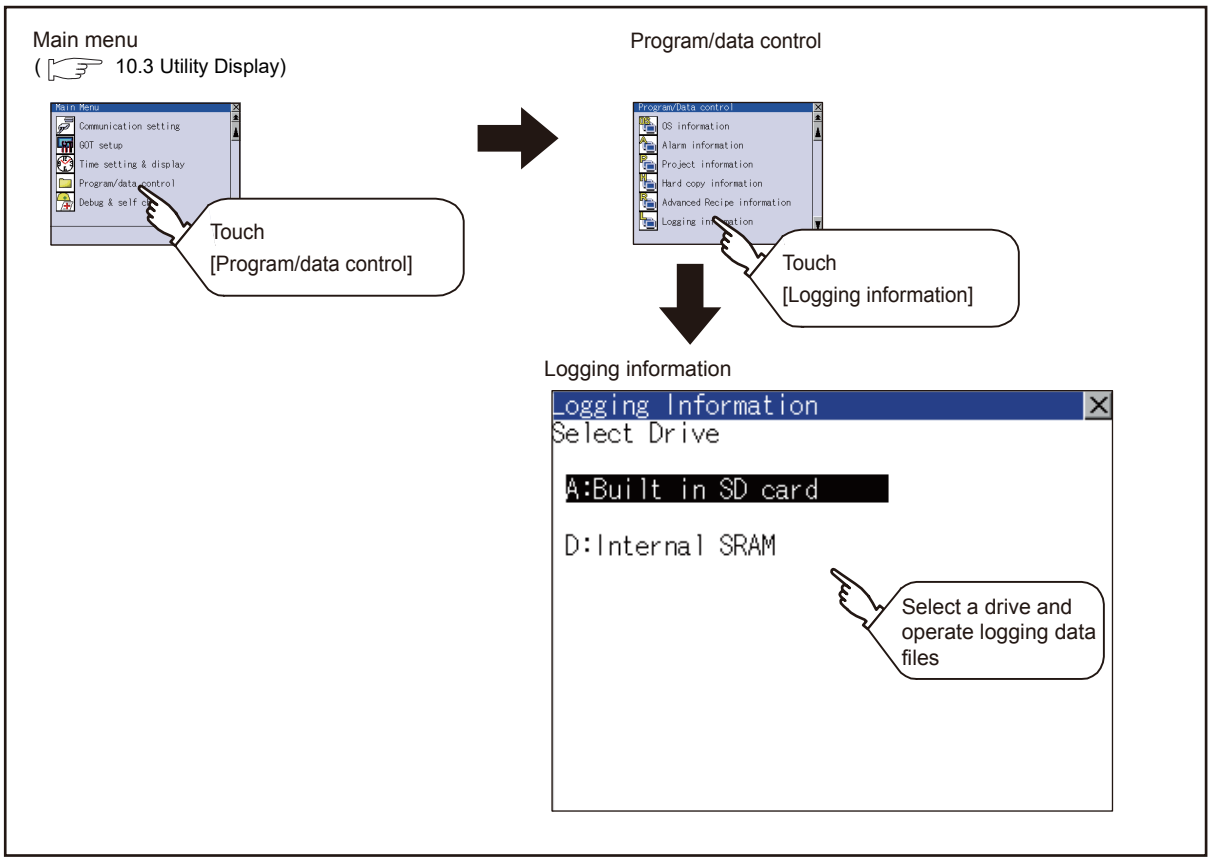

■ Display example of Logging information

Logging Information

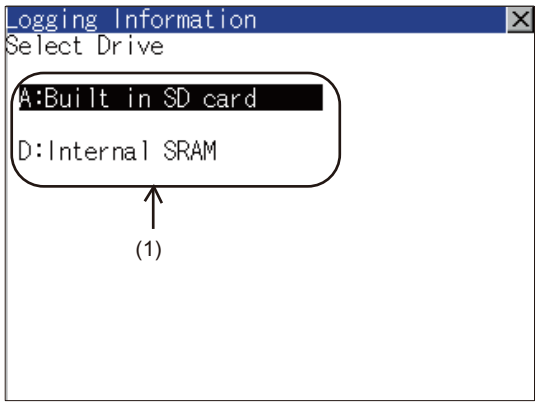

Logging Information
Storage file/folder display screen

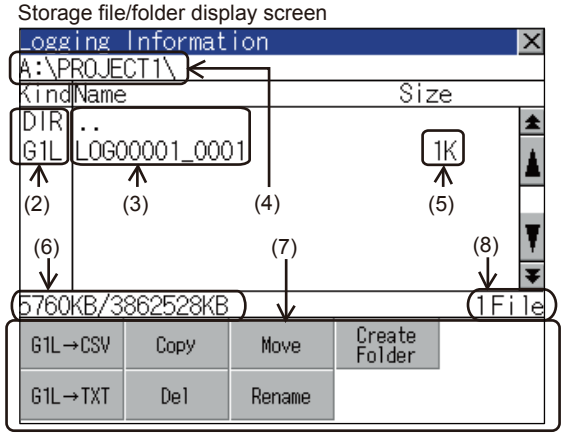

Number	Item	Description
(1)	Select drive	The target drive can be selected. (Even if SD card is not installed, this message appears.)
(2)	Kind	Indicates the type of the displayed name (file or folder). In case of file, displays the extension; in case of folder, displays "DIR".
(3)	Name	Displays the file name or folder name. For the long file/folder name, entire part may not be displayed. Confirm the nondisplayed part with the [Rename] button, etc. (☞ 14.2.6 ■Logging information operation (6)Rename operation) After confirmation, touch the [Cancel] button to cancel the operation.
(4)	Path name	Displays the path name of drive/folder which is currently displayed.
(5)	Size	Displays the size of the file displayed in [Name].
(6)	The size of drive	Displays the size in use and the entire size of the drive which is selected by drive selection.
(7)	Operation switch	Execution switch of each function.
(8)	Number of files	Displays the total number of the displayed files.

POINT

(1) About the displayed file
The files other than that for logging are not displayed on the logging information screen.

(2) Folders and files displayed
For the folders and files displayed, refer to the following.

☞ 14.1.4 Display file

■ Logging information operation

(1) Display operation of logging information

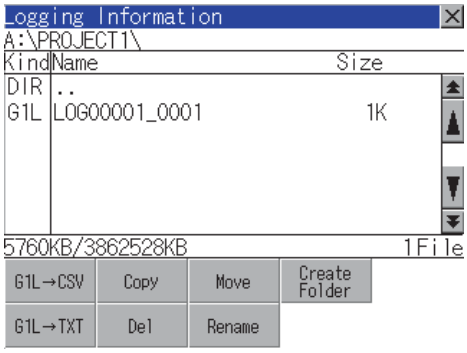

1. Touching a drive of [Select Drive] displays the information of the touched drive.
2. Touching a folder name displays the information of the touched folder.
3. Touching a folder name of [. .] displays the information of the folder in one upper hierarchy.
4. Touching ▲ ▼ button of the scrollbar scrolls up/down the screen by one line.
   Touching ⏫ ⏬ button scrolls up/down the screen by one screen.
5. Touching a file name selects the file.
6. For operation of operating switches, refer to the following.
   G1L → CSV, G1L → TXT
   ..... This section (2)
   Delete..... This section (3)
   Copy..... This section (4)
   Move ..... This section (5)
   Rename ..... This section (6)
   Create Folder ..... This section (7)
7. Touching [×] button closes the screen.

(2) Operation of G1L → CSV conversion G1L → TXT conversion

Logging file (G1L file) is converted to CSV file or Unicode text file that can be displayed/edited on PC.

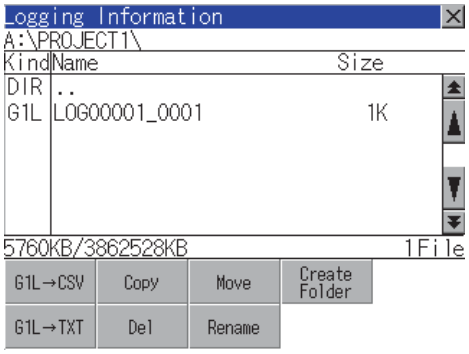

1. Touch and select the G1L file to convert into a CSV file or a Unicode text file.

2. Touch the following button in accordance with destination file type.
   - CSV file: G1L → CSV button
   - Unicode text file: G1L → TXT button

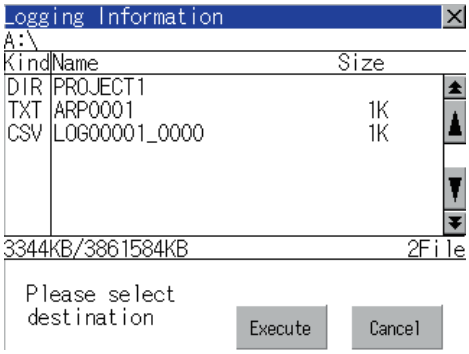

3. Select the target folder.
   (Selecting a folder is not needed for outputting directly below the drive.)

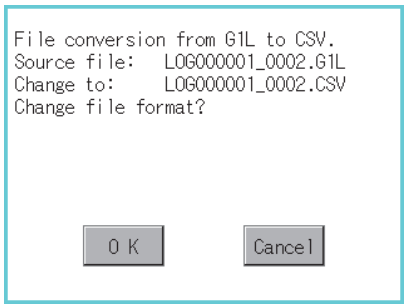

4. Touching [Execute] button displays the dialog box shown left.
   Touch [OK] button.
   (While executing, "Processing..."message appears on the screen.)

(Example: Dialog box if the [G1L → CSV] button is touched.)

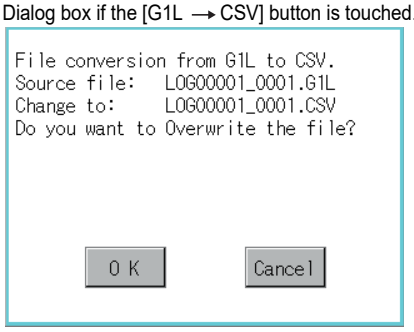

5. When the file, whose name is the same, exists in the destination folder, the dialog box shown at left appears without starting the conversion.
   Touching [OK] button overwrites the file.
   Touching [Cancel] button cancels the conversion.

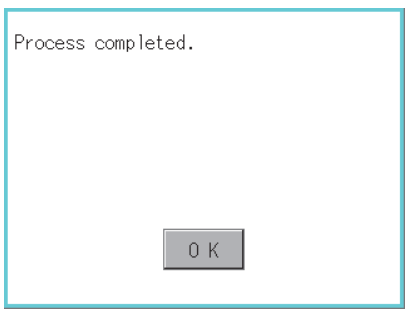

6. The message of completion is displayed in dialog box when conversion is completed.
   Touching [OK] button closes the dialog.

(3) Deletion operation

Folder and file to be used on logging are deleted.

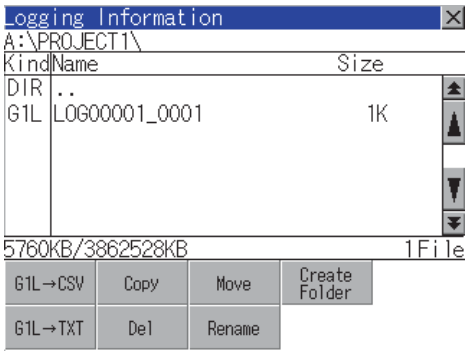

1. Touch and select the file/folder to delete.

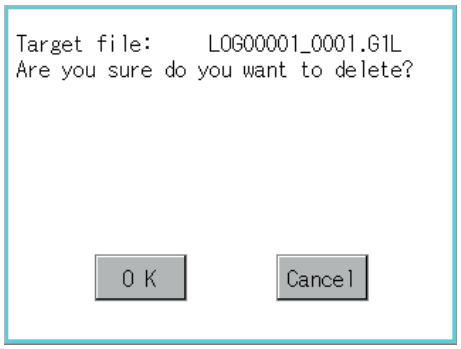

2. Touching [Del] button displays the dialog mentioned left.
Touching [OK] button deletes the file/folder.
(While executing, "Processing..."message appears on the screen.)
Touching [Cancel] button cancels the deletion.

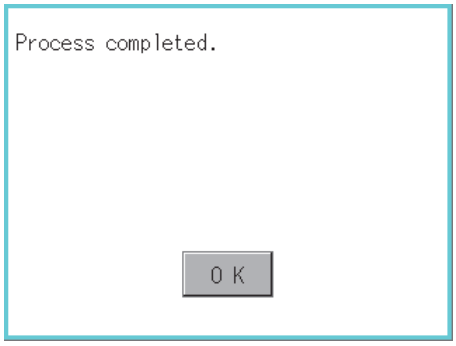

3. When the deletion is completed, the completion dialog is displayed.
Touching [OK] button closes the dialog.

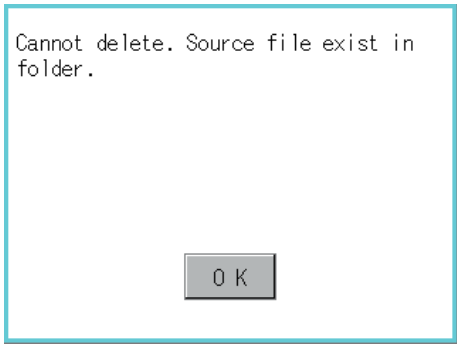

4. When it cannot be deleted, the dialog box shown at left appears. (Only when deleting folder is executed.)
Verify that there is no file in the folder and execute the delete operation again.
(☞ 14.2.6 ■Precautions)

(4) Copy operation

Folder to be used in logging is copied.

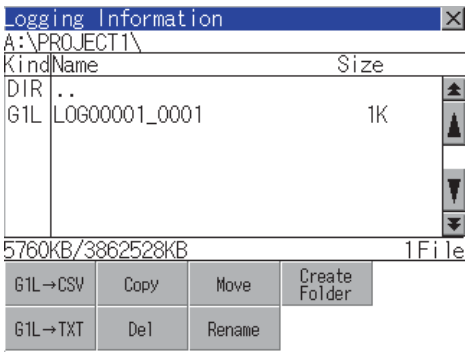

1. Touch and select the file to copy.
2. Touch the [Copy] button.

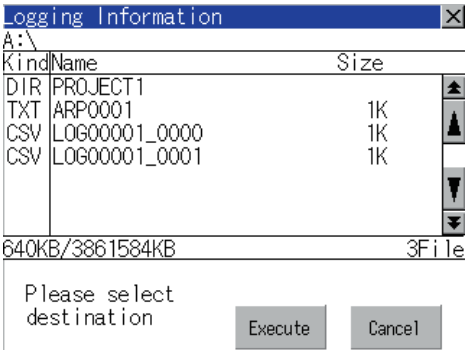

3. Select the target folder.
(Selecting a folder is not needed for outputting directly below the drive.)
At this time, it cannot be copied into the same folder where the file exists.
Select other folders.

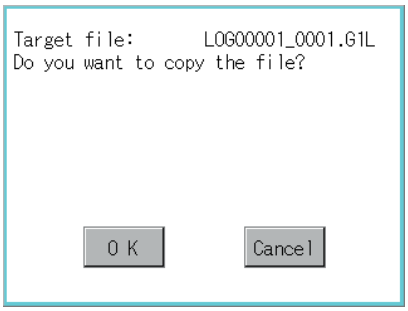

4. Touching [Execute] button displays the dialog box shown left.
Touch [OK] button.
(While executing, "Processing..."message appears on the screen.)

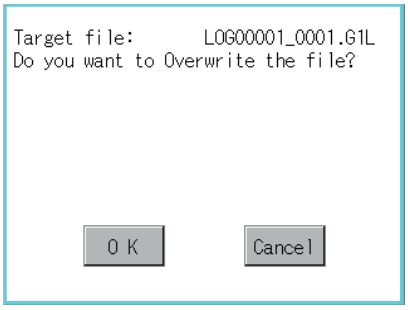

5. If there is a file of the same name in the copy destination folder, the following dialog is displayed without starting the copy.
Touching [OK] button overwrites the file.
Touching [Cancel] button cancels the copy.

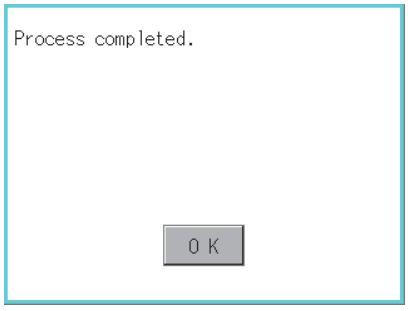

6. When the copy is completed, the dialog of completion is displayed.
Touching [OK] button closes the dialog.

(5) Move operation

An operation log file is moved.

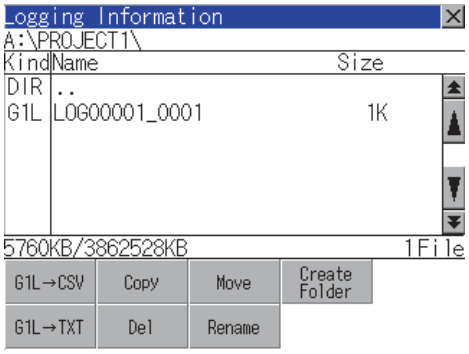

1. Touch and select the file to move.
2. Touch the [Move] button.

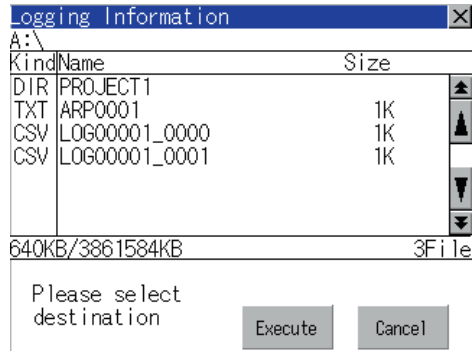

3. Select the target folder.
(Selecting a folder is not needed for moving directly below the drive.)

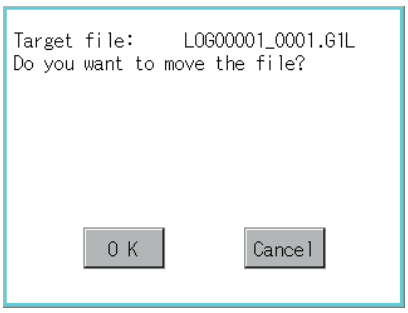

4. Touching [Execute] button displays the dialog box shown left.
Touch [OK] button.
(While executing, "Processing..."message appears on the screen.)

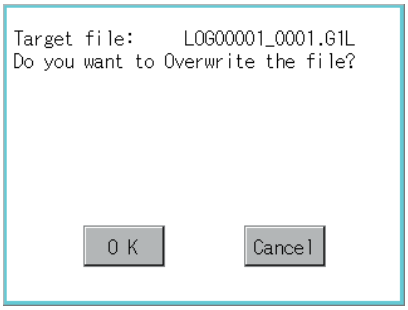

5. When any file with the same name exists in the destination folder, the dialog box shown left appears without starting the movement.
Touching the [OK] button overwrites the file.
Touching [Cancel] button cancels moving.

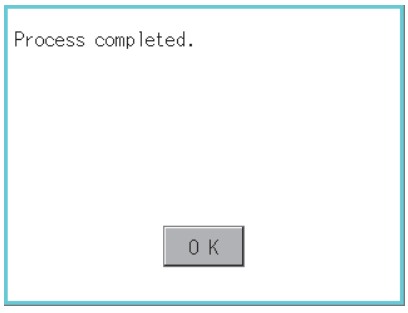

6. When moving is completed, completion dialog box is displayed.
Touching [OK] button closes the dialog.

(6) Rename operation

An operation log file is changed.

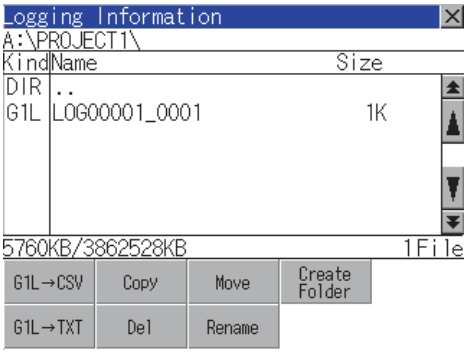

1. Touch and select the file to change the name.

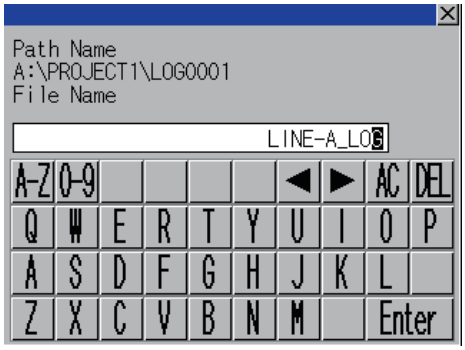

2. Touching [Rename] button displays the screen shown left. Input the file name to be changed.
By touching the following button, input text type is changed.

[A-Z]: English capital
[0-9]: Numeric/Symbol

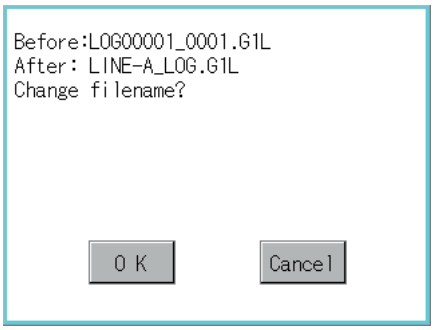

3. Touching [Enter] button displays the dialog box shown left.

4. Touching [OK] button starts renaming file.
(While executing, "Processing..."message appears on the screen.)

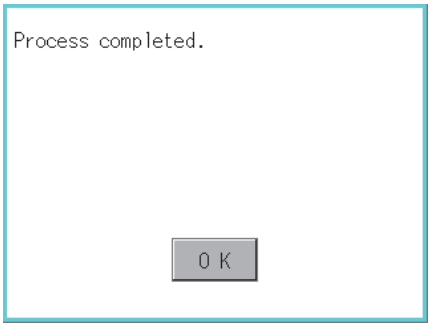

5. When renaming is completed, completion dialog box is displayed.
Touching [OK] button closes the dialog.

(7) Folder create operation

An operation log folder is created.

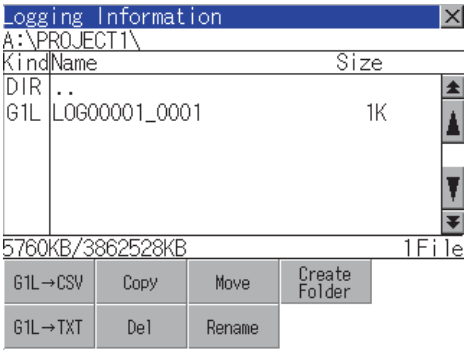

1. Touch the [Create Folder] button.

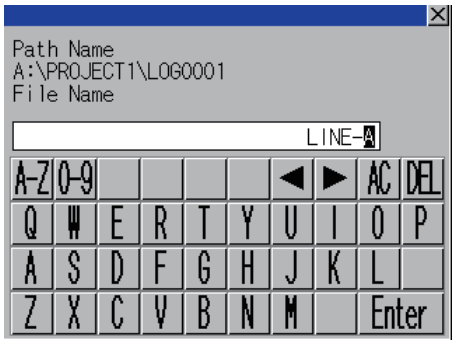

2. The input key window shown left appears, then input the file name to be created.
By touching the following button, input text type is changed.

[A-Z]: English capital
[0-9]: Numeric/Symbol

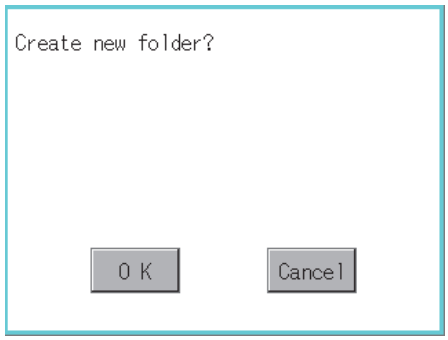

3. Touching [Enter] button displays the dialog box shown left.

4. Touching [OK] button starts creating folder.

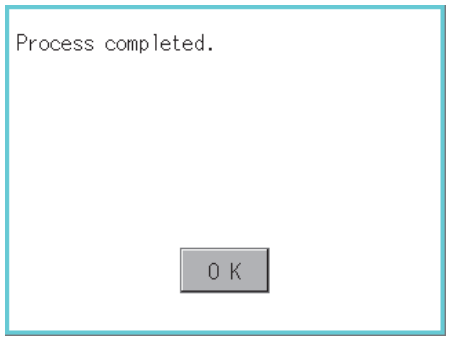

5. When creating folder is completed, completion dialog box is displayed.
Touching [OK] button closes the dialog.

■ Precautions

(1) When creating folder/file

(a) Number of characters set for folder or file name when creating folder/file.
GOT recognizes file location according to path explained below.
Specify folder or file name, and total characters of path cannot exceed 78 characters.
Users only can rename folder or file name.
(Other than folder/file name is automatically printed.)

Example: CSV file Path in SD card or USB memory

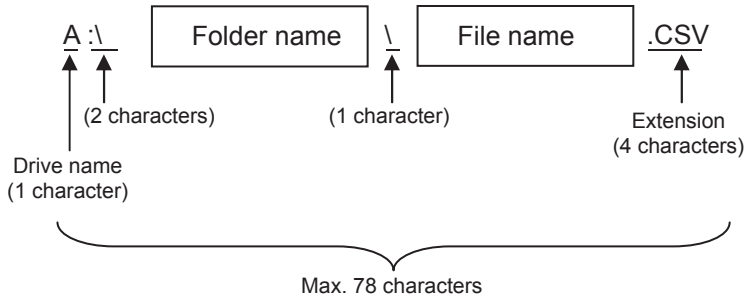

POINT

If folder is assigned the hierarchy.
The \ mark is displayed between folder name and folder name, folder name and file name. The \ mark is also counted as one character.

(b) Character strings that cannot be set to folder/file
The following character strings cannot be used as a folder name or a file name. Even small characters of those cannot be used.

- COM1 to COM9
- LPT1 to LPT9
- AUX
- CON
- NUL
- PRN
- CLOCK$

In addition, the folder/file name shown below cannot be used.

- The folder name which begins with G1.
- Folder name and file name which begin with. (period).
- Folder name and file name which finish with. (period).
- Folder name and file name which have only. (one period) or .. (two periods).

(c) For deleting the folder
The folder in which the file exists cannot be deleted.
Delete the folder after having deleted the files.
In addition, on the logging information screen, the files other than logging files are not displayed on GOT.
When the folder, in which there is no file displayed on the screen, cannot be deleted, confirm whether there is other file in SD card or USB memory by using personal computer, etc.

(2) Precautions for operation

(a) Precautions during folder/file operation (Create/Delete/Copy/File output, etc)
Even if SD card access switch has been turned OFF while GOT is processing folders and files, the processing continues to be executed.
(Example: Even if SD card access switch has been turned OFF while GOT is creating a folder, the folder is created.)
Therefore, do not pull out the SD card while the "Processing..." message is on the screen after SD card access switch has been turned OFF.

(b) While GOT is accessing to other file (Alarm data, etc)
When folder/file processing for the logging is executed while the GOT is in access to other files (SD card access LED ON), the GOT executes folder/file processing for the logging after the processing for other files is completed.
Therefore, it may take some time to finish the process of the logging folder/file.
(The "Processing..." message is displayed on the screen.)

14.2.7 Memory card format

■ Function of the memory card format

Format the SD card/USB memory/Internal SRAM.

■ Display operation of Memory card Format

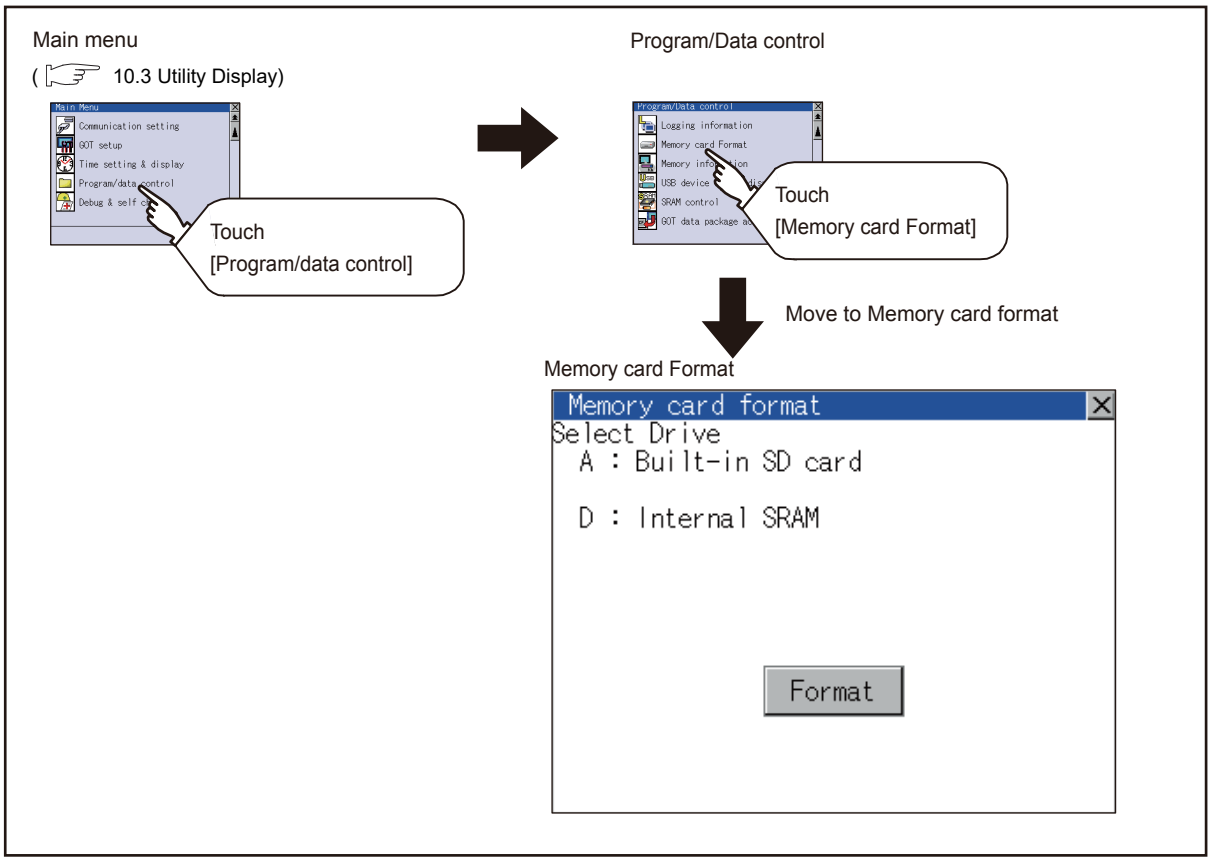

■ Memory card format operation

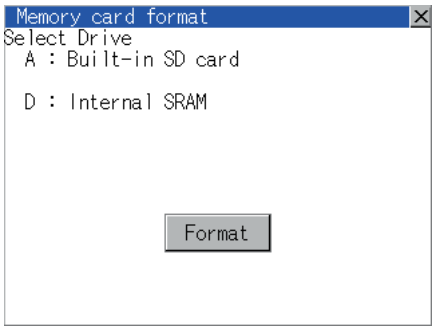

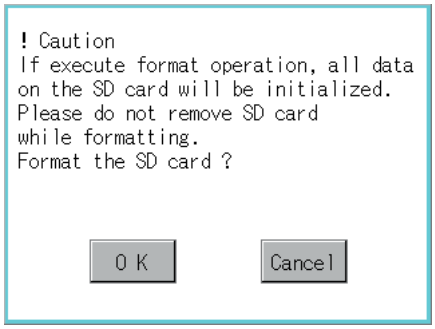

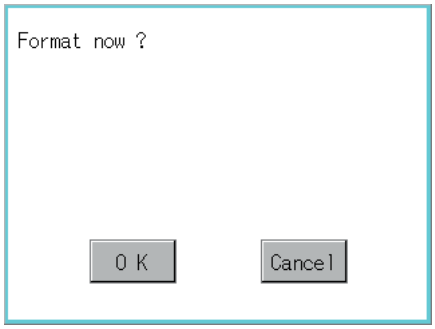

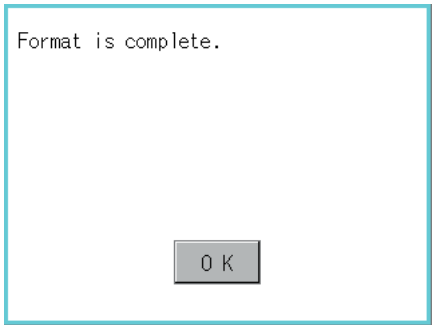

1. Mount the SD card/USB memory to GOT.
   For inserting/removing method of SD card/USB memory, refer to the following.
   ☞ 6.1.2 Installing and removing procedures of the SD card
   6.2.2 Installing and removing procedures of the USB memory
2. Touch and select the drive to format by drive selection.
3. Touching [Format] button displays the password input screen.
4. Typing [1] [1] [1] [1] and touching the [Enter] key display the dialog box shown on the left. (The password is fixed to 1111.)
   Confirm the contents of the dialog box, and touch [OK] button when execute the format of SD card or USB memory.
   To cancel the memory card format, touch [Cancel] button.
5. When touching the [OK] button in *4.*, the dialog box shown left appears for recheck.
6. Reconfirm whether to format the SD card or USB memory.
   Touching the [OK] button starts the format.
   Touching the [Cancel] button cancels the format of SD card or USB memory.
7. When the formatting is completed, the completion dialog mentioned left is displayed.
8. Touching the [OK] button closes the dialog box.

POINT

Restrictions on formatting

- When use an unformatted SD card or USB memory in GOT, format the SD card or USB memory by PC. GOT cannot format the unformatted SD card or USB memory.
- The formatting of GOT does not change the file system (Example: FAT16) of the SD card or USB memory and inherits the file system before formatting.

14.2.8 Memory information

■ Memory information functions

Displays the flash memory empty area size available for the user of each drive and Boot drive empty area size.
Confirming memory empty space is enabled without connecting a PC.

■ Display operation of Memory information

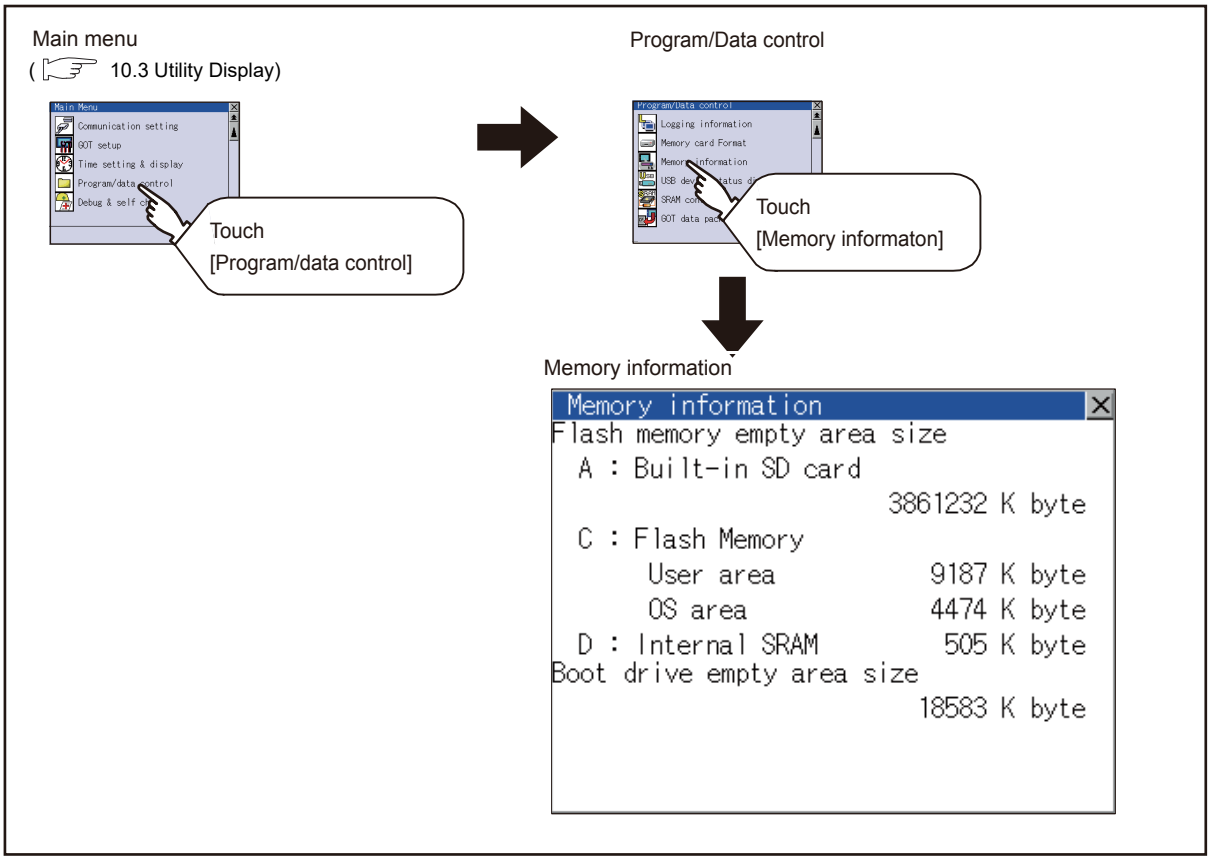

■ Display example of Memory information

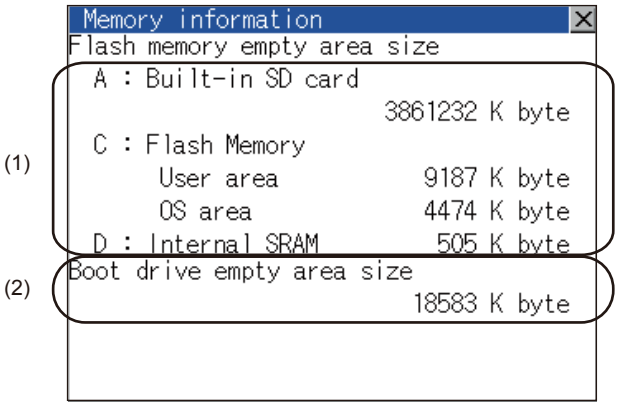

Number	Item	Description
(1)	Flash memory empty area size	Indicates the memory space of each drive available for the user to store files or folders. The [A: Built-in SD card] is not displayed when SD card is not installed. If the USB memory is not installed, [E: USB drive] is not displayed.
(2)	Boot drive empty area size	Indicates the empty area size of boot drive specified by the user.

14.2.9 USB device status display

■ Function of USB device status display

This function displays a list of the USB device connection status in the GOT.
Also, this screen is used to remove the USB device from GOT.

■ Display operation of USB device status display

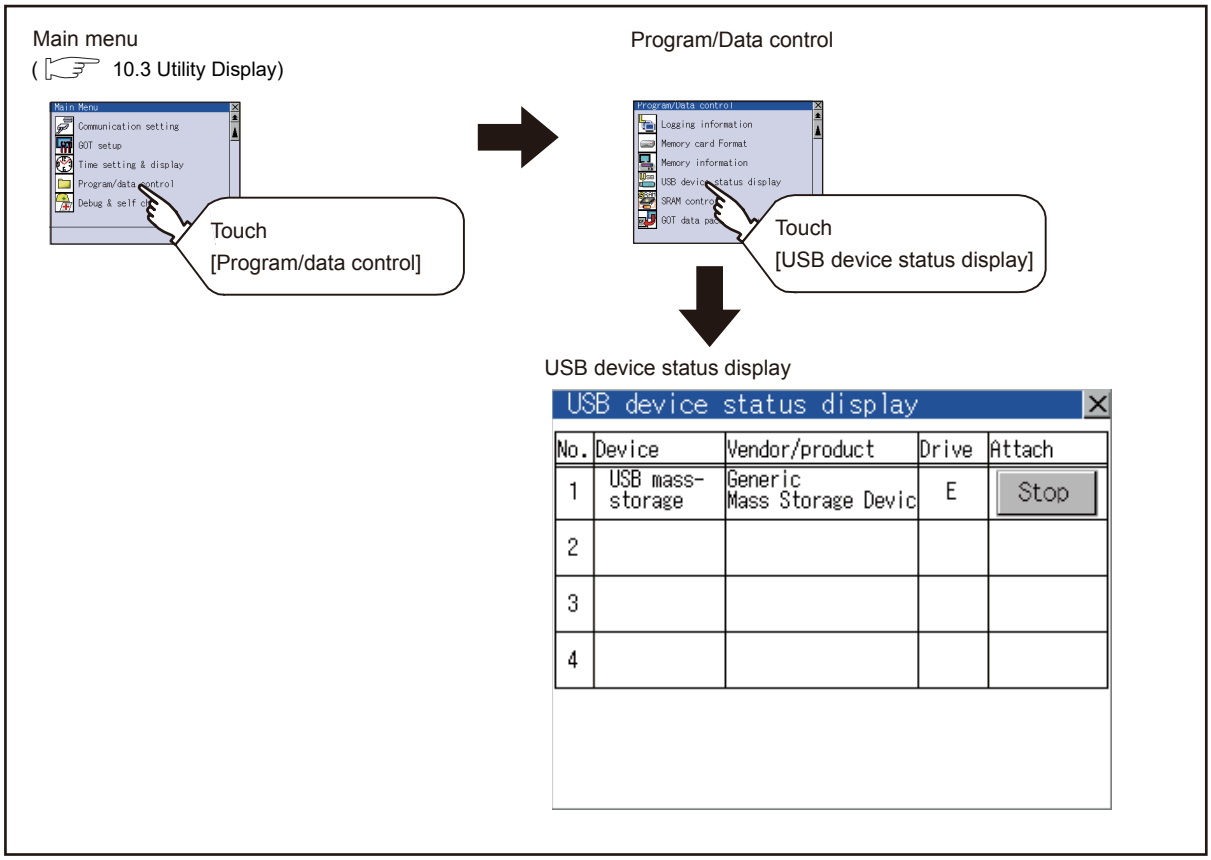

■ USB device status display operation

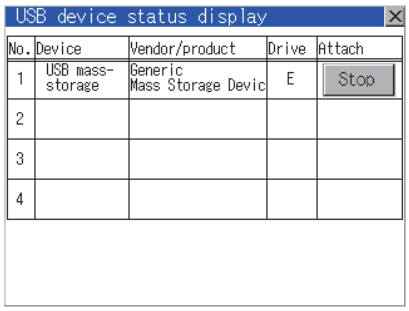

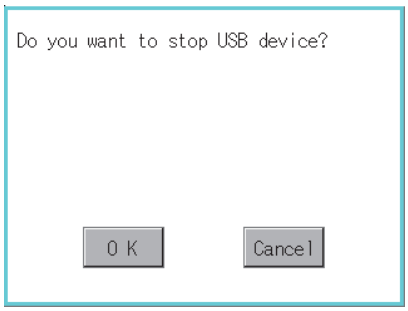

1. When the USB device is installed to GOT, the screen shown left is displayed.
2. USB mass storage is displayed in Device, and [Stop] button is displayed in Attach.
3. Touching the [Stop] button displays the dialog box shown left.
   Touching the [OK] button execute the preparation of the USB devices removal.
   Touching the [Cancel] button cancels the preparation of USB devices removal.
4. When the preparation of removal is ready, the dialog box shown left is displayed.
5. Touching the [OK] button closes the dialog box.

POINT

USB mouse/keyboard recognition

When using the USB mouse/keyboard, install [USB mouse/keyboard] of the extended function OS to the GOT.

14.2.10 SRAM control

■ Function of SRAM control

The SRAM user area usage can be confirmed, data in the SRAM user area can be backed up or restored, and the SRAM user area is initialized.

For the available functions in the SRAM user area, refer to the following.

☞ GT Designer3 Version1 Screen Design Manual (Functions)

■ Display operation of SRAM control

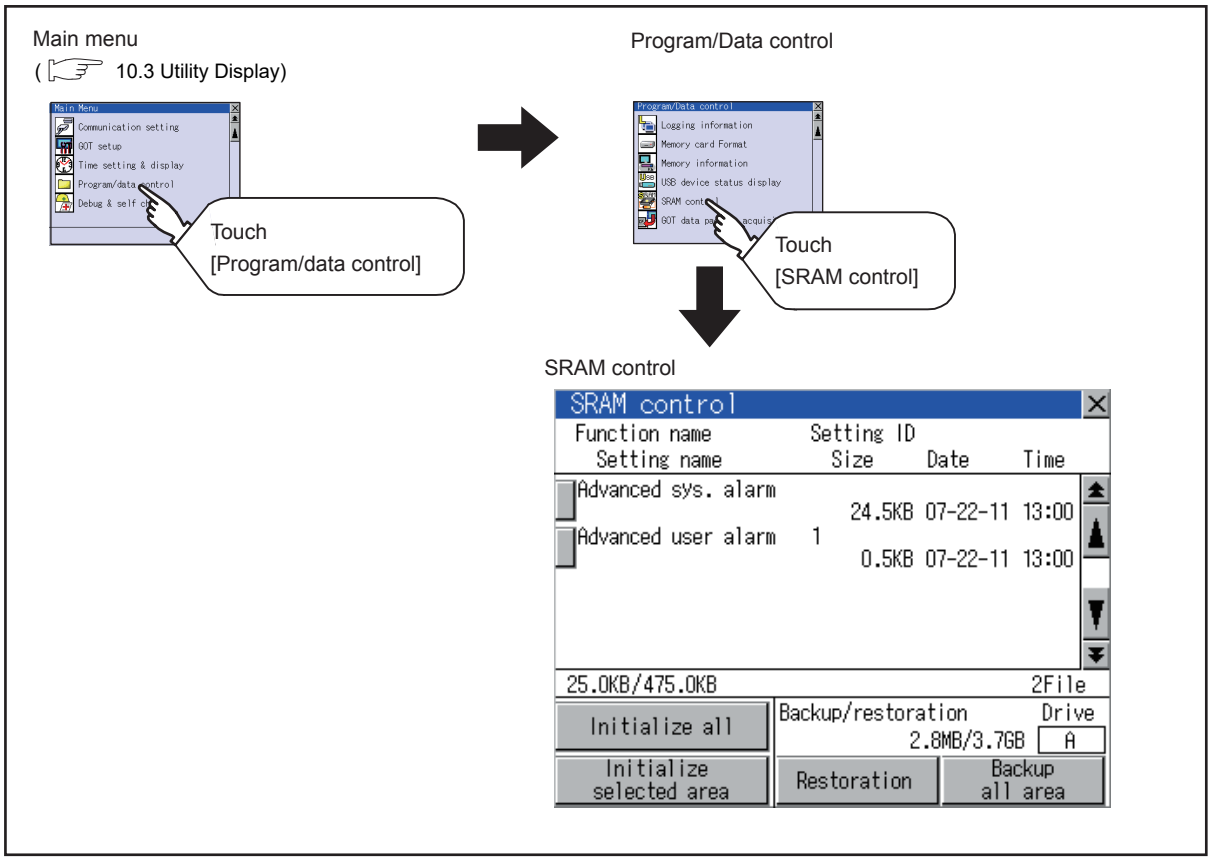

■ Display example of SRAM control

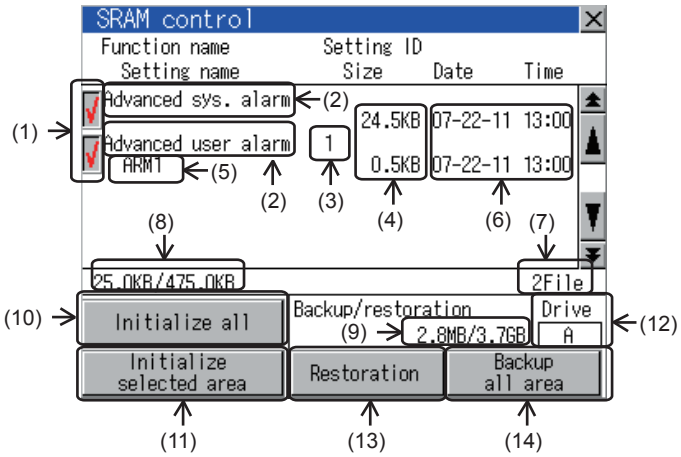

Number	Item	Description
(1)	Check box	Touch the check box to select or clear the item.
(2)	Function name	Displays the used functions in the order of the advanced system alarm, advanced user alarm, and logging function.
(3)	Setting ID	Displays the setting IDs. The setting IDs of the advanced system alarm are not displayed.
(4)	Size	Displays the data size.
(5)	Setting name	Displays the setting name. For the setting name, only characters within the display range are displayed.
(6)	Date and time	Displays the creation date and time of each data.
(7)	Number of selected files	Displays the information of the items currently selected.
(8)	SRAM area	Displays the current free space size or total size of the SRAM user area.
(9)	Drive space	Displays the current free space size or total size of the drive selected for [Select drive].
(10)	Initialize all	Initializes all areas of the SRAM user area.
(11)	Initialize selected area	Select each area of the SRAM user area to initialize multiple areas of the SRAM user area.
(12)	Select drive	Switches drives to be used for the data backup or restoration in the SRAM user area.
(13)	Restoration	Saves the data in the selected drive to SRAM user area. The following drives can be switched only when a SD card or USB memory is installed. • SD card: [A: Built-in SD card] • USB memory: [E: USB drive]
(14)	Backup all area	Saves data in the SRAM user area to the selected drive.

■ SRAM control operation

(1) Operation to initialize all or selected areas of the SRAM user area

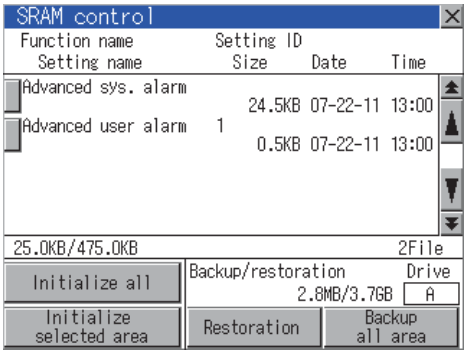

(Example: Dialog box when touching the [Initialize all] button)

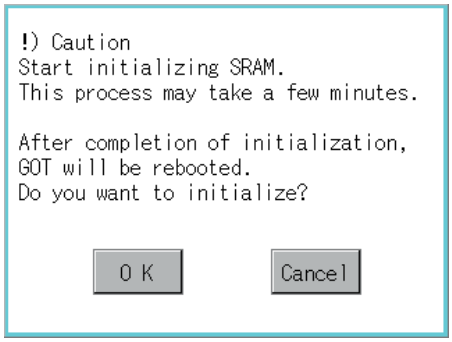

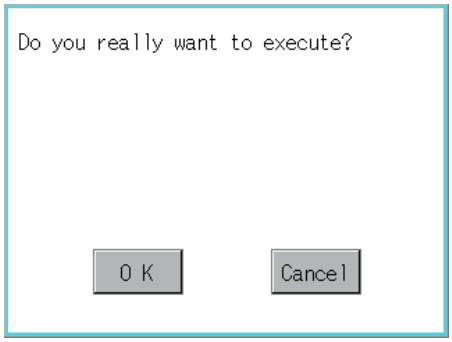

1. Perform any of the following operations.
   - To initialize all areas of the SRAM user area, touch the [Initialize all] button.
   - To initialize selected areas of the SRAM user area, select the check box of the area to be initialized, and then touch the [Initialize selected area] button.

2. The dialog box shown left appears.
   Check the description of the dialog box. To initialize the SRAM user area, touch the [OK] button.
   To cancel the initialization, touch the [Cancel] button.

3. When touching the [OK] button in 2., the dialog box shown left appears for recheck.

   Touching the [OK] button starts the initialization.
   Touching the [Cancel] button cancels the initialization.

4. The completion dialog box appears when the initialization is completed.
   Touching the [OK] button closes the dialog box.

(2) Operation to restore data

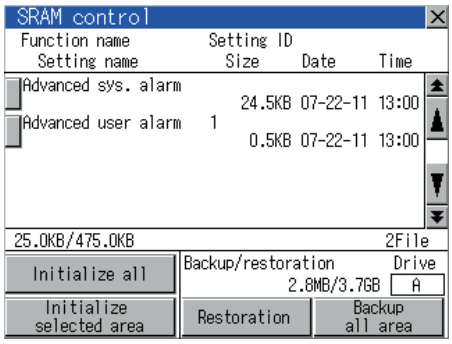

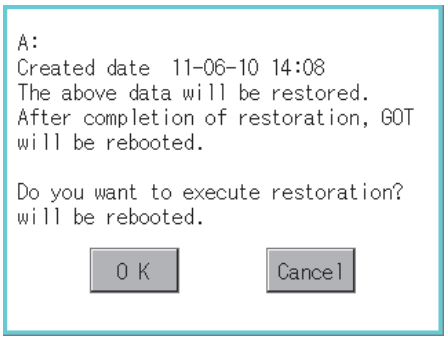

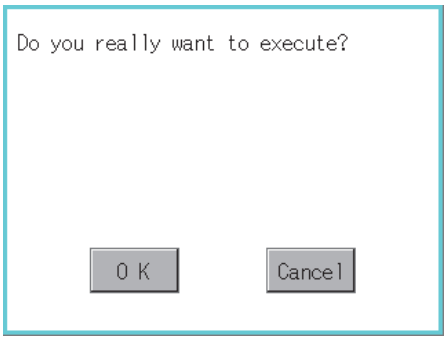

1. To restore data in the drive to the SRAM user area
Select the drive where the data is stored, and then touch the [Restoration] button.

2. The dialog box shown left appears.
Check the description of the dialog box. To restore all data in the SRAM user area, touch the [OK] button.
To cancel the restoration, touch the [Cancel] button.

3. When touching the [OK] button in 2., the dialog box shown left appears for recheck.

Touching the [OK] button starts the restoration.
Touching the [Cancel] button cancels the restoration.

4. The completion dialog box appears when the restoration is completed.
Touching the [OK] button closes the dialog box.

(3) Operation to back up all data in the SRAM user area

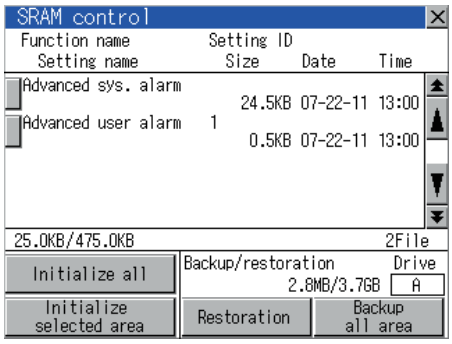

1. To back up data in the SRAM user area to a drive Select the drive where the data is to be stored, and then touch the [Backup all area] button.

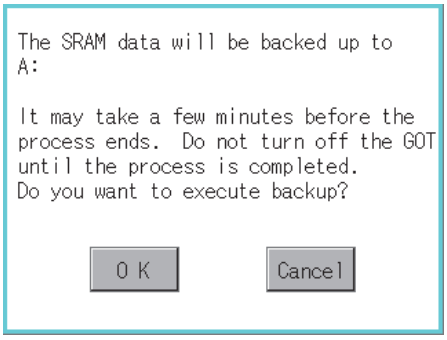

2. The dialog box shown left appears.
Check the description of the dialog box. To back up all data in the SRAM user area, touch the [OK] button.
To cancel the backup, touch the [Cancel] button.

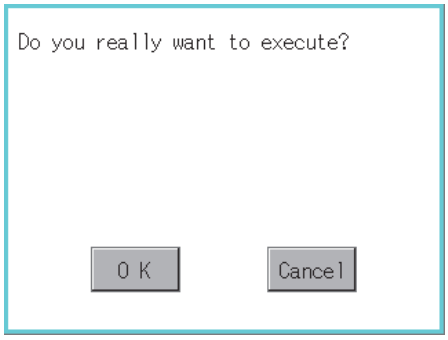

3. When touching the [OK] button in 2., the dialog box shown left appears for recheck.

Touching the [OK] button start the backup.
Touching the [Cancel] button cancels the backup.

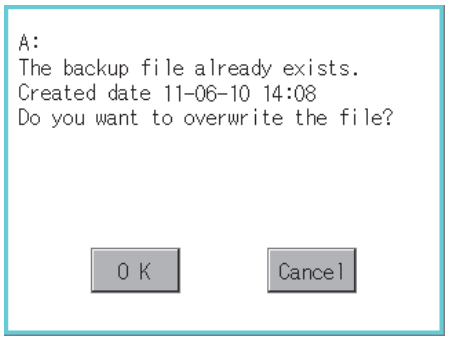

4. When the file, whose name is the same, exists in the destination folder, the dialog box shown left appears without starting the backup.
Touching [OK] button overwrites the file.
Touching the [Cancel] button cancels the backup.

5. The completion dialog box appears when the restoration is completed.
Touching the [OK] button closes the dialog box.

14.2.11 GOT data package acquisition

■ GOT data package acquisition function

The GOT data package acquisition copies the installed OS or data in the GOT main unit to the SD card or USB memory.

- OS (Boot OS, standard monitor OS, communication driver, extended function OS, option OS)
- Special data
- Project data

The copied data can be utilized for backup or creating the same GOT system by installing the data.
For installation function of the GOT, refer to the following.

☞ 17.3 BootOS and Standard Monitor OS Installation Using SD card or USB Memory

■ Display operation of GOT data package acquisition

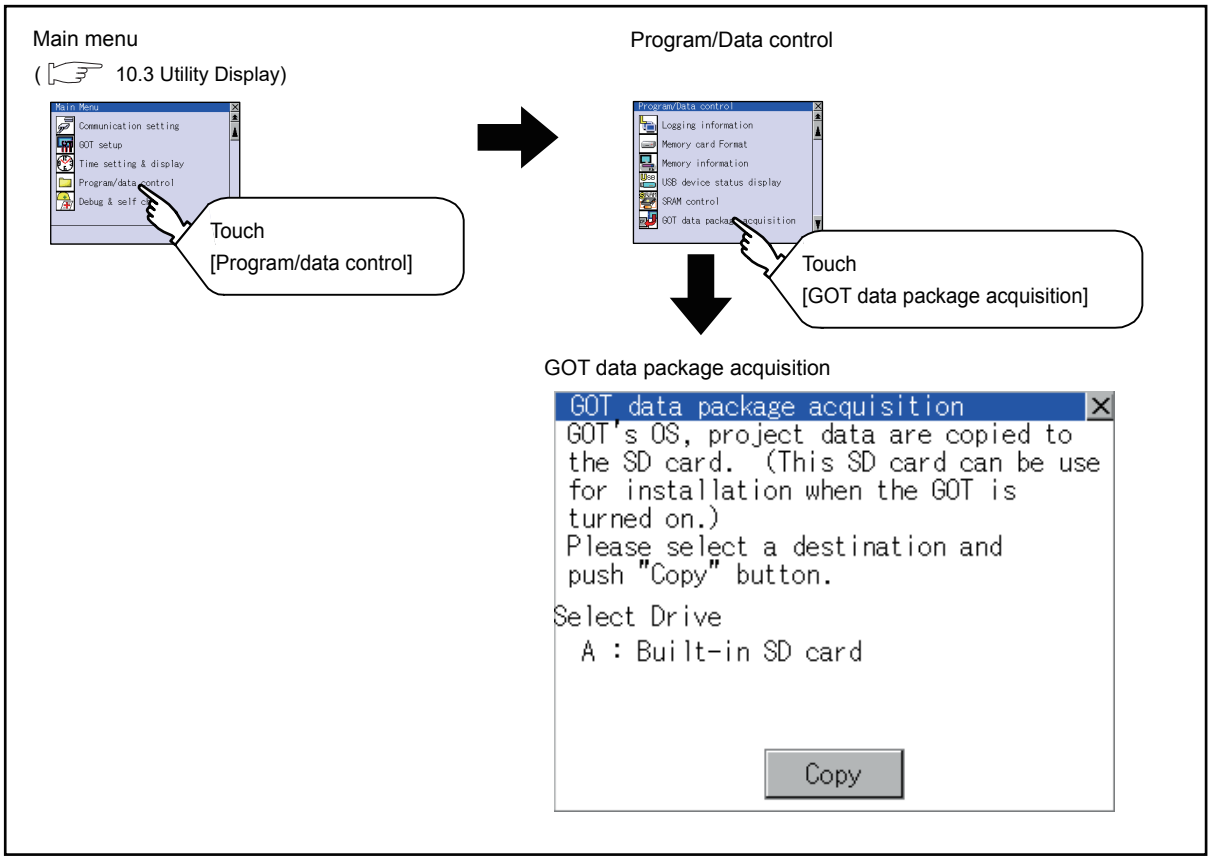

14.2.12 Operator information management

■ Operator management

(1) Operator management function

The function enables displaying a list of the operator information and adding, changing, or deleting the operator information to be used.

A password for operator authentication can be changed when the password is out of date.

Functions for the operator authentication (automatic logout time, authentication method, password expiration date, etc.) can be set.

For details of operator authentication functions, refer to the following manual.

☞ GT Designer3 Version1 Screen Design Manual (Fundamentals)

Function	Description	Reference
Operator management	Enables adding, editing, deleting, importing, and exporting the operator information.	14-74, 14-77
Add operation	Adds operator information to the GOT.	14-78
Edit operation	Edits the operator information stored in the GOT.	14-80
Delete operation	Deletes the operator information stored in the GOT.	14-81
Undo	Restores the current operator information to the previous saved one.	14-82
Import operation	Imports the operator information that is already exported to a SD card to the GOT.	14-83
Export operation	Exports the operator information stored in the GOT to a SD card.	14-84
Password change	Enables changing passwords to be used for login and logout in/out of the GOT.	14-85
Function setting	Enables setting the automatic logout time and password expiration date.	14-87

(2) Display operation of operator management

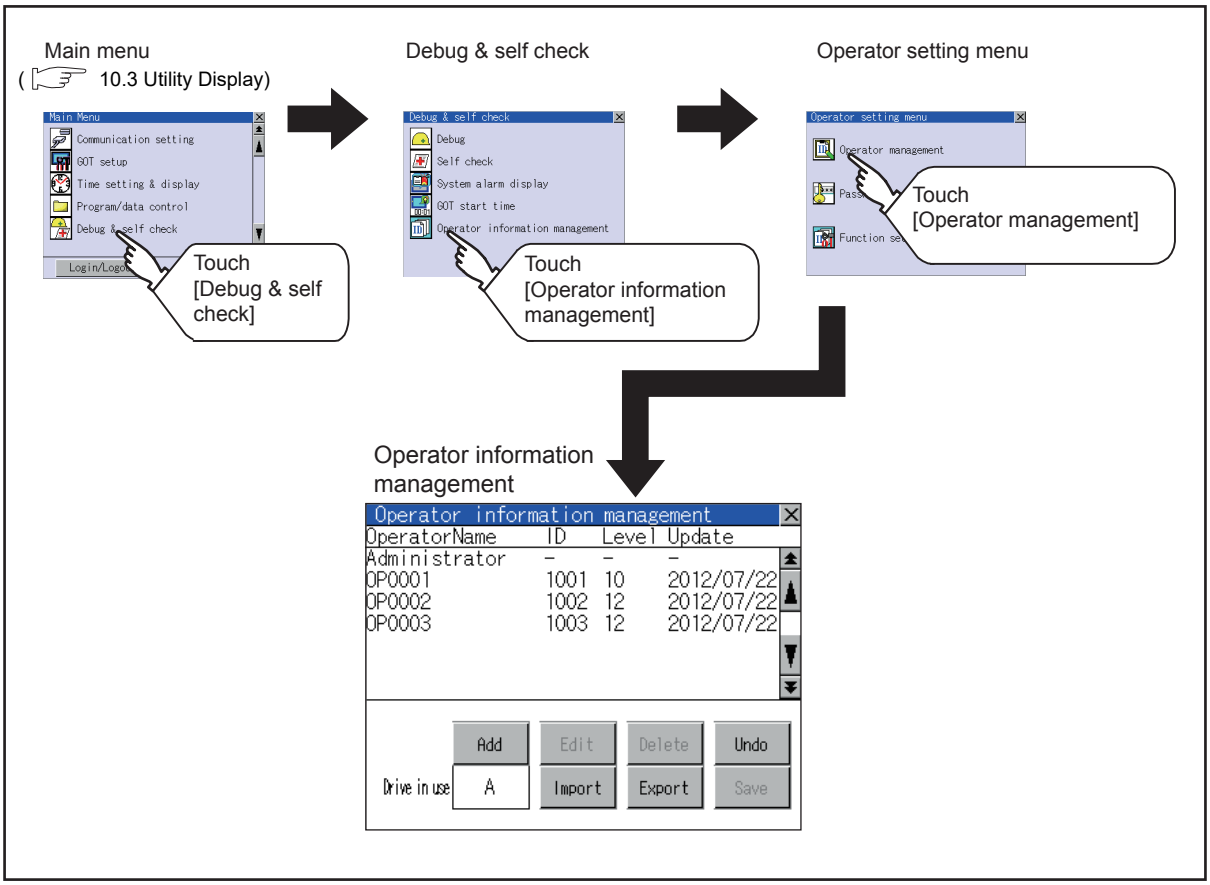

(3) Display example of operator management

(a) Operator information management screen

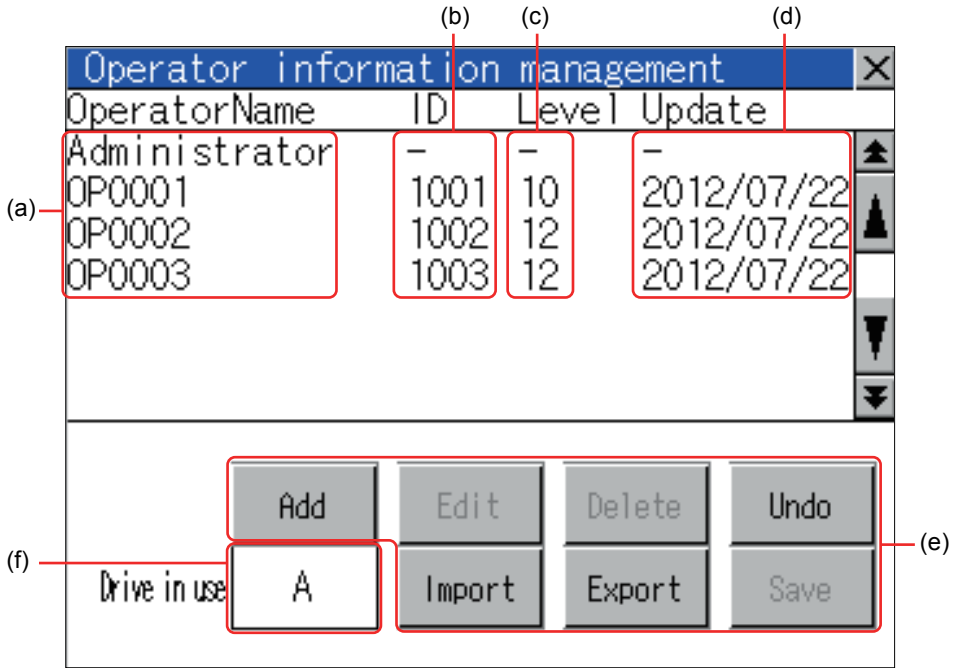

No.	Item	Description
(a)	Operator Name	Displays operator names.
(b)	ID	Displays operator IDs.
(c)	Level	Displays security levels for operators.
(d)	Update	Displays the last updated dates of the operator information.
(e)	Operation keys	Execution keys for each function
(f)	Drive in use	Displays and sets the storage location for imported and exported operator information. Touch the item, and then the display switches. (A: Built-in SD card) The display switches only when USB drive is installed on the GOT.

(b) Operator information edit screen

Touch the [Add] button or touch the [Edit] button with the operator information selected on the Operator information management screen, and then the Operator information edit screen is displayed.
The operator information can be edited.

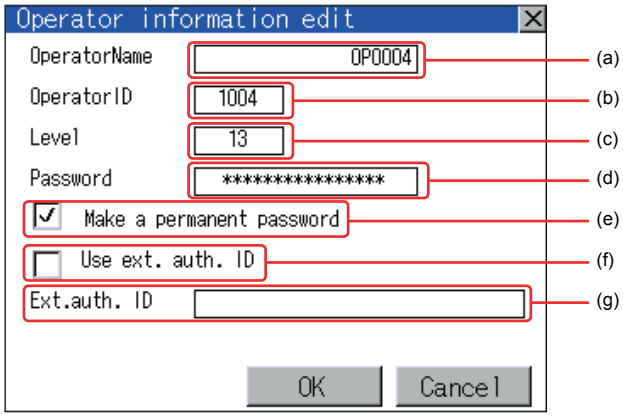

No.	Item	Description
(a)	Operator Name	The operator name to be edited is displayed or input an operator name to be added. (Up to 16 alphanumeric characters)
(b)	Operator ID	The operator ID to be edited is displayed or input an operator name to be added. (Setting range: 1 to 32766, Maximum number of registrations: 255)
(c)	Level	The operator security level to be edited is displayed or input an operator security level to be added. (0 to 15)
(d)	Password	Input a password. (Up to 16 alphanumeric characters.)
(e)	Make a permanent password	Switches the setting of the item disabled and enabled. (☐ : Disabled ☑ : Enabled)
(f)	Use ext. auth. ID	Switches whether to use the external authentication ID. (☐ : Not Used ☑ : Used)
(g)	Ext.auth. ID	The external authentication ID is displayed or input an external authentication ID. (External authentication ID setting range: alphanumerics*4 to 32 digits) ☞ ■ Function setting

*1 Since the GT14 Handy is not connectable with RFID, it does not correspond to the external authentication function.

(4) Operator management operation

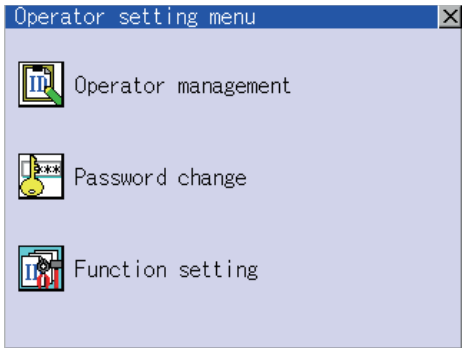

1. Touch [Operator management] in the operator setting menu.

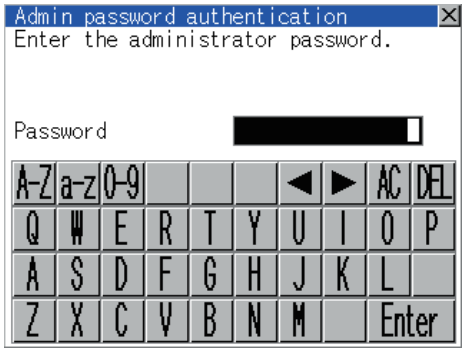

2. The Admin password authentication screen is displayed, and then input the administrator password.
Character types to be input can be changed with touching the following buttons.

A-Z : Alphabet capital
a-z : Alphabet small letter
0-9 : Numeric

When the input is completed, touch the [Enter] key.

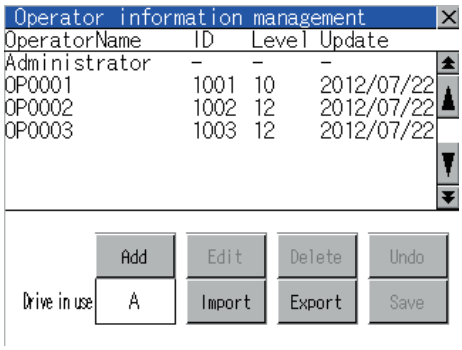

3. When the administrator password is correctly input, the Operator information management screen in displayed.
For operating operation switches, refer to the following.

Add ..... This section (4) (a)
Edit ..... This section (4) (b)
Delete ..... This section (4) (c)
Undo ..... This section (4) (d)
Import ..... This section (4) (e)
Export ..... This section (4) (f)

4. After all settings are completed, touch the [Save] button, and then the settings are saved.

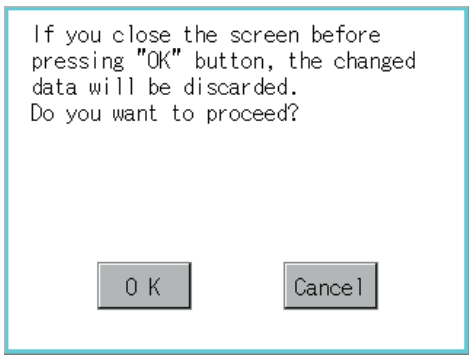

5. Touch the ☒ button without touching the [Save] button, and then the dialog box shown left is displayed.

(a) Add operation

Add operator information to the GOT.

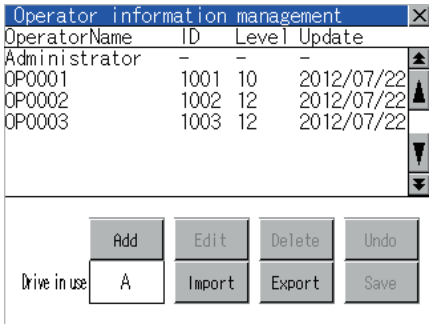

1. Touch the [Add] button.

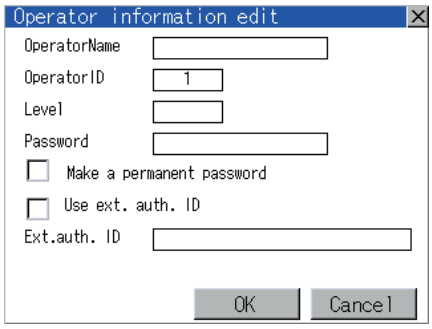

2. The Operator information edit screen is displayed, and then touch an item to be edited.
(a) OperatorName
(b) OperatorID
(c) Level
(d) Password
(e) Make a permanent password
(f) Use ext. auth. ID
(g) Ext.auth. ID

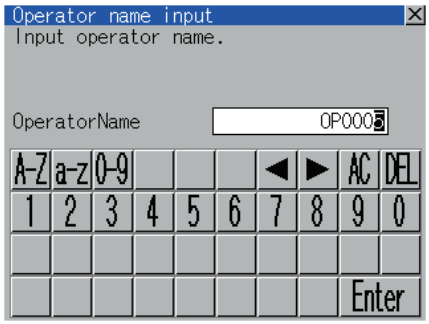

(a) Touch the OperatorName, and then the Operator name input dialog box is displayed. Input an operator name.
Character types to be input can be changed with touching the following buttons.
A-Z : Alphabet capital
a-z : Alphabet small letter
0-9 : Numeric
When the input is completed, touch the [Enter] key.

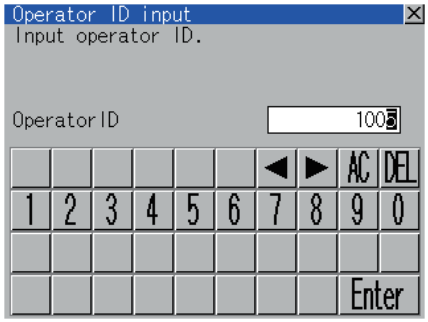

(b) Touch the OperatorID, and then the Operator ID input dialog box is displayed.
Input an operator ID.
When the input is completed, touch the [Enter] key.

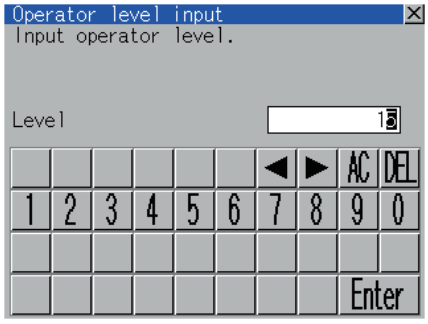

(c) Touch the level, and then the Operator level input dialog box is displayed. Input an operator level.
When the input is completed, touch the key.

When the level of the operator being login is changed during editing the operator information, a new level is not reflected until you log out of the GOT once and log in the GOT again.

(d) For changing passwords during editing, touch the password.
The New password input dialog box is displayed, and then input a password.
When the input is completed, touch the [Enter] key.
When the password input is completed, the New password input confirmation dialog box is displayed.
Input the same password.

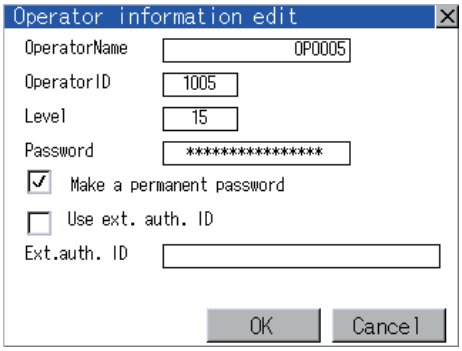

(e) For enabling the setting of [Make a permanent password], touch the check box for [Make a permanent password], and then the setting is switched.

☐ : Disabled

☑ : Enabled

(f) For using the external authentication ID, touch the check box "Use ext. auth. ID" and switch the setting.

☐: The external authentication ID is not used.

☑: The external authentication ID is used.

(g) Touch Ext.auth ID to display the external authentication ID input dialog box, and enter the external recognition ID. When the input is completed, touch the [Enter] key.

When the authentication method is set to "Fingerprint auth" or "External auth (general)", the external authentication ID can be input with the external authentication device.

3. Touch the [OK] button after all items are input, and then the dialog box shown left is displayed and the input operator information is added.

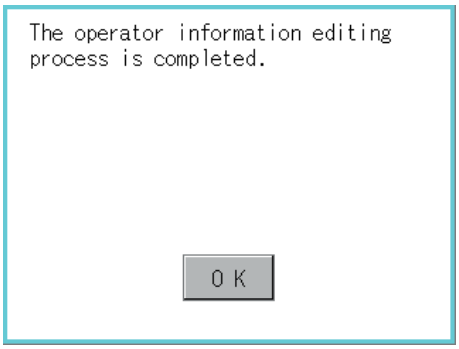

Touch the [Cancel] button or the ☒ button, and then the dialog box shown left is displayed.

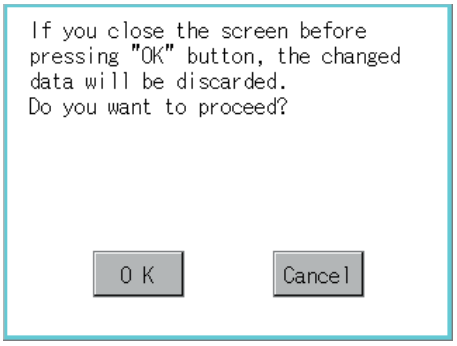

(b) Edit operation

Edit the operator information stored in the GOT.

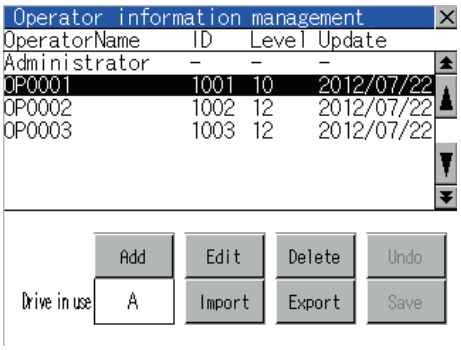

1. Select the operator information to be edited with touching the operator information.

2. Touch the [Edit] button.

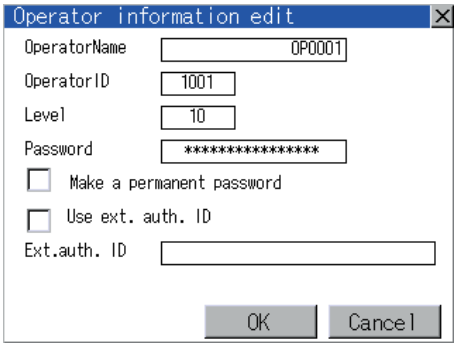

3. The Operator information edit screen is displayed, and then touch an item to be edited.
(a) Level
(b) Password
(c) Make a permanent password
(d) Use ext. auth. ID
(e) Ext.auth. ID
For how to edit operator information, refer to the following.
☞ This section (4)

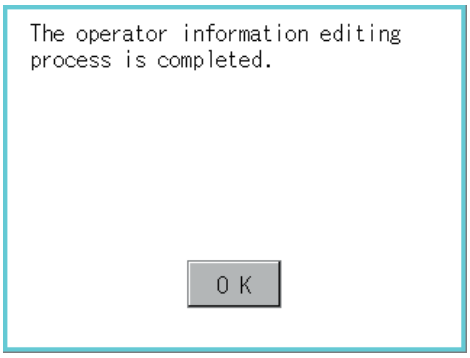

4. Touch the [OK] button after all items are input, and then the dialog box shown left is displayed and the input operator information is added.

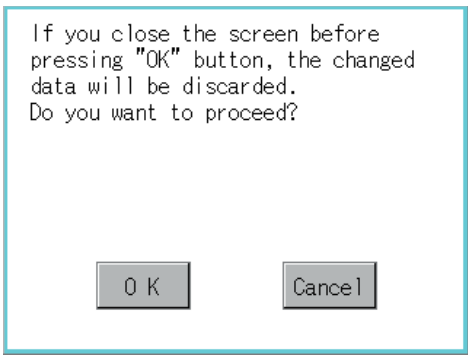

Touch the [Cancel] button or the ☒ button, and then the dialog box shown left is displayed.

(c) Delete operation

Delete the operator information stored in the GOT.

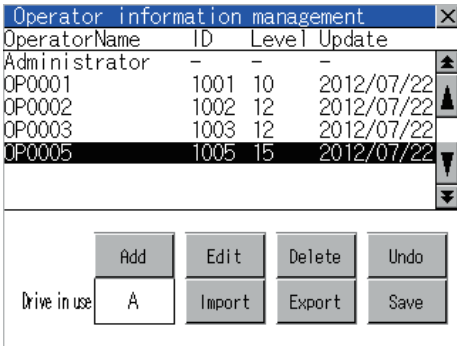

1. Select the operator information to be deleted with touching the operator information.

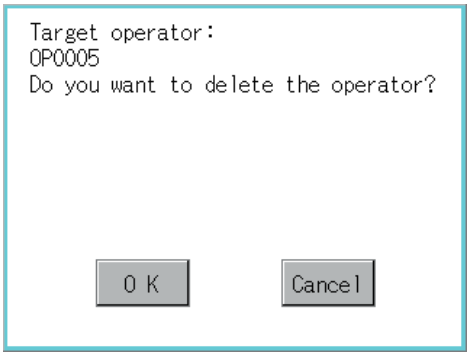

2. Touch the [Delete] button, and then the dialog box shown left is displayed.

3. Touch the [OK] button, and then the selected operator information is deleted.
Touch the [Cancel] button, and then the delete operation is canceled.

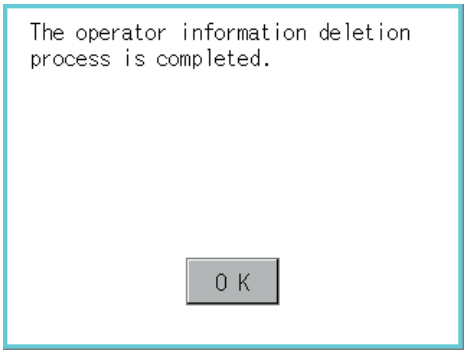

4. When the delete operation is completed, a completion dialog box is displayed.

5. Touch the [OK] button, and then the dialog box is closed.

(d) Undo operation

Restore the current operator information to the previous saved one.

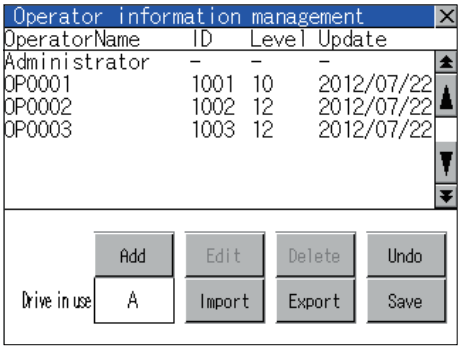

1. Touch the [Undo] button.

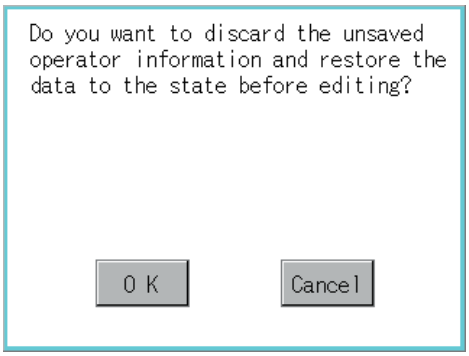

2. The dialog box shown left is displayed, and then touch the [OK] button.

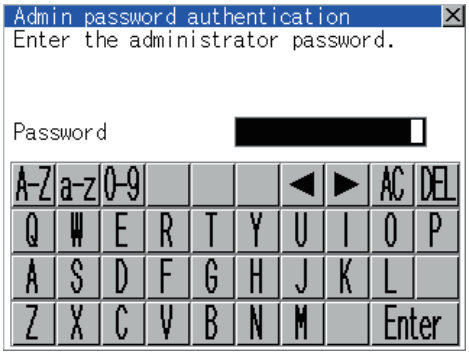

3. The Admin password authentication screen is displayed, and then input the administrator password.
Character types to be input can be changed with touching the following buttons.

A-Z : Alphabet capital
a-z : Alphabet small letter
0-9 : Numeric

When the input is completed, touch the [Enter] key.

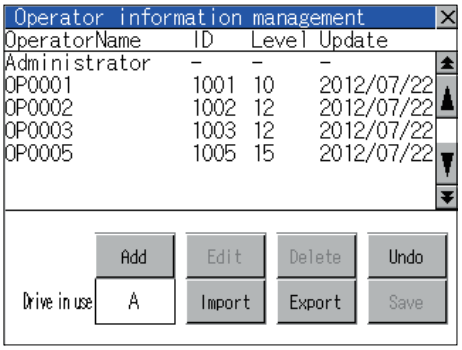

4. When the administrator password is correctly input, the current operator information is restored to the previous saved one.

(e) Import operation

Import the operator information that is already exported to a SD card to the GOT

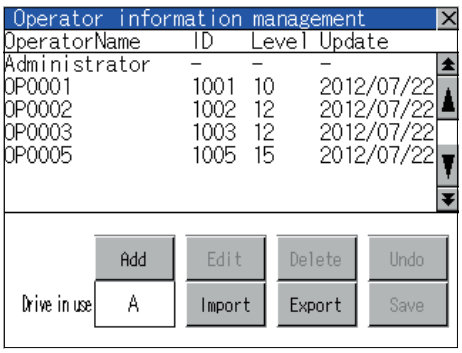

1. Touch the [Import] button.

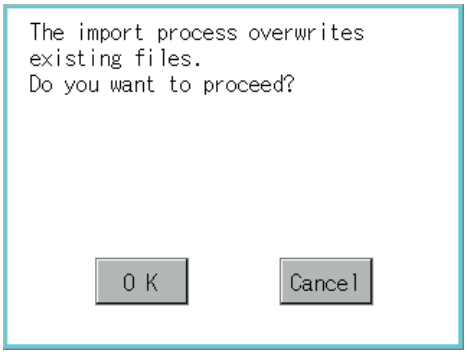

2. The dialog box shown left is displayed.
Touch button, and then the Admin password authentication screen is displayed.
Input the administrator password.
Character types to be input can be changed with touching the following buttons.
A-Z : Alphabet capital
a-z : Alphabet small letter
0-9 : Numeric
When the input is completed, touch the [Enter] key.

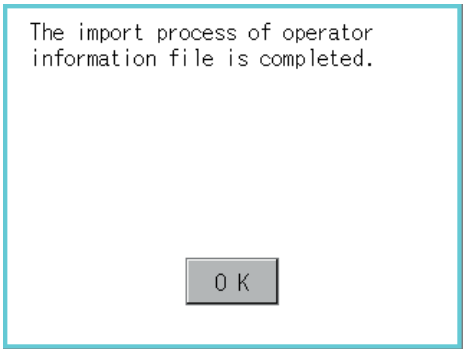

3. When the administrator password is correctly input, the dialog box shown left is displayed and the operator information stored in a SD card is imported to the GOT.

(f) Export operation

Export the operator information stored in the GOT to a SD card

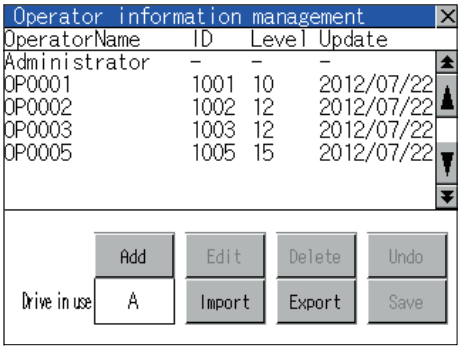

1. Touch the [Export] button.

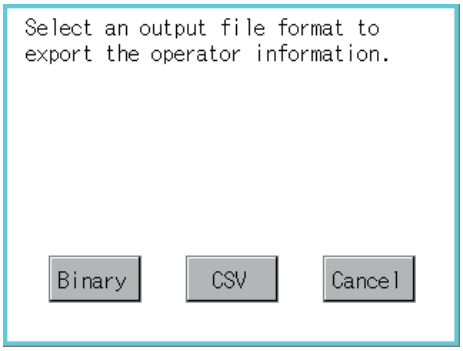

2. The dialog box on the left is displayed.

3. Touch the following buttons according to the output format for the file.

Binary file: Binary button
CSV file: CSV button

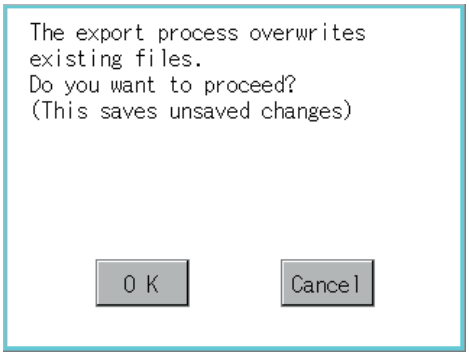

4. The dialog box shown left is displayed.
Touch [OK] button, and then the Admin password authentication screen is displayed.
Input the administrator password.
Character types to be input can be changed with touching the following buttons.

A-Z : Alphabet capital
a-z : Alphabet small letter
0-9 : Numeric

When the input is completed, touch the [Enter] key.

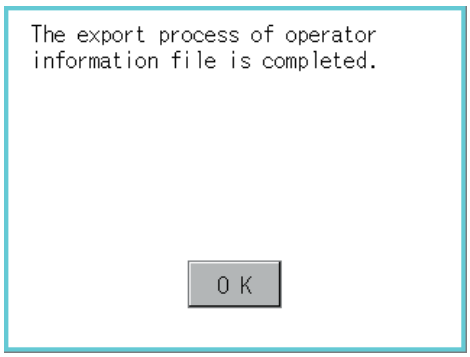

5. When the administrator password is correctly input, the dialog box shown left is displayed and the operator information stored in the GOT is exported to a SD card.
(file name: AUTHINF.G1U)

■ Password change

(1) Password change function

The passwords to be used for the operator authentication can be changed.
For the password change, log into the GOT in advance with the operator name corresponding to the password to be changed.

(2) Display operation of password change

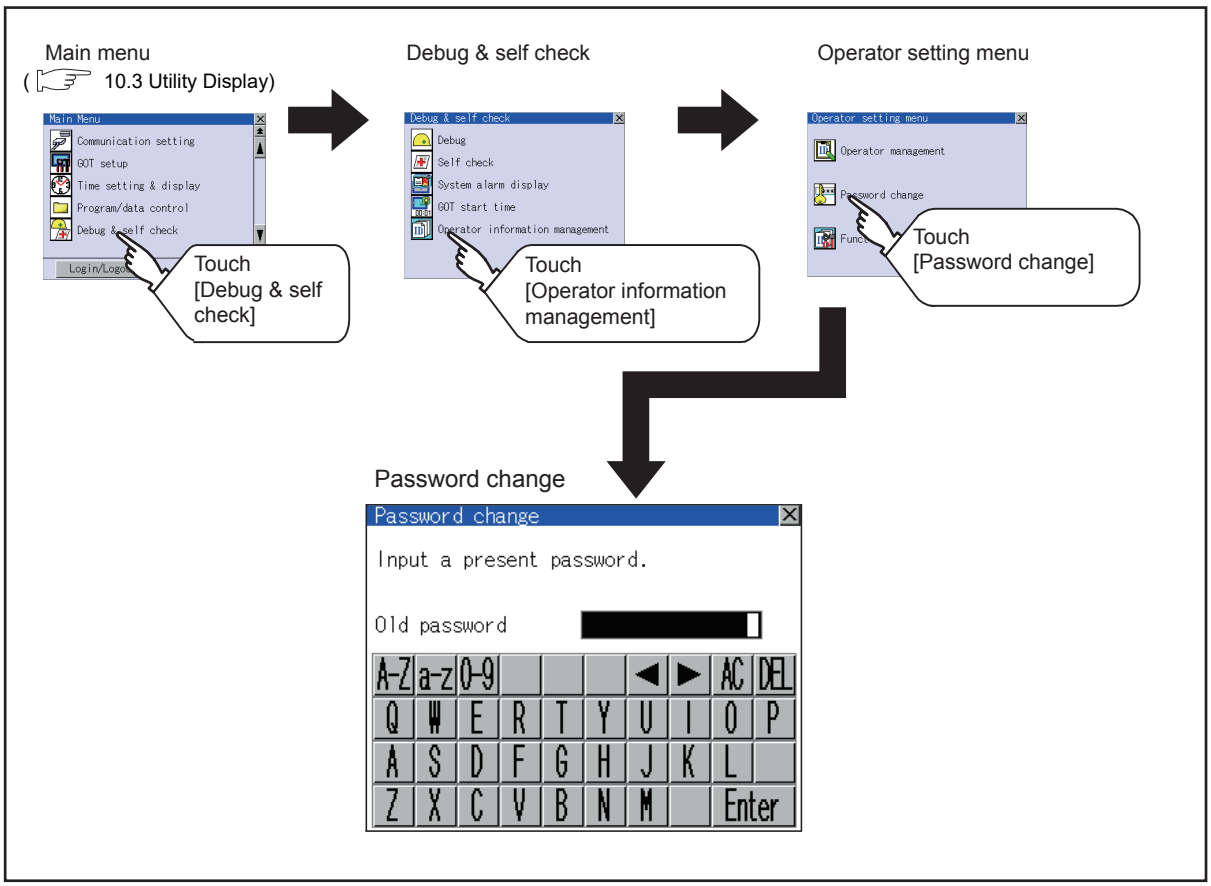

(3) Password change operation

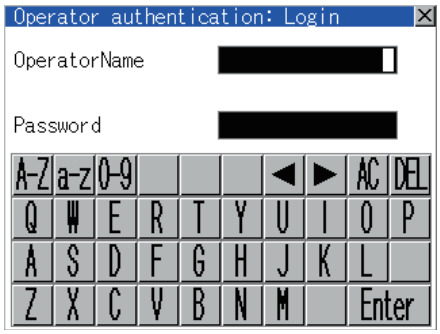

1. Log into the GOT with the operator name corresponding to the password to be changed on the Main Menu screen for the utility.

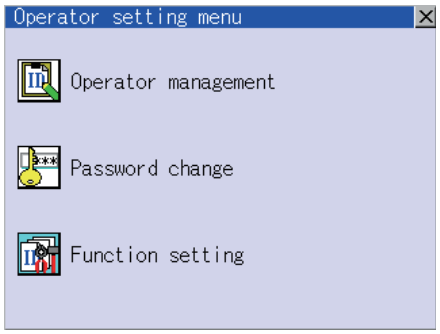

2. Touch [Password change] in the operator setting menu, and then the Password change dialog box is displayed.

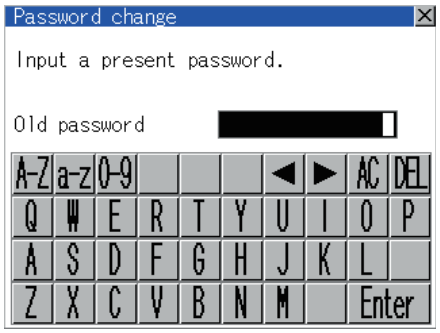

3. Input the current password on the Password change dialog box.
Character types to be input can be changed with touching the following buttons.

[A-Z] : Alphabet capital
[a-z] : Alphabet small letter
[0-9] : Numeric

When the input is completed, touch the [Enter] key.

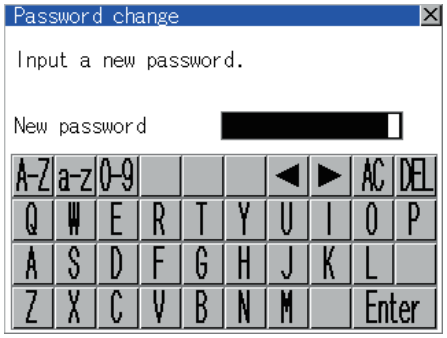

4. Input a new password.

5. After inputting a new password, input the new password again.

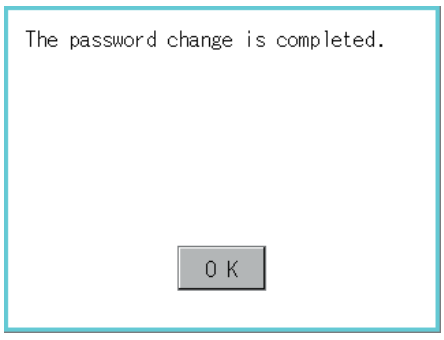

6. When the new password is correctly input, the dialog box shown left is displayed and the password is changed.

■ Function setting

(1) Function setting function

The functions for the operator information can be set.
The following items can be set.

Items	Description	Reference
Automatic logout time	The time from when the last time the GOT is operated until when you automatically log out of the GOT can be set. (1 to 60 minutes, 0 is invalid.)	14-88
Auth method	The authentication method can be switched. ([Operator name + password], [External auth (general)]) When [External auth (general)] is selected, the check box for [Operator name + password] is displayed.	14-88
Password expiration date	Set the item for regularly changing the password to be used for the operator authentication. (1 to 1000 days, 0 is invalid.) When the password is out of date after setting the password, the GOT requests the password change.	14-89
Initial position input	Set the initial position input (byte count) of external authentication ID from among the data read from the external authentication device. (0 to 1998 bytes)	14-89
Valid byte count input*1	Set the valid byte count for external authentication ID. (2 to 16 bytes)	14-89

*1 Since the GT14 Handy is not connectable with RFID, it does not correspond to the external authentication function.

(2) Display operation of function setting

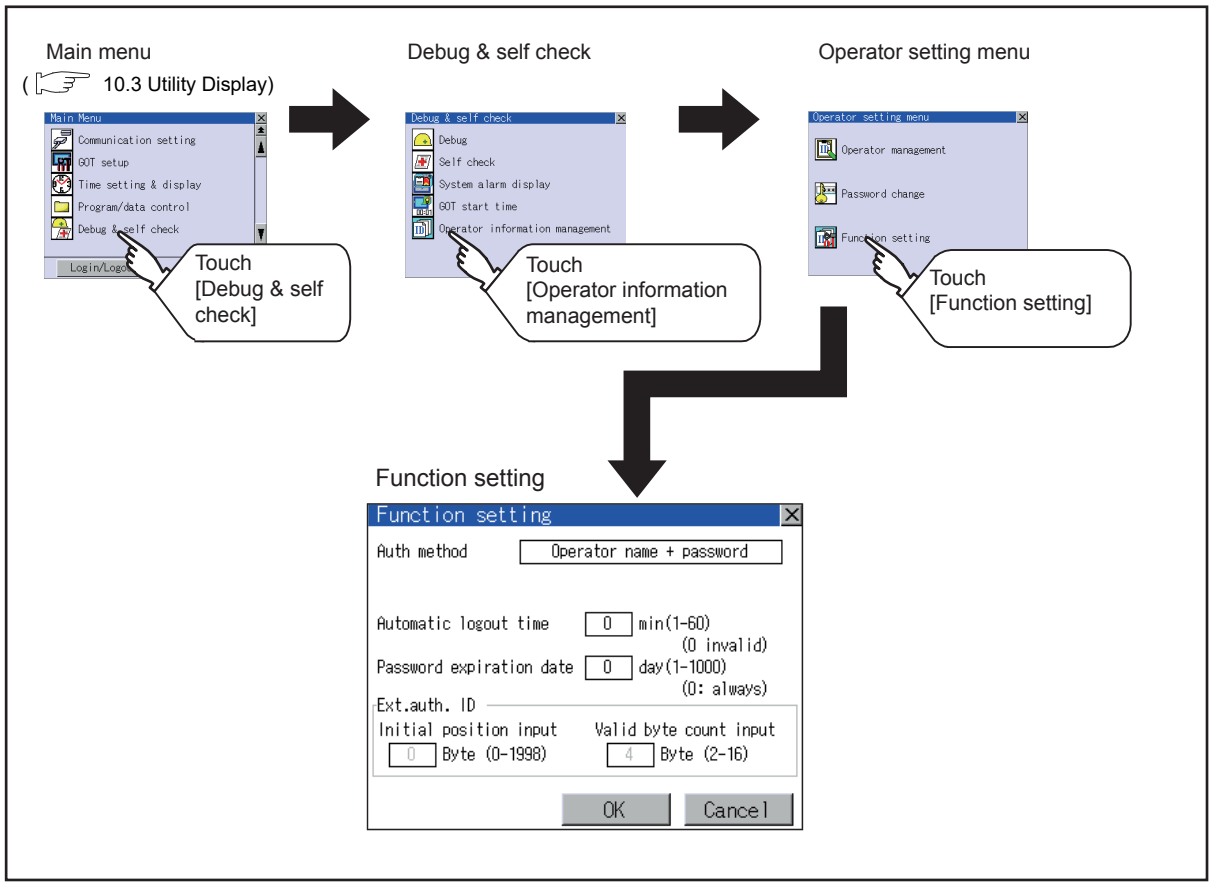

(3) Function setting operation

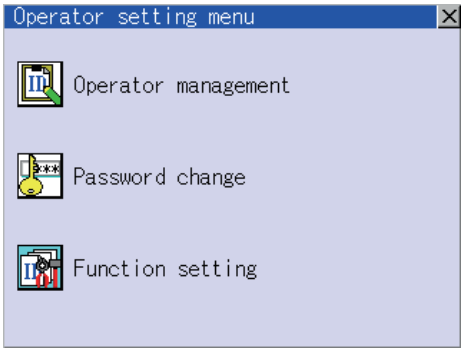

1. Touch [Function setting] in the operator setting menu, and then the Admin password authentication dialog box is displayed.

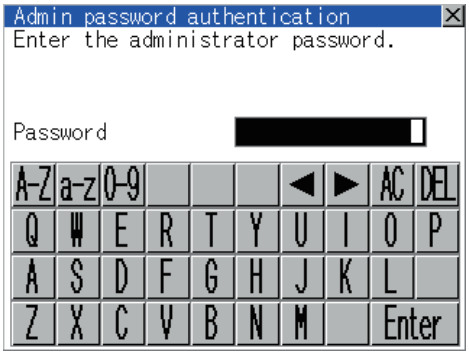

2. Input the administrator password.
Character types to be input can be changed with touching the following buttons.
A-Z : Alphabet capital
a-z : Alphabet small letter
0-9 : Numeric
When the input is completed, touch the [Enter] key.

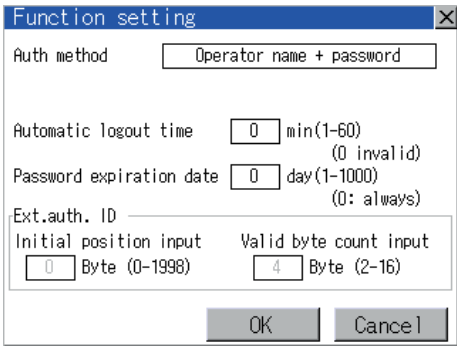

3. When the administrator password is correctly input, the Function setting screen in displayed.
Touch an item to be set.
(a) Automatic logout time
(b) Auth method
(c) Password expiration date
(d) Initial position input
(e) Valid byte count input

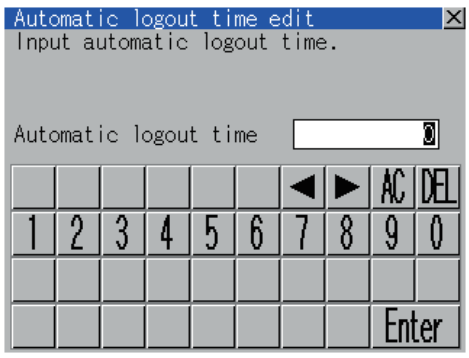

(a) Touch [Automatic logout time], and then the Automatic logout time edit dialog box is displayed. Input the time.
When the input is completed, touch the [Enter] key.

(b) Authentication method

Switch the authentication method.
Touch the item to switch the display between [Operator name + password] → [External auth (general)] → [Fingerprint auth] → [Operator name + password].

(c) Touch [Password expiration date], and then the Password expiration date edit dialog box is displayed.
Input the expiration date.
When the input is completed, touch the [Enter] key.

(d) Initial position input
Set the initial position input (byte count) of external authentication ID from among the data read from the external authentication device.

(e) Valid byte count input
Set the valid byte count for external authentication ID.
(Only available when the external authentication (general) is set as the authentication method.)

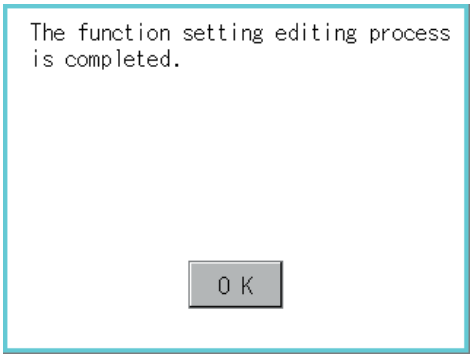

4. Touch the [OK] button after all items are input, and then the dialog box shown left is displayed and the input setting is saved.

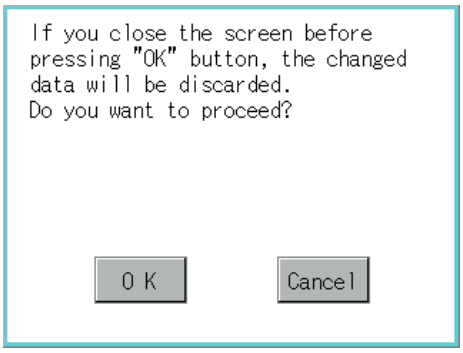

Touch the [Cancel] button or the ☒ button, and then the dialog box shown left is displayed.

■ Display example of GOT data package acquisition

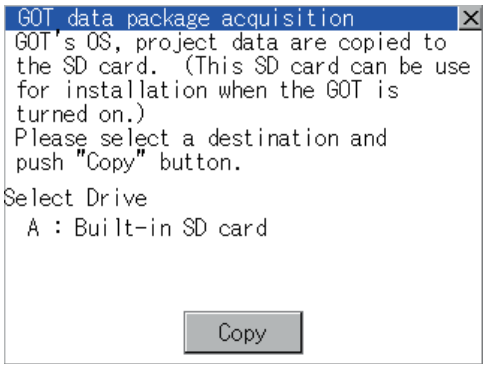

Number	Item	Description
(1)	Select drive	Displays the drive where OS and data can be copied. The [A: Built-in SD card] is not displayed when SD card is not installed. If the USB memory is not installed, [E: USB drive] is not displayed.
(2)	Copy	Touching the button starts copying.

■ GOT data package acquisition operation

(4) Display operation of GOT data package acquisition

The GOT data package acquisition copies the installed OS or data in the GOT main unit to the SD card or USB memory.

(This item explains using the A drive.)

1. Touching the drive name below [Select Drive] inverts the touched drive name.
   Touching the [Copy] button starts copying.

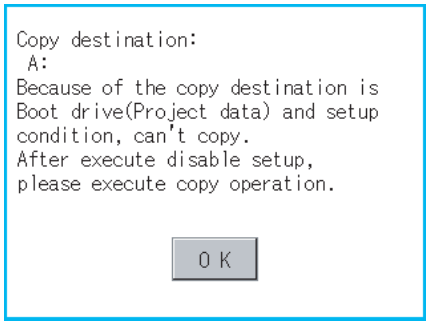

2. The display depends on the status of copy destination and setup.
   Operate with following the displayed dialog box.

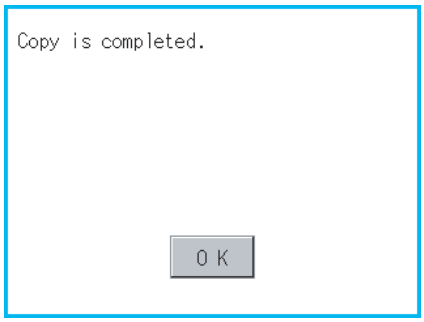

3. After copying OS and data, the dialog box for notifying the completion appears.
Touching the [OK] button closes the dialog box.

POINT

Estimation of processing time

The time required for the processing depends on conditions such as OS, data capacity, and file structure.
(Reference value)

- When the capacity is 4 Mbytes: Around 6 seconds
- When the capacity is 12 Mbytes: Around 18 seconds

(5) Precautions for operation

(a) Copying project data
If the Boot source drive and copy destination drive for project data is the same, the project data cannot be copied.
If the drives are the same, cancel the setup.

(b) When project data are copied to the GOT
If OS or project data is copied to the GOT using the SD card or USB memory created with GOT data package acquisition, the utility setting is also copied.
Check each utility setting after copying to the GOT and change the setting according to need.

(c) SD card or USB memory to be used
When performing GOT data package acquisition, do not store other data to the SD card or USB memory.
If doing so, the previous data will be unavailable.

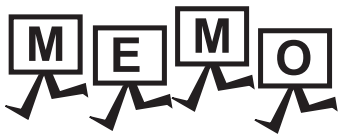
MEMO

15. GOT SELF CHECK (DEBUG AND SELF CHECK)

The GOT can display the screen for debugging and self-checking.
The following describes the functions available as the debugging and self checking functions.

Item	Description	Reference
Debug	System monitor, A list editor, FX list editor, Backup/restoration	15-1
Self check	Memory check, Display check, Touch panel check, I/O check, Ethernet status check	15-3
System alarm display	GOT error, CPU error	15-20
GOT start time	GOT start time	15-22

15.1 Debug

In this manual, the overview of the debugging function is described.
For display contents and operation procedure of debugging, refer to the following manual.

☞ GOT1000 Series Extended/Option Functions Manual for GT Works3

The following describes the functions available as the debugging function.

Item	Description	Reference
System monitor	The device of PLC CPU and buffer memory of intelligent function module can be monitored or tested.	15-1
A list editor	The sequence program of ACPU can be list edited.	15-1
FX list editor	The sequence program of FXCPU can be list edited.	15-1
Backup/restoration	Data can be backed up/restored from the controller to GOT, or backup data can be deleted.	15-2

15.1.1 System monitor

System monitor allows monitoring and changing the devices in controllers.
For display contents and operation procedure, refer to the following manual.

☞ GOT1000 Series Extended/Option Functions Manual for GT Works3

15.1.2 A list editor

MELSEC-A list editor allows changing the sequence programs in ACPU/QCPU (A mode).
For display contents and operation procedure, refer to the following manual.

☞ GOT1000 Series Extended/Option Functions Manual for GT Works3

15.1.3 FX list editor

FX list editor allows changing the sequence programs in an FX PLC.
For display contents and operation procedure, refer to the following manual.

☞ GOT1000 Series Extended/Option Functions Manual for GT Works3

15.1.4 Backup/restoration

■ Display operation of Backup/restoration

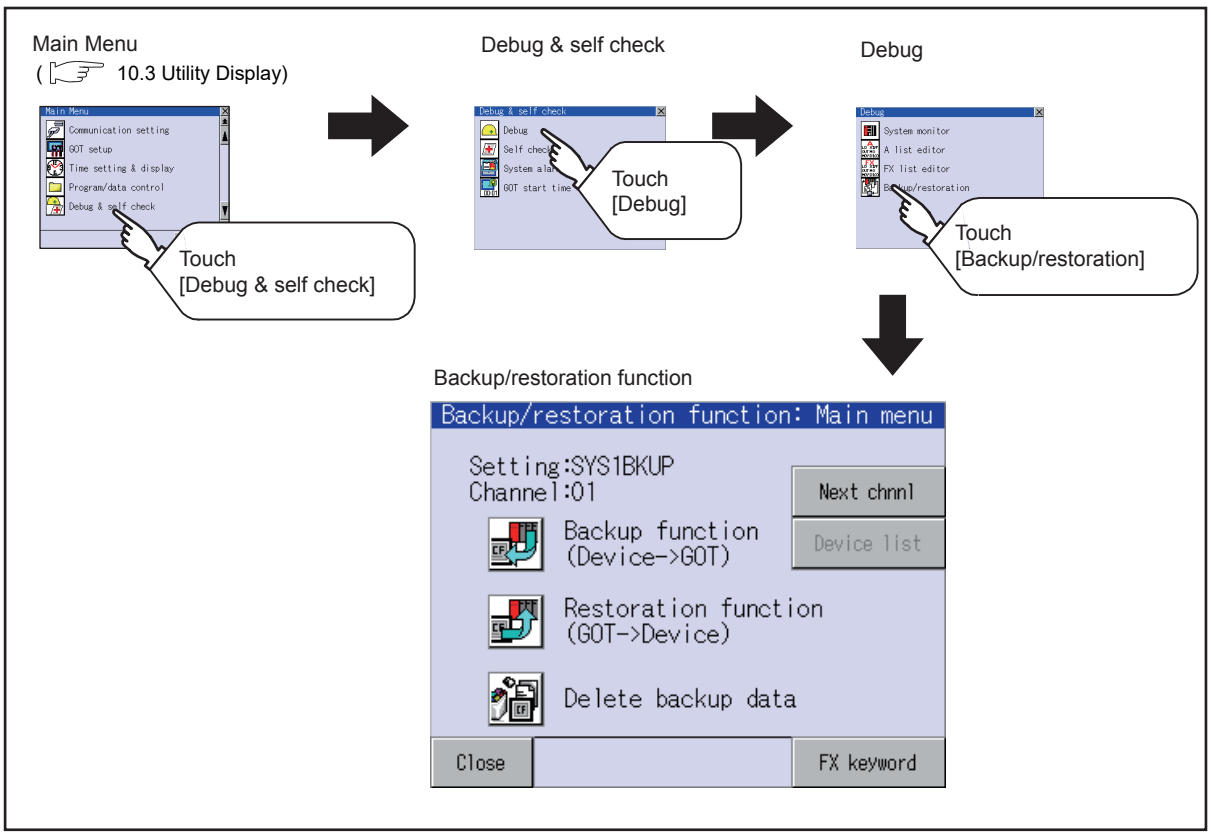

■ Operation of Backup/restoration

Backup/restore data from the controller to GOT, or delete backup data with the backup/restoration.
GOT data package acquisition is also possible.
For details of backup/restoration, refer to the following manuals.

☞ GOT1000 Series Extended/Option Functions Manual for GT Works3

15.2 Self Check

The following describes the functions available as the self check function.

Item	Description	Reference
Memory check	Carries out write/read check of the SD card, USB memory, built-in flash memory, or internal SRAM. [Password] 5 9 2 0	15-3
Drawing check	Carries out missing bit check, color check and drawing check.	15-6
Font check	Displays the character data on the screen to check visually.	15-10
Touch panel check	Checks whether there are no dead zone area in the Touch key minimum unit (2 dots × 2 dots).	15-12
I/O check	Carries out RS-232, RS-422 connecting target confirmation and self-loopback check.	15-14

15.2.1 Memory check

■ Memory check function

Memory check function carries out the write/read check of A drive (Built-in SD Card), C drive (Flash Memory), D drive (Internal SRAM) and E drive (USB memory).

Function	Description
A drive memory check	Checks whether the memory (Built-in SD card) of the A drive can be read/written normally.
C drive memory check	Checks whether the memory (Flash Memory) of the C drive can be read/written normally.
D drive memory check	Checks whether the memory (Internal SRAM) of the D drive can be read/written normally.
E drive memory check	Checks whether the memory (USB memory) of the E drive can be read/written normally.

■ Display operation of Memory check

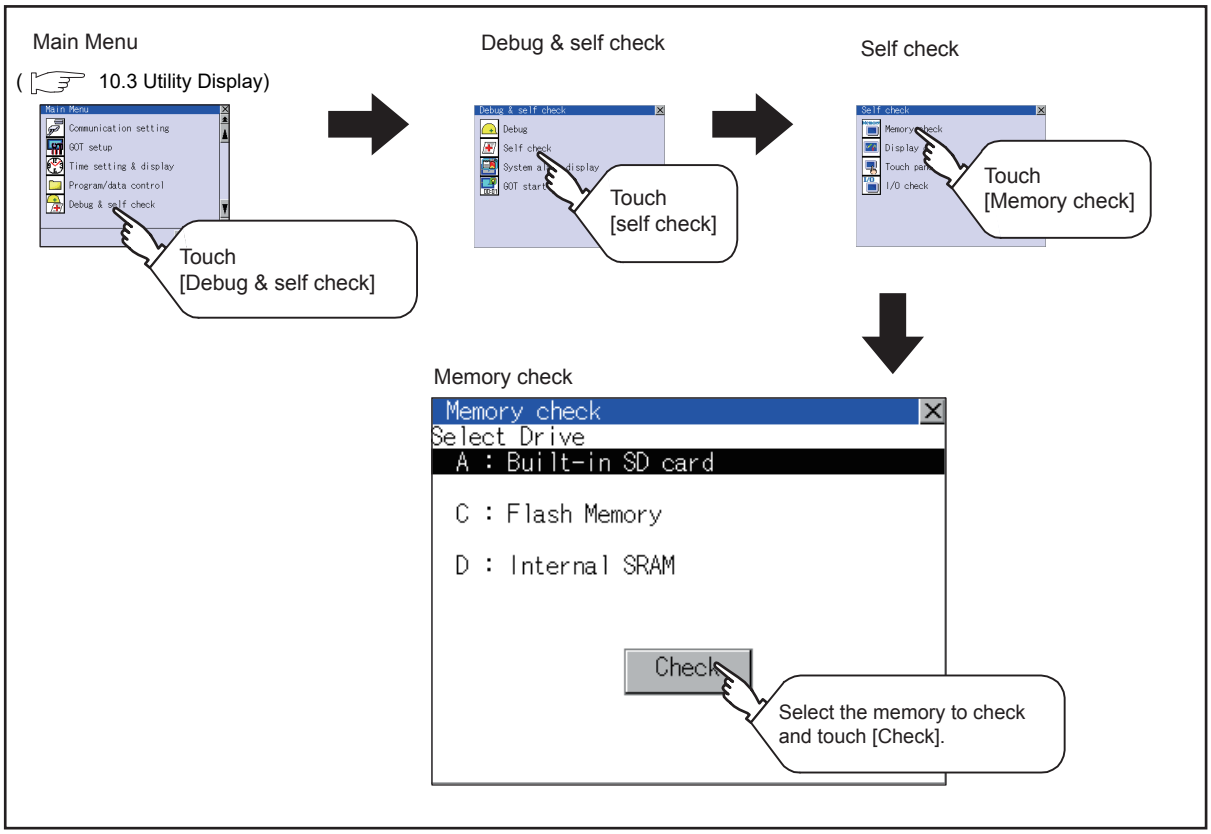

■ Memory check operation

Carries out write/read check of memory.

POINT

When drive is not displayed

When the drive (memory) to check is not displayed, confirm the mounting procedure or memory type with reference to the following.

☞ 6.1 SD Card
6.2 USB Memory

When no faults are found in mounting, etc, a memory failure may be arisen.
Replace the SD card or USB memory or built-in flash memory (C drive).
For details of built-in flash memory, contact your local Mitsubishi (Electric System) Service.

The following example explains about Memory Check using built-in flash memory (C drive).
For the Built-in SD card (A drive) memory check, install the SD card before carrying out the same key operations as built-in flash memory. For the USB drive (E drive) memory check, install the USB memory before carrying out the check operations.

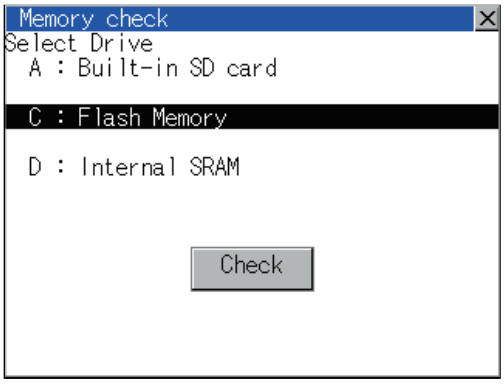

1. Select a drive to check in the Select Drive screen in Memory check and touch [Check] button.

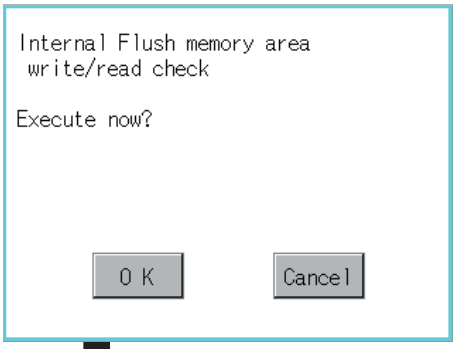

2. Touching [Check] button displays the dialog box on the left.
Selecting [OK] button displays the numeric keyboard window.
Selecting [Cancel] button returns to the initial menu.

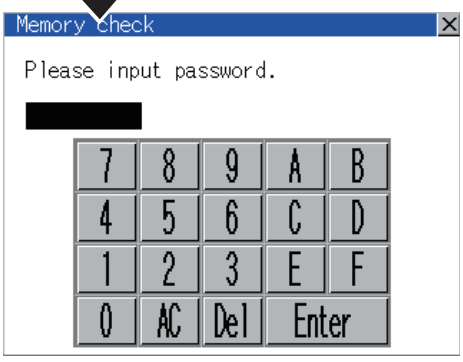

3. Touch to input password(5 9 2 0) and touch [Enter] key.
Touching [Enter] key executes read/write check for the built-in flash memory, which is completed in around 10 seconds.

POINT

(1) Password change

The password cannot be changed.

When input password error, the cancel dialog box is displayed.

Touching [OK] returns to the Memory check screen.

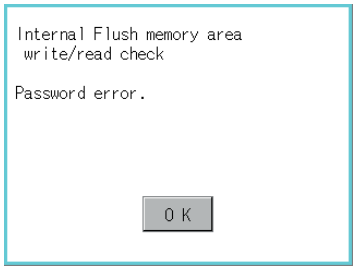

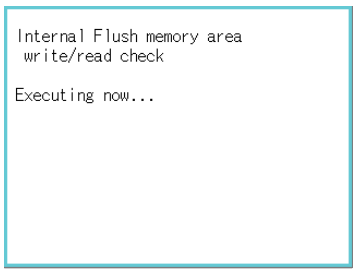

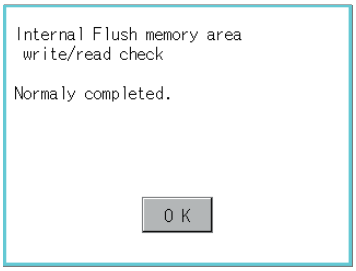

(2) When error is found in memory

When error is found by memory check, the dialog box indicating the area in which the error occurred is displayed.

In case of error, contact your local Mitsubishi (Electric System) Service.

Touching [OK] returns to the Memory check screen.

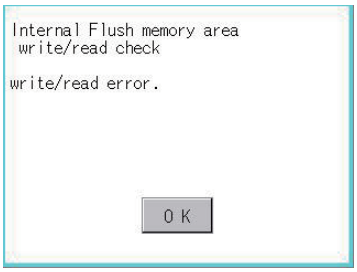

15.2.2 Drawing check

■ Drawing check function

The drawing check function carries out display checks as missing bit check, color check, basic figure display check, move check among screens.

■ Display operation of drawing check

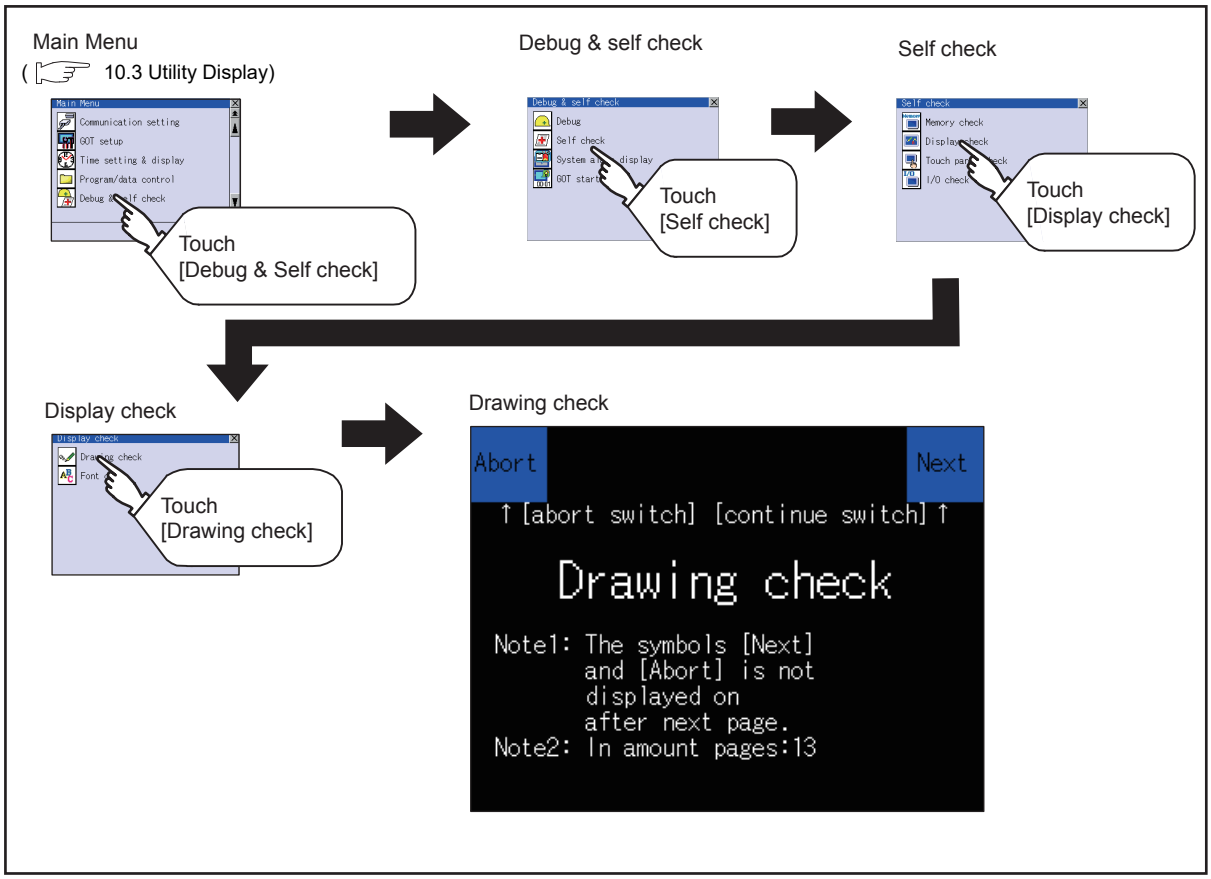

POINT

Notes on drawing check

Missing bits is occurred in the following cases.

- There are parts drawn in different color with the filled color.
- There are parts of basic figure and drawing patterns which are not drawn according to the layout and procedures described in " 15.2.2 ■Display operation of drawing check

When missing bits occurs, contact your local Mitsubishi (Electric System) Service.

■ Drawing check operation

The screen for drawing check can be displayed by touching [Drawing check] on the Display check menu.

(1) Before execute drawing check

Touching the upper right part of the screen proceeds to the next check in each step during drawing check.
Touching the upper left part of the screen returns to the [Display check] screen.
For GT1455-Q (65536 colors), the screen is displayed in color (blue, black, red, purple, green, light blue, yellow and white).
Also, for GT1450-Q (monochrome 16 scales), the screen color is reduced to monochrome 16 scales and displayed.
This section explains in the case of GT1455-Q (65536 colors).

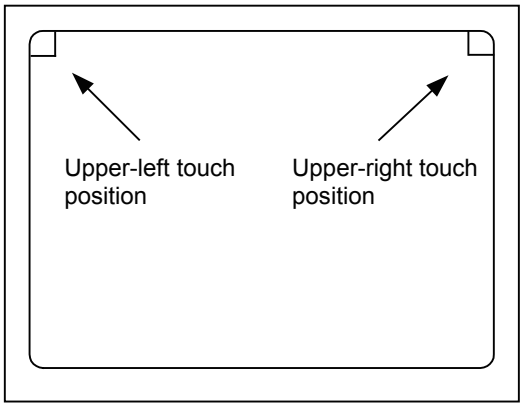

(a) Missing bit, Color Check

By touching the upper-right part of the screen, the entire screen color changes in the following order: blue → black → red → purple → green → light blue → yellow → white.
Check missing bit and color visually.

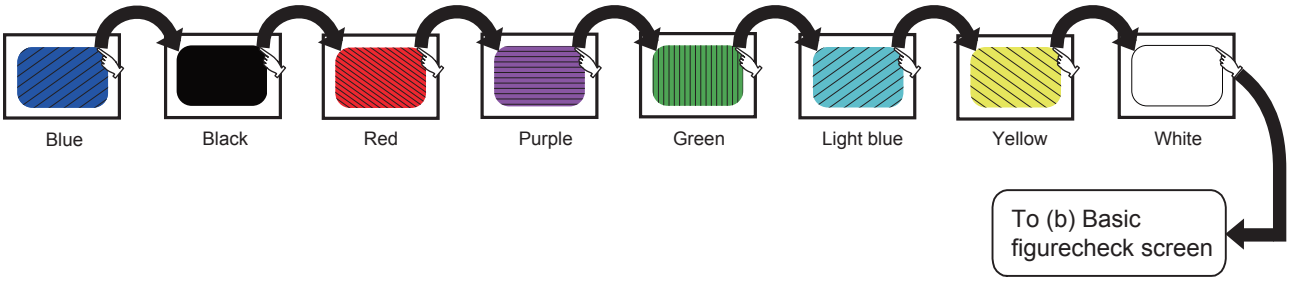

Touching the upper right part of the screen at the final color (white screen) displays the following (b) Basic figure check screen.

(b) Basic figure check

Check whether there is no shape transformation of basic figure or display losses.
The basic figure drawn has 4 types: 1. Filled circle, 2. Line, 3. Rectangle, 4. Ellipse.

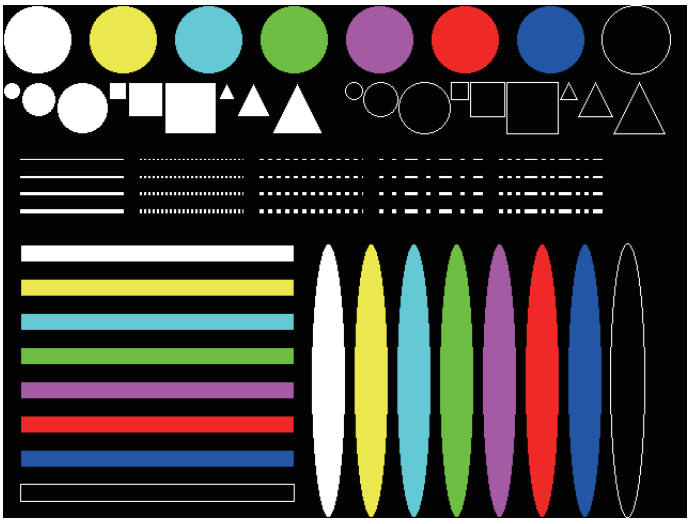

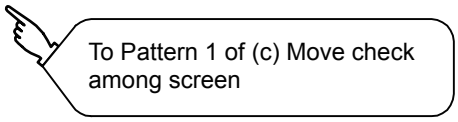

(c) Move check among screens

- Pattern 1: Shape transformation, color check
  The drawn figures are displayed in order and at regular intervals.
  If the shape and color are displayed visually in order, it is normal

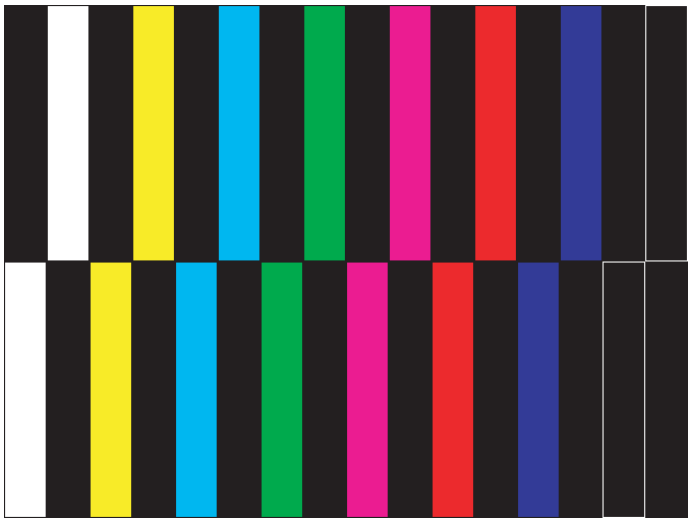

Pattern 1

- Pattern 2: Shape transformation, color check
  The drawn figures are displayed in order and at regular intervals.
  If the shape and color are displayed visually in order, it is normal

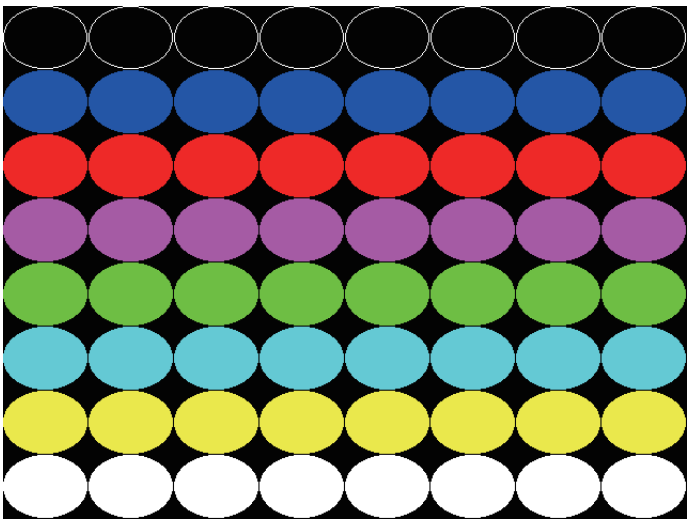

Pattern 2

- Pattern 3: Shape transformation, color check
  The overlapped shapes of pattern 1 and pattern 2 are displayed.
  If the shape and color are displayed visually in order, it is normal.

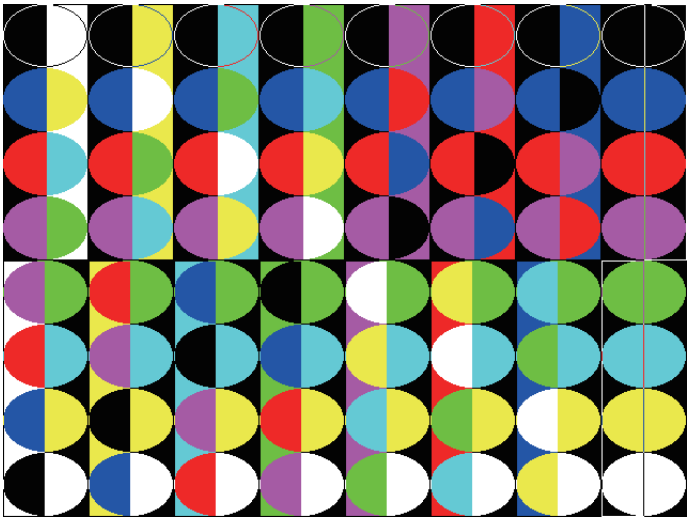

- Pattern 4: Shape check
  The drawn figures are displayed in order and at regular intervals.
  If the shape and interval are displayed visually in order, it is normal.
  Touching the upper right part of the screen returns to the [Display check] screen

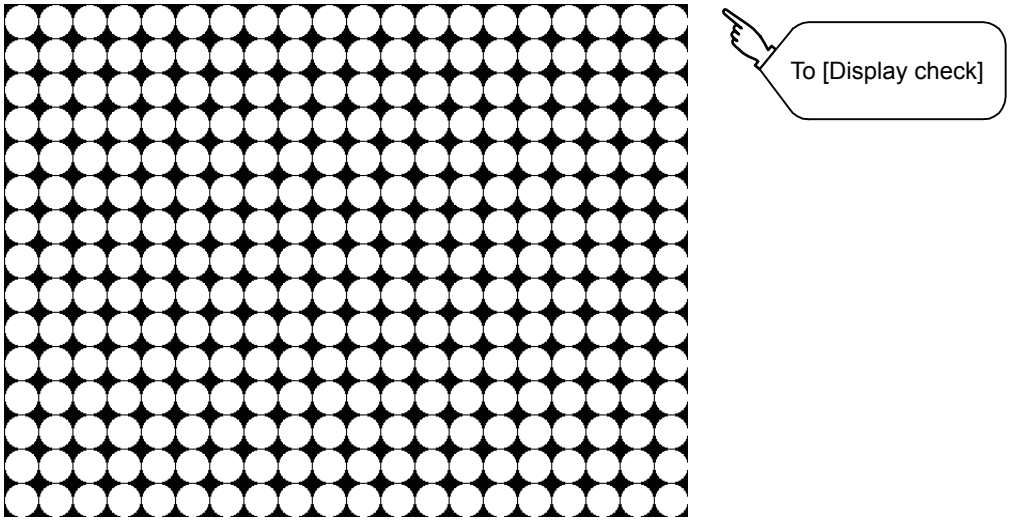

The main screen image after the screen information read and write is executed

15.2.3 Font check

■ Font check function

The font check is a function which confirms fonts installed in GOT. The character data of the font is displayed on the upper left part of the screen one by one.

■ Display operation of Font check

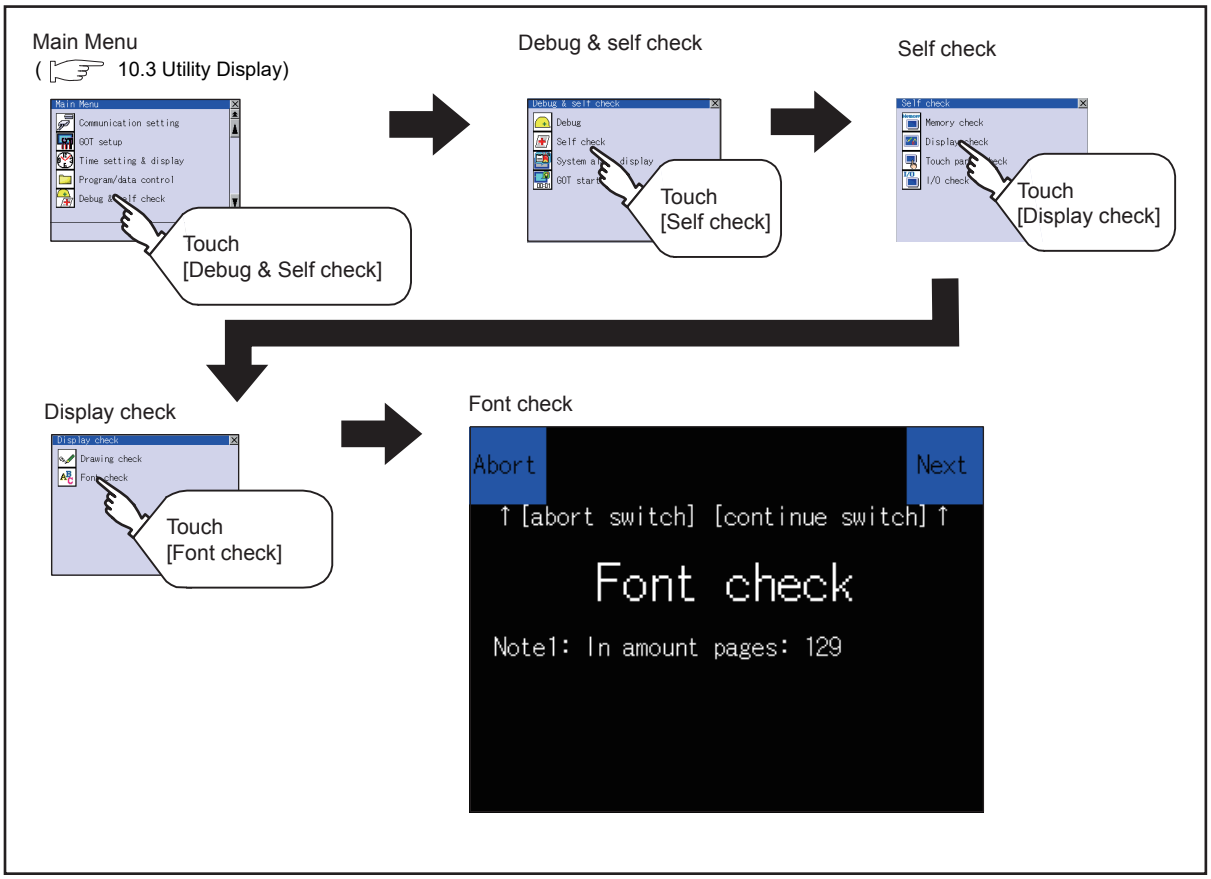

POINT

Notes on Font Check

Judged as normal if the following characters are correctly displayed. (UNICODE)

- Alphabetic characters etc. : 0x0000 to 0x04F9 (From basic Latin to Kirill)
- Hangul characters : 0xAC00 to 0xD7A3 (Hangul / Hangul auxiliary)
- Kanji : 0x4E00 to 0x9FA5 (CJK integrated Kanjis)

If the characters above are not displayed correctly, the fonts may not be installed. Install the standard monitor OS again.

■ Font check operation

Font check starts by touching [Font Check] in the [Display check] screen.
The character data of the built-in font (in the built-in flash memory) can be checked visually to confirm the font drawings by displaying the character data serially on the screen.

(1) Before execute font check

Touching the upper right part of the screen proceeds to the next check in each step during Font check.
Touching the upper left part of the screen returns to the [Display check] screen.

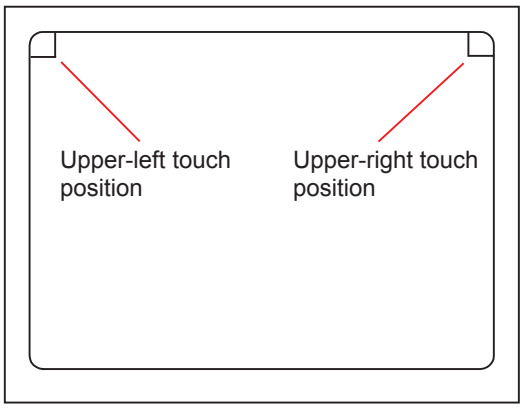

The installed font data is displayed by touching the upper right part of the screen.

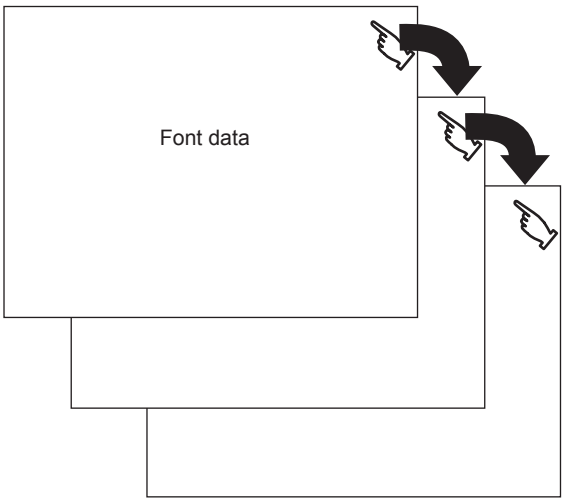

POINT

Option fonts

To display optional fonts, the option font installation is required.
The option fonts are displayed at the end.

15.2.4 Touch panel check

■ Touch panel check function

Touch panel check function checks whether there are no dead zone area in 2 dots × 2 dots.

■ Display operation of Touch panel check

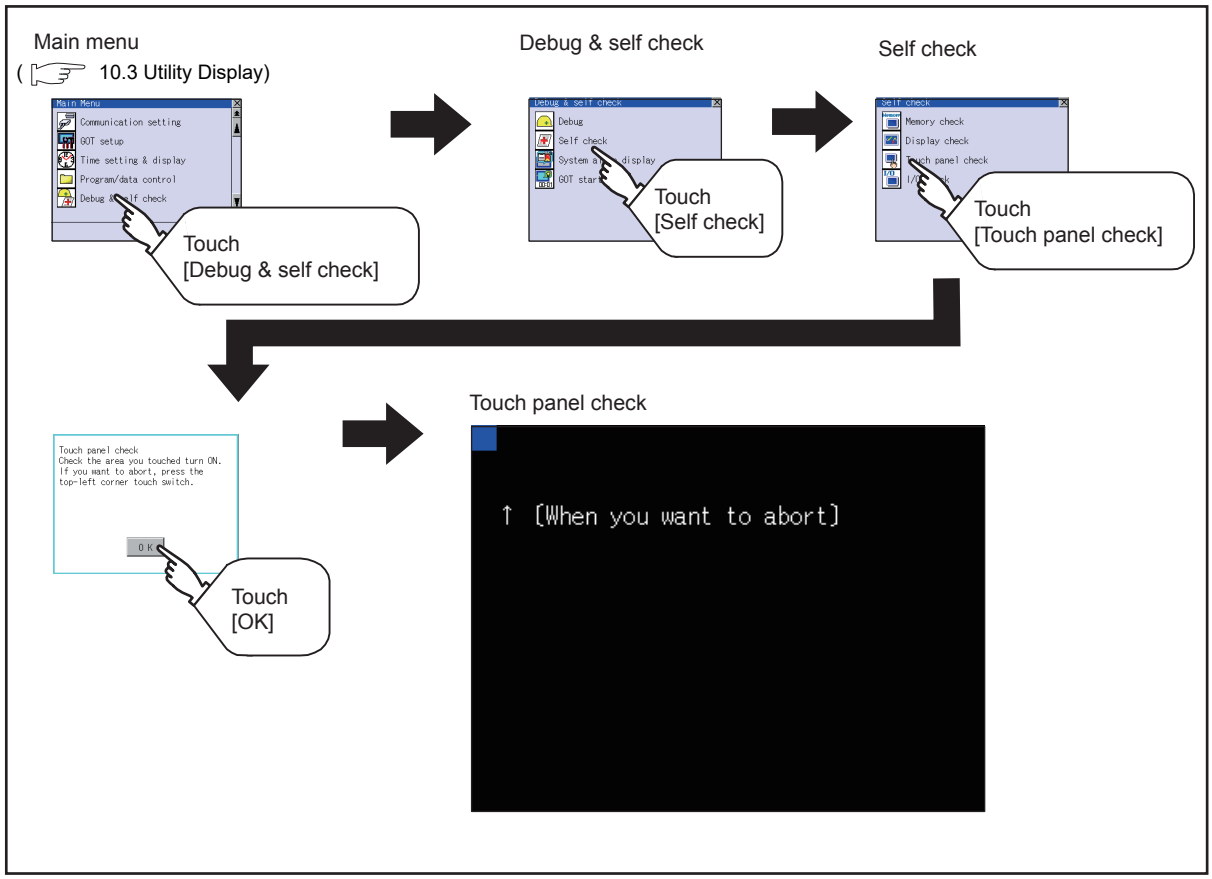

POINT

Notes on Touch panel check

If the touched part is not filled with yellow color, there are the following two possible causes.

1. Display part failure
2. Touch panel failure

In that case, contact your local Mitsubishi (Electric System) Service.

■ Touch panel check operations

Touching [Touch panel check] of self-check displays a black-filled screen over the entire screen area.

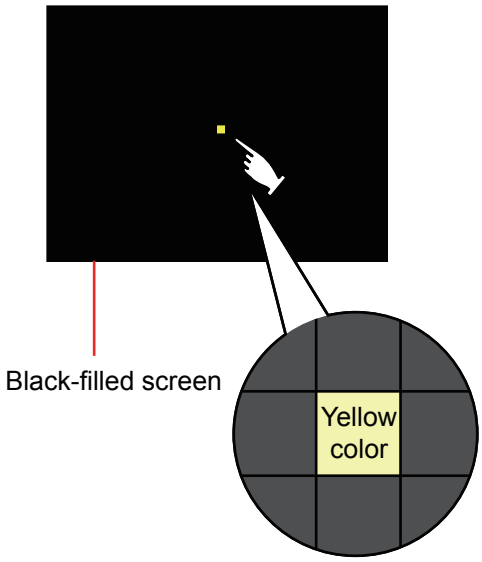

1. Touch a part of the screen.
   The touched part becomes a yellow-filled display.

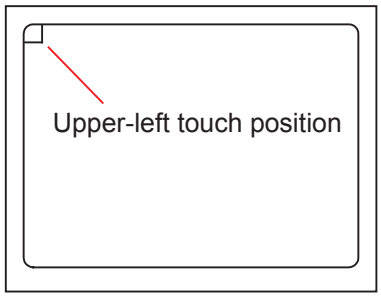

2. Touching the upper left part returns to the self-check.

POINT

Checking the upper left part of the screen

Only the upper left part of the screen cannot be filled with yellow.
If returns to the self-check by touching the upper left part, judge that the upper left area operates normally.

15.2.5 I/O check

■ I/O check function

The I/O check is a function which checks whether GOT and PLC can communicate with each other.
If I/O check ends normally, the communication interface and the connection cable hardware are normal.
To execute I/O check, the communication driver has to be installed in GOT in advance from GT Designer3.
Note that the GOT restarts when this function is performed.
For the details related to the installation of the communication driver, refer to the following.

☞ GT Designer3 Version1 Screen Design Manual (Fundamentals)

(1) Communication drivers inapplicable to I/O check
When the following communication drivers are used, the I/O check cannot be executed.

Connection type		Communication driver
Connection to MITSUBISHI PLC	Ethernet connection	Ethernet(MELSEC), Q17nNC, CRnD-700
Connection to YASKAWA PLC		YASKAWA GL/CP9200(SH/H)/CP9300MS, Ethernet(YASKAWA), Gateway
Connection to YOKOGAWA PLC		YOKOGAWA FA500/FA-M3/STARDOM, Ethernet(YOKOGAWA), Gateway
Connection to ALLEN-BRADLEY PLC		Ethernet(AB), Gateway
Connection to SIEMENS PLC		SIEMENS S7, SIEMENS S7-200, SIEMENS S7-300/400
Microcomputer connection		Computer
Inverter connection		FREQROL 500/700
MODBUS(R)/TCP connection		MODBUS/TCP
Connection to Azbil control equipment		Azbil SDC/DMC
Connection to RKC temperature controller		RKC SR Mini HG (MODBUS)

■ Display operation of I/O Check

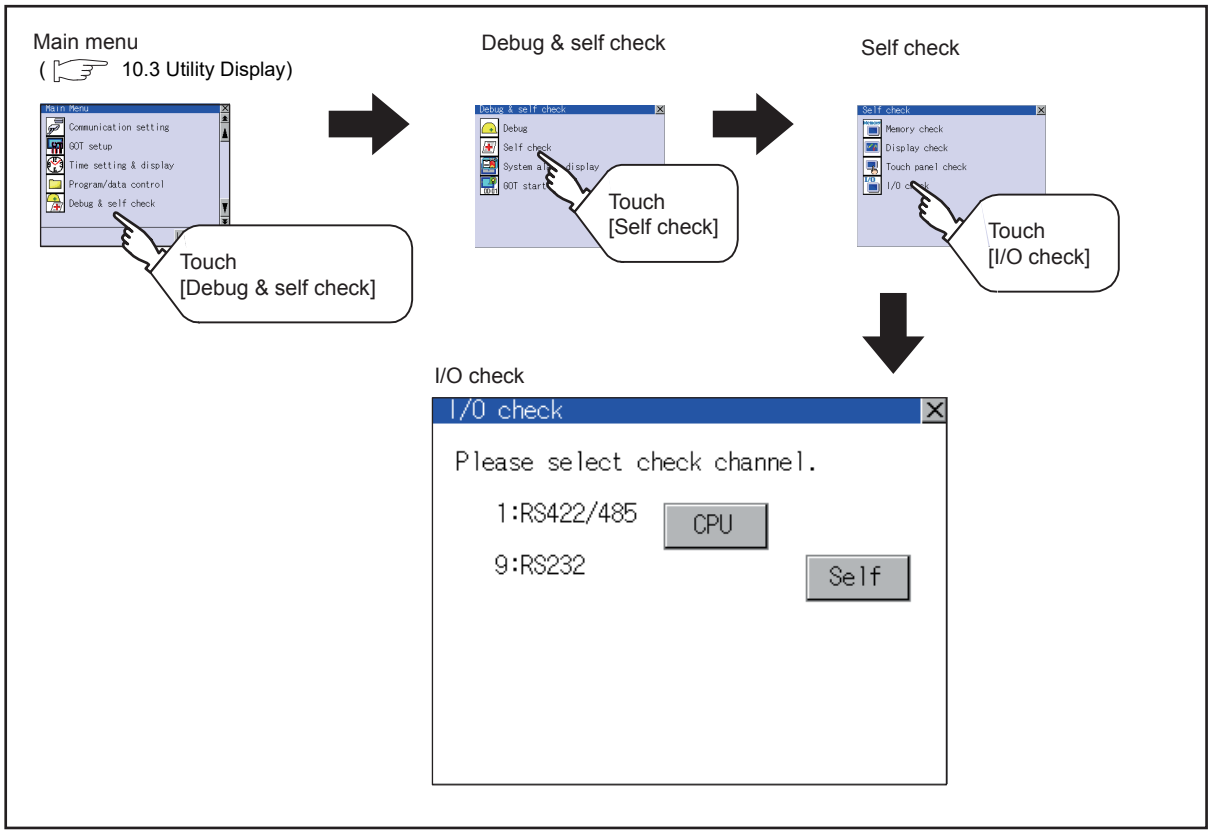

■ I/O check operation

(1) Connecting target confirmation

Touching [CPU] button carries out the connecting target confirmation communication check.

1. After the CPU communication starts normally, the dialog box mentioned left notifying that it is on checking, until the connecting target confirmation communication ends normally.

2. When the connecting target confirmation communication ends, its result is notified by dialog box. If the connecting target confirmation communication ends normally, the dialog box notifying of the normal termination mentioned left is displayed. Touching [OK] button after confirming the result returns to [I/O check].

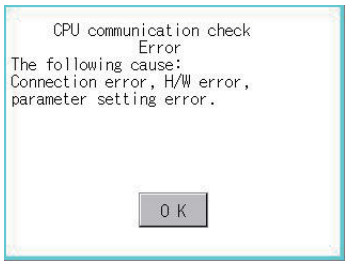

If the dialog box mentioned left is displayed after selecting connecting target confirmation or during CPU communication check, confirm the following.

- No misconnection with CPU
  (☞GOT1000 Series Connection Manual for GT Works3)
- No missettings of parameter
  (☞ 11.2 Communication Detail Setting)
- No hardware error.
  (☞ 20. TROUBLESHOOTING)

Touching [OK] button after confirming the result returns to [I/O check].

(2) Self-loopback

Touching [Self] carries out the hardware check of RS-232 interface.

When use a connector conversion box

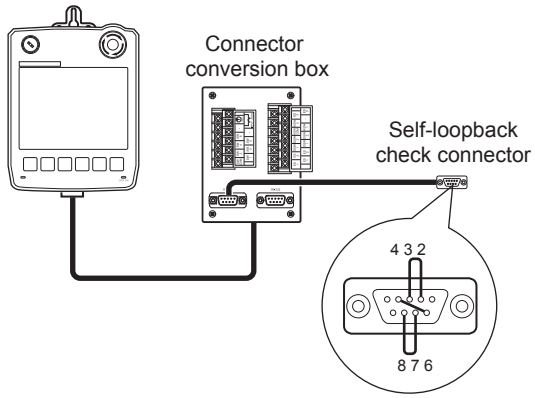

When do not use a connector conversion box

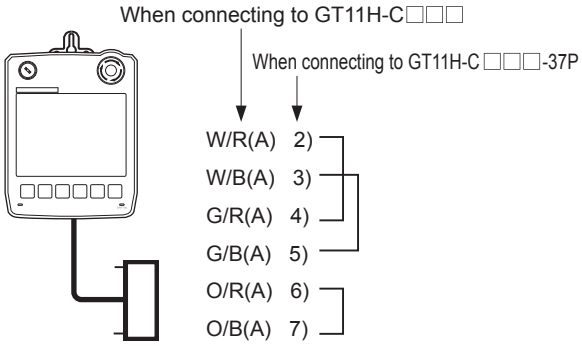

1. For preparation for the self-loopback communication check, insert the connector for self-loopback check (Customer purchased) shown in the diagram left in the RS-232 interface.
For this connector, short 2 and 3 pins, 7 and 8 pins and 4 and 6 pins, respectively.

In the communication setting of the GOT utility, set the channel number for the RS-232 interface to 0 ([None]).

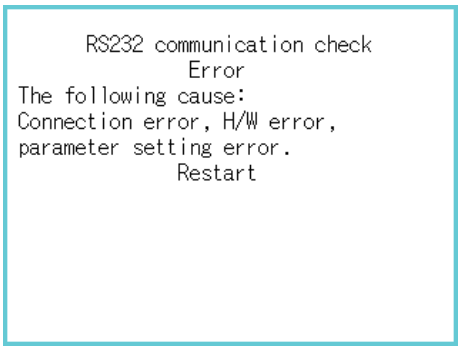

2. After selecting [Self], the transferred data and received data are verified through the self-loopback connector. When the GOT cannot receive the data during the data transmission, the dialog box shown left appears and the GOT restarts in five seconds. When the dialog box shown left appears, check the following.
   - Check if the pins of the connector for self-loopback check are incorrectly shorted.
   - Check if the channel number for the RS-232 interface is set to 0 ([None]) in the communication setting of the GOT utility.
     (11.1.3 Communication setting contents)
   - Check if the hardware has no problems.
     (20. TROUBLESHOOTING)

3. During check, the dialog box shown left is displayed.

4. When the all checks ended normally, the dialog box shown left is displayed. And the GOT restarts in five seconds.

5. When an error occurs, the dialog box that shows the GOT abnormal termination and the byte with the error appears, and then the GOT restarts in five seconds.
When the dialog box shown left appears, check the following.
- Check if the hardware has no problems.
  (☞ 20. TROUBLESHOOTING)

15.2.6 Ethernet status check

■ Ethernet status check function

Ethernet status check is a function that sends a ping to check the connection status with the equipment on the Ethernet.

■ Display operation of Ethernet status check

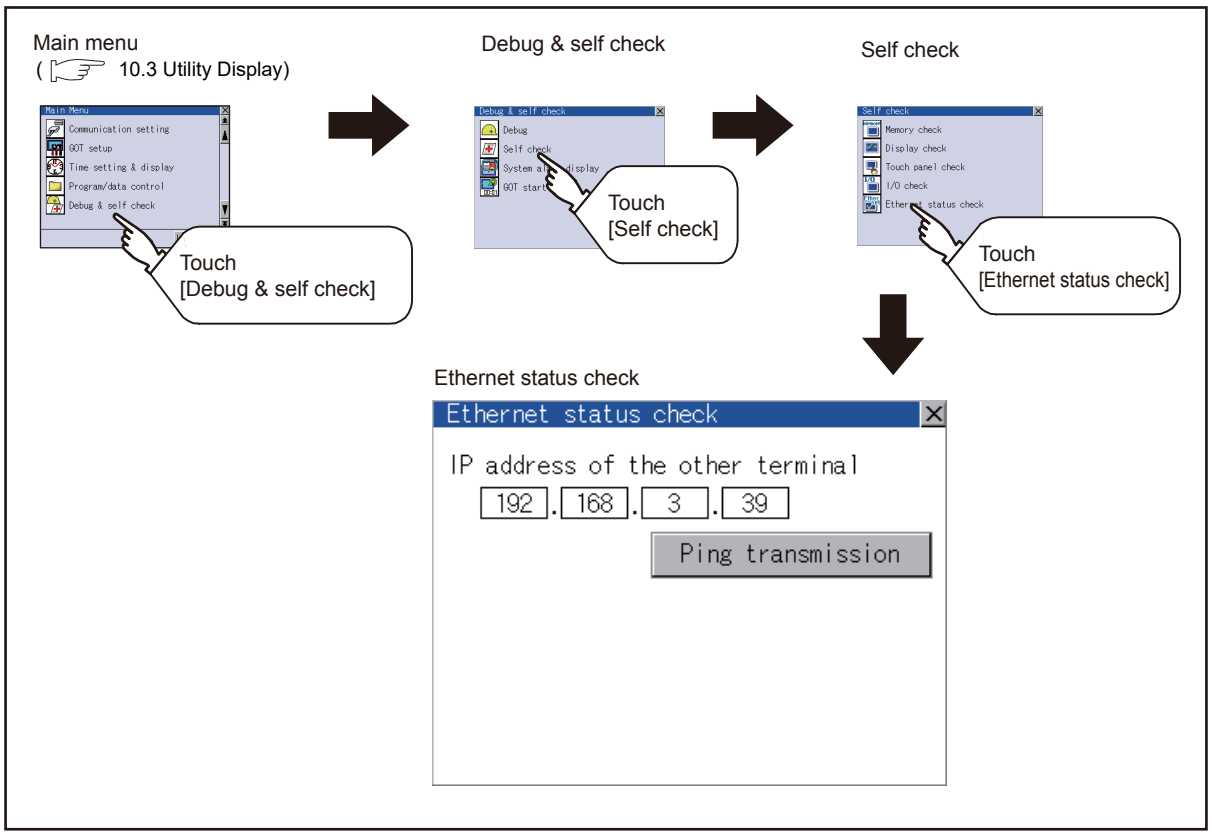

■ Operation of Ethernet status check

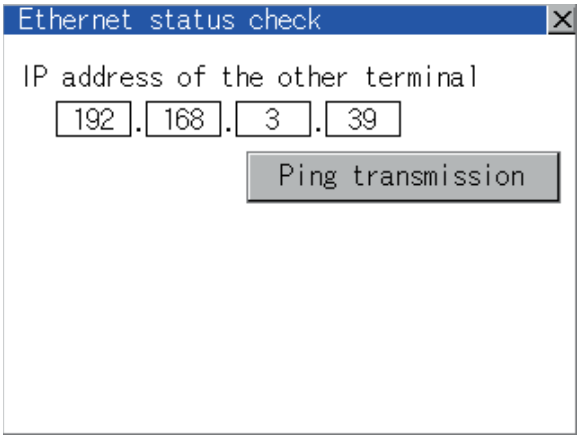

1. If touch the select button of [IP address of the other terminal], a keyboard is displayed. Enter the IP address of the other terminal with the keyboard. <Default: 192.168.3.39>

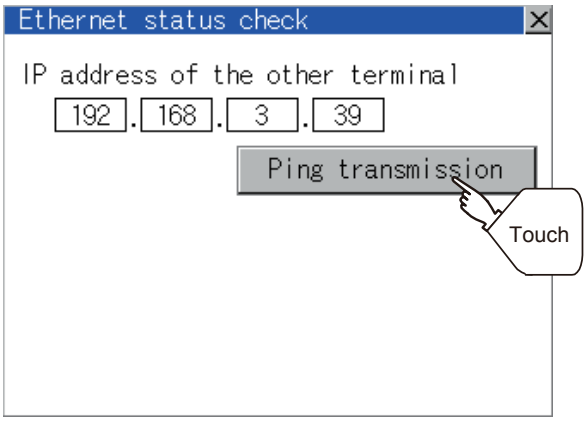

2. If touch the [Ping transmission] button, a ping is sent to the IP address entered in [IP address of the other station].
The timeout time is about 5sec.
- When GOT and PLC are in communication
  The dialog box showing [Response received.] is displayed.
- When a communication error occurs
  The dialog box showing [Timeout occurred.] is displayed.

15.3 System Alarm Display

■ System alarm function

System alarm is the function to display error code and error message when an error occurs in GOT, controller or network.
System alarms can be reset on the System alarm display screen.
For details of system alarm, refer to the following manual.

☞ GT Designer3 Version1 Screen Design Manual (Fundamentals)

■ Display operation of System alarm display

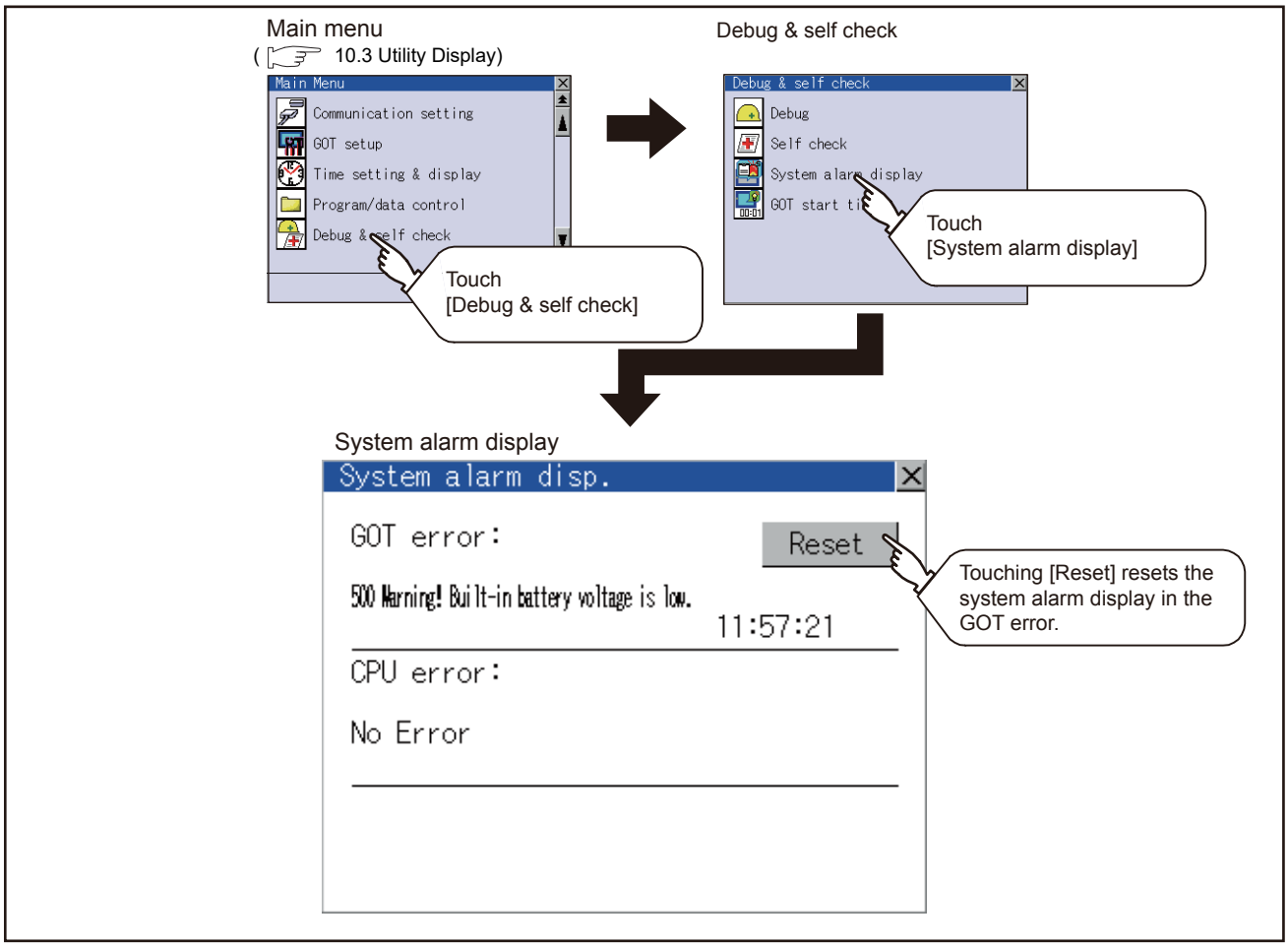

■ Operation of system alarm display

(1) System alarm display resetting

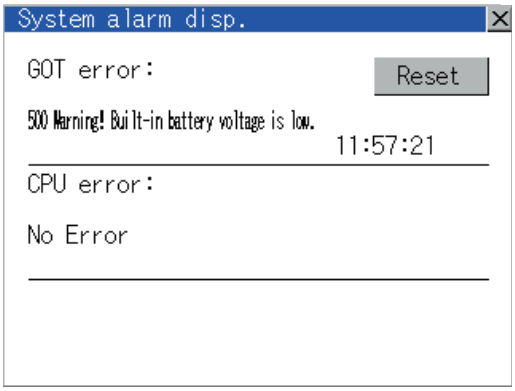

1. Eliminate each cause of the system alarm being occurred.
Error causes can be identified by the error code, error message and channel No. displayed on the System alarm screen.
(20. TROUBLESHOOTING)

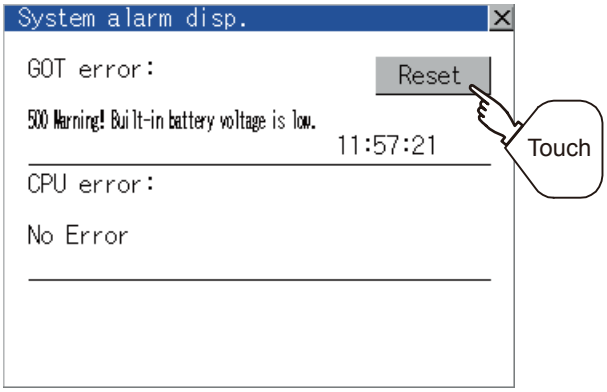

2. A method for resetting system alarm depends on an error.
   - GOT error
     Touch [Reset] button to reset system alarms.
   - CPU error and Network error
     The system alarm is automatically reset after its cause is eliminated.

POINT

(1) Before resetting the system alarm display in the GOT error
Eliminate the system alarm cause before resetting the system alarm display in the GOT error.
If not eliminated, the system alarm display in the GOT error will not be reset even after the reset operation.

(2) Processings with reset operation
The following data in the system information are also reset.
- GOT error code (Write device)
- GOT error detection signal (System Signal 2-1.b13)

15.4 GOT start time

■ GOT start time function

GOT start time is the function to display the following date and time.

- Start time of GOT
- Current time of GOT
- Operating hours of GOT

■ Display operation of GOT start time

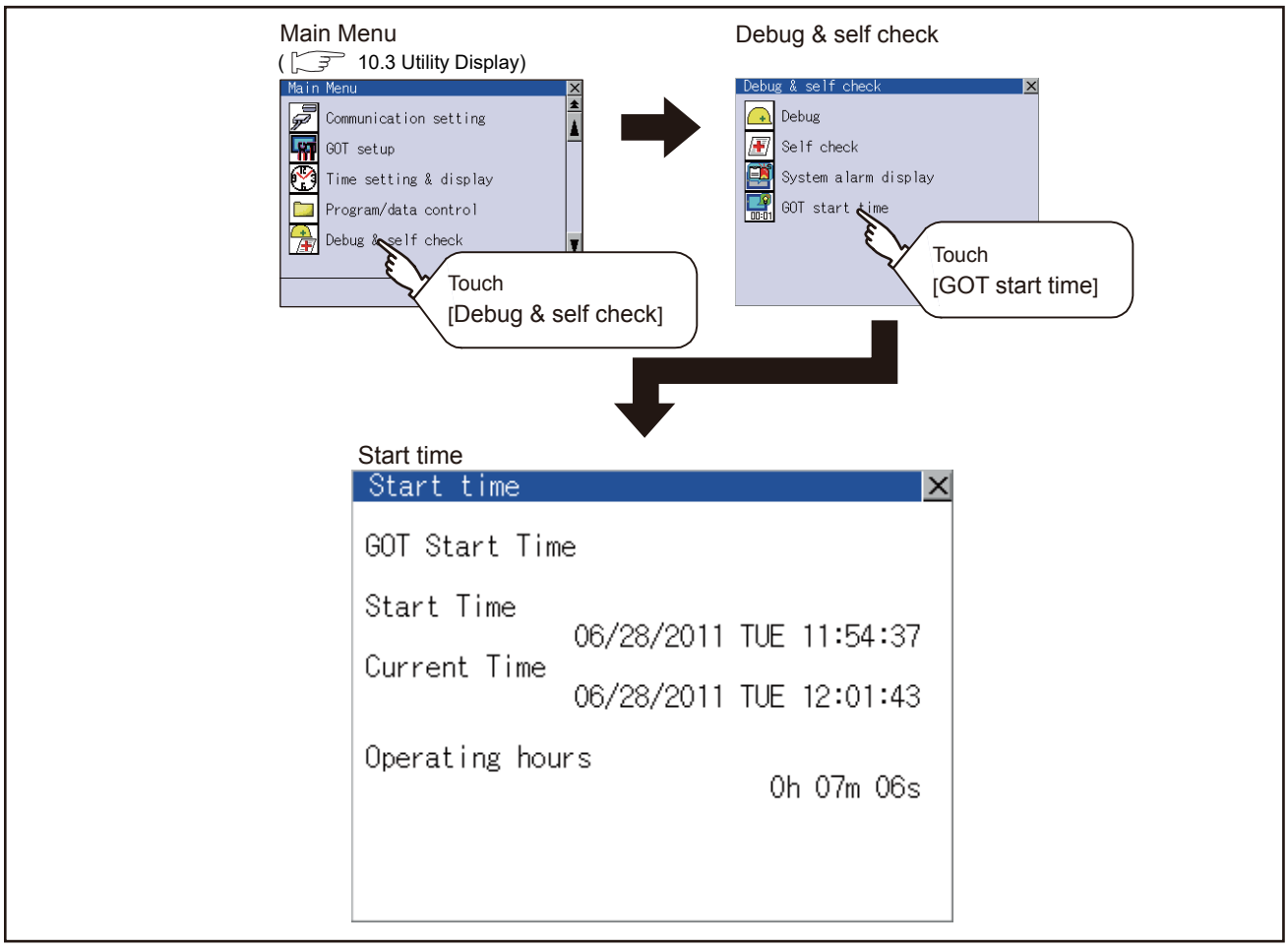

■ Display of GOT start time

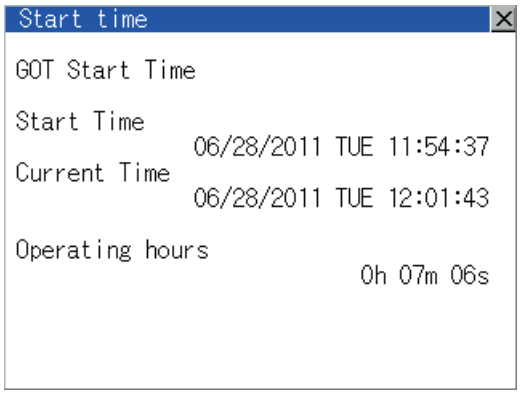

Item	Description
Start Time	Displays the time when the GOT was powered on or reset-restarted (OS installation, communication setting change).
Current Time	Displays the current time.
Operating hours	Displays operating hours of the GOT. The displayed operating hours is the accumulated time while GOT is powered on or reset-restarted (OS installation, communication setting change). When powering off or reset-restarting the GOT, the operating hours is cleared.

POINT

(1) To display correct time

Set the clock of GOT. (13.1.1 Time setting and display functions)

When the clock has not been set, the correct time is not displayed at [Start Time] and [Current Time].

(2) Time displayed at [Operating hours]

[Operating hours] is displayed irrespective of [Start Time] and [Current Time].

When changing the clock of the GOT, [Operating hours] does not match with the difference between [Current Time] and [Start Time].

([Operating hours] is not the time calculated from [Current Time] and [Start Time].)

The time displayed at [Operating hours] is a reference for the accumulated time while GOT is powered on or reset-restarted (OS installation, communication setting change).

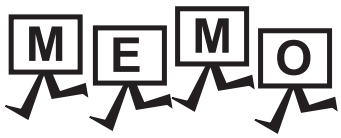
MEMO

16. CLEANING DISPLAY SECTION (CLEAN)

In utility, the screen can be set as not to be effected by touching the screen when clean with clothes.
To clean the GOT, wipe the dirty part with a soft cloth using neutral detergent.

POINT

Precautions for cleaning

Do not use chemicals such as thinner, organic solvents and strong acids, since they may cause the protective sheet to be deformed or the dissolvable paint on the surface to peel off.
In addition, do not use spray solvents since they may cause the electrical failure of the GOT and peripheral devices.

■ Display operation of Clean

Main Menu
(10.3 Utility Display)

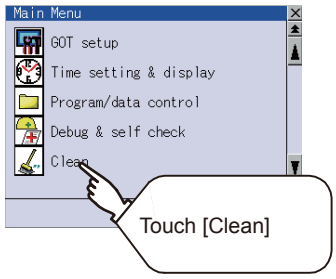

Clean

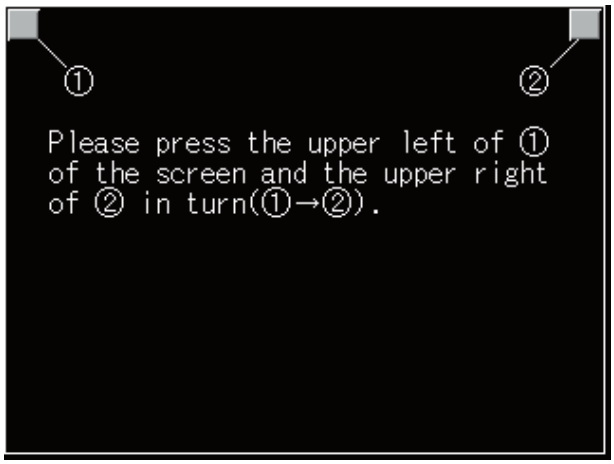

Even if touch points other than the upper left corner and upper right corner of the screen, the GOT does not operates.

■ Operation of Clean

After cleaning the screen, touch the screen following the instruction displayed.
After touching the screen, the screen returns to the Main Menu.

The following screen is displayed.

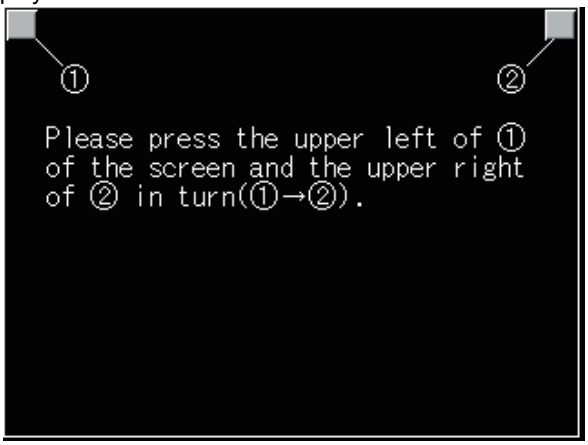

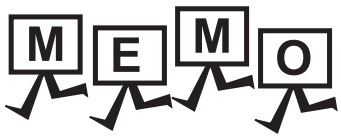
MEMO

17. INSTALLATION OF COREOS, BOOTOS AND STANDARD MONITOR OS

For executing the GOT utility, install the BootOS and standard monitor OS on the C drive (built-in flash memory) of the GOT, or set the OS boot drive to [A: Standard SD card] and insert the SD card with OS files into the GOT.
(BootOS is installed in the GOT at factory shipment. It is not necessary to install BootOS when upgrading of it is unnecessary.)
This chapter explains the installation using GOT.

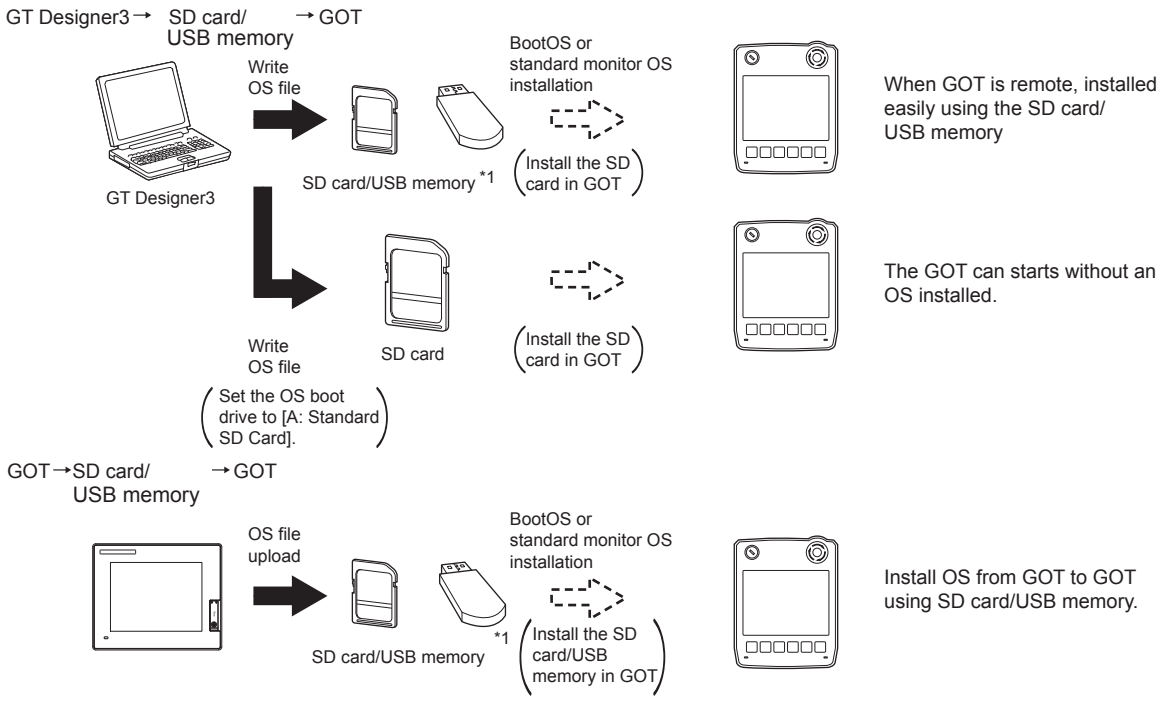

*1 When execute installation with USB memory, standard monitor OS has to be installed in GOT in advance.

For the writing of OS in GT Designer3, refer to the following.

☞ GT Designer3 Version1 Screen Design Manual (Fundamentals)

POINT

CoreOS

In 17.1 to 17.4 of this chapter, only BootOS and standard monitor OS are described.
For CoreOS, refer to the following.

☞ 17.5 CoreOS

17.1 BootOS and Standard Monitor OS Required for Installation

Under-mentioned BootOS and Standard monitor OS are necessary to execute utility.

OS name	Function overview		Storage location
BootOS	Required for the control of GOT and the communication between PC and GOT. Installed at factory shipment. (BootOS can be installed from GT Designer3 or the SD card. When installed from GT Designer3 or the SD card, GOT is initialized to be the factory shipment status.)		Built-in flash memory C: \G1BOOT\ SD card that stores data with OS boot drive set to the A drive A: \G1BOOT\
Standard monitor OS	Required for the GOT operation as the monitoring function of GOT, installation and deletion of the OS file or project data, touch key control or display function of the screen and guidance.	Required for display and operation of the user-created screen and utility screen. Not installed in GOT at factory shipment. Install it from GT Designer3, or the SD card or USB memory. At installation, select [Mincho] or [Gothic] for the 16-dot standard font.	Built-in flash memory C: \G1SYS\ SD card that stores data with OS boot drive set to the A drive A: \G1SYS\
	System screen data		
	System screen management information file		
	TrueType numerical font		
	12-dot standard font (Gothic)		
	16-dot standard font (Mincho)		
	16-dot standard font (Gothic)		

17.2 Prior Preparations for Installing BootOS and Standard Monitor OS

For the installation using GOT, the SD card or USB memory storing BootOS or standard monitor OS is required.
For the method of writing BootOS and standard monitor OS in the SD card or USB memory, the following three methods are available.

(1) [To Memory Card] from GT Designer3

☞ GT Designer3 Version1 Screen Design Manual (Fundamentals)

(2) Uploading from other GOT (BootOS or standard monitor OS has been installed)

☞ 14. FILE DISPLAY AND COPY (PROGRAM/DATA CONTROL)

(3) Using SD card that stores data with OS boot drive set to A drive

☞ GT Designer3 Version1 Screen Design Manual (Fundamentals)

POINT

Precautions on writing BootOS, standard monitor OS in SD card or USB memory

When writing BootOS, standard monitor OS, etc. in the SD card or USB memory, be sure to execute by the utility of other GOT, GT Designer3.
The installation is not executed properly with the SD card or USB memory to which uploaded from the utility of GOT or copied by software other than GT Designer3.
Note the available capacity of the SD card or USB memory.
The available capacity of BootOS and standard monitor OS can be confirmed by [To Memory Card] of GT Designer3.

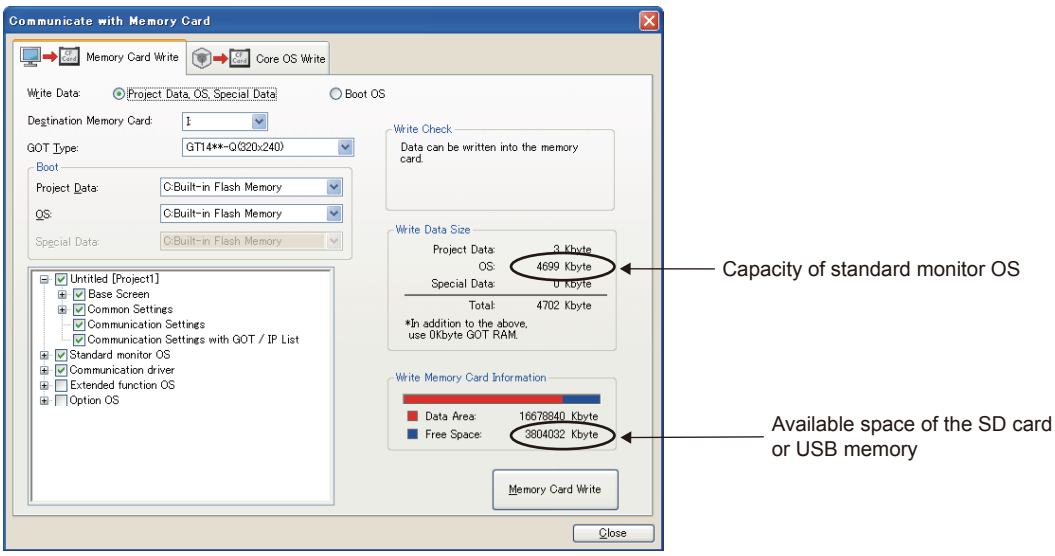

17.3 BootOS and Standard Monitor OS Installation Using SD card or USB Memory

There are the following two types for the BootOS, standard monitor OS installation using the SD card or USB memory.

(1) Installing when starting the GOT

(☞ 17.3.1 Installing when starting the GOT)

All the OS and project data stored in the SD card or USB memory are transferred to the GOT when powering on the GOT. This installing method is effective in the following cases.

- The GOT utility cannot be displayed.
- The standard monitor OS is not installed.

(2) Installing using the data control function (Utility)

(☞ 17.3.2 Installing using the program/data control function (Utility))

By operating the utility, select OS or project data stored in the SD card or USB memory and transfer them to the GOT.

POINT

Precautions on installing BootOS, standard monitor OS

(1) Installing both BootOS and standard monitor OS
After completing BootOS installation, install standard monitor OS. When installing BootOS, the built-in flash memory in the GOT is initialized and goes to the status at factory shipment. (All OS and project data are erased.)

BootOS is installed in the GOT at factory shipment.
It is not necessary to install BootOS when not upgrading it.

(2) Copying project data using SD card or USB memory
After installing BootOS, standard monitor OS, and other OS, download the project data.
At this time, match the version of the standard monitor OS in the GOT with the version of the standard monitor OS with which the project data was created.

(3) When OS and project data are in the SD card or USB memory (when using GT Designer3)
When installing by pressing the upper left corner of the GOT screen, project data is downloaded after completion of OS installation.
When installing with the utility, install the OS and download the project data from their respective operation screens.

(4) Installation cannot be interrupted.
Do not perform any of the following during a BootOS or standard monitor OS installation.
Failure to do so may result in installation failure, causing the GOT malfunction.

- Powering off the GOT
- Turning off the SD card access switch of the GOT
- Removing the SD card or USB memory

If the installation failure and the GOT malfunction occur, take the following action.

- If BootOS installation failed: Install CoreOS.

  (☞ 17.5.1 Installing the CoreOS)

- If standard monitor OS installation failed: Install BootOS.

  (☞ 17.3.1 Installing when starting the GOT)

17.3.1 Installing when starting the GOT

The displayed message is different depending on the installation condition of standard monitor OS. When the screen requesting operation is displayed, operate the GOT according to the instructions on the screen.

■ Operation procedure

(1) When installing with SD card

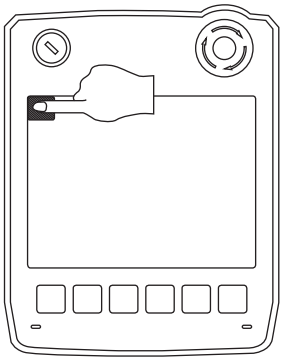

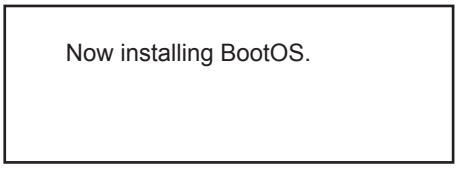

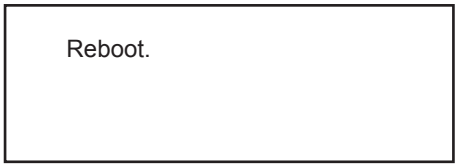

1. Power OFF the GOT, switch the SD card access switch to OFF, and install the SD card where the BootOS, standard monitor OS or project data is stored in the SD card interface of the GOT.
2. Switch ON the SD card access switch of GOT.
3. Power on the GOT while pressing upper left corner of the GOT screen. (1-point press installation function)
4. The BootOS or standard monitor OS is installed in the built-in flash memory.
   The SD card access LED is lit during the install execution.
   Do not pull out the SD card or power off the GOT while the SD card access LED is lit.
5. The GOT restarts automatically after the installation is completed.
   (When the standard monitor OS is already installed, the GOT restarts by touching the [OK] button.)
6. After confirming normal restart, switch off the SD card access switch of the GOT. Confirm that the card access LED is not lit, and remove the SD card from the SD card interface of the GOT.

(2) When installing with USB memory

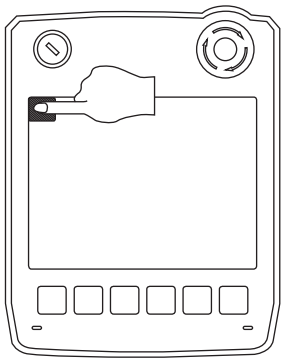

Now installing BootOS.

Reboot.

1. Power off the GOT, and install the USB memory where the BootOS, standard monitor OS or project data is stored in the USB interface of the GOT.
The BootOS cannot be stored in the USB memory where the standard monitor OS or project data is stored.

2. Power on the GOT while pressing upper left corner of the GOT screen. (1-point press installation function)

3. The BootOS or standard monitor OS is installed in the built-in flash memory.
Do not pull out the USB memory or power off the GOT while install execution.

4. The GOT restarts automatically after the installation is completed.
(When the standard monitor OS is already installed, the GOT restarts by touching the [OK] button.)

5. After confirming normal restart, remove USB memory from the USB interface of the GOT.
For removing methods of the USB memory, refer to the following.
14.2.9 USB device status display

POINT

(1) Drives to be used
When installing OS at power-on, use the A or E drive.

(2) Installation by pressing upper left corner of the GOT screen
When the OS boot drive is set to the A or E drive, installation by pressing upper left corner of the GOT screen is not available.

17.3.2 Installing using the program/data control function (Utility)

For details on program/data control function, refer to the following.

14. FILE DISPLAY AND COPY (PROGRAM/DATA CONTROL)

POINT

Precaution on executing program/data control function

When execute program/data control function, standard monitor OS has to be installed in GOT in advance. Thus, this function cannot be used for the initial installation of standard monitor OS after purchasing GOT.
Install standard monitor OS by the following two methods.

(1) GT Designer3

(2) Installing when starting the GOT

■ Operation procedure

(1) When installing with SD card

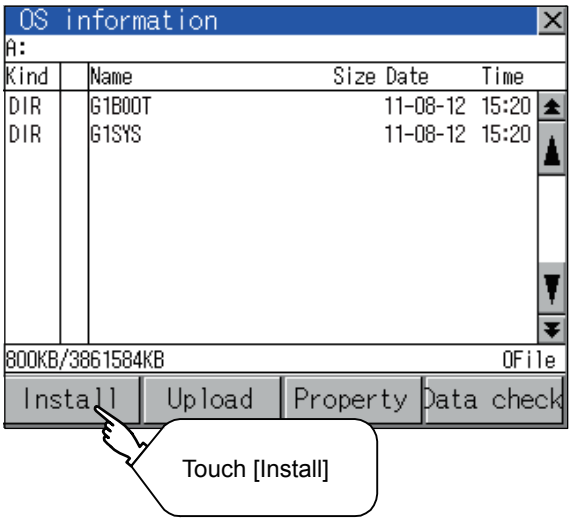

1. Power OFF the GOT. After SD card access LED is off, install the SD card in which BootOS, standard monitor OS or project data is stored in the SD card interface of GOT.
2. Switch ON the SD card access switch of GOT.
3. Display the program/data control function screen (Utility) on the GOT, and install BootOS, standard monitor OS from the SD card to GOT.

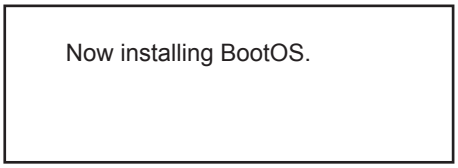

4. The SD card access LED is lit during the install execution.
   Do not pull out the SD card or power off the GOT while the SD card access LED is lit.

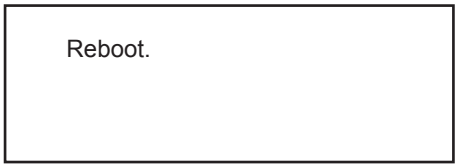

5. The GOT restarts automatically after the installation is completed.
6. After confirming normal restart, switch off the SD card access switch of the GOT. Confirm that the card access LED is not lit, and remove the SD card from the SD card interface of the GOT.

(2) When installing with USB memory

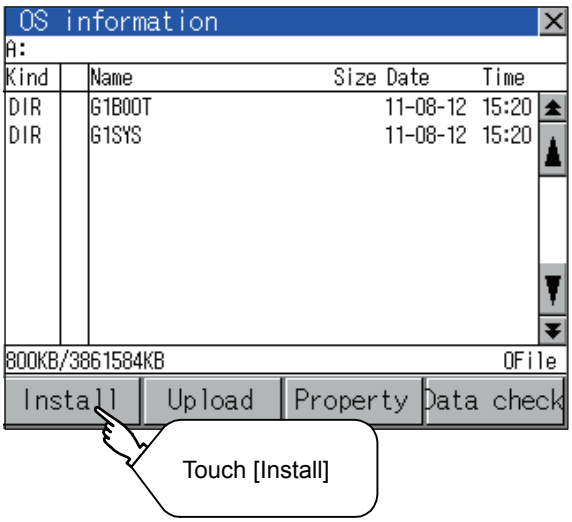

1. Install the USB memory in which BootOS, standard monitor OS or project data is stored in the USB interface of GOT.

2. Display the data control function screen (Utility) on the GOT, and install BootOS, standard monitor OS.

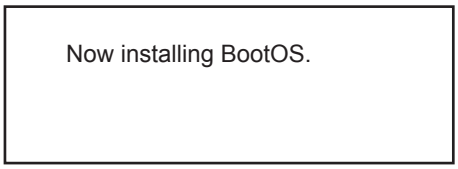

3. Do not pull out the USB memory or power off the GOT while install execution.

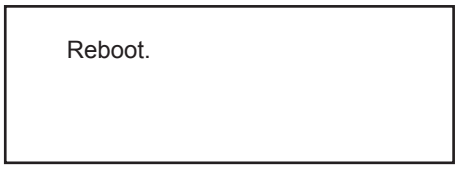

4. The GOT restarts automatically after the installation is completed.

5. After confirming normal restart, display the USB device status screen and remove the USB memory from the USB interface of GOT.

14.2.9 USB device status display

17.4 When Installing the Different Version of BootOS, Standard Monitor OS

■ BootOS installation

When installing BootOS, GOT compares the version of the BootOS to be installed with the version of BootOS which is already installed.
If the major version of BootOS to be installed is old, execute the following operations to prevent it from being rewritten.
(When installing from GT Designer3, a message is displayed on the PC screen. Follow the instructions in that message.)

(1) When only BootOS is stored in the SD card or USB memory

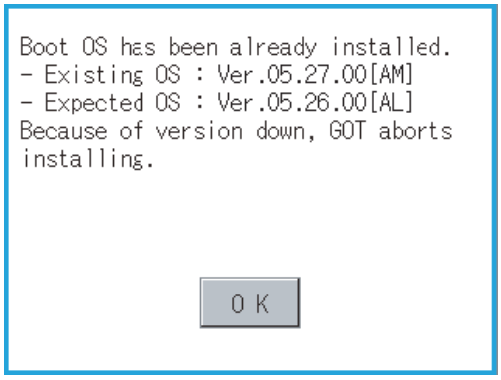

1. The message indicating disabled installation is displayed.
2. Touch the [OK] button to cancel installation. After canceling installation, restart the GOT.

(2) When BootOS, standard monitor OS, and other OS are stored in the SD card or USB memory

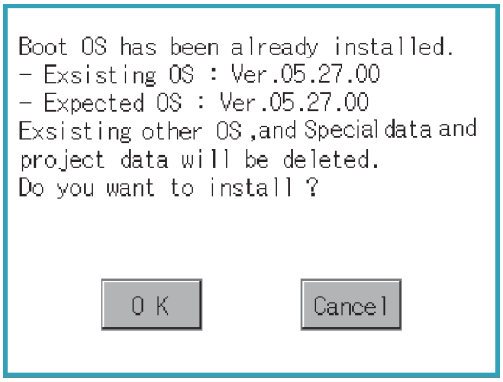

1. Skip the BootOS installation and install standard monitor OS and other OS.
   If the standard monitor OS is already stored on the GOT, the following message is displayed.
2. Touching the [OK] button executes installation. Touching the [Cancel] button cancels installation. After executing or canceling installation, restart the GOT.

(3) When the version is the same or newer regardless of the data stored in the SD card or USB memory (conditions (1) and (2) above)

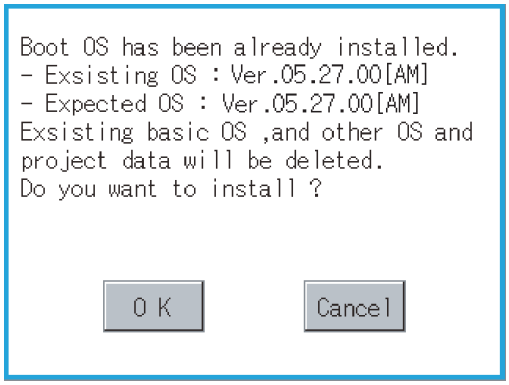

(GOT screen when BootOS is installed from SD card or USB memory)

1. The version information and a dialog for selecting whether or not to continue installation are displayed.
2. Touching the [OK] button executes installation. Touching the [Cancel] button cancels installation. After executing or canceling installation, restart the GOT.

■ Standard monitor OS installation

Match the version of each OS file when installing standard monitor OS.
Standard monitor OS cannot be installed if the version of each OS file does not match.

(When the installation process is discontinued.)

Standard monitor OS : 1. ○. ○
Communication driver : 2. ○. ○
Optional function OS : 2. ○. ○

Please match the number.

(When the installation process is normally executed.)

Standard monitor OS : 2. ○. ○
Communication driver : 2. ○. ○
Optional function OS : 2. ○. ○

POINT

Checking method of BootOS, standard monitor OS version

- Check the version of BootOS or standard monitor OS installed in GOT at [OS information] of the utility.
  For details, refer to the following.

  14.2.1 OS information

- Check the version of BootOS installed in GOT at product shipment on the rating plate on GOT rear face.

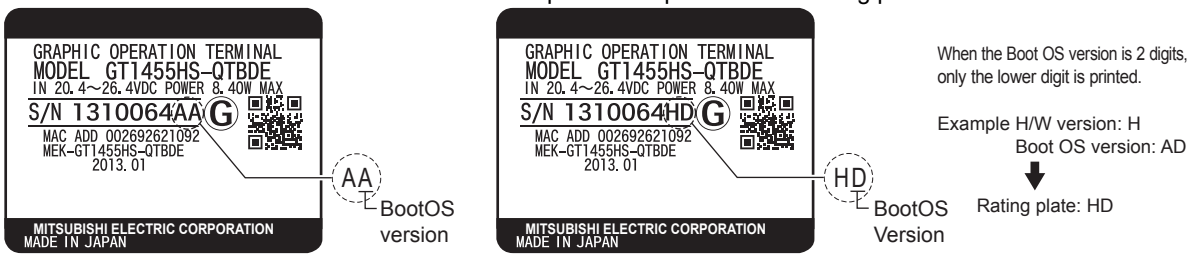

17.5 CoreOS

Install CoreOS only when the GOT will not be the status of factory shipment even when BootOS is installed.
Normally, the CoreOS has not to be installed.

POINT

Precautions for installing CoreOS

When executing the CoreOS installation once, it cannot be canceled on the way.
Do not attempt the following to cancel the installation on the way. The GOT may not operate.

- Powering off the GOT
  If the GOT does not operate, please consult your local Mitsubishi (Electric System) Service center or representative.

If the GOT does not recover even when installing the CoreOS, the error may be caused by a hardware failure.
Please consult your local Mitsubishi (Electric System) Service center or representative.

17.5.1 Installing the CoreOS

■ Before installing the CoreOS

(1) Installing procedure
The CoreOS can be installed only when using a SD card.
Installation via USB memory/USB/Ethernet is not available.

(2) Boot OS
When installing the CoreOS, the latest BootOS is also installed automatically.
(Operation by the user is not required.)

■ Installing the CoreOS

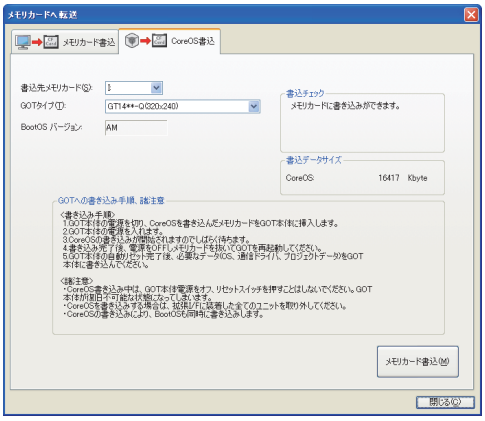

1. Write the CoreOS from GT Designer3 to the SD card.
   For details of GT Designer3 operation, refer to the following manual.
   ☞ GT Designer3 Version1 Screen Design Manual (Fundamentals)

2. After confirming that the GOT is powered off, install the SD card in the GOT. After installing, switch the SD card access switch on.

3. Powering the GOT on displays the screen on the left.
   To cancel the installation, power the GOT off and remove the SD card.

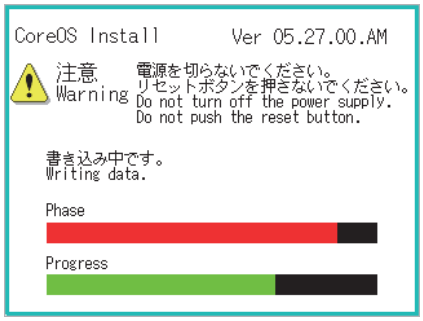

4. Turning the SD card access switch off executes CoreOS installation.

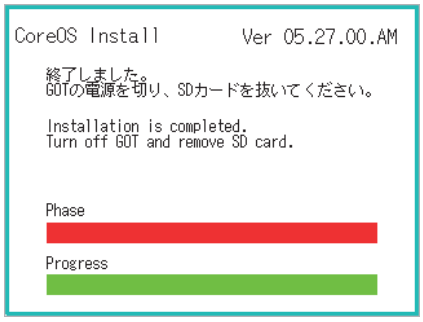

5. When the installation is completed, the dialog as shown on the left is displayed.
   (The POWER LED of the GOT blinks (green/orange) at the installation completion.)

6. Confirm that the message is displayed and power the GOT off.

7. Remove the SD card after powering the GOT off.

8. Powering the GOT on again displays the screen as shown on the left.
   (The GOT goes to the status of factory shipment.)
   Install OS (Standard monitor OS, communication driver, etc.) or download project data as required.

17.5.2 When the CoreOS cannot be installed

When the CoreOS cannot be installed, confirm the following item.
If the CoreOS cannot be installed even after checking the following item, the error may be caused by a hardware failure. Please consult your local Mitsubishi (Electric System) Service center or representative.

Error		Action
The CoreOS installation is not executed even when installing the SD card in the GOT.		(1) Check whether the SD card access switch of the GOT is on. If the switch is off, switch it on. (2) The writing from the GT Designer3 to the SD card may not have been completed normally. Execute the writing from the GT Designer3 to the SD card again.
The message is displayed on the GOT	GOT error. Contact your local sales office.	The GOT main unit is broken. Please consult your local Mitsubishi (Electric System) Service center or representative.
	SD card error. Check whether the SD card can be used. Installation will be cancelled.	The SD card is defective. (1) Format the SD card and re-execute. (2) Replace the SD card.
	GOT type and OS version do not match. Installation will be cancelled.	The GOT type selected at [Core OS write] of the GT Designer3 is not correct. Confirm the GOT type and perform [Core OS write] again.
	The version of OS is not acceptable to this GOT. Installation will be cancelled. Confirm the version of OS.	Install CoreOS from the latest GT Designer3.
	Memory card access switch is off. Installation will be cancelled. Turn on the switch and restart the GOT.	The SD card access switch is off. Turn the switch on and restart the GOT.

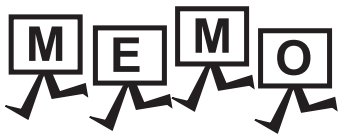
MEMO

18. DRAWING SOFTWARE SETTINGS (CONTROLLER SETTING AND COMMON SETTINGS)

18.1 Setting the Communication Interface

Set the communication interface of GOT and the connected equipment.
When using the GOT at the first time, make sure to set the channel of communication interface and the communication driver before writing to GOT.
Set the communication interface of the GOT at [Controller Setting] and [I/F Communication Setting] in GT Designer3.

POINT

When using the parameter reflection function of MELSOFT Navigator

The system configuration of MELSOFT Navigator can be reflected to the project of GT Designer3 using the parameter function of MELSOFT Navigator.
For details of the parameter functions of MELSOFT Navigator, refer to the following.

Help of MELSOFT Navigator

(1)The color of the cells for the items which are reflected to GT Designer3 from MELSOFT Navigator changes to green.Set items, which are displayed in green cells, from the MELSOFT Navigator.When changing in GT Designer3, refer to the following (3).

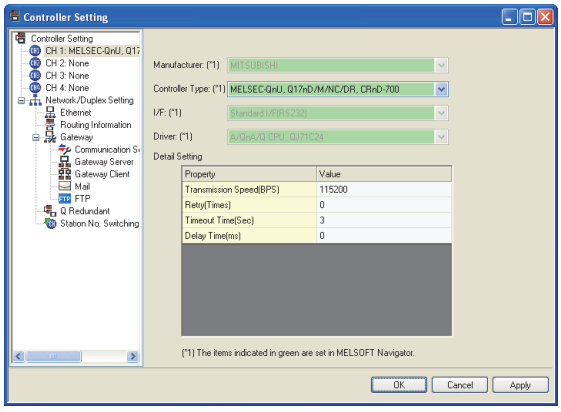

(2) When setting the communication interface for the connection with the iQ Works untargeted equipment, set [Set with GT Designer3] to the channel connected at [Input Detailed Configuration Information] in MELSOFT Navigator and make the settings at [Controller Setting] in GT Designer3.

(3) To make the items reflected from MELSOFT Navigator editable on GT Designer3, select the [Option] menu and put a check mark at [Enable an editing of parameters set in MELSOFT Navigator] in the [iQ Works Interaction] tab.
However, when the items set in MELSOFT Navigator are edited in GT Designer3, the interaction function with MELSOFT Navigator is unavailable due to a mismatch with the system configuration of MELSOFT Navigator. Eliminate mismatches using the parameter verification function etc. before using the interaction function of MELSOFT Navigator.

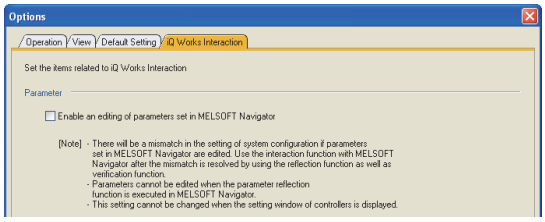

18.1.1 Setting connected equipment (Channel setting)

Set the channel of the equipment connected to the GOT.

■ Setting

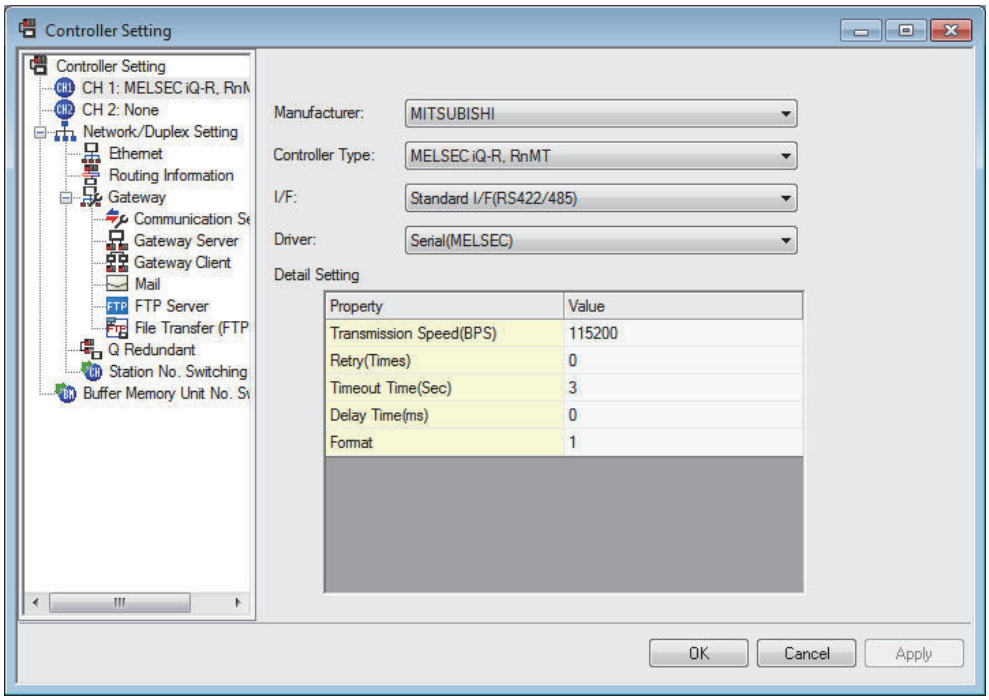

1. Select [Common] → [Controller Setting] from the menu.
2. The Controller Setting dialog box appears. Select the channel No. to be used from the list menu.
3. Refer to the following explanations for the setting.

POINT

Channel No.2

Use the channel No.2 when using the Multi-channel function.
For details of the Multi-channel function, refer to the following.

30. MULTI-CHANNEL FUNCTION

■ Setting item

This section describes the setting items of the Manufacturer, Controller Type, Driver and I/F.
When using the channel No.2 put a check mark at [Use CH*].

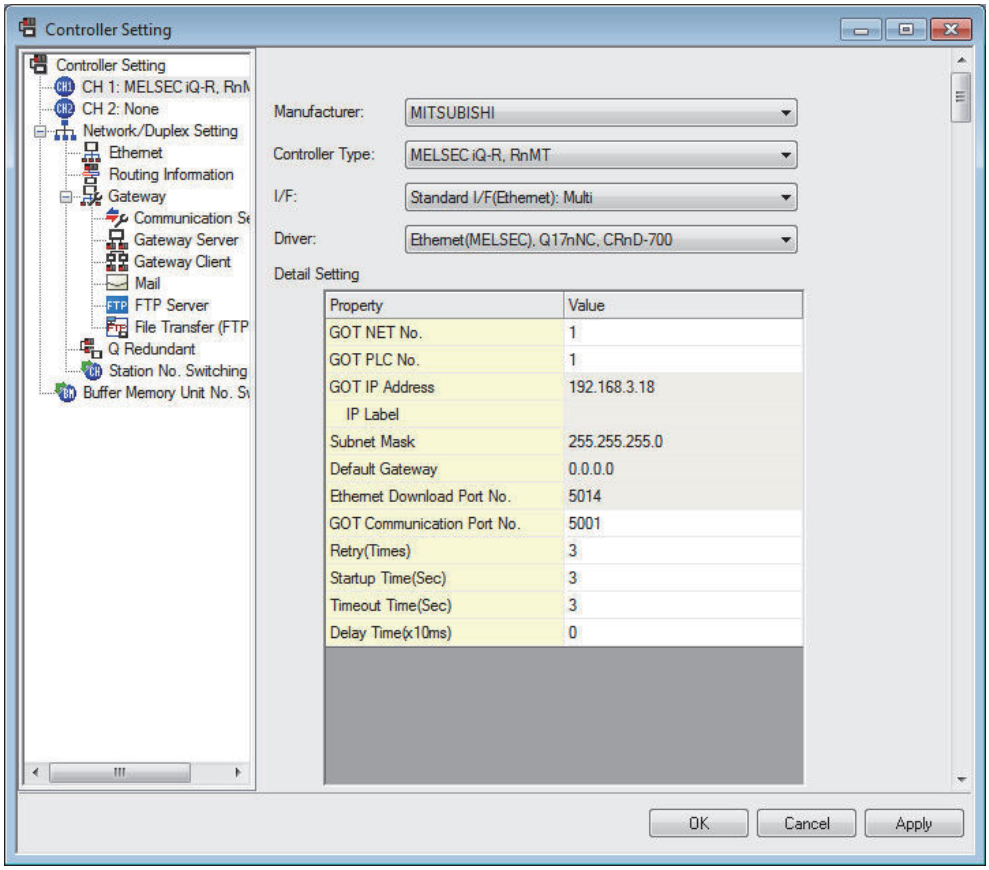

Item	Description
Use CH*	Select this item when setting the channel No.2.
Manufacturer	Select the manufacturer of the equipment to be connected to the GOT.
Type	Select the type of the equipment to be connected to the GOT.For the settings, refer to the following. ☞ (2)Setting [Controller Type]
I/F	Select the interface of the GOT to which the equipment is connected.For the settings, refer to the following. ☞ (3)Setting [I/F]
Driver	Select the communication driver to be written to the GOT.For the settings, refer to the following. ☞ (1)Setting [Driver]
Detail Setting	Make settings for the transmission speed and data length of the communication driver. ☞ Refer to each chapter of the equipment to be connected to the GOT

(1) Setting [Driver]

The displayed items for a driver differ according to the settings [Manufacturer], [Controller Type] and [I/F].
When the driver to be set is not displayed, confirm if [Manufacturer], [Controller Type] and [I/F] are correct.
For the settings, refer to the following.

☞ [Setting the communication interface] section in each chapter

(2) Setting [Controller Type]

The types for the selection differs depending on the PLC to be used.

For the settings, refer to the following.

Type	Model name
MELSEC iQ-R, RnMT	R04CPU
	R08CPU
	R16CPU
	R32CPU
	R120CPU
	R16MTCPU
	R32MTCPU
	R08PCPU R16PCPU R32PCPU R120PCPU
	R04ENCPU R08ENCPU R16ENCPU R32ENCPU R120ENCPU
	R08SFCPU R16SFCPU R32SFCPU R120SFCPU
	R12CCPU-V
MELSEC iQ-F	FX5U FX5UC
MELSEC-Q(MULTI)/Q MOTION	Q00CPU
	Q01CPU
	Q02CPU
	Q02HCPU
	Q06HCPU
	Q12HCPU
	Q25HCPU
	Q02PHCPU
	Q06PHCPU
	Q12PHCPU
	Q25PHCPU
	Q172CPU
	Q173CPU
	Q172CPUN
	Q173CPUN
	Q172HCPU
	Q173HCPU
MELSEC-QnU/DC, Q17nD/M/NC/DR*1	Q00UJCPU
	Q00UCPU
	Q01UCPU
	Q02UCPU
	Q03UDCPU
	Q04UDHCPU
	Q06UDHCPU
	Q10UDHCPU
	Q13UDHCPU
	Q20UDHCPU
	Q26UDHCPU
	Q03UDECPU
	Q04UDEHCPU
	Q06UDEHCPU
	Q10UDEHCPU
	Q13UDEHCPU
	Q20UDEHCPU
MELSEC-QnU/DC, Q17nD/M/NC/DR*1	Q26UDEHCPU
	Q50UDEHCPU
	Q100UDEHCPU
	Q03UDVCPU
	Q04UDVCPU
	Q06UDVCPU
	Q13UDVCPU
	Q26UDVCPU
	Q04UDPVCPU
	Q06UDPVCPU
	Q13UDPVCPU
	Q26UDPVCPU
	Q12DCCPU-V
	Q24DHCCPU-V/VG
	Q24DHCCPU-LS
	Q26DHCCPU-LS
	Q172DCPU
	Q173DCPU
	Q172DCPU-S1
	Q173DCPU-S1
	Q172DSCPU
	Q173DSCPU
	Q170MCPU
	Q170MSCPU
	Q170MSCPU-S1
	CNC C70 (Q173NCCPU)
	CRnQ-700 (Q172DRCPU)
	CR750-Q (Q172DRCPU)
	CR751-Q (Q172DRCPU)
	CRnD-700
	CR750-D
	CR751-D

*1 When using the multiple CPU system
When using the GOT to monitor the multiple CPU system of other station, select [MELSEC-Q(Multi)/Q-Motion], or [MELSEC-QnU/DC, Q17nD/M/NC/DR, CRnD-700] for the type regardless of the host PLC CPU type.

Type	Model name
MELSEC-QnA/Q, MELDAS C6*1	Q00JCPU
	Q00CPU
	Q01CPU
	Q02CPU
	Q02HCPU
	Q06HCPU
	Q12HCPU
	Q25HCPU
	Q02PHCPU
	Q06PHCPU
	Q12PHCPU
	Q25PHCPU
	Q12PRHCPU
	Q25PRHCPU
	QS001CPU
	Q2ACPU
	Q2ACPU-S1
	Q3ACPU
	Q4ACPU
	Q4ARCPU
	Q2ASCPU
	Q2ASCPU-S1
	Q2ASHCPU
	Q2ASHCPU-S1
	MELDAS C6 (FCA C6)
	MELDAS C64 (FCA C64)

*1 When using the multiple CPU system
When using the GOT to monitor the multiple CPU system of other station, select [MELSEC-Q(Multi)/Q-Motion], or [MELSEC-QnU/DC, Q17nD/M/NC/DR, CRnD-700] for the type regardless of the host PLC CPU type.

Type	Model name
MELSEC-L	L02CPU
	L06CPU
	L26CPU
	L26CPU-BT
	L02CPU-P
	L06CPU-P
	L26CPU-P
	L26CPU-PBT
	L02SCPU
	L02SCPU-P
	NZ2GF-ETB
MELSEC-A	A2UCPU
	A2UCPU-S1
	A3UCPU
	A4UCPU
	A2ACPU
	A2ACPUP21
	A2ACPUR21
	A2ACPU-S1
	A2ACPUP21-S1
	A2ACPUR21-S1
	A3ACPU
	A3ACPUP21
	A3ACPUR21
	A1NCPU
	A1NCPUP21

Type	Model name
MELSEC-A	A1NCPUR21
	A2NCPU
	A2NCPUP21
	A2NCPUR21
	A2NCPU-S1
	A2NCPUP21-S1
	A2NCPUR21-S1
	A3NCPU
	A3NCPUP21
	A3NCPUR21
	A2USCPU
	A2USCPU-S1
	A2USHCPU-S1
	A1SCPU
	A1SCPUC24-R2
	A1SHCPU
	A2SCPU
	A2SHCPU
	A1SJCPU
	A1SJCPU-S3
	A1SJHCPU
	A0J2HCPU
	A0J2HCPUP21
	A0J2HCPUR21
	A0J2HCPU-DC24
	A2CCPU
	A2CCPUP21
	A2CCPUR21
	A2CCPUC24
	A2CCPUC24-PRF
	A2CJCPU-S3
	A1FXCPU
	A273UCPU
	A273UHCPU
	A273UHCPU-S3
	A373UCPU
	A373UCPU-S3
	A171SCPU
	A171SCPU-S3
	A171SCPU-S3N
	A171SHCPU
	A171SHCPUN
	A172SHCPU
	A172SHCPUN
	A173UHCPU
	A173UHCPU-S1
MELSEC-FX	FX_0, FX_{0S}, FX_{0N}
	FX_1, FX_2, FX_{2C}
	FX_{1S}
	$FX_{1N(c)}$
	$FX_{2N(c)}$
	FX_{3S}
	$FX_{3G(c)}$
	$FX_{3U(c)}$
MELSEC-FX(Ethernet)	FX_{3S}
	$FX_{3G(c)}$
	$FX_{3U(c)}$

Type	Model name
MELSEC-WS	WS0-CPU0
	WS0-CPU1
	WS0-CPU3
MELSERVO-J2M-P8A	MELSERVO-J2M-P8A
MELSERVO-J2M-*DU	MELSERVO-J2M-*DU
MELSERVO-J2S-*A	MELSERVO-J2S-*A
MELSERVO-J2S-*CP	MELSERVO-J2S-*CP
MELSERVO-J2S-*CL	MELSERVO-J2S-*CL
MELSERVO-J3-*A	MELSERVO-J3-*A
MELSERVO-J3-*T	MELSERVO-J3-*T
MELSERVO-J4-*A	MELSERVO-J4-*A
FREQROL 500/700 Series	FREQROL-S500
	FREQROL-S500E
	FREQROL-E500
	FREQROL-F500
	FREQROL-F500L
	FREQROL-F500J
	FREQROL-A500
	FREQROL-A500L
	FREQROL-V500
	FREQROL-V500L
	FREQROL-E700
	FREQROL-F700
	FREQROL-F700P
	FREQROL-F700PJ
	FREQROL-A700
IAI X-SEL Controller	XSEL-J
	XSEL-K
	XSEL-KE
	XSEL-KT
	XSEL-KET
	XSEL-P
	XSEL-Q
	XSEL-JX
	XSEL-KX
	XSEL-KTX
	XSEL-PX
	XSEL-QX
	SSEL
	ASEL
	PSEL
IAI ROBO CYLINDER	PCON-C
	PCON-CG
	PCON-CF
	PCON-CY
	PCON-SE
	PCON-PL
	PCON-CA
	PCON-PO
	ACON-C
	ACON-CG
	ACON-CY
	ACON-SE
	ACON-PL
	ACON-PO
	SCON-C
	SCON-CA
	ERC2

Type	Model name
AZBIL SDC/DMC Series	DMC10
	DMC50
	SDC15
	SDC25
	SDC26
	SDC35
	SDC36
	SDC20
	SDC21
	SDC30
	SDC31
	SDC40A
	SDC40B
	SDC40G
	SDC45
	SDC46
	CMS
	CMF015
	CMF050
	CML
	MQV
	MPC
	MVF
	PBC201-VN2
	AUR350C
	AUR450C
	RX
	CMC10B
OMRON SYSMAC	CPM1
	CPM1A
	CPM2A
	CPM2C
	CQM1
	CQM1H
	CJ1H
	CJ1G
	CJ1M
	CP1H
	CP1L
	CP1E
	C200HS
	C200H
	C200HX
	C200HG
	C200HE
	CS1H
	CS1G
	CS1D
	C1000H
	C2000H
	CV500
	CV1000
	CV2000
	CVM1

Type	Model name
OMRON SYSMAC CS/CJ	CS1H
	CS1G
	CS1D
	CJ1H
	CJ1G
	CJ1M
	CJ2H
	CJ2M
OMRON THERMAC/INPANEL NEO	E5AN
	E5EN
	E5CN
	E5GN
	E5ZN
KEYENCE KV-700/1000/3000/5000	KV-700
	KV-1000
	KV-3000
	KV-5000
	KV-5500
KOYO KOSTAC/DL	SU-5E
	SU-6B
	SU-5M
	SU-6M
	PZ3
	D2-240
	D2-250-1
	D2-260
	D0-05AA
	D0-05AD
	D0-05AR
	D0-05DA
	D0-05DD
	D0-05DD-D
	D0-05DR
	D0-05DR-D
	D0-06DD1
	D0-06DD2
	D0-06DR
	D0-06DA
	D0-06AR
	D0-06AA
	D0-06DD1-D
	D0-06DD2-D
	D0-06DR-D
JTEKT TOYOPUC-PC Series	PC3JG-P-CPU
	PC3JG-CPU
	PC3J-CPU
	PC3JL-CPU
	PC2JC-CPU
	PC2J16P-CPU
	PC2J16PR-CPU
	PC2J-CPU
	PC2JS-CPU
	PC2JR-CPU

Type	Model name
SHARP JW	JW-21CU
	JW-31CUH
	JW-50CUH
	JW-22CU
	JW-32CUH
	JW-33CUH
	JW-70CUH
	JW-100CUH
	JW-100CU
	Z-512J
Shinko Technos Controller Series	ACS-13A□/□,□,C5
	JCS-33A-□/□□,C5
	JCR-33A-□/□□,C5
	JCD-33A-□/□□,C5
	JCM-33A□/□,□C5
	JIR-301-M□,C5
	PCD-33A-□/M,C5
	PC935-□/M,C5
	PC955-□/M,C5
	PC935-□/M,C
	PC955-□/M,C
Shinko Technos Controller Series	FCD-13A-□/M,C
	FCD-15A-□/M,C
	FCR-13A-□/M,C
	FCR-15A-□/M,C
	FCR-23A-□/M,C
	FIR-201-M,C
	DCL-33A-□/M,□,C5
CHINO Controllers	LT350
	LT370
	LT450
	LT470
	DZ1000
	DZ2000
	LT230
	LT830
	DB1000
	DB2000
	GT120
TOSHIBA PROSEC T/V Series	T2(PU224)
	T3
	T3H
	T2E
	T2N
	model 2000(S2)
	model 2000(S2T)
	model 2000(S2E)
	model 3000(S3)
TOSHIBA MACHINE Tcmini	TC3-01
	TC3-02
	TC6-00
	TC8-00
	TS2000
	TS2100
Panasonic MINAS-A4 series	MINAS A4
	MINAS A4F
	MINAS A4L

Type	Model name
PANASONIC INDUSTRIAL DEVICES SUNX MEWNET-FP Series	FP0-C16CT
	FP0-C32CT
	FP0R
	FP1-C24C
	FP1-C40C
	FP2
	FP2SH
	FP3
	FP5
	FP10(S)
	FP10SH
	FP-M(C20TC)
	FP-M(C32TC)
	FP-Σ
	FP-X
HITACHI HIDIC H Series	H-302
	H-702
	H-1002
	H-2002
	H-4010
	H-300
	H-700
	H-2000
	H-200
	H-250
	H-252
	H-252B
	H-252C
	H-20DR
	H-28DR
	H-40DR
	H-64DR
	H-20DT
	H-28DT
	H-40DT
	H-64DT
	HL-40DR
	HL-64DR
	EH-CPU104
	EH-CPU208
	EH-CPU308
	EH-CPU316
HITACHI S10mini/S10V	LQP510
	LQP520
	LQP800
	LQP000
	LQP010
	LQP011
	LQP120
FUJI MICREX-F Series	F55
	F70
	F120S
	F140S
	F15□S

Type	Model name
FUJI PXR/PXG/PXH	PXR3
	PXR4
	PXR5
	PXR9
	PXG4
	PXG5
	PXG9
	PXH9
FUJI MICREX-SX SPH	SPH200
	SPH300
	SPH3000
	SPH2000
YASKAWA GL/PROGIC8	PROGIC-8
	GL120
	GL130
	GL60S
	GL60H
	GL70H
YASKAWA CP9200SH/MP900 Series	MP920
	MP930
	MP940
	CP-9200SH
YASKAWA CP9200(H)	CP-9200(H)
YASKAWA CP9300MS(MC compatible)	CP-9300MS
YASKAWA MP2000/MP900/CP9200SH Series	MP2200
	MP2300
	MP920
	MP930
	MP940
	CP-9200SH
	CP-312
	CP-317
YOKOGAWA FA500/FA-M3 Series	FA500
	F3SP05
	F3SP08
	F3SP10
	F3SP20
	F3SP30
	F3FP36
	F3SP21
	F3SP25
	F3SP35
	F3SP28
	F3SP38
	F3SP53
	F3SP58
	F3SP59
	F3SP66
	F3SP67
	F3SP76-7S

Type	Model name
YOKOGAWA STARDOM/FA-M3 Series	NFCP100
	NFJT100
	F3SP05
	F3SP08
	F3SP10
	F3SP20
	F3SP30
	F3FP36
	F3SP21
	F3SP22-0S
	F3SP25
	F3SP35
	F3SP28
	F3SP38
	F3SP53
	F3SP58
	F3SP59
	F3SP66
	F3SP67
	F3SP76-7S
YOKOGAWA GREEN/UT100/UT2000 /UTAdvanced Series	UT320
	UT321
	UT350
	UT351
	UT420
	UT450
	UT520
	UT550
	UT551
	UT750
	UP350
	UP351
	UP550
	UP750
	UM330
	UM331
	UM350
	UM351
	US1000
	UT130
	UT150
	UT152
	UT155
	UP150
	UT2400
	UT2800
	UT32A
	UT35A
	UT52A
	UT55A
	UP35A
	UP55A
	UM33A

Type	Model name
RKC SR Mini HG	H-PCP-J
	H-PCP-A
	H-PCP-B
	Z-TIO
	Z-DIO
	Z-CT
	CB100
	CB400
	CB500
	CB700
	CB900
	FB100
	FB400
	FB900
	RB100
	RB400
	RB500
	RB700
	RB900
	PF900
	PF901
	HA400/401
	HA900/901
	RMC500
	MA900
	MA901
	AG500
	THV-A1
	SA100
	SA200
	X-TIO
AB SLC500	SLC500-20
	SLC500-30
	SLC500-40
	SLC5/01
	SLC5/02
	SLC5/03
	SLC5/04
	SLC5/05
AB MicroLogix1000/1200/1500 Series	1761-L10BWA
	1761-L10BWB
	1761-L16AWA
	1761-L16BWA
	1761-L16BWB
	1761-L16BBB
	1761-L32AWA
	1761-L32BWA
	1761-L32BWB
	1761-L32BBB
	1761-L32AAA
	1761-L20AWA-5A
	1761-L20BWA-5A
	1761-L20BWB-5A
	1762-L24BWA
	1764-LSP

Type	Model name
AB Control/CompactLogix	1756-L
	1756-L1M1
	1756-L1M2
	1756-L1M3
	1756-L61
	1756-L62
	1756-L63
	1756-L55M12
	1756-L55M13
	1756-L55M14
	1756-L55M16
	1756-L55M22
	1756-L55M23
	1756-L55M24
	1769-L31
	1769-L32E
	1769-L32C
	1769-L35E
	1769-L35CR
	1756-L72S
	1794-L33
	1794-L34

Type	Model name
GE Series 90	IC693CPU311
	IC693CPU313
	IC693CPU323
	IC693CPU350
	IC693CPU360
	IC693CPU363
	IC693CPU366
	IC693CPU367
	IC693CPU374
	IC697CPU731
	IC697CPX772
	IC697CPX782
	IC697CPX928
	IC697CPX935
	IC697CPU780
	IC697CGR772
	IC697CGR935
	IC697CPU788
	IC697CPU789
	IC697CPM790
	IC200UAA003
	IC200UAL004
	IC200UAL005
	IC200UAL006
	IC200UAA007
	IC200UAR028
	IC200UDD110
	IC200UDD120
	IC200UDD212
	IC200UDR005
	IC200UDR006
	IC200UDR010
	IC200UDD064
	IC200UDD164
	IC200UDR164
	IC200UDR064
	IC200UAR014
	IC200UDD104
	IC200UDD112
	IC200UDR001
	IC200UDR002
	IC200UDR003
LS Industrial Systems MASTER-K	K7M-D□□□S(/DC)
	K7M-D□□□U
	K3P-07□S
	K4P-15AS
SICK Flexi Soft	FX3-CPU000000
	FX3-CPU130002
	FX3-CPU320002
SIEMENS S7-300/400 Series	SIMATIC S7-300
	SIMATIC S7-400
SIEMENS S7-200	SIMATIC S7-200

Type	Model name (Manufacturer)	
MODBUS	NFCP100	YOKOGAWA
	NFJT100	
	TSX P57 203M	Schneider Electric
	TSX P57 253M	
	TSX P57 303M	
	TSX P57 353M	
	TSX P57 453M	
	140 CPU 311 10	
	140 CPU 434 12U	
	140 CPU 534 14U	
	140 CPU 651 50	
	140 CPU 651 60	
	140 CPU 671 60	
	140 CPU 113 02	
	140 CPU 113 03	
	140 CPU 434 12A	
	140 CPU 534 14A	
Microcomputer connection	Microcomputer	-

(3) Setting [I/F]

Set the I/F according to the Interface to be used.

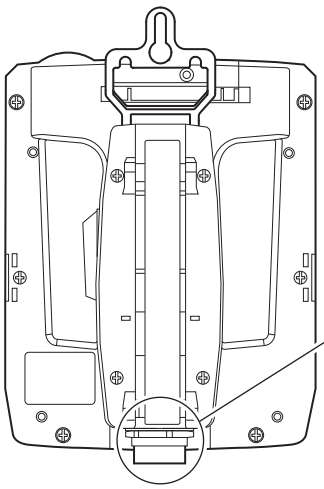

Ethernet interface
RS-232 interface
RS-422 interface

Ethernet interface, RS-422 interface and RS-232 interfacecannot be used at the same time.
Switch the Ethernet interface, RS-422 interface and RS-232 interface with the RS-422 ⇔ RS-232 selection connector in the environmental protection back cover.

18.1.2 I/F communication setting

This function displays the list of the GOT communication interfaces.
Set the channel and the communication driver to the interface to be used.

■ Setting

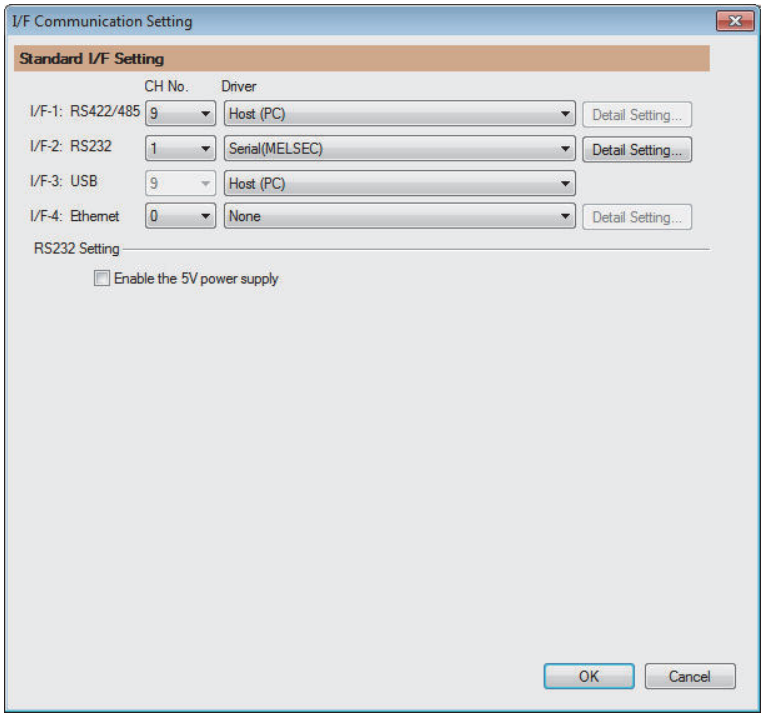

1. Select [Common] → [I/F Communication Setting] from the menu.
2. The I/F Communication Setting dialog box appears. Make the settings with reference to the following explanation.

POINT

When using the parameter reflection function of MELSOFT Navigator

When setting [Controller Setting] in GT Designer3 using the parameter function of MELSOFT Navigator, all of I/F Communication Setting are grayout and cannot be edited.Set these items at [Controller Setting] or [Peripheral Setting].

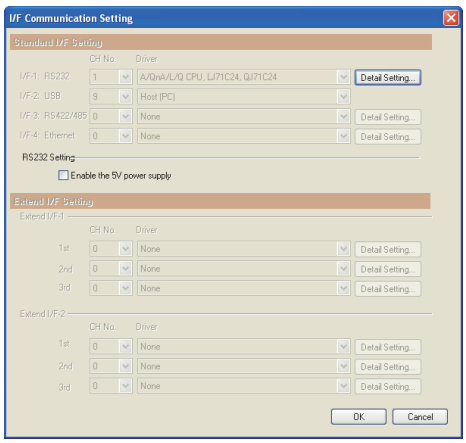

■ Setting item

The following describes the setting items of the standard I/F setting.(GT14 Handy does not use the extend I/F setting, RS232 setting.)

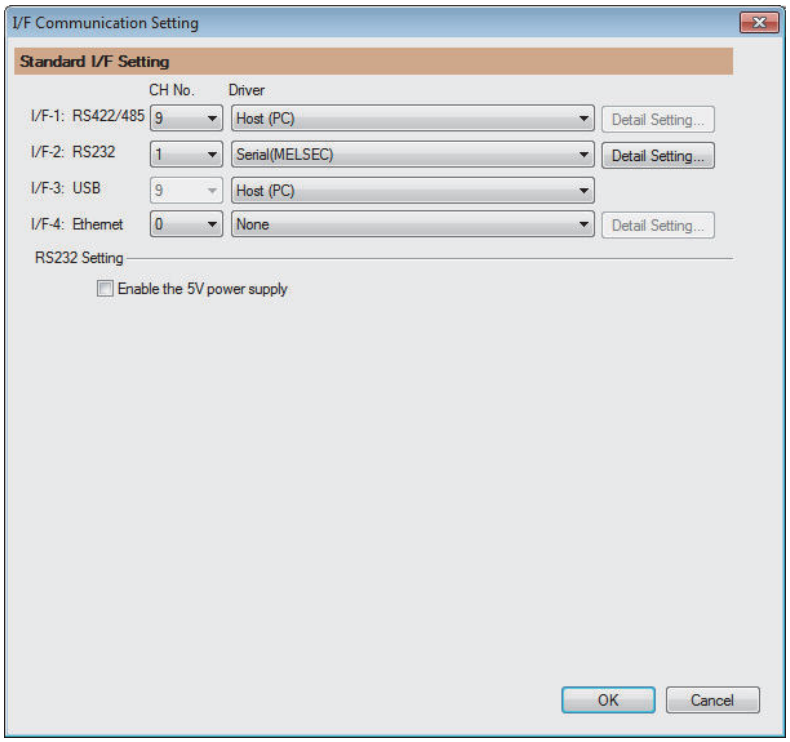

Item		Description
Standard I/F Setting		Set channel No. and drivers to the GOT standard interfaces. Standard I/F-1, Standard I/F-2, Standard I/F-3, Standard I/F-4
	CH No.	Set the CH No. according to the intended purpose. The number of channels differs depending on the GOT to be used. 0: Not used 1 to 4: Used for connecting a controller of channel No. 1 to 4 set in Setting connected equipment (Channel setting) 8: GOT(extended computer) 9: Used for connecting Host (PC) * : Used for gateway function and Ethernet download Multi: Used for Ethernet multiple connection
	I/F	The communication type of the GOT standard interface is displayed.
	Driver	Set the driver for the device to be connected. • None • Host (PC) • Each communication driver for connected devices
	Detail Setting	Make settings for the transmission speed and data length of the communication driver. ☞ Refer to each chapter of the equipment to be connected to the GOT.

POINT

Channel No., drivers

(1) Channel No.2 to No.4
Use the channel No.2 to No.4 when using the Multi-channel function.
For details of the Multi-channel function, refer to the following.

☞ 30. MULTI-CHANNEL FUNCTION

(2) Drivers
The displayed items for a driver differ according to the settings [Manufacturer], [Controller Type] and [I/F].
When the driver to be set is not displayed, confirm if [Manufacturer], [Controller Type] and [I/F] are correct.

☞ [Setting the communication interface] section in each chapter

18.1.3 Precautions

(1) When using the multiple CPU system
When using the GOT to monitor the multiple CPU system of other stations, select [MELSEC-Q(Multi)/Q-Motion] or [MELSEC-QnU/DC, Q17nD/M/NC/DR, CRnD-700] for the type, regardless of the host PLC CPU type (QCPU, QnACPU, ACPU).
When other models are selected, the setting of the CPU No. becomes unavailable.

(2) Precautions for changing model

(a) When devices that cannot be converted are included.
When setting of [Manufacturer] or [Controller Type] is changed, GT Designer3 displays the device that cannot be converted (no corresponding device type, or excessive setting ranges) as [??]. In this case, set the device again.

(b) When the changed Manufacturer or Controller Type does not correspond to the network.
The network will be set to the host station.

(c) When the Manufacturer or Controller Type is changed to [None]
The GT Designer3 displays the device of the changed channel No. as [??]. In this case, set the device again.
Since the channel No. is retained, the objects can be reused in other channel No. in a batch by using the [Device Bach Edit], [CH No. Batch Edit] or [Device List].

18.2 Common Settings Dedicated to Handy GOT

The following data are written as common settings: the system information to control the LED display for the Handy GOT grip switch.
After defining the system information and the Handy GOT setting in [Common Settings] of drawing software, write the common settings to the Handy GOT.

For details on Common Settings, refer to the following manual.

☞ GT Designer3 Version1 Screen Design Manual (Fundamentals)

For the settings on the display LED for grip switch, refer to the following section.

☞ 9.4.8 LED settings of grip switch

18.3 Writing the Communication Settings and Common Settings onto the GOT

Write the communication settings and common settings onto the GOT.
For details on writing to GOT, refer to the following manual.

GT Designer3 Version1 Screen Design Manual

18.3.1 Writing the project data and OS onto the GOT

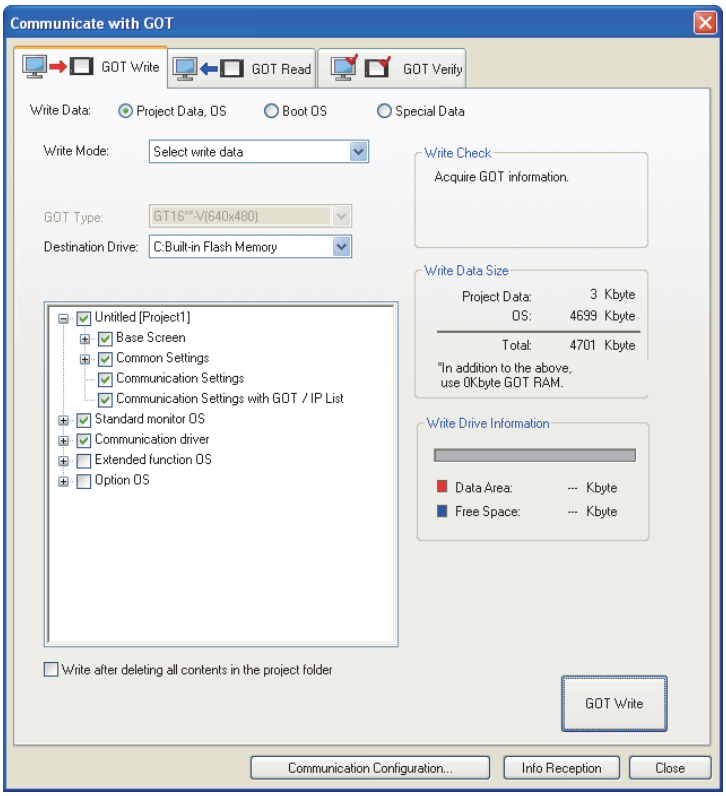

1. Select [Communication] → [Write to GOT…] from the menu.
2. The [Communication configuration] dialog box appears.
   Set the communication setting between the GOT and the personal computer.
   Click the [OK] button when the settings are completed.
3. The [GOT Write] tab appears on the [Communicate with GOT] dialog box.
   Select the [Project data, OS] radio button of the Write Data.
4. Check-mark a desired standard monitor OS, communication driver, option OS, extended function OS, Communication Settings and Common Settings and click the [GOT Write] button.

18.3.2 Checking the project data and OS writing on GOT

Confirm if the standard monitor OS, communication driver, option OS, project data, communication settings and common settings are properly written onto the GOT by reading from GOT using GT Designer3.
For reading from the GOT, refer to the following manual.

GT Designer3 Version1 Screen Design Manual

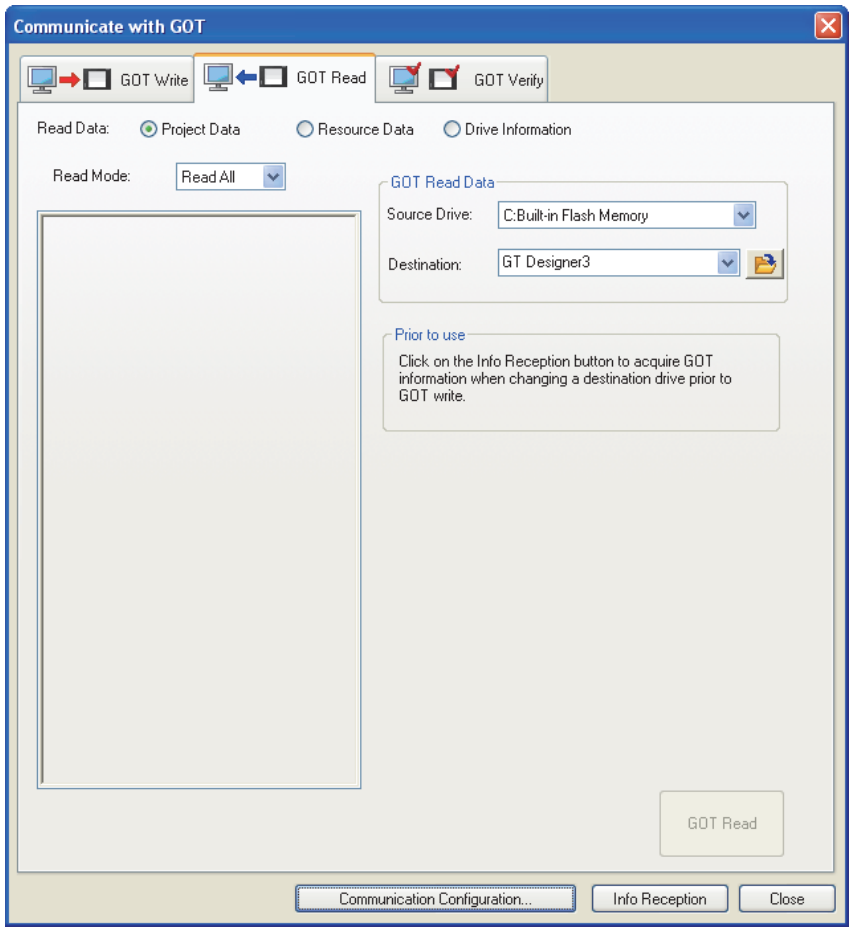

1. Select [Communication] → [Read from GOT…] from the menu.
2. The [Communication configuration] dialog box appears.
   Set the communication setting between the GOT and the personal computer.
   Click the [OK] button when the settings are completed.
3. The [GOT Read] tab appears on the [Communicate with GOT] dialog box.
   Select the [Drive information] radio button of the Read Data.
4. Click the [Info Reception] button.
5. Confirm that the project data and OS are written correctly onto the GOT.

19. MAINTENANCE AND INSPECTION

[STARTUP AND MAINTENANCE PRECAUTIONS]

⚠ WARNING

- When power is on, do not touch the terminals.
  Doing so can cause an electric shock or malfunction.
- Connect the battery correctly.
  Do not discharge, disassemble, heat, short, solder or throw the battery into the fire.
  Incorrect handling may cause the battery to generate heat, burst or take fire, resulting in injuries or fires.
- Before starting cleaning or terminal screw retightening, always switch off the power externally in all phases.
  Not doing so can cause the unit to fail or malfunction.
  Undertightening can cause a short circuit or malfunction.
  Overtightening can cause a short circuit or malfunction due to the damage of the screws or unit.

[STARTUP AND MAINTENANCE PRECAUTIONS]

⚠ CAUTION

- Do not disassemble or modify the unit.
  Doing so can cause a failure, malfunction, injury or fire.
- Do not touch the conductive and electronic parts of the unit directly.
  Doing so can cause a unit malfunction or failure.
- The cables connected to the unit must be run in ducts or clamped.
  Not doing so can cause the unit or cable to be damaged due to the dangling, motion or accidental pulling of the cables or can cause a malfunction due to a cable connection fault.
- When unplugging the cable connected to the unit, do not hold and pull the cable portion.
  Doing so can cause the unit or cable to be damaged or can cause a malfunction due to a cable connection fault.
- Before touching the unit, always touch grounded metal, etc. to discharge static electricity from human body, etc.
  Not doing so can cause the unit to fail or malfunction.

[DISPOSAL PRECAUTIONS]

⚠ CAUTION

- When disposing of the product, handle it as industrial waste.

The GOT does not include consumable components that will cause the shorten life.
However, the battery, liquid crystal display screen and backlight have each life length.
It is recommended to replace the battery periodically.
(For the replacement of the liquid crystal screen and backlight, please consult your nearest sales office or FA center.)
For the life of the liquid crystal display screen or backlight, refer to the following.

☞ 3.2 Performance Specifications

19.1 Daily Inspection

■ Daily inspection items

No.	Inspection Item		Inspection Method	Criterion	Action
1	Installation status of GOT		Check for loose mounting screws.	Securely mounted	Retighten screws within the specified torque range.
2	Connection status	Loose terminal screws	Retighten screws with screwdriver.	Not loose	Retighten terminal screws.
		Proximate solderless terminals	Visual check	Proper intervals	Correct.
		Loose connectors	Visual check	Not loose	Retighten connector fixing screws.
3	Usage status	Dirt on protection sheet	Visual check	Not outstanding	Replace with new one.
		Foreign material attachment	Visual check	No foreign matter sticking	Remove, clean.

For the model names of the protection sheet or the replacement procedure, refer to the following.

☞ 6.4 Protective Sheet

19.2 Periodic Inspection

■ Yearly or half-yearly inspection items

The following inspection should also be performed when equipment has been moved or modified or the wiring changed.

No.	Inspection Item		Inspection Method	Criterion	Action
1	Surrounding environment	Ambient temperature	Make measurement with thermometer or hygrometer. Measure corrosive gas.	0 to 40 °C	For use in control panel, temperature inside control panel is ambient temperature.
		Ambient humidity		10 to 90 %RH	
		Atmosphere		No corrosive gas	
2	Power supply voltage check		24 VDC Measure voltage across terminals.	20.4 to 26.4 VDC	Change supply power.
3	Mounting status	Looseness	Move module.	Should be mounted firmly.	Retighten screws.
		Foreign material attachment	Visual check	No foreign matter sticking	Remove, clean.
4	Connection status	Loose terminal screws	Retighten screws with screwdriver.	Not loose	Retighten terminal screws.
		Proximate solderless terminals	Visual check	Proper intervals	Correct.
		Loose connectors	Visual check	Not loose	Retighten connector fixing screws.
5	Battery		Check GOT internal battery voltage status in [Time Setting & Display] of the Utility. (☞ 13.1.1 Time setting and display functions)	No alarm displayed	Replace with new battery when the current battery has reached the specified life span, even if battery voltage is not displayed.

19.3 Cleaning Method

Use the GOT always in a clean condition.
To clean the GOT, wipe the dirty part with a soft cloth using neutral detergent.
For the display operation of the [Clean] screen, refer to the following.

16. CLEANING DISPLAY SECTION (CLEAN)

Clean

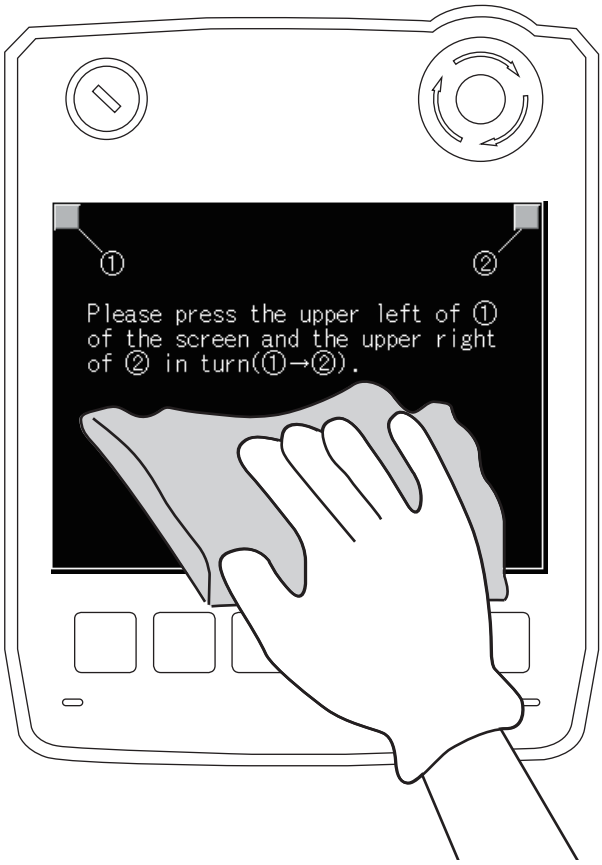

POINT

Precautions for cleaning

Do not use chemicals such as thinner, organic solvents and strong acids, since they may cause the protective sheet to be deformed or the dissolvable paint on the surface to peel off.
In addition, do not use spray solvents since they may cause the electrical failure of the GOT and peripheral devices.

19.4 Battery Voltage Low Detection and Battery Replacement

■ Low battery voltage detection and replacement

Battery contains the data for notifying the maintenance timing and current time.
It is recommended that you replace battery periodically.
For the replacement procedure, refer to the following.

☞ 6.3.2 Battery replacement procedure

The battery voltage low detection can be confirmed by the utility screen and system alarm.
For details of the battery status display by the utility screen, refer to the following.

☞ 12. DISPLAY AND OPERATION SETTINGS (GOT SET UP)

By using system alarm, the message that notifies the battery voltage has decreased can be displayed at the battery voltage low on the screen of the GOT.
To display the message in the system alarm, set [Battery alarm display] to on.

☞ 12.1.1 Function of Display

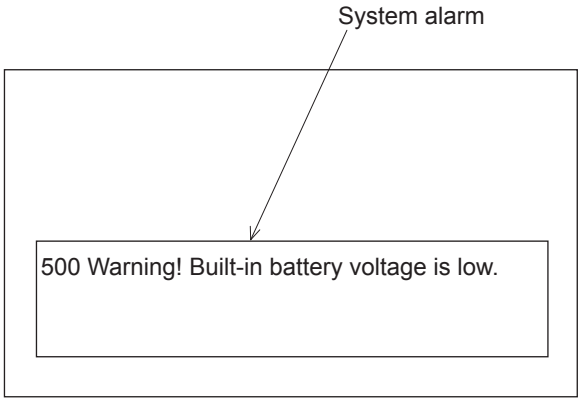

For details of the system alarm display, refer to the following.

☞ GT Designer3 Version1 Screen Design Manual (Fundamentals)

POINT

Battery replacement timing

When detecting voltage low, replace the battery immediately.
Data can be saved for about one month after the battery voltage low detection and cannot be saved after that.
If it exceeds a month from the voltage low detection to battery replacement, the clock data or D-drive (Internal SRAM) data may become indefinite.
Adjust the clock and format the D drive (Internal SRAM).

HINT

Example of alarm output to external device (lamp, buzzer, etc.)

The following describes an example of outputting the battery voltage low signal from a FX series PLC to an external device with system information.

Condition: The Write Device is "D20" and all data is used (the button is clicked on the setting screen of drawing software) for the system information assignment.

D36 b12: Battery voltage low (System Signal 2-2)
Turned on upon a battery voltage drop.
Used as shown below in the sequence program.

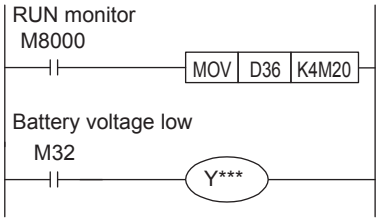

"*" indicates the output number at which the external device is connected.

For details of system information, refer to the following.

☞ GT Designer3 Version1 Screen Design Manual (Fundamentals)

■ Handling of Batteries and Devices with Built-in Batteries in EU Member States

This section describes the precautions for disposing of waste batteries in EU member states and exporting batteries and/or devices with built-in batteries to EU member states.

(1) Disposal precautions

In EU member states, there is a separate collection system for waste batteries. Dispose of batteries properly at the local community waste collection/recycling center.

The following symbol is printed on the batteries and packaging of batteries and devices with built-in batteries used for Mitsubishi Graphic Operation Terminal (GOT).

Symbol

POINT

This symbol is for EU member states only.

The symbol is specified in the new EU Battery Directive (2006/66/EC) Article 20 "Information for end-users" and Annex II.

The symbol indicates that batteries need to be disposed of separately from other wastes.

(2) Exportation precautions

The new EU Battery Directive (2006/66/EC) requires the following when marketing or exporting batteries and/or devices with built-in batteries to EU member states.

- To print the symbol on batteries, devices, or their packaging
- To explain the symbol in the manuals of the products

(a) Labeling

To market or export batteries and/or devices with built-in batteries, which have no symbol, to EU member states on September 26, 2008 or later, print the symbol shown in (1) on the GOT or their packaging.

(b) Explaining the symbol in the manuals

To export devices incorporating Mitsubishi Graphic Operation Terminal to EU member states on September 26, 2008 or later, provide the latest manuals that include the explanation of the symbol.

If no Mitsubishi manuals or any old manuals without the explanation of the symbol are provided, separately attach an explanatory note regarding the symbol to each manual of the devices.

POINT

The requirements apply to batteries and/or devices with built-in batteries manufactured before the enforcement date of the new EU Battery Directive (2006/66/EC).

19.5 Backlight Shutoff Detection

The backlight is built into GOT for the liquid crystal display.
When GOT detects backlight shutoff, the POWER LED blinks green/orange alternately.
The brightness of the backlight decreases with the lapse of usage period. When backlight shutoff is detected or the display becomes unclear, replace the backlight. (GT14 Handy requires LED replacement.)
For replacement of the backlight, contact your nearest sales office or FA Center.

(1) Life of backlight
The usable duration of backlight can be extended by setting to "Screen saving backlight off" in the utility of GOT (GOT set up). For details, refer to the following.

☞ 12. DISPLAY AND OPERATION SETTINGS (GOT SET UP)

19.5.1 Backlight shutoff detection and external alarm

When the GOT detects a backlight shutoff, the system information set with drawing software is turned on.
You can issue a backlight shutoff of the GOT from the PLC to external devices (such as the lamp or buzzer), using system information.
To avoid any screen touch operation by the user who misunderstands it is in screen saving mode, install an external alarm and interlock the loads that would cause danger.
For details of the system information, refer to the following.

☞ GT Designer3 Version1 Screen Design Manual (Fundamentals)

HINT

Example of alarm output to external device (lamp, buzzer, etc.)

The following provides an example of outputting the backlight shutoff detection signal from a FX Series PLC to an external device, using system information.

Condition: The Write Device is "D20" and all data is used (the button is clicked on the setting screen of drawing software) for the system information assignment.

D36 b14: Backlight shutoff detection (System Signal 2-2)
Turned on upon a backlight shutoff.
Used as shown below in the sequence program.

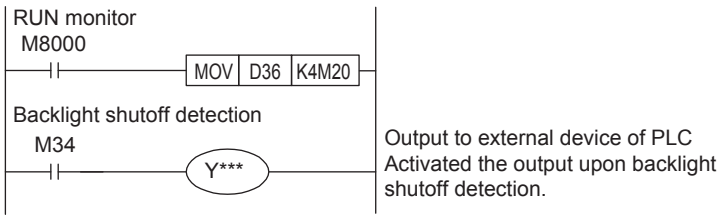

"*" indicates the output number at which the external device is connected.

POINT

Precautions for the backlight shutoff status

In the backlight shutoff status, the touch key operates.
Early replacement of backlight is recommended.

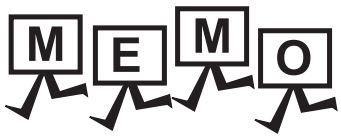
MEMO

20. TROUBLESHOOTING

This chapter explains the GOT restoration sheet and the error message/system alarm list.

20.1 GOT Restoration Sheet

This section provides restoration methods for the case the GOT does not operate normally, which are listed in check sheets.
The following explains how to use each sheet.

(1) When the GOT does not operate or malfunctions (GOT status check sheet)
When the GOT does not operate or malfunctions, identify the cause of the malfunction etc. with GOT status check sheet and take corrective action.
When the GOT is restored, see the status for a while.

(2) When the wiring status needs to be improved (GOT installation status check sheet)
When the noise caused by the GOT wiring status is considered to have caused the malfunction, etc. based on the check result of (1) above, take corrective action for wiring using GOT installation status check sheet.
When the GOT is restored, see the status for a while.

(3) When corrective action other than (1) and (2) above is required (System configuration check sheet)
If malfunction etc. occurs even after checking with (1) and (2) above, please contact your local Mitsubishi (Electric System) Service after filling out System configuration check sheet with details about your system.
When sending a troubled product, attach the GOT restoration sheets (GOT status check sheet, GOT installation status check sheet, System configuration check sheet) checked in this section.
Please keep copies of the restoration sheets.

■ GOT status check sheet

Check the GOT starting from (1) GOT status.
Proceed as instructed by "Action".

(1) GOT status

Phenomenon	Cause/status	Action
(a) Frequency when the GOT does not operate, an error occurs on the screen, etc.		
☐ Occurs always. ☐ Occurs sometimes.	Occurrence frequency: ( ) Example: Once a month	Proceed to (1)-(b).
(b) Checking of the displayed error code (system alarm)		
☐ Can be checked.	Error code (system alarm): ( ) Example: 460 Communication unit error	Take the action for the error code (system alarm) or error message checked. If the status does not change after the action is taken, proceed to (1)-(c).
☐ Cannot be checked.		Proceed to (1)-(c).
(c) POWER LED		
☐ Lit in green	The power is supplied normally.	Proceed to (1)-(d).
☐ Lit in orange	Screen saving is being performed. The read device of the system information may have been turned ON when the device was set, and the screen was switched to the forced screen saving status.	Check the setting of the read device. When no problem is found in the setting, proceed to (1)-(d).
☐ Blinks in green/orange	The backlight has run out.	Replace the backlight. If the GOT is not restored, proceed to (1)-(d).
☐ Not lit	The power is not supplied. When the power is supplied, the GOT hardware may be faulty.	Check if the power is supplied. If the GOT is not restored, proceed to (5) Troubled product investigation.
(d) Screen display		
☐ The screen is completely black.	The liquid crystal display or BootOS may be faulty.	Perform the following in order. 1) Reinstalling BootOS 2) Reinstalling standard monitor OS If the GOT is not restored by 1) and 2), perform the following. 3) Reinstalling CoreOS and then standard monitor OS If the GOT is not restored by the above operations, proceed to (5) Troubled product investigation.
☐ The screen is completely white.	The GOT hardware may be faulty.	Proceed to (5) Troubled product investigation.
☐ A line is displayed on the screen. ☐ Other faulty displays	The GOT hardware may be faulty. Example: A vertical line is displayed. 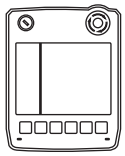	Proceed to (5) Troubled product investigation.
☐ The screen freezes.	The screen display is not updated and any operation is not allowed.	Proceed to (1)-(e).

Phenomenon	Cause/status	Action
(e) Buzzer sound		
☐ Does not sound. ☐ Continues to beep randomly. ☐ Continues to beep in a particular pattern.	Buzzer sound: ( ) Example: The rhythm as three beeps, one beep, and then two beeps is repeated.	Proceed to (2) Status of the GOT when it freezes.
☐ Beeps continuously.	The read device of the system information may have turned ON when the device was set, turning ON the Buzzer output signal.	Check the setting of the read device. When the Buzzer output signal has no error, proceed to (2) Status of the GOT when it freezes.

(2) Status of the GOT when it freezes (screen operation stopped)

Phenomenon	Cause/status	Action
(a) Switching to the utility		
☐ Enabled	Error code (system alarm): ( ) Example: 460 Communication unit error	When the system alarm display function can be used, take the action for the error code (system alarm) displayed. If the action cannot be taken, proceed to (2)-(b).
☐ Disabled	The system alarm display function cannot be used.	Proceed to (2)-(c).
(b) Executing of I/O check from the GOT utility		
☐ Communication error	Display details: ( ) Example: A message indicating the cause may be a connection error was displayed.	Proceed to (2)-(c).
☐ No error	The hardware such as a communication interface has no error.	Proceed to (3) Status of the PLC CPU.
(c) Objects not displayed on the monitor screen		
☐ Found ☐ Not found	Details: ( ) Example: The numerical display object is not displayed.	Proceed to (3) Status of the PLC CPU.

(3) Status of the PLC CPU

Phenomenon	Cause/status	Action
(a) PLC failure		
☐ Occurs always.	An error such as CONTROL-BUS. ERROR or SP. UNIT LAY. ERROR may have occurred. Error code (system alarm): ( ) Example: 1204 CPU H/W fault	Proceed to the following. ☞ 20.1
☐ Occurs sometimes.	The PLC CPU may be influenced by noise or the hardware may be faulty. Occurrence frequency: ( ) Example: Once a month Error code (system alarm): ( ) Example: 1204 CPU H/W fault	Proceed to (4) GOT restoration procedure.
☐ Operates normally.	-	

(4) GOT restoration procedure

Follow the procedures below starting from (a) and in order to check if the GOT is restored.
If the GOT is not restored, proceed to the next item.

Check item	Cause	Action
(a) Power the GOT ON/OFF.*1 ☐ Restored ☐ Not restored (Proceed to (b).)	The GOT may have malfunctioned temporarily due to noise.	Take the action of (4)-(g).
(b) Reset or power ON/OFF the PLC CPU. ☐ Restored ☐ Not restored (Proceed to (c).)		
(c) Power the GOT and PLC CPU ON/OFF simultaneously. ☐ Restored ☐ Not restored (Proceed to (d).)		
(d) Connect the cable again. ☐ Restored ☐ Not restored (Proceed to (e).)	The cable connection may be faulty.	Securely connect the cable. If an error occurs again, proceed to (5) Troubled product investigation.
(e) Reinstall the project data. ☐ Restored ☐ Not restored (Proceed to (f).)	Data may have been destroyed by an action such as powering the GOT OFF during the installation of project data or OS.	Do not power the GOT OFF while transferring data. If an error occurs again, proceed to (5) Troubled product investigation.
(f) Reinstall the OS. ☐ Restored ☐ Not restored (Proceed to (g).)		
(g) Take the action described in the "Action" column. ☐ Restored ☐ Not restored (Proceed to (h).)	The GOT may have malfunctioned temporarily due to noise.	Take the action with referring to GOT installation status check sheet.
(h) The GOT is not restored even by performing (a) to (g).	-	Proceed to (5) Troubled product investigation.

*1 When powering the GOT ON again (OFF → ON), power OFF the PLC before that.

(5) Troubled product investigation

When malfunction of the GOT is not improved, please contact your local Mitsubishi (Electric System) Service.
Depending on the problem details, we may ask you to return the troubled product to us.
In that case, please attach the GOT status check sheet, GOT installation status check sheet, and the system configuration check sheet filled out with details of your system.

■ GOT installation status check sheet

Check the current installation status of the GOT you are using against the GOT installation status described in the upper column of items (1) to (7).
When the measure described in the lower column is needed, take the measure for the current status.
When the measure is taken, check the result, "Effective" or "Ineffective".

(1) Panel inside wiring

Current status	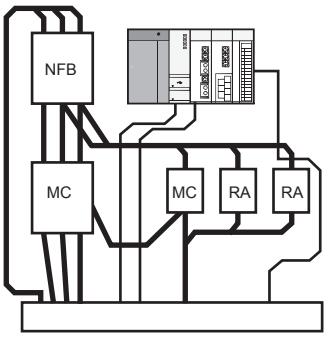	The power line connected to the power or servo amplifier and the communication cable are mixed in the duct.	☐ Mixed ☐ Not mixed
Measure for the cables mixed	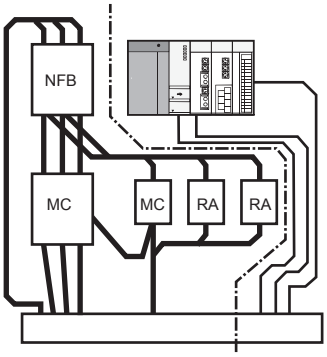	Wiring the power line and communication cable in the panel without mixing them in the duct can reduce the influence of noise.	☐ Effective ☐ Ineffective

(2) Panel outside wiring

Current status	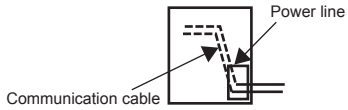	The power line and communication cable are installed together.	☐ Installed together ☐ Not installed together
Measure for the cables installed together Fig. A	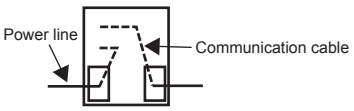	Leading the power line and communication cable outside the panel at separate places can make the communication cable less influenced by noise from the power line. Installing the communication cable apart from the power line or using a separator (made of metal) in the duct as shown in Fig. B can make the communication cable less influenced by noise.	☐ Effective ☐ Ineffective
Fig. B	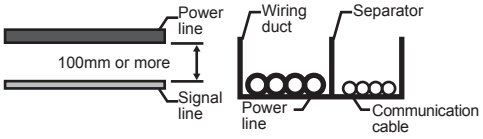		

(3) Wiring of GOT's FG cable and power line

Current status 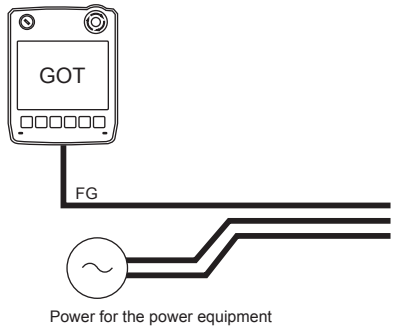	The FG cable and power line of the GOT are installed together.	☐ Installed together ☐ Not installed together
Measure for the cables installed together 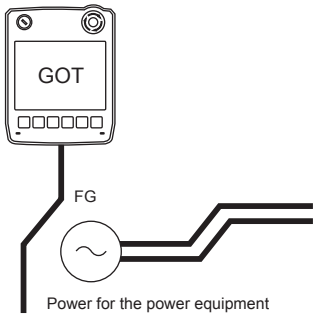	Separating the FG cable and power line of the GOT in wiring reduces the influence of noise.	☐ Effective ☐ Ineffective

(4) Surge measures

Current status 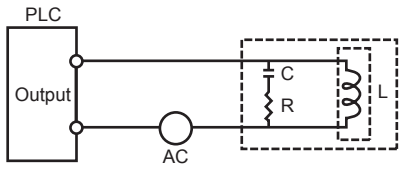	A surge suppressor is used for the wiring of the load such as MCCB, electromagnetic contactor, relay, solenoid valve, or induction motor. (When a surge suppressor is used, fill out the entry area below with the surge suppressor model name and the name of the equipment for which the surge suppressor is used.)	☐ Used ☐ Not used
Measure for the equipment without a surge suppressor used 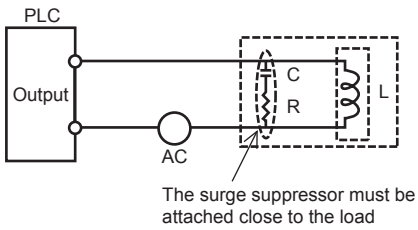	Attaching the surge suppressor on the cable close to the load can reduce the influence of surge on the GOT.	☐ Effective ☐ Ineffective

Entry area

Model name of the surge suppressor	Equipment name

(5) Grounding status

<table>
<tr>
<td>Current status</td>
<td> 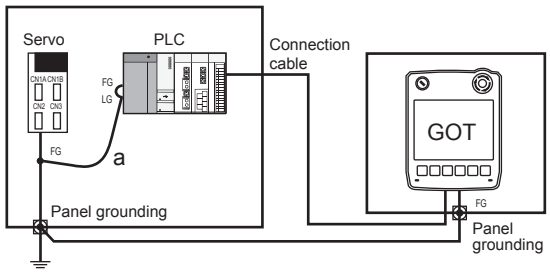
</td>
<td>The FG cables of the control equipment (such as PLC) and the power equipment (such as servo amplifier) are connected as shown by "a".</td>
<td>☐ Connected
☐ Not connected</td>
</tr>
<tr>
<td>Measure for the FG cables connected</td>
<td>Fig. A
 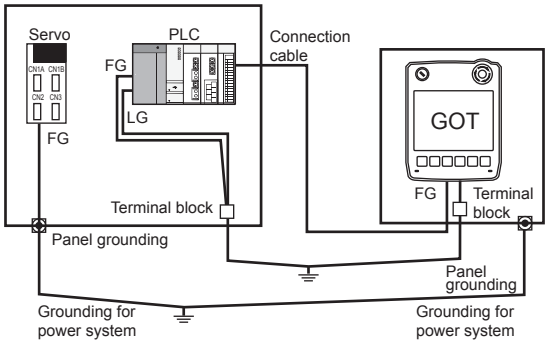

Fig. B
 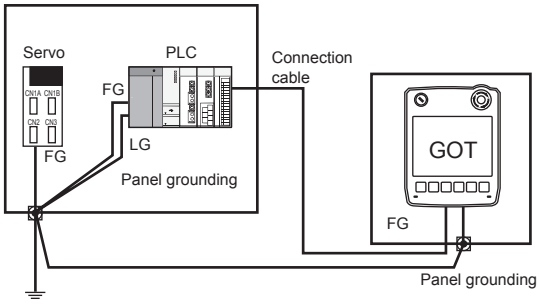
</td>
<td>Perform independent grounding at two places as shown in Fig. A. Independent grounding can reduce the influence of noise.
If independent grounding is not allowed, be sure to perform shared grounding as shown in Fig. B.</td>
<td>☐ Effective
☐ Ineffective</td>
</tr>
</table>

(6) Grounding status of the panel on which the GOT is installed

<table>
<tr>
<td>Current status
 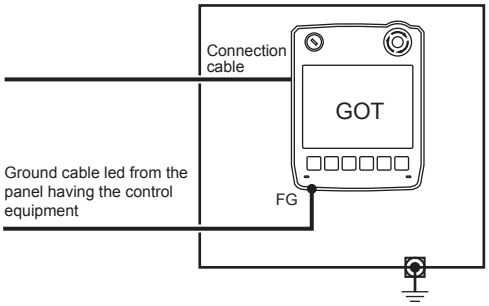
</td>
<td>A single ground cable is led from the panel having the control equipment such as PLC to the panel having the GOT.</td>
<td>☐ Led
☐ Not led</td>
</tr>
<tr>
<td rowspan="2">Measure for the ground cable led
Fig. A
 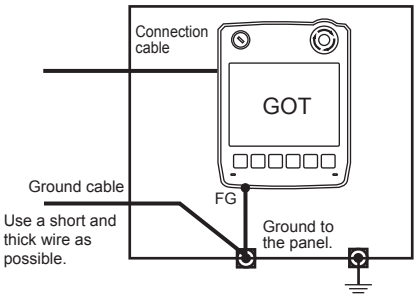

Fig. B
 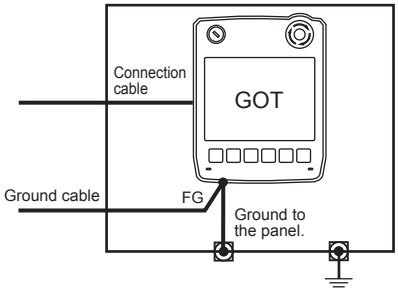
</td>
<td>Connecting the ground cable to the panel having the GOT as shown in Fig. A to reduce the potential difference may prevent the malfunction.
When wiring as shown in Fig. A is difficult, perform wiring as shown in Fig. B.</td>
<td>☐ Effective
☐ Ineffective</td>
</tr>
<tr>
<td>Fig. C
 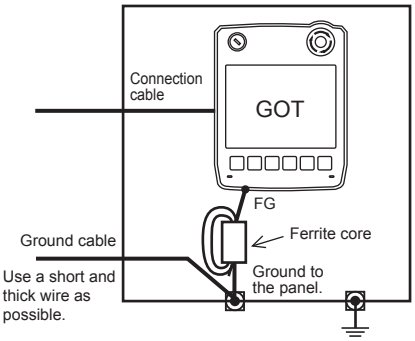

Fig. D
 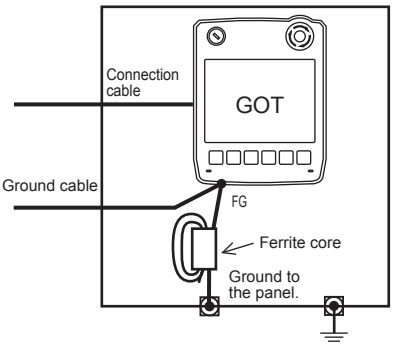
</td>
<td>Attaching the ferrite core to the ground cable connected to the panel having the GOT as shown in Fig. C reduces the influence of noise.
When wiring as shown in Fig. C is difficult, perform wiring as shown in Fig. D.</td>
<td>☐ Effective
☐ Ineffective</td>
</tr>
</table>

(7) Power supply system

Current status 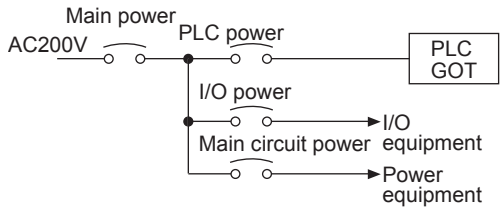	The power from the same system is used for the GOT, I/O equipment (such as relay), and power equipment (such as servo amplifier).	☐ Used ☐ Not Not used
Measure for the equipment for which the power from the same system is used 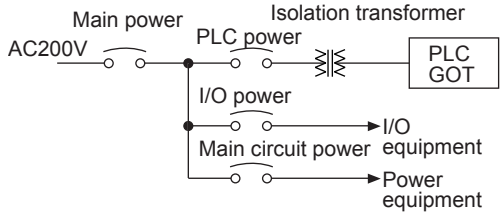	Connecting an isolation transformer as well as separating the wiring of the GOT power from that of the power of the I/O equipment and power equipment reduces the influence of noise.	☐ Effective ☐ Ineffective

■ System configuration check sheet

Fill in the brackets with the unit/module name.

(1) System configuration of the GOT			
(a) GOT main unit		[	]
(b) Communication interface		[	]
(c) Cable between the PLC and GOT		[	]
(d) Cable length		[	m]

(2) System configuration of the PLC			
(a) Power supply module		[	]
(b) CPU module		[	]
(c) Serial communication unit/computer link module	☐ Used ☐ Not used	[	]
(d) Network module	☐ Used ☐ Not used	[	]
(e) Interrupt module	☐ Used ☐ Not used	[	]
(f) Positioning module	☐ Used ☐ Not used	[	]
(g) Number of extension stages		[	stages]
(h) If any other module etc. is used, please describe it.			

Entry area for recurrence (when the malfunction occurred after the action is taken)

(3) Describe the operation situation when freezing of the screen or faulty display of the GOT has reoccurred.

20.2 Error Message and System Alarm

This chapter describes the error message and system alarm displayed in the GOT.
As the error code and error message displaying functions when an error occurs at the GOT, controller or network, there are two kinds: system alarm and advanced system alarm.
For details of the system alarm and advanced system alarm, refer to the following.

GT Designer3 Version1 Screen Design Manual (Functions)

POINT

Error code and channel No.

- Error codes can also be confirmed in the error code storage area of the system information function.
- The channel No. where an error is occurring can be confirmed with the GOT special register (GS262 to 264).
  For details of the system information and GOT special register, refer to the following manual.

GT Designer3 Version1 Screen Design Manual (Fundamentals)

20.2.1 Error contents display

This section describes the example for displaying error code and error message on GOT.

■ Popup-displaying the error code and error message (Advanced alarm popup display (System alarm))

If an error occurs, the error code and error message can be popup-displayed on the front of the monitor screen.
As alarms are popup-displayed regardless of the screen type, the error occurred will not be overlooked.

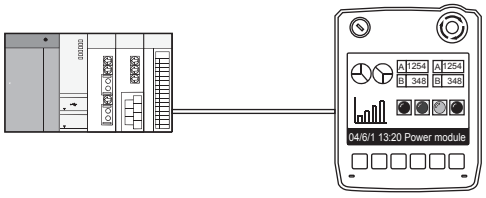

Pop up generated alarms regardless of the screen.

■ Displaying error code and error message in a list (Advanced system alarm display)

If error has occurred, error code and error message can be displayed on the list set with the screen.
Multiple errors can be displayed, or the history of display can be recorded.

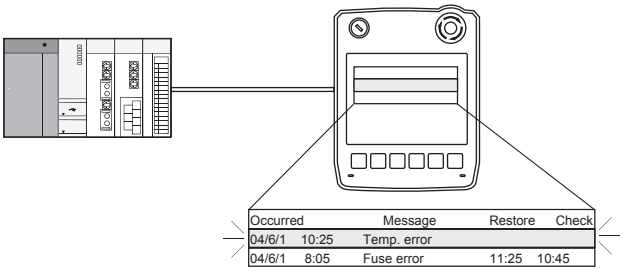

Create a screen to display alarms, and confirm the details of the alarms and take measures.

■ Checking error messages with the utility (Utility)

The error code and error message can be checked with the system alarm display of the utility when the object is not set.

☞ 15.3 System Alarm Display

Error code and reference manual

Error source	Error code	Description	Channel No. storage destination*1	Reference
Controller	0 to 99 (Value of D9008)	Error code of CPU (for ACPU)	GS263	User's manual of the ACPU connected with GOT
	100 to 299	Error code of the following controllers FXCPU*2 Third party PLC Temperature controller (OMRON temperature controller only)		User's manual of the controller connected with the GOT Deal with errors according to the error messages.
GOT*5	300 to 399	Error code of the GOT main unit function	GS262*4	☞ 20.2 Error Message and System Alarm
	400 to 499	Error code of the GOT communication function		
	500 to 699	Error code of the GOT main unit function		
Network	800 to 999	Error code of network	GS264	
CPU	1000 to 10000 (Value of SD0)	Error code of CPU (for QCPU, LCPU, QnACPU)	GS263	User's manual of the QCPU, LCPU and QnACPU connected with GOT
Motion controller	10001 to 10999	Error code of Motion controller (Q173D(S)CPU/Q172D(S)CPU/ Q170M(S)CPU)		*6
CNC C70	11000 to 11999	Error code of CNC (Q173NCCPU)		*7
Robot controller	12000 to 12999	Error code of Robot controller		*8
CPU	15000	Error code of RCPU		*9
	15100	Error code of FX5CPU		*10
Servo amplifier*3	20016 to 21099	Error code of servo amplifier		User's manual of the servo amplifier connected with GOT

*1 For details of GOT special registers (GS262 to 264), refer to the following manual.

☞ GT Designer3 Version1 Screen Design Manual (Fundamentals)

*2 The assigned error code for FXCPU is 100 to 109, which displays the status of M8060 to M8069.
(Example) When the error code (100) error occurs, correct the error according to the M8060 description.

*3 The error code displayed on GOT is calculated by changing the error code (Hexadecimal) displayed on the servo amplifier to the decimal number and adding 20000 to it.
When referring to the manual of servo amplifier by the error code displayed as a GOT system alarm, subtract 20000 from the GOT error code and change its lower three digits to the hexadecimal number.
(Example: When GOT system alarm is 20144, the error code of servo amplifier becomes 90H.)

*4 Channel No. will not be stored depending on the error code.
For channel No. storage availability for each error code, refer to the following.

☞ 20.2.2 List of error message/system alarm

*5 An alarmed drive cannot be confirmed in the system alarm regarding file access; however, it can be specified by confirming the file access error signal (b7 to 10) of system signal 2-2.

*6 The GOT displays the error code corresponding to an error occurring in the multiple CPU system.
Check the error details with MT Developer or MT Works2.
For error handling, refer to the manual of the motion controller.

*7 The GOT displays the error code corresponding to an error occurring in the multiple CPU system.
Check the error details with the CNC monitor.
For error handling, refer to the manual of the CNC.

*8 The GOT displays the error code corresponding to an error occurring in a robot controller in the multiple CPU system or a stand-alone robot controller.
Check the error details with RT ToolBox2.
For error handling, refer to the manual of the robot controller.

*9 The GOT displays the error code corresponding to an error occurring in an RCPU or Motion controller (MELSEC iQ-R series).
Check the error details with GX Works3 or MT Works2.
For error handling, refer to the manual of the RCPU or Motion controller (MELSEC iQ-R series).

*10 The GOT displays the error code corresponding to an error occurring in an FX5CPU.
Check the error details with GX Works3.
For error handling, refer to the manual of the FX5CPU.

20.2.2 List of error message/system alarm

The system alarm detected with GOT is shown below.

Error code	Error message	Action	Channel No. storage
303	Set monitor points too large. Decrease setting points.	Decrease the number of objects from the displayed screen. For the number of maximum objects for 1 screen, refer to the following. ☞ GT Designer3 Version1 Screen Design Manual (Fundamentals)	×
304	Set trigger points too large. Decrease setting points.	The number of objects using Sampling/Cycle during ON/Cycle during OFF exceeds 100. Decrease the number of objects.	×
306	No project data. Download screen data.	The project data is not downloaded or the screen data is not sufficient. Download the project data or screen data.	×
307	Monitor device not set	The monitor device of the object is not set. Set the monitor device of the object.	×
308	No comment data. Download comment.	The comment file does not exist. Create the comment file and download to GOT.	×
309	Device reading error. Correct device.	The error occurred when reading a continuous device. Correct the device.	×
310	Project data does not exist or out of range.	• Specified base screen / window screen does not exist in the project data. • Specified base screen / window screen is out of the permissible area. Specify the existing base screen / window screen.	×
311	No. of alarm has exceeded upper limit. Delete restored alarm.	The number of alarm histories that can be observed by the alarm history display function has exceeded the maximum points. Delete the restored history to decrease the number of alarm histories.	×
312	No. of sampling has exceeded upper limit. Delete collected data.	The collection frequency exceeded the upper limit when "Store Memory" and "Accumulate/Average" were set in the scatter graph. • Approve "Clear trigger" setup in the scatter graph. • Set the "Operation at frequency over time" to "Initialize and Continue" in scatter graph.	×
315	Device writing error. Correct device.	Error occurred while writing in the device. Correct the device.	×
316	Cannot display or input operation value. Review expression.	In indirect specification of comment/parts number, the data operation result exceeded the range in which device type can be expressed. Review the data operational expression, in order not exceeding the range in which the device type can be expressed.	×
317	Too high frequency of data collection. Review conditions.	Data of an object, to which [Collect data only when trigger conditions are satisfied] is set, are collected too frequently, or the number of objects has exceeded the number of objects collectable simultaneously. Set a longer cycle for trigger occurrence to each object. Make the settings so that 257 or more display triggers of objects, to which [Collect data only when trigger conditions are satisfied] is set, do not occur simultaneously.	×
320	Specified object does not exist or out of range.	The part file does not exist. Create the part file and download to GOT.	×
322	Dedicated device is out of range. Confirm device range.	The monitored device No. is out of the permissible area of the targeted PLC CPU. Set the device within the range that can be monitored by the monitored PLC CPU and parameter settings.	×

Error code	Error message	Action	Channel No. storage
330	Insufficient memory media capacity. Confirm M-card capacity.	Available memory of the SD card is insufficient. Confirm the available memory of the SD card. The available memory can be confirmed by system information screen, which is described in GT Designer3 Version1 Screen Design Manual (Fundamentals).	×
331	Memory card not installed or MCARD switched OFF	The SD card is not installed or in the drive access switch is OFF in drive. • Install the SD card in the specified drive. • Turn ON the access switch.	×
332	Memory media is not formatted.	SD card is not formatted or formatted incorrectly. Format the SD card.	×
333	Unable to overwrite. Memory card is write-protected.	SD card is write-protected. Cancel the write-protection of SD card.	×
334	Memory media error. Replace memory media.	SD card is faulty. Replace the SD card.	×
337	File output failed. Confirm output file path.	Either of the following folder or file with the name same as the file to be created exists in the storage destination SD card or USB memory. • Folder storing data • Write-protect file Delete the above folder or file, or change the name of the file to be created.	×
340	Printer error or power failure.	Printer is faulty or the printer power supply has not been turned on. • 1. Confirm the printer. • 2. Turn on the power supply of the printer.	×
341	Printer error	Printer is faulty or the printer power supply has not been turned on. • 1. Confirm the printer. • 2. Turn on the power supply of the printer.	×
345	BCD/BIN conversion error Correct data	Any value that cannot be converted to a BCD/BIN value is being displayed/input. • Change the device data to be displayed to the BCD value. • Correct the input value to the 4 digits integer.	○
351	Recipe file error. Confirm content of recipe file.	The contents of the recipe file are not normal. • Confirm the contents of the recipe files in the SD card or USB memory. • Reboot the GOT after deleting the recipe file in the SD card or USB memory (format).	×
352	Recipe file make error. Reboot GOT after inserting memory card.	Failed to generate recipe file. Reboot the GOT after installing the SD card or USB memory.	×
353	Unable to write Recipe file. Confirm memory card is inserted.	Failed to write in the recipe file. • Confirm the write-protection of the SD card or USB memory. • Confirm the contents of the SD card or USB memory. • Do not pull out the SD card or USB memory while recipe is operating.	×
354	Recipe file write error	Error occurred while writing in the recipe file. Do not pull out the SD card or USB memory while recipe is operating.	×
355	Recipe file read error	Error occurred while reading in the recipe file. • Do not pull out the SD card or USB memory while recipe is operating. • Confirm the contents (device value) of the recipe file in the SD card or USB memory.	×

Error code	Error message	Action	Channel No. storage
356	File system error occurred in PLC. Confirm file register.	Error occurred in the specified file register when executing the recipe function by specifying the file register name. • Execute the recipe function again after confirming the file register name. • Execute the recipe function again after formatting the PC memory in the specified PLC CPU drive with GX Developer.	×
357	Error in specified PLC drive Confirm PLC drive.	When executing the recipe function specifying the file register name, error occurred in PLC CPU drive. • Execute the recipe function again after confirming the specified PLC CPU drive. • Execute the recipe function again after formatting the PC memory in the specified PLC CPU drive with GX Developer.	×
358	PLC file access failure. Confirm PLC drive.	When the recipe function is executed specifying the file register name, PLC CPU file register could not be accessed. • Execute the recipe function again after confirming the specified PLC CPU drive / file register name. (When you specify drive 0, execute the recipe function again after changing to other drives.) • Confirm whether the SD card or USB memory are write-protected, and execute the recipe function again.	×
359	Processing from another peripheral device. Execute it after.	When the recipe function is executed specifying the file register name, other peripherals carry out the process to the file register. Wait until the processing of other peripherals end, and execute the recipe function again.	×
360	0 divisor division error. Confirm operation expression.	Zero division occurred by the data operational expression. Review the data operational expression so that the divisor should not become 0.	×
361	Specified device No. is out of range.	The entered file number is out of range. Check the entered file number, and enter a valid value (1 to 9999).	×
362	Invalid device value in time action setting	When controllers are controlled with the GOT's time action function, the set No. is our of range, or the set device values regarding the operation settings are out of range or invalid. Set valid values.	×
370	Upper and lower limit value error. Confirm value setting.	The setting of lower/upper limit value is [Upper limit ≤ Lower limit]. Correct the setting so as to be "Upper limit > Lower limit".	×
380	Insufficient USB drive capacity. Confirm the drive capacity.	Available memory of the USB memory is insufficient. Confirm the available memory of the USB memory, and increase the memory if it is low.	×
381	USB drive is not installed or in a removable state.	If the USB memory is not installed, install it. If the USB memory is ready to be removed, install it again.	×
382	USB drive is not formatted.	Memory card is not formatted or in a format not conformed by a GOT. Reformat the USB memory.	×
383	Unable to overwrite. USB drive is write-protected.	USB memory is write-protected. Cancel the write-protection of USB memory.	×
384	USB drive error. Replace USB drive.	USB memory is faulty. Replace the USB memory.	×

Error code	Error message	Action	Channel No. storage
402	Communication timeout. Confirm communication pathway or modules.	The time-out error occurred during communicating. • Confirm the cable omission and status of the PLC. Channel No. is not displayed in error code or error message in the case an error occurs when using the multi-channel function. Refer to the following manual to identify the channel No. in error. • This error may occur when the load of the PLC CPU becomes heavier when accessing other stations. In such a case, transfer the data of the other stations to the host station PLC CPU and monitor them at the host. • Put COM instruction when the PLC scanning is long.	○
403	SIO status error. Confirm communication pathway or modules.	Either of the overrun error, parity bit error or flaming error was generated when the RS-422 / RS-232 communication was received. Confirm the cable omission, status of the PLC.and the transmission speed of the computer link. Channel No. is not displayed in error code or error message in the case an error occurs when using the multi-channel function.	○
406	Specified station access is out of range. Confirm station no.	• Station numbers other than master/local station are specified at the CC-Link connection (via G4). • A PLC CPU other than QCPU is accessed. • Confirm the station number of the project data.	○
407	Accessed other network. Change network setting.	• When monitoring other networks Reconfigure the [Routing Information Setting] of GT Designer3 or the [Routing parameters] of GX Developer.	○
410	Cannot perform operation because of PLC run mode. stop the PLC.	The operation, which could not be performed during RUN of PLC CPU, was performed. Stop the PLC CPU.	○
411	Memory cassette is writeprotected. Check the memory cassette.	The memory cassette installed in the PLC CPU is EPROM or E^2PROM, and it is in a protected status. Confirm the memory cassette installed in PLC CPU.	○
412	Cannot read/write device protected by keyword. Remove keyword.	The key word is set in PLC CPU. Cancel the key word.	○
420	E71 specification is ASCII.	[ASCII code] is selected in [Ethernet operations] of the PLC side setting. Select [Binary code].	○
421	E71 is set as read-only. Clear setting.	The Ethernet module on the PLC side is set in read-only. Set the Ethernet module on the PLC side to write-enabled.	○
422	Not communicating between CPU and E71. Confirm CPU error.	PLC CPU error. Communication between PLC CPU and the PLC side Ethernet module impossible. Confirm whether there is error in PLC CPU by GX Developer etc. (Confirm buffer memory)	○

Error code	Error message	Action	Channel No. storage
423	Insufficient network table information. Add station no.	The station number set in the project data and the station number set in the switching station No. device do not exist in the Ethernet setting of GT Designer3. • Add the station number set in the project data to the Ethernet setting of GT Designer3. • When using the station No. switching function, check the data of the switching station No. device. When the station number specified in the switching station No. device is not set in the Ethernet setting, add the station number to the Ethernet setting. When the station number does not exist in the system, change the data of the switching station No. device. (Set the station number so that it becomes the same as the station number of the PLC side Ethernet module set in the parameter setting of GX Developer.)	○
424	Same sta. on GOT & project data. Review communication parameter.	The station number set in the GOT's utility is the same as the station number set in the Ethernet setting of GT Designer3 or GT Designer2 (the station number of the PLC side Ethernet module) or in the project data. Check the following contents so that the multiple station numbers should not be the same. • Check the GOT's station number in the GOT's utility. • Check the station number set in the project data. • Check the station number set in the Ethernet setting. (Set the station number so that it becomes the same as the station number of the PLC side Ethernet module set in the parameter setting of GX Developer.) • When using the station No. switching function, check the data of the switching station No. device.	○
425	A duplicate IP address has been detected. Confirm the setting.	The IP address of the GOT is the same as that of the controller. Change the IP address of the GOT or the controller.	○
448	PLC cannot handle as requested. Correct devices.	A device outside the range of PLC file registers and the buffer memory was specified. Correct the monitor device by setting file register of the PLC CPU.	○
449	Dedicated device is out of range. Confirm device range.	Set the address for the special function module in the GOT monitor available range. Set the device in the GOT monitor available range.	○
450	Path has changed or timeout occurred in redundant system.	The path has been switched or timeout occurred in the redundant system. • Check the PLC CPU to know if the path has been switched. • Check the cable connection status and the PLC CPU status. • This error may occur when the load of the PLC CPU becomes heavier when accessing other stations. In such a case, transfer the data of the other stations to the host station PLC CPU and monitor them at the host. • Perform one of the following operations if the PLC scanning time is long: COM instruction/Extension of END processing/Setting of the number of processing times for general data/Data update batch processing.	○
451	Q redundant system settings and current config. do not match.	Change the Q redundant setting in accordance with the actual Q redundant CPU system.	○
460	Communication unit error	• Reset the power of the GOT. • Replace the unit.	○

Error code	Error message	Action	Channel No. storage
480	Communication channel not set. Set channel number on Utility.	Channel (CH.No.1 to 2) to communicate with a controller is not set. • After setting the Communication Settings on the GT Designer3, download it to the GOT. • Change the channel assignment in the Communication Setting on the utility.	○*1
486	Communication unit not corresponded to set communication driver.	The communication driver set in the Communication Setting and the communication built into the GOT do not match. • Check whether the communication driver set in the Communication Setting is correct.	○*1
487	Please turn on the PLC and the GOT again.	Turn the power of the PLC and GOT on again.	○
489	Inactive channel has been selected at Communication Settings.	Inactive channel No. has been set in the project data. • Check whether any unnecessary channel No. has been set in the project data. • Check whether channel Nos. set in the project data are set in the Communication Settings.	○*1
500	Warning! Built-in battery voltage is low.	The voltage of the GOT built-in battery is decreased. Replace the GOT built-in battery.	×
510	Clock data input out of range	The value that is input as clock data is out of the input enabled range. In this case, the input value is not accepted. Confirm the input range of the value to be input as clock data, and input the proper value again.	×
520	Insufficient Flash ROM capacity	The capacity for the buffering area is insufficient in the build in flash memory • Confirm whether there are no mistakes in specified buffering area size.	×
521	Insufficient user memory (RAM) capacity	The capacity for the buffering area is insufficient in the user memory (RAM) • Confirm whether there are no mistakes in specified buffering area size.	×
522	Unnecessary file deleted to create new file.	The old file of different contents has been deleted and a new file has been created. Note that the old file is deleted and the new file is created if the file of the same name with different contents exists when creating files.	×
524	Device writing error. Correct device.	Error occurred while writing in the device. Correct the device.	×
525	Unable to read/write alarm log files under different projects.	Unable to read the alarm log file saved by the different project. Confirm where to store the alarm log file and alarm log file.	×
526	File conversion failed.	The file specified for the file conversion does not exist. Check the settings for specifying a file to be converted.	×
528	Error in SRAM. Failed to write data.	The error may be caused by a failure in the GOT main unit. Please consult your local Mitsubishi (Electric System) Service center or representative.	×
529	Data error in SRAM. Check the battery life.	Error in SRAM data due to battery voltage low, etc. Confirm the battery status.	×
530	Improper monitor device. Confirm monitor channel.	The channel of the specified monitor target does not exist or the channel is not the monitor target. Confirm the monitor target channel of the screen data.	×
535	Cannot open image file.	Confirm whether any file exists in the SD card or USB memory.	×
536	Image file error or invalid file format.	• Confirm whether image files in the SD card or USB memory are normal. • Confirm whether any image file of invalid format is stored.	×

Error code	Error message	Action	Channel No. storage
540	Auto repeat error. Confirm system information.	Error occurred while executing the auto repeat function of the touch switch object. Confirm the following. • Confirm that the other system error has not occurred during auto repeat. • Confirm that any error information is not stored in the system information/GS during auto repeat.	×
570	Recipe device points too large.	The number of the set points of the recipe device exceeds the specified range. Put the number of the set points of the recipe device within the specified range.	×
571	Capacity shortage of user memory (RAM)	There is no empty area/space in D drive. Format the D drive in the memory to secure free area.	×
581	Abnormal Advanced recipe file	Advanced Recipe cannot be executed for advanced recipe file with incorrect contents. Delete the advanced recipe file from the SD card or USB memory.	×
582	Cannot generate Advanced recipe file.	Cannot generate advanced recipe file. Confirm the following and execute recipe processing again. • Confirm whether the SD card or USB memory is installed. • Confirm whether the SD card access switch of the GOT is ON. • Confirm the available memory of the SD card or USB memory.	×
583	Unable to save device value to Advanced recipe file.	Unable to save device value to advanced recipe file. • Confirm the write-protection of the SD card or USB memory. • Confirm whether the attribute of saving file is for reading only.	×
584	Advance recipe file save error	An error has occurred during the advanced recipe file writing. Do not pull out the SD card or USB memory while the Advanced Recipe is operating.	×
585	Advanced recipe file upload error	An error has occurred during the advanced recipe file reading. Do not pull out the SD card or USB memory while the Advanced Recipe is operating.	×
586	Specified Advanced recipe number does not exist.	The advanced recipe of non-existing number is about to be executed. Execute advanced recipe of existing number.	×
587	Specified record number does not exist.	The advanced record of non-existing number is about to be executed. Execute record of existing number.	×
588	Cannot save recipe data to read only record.	Saving recipe is about to be executed to the record of which recipe device value cannot be edited. Make the recipe device value of the record editable with Advanced Recipe Setting of GT Designer3 or specify the record of which recipe device value can be edited.	×
589	Recipe device save error. Recipe file does not exist.	Saving recipe is about to be executed to the advanced recipe setting that is set for not using file. Specify the advanced recipe setting that uses file.	×
590	Recipe device upload error. Recipe device value does not exist.	Loading recipe is about to be executed to the record of which recipe device value is not set. Specify the record of which recipe device value is set.	×
591	Advanced Recipe error. Check recipe data.	The advanced recipe setting is not correct. Confirm the advanced recipe setting of the project data and download it to the GOT again.	×
595	Logging file error.	Logging file error. When collecting data again, delete logging files and management files.	×

Error code	Error message	Action	Channel No. storage
596	Logging setting does not exist or setting value error.	The logging setting specified in the historical trend graph setting does not exist. Review the historical trend graph setting and specify a logging setting that exists.	×
605	USB device I/F error	The error may be caused by a failure in the GOT. Please consult your local Mitsubishi (Electric System) Service center or representative.	×
611	Improper job files. Confirm job setting.	The contents for job files are unmatched with the settings for job files. Check if there are mistakes in the settings on the setting screen.	×
612	Cannot access Logging Files Check the memory card	• Insert a SD card or USB memory. • Turn on the SD card access switch. • If the SD card or USB memory have unnecessary files, delete the files.	×
613	Error in writing logfile	• Insert a SD card or USB memory. • Turn on the SD card access switch. • Check if the SD card or USB memory is writable.	×
614	Error in reading logfile	• Insert a SD card or USB memory. • Turn on the SD card access switch. • Check if the SD card or USB memory is readable.	×
615	Cannot connect to MES Server. Check the Server.	The server does not work normally or the connection path to the server is made up incorrectly. • Check the operating conditions of the server. • Check the network to the server.	×
616	Cannot connect to SNTP Server. Check the Server.	The settings for the SNTP server are wrong or the network to the SNTP server is made up incorrectly. • Check the operating conditions of the STNP server. • Check the network to the SNTP server.	×
640	An error occurred in a FTP client process.	Reconfigure the GOT (FTP client) setting. Check the operating status and network line of the FTP server. For the error details, check the GOT special register GS989 (FTP communication error notification).	×
800	Abnormal module status	Refer to explanations of SB0020 on the applicable network manual.	○
801	Abnormal baton passing status	Refer to explanations of SB0047 on the applicable network manual.	○
802	Abnormal cyclic transmission status	Refer to explanations of SB0049 on the applicable network manual.	○
803	Transient error	Refer to explanations of SB00EE on the applicable network manual.	○
850	CC-Link switch setting error	• Check if the switch settings have no error. • Check error codes stored in SW006A. • Refer to explanations of SB006A on the applicable network manual	○
851	Abnormal cyclic transmission status	• Check if terminating resistors are connected. • Check error codes for the PLC CPU. • Check the parameter for the PLC CPU on the master station. • Check the error status of the master station. • Refer to explanations of SB006E on the applicable network manual.	○
852	Abnormal host line status	• Check if the cable is unplugged or not. • Refer to explanations of SB0090 on the applicable network manual.	○
853	Transient error	• Check the transient error occurrence status for each station stored in SW0094 to SW0097. • Refer to explanations of SB0094.	○

*1 When an error occurs, "FFH" is stored to the channel No.

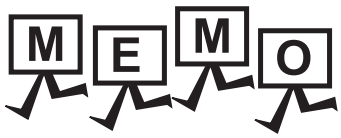
MEMO

MITSUBISHI PLC CONNECTIONS

When connecting GT14 Handy and Mitsubishi PLCs, refer to the followings for the device range that can be set,the access range for monitoring and how to monitor redundant systems.

- Device Range that Can Be Set

  ☞ GOT1000Series Connection Manual (Mitsubishi Products) (for GT Works3)
  2. DEVICE RANGE THAT CAN BE SET

  ☞ GT Designer3 Version1 Screen Design Manual (Fundamentals)

- Accessible range for monitoring

  ☞ GOT1000Series Connection Manual (Mitsubishi Products) (for GT Works3)
  3. ACCESS RANGE FOR MONITORING

- How to monitor redundant system

  ☞ GOT1000Series Connection Manual (Mitsubishi Products) (for GT Works3)
  4. HOW TO MONITOR REDUNDANT SYSTEM

21. DIRECT CONNECTION TO CPU . . . . . 21 - 1
22. COMPUTER LINK CONNECTION . . . . . 22 - 1
23. ETHERNET CONNECTION. . . . . 23 - 1
24. CC-Link CONNECTION (Via G4). . . . . 24 - 1

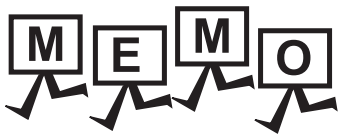
MEMO

21. DIRECT CONNECTION TO CPU

21.1 Connectable Model List

The following table shows the connectable models.

Series	Model	Clock	Communication type	GT14 Handy	Refer to
MELSEC iQ-R Series	R04CPU	○	RS-232 RS-422	×	-
	R08CPU				
	R16CPU				
	R32CPU				
	R120CPU				
	R08PCPU				
	R16PCPU				
	R32PCPU				
	R120PCPU				
	R04ENCPU				
	R08ENCPU				
	R16ENCPU				
	R32ENCPU				
	R120ENCPU				
	R08SFCPU				
	R16SFCPU				
	R32SFCPU				
	R120SFCPU				
Motion controller CPU (MELSEC iQ-R Series)	R16MTCPU	○	RS-232 RS-422	×	-
	R32MTCPU				
C Controller module (MELSEC iQ-R Series)	R12CCPU-V	○	RS-232 RS-422	×	-
MELSEC iQ-F Series	FX5U FX5UC	○	RS-232 RS-422	○	21.2.5

(Continued to next page)

Series	Model	Clock	Communication type	GT14 Handy	Refer to
MELSEC-Q (Q mode)	Q00JCPU	○	RS-232 RS-422	○	21.2.1
	Q00CPU*1 Q01CPU*1 Q02CPU*1				
	Q02HCPU*1 Q06HCPU*1 Q12HCPU*1 Q25HCPU*1				
	Q02PHCPU Q06PHCPU Q12PHCPU Q25PHCPU	○	RS-232 RS-422	○	
	Q12PRHCPU (Main base)				
	Q25PRHCPU (Main base)				
	Q12PRHCPU (Extension base)	○	-	×	-
	Q25PRHCPU (Extension base)				
	Q00UJCPU	○	RS-232 RS-422	○	21.2.1
	Q00UCPU Q01UCPU Q02UCPU				
	Q03UDCPU				
	Q04UDHCPU Q06UDHCPU Q10UDHCPU Q13UDHCPU Q20UDHCPU Q26UDHCPU				
	Q03UDECPU Q04UDEHCPU Q06UDEHCPU Q10UDEHCPU Q13UDEHCPU Q20UDEHCPU Q26UDEHCPU Q50UDEHCPU Q100UDEHCPU	○	RS-232	○*2	21.2.1
	Q03UDVCPU Q04UDVCPU Q06UDVCPU Q13UDVCPU Q26UDVCPU				
C Controller module (Q Series)	Q12DCCPU-V*4 Q24DHCCPU-V/VG Q24DHCCPU-LS Q26DHCCPU-LS	○	RS-232	○*2	21.2.1
MELSEC-QS	QS001CPU	○	-	×	-
MELSEC-L	L02CPU*3 L06CPU*3 L26CPU*3 L26CPU-BT*3 L02CPU-P*3 L06CPU-P*3 L26CPU-P*3 L26CPU-PBT*3 L02SCPU L02SCPU-P	○	RS-232 RS-422	○	21.2.2
MELSEC-Q (A mode)	Q02CPU-A Q02HCPU-A Q06HCPU-A	○	RS-232 RS-422	○	21.2.1
MELSEC-QnA (QnACPU)	Q2ACPU Q2ACPU-S1 Q3ACPU Q4ACPU Q4ARCPU	○	RS-422	○	21.2.3
MELSEC-QnA (QnASCPU)	Q2ASCPU Q2ASCPU-S1 Q2ASHCPU Q2ASHCPU-S1	○	RS-422	○	21.2.3
MELSEC-A (AnCPU)	A2UCPU A2UCPU-S1 A3UCPU A4UCPU A2ACPU A2ACPUP21 A2ACPUR21 A2ACPU-S1 A2ACPUP21-S1 A2ACPUR21-S1 A3ACPU A3ACPUP21 A3ACPUR21	○	RS-422	○	21.2.4

(Continued to next page)

*1 For the multiple CPU system configuration, use CPU function version B or later.
*2 Access via the QCPU (RS-232) in the multiple CPU system.
*3 When connecting in direct CPU connection, the adapter L6ADP-R2 is required.
*4 Use a module with the upper five digits of the serial No. later than 12042.

Series	Model	Clock	Communication type	GT14 Handy	Refer to
MELSEC-A (AnCPU)	A1NCPU*1	○	RS-422	○	21.2.4
	A1NCPUP21*1				
	A1NCPUR21*1				
	A2NCPU*1				
	A2NCPUP21*1				
	A2NCPUR21*1				
	A2NCPU-S1*1				
	A2NCPUP21-S1*1				
	A2NCPUR21-S1*1				
	A3NCPU*1				
	A3NCPUP21*1				
	A3NCPUR21*1				
MELSEC-A (AnSCPU)	A2USCPU	○	RS-422	○	21.2.4
	A2USCPU-S1				
	A2USHCPU-S1				
	A1SCPU				
	A1SCPUC24-R2				
	A1SHCPU				
	A2SCPU*1				
	A2SHCPU				
	A1SJCPU				
	A1SJCPU-S3				
	A1SJHCPU				
MELSEC-A	A0J2HCPU*2	×	RS-422	○	21.2.4
	A0J2HCPUP21*2				
	A0J2HCPUR21*2				
	A0J2HCPU-DC24*2				
	A2CCPU*2	○	RS-422	○	21.2.4
	A2CCPUP21				
	A2CCPUR21				
	A2CCPUC24				
	A2CCPUC24-PRF				
	A2CJCPU-S3				
	A1FXCPU				
Motion controller CPU (Q Series)	Q172CPU*3*4	○	RS-232 RS-422	○	21.2.1
	Q173CPU*3*4				
	Q172CPUN*3				
	Q173CPUN*3				
	Q172HCPU	○	RS-232	○*5	21.2.1
	Q173HCPU				
	Q172DCPU				
	Q173DCPU				
	Q172DCPU-S1				
	Q173DCPU-S1				
	Q172DSCPU				
	Q173DSCPU				
	Q170MCPU	○	RS-232	○	21.2.8
	Q170MSCPU				
	Q170MSCPU-S1				
Motion controller CPU (A Series)	A273UCPU	○	RS-422	○	21.2.4
	A273UHCPU	○	RS-422	○	
	A273UHCPU-S3				
	A373UCPU	○	RS-422	○	
	A373UCPU-S3				
	A171SCPU				
	A171SCPU-S3	○	RS-422	○	21.2.4
	A171SCPU-S3N				
	A171SHCPU				
	A171SHCPUN				
	A172SHCPU				
	A172SHCPUN				
	A173UHCPU				
	A173UHCPU-S1				
MELSEC-WS	WS0-CPU0	×	RS-232	○	21.2.7
	WS0-CPU1				
	WS0-CPU3				
MELSECNET/H Remote I/O station	QJ72LP25-25	×	RS-232	○	21.2.1
	QJ72LP25G				
	QJ72BR15				
CC-Link IE Field Network head module	LJ72GF15-T2	×	-	×	-
CC-Link IE Field Network Ethernet adopter module	NZ2GF-ETB	×	-	×	-
CNC C70	Q173NCCPU	○	RS-232	○*5	21.2.1
Robot controller	CRnQ-700 (Q172DRCPU) CR750-Q (Q172DRCPU) CR751-Q (Q172DRCPU)	○	RS-232	○*5	21.2.1
MELSEC-FX	FX0, FX0S, FX0N FX1	×	RS-422	○	21.2.6
	FX2, FX2C	×*6	RS-422	○	
	FX1S, FX1N, FX2N, FX1NC	○	RS-232 RS-422	○	
	FX2NC	×*6	RS-232 RS-422	○	
	FX3S FX3G (C) FX3GE FX3U (C)	○	RS-232 RS-422	○	

*1 When monitoring AnNCPU or A2SCPU, only the following or later software versions is used to write to the CPU.
- AnNCPU(S1) with link: Version L or later, AnNCPU(S1) without link: Version H or later
- A2SCPU: Version H or later

*2 When monitoring A0J2HCPU, A2CCPU or A2SCPU, only the following or later software version is used to write to the CPU.
- A0J2HCPU (with/without link): Version E or later
- A0J2HCPU-DC24: Version B or later
- A2CCPU, A2SCPU: Version H or later

*3 When using SV13, SV22, or SV43, use the motion controller CPU on which any of the following main OS version is installed.
- SW6RN-SV13Q□: 00E or later
- SW6RN-SV22Q□: 00E or later
- SW6RN-SV43Q□: 00B or later

*4 Use main modules with the following product numbers.
- Q172CPU: Product number K******* or later
- Q173CPU: Product number J******* or later

*5 Access via the QCPU (RS-232) in the multiple CPU system.

*6 It is available by installing the real time clock function board or the EEPROM memory with the real time clock function.

21.2 System Configuration

21.2.1 Connecting to QCPU

Communication driver

Serial (MELSEC)

(1) When using the connector conversion box

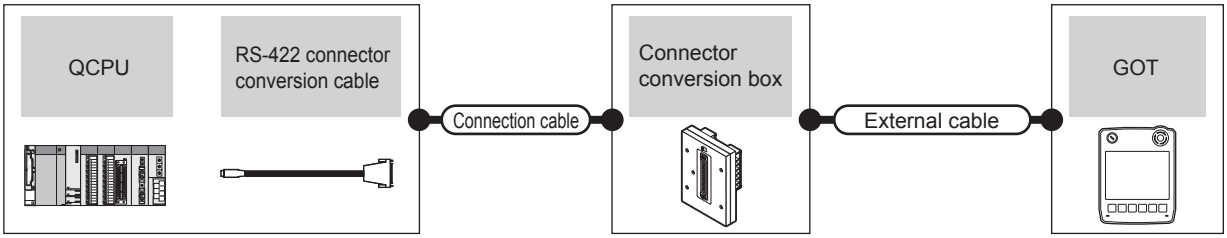

PLC			Connection cable	Connector conversion box	External cable	GOT model	Total distance	Number of connectable equipment
Model	RS-422 connector conversion cable	Communication type	Cable model					
MELSEC-Q	-	RS-232	GT11H-C30R2-6P (3m)	GT11H-CNB-37S	GT11H-C30-37P (3m)	GT14 Handy	6m	1 GOT for 1 PLC
	FA-CNV2402CBL (0.2m) FA-CNV2405CBL (0.5m)	RS-422	GT01-C30R4-25P (3m) GT01-C100R4-25P (10m)		GT11H-C30-37P (3m) GT11H-C60-37P (6m) GT11H-C100-37P (10m)	GT14 Handy	13.5m	

(2) When using the external cable (GT11H-C□□□-37P)

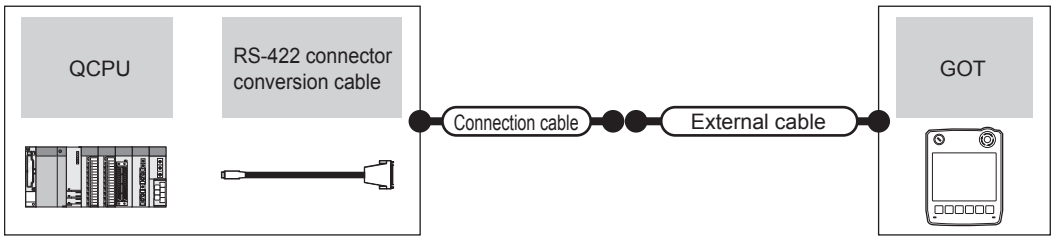

PLC			Connection cable	External cable	GOT model	Total distance	Number of connectable equipment
Model	RS-422 connector conversion cable	Communication type	Cable model				
MELSEC-Q	-	RS-232	GT11H-C15R2-6P (1.5m)	GT11H-C30-37P (3m)	GT14 Handy	6m	1 GOT for 1 PLC
	FA-CNV2402CBL (0.2m) FA-CNV2405CBL (0.5m)	RS-422	GT11H-C15R4-25P (1.5m)	GT11H-C30-37P (3m) GT11H-C60-37P (6m) GT11H-C100-37P (10m)	GT14 Handy	13.5m	

21.2.2 Connecting to LCPU

Communication driver

Serial (MELSEC)

(1) When using the connector conversion box

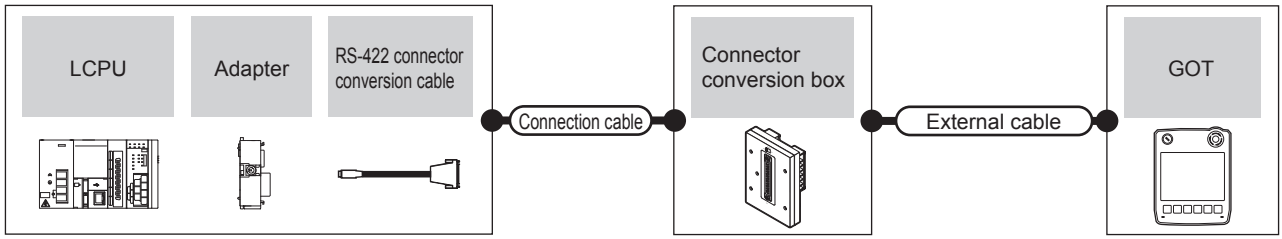

PLC				Connection cable	Connector conversion box	External cable	GOT model	Total distance	Number of connectable equipment
Model	Adapter	RS-422 connector conversion cable	Communication type	Cable model					
L02CPU L06CPU L26CPU L26CPU-BT L02CPU-P L06CPU-P L26CPU-P L26CPU-PBT	L6ADP-R2	-	RS-232	GT11H-C30R2-6P (3m)	GT11H-CNB-37S	GT11H-C30-37P (3m)	GT14 Handy	6m	1 GOT for 1 PLC
	L6ADP-R2	FA-CNV2402CBL (0.2m) FA-CNV2405CBL (0.5m)	RS-422	GT01-C30R4-25P (3m) GT01-C100R4-25P (10m)	GT11H-CNB-37S	GT11H-C30-37P (3m) GT11H-C60-37P (6m) GT11H-C100-37P (10m)	GT14 Handy	13.5m	
	L6ADP-R4	-	RS-422	User preparing RS422 connection diagram 1)	GT11H-CNB-37S	GT11H-C30-37P (3m) GT11H-C60-37P (6m) GT11H-C100-37P (10m)	GT14 Handy	13.5m	
L02SCPU L02SCPU-P	-	-	RS-232	GT11H-C30R2-6P (3m)	GT11H-CNB-37S	GT11H-C30-37P (3m)	GT14 Handy	6m	1 GOT for 1 PLC
	-	FA-CNV2402CBL(0.2m) FA-CNV2405CBL (0.5m)	RS-422	GT01-C30R4-25P (3m) GT01-C100R4-25P (10m)	GT11H-CNB-37S	GT11H-C30-37P (3m) GT11H-C60-37P (6m) GT11H-C100-37P (10m)	GT14 Handy	13.5m	

(2) When using the external cable (GT11H-C□□□-37P)

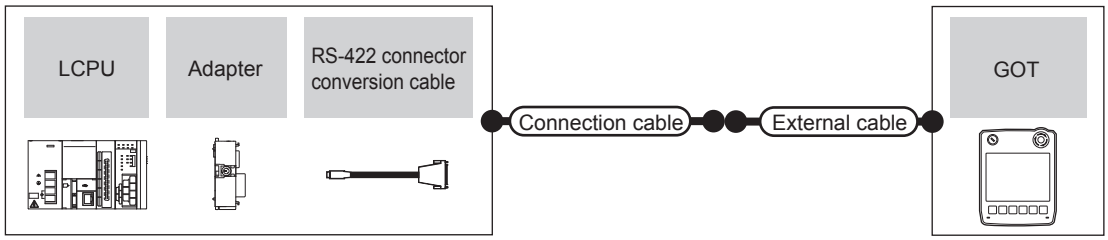

PLC				Connection cable	External cable	GOT model	Total distance	Number of connectable equipment
Model	Adapter	RS-422 connector conversion cable	Communication type	Cable model				
L02CPU L06CPU L26CPU L26CPU-BT L02CPU-P L06CPU-P L26CPU-P L26CPU-PBT	L6ADP-R2	-	RS-232	GT11H-C15R2-6P (1.5m)	GT11H-C30-37P (3m)	GT14 Handy	6m	1 GOT for 1 PLC
	L6ADP-R2	FA-CNV2402CBL (0.2m) FA-CNV2405CBL (0.5m)	RS-422	GT11H-C15R4-25P (1.5m)	GT11H-C30-37P (3m) GT11H-C60-37P (6m) GT11H-C100-37P (10m)	GT14 Handy	13.5m	
	L6ADP-R4	-	RS-422	User preparing RS422 connection diagram 2)	GT11H-C30-37P (3m) GT11H-C60-37P (6m) GT11H-C100-37P (10m)	GT14 Handy	13.5m	
L02SCPU L02SCPU-P	-	-	RS-232	GT11H-C15R2-6P (1.5m)	GT11H-C30-37P (3m)	GT14 Handy	6m	1 GOT for 1 PLC
	-	FA-CNV2402CBL (0.2m) FA-CNV2405CBL (0.5m)	RS-422	GT11H-C15R4-25P (1.5m)	GT11H-C30-37P (3m) GT11H-C60-37P (6m) GT11H-C100-37P (10m)	GT14 Handy	13.5m	

(3) When using the external cable (GT11H-C□□□)

PLC			External cable	GOT model	Total distance	Number of connectable equipment
Model	Adapter	Communication type				
L02CPU L06CPU L26CPU L26CPU-BT L02CPU-P L06CPU-P L26CPU-P L26CPU-PBT	L6ADP-R2	RS-422	GT11H-C30(3m) GT11H-C60(6m) GT11H-C100(10m) User preparing RS422 connection diagram 3)	GT14 Handy	13.5m	1 GOT for 1 PLC

21.2.3 Connecting to QnACPU

Communication driver

Serial (MELSEC)

(1) When using the connector conversion box

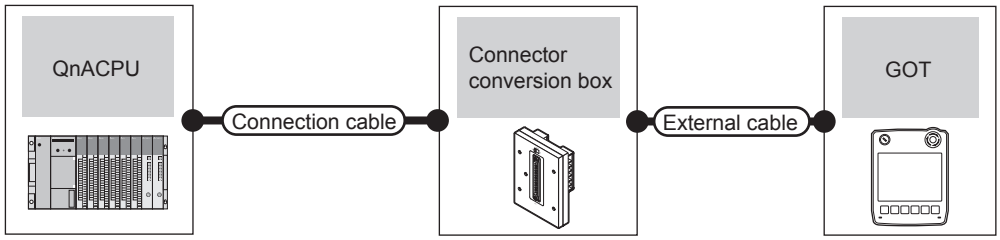

PLC		Connection cable	Connector conversion box	External cable	GOT model	Total distance	Number of connectable equipment
Model	Communication type	Cable model					
MELSEC-QnA	RS-422	GT01-C30R4-25P(3m) GT01-C100R4-25P(10m)	GT11H-CNB-37S	GT11H-C30-37P (3m) GT11H-C60-37P (6m) GT11H-C100-37P (10m)	GT14 Handy	13m	1 GOT for 1 PLC

(2) When using the external cable (GT11H-C□□□-37P)

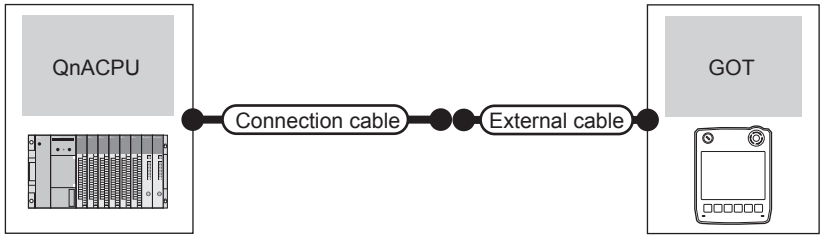

PLC		Connection cable	External cable	GOT model	Total distance	Number of connectable equipment
Model	Communication type	Cable model				
MELSEC-QnA	RS-422	GT11H-C15R4-25P (1.5m)	GT11H-C30-37P (3m) GT11H-C60-37P (6m) GT11H-C100-37P (10m)	GT14 Handy	13m	1 GOT for 1 PLC

21.2.4 Connecting to ACPU

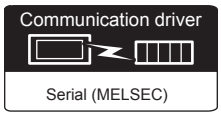

(1) When using the connector conversion box

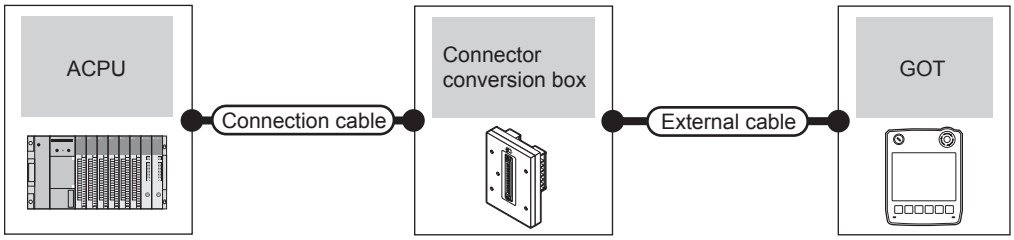

PLC		Connection cable	Connector conversion box	External cable	GOT model	Total distance	Number of connectable equipment
Model	Communication type	Cable model					
MELSEC-A	RS-422	GT01-C30R4-25P(3m) GT01-C100R4-25P(10m)	GT11H-CNB-37S	GT11H-C30-37P (3m) GT11H-C60-37P (6m) GT11H-C100-37P (10m)	GT14 Handy	13m	1 GOT for 1 PLC

(2) When using the external cable (GT11H-C□□□-37P)

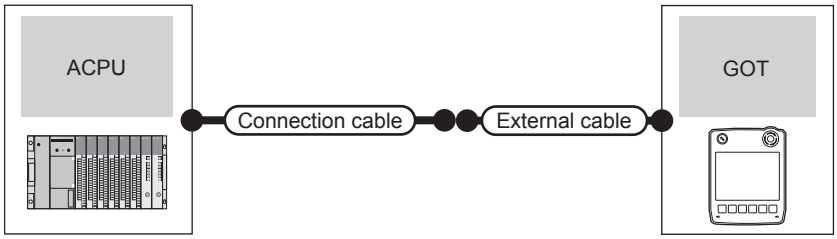

PLC		Connection cable	External cable	GOT model	Total distance	Number of connectable equipment
Model	Communication type	Cable model				
MELSEC-A	RS-422	GT11H-C15R4-25P (1.5m)	GT11H-C30-37P (3m) GT11H-C60-37P (6m) GT11H-C100-37P (10m)	GT14 Handy	13m	1 GOT for 1 PLC

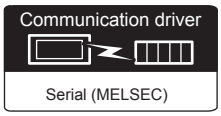

■ When using the connector conversion box

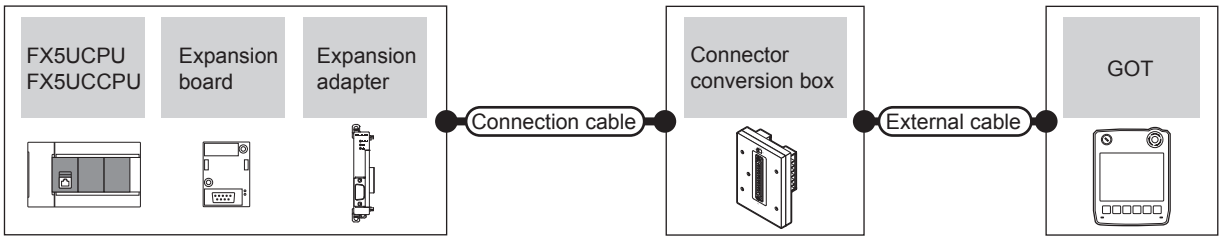

(1) When connecting to FX5U (RS-422 connection)

PLC				Connection cable	Connector conversion box	External cable	GOT model	Total distance	Number of connectable equipment*1
Model	Expansion board	Expansion adapter	Communication type	Cable model Connection diagram number					
FX5U	FX5-422-BD-GOT	-	RS-422	GT01-C10R4-8P (1m) GT01-C30R4-8P (3m) GT01-C100R4-8P (10m)	GT11H-CNB-37S	GT11H-C30-37P (3m) GT11H-C60-37P (6m) GT11H-C100-37P (10m)	GT14 Handy	13m	1 GOT for 1 Expansion board
	-	-	RS-422	User preparing RS422 connection diagram 4)			GT14 Handy	13m	1 GOT for 1 PLC built-in port
	FX5-485-BD	-	RS-422	User preparing RS422 connection diagram 4)			GT14 Handy	13m	1 GOT for 1 Expansion board
	-	FX5-485ADP	RS-422	User preparing RS422 connection diagram 4)			GT14 Handy	13m	1 GOT for 1 Expansion adapter

*1 When the expansion board (communication board) and the expansion adapter are connected, a GOT and a peripheral such as a PC with GX Works3 installed can be connected to them individually.

(2) When connecting to FX5U (RS-232 connection)

PLC				Connection cable	Connector conversion box	External cable	GOT model	Total distance	Number of connectable equipment*1
Model	Expansion board	Expansion adapter	Communication type	Cable model Connection diagram number					
FX5U	FX5-232-BD	-	RS-232	GT01-C30R2-9S (3m) or User preparing RS232 connection diagram 1)	GT11H-CNB-37S	GT11H-C30-37P (3m)	GT14 Handy	6m	1 GOT for 1 Expansion board
	-	FX5-232-ADP	RS-232	GT01-C30R2-9S (3m) or User preparing RS232 connection diagram 1)			GT14 Handy	6m	1 GOT for 1 Expansion adapter

*1 When the expansion board (communication board) and the expansion adapter are connected, a GOT and a peripheral such as a PC with GX Works3 installed can be connected to them individually.

(3) When connecting to FX5UC (RS-422 connection)

PLC				Connection cable	Connector conversion box	External cable	GOT model	Total distance	Number of connectable equipment*1
Model	Expansion board	Expansion adapter	Communication type	Cable model Connection diagram number					
FX5UC	-	-	RS-422	User preparing RS422 connection diagram 4)	GT11H-CNB-37S	GT11H-C30-37P (3m) GT11H-C60-37P (6m) GT11H-C100-37P (10m)	GT14 Handy	13m	1 GOT for 1 PLC built-in port
	-	FX5-485ADP	RS-422	User preparing RS422 connection diagram 4)			GT14 Handy	13m	1 GOT for 1 Expansion adapter

*1 When the expansion board (communication board) and the expansion adapter are connected, a GOT and a peripheral such as a PC with GX Works3 installed can be connected to them individually.

(4) When connecting to FX5UC (RS-232 connection)

PLC				Connection cable	Connector conversion box	External cable	GOT model	Total distance	Number of connectable equipment*1
Model	Expansion board	Expansion adapter	Communication type	Cable model Connection diagram number					
FX5UC	-	FX5-232-ADP	RS-232	GT01-C30R2-9S (3m) or User preparing RS232 connection diagram 1)	GT11H-CNB-37S	GT11H-C30-37P (3m)	GT14 Handy	6m	1 GOT for 1 Expansion adapter

*1 When the expansion board (communication board) and the expansion adapter are connected, a GOT and a peripheral such as a PC with GX Works3 installed can be connected to them individually.

■ When using the external cable (GT11H-C□□□-37P)

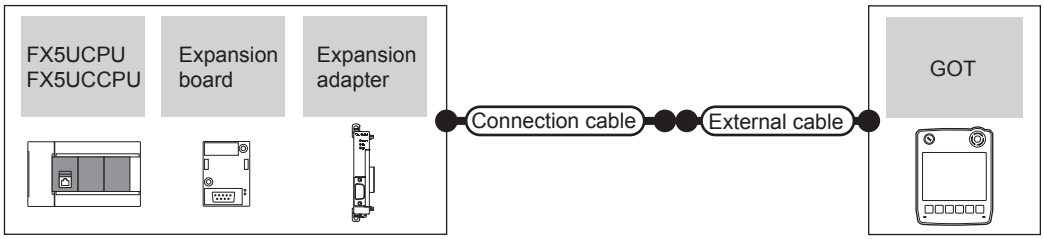

(1) When connecting to FX5U (RS-422 connection)

PLC				Connection cable	External cable	GOT model	Total distance	Number of connectable equipment*1
Model	Expansion board	Expansion adapter	Communication type	Cable model Connection diagram number				
FX5U	-	-	RS-422	User preparing RS422 connection diagram 5)	GT11H-C30-37P (3m) GT11H-C60-37P (6m) GT11H-C100-37P (10m)	GT14 Handy	13m	1 GOT for 1 PLC built-in port
	FX5-485-BD	-	RS-422	User preparing RS422 connection diagram 5)		GT14 Handy	13m	1 GOT for 1 Expansion board
	-	FX5-485ADP	RS-422	User preparing RS422 connection diagram 5)		GT14 Handy	13m	1 GOT for 1 Expansion adapter

*1 When the expansion board (communication board) and the expansion adapter are connected, a GOT and a peripheral such as a PC with GX Works3 installed can be connected to them individually.

(2) When connecting to FX5U (RS-232 connection)

PLC				Connection cable	External cable	GOT model	Total distance	Number of connectable equipment*1
Model	Expansion board	Expansion adapter	Communication type	Cable model Connection diagram number				
FX5U	FX5-232-BD	-	RS-232	User preparing RS232 connection diagram 2)	GT11H-C30-37P (3m)	GT14 Handy	6m	1 GOT for 1 Expansion board
	-	FX5-232ADP	RS-232	User preparing RS232 connection diagram 2)	GT11H-C30-37P (3m)	GT14 Handy	6m	1 GOT for 1 Expansion board

*1 When the expansion board (communication board) and the expansion adapter are connected, a GOT and a peripheral such as a PC with GX Works3 installed can be connected to them individually.

(3) When connecting to FX5UC (RS-422 connection)

PLC				Connection cable	External cable	GOT model	Total distance	Number of connectable equipment*1
Model	Expansion board	Expansion adapter	Communication type	Cable model Connection diagram number				
FX5UC	-	-	RS-422	User preparing RS422 connection diagram 5)	GT11H-C30-37P (3m) GT11H-C60-37P (6m) GT11H-C100-37P (10m)	GT14 Handy	13m	1 GOT for 1 PLC built-in port
	-	FX5-485ADP	RS-422	User preparing RS422 connection diagram 5)		GT14 Handy	13m	1 GOT for 1 Expansion adapter

*1 When the expansion board (communication board) and the expansion adapter are connected, a GOT and a peripheral such as a PC with GX Works3 installed can be connected to them individually.

(4) When connecting to FX5UC (RS-232 connection)

PLC				Connection cable	External cable	GOT model	Total distance	Number of connectable equipment*1
Model	Expansion board	Expansion adapter	Communication type	Cable model Connection diagram number				
FX5UC	-	FX5-232ADP	RS-232	User preparing RS232 connection diagram 2)	GT11H-C30-37P (3m)	GT14 Handy	6m	1 GOT for 1 Expansion board

*1 When the expansion board (communication board) and the expansion adapter are connected, a GOT and a peripheral such as a PC with GX Works3 installed can be connected to them individually.

■ When using the external cable (GT11H-C□□□)

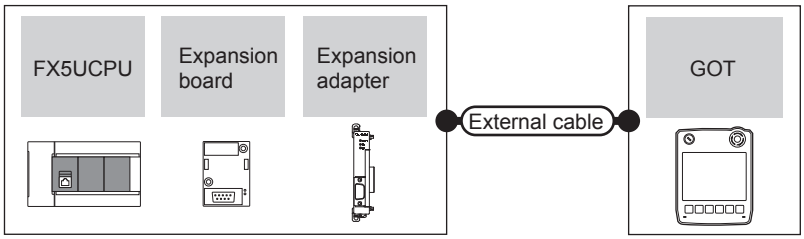

(1) When connecting to MELSEC iQ-F Series (RS-422 connection)

PLC				External cable	GOT model	Total distance	Number of connectable equipment*1
Model	Expansion board	Expansion adapter	Communication type				
FX5U	-	-	RS-422	GT11H-C30 (3m) GT11H-C60 (6m) GT11H-C100 (10m) User preparing RS422 connection diagram 6)	GT14 Handy	13.5m	1 GOT for 1 PLC built-in port
	FX5-485-BD	-	RS-422		GT14 Handy	13.5m	1 GOT for 1 Expansion board
	-	FX5-485-ADP	RS-422		GT14 Handy	13.5m	1 GOT for 1 Expansion adapter

*1 When the expansion board (communication board) and the expansion adapter are connected, a GOT and a peripheral such as a PC with GX Works3 installed can be connected to them individually.

(2) When connecting to MELSEC iQ-F Series (RS-232 connection)

PLC				External cable	GOT model	Total distance	Number of connectable equipment*1
Model	Expansion board	Expansion adapter	Communication type				
FX5U	FX5U-232-BD	-	RS-232	GT11H-C30 (3m) GT11H-C60 (6m) User preparing RS232 connection diagram 3)	GT14 Handy	6m	1 GOT for 1 Expansion board
	-	FX5U-232-ADP	RS-232	GT11H-C30 (3m) GT11H-C60 (6m) User preparing RS232 connection diagram 3)	GT14 Handy	6m	1 GOT for 1 Expansion adapter

*1 When the expansion board (communication board) and the expansion adapter are connected, a GOT and a peripheral such as a PC with GX Works3 installed can be connected to them individually.

(3) When connecting to FX5UC (RS-422 connection)

PLC				External cable	GOT model	Total distance	Number of connectable equipment*1
Model	Expansion board	Expansion adapter	Communication type				
FX5UC	-	-	RS-422	GT11H-C30 (3m) GT11H-C60 (6m) GT11H-C100 (10m) User preparing RS422 connection diagram 6)	GT14 Handy	13.5m	1 GOT for 1 PLC built-in port
	-	FX5-485-ADP	RS-422		GT14 Handy	13.5m	1 GOT for 1 Expansion adapter

*1 When the expansion board (communication board) and the expansion adapter are connected, a GOT and a peripheral such as a PC with GX Works3 installed can be connected to them individually.

(4) When connecting to FX5UC (RS-232 connection)

PLC				External cable	GOT model	Total distance	Number of connectable equipment*1
Model	Expansion board	Expansion adapter	Communication type				
FX5UC	-	FX5U-232-ADP	RS-232	GT11H-C30 (3m) GT11H-C60 (6m) User preparing RS232 connection diagram 3)	GT14 Handy	6m	1 GOT for 1 Expansion adapter

*1 When the expansion board (communication board) and the expansion adapter are connected, a GOT and a peripheral such as a PC with GX Works3 installed can be connected to them individually.

21.2.6 Connecting to FXCPU

Communication driver
MELSEC-FX

■ When using the connector conversion box

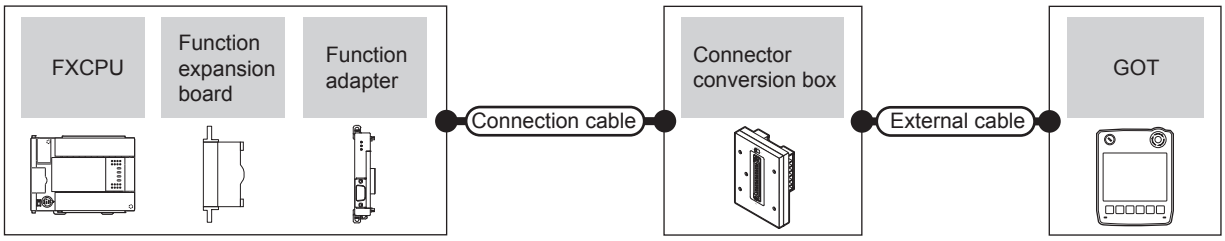

(1) When connecting to FX0, FX0S, FX0N, FX1, FX2 or FX2C

PLC				Connection cable	Connector conversion box	External cable	GOT model	Total distance	Number of connectable equipment
Model	Function expansion board*1	Function adapter*1	Communication type	Cable model					
FX0 FX0S FX0N	-	-	RS-422	GT01-C10R4-8P(1m) GT01-C30R4-8P(3m) GT01-C100R4-8P(10m)	GT11H-CNB-37S	GT11H-C30-37P (3m) GT11H-C60-37P (6m) GT11H-C100-37P (10m)	GT14 Handy	13m	1 GOT for 1 PLC
FX1 FX2 FX2C	-	-	RS-422	GT01-C30R4-25P(3m) GT01-C100R4-25P(10m)			GT14 Handy	13m	

*1 When using function expansion boards or function adapters, confirm the communication settings.

21.6 Precautions ■ Connection to FXCPU(2)When connecting with function extension board or communication special adapter

(2) When connecting to FX1S, FX1N, FX2N, FX1NC, FX2NC (RS-422 connection)

PLC				Connection cable	Connector conversion box	External cable	GOT model	Total distance	Number of connectable equipment
Model	Function expansion board*1*2	Function adapter*2	Communication type	Cable model					
FX1S FX1N FX2N FX1NC FX2NC	-	-	RS-422	GT01-C10R4-8P(1m) GT01-C30R4-8P(3m) GT01-C100R4-8P(10m)	GT11H-CNB-37S	GT11H-C30-37P (3m) GT11H-C60-37P (6m) GT11H-C100-37P (10m)	GT14 Handy	13m	1 GOT for 1 PLC built-in port
FX1S FX1N FX2N	FX1N-422-BD FX2N-422-BD	-	RS-422	GT01-C10R4-8P(1m) GT01-C30R4-8P(3m) GT01-C100R4-8P(10m)			GT14 Handy	13m	1 GOT for 1 function expansion board

*1 The function expansion board to be used differs depending on the FXCPU type to be connected.
Use the applicable function expansion board shown in the following table.

Item	Function expansion board to be used	
	When connecting to FX1N or FX1S Series	When connecting to FX2N series
For RS-422 communication	FX1N-422-BD	FX2N-422-BD

*2 When using function expansion boards or function adapters, confirm the communication settings.

21.6 Precautions ■ Connection to FXCPU(2)When connecting with function extension board or communication special adapter

(3) When connecting to FX1S, FX1N, FX2N, FX1NC, FX2NC (RS-232 connection)

PLC				Connection cable	Connector conversion box	External cable	GOT model	Total distance	Number of connectable equipment
Model	Function expansion board*1*2	Function adapter*2	Communication type	Cable model Connection diagram number					
FX1S FX1N FX2N	FX1N-232-BD FX2N-232-BD	-	RS-232	GT01-C30R2-9S(3m) or User preparing RS232 connection diagram 1)	GT11H-CNB-37S	GT11H-C30-37P (3m)	GT14 Handy	6m	1 GOT for 1 function expansion board
	FX1N-CNV-BD FX2N-CNV-BD	FX2NC-232ADP	RS-232	GT01-C30R2-9S(3m) or User preparing RS232 connection diagram 1)			GT14 Handy	6m	1 GOT for 1 function adapter
		FX0N-232ADP	RS-232	GT01-C30R2-25P(3m) or User preparing RS232 connection diagram 4)			GT14 Handy	6m	
FX1NC FX2NC	-	FX2NC-232ADP	RS-232	GT01-C30R2-9S(3m) or User preparing RS232 connection diagram 1)			GT14 Handy	6m	
		FX0N-232ADP	RS-232	GT01-C30R2-25P(3m) or User preparing RS232 connection diagram 4)			GT14 Handy	6m	

*1 The function expansion board to be used differs according to the type of the FXCPU. Select the function expansion board from the following table.

Item	Function expansion board to be used	
	When connecting to FX1N or FX1S Series	When connecting to FX2N series
For RS-232 communication	FX1N-232-BD	FX2N-232-BD
When the function adapter is used	FX1N-CNV-BD	FX2N-CNV-BD

*2 When using function expansion boards or function adapters, confirm the communication settings.

21.6 Precautions ■ Connection to FXCPU(2)When connecting with function extension board or communication special adapter

(4) When connecting to FX3G, FX3S (RS-422 connection)

PLC				Connection cable	Connector conversion box	External cable	GOT model	Total distance	Number of connectable equipment*1
Model	Function expansion board*2	Function adapter*2	Communication type	Cable model					
FX3G FX3S	-	-	RS-422	GT01-C10R4-8P(1m) GT01-C30R4-8P(3m) GT01-C100R4-8P(10m)	GT11H-CNB-37S	GT11H-C30-37P(3m) GT11H-C60-37P(6m) GT11H-C100-37P(10m)	GT14 Handy	13m	1 GOT for 1 PLC built-in port
	FX3G-422-BD	-	RS-422	GT01-C10R4-8P(1m) GT01-C30R4-8P(3m) GT01-C100R4-8P(10m)			GT14 Handy	13m	1 GOT for 1 function expansion board

*1 When the function expansion board (communication board) and the function adapter are connected, a GOT and a peripheral such as a PC with GX Developer installed can be connected to them individually.

*2 When using function expansion boards or function adapters, confirm the communication settings.

21.6 Precautions ■ Connection to FXCPU(2)When connecting with function extension board or communication special adapter

(5) When connecting to FX3G (RS-232 connection)

PLC				Connection cable	Connector conversion box	External cable	GOT model	Total distance	Number of connectable equipment*1
Model	Function expansion board*2	Function adapter*2	Communication type	Cable model Connection diagram number					
FX3G FX3S	FX3G-232-BD	-	RS-232	GT01-C30R2-9S(3m) or User preparing RS232 connection diagram 1)	GT11H-CNB-37S	GT11H-C30-37P (3m)	GT14 Handy	6m	1 GOT for 1 function expansion board
FX3G	-	FX3G-CNV-ADP + FX3U-232ADP FX3U-232ADP-MB	RS-232	GT01-C30R2-9S(3m) or User preparing RS232 connection diagram 1)			GT14 Handy	6m	1 GOT for 1 function adapter
FX3S	-	FX3S-CNV-ADP + FX3U-232ADP FX3U-232ADP-MB	RS-232	GT01-C30R2-9S(3m) or User preparing RS232 connection diagram 1)			GT14 Handy	6m	1 GOT for 1 function adapter

*1 When the function expansion board (communication board) and the function adapter are connected, a GOT and a peripheral such as a PC with GX Developer installed can be connected to them individually.

*2 When using function expansion boards or function adapters, confirm the communication settings.

21.6 Precautions ■ Connection to FXCPU(2)When connecting with function extension board or communication special adapter

(6) When connecting to FX3GC (FX3GC-□□/D, FX3GC-□□/DSS) (RS-422 connection)

PLC		Connection cable	Connector conversion box	External cable	GOT model	Total distance	Number of connectable equipment
Model	Communication type	Cable model					
FX3GC-□□/D FX3GC-□□/DSS	RS-422	GT01-C10R4-8P(1m) GT01-C30R4-8P(3m) GT01-C100R4-8P(10m)	GT11H-CNB-37S	GT11H-C30-37P (3m) GT11H-C60-37P (6m) GT11H-C100-37P (10m)	GT14 Handy	13m	1 GOT for 1 PLC built-in port

(7) When connecting to FX3GC (FX3GC-□□/D, FX3GC-□□/DSS) (RS-232 connection)

PLC			Connection cable	Connector conversion box	External cable	GOT model	Total distance	Number of connectable equipment*1
Model	Function adapter	Communication type	Cable model Connection diagram number					
FX3GC-□□/D FX3GC-□□/DSS	FX3U-232ADP FX3U-232ADP-MB	RS-232	GT01-C30R2-9S(3m) or User preparing RS232 connection diagram 1)	GT11H-CNB-37S	GT11H-C30-37P (3m)	GT14 Handy	6m	1 GOT for 1 function adapter

*1 A GOT and a peripheral such as a PC with GX Developer installed can be connected to the function adapter and the FXCPU individually.

(8) When connecting to FX3U, FX3UC (FX3UC-□□-LT (-2)) (RS-422 connection)

PLC				Connection cable	Connector conversion box	External cable	GOT model	Total distance	Number of connectable equipment*1
Model	Function expansion board*2	Function adapter*2	Communication type	Cable model					
FX3U FX3UC (FX3UC-□□-LT (-2))	-	-	RS-422	GT01-C10R4-8P(1m) GT01-C30R4-8P(3m) GT01-C100R4-8P(10m)	GT11H-CNB-37S	GT11H-C30-37P(3m) GT11H-C60-37P(6m) GT11H-C100-37P(10m)	GT14 Handy	13m	1 GOT for 1 PLC built-in port
	FX3U-422-BD	-	RS-422	GT01-C10R4-8P(1m) GT01-C30R4-8P(3m) GT01-C100R4-8P(10m)			GT14 Handy	13m	1 GOT for 1 function expansion board

*1 When the function expansion board (communication board) and the function adapter are connected, a GOT and a peripheral such as a PC with GX Developer installed can be connected to them individually.

*2 When using function expansion boards or function adapters, confirm the communication settings.

21.6 Precautions ■ (2)When connecting with function extension board or communication special adapterConnection to FXCPU

(9) When connecting to FX3U, FX3UC (FX3UC-□□-LT (-2)) (RS-232 connection)

PLC				Connection cable	Connector conversion box	External cable	GOT model	Total distance	Number of connectable equipment*1
Model	Function expansion board*2	Function adapter*2	Communication type	Cable model Connection diagram number					
FX3U FX3UC (FX3UC-□□-LT (-2))	FX3U-232-BD	-	RS-232	GT01-C30R2-9S(3m) or User preparing RS232 connection diagram 1)	GT11H-CNB-37S	GT11H-C30-37P (3m)	GT14 Handy	6m	1 GOT for 1 function expansion board
	FX3U-422-BD FX3U-232-BD FX3U-CNV-BD	FX3U-232ADP FX3U-232ADP-MB	RS-232	GT01-C30R2-9S(3m) or User preparing RS232 connection diagram 1)			GT14 Handy	6m	1 GOT for 1 function adapter

*1 When the function expansion board (communication board) and the function adapter are connected, a GOT and a peripheral such as a PC with GX Developer installed can be connected to them individually.

*2 When using function expansion boards or function adapters, confirm the communication settings.

21.6 Precautions ■ Connection to FXCPU(2)When connecting with function extension board or communication special adapter

(10) When connecting to FX3UC (FX3UC-□□/D, FX3UC-□□/DS, FX3UC-□□/DSS) (RS-422 connection)

PLC		Connection cable	Connector conversion box	External cable	GOT model	Total distance	Number of connectable equipment
Model	Communication type	Cable model					
FX3UC-□□/D FX3UC-□□/DS FX3UC-□□/DSS	RS-422	GT01-C10R4-8P(1m) GT01-C30R4-8P(3m) GT01-C100R4-8P(10m)	GT11H-CNB-37S	GT11H-C30-37P (3m) GT11H-C60-37P (6m) GT11H-C100-37P (10m)	GT14 Handy	13m	1 GOT for 1 PLC built-in port

(11) When connecting to FX3UC (FX3UC-□□/D, FX3UC-□□/DS, FX3UC-□□/DSS) (RS-232 connection)

PLC			Connection cable	Connector conversion box	External cable	GOT model	Total distance	Number of connectable equipment*1
Model	Function adapter	Communication type	Cable model Connection diagram number					
FX3UC-□□/D FX3UC-□□/DS FX3UC-□□/DSS	FX3U-232ADP FX3U-232ADP-MB	RS-232	GT01-C30R2-9S(3m) or User preparing RS232 connection diagram 1)	GT11H-CNB-37S	GT11H-C30-37P(3m)	GT14 Handy	6m	1 GOT for 1 function adapter

*1 A GOT and a peripheral such as a PC with GX Developer installed can be connected to the function adapter and the FXCPU individually.

■ When using the external cable (GT11H-C□□□-37P)

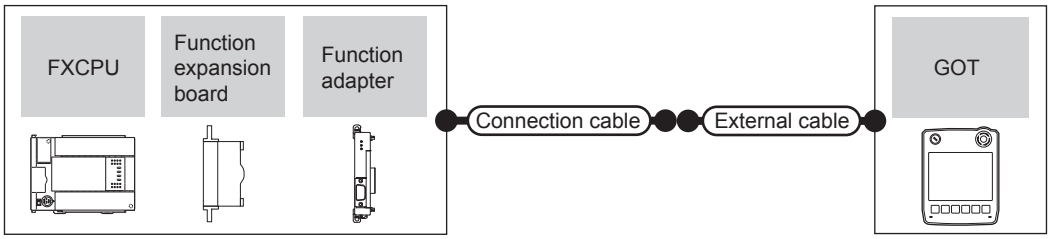

(1) When connecting to FX0, FX0S, FX0N, FX1, FX2 or FX2C

PLC				Connection cable	External cable	GOT model	Total distance	Number of connectable equipment
Model	Function expansion board*1	Function adapter*1	Communication type	Cable model				
FX0 FX0S FX0N	-	-	RS-422	GT11H-C15R4-8P	GT11H-C30-37P (3m) GT11H-C60-37P (6m) GT11H-C100-37P (10m)	GT14 Handy	13m	1 GOT for 1 PLC
FX1 FX2 FX2C	-	-	RS-422	GT11H-C15R4-25P	GT11H-C30-37P (3m) GT11H-C60-37P (6m) GT11H-C100-37P (10m)	GT14 Handy	13m	

*1 When using function expansion boards or function adapters, confirm the communication settings.

21.6 Precautions ■ Connection to FXCPU(2)When connecting with function extension board or communication special adapter

(2) When connecting to FX1S, FX1N, FX2N, FX1NC, FX2NC (RS-422 connection)

PLC				Connection cable	External cable	GOT model	Total distance	Number of connectable equipment
Model	Function expansion board*1*2	Function adapter*2	Communication type	Cable model				
FX1S FX1N FX2N FX1NC FX2NC	-	-	RS-422	GT11H-C15R4-8P	GT11H-C30-37P (3m) GT11H-C60-37P (6m) GT11H-C100-37P (10m)	GT14 Handy	13m	1 GOT for 1 PLC built-in port
FX1S FX1N FX2N	FX1N-422-BD FX2N-422-BD	-	RS-422	GT11H-C15R4-8P	GT11H-C30-37P (3m) GT11H-C60-37P (6m) GT11H-C100-37P (10m)	GT14 Handy	13m	1 GOT for 1 function expansion board

*1 The function expansion board to be used differs according to the type of the FXCPU to be connected.
Use the applicable function expansion board shown in the following table.

Item	Function expansion board to be used	
	When connecting to FX1N or FX1S Series	When connecting to FX2N series
For RS-422 communication	FX1N-422-BD	FX2N-422-BD

*2 When using function expansion boards or function adapters, confirm the communication settings.

21.6 Precautions ■ Connection to FXCPU(2)When connecting with function extension board or communication special adapter

(3) When connecting to FX1S, FX1N, FX2N, FX1NC, FX2NC (RS-232 connection)

PLC				Connection cable	External cable	GOT model	Total distance	Number of connectable equipment
Model	Function expansion board*1*2	Function adapter*2	Communication Type	Cable model Connection diagram number				
FX1S FX1N FX2N	FX1N-232-BD FX2N-232-BD	-	RS-232	User preparing RS232 connection diagram 2)	GT11H-C30-37P (3m)	GT14 Handy	6m	1 GOT for 1 function expansion board
	FX1N-CNV-BD FX2N-CNV-BD	FX2NC-232ADP	RS-232	User preparing RS232 connection diagram 2)	GT11H-C30-37P (3m)	GT14 Handy	6m	1 GOT for 1 function adapter
		FX0N-232ADP	RS-232	User preparing RS232 connection diagram 5)	GT11H-C30-37P (3m)	GT14 Handy	6m	
FX1NC FX2NC	-	FX2NC-232ADP	RS-232	User preparing RS232 connection diagram 2)	GT11H-C30-37P (3m)	GT14 Handy	6m	
		FX0N-232ADP	RS-232	User preparing RS232 connection diagram 5)	GT11H-C30-37P (3m)	GT14 Handy	6m	

*1 The function expansion board to be used differs according to the type of the FXCPU. Select the function expansion board from the following table.

Item	Function expansion board to be used	
	When connecting to FX1N or FX1S Series	When connecting to FX2N series
For RS-232 communication	FX1N-232-BD	FX2N-232-BD
When the function adapter is used	FX1N-CNV-BD	FX2N-CNV-BD

*2 When using function expansion boards or function adapters, confirm the communication settings.

21.6 Precautions ■ Connection to FXCPU(2)When connecting with function extension board or communication special adapter

(4) When connecting to FX3G, FX3S, FX3GE (RS-422 connection)

PLC				Connection cable	External cable	GOT model	Total distance	Number of connectable equipment*1
Model	Function expansion board*2	Function adapter*2	Communication type	Cable model				
FX3G FX3S FX3GE	-	-	RS-422	GT11H-C15R4-8P	GT11H-C30-37P (3m) GT11H-C60-37P (6m) GT11H-C100-37P (10m)	GT14 Handy	13m	1 GOT for 1 PLC built-in port
	FX3G-422-BD	-	RS-422	GT11H-C15R4-8P	GT11H-C30-37P (3m) GT11H-C60-37P (6m) GT11H-C100-37P (10m)	GT14 Handy	13m	1 GOT for 1 function expansion board

*1 When the function expansion board (communication board) and the function adapter are connected, a GOT and a peripheral such as a PC with GX Developer installed can be connected to them individually.

*2 When using function expansion boards or function adapters, confirm the communication settings.

21.6 Precautions ■ Connection to FXCPU(2)When connecting with function extension board or communication special adapter

(5) When connecting to FX3G, FX3S, FX3GE (RS-232 connection)

PLC				Connection cable	External cable	GOT model	Total distance	Number of connectable equipment*1
Model	Function expansion board*2	Function adapter*2	Communication type	Cable model Connection diagram number				
FX3G FX3S FX3GE	FX3G-232-BD	-	RS-232	User preparing RS232 connection diagram 2)	GT11H-C30-37P (3m)	GT14 Handy	6m	1 GOT for 1 function expansion board
FX3G	-	FX3G-CNV-ADP + FX3U-232ADP FX3U-232ADP-MB	RS-232	User preparing RS232 connection diagram 2)	GT11H-C30-37P (3m)	GT14 Handy	6m	1 GOT for 1 function adapter
FX3GE	-	FX3U-232ADP FX3U-232ADP-MB	RS-232	User preparing RS232 connection diagram 2)	GT11H-C30-37P (3m)	GT14 Handy	6m	1 GOT for 1 function adapter
FX3S	-	FX3S-CNV-ADP + FX3U-232ADP FX3U-232ADP-MB	RS-232	User preparing RS232 connection diagram 2)	GT11H-C30-37P (3m)	GT14 Handy	6m	1 GOT for 1 function adapter

*1 When the function expansion board (communication board) and the function adapter are connected, a GOT and a peripheral such as a PC with GX Developer installed can be connected to them individually.

*2 When using function expansion boards or function adapters, confirm the communication settings.

21.6 Precautions ■ Connection to FXCPU(2)When connecting with function extension board or communication special adapter

(6) When connecting to FX3GC (FX3GC-□□/D, FX3GC-□□/DSS) (RS-422 connection)

PLC		Connection cable	External cable	GOT model	Total distance	Number of connectable equipment
Model	Communication type	Cable model				
FX3GC-□□/D FX3GC-□□/DSS	RS-422	GT11H-C15R4-8P	GT11H-C30-37P (3m) GT11H-C60-37P (6m) GT11H-C100-37P (10m)	GT14 Handy	13m	1 GOT for 1 PLC built-in port

(7) When connecting to FX3GC (FX3GC-□□/D, FX3GC-□□/DSS) (RS-232 connection)

PLC			Connection cable	External cable	GOT model	Total distance	Number of connectable equipment*1
Model	Function adapter	Communication type	Cable model Connection diagram number				
FX3GC-□□/D FX3GC-□□/DSS	FX3U-232ADP FX3U-232ADP-MB	RS-232	User preparing RS232 connection diagram 2)	GT11H-C30-37P(3m)	GT14 Handy	6m	1 GOT for 1 function adapter

*1 A GOT and a peripheral such as a PC with GX Developer installed can be connected to the function adapter and the FXCPU individually.

(8) When connecting to FX3U, FX3UC (FX3UC-□□-LT (-2)) (RS-422 connection)

PLC				Connection cable	External cable	GOT model	Total distance	Number of connectable equipment*1
Model	Function expansion board*2	Function adapter*2	Communication type	Cable model				
FX3U FX3UC (FX3UC-□□-LT (-2))	-	-	RS-422	GT11H-C15R4-8P	GT11H-C30-37P (3m) GT11H-C60-37P (6m) GT11H-C100-37P (10m)	GT14 Handy	13m	1 GOT for 1 PLC built-in port
	FX3U-422-BD	-	RS-422	GT11H-C15R4-8P	GT11H-C30-37P (3m) GT11H-C60-37P (6m) GT11H-C100-37P (10m)	GT14 Handy	13m	1 GOT for 1 function expansion board

*1 When the function expansion board (communication board) and the function adapter are connected, a GOT and a peripheral such as a PC with GX Developer installed can be connected to them individually.

*2 When using function expansion boards or function adapters, confirm the communication settings.

21.6 Precautions ■ Connection to FXCPU(2)When connecting with function extension board or communication special adapter

(9) When connecting to FX3U, FX3UC (FX3UC-□□-LT (-2)) (RS-232 connection)

PLC				Connection cable	External cable	GOT model	Total distance	Number of connectable equipment*1
Model	Function expansion board*2	Function adapter*2	Communication type	Cable model Connection diagram number				
FX3U FX3UC (FX3UC-□□-LT (-2))	FX3U-232-BD	-	RS-232	User preparing RS232 connection diagram 2)	GT11H-C30-37P (3m)	GT14 Handy	6m	1 GOT for 1 function expansion board
	FX3U-422-BD FX3U-232-BD FX3U-CNV-BD	FX3U-232ADP FX3U-232ADP-MB	RS-232	User preparing RS232 connection diagram 2)	GT11H-C30-37P (3m)	GT14 Handy	6m	1 GOT for 1 function adapter

*1 When the function expansion board (communication board) and the function adapter are connected, a GOT and a peripheral such as a PC with GX Developer installed can be connected to them individually.

*2 When using function expansion boards or function adapters, confirm the communication settings.

21.6 Precautions ■ Connection to FXCPU(2)When connecting with function extension board or communication special adapter

(10) When connecting to FX3UC (FX3UC-□□/D, FX3UC-□□/DS, FX3UC-□□/DSS) (RS-422 connection)

PLC		Connection cable	External cable	GOT model	Total distance	Number of connectable equipment
Model	Communication type	Cable model				
FX3UC-□□/D FX3UC-□□/DS FX3UC-□□/DSS	RS-422	GT11H-C15R4-8P	GT11H-C30-37P (3m) GT11H-C60-37P (6m) GT11H-C100-37P (10m)	GT14 Handy	13m	1 GOT for 1 PLC built-in port

(11) When connecting to FX3UC (FX3UC-□□/D, FX3UC-□□/DS, FX3UC-□□/DSS) (RS-232 connection)

PLC			Connection cable	External cable	GOT model	Total distance	Number of connectable equipment*1
Model	Function adapter	Communication type	Cable model Connection diagram number				
FX3UC-□□/D FX3UC-□□/DS FX3UC-□□/DSS	FX3U-232ADP FX3U-232ADP-MB	RS-232	User preparing RS232 connection diagram 2)	GT11H-C30-37P (3m)	GT14 Handy	6m	1 GOT for 1 function adapter

*1 A GOT and a peripheral such as a PC with GX Developer installed can be connected to the function adapter and the FXCPU individually.

■ When using the external cable (GT11H-C□□□)

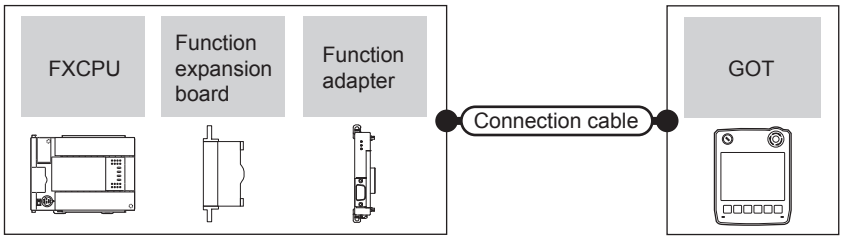

(1) When connecting to FX1S, FX1N, FX2N, FX1NC, FX2NC (RS-232 connection)

PLC				External cable	GOT model	Total distance	Number of connectable equipment
Model	Function expansion board*1*2	Function adapter*2	Communication type				
FX1S FX1N FX2N	FX1N-232-BD FX2N-232-BD	-	RS-232	GT11H-C30 (3m) GT11H-C60 (6m) User preparing RS232 connection diagram 3)	GT14 Handy	6m	1 GOT for 1 function expansion board
	FX1N-CNV-BD FX2N-CNV-BD	FX2NC-232ADP	RS-232	GT11H-C30 (3m) GT11H-C60 (6m) User preparing RS232 connection diagram 3)	GT14 Handy	6m	1 GOT for 1 function adapter
		FX0N-232ADP	RS-232	GT11H-C30 (3m) GT11H-C60 (6m) User preparing RS232 connection diagram 6)	GT14 Handy	6m	
FX1NC FX2NC	-	FX2NC-232ADP	RS-232	GT11H-C30 (3m) GT11H-C60 (6m) User preparing RS232 connection diagram 3)	GT14 Handy	6m	
		FX0N-232ADP	RS-232	GT11H-C30 (3m) GT11H-C60 (6m) User preparing RS232 connection diagram 6)	GT14 Handy	6m	

*1 The function expansion board to be used differs according to the type of the FXCPU. Select the function expansion board from the following table.

Item	Function expansion board to be used	
	When connecting to FX1N or FX1S Series	When connecting to FX2N series
For RS-232 communication	FX1N-232-BD	FX2N-232-BD
When the function adapter is used	FX1N-CNV-BD	FX2N-CNV-BD

*2 When using function expansion boards or function adapters, confirm the communication settings.

21.6 Precautions ■ Connection to FXCPU(2)When connecting with function extension board or communication special adapter

(2) When connecting to FX3G, FX3S (RS-232 connection)

PLC				External cable	GOT model	Total distance	Number of connectable equipment*1
Model	Function expansion board*2	Function adapter*2	Communication type				
FX3G FX3S	FX3G-232-BD	-	RS-232	GT11H-C30 (3m) GT11H-C60 (6m) User preparing RS232 connection diagram 3)	GT14 Handy	6m	1 GOT for 1 function expansion board
FX3G	-	FX3G-CNV-ADP + FX3U-232ADP FX3U-232ADP-MB	RS-232	GT11H-C30 (3m) GT11H-C60 (6m) User preparing RS232 connection diagram 3)	GT14 Handy	6m	1 GOT for 1 function adapter
FX3S	-	FX3S-CNV-ADP + FX3U-232ADP FX3U-232ADP-MB	RS-232	GT11H-C30 (3m) GT11H-C60 (6m) User preparing RS232 connection diagram 3)	GT14 Handy	6m	1 GOT for 1 function adapter

*1 When the function expansion board (communication board) and the function adapter are connected, a GOT and a peripheral such as a PC with GX Developer installed can be connected to them individually.

*2 When using function expansion boards or function adapters, confirm the communication settings.

21.6 Precautions ■ Connection to FXCPU(2)When connecting with function extension board or communication special adapter

(3) When connecting to FX3GC (FX3GC-□□/D, FX3GC-□□/DSS) (RS-232 connection)

PLC			External cable	GOT model	Total distance	Number of connectable equipment*1
Model	Function adapter	Communication type				
FX3GC-□□/D FX3GC-□□/DSS	FX3U-232ADP FX3U-232ADP-MB	RS-232	GT11H-C30 (3m) GT11H-C60 (6m) User preparing RS232 connection diagram 3)	GT14 Handy	6m	1 GOT for 1 function adapter

*1 A GOT and a peripheral such as a PC with GX Developer installed can be connected to the function adapter and the FXCPU individually.

(4) When connecting to FX3U, FX3UC (FX3UC-□□-LT (-2)) (RS-232 connection)

PLC				External cable	GOT model	Total distance	Number of connectable equipment*1
Model	Function expansion board*2	Function adapter*2	Communication type				
FX3U FX3UC (FX3UC-□□-LT (-2))	FX3U-232-BD	-	RS-232	GT11H-C30 (3m) GT11H-C60 (6m) User preparing RS232 connection diagram 3)	GT14 Handy	6m	1 GOT for 1 function expansion board
	FX3U-422-BD FX3U-232-BD FX3U-CNV-BD	FX3U-232ADP FX3U-232ADP-MB	RS-232	GT11H-C30 (3m) GT11H-C60 (6m) User preparing RS232 connection diagram 3)	GT14 Handy	6m	1 GOT for 1 function adapter

*1 When the function expansion board (communication board) and the function adapter are connected, a GOT and a peripheral such as a PC with GX Developer installed can be connected to them individually.

*2 When using function expansion boards or function adapters, confirm the communication settings.

21.6 Precautions ■ Connection to FXCPU(2)When connecting with function extension board or communication special adapter

(5) When connecting to FX3UC (FX3UC-□□/D, FX3UC-□□/DS, FX3UC-□□/DSS) (RS-232 connection)

PLC			External cable	GOT model	Total distance	Number of connectable equipment*1
Model	Function adapter	Communication type				
FX3UC-□□/D FX3UC-□□/DS FX3UC-□□/DSS	FX3U-232ADP FX3U-232ADP-MB	RS-232	GT11H-C30 (3m) GT11H-C60 (6m) User preparing RS232 connection diagram 3)	GT14 Handy	6m	1 GOT for 1 function adapter

*1 A GOT and a peripheral such as a PC with GX Developer installed can be connected to the function adapter and the FXCPU individually.

21.2.7 Connecting to WSCPU

Communication driver

MELSEC-WS

(1) When using the connector conversion box

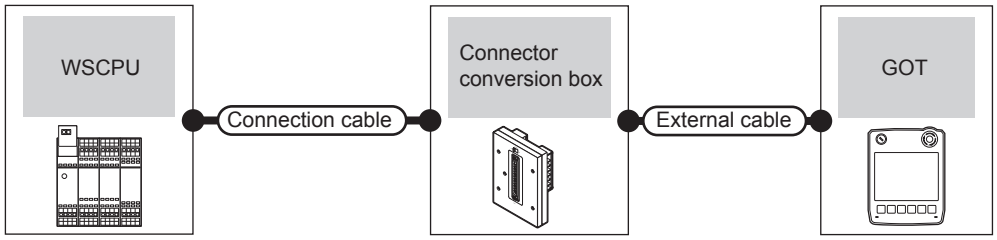

PLC		Connection cable	Connector conversion box	External cable	GOT model	Total distance	Number of connectable equipment
Model	Communication type	Cable model					
MELSEC-WS	RS-232	WS0-C20R2 (2m)	GT11H-CNB-37S	GT11H-C30-37P (3m)	GT14 Handy	5m	1 GOT for 1 PLC

21.2.8 Connecting to the motion controller CPU (Q170MCPU)

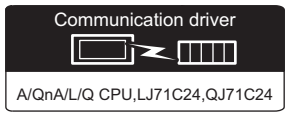

(1) When using the connector conversion box

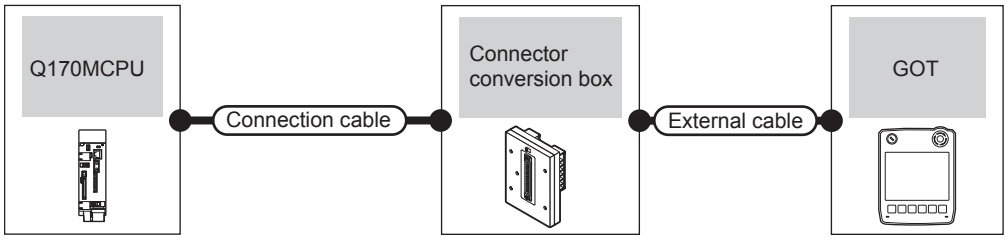

PLC		Connection cable	Connector conversion box	External cable	GOT model	Total distance	Number of connectable equipment
Model	Communication type	Cable model					
Q170MCPU	RS-232	GT11H-C30R2-6P (3m)	GT11H-CNB-37S	GT11H-C30-37P (3m)	GT14 Handy	6m	1 GOT for 1 motion controller CPU

(2) When using the external cable (GT11H-C□□□-37P)

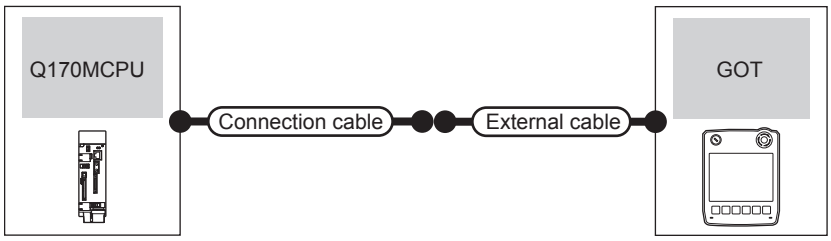

PLC		Connection cable	External cable	GOT model	Total distance	Number of connectable equipment
Model	Communication type	Cable model				
Q170MCPU	RS-232	GT11H-C15R2-6P(1.5m)	GT11H-C30-37P (3m)	GT14 Handy	6m	1 GOT for 1 motion controller CPU

POINT

When connecting to the motion controller CPU (Q Series) other than Q170MCPU

A motion controller CPU (Q Series) mounted to the multiple CPU system of the QCPU (Q mode) can be monitored. The system configuration, connection conditions, and system equipment for connecting a GOT to a motion controller CPU (Q Series) are the same as those for connecting to the QCPU.

☞ 21.2.1 Connecting to QCPU

21.3 Connection Diagram

The following diagram shows the connection between the GOT and the PLC.

21.3.1 RS-232 cable

■ Connection diagram

RS232 connection diagram 1)

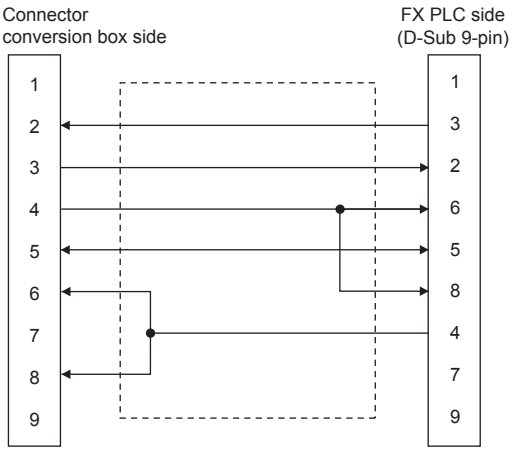

RS232 connection diagram 2)

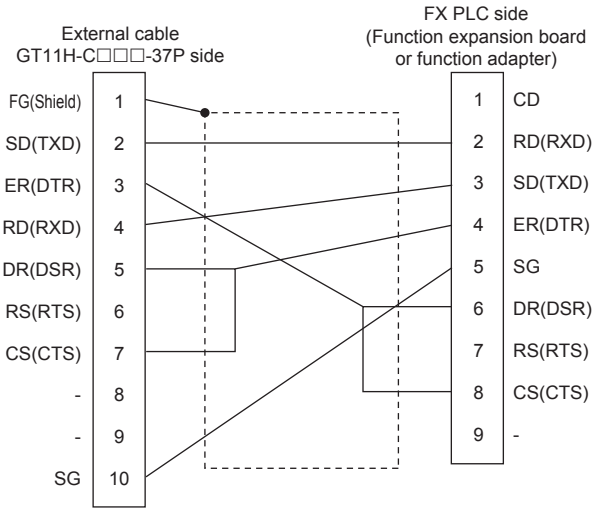

RS232 connection diagram 3)

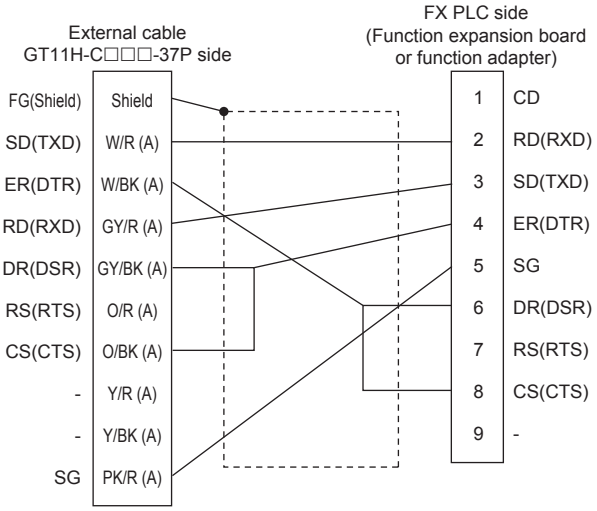

RS232 connection diagram 4)

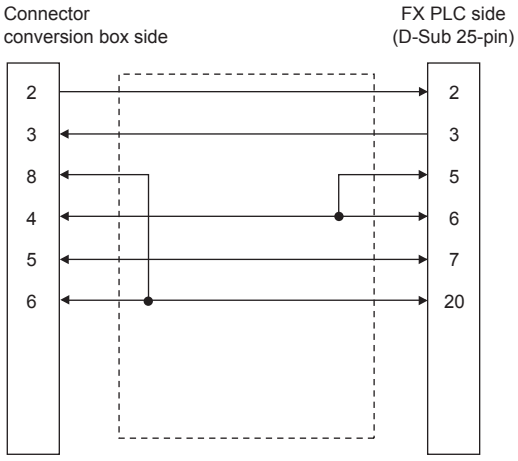

RS232 connection diagram 5)

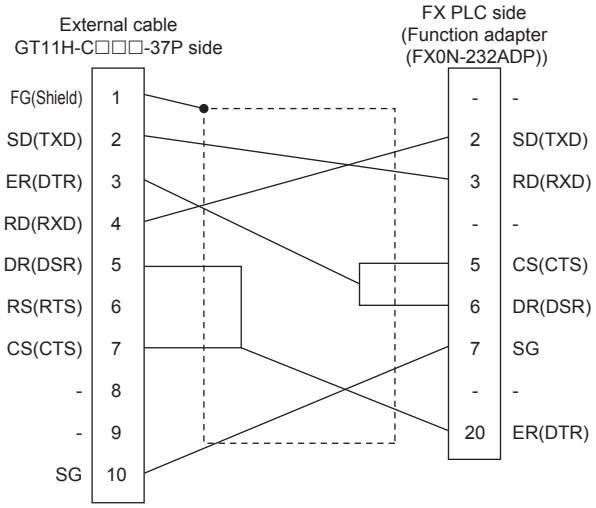

RS232 connection diagram 6)

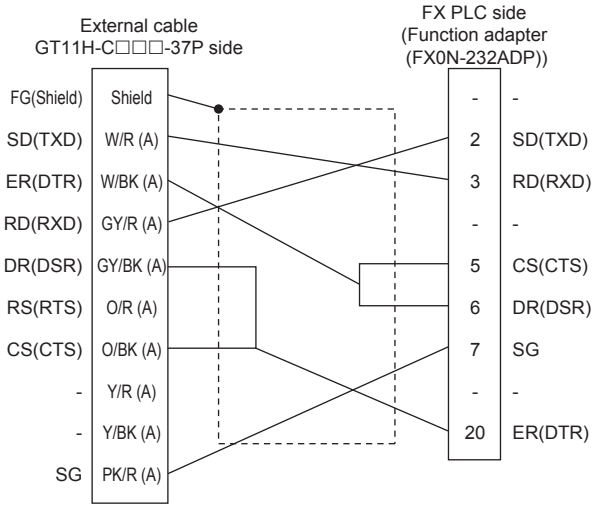

■ Precautions when preparing a cable

(1) Cable length
The total distance (between the GOT and a controller) of RS-232 cable must be 6m or less.

(2) Connector conversion box side connector
For the connector conversion box side connector, refer to the following.

☞ 6.6 Connector Conversion Box

(3) External cable side connector
For the connector specifications of the external cable side, refer to the following.

☞ 8.2 External Cable, Relay Cable

21.3.2 RS-422 cable

■ Connection diagram

RS422 connection diagram 1)

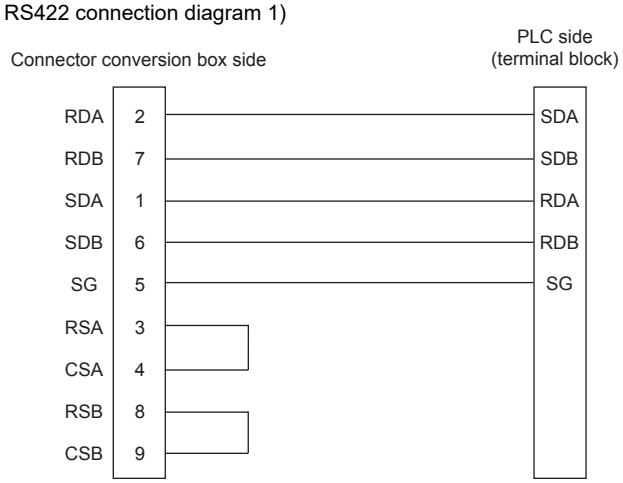

RS422 connection diagram 2)

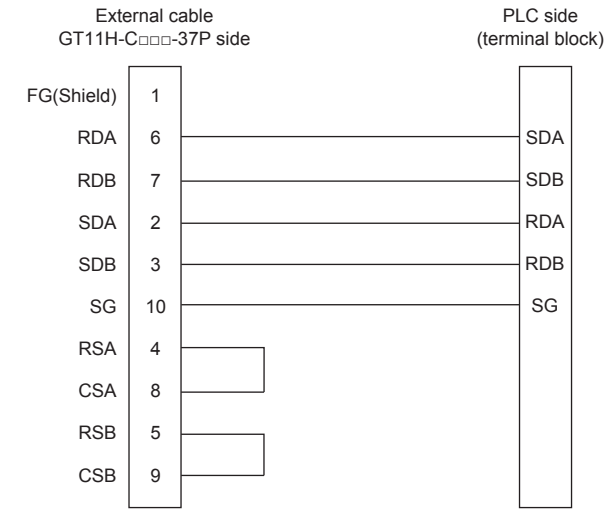

RS422 connection diagram 3)

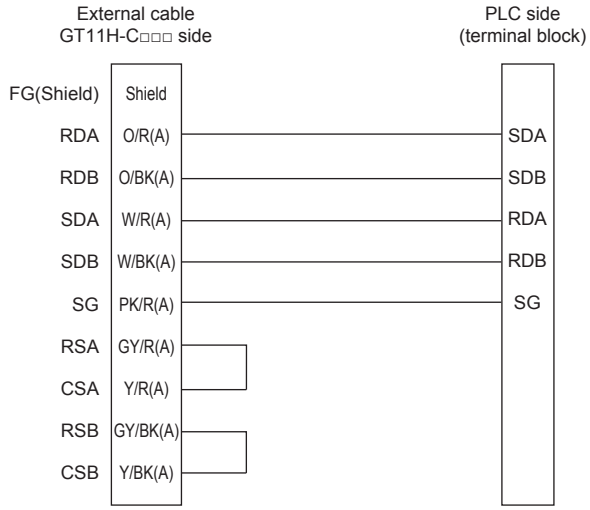

RS422 connection diagram 4)

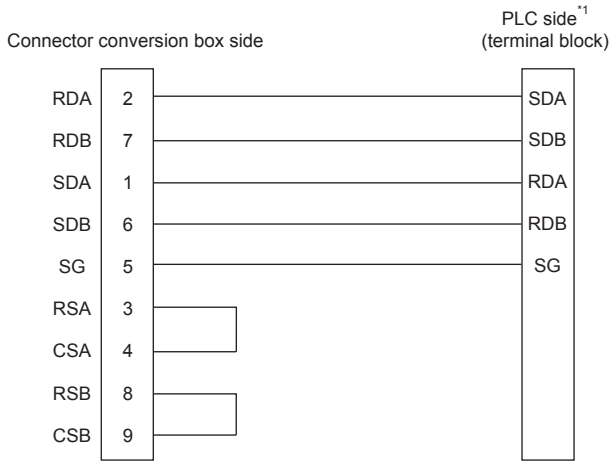

*1 Set the terminating resistor of the PLC side to "330Ω ".

RS422 connection diagram 5)

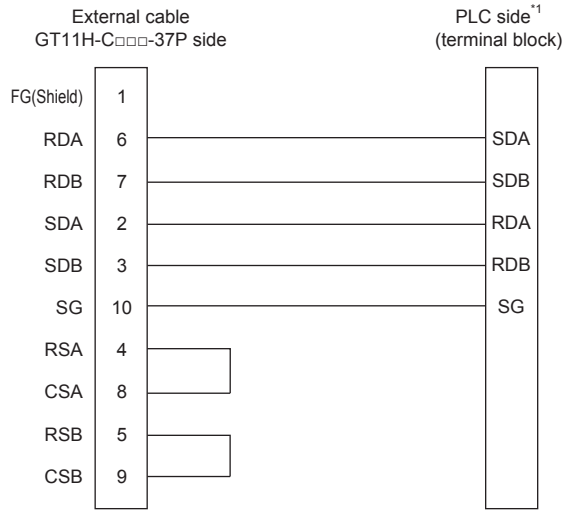

*1 Set the terminating resistor of the PLC side to "330Ω ".

RS422 connection diagram 6)

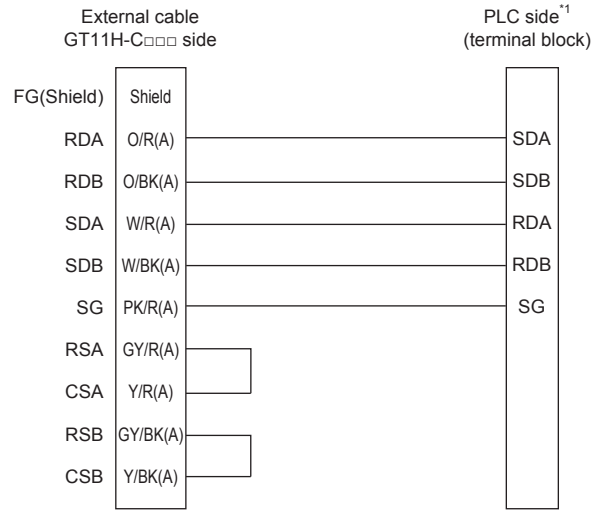

*1 Set the terminating resistor of the PLC side to "330Ω ".

■ Precautions when preparing a cable

(1) Cable length
The total distance (between the GOT and a controller) of RS-232 cable must be total distance or less.

(2) Connector conversion box side connector
For the connector conversion box side connector, refer to the following.

☞ 6.6 Connector Conversion Box

(3) External cable side connector
For the connector specifications of the external cable side, refer to the following.

☞ 8.2 External Cable, Relay Cable

21.4 GOT Side Settings

21.4.1 Setting communication interface (Communication settings)

Set the channel of the connected equipment.

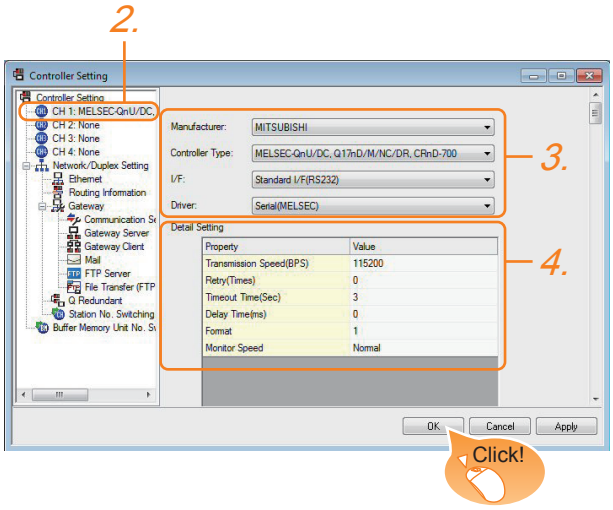

1. Select [Common] → [Controller Setting] from the menu.

2. The Controller Setting window is displayed. Select the channel to be used from the list menu.

3. Set the following items.
   - Manufacturer: Mitsubishi
   - Controller Type: Set according to the Controller Type to be connected.
   - I/F: Interface to be used
   - Driver: Set either of the following option according to the Controller Type to be connected.
     - Serial (MELSEC)
     - MELSEC-FX
     - MELSEC-WS

4. The detailed setting is displayed after Manufacturer, Controller Type, I/F, and Driver are set.
   Make the settings according to the usage environment.
   21.4.2 Communication detail settings

Click the OK button when settings are completed.

POINT

The settings of connecting equipment can be confirmed in [I/F Communication Setting].
For details, refer to the following:
18.1.2 I/F communication setting

21.4.2 Communication detail settings

Make the settings according to the usage environment.

(1) Serial (MELSEC)

Item	Description	Range
Transmission Speed	Set this item when change the transmission speed used for communication with the connected equipment. (Default: 115200bps) When the setting exceeds the limit of the connected equipment, communication is performed at the fastest transmission speed supported by the connected equipment	9600bps, 19200bps, 38400bps, 57600bps, 115200bps
Retry	Set the number of retries to be performed when a communication error occurs. (Default: 0time)	0 to 5times
Timeout Time	Set the time period for a communication to time out. (Default: 3sec)	3 to 30sec
Delay Time	Set this item to adjust the transmission timing of the communication request from the GOT. (Default: 0ms)	0 to 300 (ms)
Format	Select the communication format. (Default: 1)	1*3
Monitor speed	Set the monitor speed of GOT. This setting is not valid in all systems. (Default: Normal)	High*1 Normal Low*2

*1 This is effective when collecting a large data on other than the monitor screen (logging, recipe function, etc.).
However, the range may affect the sequence scan time when connecting to Q00UJ/Q00U/Q01U/Q02UCPU or Q00J/Q00/Q01CPU.
If you want to avoid the influence on the sequence scan time, do not set [High].
(This setting hardly affects QCPUs other than the above.)

*2 Set this range if you want to avoid the influence on the sequence scan time further than the [Normal] setting when connecting to Q00UJ/Q00U/Q01U/Q02UCPU or Q00J/Q00/Q01CPU.
However, the monitor speed may be reduced.

*3 Set the format to "1".

(2) MELSEC-FX

Item	Description	Range
Transmission Speed	Set this item when change the transmission speed used for communication with the connected equipment. (Default: 115200bps) When the setting exceeds the limit of the connected equipment, communication is performed at the fastest transmission speed supported by the connected equipment	9600bps, 19200bps, 38400bps, 57600bps, 115200bps
Retry	Set the number of retries to be performed when a communication error occurs. (Default: 0time)	0 to 5times
Timeout Time	Set the time period for a communication to time out. (Default: 3sec)	3 to 30sec
Delay Time	Set this item to adjust the transmission timing of the communication request from the GOT. (Default: 0ms)	0 to 300 (ms)

(3) MELSEC-WS

Item	Description	Range
Transmission Speed	Set this item when change the transmission speed used for communication with the connected equipment. (Default: 115200bps) When the setting exceeds the limit of the connected equipment, communication is performed at the fastest transmission speed supported by the connected equipment	9600bps, 19200bps, 38400bps, 57600bps, 115200bps
Retry	Set the number of retries to be performed when a communication error occurs. (Default: 3times)	0 to 5times
Timeout Time	Set the time period for a communication to time out. (Default: 3sec)	3 to 30sec
Delay Time	Set this item to adjust the transmission timing of the communication request from the GOT. (Default: 5ms)	0 to 300 (ms)

POINT

(1) Communication interface setting by Utility
The communication interface setting can be changed on the Utility's [Communication setting] after writing [Communication Settings] of project data.
For details on the Utility, refer to the following manual.

☞ 11. COMMUNICATION INTERFACE SETTING (COMMUNICATION SETTING)

(2) Precedence in communication settings
When settings are made by GT Designer3 or the Utility, the latest setting is effective.

HINT

Cutting the portion of multiple connection of the controller

By setting GOT internal device, GOT can cut the portion of multiple connection of the controller. For example, faulty station that has communication timeout can be cut from the system.

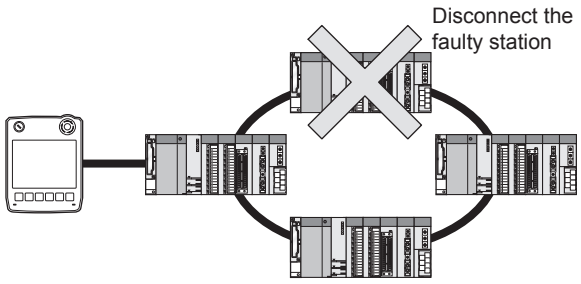

For details of the setting contents of GOT internal device, refer to the following manual.

☞ GT Designer3 Version☐ Screen Design Manual (Fundamentals)

21.5 PLC Side Setting

When a GOT and an LCPU are connected via an L6ADP-R4 adapter, set the following communication setting.

21.5.1 L6ADP-R4 adapter settings

Set the communication settings by the DIP switches of the L6ADP-R4 adapter.

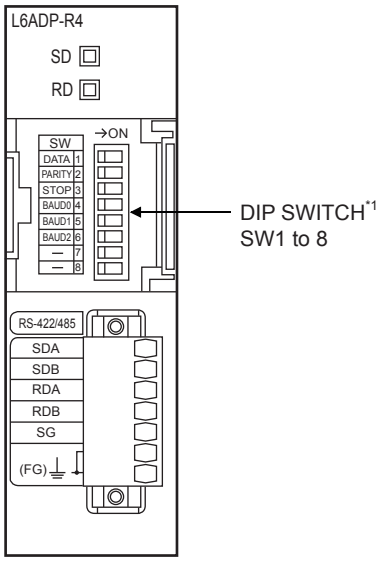

*1 SW7 and SW8 are not used.

(1) DIP switches (SW1 to SW3)
Set the data length, parity bit, and stop bit.

Setting switch	Description	Setting range	
SW1	Data length*1	OFF	7bit
		ON	8bit
SW2	Parity*1	OFF	Disable
		ON	Enable
SW3	Stop bit*1	OFF	1bit
		ON	2bit

*1 Adjust the settings with GOT settings.
21.4.2 Communication detail settings

(2) DIP switches (SW4 to SW6)
Set the transmission speed.

Setting switch	Transmission speed*1				
	9600 bps	19200 bps	38400 bps	57600 bps	115200 bps
SW4	ON	OFF	ON	OFF	ON
SW5	ON	OFF	OFF	ON	ON
SW6	OFF	ON	ON	ON	ON

*1 Adjust the settings with GOT settings.
21.4.2 Communication detail settings

21.5.2 L6ADP-R4 adapter settings

Set the communication speed in GX Works2.

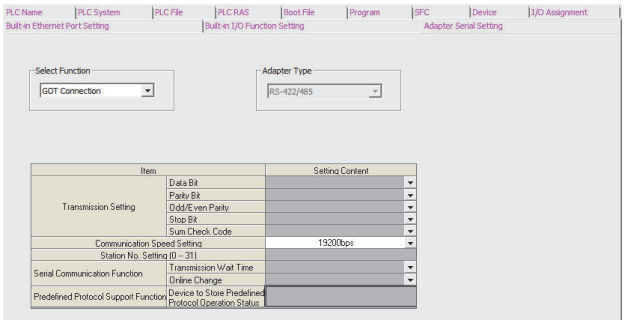

1. Click [PLC parameter] → [Adapter Serial Setting].
2. Set [RS-422/485] in [Adapter Type].
3. Set [GOT Connection] in [Select Function].
4. Adjust [Communication Speed Setting] with the GOT communication setting.
21.4.2 Communication detail settings

POINT

L6ADP-R4 adapter
For details on the L6ADP-R4 adapter, refer to the following manual.
MELSEC-L CPU Module User's Manual (Hardware Design, Maintenance and Inspection)

21.6 Precautions

■ Connection to FXCPU

(1) When connecting to FX3 series
When the keyword of FXCPU (FX3 series) has been set, GOT may not be able to monitoring. Perform an I/O check again.
(☞ 15.2.5 I/O check) When the result of the I/O check is normal, check the status of keyword registration.

(2) When connecting with function extension board or communication special adapter
When a sequence program and settings that the FXCPU communicates with devices other than the GOT are set with software, including GX Developer, the FXCPU cannot communicate with the GOT.

(a) Settings with sequence program
Check the sequence program and delete the following.

☞ FX SERIES PROGRAMMABLE CONTROLLERS USER'S MANUAL - Data Communication Edition

- No protocol communication (RS instruction)
- Sequence program with the computer link, N:N network, and parallel link
- Parameter setting
- Set the following special registers to 0.
  Except FX3U, FX3UC: D8120
  FX3U, FX3UC: D8120, D8400, D8420
  FX3G, FX3GC, FX3GE: D8120, D8400, D8420,D8370
  FX3S: D8120, D8400

(b) Settings with GX Developer
Select [PLC parameter] in [Parameter], and then click the PLC system(2) tab on the FX parameter screen.
Uncheck [Operate communication setting], and then transfer the parameter to the programmable controller. After the transfer, turn off the programmable controller, and then turn on the programmable controller again.

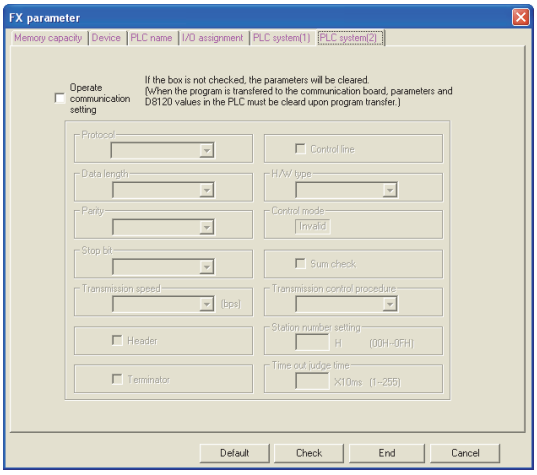

■ Connection in the multiple CPU system

When the GOT is connected to multiple CPU system, the following time is taken until when the PLC runs.

- QCPU (Q mode), motion controller CPU (Q series): 10 seconds or more
- MELDAS C70: 18 seconds or more

When the GOT starts before the PLC runs, a system alarm occurs. Adjust the opening screen time in the GOT setup so that no system alarm occurs.

☞ GT Designer3 Version1 Screen Design Manual

■ Connection to LCPU

LCPU may diagnose (check file system, recovering process, etc.) the SD memory card when turning on the power or when resetting.
Therefore, it takes time until the SD memory card becomes available. When the GOT starts before the SD card becomes available, a system alarm occurs. Adjust the opening screen time in the GOT setup so that no system alarm occurs.

☞ GT Designer3 Version1 Screen Design Manual

■ Connection to basic model QCPU

Do not set the serial communication function of Q00UJ/Q00U/Q01U/Q02UCPU, Q00/Q01CPU. If the function is set, the communication may not be performed.

■ Connection to Q170MCPU

Set [CPU No.] to "2" in the device setting to monitor the device of the Motion CPU area (CPU No.2).

When the CPU No. is set to "0" or "1", the device on the PLC CPU area (CPU No.1) is monitored.

When the CPU No. is set to the number other than "0" to "2", a communication error occurs and the monitoring cannot be executed.

For setting the CPU No., refer to the following manual.

☞ GT Designer3 Version1 Screen Design Manual

Example) Setting dialog box of the bit device

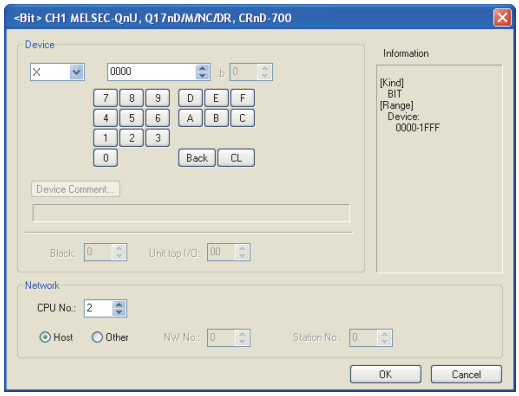

■ Connection to MELSEC iQ-F Series

POINT

MELSEC iQ-F Series communication settings

For details of MELSEC iQ-F Series communication settings, refer to the following manual.

☞ MELSEC iQ-F Series User's Manual

Module parameter settings as a default value (MELSOFT Connection).

If it sets up other than a default value, it becomes impossible to communicate with GOT.

(1) Module parameter setting

(When using FX5-485-BD)

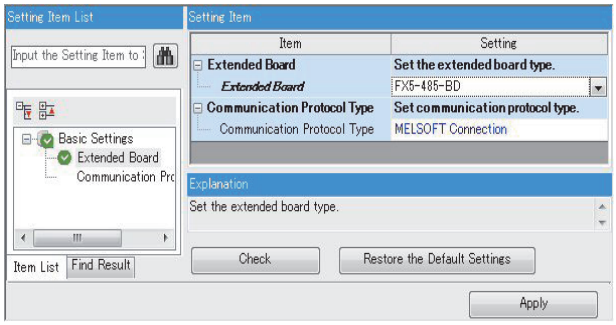

POINT

When changing the module parameter

After writing module parameters to the PLC CPU, turn the PLC CPU OFF then back ON again, or reset the PLC CPU.

22. COMPUTER LINK CONNECTION

22.1 Connectable Model List

The following table shows the connectable models.

22.1.1 PLC/Motion controller CPU

Series	Model	Clock	Communication type	GT14 Handy	Refer to
MELSEC iQ-R Series	R04CPU	○	RS-232 RS-422	○	22.2.1
	R08CPU				
	R16CPU				
	R32CPU				
	R120CPU				
	R08PCPU				
	R16PCPU				
	R32PCPU				
	R120PCPU				
	R04ENCPU				
	R08ENCPU				
	R16ENCPU				
	R32ENCPU				
	R120ENCPU				
	R08SFCPU*2				
	R16SFCPU*2				
	R32SFCPU*2				
	R120SFCPU*2				
Motion controller CPU (MELSEC iQ-R Series)	R16MTCPU	○	RS-232 RS-422	○	22.2.1
	R32MTCPU				
C Controller module*1 (MELSEC iQ-R Series)	R12CCPU-V	○	RS-232 RS-422	○	22.2.1
MELSEC iQ-F Series	FX5U FX5UC	○	RS-232 RS-422	×	-

(Continued to next page)

*1 Use the serial port of a serial communication module controlled by another CPU on the multiple CPU.

*2 Mount a safety function module R6SFM next to the RnSFCPU on the base unit. The RnSFCPU and the safety function module R6SFM must have the same pair version. If their pair versions differ, the RnSFCPU does not operate.

Series	Model	Clock	Communication	GT14 Handy	Refer to
MELSEC-Q (Q mode)	Q00JCPU	○	RS-232 RS-422	○	22.2.2
	Q00CPU*1				
	Q01CPU*1 Q02CPU*1				
	Q02HCPU*1 Q06HCPU*1 Q12HCPU*1 Q25HCPU*1				
	Q02PHCPU Q06PHCPU Q12PHCPU Q25PHCPU	○	RS-232 RS-422	○	22.2.2
	Q12PRHCPU (Main base)	○	-	×	-
	Q25PRHCPU (Main base)				
	Q12PRHCPU (Extension base)	○	RS-232 RS-422	○	22.2.2
	Q25PRHCPU (Extension base)				
	Q00UJCPU Q00UCPU Q01UCPU Q02UCPU Q03UDCPU	○	RS-232 RS-422	○	22.2.2
	Q04UDHCPU Q06UDHCPU Q10UDHCPU Q13UDHCPU Q20UDHCPU Q26UDHCPU				
	Q03UDECPU Q04UDEHCPU Q06UDEHCPU Q10UDEHCPU Q13UDEHCPU Q20UDEHCPU Q26UDEHCPU Q50UDEHCPU Q100UDEHCPU				
	Q03UDVCPU Q04UDVCPU Q06UDVCPU Q13UDVCPU Q26UDVCPU				
C Controller module (Q Series)	Q12DCCPU-V*3*4 Q24DHCCPU-V*4 Q24DHCCPU-LS*4 Q26DHCCPU-LS	○	RS-232 RS-422	○	22.2.2
MELSEC-QS	QS001CPU	×	-	×	-
MELSEC-L	L02CPU L06CPU L26CPU L26CPU-BT L02CPU-P L06CPU-P L26CPU-P L26CPU-PBT L02SCPU L02SCPU-P	○	RS-232 RS-422	○	22.2.3
MELSEC-Q (A mode)	Q02CPU-A Q02HCPU-A Q06HCPU-A	○	RS-232 RS-422	○	22.2.4
MELSEC-QnA (QnACPU)	Q2ACPU*2 Q2ACPU-S1*2 Q3ACPU*2 Q4ACPU*2 Q4ARCPU*2	○	RS-232 RS-422	○	22.2.5
MELSEC-QnA (QnASCPU)	Q2ASCPU*2 Q2ASCPU-S1*2 Q2ASHCPU*2 Q2ASHCPU-S1*2 A2UCPU A2UCPU-S1 A3UCPU A4UCPU A2ACPU A2ACPUP21 A2ACPUR21 A2ACPU-S1 A2ACPUP21-S1	○	RS-232 RS-422	○	22.2.6

(Continued to next page)

*1 For the multiple CPU system configuration, use CPU function version B or later.

*2 If the A series computer link module is applied to the QnACPU, the GOT can monitor the devices in the same range on AnACPU.
However, the following devices cannot be monitored.
- Devices added to QnACPU
- Latch relays (L) and step relays (S)
  (In case of QnACPU, the latch relay (L) and step relay (S) are different from the internal relay (M). However, whichever is specified, an access is made to the internal relay.)
- File register (R)

*3 Use only modules with the upper five digits of the serial No. later than 12042.

*4 Use the serial port of a serial communication module controlled by another CPU on the multiple CPU.

Series	Model	Clock	Communication	GT14 Handy	Refer to
MELSEC-A (AnCPU)	A2ACPUR21-S1	○	RS-232 RS-422	○	22.2.7
	A3ACPU				
	A3ACPUP21				
	A3ACPUR21				
	A1NCPU				
	A1NCPUP21				
	A1NCPUR21				
	A2NCPU				
	A2NCPUP21				
	A2NCPUR21				
	A2NCPU-S1				
	A2NCPUP21-S1				
	A2NCPUR21-S1				
	A3NCPU				
	A3NCPUP21				
	A3NCPUR21				
MELSEC-A (AnSCPU)	A2USCPU	○	RS-232 RS-422	○	22.2.8
	A2USCPU-S1				
	A2USHCPU-S1				
	A1SCPU				
	A1SCPUC24-R2				
	A1SHCPU*1				
	A2SCPU*1				
	A2SHCPU*1				
	A1SJCPU				
	A1SJCPU-S3				
	A1SJHCPU*1				
MELSEC-A	A0J2HCPU*1	×	RS-232 RS-422	○	22.2.8
	A0J2HCPUP21*1				
	A0J2HCPUR21*1				
	A0J2HCPU-DC24*1				
	A2CCPU	○	-	×	-
	A2CCPUP21				
	A2CCPUR21				
	A2CCPUC24	○	RS-232 RS-422	○	22.2.8
	A2CCPUC24-PRF				
	A2CJCPU-S3	○	-	×	-
	A1FXCPU				
Motion controller CPU (Q Series)	Q172CPU*2*3	○	RS-232 RS-422	○	22.2.1
	Q173CPU*2*3				
	Q172CPUN*2				
	Q173CPUN*2				
	Q172HCPU				
	Q173HCPU				
	Q172DCPU				
	Q173DCPU				
	Q172DCPU-S1				
	Q173DCPU-S1				
	Q172DSCPU				
	Q173DSCPU				
	Q170MCPU*4				
	Q170MSCPU*6				
	Q170MSCPU-S1*6				

Series	Model	Clock	Communication	GT14 Handy	Refer to
Motion controller CPU (A Series)	A273UCPU	○	RS-232 RS-422	○	22.2.7
	A273UHCPU				
	A273UHCPU-S3				
	A373UCPU				
Motion controller CPU (A Series)	A373UCPU-S3	○	RS-232 RS-422	○	22.2.8
	A171SCPU				
	A171SCPU-S3				
	A171SCPU-S3N				
	A171SHCPU*5				
	A171SHCPUN*5				
	A172SHCPU*5				
	A172SHCPUN*5				
	A173UHCPU				
	A173UHCPU-S1				
MELSEC-WS	WS0-CPU0	×	-	×	-
	WS0-CPU1				
	WS0-CPU3				
MELSECNET/H remote I/O station	QJ72LP25-25	×	RS-232 RS-422	○	22.2.1
	QJ72LP25G				
	QJ72BR15				
CNC C70	Q173NCCPU	○	RS-232 RS-422	○	22.2.1
CC-Link IE Field Network head module	LJ72GF15-T2	×	RS-232 RS-422	○	22.2.3
CC-Link IE field Network Ethernet adapter module	NZ2GF-ETB	×	-	×	-
Robot controller	CRnQ-700 (Q172DRCPU) CR750-Q (Q172DRCPU) CR751-Q (Q172DRCPU)	○	RS-232 RS-422	○	22.2.1
MELSEC-FX	FX0, FX0S, FX0N FX1	×	-	×	-
	FX2, FX2C	×	-	×	
	FX1S, FX1N, FX2N, FX1NC	○	-	×	
	FX2NC	×	-	×	
	FX3S FX3G(C) FX3GE FX3U(C)	○	-	×	

*1 The computer link module version U or later supports the A2SCPU(S1), A2SHCPU(S1), A1SHCPU, A1SJHCPU and A0J2HCPU.
In addition, A0J2-C214-S1 (A0J2HCPU-dedicated computer link module) cannot be used.

*2 When using SV13, SV22, or SV43, use the motion controller CPU on which any of the following main OS version is installed.
- SW6RN-SV13Q□: 00H or later
- SW6RN-SV22Q□: 00H or later
- SW6RN-SV43Q□: 00B or later

*3 Use main modules with the following product numbers.
- Q172CPU: Product number N******* or later
- Q173CPU: Product number M******* or later

*4 Only the first step can be used on the extension base unit (Q52B/Q55B).

*5 For computer link connection of A171SHCPU(N) and A172SHCPU(N), use the computer link module whose software version is version U or later.

*6 The extension base unit (Q5□B/Q6□B) can be used.

22.1.2 Serial communication module/Computer link module

CPU series	Model name[*1]
MELSEC iQ-R Series Motion controller CPU (MELSEC iQ-R Series) C Controller module[*7] (MELSEC iQ-R Series)	RJ71C24, RJ71C24-R2, RJ71C24-R4
MELSEC-Q(Q mode) Motion controller CPU (Q Series) MELSECNET/H remote I/O station CNC C70 Robot controller (CRnQ-700)	QJ71C24[*2], QJ71C24-R2[*2]
	QJ71C24N, QJ71C24N-R2, QJ71C24N-R4
	QJ71CMO[*3], QJ71CMON[*3]
MELSEC-L	LJ71C24, LJ71C24-R2
MELSEC-Q (A mode)	A1SJ71UC24-R2, A1SJ71UC24-R4, A1SJ71UC24-PRF
	A1SJ71C24-R2, A1SJ71C24-R4, A1SJ71C24-PRF
MELSEC-QnA(QnACPU) MELSEC-QnA(QnASCPU)	AJ71QC24[*4], AJ71QC24-R2[*4], AJ71QC24-R4[*4]
	AJ71QC24N[*4], AJ71QC24N-R2[*4], AJ71QC24N-R4[*4]
	A1SJ71QC24[*4], A1SJ71QC24-R2[*4]
	A1SJ71QC24N[*4], A1SJ71QC24N-R2[*4]
	A1SJ71QC24N1[*4], A1SJ71QC24N1-R2[*4]
	AJ71UC24[*4*6]
	A1SJ71C24-R2[*6], A1SJ71C24-R4[*6], A1SJ71C24-PRF[*6]
	A1SJ71UC24-R2[*6], A1SJ71UC24-R4[*6], A1SJ71C24-PRF[*6]
MELSEC-A(AnCPU) MELSEC-A(AnSCPU) MELSEC-A Motion controller CPU (A Series)	AJ71UC24[*4*5]
	A1SJ71UC24-R2[*5], A1SJ71UC24-R4[*5], A1SJ71UC24-PRF[*5]
	A1SJ71C24-R2[*5], A1SJ71C24-R4[*5], A1SJ71C24-PRF[*5]
	A1SCPUC24-R2[*5]
	A2CCPUC24[*4], A2CCPUC24-PRF[*4]

*1 Communication cannot be performed with RS-485.
A0J2-C214-S1 cannot be used.

*2 Either CH1 or CH2 can be used for the function version A. Both CH1 and CH2 can be used together for the function version B or later.

*3 Only CH2 can be connected.

*4 Either CH1 or CH2 can be used.

*5 The computer link module version U or later supports the A2SCPU(S1), A2SHCPU(S1), A1SHCPU, A1SJHCPU, A0J2HCPU, A171SHCPU(N), and A172SHCPU(N).

*6 The module operates in the device range on AnACPU.

*7 Use the serial port of a serial communication module controlled by another CPU on the multiple CPU.

22.2 System Configuration

22.2.1 Connecting to MELSEC iQ-R series

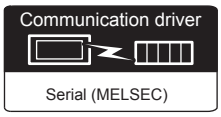

(1) When using the connector conversion box

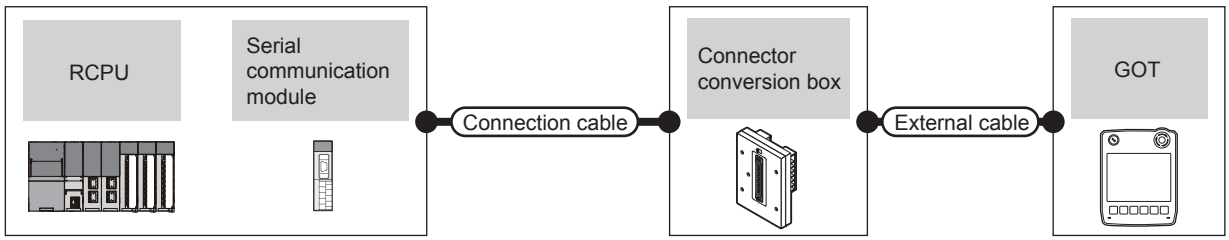

PLC			Connection cable	Connector conversion box	External cable	GOT model	Total distance	Number of connectable equipment
Model	Serial communication module*1	Communication type	Cable model					
MELSEC iQ-R Series	RJ71C24 RJ71C24-R2	RS-232	GT09-C30R2-9P (3m) or User preparing RS232 connection diagram 1)	GT11H-CNB-37S	GT11H-C30-37P (3m)	GT14 Handy	6m	2 GOTs for 1 serial communication module
	RJ71C24 RJ71C24-R4	RS-422	GT09-C30R4-6C (3m) GT09-C100R4-6C (10m) or User preparing RS422 connection diagram 1)	GT11H-CNB-37S	GT11H-C30-37P (3m) GT11H-C60-37P (6m) GT11H-C100-37P (10m)	GT14 Handy	13m	

*1 For details on the system configuration on the serial communication module side, refer to the following manual.

Manuals of MELSEC iQ-R Series

(2) When using the external cable (GT11H-C□□□-37P)

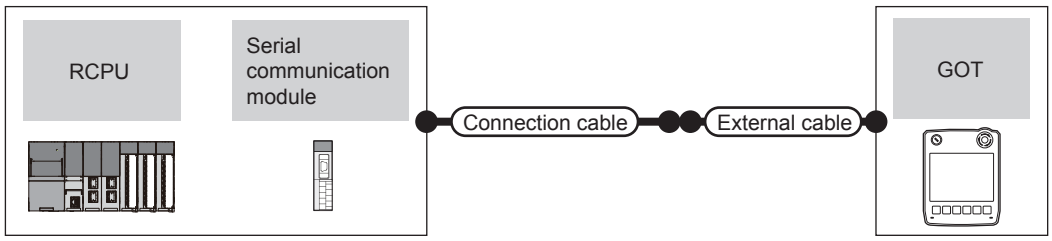

PLC			Connection cable	External cable	GOT model	Total distance	Number of connectable equipment
Model	Serial communication module*1	Communication type	Cable model				
MELSEC iQ-R Series	RJ71C24 RJ71C24-R2	RS-232	User preparing RS232 connection diagram 2)	GT11H-C30-37P (3m)	GT14 Handy	6m	2 GOTs for 1 serial communication module
	RJ71C24 RJ71C24-R4	RS-422	User preparing RS422 connection diagram 2)	GT11H-C30-37P (3m) GT11H-C60-37P (6m) GT11H-C100-37P (10m)	GT14 Handy	13m	

*1 For details on the system configuration on the serial communication module side, refer to the following manual.

Manuals of MELSEC iQ-R Series

(3) When using the external cable (GT11H-C□□□)

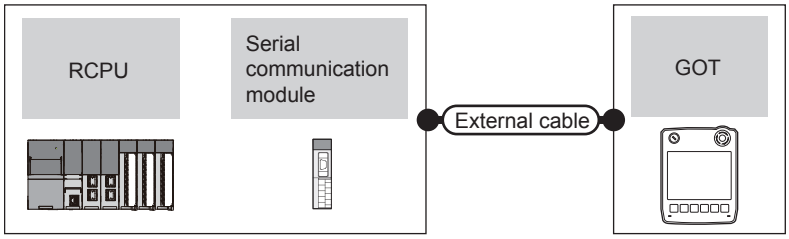

PLC			External cable	GOT model	Total distance	Number of connectable equipment
Model	Serial communication module*1	Communication type				
MELSEC iQ-R Series	RJ71C24 RJ71C24-R2	RS-232	GT11H-C30 (3m) GT11H-C60 (6m) (User preparing) RS232 connection diagram 3)	GT14 Handy	6m	2 GOTs for 1 serial communication module
	RJ71C24 RJ71C24-R4	RS-422	GT11H-C30 (3m) GT11H-C60 (6m) GT11H-C100 (10m) (User preparing) RS422 connection diagram 3)	GT14 Handy	13m	

*1 For details on the system configuration on the serial communication module side, refer to the following manual.

Manuals of MELSEC iQ-R Series

22.2.2 Connecting to QCPU (Q mode)

(1) When using the connector conversion box

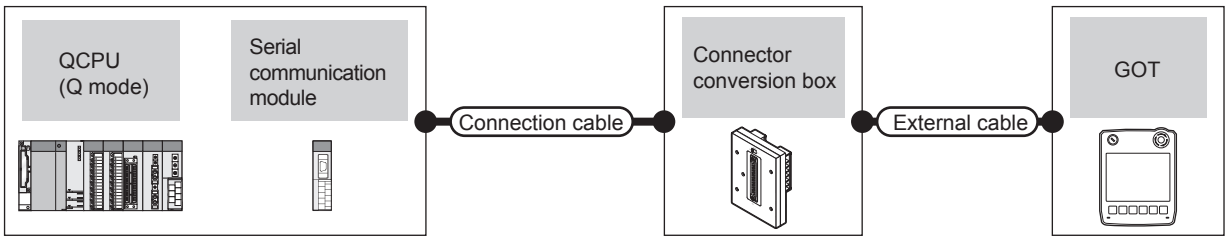

PLC			Connection cable	Connector conversion box	External cable	GOT model	Total distance	Number of connectable equipment
Model	Serial communication module*1	Communication type	Cable model					
MELSEC-Q (Q mode)	QJ71C24 QJ71C24N QJ71C24-R2 QJ71C24N-R2 QJ71CMO QJ71CMON	RS-232	GT09-C30R2-9P(3m) or (User preparing) RS232 connection diagram 1)	GT11H-CNB-37S	GT11H-C30-37P (3m)	GT14 Handy	6m	2 GOTs for 1 serial communication module*2
	QJ71C24 QJ71C24N QJ71C24N-R4	RS-422	GT09-C30R4-6C(3m) GT09-C100R4-6C(10m) or (User preparing) RS422 connection diagram 1)	GT11H-CNB-37S	GT11H-C30-37P (3m) GT11H-C60-37P (6m) GT11H-C100-37P (10m)	GT14 Handy	13m	1 GOT for 1 modem interface module

*1 For details on the system configuration on the serial communication module side, refer to the following manual.

Q Corresponding Serial Communication Module User's Manual (Basic)

For details on the system configuration on the modem interface module side, refer to the following manual.

Modem Interface Module User's Manual

*2 Two GOTs can be connected with the function version B or later of the serial communication module.

(2) When using the external cable (GT11H-C□□□-37P)

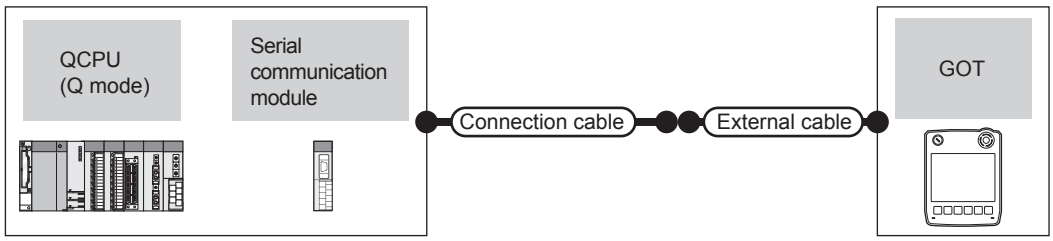

PLC			Connection cable	External cable	GOT model	Total distance	Number of connectable equipment
Model	Serial communication module*1	Communication type	Cable model				
MELSEC-Q (Q mode)	QJ71C24 QJ71C24N QJ71C24-R2 QJ71C24N-R2 QJ71CMO QJ71CMON	RS-232	User preparing RS232 connection diagram 2)	GT11H-C30-37P (3m)	GT14 Handy	6m	2 GOTs for 1 serial communication module*2 1 GOT for 1 modem interface module
	QJ71C24 QJ71C24N QJ71C24N-R4	RS-422	User preparing RS422 connection diagram 2)	GT11H-C30-37P (3m) GT11H-C60-37P (6m) GT11H-C100-37P (10m)	GT14 Handy	13m	

*1 For details on the system configuration on the serial communication module side, refer to the following manual.

Q Corresponding Serial Communication Module User's Manual (Basic)

For details on the system configuration on the modem interface module side, refer to the following manual.

Modem Interface Module User's Manual

*2 Two GOTs can be connected with the function version B or later of the serial communication module.

(3) When using the external cable (GT11H-C□□□)

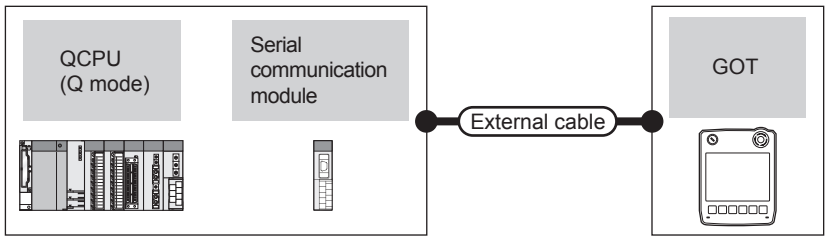

PLC			External cable	GOT model	Total distance	Number of connectable equipment
Model	Serial communication module*1	Communication type				
MELSEC-Q (Q mode)	QJ71C24 QJ71C24N QJ71C24-R2 QJ71C24N-R2 QJ71CMO QJ71CMON	RS-232	GT11H-C30(3m) GT11H-C60(6m) User preparing RS232 connection diagram 3)	GT14 Handy	6m	2 GOTs for 1 serial communication module*2 1 GOT for 1 modem interface module
	QJ71C24 QJ71C24N QJ71C24N-R4	RS-422	GT11H-C30(3m) GT11H-C60(6m) GT11H-C100(10m) User preparing RS422 connection diagram 3)	GT14 Handy	13m	

*1 For details on the system configuration on the serial communication module side, refer to the following manual.

Q Corresponding Serial Communication Module User's Manual (Basic)

For details on the system configuration on the modem interface module side, refer to the following manual.

Modem Interface Module User's Manual

*2 Two GOTs can be connected with the function version B or later of the serial communication module.

22.2.3 Connecting to LCPU

Communication driver

Serial (MELSEC)

(1) When using the connector conversion box

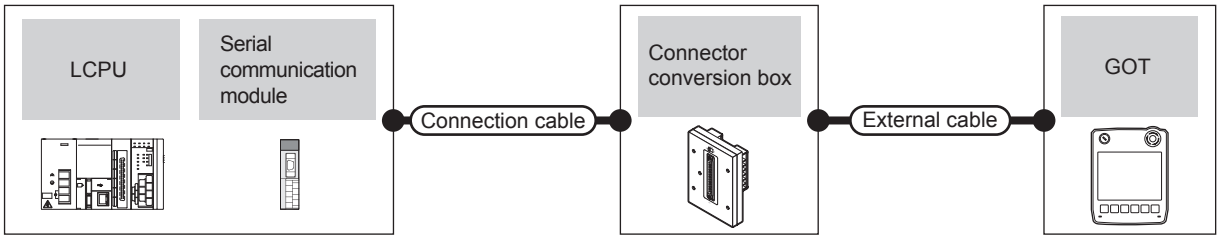

PLC			Connection cable	Connector conversion box	External cable	GOT model	Total distance	Number of connectable equipment
Model	Serial communication module*1	Communication type	Cable model					
MELSEC-L	LJ71C24 LJ71C24-R2	RS-232	GT09-C30R2-9P(3m) or User preparing RS232 connection diagram 1)	GT11H-CNB-37S	GT11H-C30-37P (3m)	GT14 Handy	6m	2 GOTs for 1 serial communication module
	LJ71C24	RS-422	GT09-C30R4-6C(3m) GT09-C100R4-6C(10m) or User preparing RS422 connection diagram 1)	GT11H-CNB-37S	GT11H-C30-37P (3m) GT11H-C60-37P (6m) GT11H-C100-37P (10m)	GT14 Handy	13m	

*1 For details on the system configuration on the serial communication module side, refer to the following manual.

MELSEC-L Serial Communication Module User's Manual (Basic)

(2) When using the external cable (GT11H-C□□□-37P)

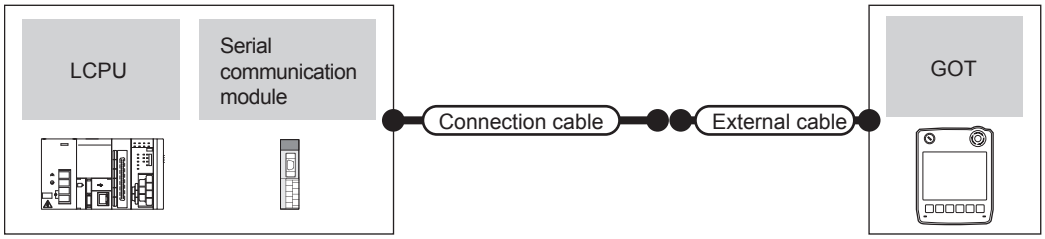

PLC			Connection cable	External cable	GOT model	Total distance	Number of connectable equipment
Model	Serial communication module*1	Communication type	Cable model				
MELSEC-L	LJ71C24 LJ71C24-R2	RS-232	User preparing RS232 connection diagram 2)	GT11H-C30-37P (3m)	GT14 Handy	6m	2 GOTs for 1 serial communication module
	LJ71C24	RS-422	User preparing RS422 connection diagram 2)	GT11H-C30-37P (3m) GT11H-C60-37P (6m) GT11H-C100-37P (10m)	GT14 Handy	13m	

*1 For details on the system configuration on the serial communication module side, refer to the following manual.

MELSEC-L Serial Communication Module User's Manual (Basic)

(3) When using the external cable (GT11H-C□□□)

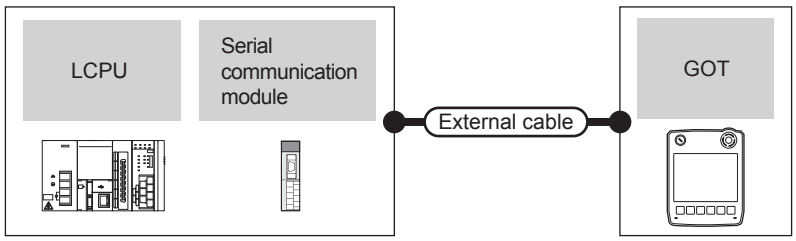

PLC			External cable	GOT model	Total distance	Number of connectable equipment
Model	Serial communication module*1	Communication type				
MELSEC-L	LJ71C24 LJ71C24-R2	RS-232	GT11H-C30(3m) GT11H-C60(6m) User preparing RS232 connection diagram 3)	GT14 Handy	6m	2 GOTs for 1 serial communication module
	LJ71C24	RS-422	GT11H-C30(3m) GT11H-C60(6m) GT11H-C100(10m) User preparing RS422 connection diagram 3)	GT14 Handy	13m	

*1 For details on the system configuration on the serial communication module side, refer to the following manual.

MELSEC-L Serial Communication Module User's Manual (Basic)

22.2.4 Connecting to QCPU (A mode)

Communication driver

Serial (MELSEC)

(1) When using the connector conversion box

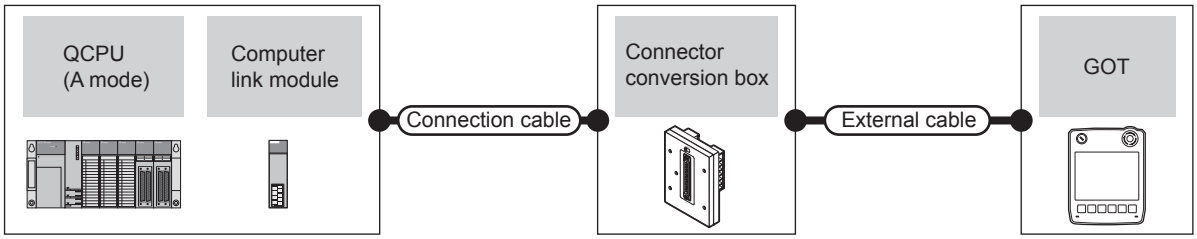

PLC			Connection cable	Connector conversion box	External cable	GOT model	Total distance	Number of connectable equipment
Model	Computer link module*1	Communication type	Cable model					
MELSEC-Q (A mode)	A1SJ71UC24-R2 A1SJ71C24-R2 A1SJ71UC24-PRF A1SJ71C24-PRF	RS-232	GT09-C30R2-9P(3m) or User preparing RS232 connection diagram 1)	GT11H-CNB-37S	GT11H-C30-37P (3m)	GT14 Handy	6m	1 GOT for 1 computer link module
	A1SJ71UC24-R4 A1SJ71C24-R4	RS-422	GT09-C30R4-6C(3m) GT09-C100R4-6C(10m) or User preparing RS422 connection diagram 1)	GT11H-CNB-37S	GT11H-C30-37P (3m) GT11H-C60-37P (6m) GT11H-C100-37P (10m)	GT14 Handy	13m	

*1 For the system configuration on the computer link module side, refer to the following manual.

Computer Link Module (Com. link func./Print. func.) User's Manual

(2) When using the external cable (GT11H-C□□□-37P)

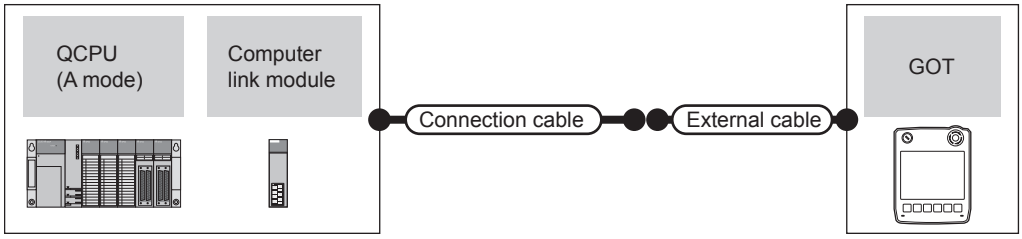

PLC			Connection cable	External cable	GOT model	Total distance	Number of connectable equipment
Model	Computer link module*1	Communication type	Cable model				
MELSEC-Q (A mode)	A1SJ71UC24-R2 A1SJ71C24-R2 A1SJ71UC24-PRF A1SJ71C24-PRF	RS-232	User preparing RS232 connection diagram 2)	GT11H-C30-37P (3m)	GT14 Handy	6m	1 GOT for 1 computer link module
	A1SJ71UC24-R4 A1SJ71C24-R4	RS-422	User preparing RS422 connection diagram 2)	GT11H-C30-37P (3m) GT11H-C60-37P (6m) GT11H-C100-37P (10m)	GT14 Handy	13m	

*1 For the system configuration on the computer link module side, refer to the following manual.

Computer Link Module (Com. link func./Print. func.) User's Manual

(3) When using the external cable (GT11H-C□□□)

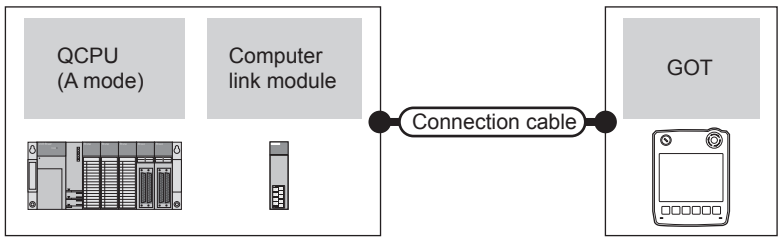

PLC			External cable	GOT model	Total distance	Number of connectable equipment
Model	Computer link module*1	Communication type				
MELSEC-Q (A mode)	A1SJ71UC24-R2 A1SJ71C24-R2 A1SJ71UC24-PRF A1SJ71C24-PRF	RS-232	GT11H-C30(3m) GT11H-C60(6m) User preparing RS232 connection diagram 3)	GT14 Handy	6m	1 GOT for 1 computer link module
	A1SJ71UC24-R4 A1SJ71C24-R4	RS-422	GT11H-C30(3m) GT11H-C60(6m) GT11H-C100(10m) User preparing RS422 connection diagram 3)	GT14 Handy	13m	

*1 For the system configuration on the computer link module side, refer to the following manual.

Computer Link Module (Com. link func./Print. func.) User's Manual

22.2.5 Connecting to QnACPU (QnACPU type)

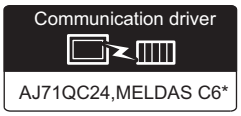

(When connecting to a computer link module)

(1) When using the connector conversion box

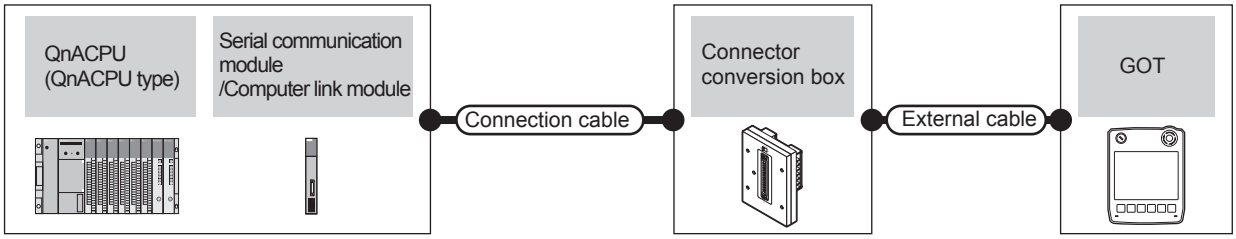

PLC			Connection cable	Connector conversion box	External cable	GOT model	Total distance	Number of connectable equipment
Model	Serial communication module*1 or Computer link module*2	Communication Type	Cable model					
MELSEC-QnA (QnACPU)	AJ71QC24 AJ71QC24N AJ71QC24-R2 AJ71QC24N-R2	RS-232	GT09-C30R2-25P(3m) or User preparing RS232 connection diagram 4)	GT11H-CNB-37S	GT11H-C30-37P (3m)	GT14 Handy	6m	1 GOT for 1 serial communication module
	AJ71QC24-R4 AJ71QC24N-R4	RS-422	GT01-C30R4-25P(3m) GT01-C100R4-25P(10m)	GT11H-CNB-37S	GT11H-C30-37P (3m) GT11H-C60-37P (6m) GT11H-C100-37P (10m)	GT14 Handy	13m	
	AJ71QC24 AJ71QC24N AJ71QC24-R4 AJ71QC24N-R4	RS-422	GT09-C30R4-6C(3m) GT09-C100R4-6C(10m) or User preparing RS422 connection diagram 1)	GT11H-CNB-37S	GT11H-C30-37P (3m) GT11H-C60-37P (6m) GT11H-C100-37P (10m)	GT14 Handy	13m	
	AJ71UC24	RS-232	GT09-C30R2-25P(3m) or User preparing RS232 connection diagram 4)	GT11H-CNB-37S	GT11H-C30-37P (3m)	GT14 Handy	6m	1 GOT for 1 computer link module
	AJ71UC24	RS-422	GT09-C30R4-6C(3m) GT09-C100R4-6C(10m) or User preparing RS422 connection diagram 1)	GT11H-CNB-37S	GT11H-C30-37P (3m) GT11H-C60-37P (6m) GT11H-C100-37P (10m)	GT14 Handy	13m	

*1 For details on the system configuration on the serial communication module side, refer to the following manual.

Serial Communications Module User's Manual (Modem Function Additional Version)

*2 For the system configuration on the computer link module side, refer to the following manual.

Computer Link Module (Com. link func./Print. func.) User's Manual

When connecting to a computer link module, set the communication driver to [AJ71C24/UC24].

(2) When using the external cable (GT11H-C□□□-37P)

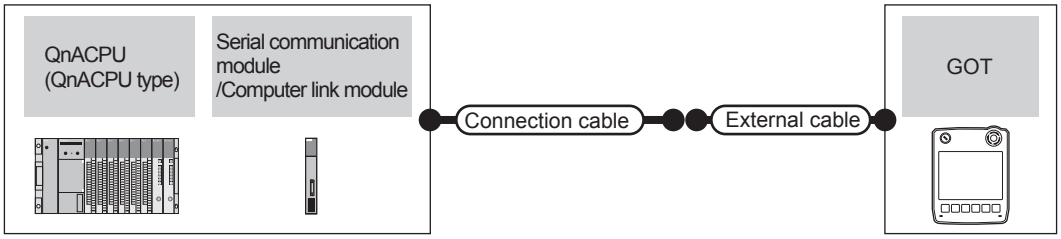

PLC			Connection cable	External cable	GOT model	Total distance	Number of connectable equipment
Model	Serial communication module*1 or Computer link module*2	Communication Type	Cable model				
MELSEC-QnA (QnACPU)	AJ71QC24 AJ71QC24N AJ71QC24-R2 AJ71QC24N-R2	RS-232	User preparing RS232 connection diagram 5)	GT11H-C30-37P (3m)	GT14 Handy	6m	1 GOT for 1 serial communication module
	AJ71QC24 AJ71QC24N AJ71QC24-R4 AJ71QC24N-R4	RS-422	User preparing RS422 connection diagram 2)	GT11H-C30-37P (3m) GT11H-C60-37P (6m) GT11H-C100-37P (10m)	GT14 Handy	13m	
	AJ71UC24	RS-232	User preparing RS232 connection diagram 5)	GT11H-C30-37P (3m)	GT14 Handy	6m	1 GOT for 1 computer link module
	AJ71UC24	RS-422	User preparing RS422 connection diagram 2)	GT11H-C30-37P (3m) GT11H-C60-37P (6m) GT11H-C100-37P (10m)	GT14 Handy	13m	

*1 For details on the system configuration on the serial communication module side, refer to the following manual.

Serial Communications Module User's Manual (Modem Function Additional Version)

*2 For the system configuration on the computer link module side, refer to the following manual.

Computer Link Module (Com. link func./Print. func.) User's Manual

When connecting to a computer link module, set the communication driver to [AJ71C24/UC24].

(3) When using the external cable (GT11H-C□□□)

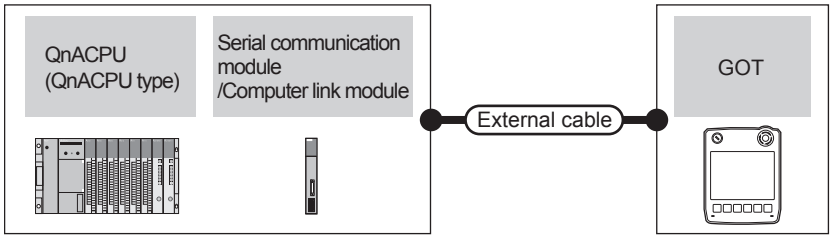

PLC			External cable	GOT model	Total distance	Number of connectable equipment
Model	Serial communication module*1 or Computer link module*2	Communication type				
MELSEC-QnA (QnACPU)	AJ71QC24 AJ71QC24N AJ71QC24-R2 AJ71QC24N-R2	RS-232	GT11H-C30 (3m) GT11H-C60 (6m) User preparing RS232 connection diagram 6)	GT14 Handy	6m	1 GOT for 1 serial communication module
	AJ71QC24 AJ71QC24N AJ71QC24-R4 AJ71QC24N-R4	RS-422	GT11H-C30 (3m) GT11H-C60 (6m) GT11H-C100 (10m) User preparing RS422 connection diagram 3)	GT14 Handy	13m	
	AJ71UC24	RS-232	GT11H-C30 (3m) GT11H-C60 (6m) User preparing RS232 connection diagram 6)	GT14 Handy	6m	1 GOT for 1 computer link module
	AJ71UC24	RS-422	GT11H-C30 (3m) GT11H-C60 (6m) GT11H-C100 (10m) User preparing RS422 connection diagram 3)	GT14 Handy	13m	

*1 For details on the system configuration on the serial communication module side, refer to the following manual.

Serial Communications Module User's Manual (Modem Function Additional Version)

*2 For the system configuration on the computer link module side, refer to the following manual.

Computer Link Module (Com. link func./Print. func.) User's Manual

When connecting to a computer link module, set the communication driver to [AJ71C24/UC24].

22.2.6 Connecting to QnACPU (QnASCPU type)

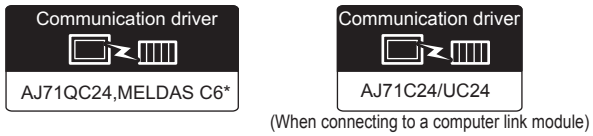

(When connecting to a computer link module)

(1) When using the connector conversion box

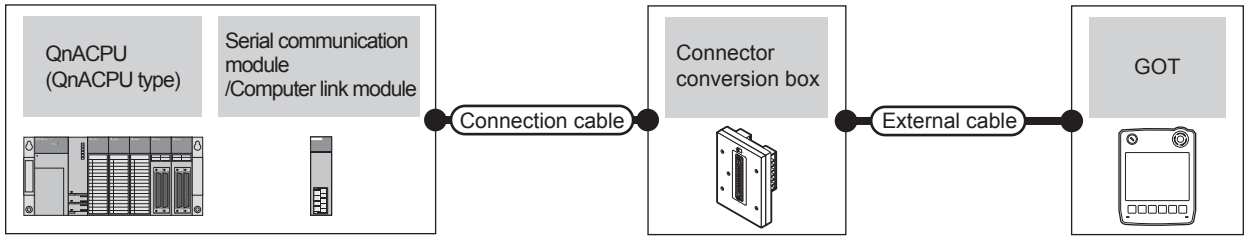

PLC			Connection cable	Connector conversion box	External cable	GOT model	Total distance	Number of connectable equipment
Model	Serial communication unit*1 or computer link module*2	Communication Type	Cable model					
MELSEC-QnA (QnACPU)	A1SJ71QC24 A1SJ71QC24N A1SJ71QC24N1 A1SJ71QC24-R2 A1SJ71QC24N-R2 A1SJ71QC24N1-R2	RS-232	GT09-C30R2-9P(3m) or User preparing RS232 connection diagram 1)	GT11H-CNB-37S	GT11H-C30-37P (3m)	GT14 Handy	6m	1 GOT for 1 serial communication module
MELSEC-QnA (QnACPU)	A1SJ71QC24 A1SJ71QC24N A1SJ71QC24N1	RS-422	GT09-C30R4-6C(3m) GT09-C100R4-6C(10m) or User preparing RS422 connection diagram 1)	GT11H-CNB-37S	GT11H-C30-37P (3m) GT11H-C60-37P (6m) GT11H-C100-37P (10m)	GT14 Handy	13m	
MELSEC-QnA (QnACPU)	A1SJ71UC24-R2 A1SJ71C24-R2 A1SJ71UC24-PRF A1SJ71C24-PRF	RS-232	GT09-C30R2-9P(3m) or User preparing RS232 connection diagram 1)	GT11H-CNB-37S	GT11H-C30-37P (3m)	GT14 Handy	6m	1 GOT for 1 computer link module
	A1SJ71UC24-R4 A1SJ71C24-R4	RS-422	GT09-C30R4-6C(3m) GT09-C100R4-6C(10m) or User preparing RS422 connection diagram 1)	GT11H-CNB-37S	GT11H-C30-37P (3m) GT11H-C60-37P (6m) GT11H-C100-37P (10m)	GT14 Handy	13m	

*1 For details on the system configuration on the serial communication module side, refer to the following manual.

Serial Communication Module User's Manual (Modem Function Additional Version)

*2 For the system configuration on the computer link module side, refer to the following manual.

Computer Link Module (Com. link func./Print. func.) User's Manual

(2) When using the external cable (GT11H-C□□□-37P)

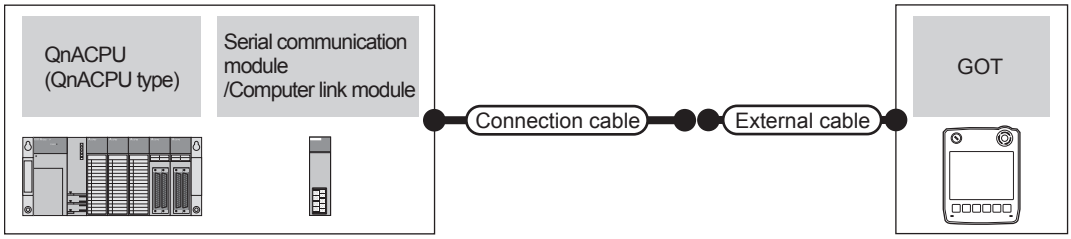

PLC			Connection cable	External cable	GOT model	Total distance	Number of connectable equipment
Model	Serial communication unit*1 or computer link module*2	Communication type	Cable model				
MELSEC-QnA (QnACPU)	A1SJ71QC24 A1SJ71QC24N A1SJ71QC24N1 A1SJ71QC24-R2 A1SJ71QC24N-R2 A1SJ71QC24N1-R2	RS-232	User preparing RS232 connection diagram 2)	GT11H-C30-37P (3m)	GT14 Handy	6m	1 GOT for 1 serial communication module
MELSEC-QnA (QnACPU)	A1SJ71QC24 A1SJ71QC24N A1SJ71QC24N1	RS-422	User preparing RS422 connection diagram 2)	GT11H-C30-37P (3m) GT11H-C60-37P (6m) GT11H-C100-37P (10m)	GT14 Handy	13m	
MELSEC-QnA (QnACPU)	A1SJ71UC24-R2 A1SJ71C24-R2 A1SJ71UC24-PRF A1SJ71C24-PRF	RS-232	User preparing RS232 connection diagram 2)	GT11H-C30-37P (3m)	GT14 Handy	6m	1 GOT for 1 computer link module
	A1SJ71UC24-R4 A1SJ71C24-R4	RS-422	User preparing RS422 connection diagram 2)	GT11H-C30-37P (3m) GT11H-C60-37P (6m) GT11H-C100-37P (10m)	GT14 Handy	13m	

*1 For details on the system configuration on the serial communication module side, refer to the following manual.

Serial Communication Module User's Manual (Modem Function Additional Version)

*2 For the system configuration on the computer link module side, refer to the following manual.

Computer Link Module (Com. link func./Print. func.) User's Manual

(3) When using the external cable (GT11H-C□□□)

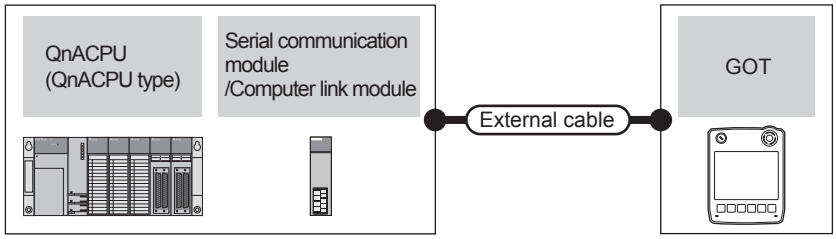

PLC			External cable	GOT model	Total distance	Number of connectable equipment
Model	Serial communication unit*1 or computer link module*2	Communication type				
MELSEC-QnA (QnACPU)	A1SJ71QC24 A1SJ71QC24N A1SJ71QC24N1 A1SJ71QC24-R2 A1SJ71QC24N-R2 A1SJ71QC24N1-R2	RS-232	GT11H-C30(3m) GT11H-C60(6m) User preparing RS232 connection diagram 3)	GT14 Handy	6m	1 GOT for 1 serial communication module
MELSEC-QnA (QnACPU)	A1SJ71QC24 A1SJ71QC24N A1SJ71QC24N1	RS-422	GT11H-C30(3m) GT11H-C60(6m) GT11H-C100(10m) User preparing RS422 connection diagram 3)	GT14 Handy	13m	
MELSEC-QnA (QnACPU)	A1SJ71UC24-R2 A1SJ71C24-R2 A1SJ71UC24-PRF A1SJ71C24-PRF	RS-232	GT11H-C30(3m) GT11H-C60(6m) User preparing RS232 connection diagram 3)	GT14 Handy	6m	1 GOT for 1 computer link module
	A1SJ71UC24-R4 A1SJ71C24-R4	RS-422	GT11H-C30(3m) GT11H-C60(6m) GT11H-C100(10m) User preparing RS422 connection diagram 3)	GT14 Handy	13m	

*1 For details on the system configuration on the serial communication module side, refer to the following manual.

Serial Communication Module User's Manual (Modem Function Additional Version)

*2 For the system configuration on the computer link module side, refer to the following manual.

Computer Link Module (Com. link func./Print. func.) User's Manual

22.2.7 Connecting to ACPU (AnCPU type)

Communication driver
AJ71C24/UC24

(1) When using the connector conversion box

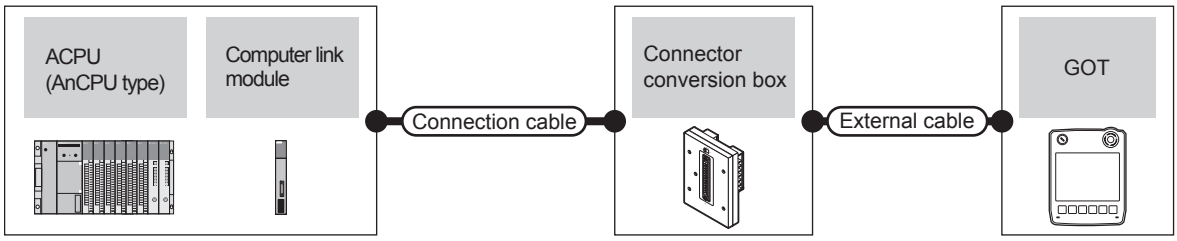

PLC			Connection cable	Connector conversion box	External cable	GOT model	Total distance	Number of connectable equipment
Model	Computer link module*1	Communication type	Cable model					
MELSEC-A (AnCPU)	AJ71UC24	RS-232	GT09-C30R2-25P(3m) or User preparing RS232 connection diagram 4)	GT11H-CNB-37S	GT11H-C30-37P (3m)	GT14 Handy	6m	1 GOT for 1 computer link module
	AJ71UC24	RS-422	GT09-C30R4-6C(3m) GT09-C100R4-6C(10m) or User preparing RS422 connection diagram 1)	GT11H-CNB-37S	GT11H-C30-37P (3m) GT11H-C60-37P (6m) GT11H-C100-37P (10m)	GT14 Handy	13m	

*1 For the system configuration on the computer link module side, refer to the following manual.

Computer Link Module (Com. link func./Print. func.) User's Manual

(2) When using the external cable (GT11H-C□□□-37P)

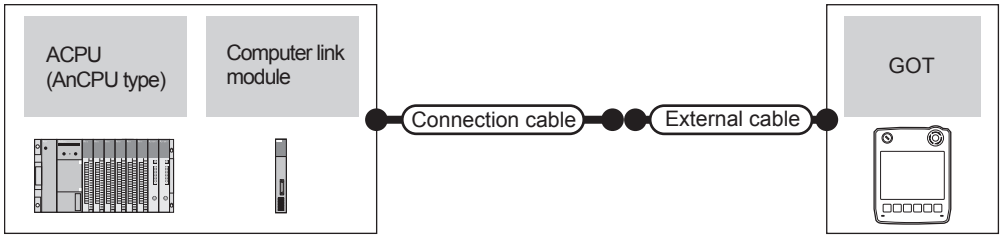

PLC			Connection cable	External cable	GOT model	Total distance	Number of connectable equipment
Model	Computer link module*1	Communication type	Cable model				
MELSEC-A (AnCPU)	AJ71UC24	RS-232	User preparing RS232 connection diagram 5)	GT11H-C30-37P (3m)	GT14 Handy	6m	1 GOT for 1 computer link module
	AJ71UC24	RS-422	User preparing RS422 connection diagram 2)	GT11H-C30-37P (3m) GT11H-C60-37P (6m) GT11H-C100-37P (10m)	GT14 Handy	13m	

*1 For the system configuration on the computer link module side, refer to the following manual.

Computer Link Module (Com. link func./Print. func.) User's Manual

(3) When using the external cable (GT11H-C□□□)

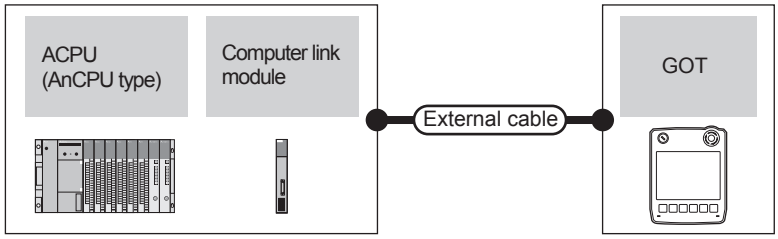

PLC			External cable	GOT model	Total distance	Number of connectable equipment
Model	Computer link module*1	Communication type				
MELSEC-A (AnCPU)	AJ71UC24	RS-232	GT11H-C30 (3m) GT11H-C60 (6m) User preparing RS232 connection diagram 6)	GT14 Handy	6m	1 GOT for 1 computer link module
	AJ71UC24	RS-422	GT11H-C30 (3m) GT11H-C60 (6m) GT11H-C100 (10m) User preparing RS422 connection diagram 3)	GT14 Handy	13m	

*1 For the system configuration on the computer link module side, refer to the following manual.

Computer Link Module (Com. link func./Print. func.) User's Manual

22.2.8 Connecting to ACPU (AnSCPU type, A0J2HCPU, A2CCPUC)

(1) When using the connector conversion box

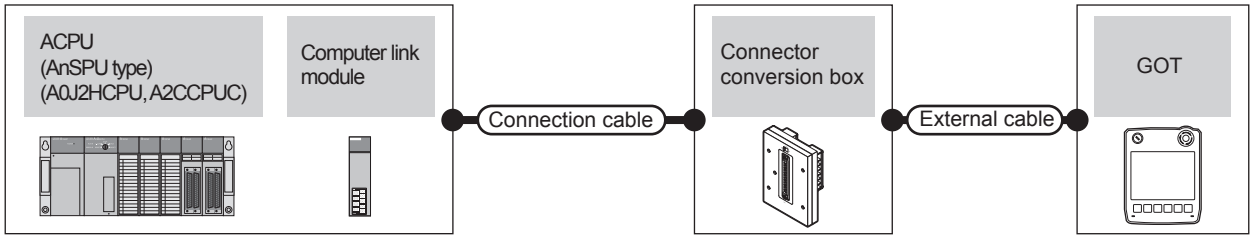

PLC			Connection cable	Connector conversion box	External cable	GOT model	Total distance	Number of connectable equipment
Model	Computer link module*1	Communication type	Cable model					
MELSEC-A (AnSCPU) (A0J2H) (A2CCPUC)	A1SJ71UC24-R2 A1SJ71C24-R2 A1SJ71UC24-PRF A1SJ71C24-PRF A1SCPUC24-R2 A2CCPUC24 A2CCPUC24-PRF	RS-232	GT09-C30R2-9P(3m) or User preparing RS232 connection diagram 1)	GT11H-CNB-37S	GT11H-C30-37P (3m)	GT14 Handy	6m	1 GOT for 1 computer link module
	A1SJ71UC24-R4 A1SJ71C24-R4	RS-422	GT09-C30R4-6C(3m) GT09-C100R4-6C(10m) or User preparing RS422 connection diagram 1)	GT11H-CNB-37S	GT11H-C30-37P (3m) GT11H-C60-37P (6m) GT11H-C100-37P (10m)	GT14 Handy	13m	

*1 For the system configuration on the computer link module side, refer to the following manual.

Computer Link Module (Com. link func./Print. func.) User's Manual

(2) When using the external cable (GT11H-C□□□-37P)

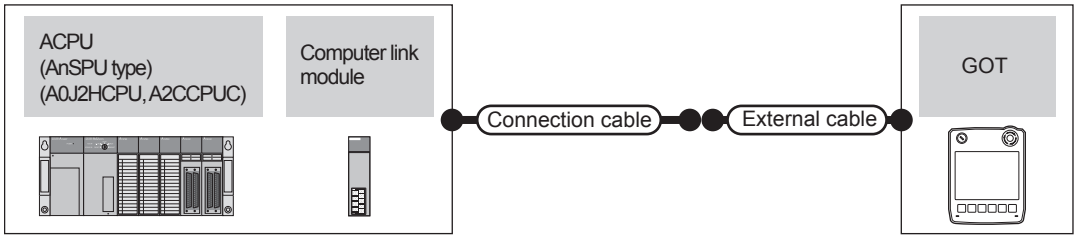

PLC			Connection cable	External cable	GOT model	Total distance	Number of connectable equipment
Model	Computer link module*1	Communication type	Cable model				
MELSEC-A (AnSCPU) (A0J2H) (A2CCPUC)	A1SJ71UC24-R2 A1SJ71C24-R2 A1SJ71UC24-PRF A1SJ71C24-PRF A1SCPUC24-R2 A2CCPUC24 A2CCPUC24-PRF	RS-232	User preparing RS232 connection diagram 2)	GT11H-C30-37P (3m)	GT14 Handy	6m	1 GOT for 1 computer link module
	A1SJ71UC24-R4 A1SJ71C24-R4	RS-422	User preparing RS422 connection diagram 2)	GT11H-C30-37P (3m) GT11H-C60-37P (6m) GT11H-C100-37P (10m)	GT14 Handy	13m	

*1 For the system configuration on the computer link module side, refer to the following manual.

Computer Link Module (Com. link func./Print. func.) User's Manual

(3) When using the external cable (GT11H-C□□□)

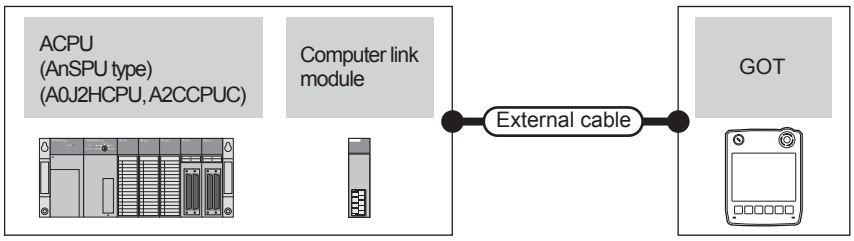

PLC			External cable	GOT model	Total distance	Number of connectable equipment
Model	Computer link module*1	Communication type				
MELSEC-A (AnSCPU) (A0J2H) (A2CCPUC)	A1SJ71UC24-R2 A1SJ71C24-R2 A1SJ71UC24-PRF A1SJ71C24-PRF A1SCPUC24-R2 A2CCPUC24 A2CCPUC24-PRF	RS-232	GT11H-C30(3m) GT11H-C60(6m) User preparing RS232 connection diagram 3)	GT14 Handy	6m	1 GOT for 1 computer link module
	A1SJ71UC24-R4 A1SJ71C24-R4	RS-422	GT11H-C30(3m) GT11H-C60(6m) GT11H-C100(10m) User preparing RS422 connection diagram 3)	GT14 Handy	13m	

*1 For the system configuration on the computer link module side, refer to the following manual.

Computer Link Module (Com. link func./Print. func.) User's Manual

22.3 Connection Diagram

The following diagram shows the connection between the GOT and the PLC.

22.3.1 RS-232 cable

■ Connection Diagram

RS232 connection diagram 1)

PLC side connector D-sub 9-pin

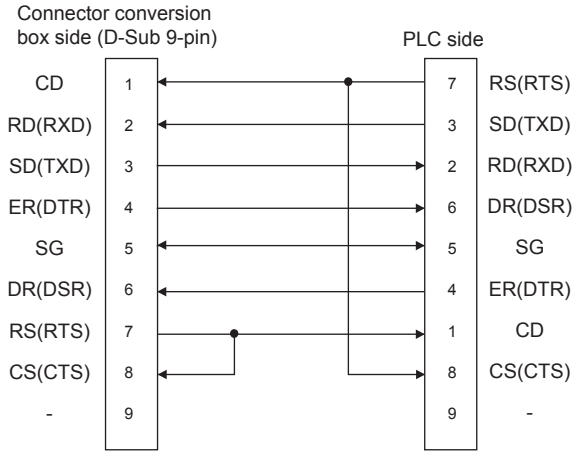

RS232 connection diagram 2)

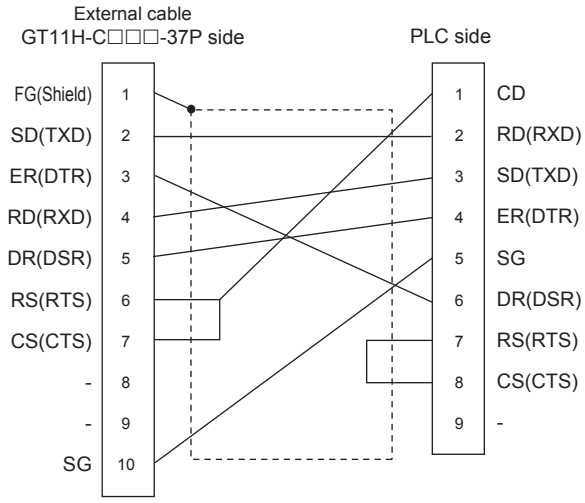

RS232 connection diagram 3)

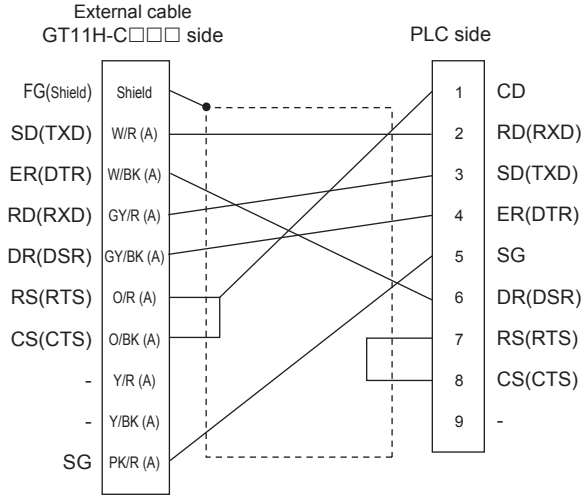

RS232 connection diagram 4)

PLC side connector D-sub 25-pin

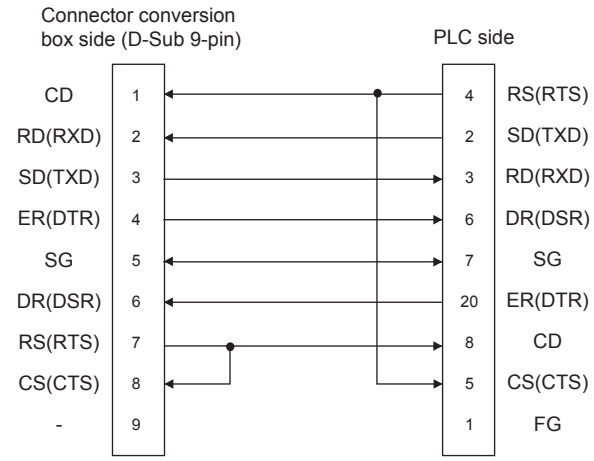

RS232 connection diagram 5)

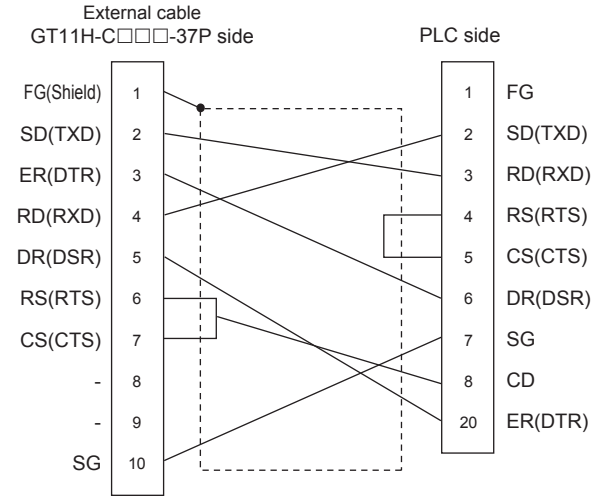

RS232 connection diagram 6)

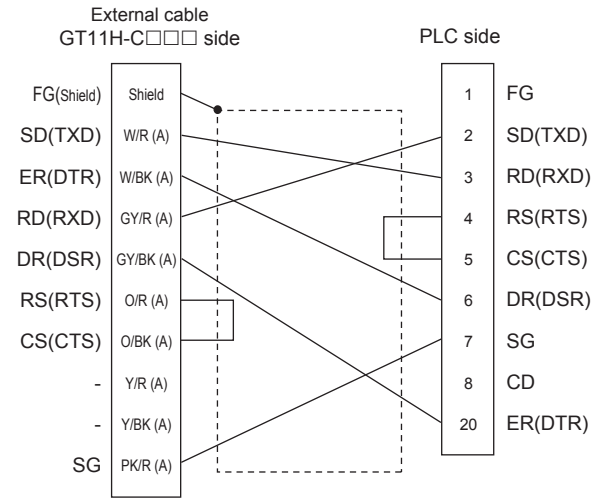

■ Precautions when preparing a cable

(1) Cable length
The total distance (between GOT and controllers) of RS-232 cable must be 6m or less.

(2) Connector conversion box side connector
For the connector conversion box side connector, refer to the following.

☞ 6.6 Connector Conversion Box

(3) External cable side connector
For the connector specifications of the external cable side, refer to the following.

☞ 8.2 External Cable, Relay Cable

22.3.2 RS-422 cable

■ Connection Diagram

RS422 connection diagram 1)

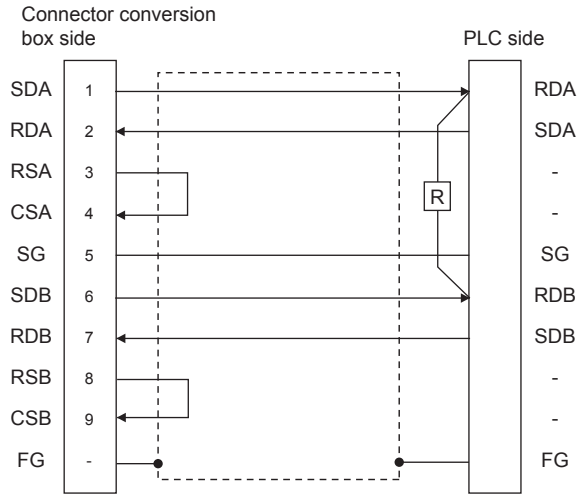

RS422 connection diagram 2)

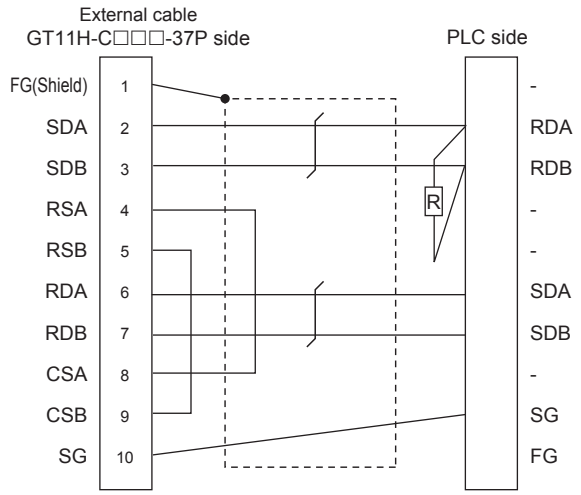

RS422 connection diagram 3)

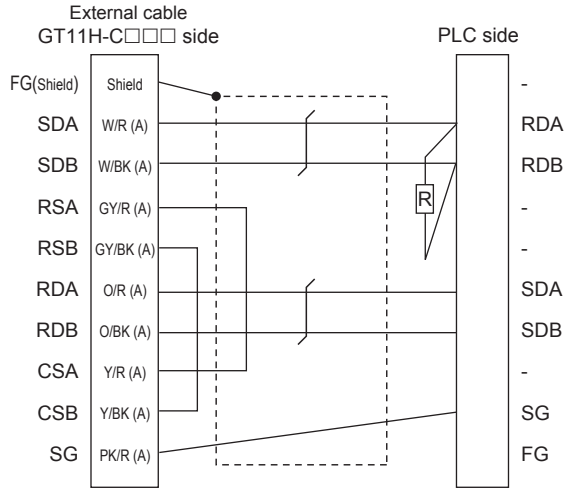

■ Precautions when preparing a cable

(1) Cable length
The total distance (between GOT and controllers) of RS-422 cable must be 13m or less.

(2) Connector conversion box side connector
For the Connector conversion box side connector, refer to the following.

☞ 6.6 Connector Conversion Box

(3) External cable side connector
For the connector specifications of the external cable side, refer to the following.

☞ 8.2 External Cable, Relay Cable

■ Connecting terminating resistors

(1) Serial communication module or computer link module side
Connect the terminating resistors (330Ω 1/4W (orange/orange/brown/☐)) on the serial communication module or computer link module side. For details, refer to the following manual:

☞ User's Manual for the serial communication module or computer link module

(a) Other than A2CCPUC24(-PRF)
Connect the terminating resistors supplied with the module across RDA and RDB.

(b) A2CCPUC24(-PRF)
Set TXD and RXD on the terminating resistor setting pin to "A".

22.4 GOT Side Settings

22.4.1 Setting communication interface (Communication settings)

Set the channel of the connected equipment.

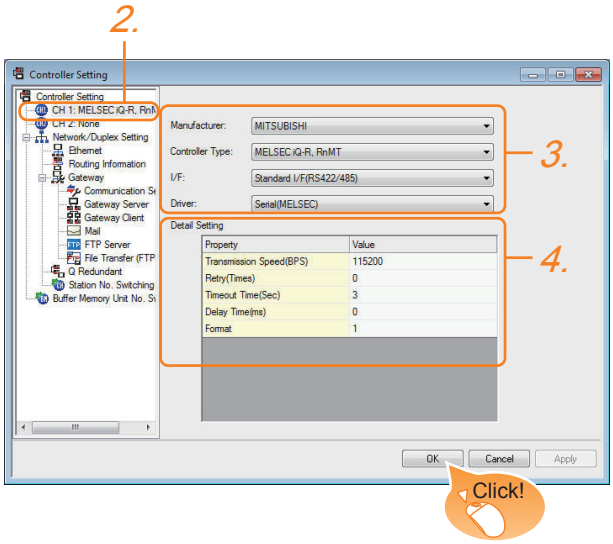

1. Select [Common] → [Controller Setting] from the menu.
2. The Controller Setting window is displayed. Select the channel to be used from the list menu.
3. Set the following items.
   - Manufacturer: Mitsubishi
   - Controller Type: Set according to the Controller Type to be connected.
   - I/F: Interface to be used
   - Driver: Set either of the following option according to the Controller Type to be connected.
     - Serial (MELSEC)
     - AJ71QC24, MELDAS C6*
     - AJ71C24/UC24
4. The detailed setting is displayed after Manufacturer, Controller Type, I/F, and Driver are set.
   Make the settings according to the usage environment.
   22.4.2 Communication detail settings

Click the OK button when settings are completed.

POINT

The settings of connecting equipment can be confirmed in [I/F Communication Setting].
For details, refer to the following.
18.1.2 I/F communication setting

22.4.2 Communication detail settings

Make the settings according to the usage environment.

(1) Serial (MELSEC)

Item	Description	Range
Transmission Speed	Set this item when change the transmission speed used for communication with the connected equipment. (Default: 115200bps) When the setting exceeds the limit of the connected equipment, communication is performed at the fastest transmission speed supported by the connected equipment	9600bps, 19200bps, 38400bps, 57600bps, 115200bps
Retry	Set the number of retries to be performed when a communication error occurs. (Default: 0time)	0 to 5times
Timeout Time	Set the time period for a communication to time out. (Default: 3sec)	3 to 30sec
Delay Time	Set this item to adjust the transmission timing of the communication request from the GOT. (Default: 0ms)	0 to 300 (ms)
Format	Select the communication format. (Default: 1)	1, 2
Monitor speed	Set the monitor speed of the GOT. This setting is not valid in all systems. (Default: Normal)	High*1 Normal Low*2

*1 This is effective when collecting a large data on other than the monitor screen (logging, recipe function, etc.).
However, the range may affect the sequence scan time when connecting to Q00UJ/Q00U/Q01U/Q02UCPU or Q00J/Q00/Q01CPU.
If you want to avoid the influence on the sequence scan time, do not set [High].
(This setting hardly affects QCPUs other than the above.)

*2 Set this range if you want to avoid the influence on the sequence scan time further than the [Normal] setting when connecting to Q00UJ/Q00U/Q01U/Q02UCPU or Q00J/Q00/Q01CPU.
However, the monitor speed may be reduced.

POINT

Setting [Format]

This setting is required for replacement of F900 series with GOT1000 series.

(1) To change the communication settings of the serial communication module which is connected to F900

The value of Transmission Speed can be set to 115200 bps.

• [Intelligent function module switch setting] on the PLC

Switch No.	CH1 side	CH2 side
Switch 1	0000H	-
Switch 2	0000H	-
Switch 3	-	0000H
Switch 4	-	0000H
Switch 5	0000H	0000H

• GOT communication settings

Format
1

(2) To maintain the communication settings of the serial communication module which is connected to F900

The value of Transmission Speed remains 38400bps.

• GOT communication settings

Format	Transmission Speed
2	38400bps

(2) AJ71QC24, MELDAS C6*

Item	Description	Range
Transmission Speed	Set this item when change the transmission speed used for communication with the connected equipment. (Default: 19200bps)	4800bps, 9600bps, 19200bps, 38400bps, 57600bps, 115200bps
Data Bit	Set this item when change the data length used for communication with the connected equipment. (Default: 8bit)	8bit (fixed)
Stop Bit	Specify the stop bit length for communications. (Default: 1bit)	1bit (fixed)
Parity	Specify whether or not to perform a parity check, and how it is performed during communication. (Default: Odd)	Odd (fixed)
Retry	Set the number of retries to be performed when a communication error occurs. (Default: 0time)	0 to 5times
Timeout Time	Set the time period for a communication to time out. (Default: 3sec)	3 to 30sec
Delay Time	Set this item to adjust the transmission timing of the communication request from the GOT. (Default: 0ms)	0 to 300 (ms)

(3) AJ71C24/UC24

Item	Description	Range
Transmission Speed	Set this item when change the transmission speed used for communication with the connected equipment. (Default: 19200bps)	4800bps, 9600bps, 19200bps
Data Bit	Set this item when change the data length used for communication with the connected equipment. (Default: 8bit)	8bit (fixed)
Stop Bit	Specify the stop bit length for communications. (Default: 1bit)	1bit (fixed)
Parity	Specify whether or not to perform a parity check, and how it is performed during communication. (Default: Odd)	Odd (fixed)
Retry	Set the number of retries to be performed when a communication error occurs. (Default: 0time)	0 to 5times
Timeout Time	Set the time period for a communication to time out. (Default: 3sec)	3 to 30sec
Delay Time	Set this item to adjust the transmission timing of the communication request from the GOT. (Default: 0ms)	0 to 300 (ms)

POINT

(1) Communication interface setting by Utility

The communication interface setting can be changed on the Utility's [Communication setting] after writing [Communication Settings] of project data.

For details on the Utility, refer to the following manual.

11. COMMUNICATION INTERFACE SETTING (COMMUNICATION SETTING)

(2) Precedence in communication settings

When settings are made by GT Designer3 or the Utility, the latest setting is effective.

HINT

Cutting the portion of multiple connection of the controller

By setting GOT internal device, GOT can cut the portion of multiple connection of the controller. For example, faulty station that has communication timeout can be cut from the system.

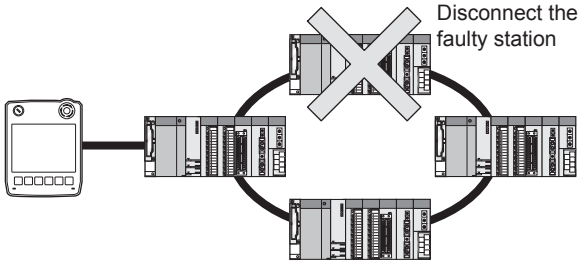

For details of the setting contents of GOT internal device, refer to the following manual.

GT Designer3 Version☐ Screen Design Manual (Fundamentals)

22.5 PLC Side Setting

The GOT operates under the following transmission specifications when it is connected to a Mitsubishi PLC in the computer link connection.

Transmission specifications	Settings
Data bit	8bits
Parity bit	Yes (Odd)
Stop Bit	1bit
Sum Check	Enable
Transmission speed	Set the same transmission speed on both the GOT and the PLC.

The PLC side settings (the serial communication module, computer link module) are explained in Section 22.5.2 to Section 22.5.4.

Model		Refer to
Serial communication module (MELSEC iQ-R Series)	RJ71C24, RJ71C24-R2, RJ71C24-R4	22.5.1
Serial communication module (Q Series)	QJ71C24N, QJ71C24	22.5.2
	QJ71C24N-R2, QJ71C24-R2	
	QJ71C24N-R4	
Modem interface module	QJ71CMO, QJ71CMON	22.5.2
Serial communication module (L Series)	LJ71C24, LJ71C24-R2	22.5.2
Serial communication module (QnA Series)	AJ71QC24N, AJ71QC24	22.5.3
	AJ71QC24N-R2, AJ71QC24-R2	
	AJ71QC24N-R4, AJ71QC24-R4	
	A1SJ71QC24N1, A1SJ71QC24N, A1SJ71QC24	
	A1SJ71QC24N1-R2, A1SJ71QC24N-R2, A1SJ71QC24-R2	
Computer link module	AJ71UC24	22.5.4
	A1SJ71UC24-R2, A1SJ71UC24-PRF, A1SJ71C24-R2, A1SJ71C24-PRF	22.5.4
	A1SJ71UC24-R4, A1SJ71C24-R4	22.5.4
	A1SCPUC24-R2	22.5.4
	A2CCPUC24, A2CCPUC24-PRF	22.5.4

22.5.1 Connecting serial communication module (MELSEC iQ-R Series)

POINT

Serial communication module (MELSEC iQ-R Series)

For details of the serial communication module (MELSEC iQ-R Series), refer to the following manual.

Manuals of MELSEC iQ-R Series

■ [Module parameter] of GX Works3

The PLC can communicate with the GOT with the default module parameter setting.

(1) Module parameter

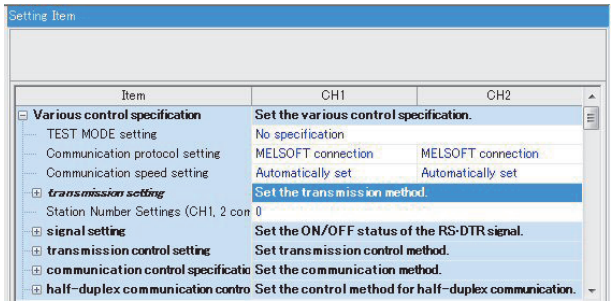

POINT

(1) When changing the module parameter
After writing module parameters to the PLC CPU, turn the PLC CPU OFF then back ON again, or reset the PLC CPU.

(2) Connection of multiple GOTs
To some serial communication module models, two GOTs can be connected using both CH1 and CH2.

22.5.2 Connecting serial communication module (Q, L Series)

POINT

(1) Serial communication module (Q, L Series)
For details of the serial communication module (Q, L Series), refer to the following manual.

☞ Q Corresponding Serial Communication Module User's Manual (Basic)

☞ MELSEC-L Serial Communication Module User's Manual (Basic)

(2) Modem interface module
For details of the modem interface module, refer to the following manual.

☞ Modem Interface Module User's Manual

■ [Intelligent function module switch setting] on GX Developer

[Intelligent function module switch setting] on GX Developer is not necessary. (When no [Intelligent function module switch setting] is made, the module runs in the GX Developer connection mode.)
A module can be also connected to a GOT by making the following [Intelligent function module switch setting] on GX Developer.

(1) When connecting to the CH1 side

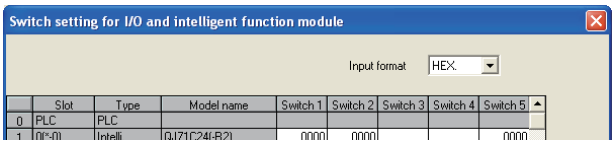

Switch No.	Bit		Description			Set value *3
	Position	Specified value				
Switch 1	b0	OFF	CH1 transmission settings*1	Operation setting	(Operates according to the GOT side specifications.)	0000H
	b1	OFF		Data bit		
	b2	OFF		Parity bit		
	b3	OFF		Even/odd parity		
	b4	OFF		Stop Bit		
	b5	OFF		Sum check code		
	b6	OFF		Write during RUN		
	b7	OFF		Setting modifications		
	b8 to b15	-	CH1 transmission speed setting*2			
Switch 2	-		CH1 Communication protocol setting		GX Developer connection	0000H
Switch 5	-		Station number setting		0th station	0000H

(2) When connecting to the CH2 side

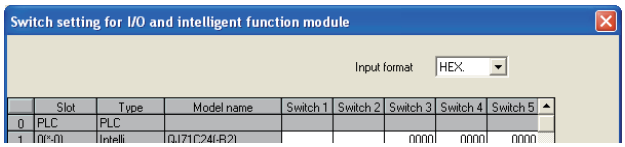

Switch No.	Bit		Description			Set value *3
	Position	Specified value				
Switch 3	b0	OFF	CH2 transmission settings*1	Operation setting	(Operates according to the GOT side specifications.)	0000H
	b1	OFF		Data bit		
	b2	OFF		Parity bit		
	b3	OFF		Even/odd parity		
	b4	OFF		Stop Bit		
	b5	OFF		Sum check code		
	b6	OFF		Write during RUN		
	b7	OFF		Setting modifications		
	b8 to b15	-	CH2 transmission speed setting*2			
Switch 4	-		CH2 Communication protocol setting		GX Developer connection	0000H
Switch 5	-		Station number setting		0th station	0000H

*1 The module operates under the following transmission specifications.

Transmission specifications	Settings
Operation setting	Independent
Data bit	8bits
Parity bit	Enable
Even/odd parity	Odd
Stop Bit	1bit
Sum check code	Enable

*2 The serial communication module operates at the transmission speed set on the GOT.

*3 When the value of switch setting is other than "0", the setting of [Format] and [Transmission Speed] on the GOT side are required to be changed.

☞ 22.4.2 Communication detail settings

POINT

(1) When the [Intelligent function module switch setting] has been set
After writing PLC parameters to the PLC CPU, turn the PLC CPU OFF then back ON again, or reset the PLC CPU.

(2) Connection of multiple GOTs
To some serial communication module models, two GOTs can be connected using both CH1 and CH2.

Controller Type	Connection of 2 GOTs	
	Function version A	Function version B
QJ71C24(-R2)	△	○
QJ71C24N(-R2/R4)	-	○
LJ71C24(-R2)	○	-

○: 2 GOTs connectable, △: 1 GOT connectable, -: Not applicable

(3) When connecting to the modem interface module
When the modem interface module is connected, only CH2 can be used.

22.5.3 Connecting serial communication module (QnA Series)

POINT

Serial communication module (QnA Series)

For details of the serial communication module (QnA Series), refer to the following manual.

Serial Communication Module User's Manual (Modem Function Additional Version)

■ Switch setting on serial communication module

Set the Station number switches, the Mode switch for the channel used for GOT connection, and the Transmission specifications switches.

AJ71QC24N, AJ71QC24N-R2, AJ71QC24N-R4, AJ71QC24, AJ71QC24-R2, AJ71QC24-R4

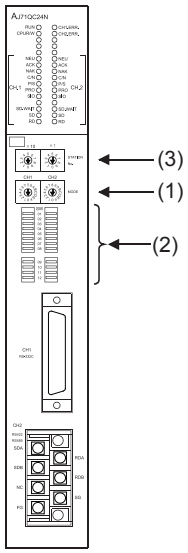

A1SJ71QC24N1, A1SJ71QC24N1-R2, A1SJ71QC24N, A1SJ71QC24N-R2, A1SJ71QC24, A1SJ71QC24-R2

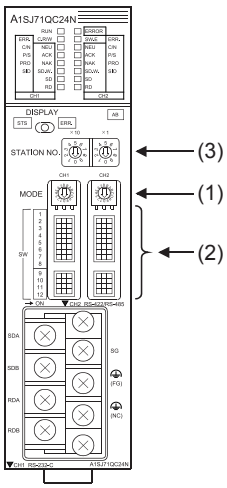

(1) Mode setting switch

Mode setting switch*1	Description	Set value
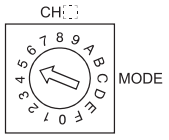	Dedicated protocol (Format 5) (Binary code)	5

*1 The mode switch in the figure is for the AJ71QC24 (N) (-R2/R4).

POINT

When connecting a GOT to CH2

Set the CH1 side mode switch to any other than "0" (interlocked operation).

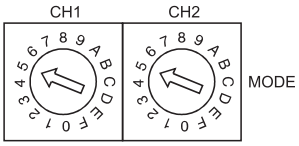

(2) Transmission specifications setting switch

Transmission specifications switch Switch	Setting Switch	Description		Set value
AJ71QC24(N) (-R2/R4) 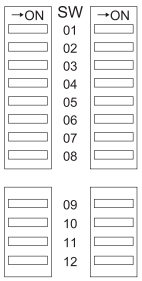 A1SJ71QC24(N) (N1)(-R2)*1 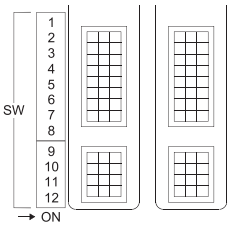	SW01	Operation setting	Independent operation	OFF
	SW02	Data bit setting	8bits	ON
	SW03	Parity bit setting	Set	ON
	SW04	Even/odd parity setting	Odd	OFF
	SW05	Stop bit setting	1bit	OFF
	SW06	Sum check setting	Set	ON
	SW07	Write during RUN enabled/ disabled setting	Enabled	ON
	SW08	Setting change enable/disable	Disable (prohibit)	OFF
	SW09 to SW12	Transmission speed setting	(Consistent with the GOT side specifications.)	See (a)
	SW13 to SW15	-	The switch is located on the left side of the module. (only on AJ71QC24 (-R2/R4))	All OFF

*1 The following shows the layout of switches in the case of the following hardware versions for the module.
Switch settings and switch ON/OFF directions are the same.

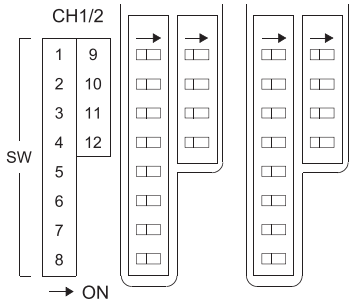

Target unit	Hardware version
A1SJ71QC24	Version E hardware or earlier
A1SJ71QC24-R2	Version D hardware or earlier
A1SJ71QC24N, A1SJ71QC24N-R2	Version A hardware

(a) Transmission speed setting (SW09 to SW12)
Set the transmission speed (SW09 to SW12) as follows.
The transmission speed setting must be consistent with that of the GOT side.

Setting Switch	Transmission speed*1*2*3					
	4800 bps	9600 bps	19200 bps	38400 bps*4	57600 bps*4	115200 bps*4
SW09	OFF	ON	OFF	ON	OFF	ON
SW10	OFF	OFF	ON	ON	ON	ON
SW11	ON	ON	ON	ON	OFF	OFF
SW12	OFF	OFF	OFF	OFF	ON	ON

*1 Only transmission speeds available on the GOT side are shown.

*2 When the software version of AJ71QC24 (-R2/R4) and A1SJ71QC24 (-R2) is "L" or earlier, and when 2 devices are connected to the two interfaces individually, make the setting so that the total transmission speed of the two interfaces is within 19200bps.
When the total transmission speed of the two interfaces is within 19200bps, a controller other than GOT can be connected to the computer link module.
When only one device is connected to either of the interfaces, a maximum transmission speed of 19200bps can be set to the one where the device is connected. In this instance, set SW09 to SW12 to "OFF" on the other side.

*3 When 3 devices are connected to the two interfaces individually in the case of AJ71QC24N(-R2/R4), A1SJ71QC24N(-R2), and A1SJ71QC24N1(-R2), make the setting so that the total transmission speed of the two interfaces is within 115200bps (within 230400bps in the case of A1SJ71QC24N1(-R2)).
When the total transmission speed of the two interfaces is within 115200bps (within 230400bps in the case of A1SJ71QC24N1(-R2)), a controller other than GOT can be connected to the computer link module.
When only one device is connected to either of the interfaces, a maximum transmission speed of 115200bps can be set to the one where the device is connected. In this instance, set SW09 to SW12 to "OFF" on the other side.

*4 This can be set only in the case of AJ71QC24N (-R2/R4), A1SJ71QC24N (-R2) or A1SJ71QC24N1 (-R2).

(3) Station number switch (for both CH1 and CH2)

Station number switch*5	Description	Set value
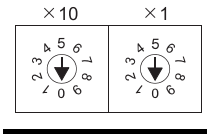	Set the station number of the serial communication module to which an access is made from the GOT.	0

*5 The station number switch in the figure is for the AJ71QC24 (N) (-R2/R4).

POINT

When the switch setting has been changed

Turn the PLC CPU OFF then ON again, or reset the PLC CPU.

22.5.4 Connecting computer link module

POINT

Computer link module

For details of the computer link module, refer to the following manual.

Computer Link Module (Com. link func./Print. func.) User's Manual

■ Switch setting on the computer link module

Set the Mode setting switch, the Transmission specifications switches and the Station number setting switches.

AJ71UC24

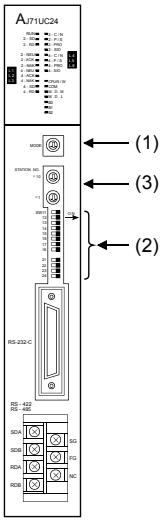

A1SJ71UC24-R2, A1SJ71UC24-PRF, A1SJ71UC24-R2, A1SJ71C24-PRF

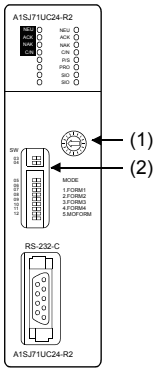

A1SJ71UC24-R4, A1SJ71C24-R4

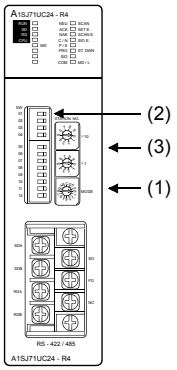

A1SCPUC24-R2

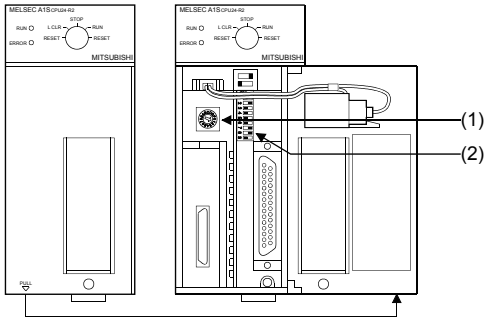

When the cover is open

A2CCPUC24, A2CCPUC24-PRF

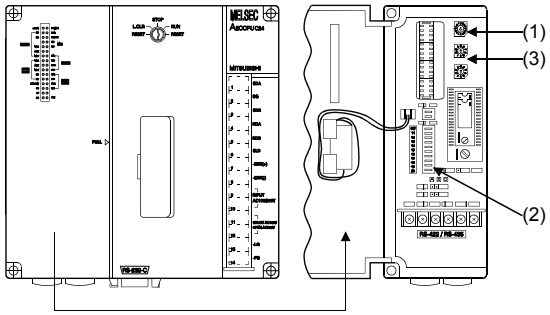

When the cover is open

(1) Mode setting switch

Mode setting switch	Description		Set value
	Dedicated protocol Format 1	RS-232 connection	1
		RS-422 connection	5

(2) Transmission specifications setting switch

(a) AJ71UC24

Transmission specifications setting switch	Setting switch	Description		Set value
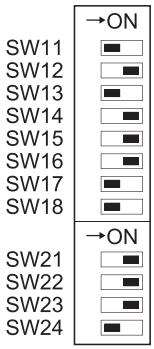	SW11	Main channel setting	RS-232 connection	OFF
			RS-422 connection	ON
	SW12	Data bit setting	8bits	ON
	SW13	Transmission speed setting	(Consistent with the GOT side specifications.)	See descriptions below.
	SW14			
	SW15			
	SW16	Parity bit setting	Set	ON
	SW17	Even/odd parity setting	Odd	OFF
	SW18	Stop bit setting	1bit	OFF
	SW21	Sum check setting	Set	ON
	SW22	Write during RUN enabled/disabled setting	Enabled	ON
	SW23	Computer link/Multidrop selection	Computer link	ON
	SW24	Master station/Local station setting	(Setting ignored)	OFF

- Transmission speed setting (SW13 to SW15)

  Set the transmission speed (SW13 to SW15) as follows.

  The transmission speed setting must be consistent with that of the GOT side.

Setting switch	Transmission speed*1		
	4800bps	9600bps	19200bps
SW13	OFF	ON	OFF
SW14	OFF	OFF	ON
SW15	ON	ON	ON

*1 Only transmission speeds available on the GOT side are shown.

(b) A1SJ71UC24-R2, A1SJ71UC24-PRF, A1SJ71C24-R2, A1SJ71C24-PRF

Transmission specifications setting switch	Setting switch	Description		Set value
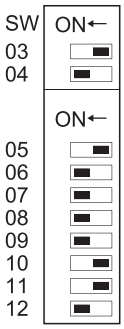	SW03	Unused	-	OFF
	SW04	Write during RUN enabled/disabled setting	Enabled	ON
	SW05	Transmission speed setting	(Consistent with the GOT side specifications.)	See descriptions below.
	SW06			
	SW07			
	SW08	Data bit setting	8bits	ON
	SW09	Parity bit setting	Set	ON
	SW10	Even/odd parity setting	Odd	OFF
	SW11	Stop bit setting	1bit	OFF
	SW12	Sum check setting	Set	ON

• Transmission speed setting (SW05 to SW07)
Set the transmission speed (SW05 to SW07) as follows.
The transmission speed setting must be consistent with that of the GOT side.

Setting switch	Transmission speed*1		
	4800bps	9600bps	19200bps
SW05	OFF	ON	OFF
SW06	OFF	OFF	ON
SW07	ON	ON	ON

*1 Only transmission speeds available on the GOT side are shown.

(c) A1SJ71UC24-R4, A1SJ71C24-R4

Transmission specifications switch Switch	Setting Switch	Description		Set value
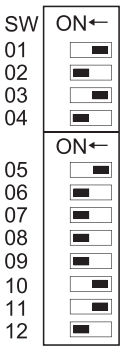	SW01	Master station/Local station setting	(Setting ignored)	OFF
	SW02	Computer link/Multidrop selection	Computer link	ON
	SW03	Unused	-	OFF
	SW04	Write during RUN enabled/disabled setting	Enabled	ON
	SW05	Transmission speed setting	(Consistent with the GOT side specifications.)	See descriptions below.
	SW06			
	SW07			
	SW08	Data bit setting	8bits	ON
	SW09	Parity bit setting	Set	ON
	SW10	Even/odd parity setting	Odd	OFF
	SW11	Stop bit setting	1bit	OFF
	SW12	Sum check setting	Set	ON

• Transmission speed setting (SW05 to SW07)
Set the transmission speed (SW05 to SW07) as follows.
The transmission speed setting must be consistent with that of the GOT side.

Setting switch	Transmission speed*1		
	4800bps	9600bps	19200bps
SW05	OFF	ON	OFF
SW06	OFF	OFF	ON
SW07	ON	ON	ON

*1 Only transmission speeds available on the GOT side are shown.

(d) A1SCPUC24-R2

Transmission specifications setting switch	Setting switch	Description		Set value
	1	Write during RUN enabled/disabled setting	Enabled	ON
	2	Transmission speed setting	(Consistent with the GOT side specifications.)	See descriptions below.
	3			
	4			
	5	Data bit setting	8bits	ON
	6	Parity bit setting	Set	ON
	7	Even/odd parity setting	Odd	OFF
	8	Stop bit setting	1bit	OFF
	9	Sum check setting	Set	ON

• Transmission speed setting (2 to 4)
Set the transmission speed (2 to 4) as follows.
The transmission speed setting must be consistent with that of the GOT side.

Setting switch	Transmission speed*2		
	4800bps	9600bps	19200bps
2	OFF	ON	OFF
3	OFF	OFF	ON
4	ON	ON	ON

*2 Only transmission speeds available on the GOT side are shown.

(e) A2CCPUC24, A2CCPUC24-PRF

Transmission specifications setting switch	Setting switch	Description		Set value
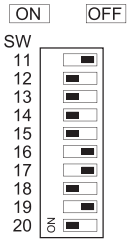	SW11	Transmission speed setting	(Consistent with the GOT side specifications.)	See descriptions below.
	SW12			
	SW13			
	SW14	Data bit setting	8bits	ON
	SW15	Parity bit setting	Set	ON
	SW16	Even/odd parity setting	Odd	OFF
	SW17	Stop bit setting	1bit	OFF
	SW18	Sum check setting	Set	ON
	SW19	Main channel setting	RS-232	OFF
	SW20	Write during RUN enabled/disabled setting	Enabled	ON

• Transmission speed setting (SW11 to SW13)
Set the transmission speed (SW11 to SW13) as follows.
The transmission speed setting must be consistent with that of the GOT side.

Setting switch	Transmission speed*1		
	4800bps	9600bps	19200bps
SW11	OFF	ON	OFF
SW12	OFF	OFF	ON
SW13	ON	ON	ON

*1 Only transmission speeds available on the GOT side are shown.

(3) Station number setting switch

Station number switch*2	Description	Set value
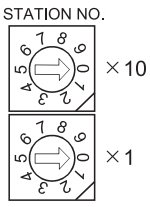	Set the station number of the computer link module to which an access is made from the GOT.	0

*2 The station number setting switch in the figure is for the A1SJ71UC24-R4.

POINT

When the switch setting has been changed
Turn the PLC CPU OFF then ON again, or reset the PLC CPU.

22.6 Precautions

■ Time taken until the PLC runs when connected in the multiple CPU system

The following time is taken until the PLC runs.
QCPU (Q mode), motion controller CPU (Q series): 10 seconds or more

MELDAS C70: 18 seconds or more

When the GOT starts before the PLC runs, a system alarm occurs. Adjust the opening screen time in the GOT setup so that no system alarm occurs.

☞ GT Designer3 Version1 Screen Design Manual

■ Connection to LCPU

LCPU may diagnose (check file system, recovering process, etc.) the SD memory card when turning on the power or when resetting.
Therefore, it takes time until the SD memory card becomes available. When the GOT starts before the SD card becomes available, a system alarm occurs. Adjust the opening screen time in the GOT setup so that no system alarm occurs.

☞ GT Designer3 Version1 Screen Design Manual

■ When monitoring the Q170MCPU

Set [CPU No.] to "2" in the device setting to monitor the device of the Motion CPU area (CPU No.2).

When the CPU No. is set to "0" or "1", the device on the PLC CPU area (CPU No.1) is monitored.

When the CPU No. is set to the number other than "0" to "2", a communication error occurs and the monitoring cannot be executed.

For setting the CPU No., refer to the following manual.

☞ GT Designer3 Version1 Screen Design Manual

Example) Setting dialog box of the bit device

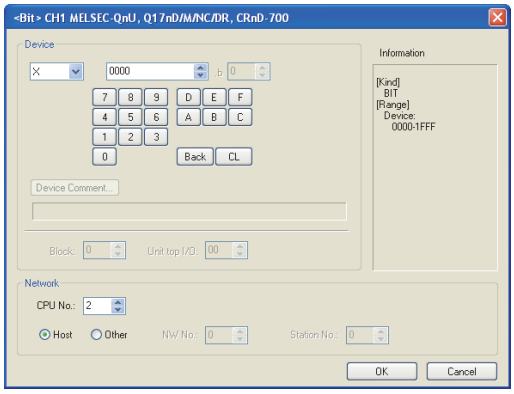

■ Connection to RnSFCPU

The RnSFCPU takes 10 seconds or more to run.
If the GOT is started before the RnSFCPU runs, a system alarm occurs.
To prevent a system alarm from occurring, adjust the title display time in the [GOT Setup] dialog.

☞ GT Designer3 Version☐ Screen Design Manual

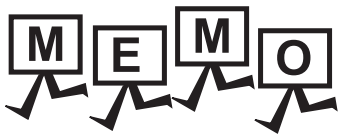
MEMO

23. ETHERNET CONNECTION

23.1 Connectable Model List

23.1.1 PLC/Motion controller CPU

The following table shows the connectable models.

Series	Model	Clock	Communication type	GT14 Handy	Refer to
MELSEC iQ-R Series	R04CPU	○	Ethernet	○	23.2.1 23.2.2
	R08CPU				
	R16CPU				
	R32CPU				
	R120CPU				
	R08PCPU				
	R16PCPU				
	R32PCPU				
	R120PCPU				
	R04ENCPU				
	R08ENCPU				
	R16ENCPU				
	R32ENCPU				
	R120ENCPU				
	R08SFCPU*1				
	R16SFCPU*1				
	R32SFCPU*1				
	R120SFCPU*1				
Motion controller CPU (MELSEC iQ-R Series)	R16MTCPU	○	Ethernet	○	23.2.1 23.2.2
	R32MTCPU				
C Controller module (MELSEC iQ-R Series)	R12CCPU-V	○	Ethernet	○	23.2.2
MELSEC iQ-F Series	FX5U FX5UC	○	Ethernet	○	23.2.1 23.2.2

(Continued to next page)

*1 Mount a safety function module R6SFM next to the RnSFCPU on the base unit. The RnSFCPU and the safety function module R6SFM must have the same pair version. If their pair versions differ, the RnSFCPU does not operate.

Series	Model	Clock	Communication type	GT14 Handy	Refer to
MELSEC-Q (Q mode)	Q00JCPU	○	Ethernet	○	23.2.1
	Q00CPU*1				
	Q01CPU*1				
	Q02CPU*1				
	Q02HCPU*1 Q06HCPU*1 Q12HCPU*1 Q25HCPU*1				
	Q02PHCPU Q06PHCPU Q12PHCPU Q25PHCPU				
	Q12PRHCPU (Main base)				
	Q25PRHCPU (Main base)				
	Q12PRHCPU (Extension base)				
	Q25PRHCPU (Extension base)				
	Q00UJCPU Q00UCPU Q01UCPU Q02UCPU Q03UDCPU				
	Q04UDHCPU Q06UDHCPU Q10UDHCPU Q13UDHCPU Q20UDHCPU Q26UDHCPU				
	Q03UDECPU Q04UDEHCPU Q06UDEHCPU Q10UDEHCPU Q13UDEHCPU Q20UDEHCPU Q26UDEHCPU Q50UDEHCPU Q100UDEHCPU	○	Ethernet	○	23.2.1 23.2.2
	Q03UDVCPU Q04UDVCPU Q06UDVCPU Q13UDVCPU Q26UDVCPU				
C Controller module (Q Series)	Q12DCCPU-V*3 Q24DHCCPU-V/VG Q24DHCCPU-LS Q26DHCCPU-LS	○	Ethernet	○	23.2.2
MELSEC-QS	QS001CPU	○	Ethernet	×	23.2.1
MELSEC-L	L02CPU L06CPU L26CPU L26CPU-BT L02CPU-P L06CPU-P L26CPU-P L26CPU-PBT L02SCPU L02SCPU-P	○	Ethernet	○	23.2.1 23.2.2
MELSEC-Q (A mode)	Q02CPU-A Q02HCPU-A Q06HCPU-A	○	Ethernet	○	23.2.1
MELSEC-QnA (QnACPU)	Q2ACPU Q2ACPU-S1 Q3ACPU Q4ACPU Q4ARCPU	○	Ethernet	○*2	23.2.1
MELSEC-QnA (QnASCPU)	Q2ASCPU Q2ASCPU-S1 Q2ASHCPU Q2ASHCPU-S1	○	Ethernet	○*2	23.2.1
MELSEC-A (AnCPU)	A2UCPU A2UCPU-S1 A3UCPU A4UCPU A2ACPU A2ACPUP21 A2ACPUR21 A2ACPU-S1 A2ACPUP21-S1 A2ACPUR21-S1 A3ACPU A3ACPUP21 A3ACPUR21 A1NCPU A1NCPUP21 A1NCPUR21	○	Ethernet	○	23.2.1

(Continued to next page)

*1 For the multiple CPU system configuration, use CPU function version B or later.

*2 If the A series Ethernet module is applied to the QnACPU, the GOT can monitor the devices as the same as the case of AnACPU.
However, the following devices cannot be monitored.
- Devices added to QnACPU
- Latch relays (L) and step relays (S)
  (In case of QnACPU, the latch relay (L) and step relay (S) are different from the internal relay (M). However, whichever is specified, an access is made to the internal relay.)
- File register (R)

*3 Use only modules with the upper five digits of the serial No. later than 12042.

Series	Model	Clock	Communication type	GT14 Handy	Refer to
MELSEC-A (AnCPU)	A2NCPU	○	Ethernet	○	23.2.1
	A2NCPUP21				
	A2NCPUR21				
	A2NCPU-S1				
	A2NCPUP21-S1				
	A2NCPUR21-S1				
	A3NCPU				
	A3NCPUP21				
	A3NCPUR21				
MELSEC-A (AnSCPU)	A2USCPU	○	Ethernet	○	23.2.1
	A2USCPU-S1				
	A2USHCPU-S1				
	A1SCPU				
	A1SCPUC24-R2				
	A1SHCPU				
	A2SCPU				
	A2SHCPU				
	A1SJCPU				
	A1SJCPU-S3				
	A1SJHCPU				
MELSEC-A	A0J2HCPU	×	Ethernet	○	23.2.1
	A0J2HCPUP21				
	A0J2HCPUR21				
	A0J2HCPU-DC24				
	A2CCPU	○	-	×	-
	A2CCPUP21				
	A2CCPUR21				
	A2CCPUC24				
	A2CCPUC24-PRF				
	A2CJCPU-S3				
	A1FXCPU				
Motion controller CPU (Q Series)	Q172CPU*1*2	○	Ethernet	○	23.2.1
	Q173CPU*1*2				
	Q172CPUN*1				
	Q173CPUN*1				
	Q172HCPU				
	Q173HCPU				
	Q172DCPU				
	Q173DCPU				
	Q172DCPU-S1	○	Ethernet	○	23.2.1 23.2.5
	Q173DCPU-S1				
	Q172DSCPU				
	Q173DSCPU				
	Q170MCPU*3				
	Q170MSCPU*6				
	Q170MSCPU-S1*6				
Motion controller CPU (A Series)	A273UCPU	○	Ethernet	○	23.2.1
	A273UHCPU				
	A273UHCPU-S3				
	A373UCPU				
	A373UCPU-S3				
	A171SCPU				
	A171SCPU-S3				
	A171SCPU-S3N				
	A273UCPU				
	A273UHCPU				
Motion controller CPU (A Series)	A171SHCPU	○	Ethernet	○	23.2.1
	A171SHCPUN				
	A172SHCPU				
	A172SHCPUN				
	A173UHCPU				
	A173UHCPU-S1				
MELSEC-WS	WS0-CPU0	×	-	×	-
	WS0-CPU1				
	WS0-CPU3				
MELSECNET/H remote I/O station	QJ72LP25-25	×	Ethernet	○	23.2.1
	QJ72LP25G				
	QJ72BR15				
CC-Link IE Field Network head module	LJ72GF15-T2	×	-	×	-
CC-Link IE field network Ethernet adapter module	NZ2GF-ETB	×	Ethernet	○	23.2.4
CNC C70	Q173NCCPU	○	Ethernet	○	23.2.3
Robot controller	CRnQ-700 (Q172DRCPU) CR750-Q (Q172DRCPU) CR751-Q (Q172DRCPU)	○	Ethernet*4	○	23.2.1
MELSEC-FX	FX_0, FX_{0S}, FX_{0N} FX_1, FX_2, FX_{2C}	×	-	×	-
	FX_{1S}, FX_{1N}, FX_{2N}, FX_{1NC}	○	-	×	
	FX_{2NC}	×	-	×	
	FX_{3S}*5 $FX_{3G(C)}$*5 FX_{3GE} $FX_{3U(C)}$*5	○	Ethernet	○	23.2.1

*1 When using SV13, SV22, or SV43, use the motion controller CPU on which any of the following main OS version is installed.
- SW6RN-SV13Q□: 00H or later
- SW6RN-SV22Q□: 00H or later
- SW6RN-SV43Q□: 00B or later

*2 Use main modules with the following product numbers.
- Q172CPU: Product number N******* or later
- Q173CPU: Product number M******* or later

*3 When using Ethernet module, only the first step can be used on the extension base unit (Q52B/Q55B).

*4 The Ethernet connection of robot controller can be established only via the Ethernet module (QJ71E71) or Built-in Ethernet port of QnUDE.

*5 The supported version of the main units varies depending on the Ethernet module to be used as shown below.

FX series	Ethernet module	
	FX_{3U}-ENET-ADP	FX_{3U}-ENET-L
$FX_{3U(C)}$	Ver. 3.10 or later	Ver. 2.21 or later
$FX_{3G(C)}$	Ver. 2.00 or later	FX_{3U}-ENET-L is not supported.
FX_{3S}	Ver. 1.00 or later	

*6 When using Ethernet module, the extension base unit (Q5□B/Q6□B) can be used.

23.1.2 Ethernet module

CPU series	Ethernet module[*1]			
MELSEC iQ-R Series Motion controller CPU (MELSEC iQ-R Series) C Controller module[*2] (MELSEC iQ-R Series)	RJ71EN71			
MELSEC-Q (Q mode), MELSEC-QS Motion controller CPU (Q Series) CNC C70 Robot controller (CRnQ-700)	QJ71E71-100	QJ71E71-B5	QJ71E71-B2	QJ71E71
MELSEC-QnA	AJ71QE71N3-T AJ71QE71N-B5T A1SJ71QE71N-B5 A1SJ71QE71-B5	AJ71QE71N-B5 AJ71QE71 A1SJ71QE71N-B2 A1SJ71QE71-B2	AJ71QE71N-B2 AJ71QE71-B5 A1SJ71QE71N-T	AJ71QE71N-T A1SJ71QE71N3-T A1SJ71QE71N-B5T
MELSEC-Q (A mode) MELSEC-A Motion controller CPU (A Series)	AJ71E71N3-T AJ71E71N-B5T A1SJ71E71N-B2 A1SJ71E71-B2-S3	AJ71E71N-B5 AJ71E71-S3 A1SJ71E71N-T	AJ71E71N-B2 A1SJ71E71N3-T A1SJ71E71N-B5T	AJ71E71N-T A1SJ71E71N-B5 A1SJ71E71-B5-S3
MELSEC-FX	FX3U-ENET-L	FX3U-ENET-ADP		
CC-Link IE field Network Ethernet adapter module	NZ2GF-ETB			
MELSEC-L	LJ71E71-100			

*1 If the A series Ethernet module is applied to the QnACPU, the GOT can monitor the devices as the same as the case of AnACPU. However, the following devices cannot be monitored.
- Devices added to QnACPU
- Latch relays (L) and step relays (S)
  (In case of QnACPU, the latch relay (L) and step relay (S) are different from the internal relay (M). However, whichever is specified, an access is made to the internal relay.)
- File register (R)

*2 Connect the GOT to the Ethernet module controlled by the RCPU of another CPU on the multiple CPU.

23.2 System Configuration

23.2.1 Connecting to Ethernet module

■ When connecting to MELSEC iQ-R Series, Motion controller CPU (MELSEC iQ-R Series), C Controller module (MELSEC iQ-R Series), MELSEC-Q, QS, QnA, A or motion controller

(1) When using the connector conversion box

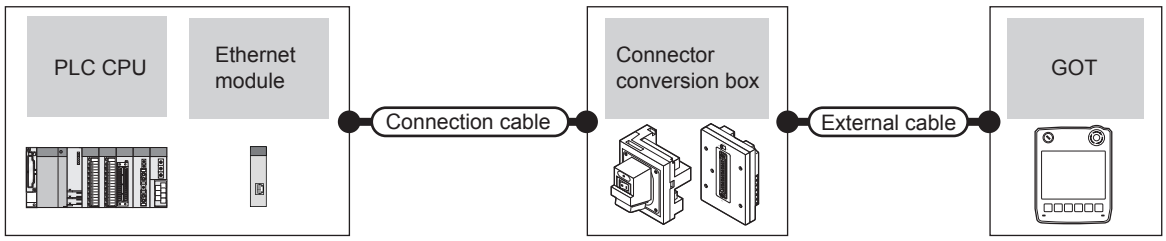

PLC			Connection cable*1	Connector conversion box	External cable*7	GOT model	Maximum segment length	Number of connectable equipment
Model	Ethernet module *3*4	Communication type	Cable model					
MELSEC iQ-R Series*4 Motion controller CPU*4 (MELSEC iQ-R Series)	RJ71EN71	Ethernet	• 10BASE-T Shielded twisted pair cable (STP) or Unshielded twisted pair cable (UTP) Category 3, 4, and 5 • 100BASE-TX Shielded twisted pair cable (STP) Category 5 and 5e	GT16H-CNB-42S	GT14H-C30-42P(3m) GT14H-C60-42P(6m) GT14H-C100-42P(10m)	GT14 Handy	100m*2	128 GOTs*6 (recommended to 16 units or less)
				GT16H-CNB-37S	GT11H-C30-37P (3m) GT11H-C60-37P (6m) GT11H-C100-37P(10m)			
MELSEC-Q (Q mode) MELSEC-QS Motion controller CPU (Q Series)*5	QJ71E71-100 QJ71E71-B5 QJ71E71-B2 QJ71E71			GT16H-CNB-42S	GT14H-C30-42P(3m) GT14H-C60-42P(6m) GT14H-C100-42P(10m)			
				GT16H-CNB-37S	GT11H-C30-37P (3m) GT11H-C60-37P (6m) GT11H-C100-37P(10m)			
MELSEC-QnA	AJ71QE71N3-T AJ71QE71N-B5 AJ71QE71N-B2 AJ71QE71N-T AJ71QE71N-B5T AJ71QE71 AJ71QE71-B5 A1SJ71QE71N3-T A1SJ71QE71N-B5 A1SJ71QE71N-B2 A1SJ71QE71N-T A1SJ71QE71N-B5T A1SJ71QE71-B5 A1SJ71QE71-B2			GT16H-CNB-42S	GT14H-C30-42P(3m) GT14H-C60-42P(6m) GT14H-C100-42P(10m)			
				GT16H-CNB-37S	GT11H-C30-37P (3m) GT11H-C60-37P (6m) GT11H-C100-37P(10m)			

PLC			Connection cable*1	Connector conversion box	External cable*7	GOT model	Maximum segment length	Number of connectable equipment
Model	Ethernet module *3*4	Communication type	Cable model					
MELSEC-A MELSEC-Q (A mode) Motion controller CPU (A Series)	AJ71E71N3-T AJ71E71N-B5 AJ71E71N-B2 AJ71E71N-T AJ71E71N-B5T AJ71E71-S3 A1SJ71E71N3-T A1SJ71E71N-B5 A1SJ71E71N-B2 A1SJ71E71N-T A1SJ71E71N-B5T A1SJ71E71-B5-S3 A1SJ71E71-B2-S3	Ethernet	• 10BASE-T Shielded twisted pair cable (STP) or Unshielded twisted pair cable (UTP) Category 3, 4, and 5 • 100BASE-TX Shielded twisted pair cable (STP) Category 5 and 5e	GT16H-CNB-42S	GT14H-C30-42P(3m) GT14H-C60-42P(6m) GT14H-C100-42P(10m)	GT14 Handy	100m*2	128 GOTs*6 (recommended to 16 units or less)
				GT16H-CNB-37S	GT11H-C30-37P (3m) GT11H-C60-37P (6m) GT11H-C100-37P(10m)			
MELSEC-L	LJ71E71-100			GT16H-CNB-42S	GT14H-C30-42P(3m) GT14H-C60-42P(6m) GT14H-C100-42P(10m)			
				GT16H-CNB-37S	GT11H-C30-37P (3m) GT11H-C60-37P (6m) GT11H-C100-37P(10m)			

*1 The destination connected with the twisted pair cable varies with the configuration of the applicable Ethernet network system.
Connect to the Ethernet module, hub, transceiver, wireless LAN adapter (such as NZ2WL-JPA and NZ2WL-JPS), or other system equipment corresponding to the applicable Ethernet network system.
Use cables, connectors, and hubs that meet the IEEE802.3 10BASE-T/100BASE-TX standard.
A cross cable is available for connecting the GOT to the Ethernet module.
The use of shielded twisted pair cable (STP) is recommended in environments in which the performance against noise is required.
For the controllers that allow the connection of a wireless LAN adapter and the setting method of wireless LAN adapters, refer to the manual of the wireless LAN adapter to be used.

*2 A length between a hub and a node.
The maximum distance differs depending on the Ethernet device to be used.
The following shows the number of the connectable nodes when a repeater hub is used.
- 10BASE-T: Max. 4 nodes for a cascade connection (500m)
- 100BASE-TX: Max. 2 nodes for a cascade connection (205m)

When switching hubs are used, the cascade connection between the switching hubs has no logical limit for the number of cascades.
For the limit, contact the switching hub manufacturer.

*3 For the system configuration of the Ethernet module, refer to the following manuals.

Q Corresponding Ethernet Interface Module User's Manual (Basic)
For QnA Ethernet Interface Module User's Manual
For A Ethernet Interface Module User's Manual

*4 Select one of the following [Type] in [Ethernet setting] of GT Designer3.
- Ethernet module (MELSEC iQ-R Series): RJ71EN71
- Ethernet module (Q Series): QJ71E71
- Ethernet module (QnA Series): AJ71QE71
- Ethernet module (A Series): AJ71E71

For [Ethernet] of GT Designer3, refer to the following.

23.3.3 Ethernet setting

*5 When using the PERIPHERAL I/F of Q170MCPU or Q17nDCPU-S1, refer to the following.

23.2.5 Connecting to PERIPHERAL I/F

*6 The number of connectable GOTs for one network is 63 units (at most).

*7 Use C or later version of GT11H-C□□-37P.

■ When connecting to MELSEC-FX

Communication driver
Ethernet(FX), Gateway

(2) When using the connector conversion box

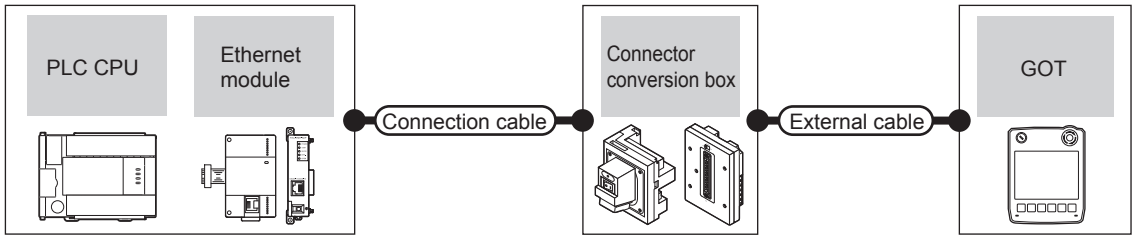

PLC			Connection cable*1	Connector conversion box	External cable*8	GOT model	Maximum segment length	Number of connectable equipment
Model	Ethernet module *3*4	Communication type	Cable model					
MELSEC-FX (FX3U)	FX3U-ENET-L	Ethernet	• 10BASE-T Shielded twisted pair cable (STP) or Unshielded twisted pair cable (UTP) Category 3, 4, and 5 • 100BASE-TX Shielded twisted pair cable (STP) Category 5 and 5e	GT16H-CNB-42S	GT14H-C30-42P(3m) GT14H-C60-42P(6m) GT14H-C100-42P(10m)	GT14 Handy	100m*2	2 GOTs
				GT16H-CNB-37S	GT11H-C30-37P (3m) GT11H-C60-37P (6m) GT11H-C100-37P(10m)			
MELSEC-FX (FX3UC)	FX3UC-1PS-5V, FX2NC-CNV-IF + FX3U-ENET-L*5			GT16H-CNB-42S	GT14H-C30-42P(3m) GT14H-C60-42P(6m) GT14H-C100-42P(10m)			
				GT16H-CNB-37S	GT11H-C30-37P (3m) GT11H-C60-37P (6m) GT11H-C100-37P(10m)			
MELSEC-FX (FX3U)	FX3U-CNV-BD, FX3U-422-BD, FX3U-232-BD, + FX3U-ENET-ADP*6*7	Ethernet	• 10BASE-T Shielded twisted pair cable (STP) or Unshielded twisted pair cable (UTP) Category 3, 4, and 5 • 100BASE-TX Shielded twisted pair cable (STP) Category 5 and 5e	GT16H-CNB-42S	GT14H-C30-42P(3m) GT14H-C60-42P(6m) GT14H-C100-42P(10m)	GT14 Handy	100m*2	4 GOTs
				GT16H-CNB-37S	GT11H-C30-37P (3m) GT11H-C60-37P (6m) GT11H-C100-37P(10m)			
MELSEC-FX (FX3UC)	FX3U-ENET-ADP			GT16H-CNB-42S	GT14H-C30-42P(3m) GT14H-C60-42P(6m) GT14H-C100-42P(10m)			
				GT16H-CNB-37S	GT11H-C30-37P (3m) GT11H-C60-37P (6m) GT11H-C100-37P(10m)			
MELSEC-FX (FX3G)	FX3G-CNV-ADP + FX3U-ENET-ADP*7			GT16H-CNB-42S	GT14H-C30-42P(3m) GT14H-C60-42P(6m) GT14H-C100-42P(10m)			
				GT16H-CNB-37S	GT11H-C30-37P (3m) GT11H-C60-37P (6m) GT11H-C100-37P(10m)			
MELSEC-FX (FX3GC)	FX3U-ENET-ADP*7			GT16H-CNB-42S	GT14H-C30-42P(3m) GT14H-C60-42P(6m) GT14H-C100-42P(10m)			
				GT16H-CNB-37S	GT11H-C30-37P (3m) GT11H-C60-37P (6m) GT11H-C100-37P(10m)			
MELSEC-FX (FX3S)	FX3S-CNV-ADP + FX3U-ENET-ADP*7			GT16H-CNB-42S	GT14H-C30-42P(3m) GT14H-C60-42P(6m) GT14H-C100-42P(10m)			
				GT16H-CNB-37S	GT11H-C30-37P (3m) GT11H-C60-37P (6m) GT11H-C100-37P(10m)			

*1 The destination connected with the twisted pair cable varies with the configuration of the applicable Ethernet network system. Connect to the Ethernet module, hub, transceiver or other system equipment corresponding to the applicable Ethernet network system.
Use cables, connectors, and hubs that meet the IEEE802.3 10BASE-T/100BASE-TX standard.
A cross cable is available for connecting the GOT to the Ethernet module.
The use of shielded twisted pair cable (STP) is recommended in environments in which the performance against noise is required.

*2 A length between a hub and a node.
The maximum distance differs depending on the Ethernet device to be used.

The following shows the number of the connectable nodes when a repeater hub is used.
- 10BASE-T: Max. 4 nodes for a cascade connection (500m)
- 100BASE-TX: Max. 2 nodes for a cascade connection (205m)

When switching hubs are used, the cascade connection between the switching hubs has no logical limit for the number of cascades.
For the limit, contact the switching hub manufacturer.

*3 For the system configuration of the Ethernet module, refer to the following manuals.

☞ For FX Ethernet Interface Module User's Manual

*4 Select one of the following [Type] in [Ethernet setting] of GT Designer3.
- Ethernet module (FX Series): FX

For [Ethernet] of GT Designer3, refer to the following.

☞ 23.3.3 Ethernet setting

*5 When using an Ethernet module with the FX3UC series, FX3UC-1PS-5V or FX2NC-CNV-IF is required.

*6 When using an Ethernet module with the FX3U series, FX3U-CNV-BD, FX3U-422-BD, or FX3U-232-BD is required.

*7 FX3U-ENET-ADP occupies one extension communication adapter CH (Max. 2 CHs) of the FX3U(C) or FX3G(C) and one extension communication adapter CH (Max. 1 CH) of the FX3S. One CPU allows the connection of only one FX3U-ENET-ADP.

*8 Use C or later version of GT11H-C□□-37P.

23.2.2 Connection to Built-in Ethernet port CPU or C controller module

Communication driver

Ethernet(MELSEC),Q17nNC,CRnD-700

(1) When using the connector conversion box

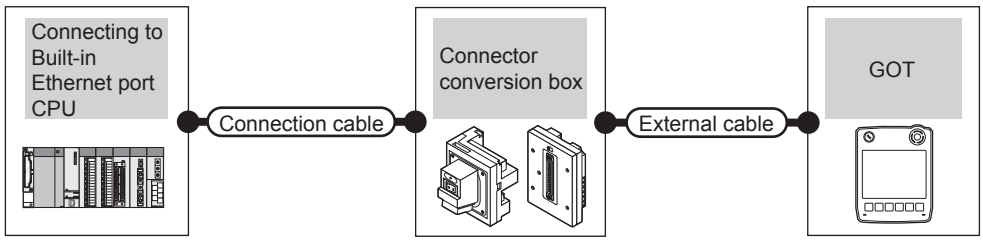

PLC		Connection cable*1*2	Connector conversion box	External cable*8	GOT model	Maximum segment length	Number of connectable equipment
Model	Communication type						
MELSEC iQ-R Series*9*10	Ethernet	• 10BASE-T Shielded twisted pair cable (STP) or Unshielded twisted pair cable (UTP) Category 3, 4, and 5 • 100BASE-TX Shielded twisted pair cable (STP) Category 5 and 5e	GT16H-CNB-42S	GT14H-C30-42P(3m) GT14H-C60-42P(6m) GT14H-C100-42P(10m)	GT14 Handy	100m*3	16 GOTs
			GT16H-CNB-37S	GT11H-C30-37P (3m) GT11H-C60-37P (6m) GT11H-C100-37P(10m)			
Motion controller CPU*9*10 (MELSEC iQ-R Series)			GT16H-CNB-42S	GT14H-C30-42P(3m) GT14H-C60-42P(6m) GT14H-C100-42P(10m)			
			GT16H-CNB-37S	GT11H-C30-37P (3m) GT11H-C60-37P (6m) GT11H-C100-37P(10m)			
MELSEC-QnUDE(H)*4*5 MELSEC-QnUD(P)V*4*5			GT16H-CNB-42S	GT14H-C30-42P(3m) GT14H-C60-42P(6m) GT14H-C100-42P(10m)			
			GT16H-CNB-37S	GT11H-C30-37P (3m) GT11H-C60-37P (6m) GT11H-C100-37P(10m)			
C Controller module (MELSEC iQ-R Series)			GT16H-CNB-42S	GT14H-C30-42P (3m) GT14H-C60-42P (6m) GT14H-C100-42P (10m)			
			GT16H-CNB-37S	GT11H-C30-37P (3m) GT11H-C60-37P (6m) GT11H-C100-37P (10m)			
C Controller module (Q Series)			GT16H-CNB-42S	GT14H-C30-42P(3m) GT14H-C60-42P(6m) GT14H-C100-42P(10m)			
			GT16H-CNB-37S	GT11H-C30-37P (3m) GT11H-C60-37P (6m) GT11H-C100-37P(10m)			
MELSEC-L*6*7			GT16H-CNB-42S	GT14H-C30-42P(3m) GT14H-C60-42P(6m) GT14H-C100-42P(10m)			
			GT16H-CNB-37S	GT11H-C30-37P (3m) GT11H-C60-37P (6m) GT11H-C100-37P(10m)			
MELSEC-FX (FX3GE)			GT16H-CNB-42S	GT14H-C30-42P(3m) GT14H-C60-42P(6m) GT14H-C100-42P(10m)			4 GOTs
			GT16H-CNB-37S	GT11H-C30-37P (3m) GT11H-C60-37P (6m) GT11H-C100-37P(10m)			
MELSEC iQ-F Series*11*12	Ethernet	• 100BASE-TX Shielded twisted pair cable (STP) of category 5 or higher • 10BASE-T Shielded twisted pair cable (STP) of category 3 or higher	GT16H-CNB-42S	GT14H-C30-42P (3m) GT14H-C60-42P (6m) GT14H-C100-42P (10m)	GT14 Handy	100m*3	8 GOTs
			GT16H-CNB-37S	GT11H-C30-37P (3m) GT11H-C60-37P (6m) GT11H-C100-37P (10m)			

*1 The destination connected with the twisted pair cable varies with the configuration of the applicable Ethernet network system.
Connect to the Ethernet module, hub, transceiver, wireless LAN adapter (such as NZ2WL-JPA and NZ2WL-JPS), or other system equipment corresponding to the applicable Ethernet network system.
Use cables, connectors, and hubs that meet the IEEE802.3 10BASE-T/100BASE-TX standard.
The use of shielded twisted pair cable (STP) is recommended in environments in which the performance against noise is required.
For the controllers that allow the connection of a wireless LAN adapter and the setting method of wireless LAN adapters, refer to the manual of the wireless LAN adapter to be used.

*2 A straight cable is available.
When connecting the GOT and CPU directly with Ethernet cable, a cross cable is also available.

*3 A length between a hub and a node.
The maximum distance differs depending on the Ethernet device to be used.
The following shows the number of the connectable nodes when a repeater hub is used.
- 10BASE-T: Max. 4 nodes for a cascade connection (500m)
- 100BASE-TX: Max. 2 nodes for a cascade connection (205m)

When switching hubs are used, the cascade connection between the switching hubs has no logical limit for the number of cascades.
For the limit, contact the switching hub manufacturer.

*4 For the system configuration of Built-in Ethernet port QCPU, refer to the following manual.

QCPU User's Manual (Hardware Design, Maintenance and Inspection)

*5 Select [QnUD(P)V/QnUDEH] for [Type] in [Ethernet] of GT Designer3.
For [Ethernet] of GT Designer3, refer to the following.

23.3.3 Ethernet setting

*6 For the system configuration of Built-in Ethernet port LCPU, refer to the following manual.

MELSEC-L CPU User's Manual (Built-In Ethernet Function)

*7 Select [LCPU] for [Controller Type] in [Ethernet] of GT Designer3.
For [Ethernet] of GT Designer3, refer to the following.

23.3.3 Ethernet setting

*8 Use C or later version of GT11H-C□□-37P.

*9 Select [RCPU] for [Controller Type] in [Ethernet] of GT Designer3.
For [Ethernet] of GT Designer3, refer to the following.

23.3.3 Ethernet setting

*10 For the system configuration of Built-in Ethernet port RCPU, refer to the following manual.

Manuals of MELSEC iQ-R Series

*11 Select [FX5CPU] for [Controller Type] in [Ethernet] of GT Designer3.
For [Ethernet] of GT Designer3, refer to the following.

23.3.3 Ethernet setting

*12 For the system configuration of MELSEC iQ-F series, refer to the following manual.

MELSEC iQ-F User's Manual

23.2.3 Connecting to Display I/F

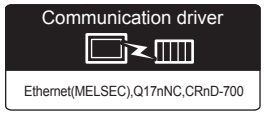

(1) When using the connector conversion box

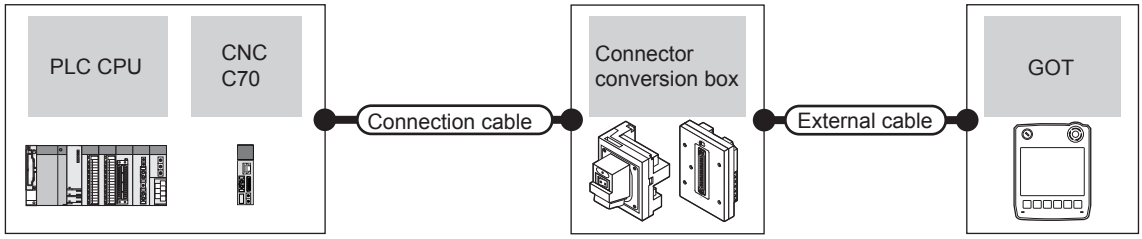

PLC		Connection cable*1	Connector conversion box	External cable*5	GOT model	Maximum segment length	Number of connectable equipment
Model	Communication type						
CNC C70 (Q173NCCPU) *3*4	Ethernet	• 10BASE-T Shielded twisted pair cable (STP) or Unshielded twisted pair cable (UTP) Category 3, 4, and 5 • 100BASE-TX Shielded twisted pair cable (STP) Category 5 and 5e	GT16H-CNB-42S	GT14H-C30-42P(3m) GT14H-C60-42P(6m) GT14H-C100-42P(10m)	GT14 Handy	100m*2	16 GOTs for 1 network
			GT16H-CNB-37S	GT11H-C30-37P (3m) GT11H-C60-37P (6m) GT11H-C100-37P(10m)			

*1 The destination connected with the twisted pair cable varies with the configuration of the applicable Ethernet network system.
Connect to the Ethernet module, hub, transceiver or other system equipment corresponding to the applicable Ethernet network system.
Use cables, connectors, and hubs that meet the IEEE802.3 10BASE-T/100BASE-TX standard.
The use of shielded twisted pair cable (STP) is recommended in environments in which the performance against noise is required.

*2 A length between a hub and a node.
The maximum distance differs depending on the Ethernet device to be used.
The following shows the number of the connectable nodes when a repeater hub is used.
- 10BASE-T: Max. 4 nodes for a cascade connection (500m)
- 100BASE-TX: Max. 2 nodes for a cascade connection (205m)

When switching hubs are used, the cascade connection between the switching hubs has no logical limit for the number of cascades.
For the limit, contact the switching hub manufacturer.

*3 For the system configuration of the CNC C70, refer to the following manual.

☞ C70 Series SET UP MANUAL

*4 Select [Q17nNC] for [Type] in [Ethernet] of GT Designer3.
For [Ethernet] of GT Designer3, refer to the following.

☞ 23.3.3 Ethernet setting

*5 Use C or later version of GT11H-C□□-37P.

23.2.4 Connecting to CC-Link IE Field Network Ethernet adapter module

Communication driver

Ethernet(MELSEC),Q17nNC,CRnD-700

(1) When using the connector conversion box

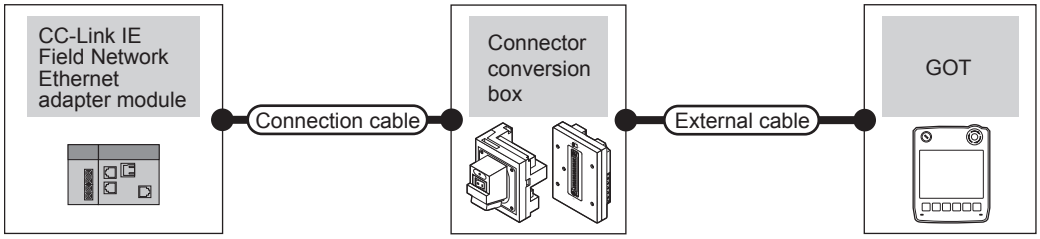

CC-Link IE field network Ethernet adapter module		Connection cable*1	Connector conversion box	External cable*6	GOT model	Maximum segment length	Number of connectable equipment
Model	Communication type						
NZ2GF-ETB *3*4	Ethernet	• 10BASE-T Shielded twisted pair cable (STP) or Unshielded twisted pair cable (UTP) Category 3, 4, and 5 • 100BASE-TX Shielded twisted pair cable (STP) Category 5 and 5e	GT16H-CNB-42S	GT14H-C30-42P(3m) GT14H-C60-42P(6m) GT14H-C100-42P(10m)	GT14 Handy	100m*2	128 GOTs*5 (recommended to 16 units or less)
			GT16H-CNB-37S	GT11H-C30-37P (3m) GT11H-C60-37P (6m) GT11H-C100-37P(10m)			

*1 The destination connected with the twisted pair cable varies with the configuration of the applicable Ethernet network system.
Connect to the Ethernet module, hub, transceiver, wireless LAN adapter (such as NZ2WL-JPA and NZ2WL-JPS), or other system equipment corresponding to the applicable Ethernet network system.
Use cables, connectors, and hubs that meet the IEEE802.3 10BASE-T/100BASE-TX standard.
The use of shielded twisted pair cable (STP) is recommended in environments in which the performance against noise is required.
For the controllers that allow the connection of a wireless LAN adapter and the setting method of wireless LAN adapters, refer to the manual of the wireless LAN adapter to be used.

*2 A length between a hub and a node.
The maximum distance differs depending on the Ethernet device to be used.
The following shows the number of the connectable nodes when a repeater hub is used.
- 10BASE-T: Max. 4 nodes for a cascade connection (500m)
- 100BASE-TX: Max. 2 nodes for a cascade connection (205m)

When switching hubs are used, the cascade connection between the switching hubs has no logical limit for the number of cascades.
For the limit, contact the switching hub manufacturer.

*3 For the system configuration on the CC-Link IE Field Network module, refer to the CC-Link IE Field Network Ethernet adapter module manual.

*4 Select [QJ71E71] for [Type] in [Ethernet] of GT Designer3.
For [Ethernet] of GT Designer3, refer to the following.

23.3.3 Ethernet setting

*5 The number of connectable GOTs for one network is 63 units (at most).

*6 Use sub-version C or later for GT11H-C□□-37P.

23.2.5 Connecting to PERIPHERAL I/F

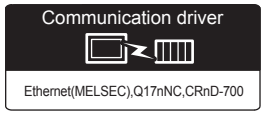

(1) When using the connector conversion box

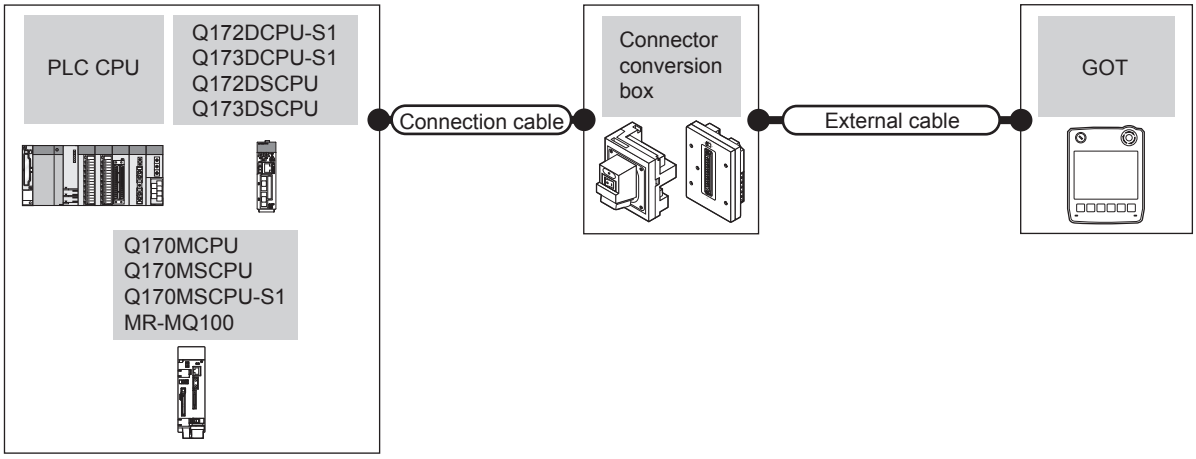

PLC*2		Connection cable*1	Connector conversion box	External cable*3	GOT model	Total distance	Number of connectable equipment
Model	Communication type						
Motion controller CPU (Q Series) Q172DCPU-S1 Q173DCPU-S1 Q172DSCPU Q173DSCPU Q170MCPU Q170MSCPU Q170MSCPU-S1	Ethernet	• 10BASE-T Shielded twisted pair cable (STP) or Unshielded twisted pair cable (UTP) Category 3, 4, and 5 • 100BASE-TX Shielded twisted pair cable (STP) Category 5 and 5e	GT16H-CNB-42S	GT14H-C30-42P(3m) GT14H-C60-42P(6m) GT14H-C100-42P(10m)	GT14 Handy	30m	16 GOTs for 1 network
			GT16H-CNB-37S	GT11H-C30-37P (3m) GT11H-C60-37P (6m) GT11H-C100-37P(10m)			

*1 The destination connected with the twisted pair cable varies with the configuration of the applicable Ethernet network system. Connect to the Ethernet module, hub, transceiver or other system equipment corresponding to the applicable Ethernet network system.
Use cables, connectors, and hubs that meet the IEEE802.3 10BASE-T/100BASE-TX standard.
The use of shielded twisted pair cable (STP) is recommended in environments in which the performance against noise is required.
When connecting the GOT and CPU directly with Ethernet cable, a cross cable is also available.

*2 When using the peripheral I/F of Q170MCPU or Q17nDCPU-S1, set as shown below.
- Use the GT Designer3 Version1.12N or later.
- Use [Ethernet(MELSEC), Q17nNC, CRnD-700(Gateway)] for the communication driver.
- Select [QnUDE(H)] for [Controller Type] in [Ethernet] of GT Designer3.
  For [Ethernet] of GT Designer3, refer to the following.

23.3.3 Ethernet setting

*3 Use sub-version C or later for GT11H-C□□-37P.

23.3 GOT Side Settings

23.3.1 Setting communication interface (Communication settings)

Set the channel of the connected equipment.

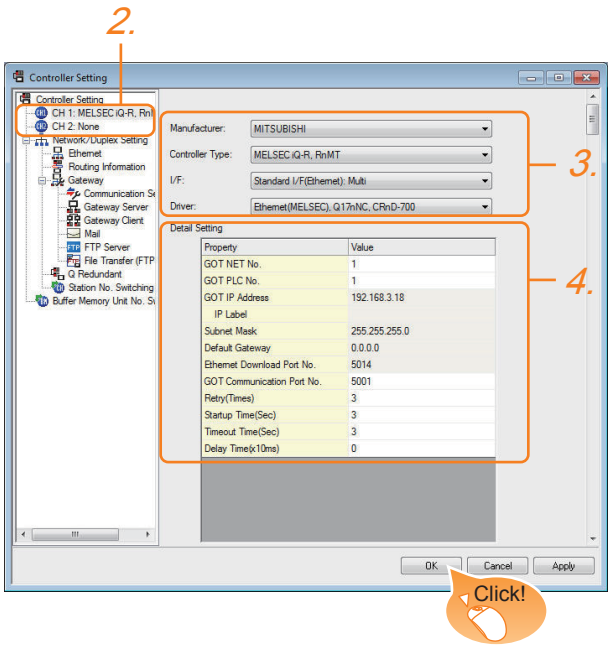

1. Select [Common] → [Controller Setting] from the menu.
2. The Controller Setting window is displayed. Select the channel to be used from the list menu.
3. Set the following items.
   - Manufacturer: Mitsubishi
   - Controller Type: Set according to the Controller Type to be connected.
   - I/F: Interface to be used
   - Driver:
     Ethernet(MELSEC), Q17nNC, CRnD-700
     Ethernet(FX), Gateway
4. The detailed setting is displayed after Manufacturer, Controller Type, I/F, and Driver are set.
   Make the settings according to the usage environment.
   ☞ 23.3.2 Communication detail settings

Click the [OK] button when settings are completed.

POINT

The settings of connecting equipment can be confirmed in [I/F Communication Setting].
For details, refer to the following.
☞ 18.1.2 I/F communication setting

23.3.2 Communication detail settings

Make the settings according to the usage environment.

Item	Description	Range
GOT NET No.	Set the network No. of the GOT. (Default: 1)	1 to 239
GOT PLC No.*3	Set the station No. of the GOT. (Default: 1)	1 to 120*4
GOT IP Address*2	Set the IP address of the GOT. (Default: 192.168.3.18)	0.0.0.0 to 255.255.255.255
Subnet Mask*2	Set the subnet mask for the sub network. (Only for connection via router) If the sub network is not used, the default value is set. (Default:255.255.255.0)	0.0.0.0 to 255.255.255.255
Default Gateway*2	Set the router address of the default gateway where the GOT is connected. (Only for connection via router) (Default: 0.0.0.0)	0.0.0.0 to 255.255.255.255
Ethernet Download Port No.*2	Set the GOT port No. for Ethernet download. (Default: 5014)	1024 to 5010, 5014 to 65534 (Except for 5011, 5012, 5013, and 49153)
GOT Communication Port No.	Set the GOT port No. for the connection with the Ethernet module. • For Ethernet (MELSEC), Q17nNC, and CRnD-700 (Default: 5001) • Ethernet (FX), Gateway (Default: 5019)	1024 to 5010, 5014 to 65534 (Except for 5011, 5012, 5013, and 49153)
Retry	Set the number of retries to be performed when a communication timeout occurs. When receiving no response after retries, the communication times out. (Default: 3times)	0 to 5times
Startup Time	Specify the time period from the GOT startup until GOT starts the communication with the PLC CPU. (Default: 3sec)	3 to 255 sec
Timeout Time*1	Set the time period for a communication to time out. (Default: 3sec)	3 to 90sec
Delay Time	Set the delay time for reducing the load of the network/destination PLC. (Default: 0ms)	0 to 10000 (× 10 ms)

*1 To connect the GOT with the Ethernet module (Q Series) in the one-on-one relationship using a cross cable, set [Timeout Time] to 6 sec. or longer.

*2 Click the [Setting] button and perform the setting in the [GOT IP Address Setting] screen.

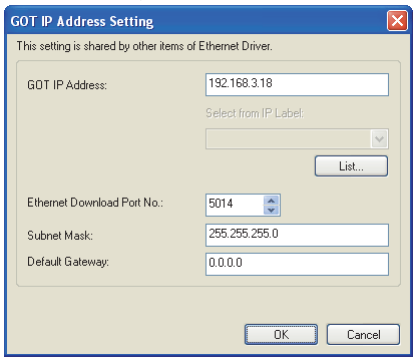

*3 Each of [GOT PLC No.] set in the communication detail setting and [PLC No.] set in the Ethernet setting must be set to different station numbers. ☞ 23.3.3 Ethernet setting

*4 When the drive is [Ethernet(FX), Gateway] , the range is 1 to 64.

POINT

(1) Example of [Detail setting].
For examples of [Detail Setting], refer to the following.

23.4 PLC Side Setting

(2) Communication interface setting by Utility
The communication interface setting can be changed on the Utility's [Communication setting] after writing [Communication Settings] of project data.
For details on the Utility, refer to the following manual.

11. COMMUNICATION INTERFACE SETTING (COMMUNICATION SETTING)

(3) Precedence in communication settings
When settings are made by GT Designer3 or the Utility, the latest setting is effective.

23.3.3 Ethernet setting

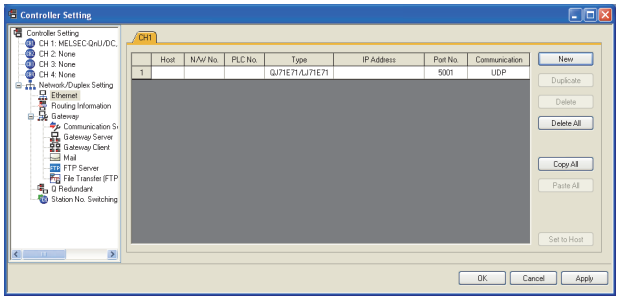

Item	Description	Range
Host	The host is displayed. (The host is indicated with an asterisk (*).)	-
N/W No.	Set the network No. of the connected Ethernet module. (Default: blank)	1 to 239
PLC No.*4	Set the station No. of the connected Ethernet module. (Default: blank)	1 to 120*5
Type*1	Set the type of the connected Ethernet module. (Default: QJ71E71)	RCPU, RnCCPU, FX5CPU, QnUD(P)V/QnUDEH, QnD(H)CCPU, LCPU, Q17nNC, RJ71EN71, QJ71E71/LJ71E71, AJ71QE71, AJ71E71 FX
IP Address	Set the IP address of the connected Ethernet module. (Default: blank)	0.0.0.0 to 255.255.255.255
Port No.*2	Set the port No. of the connected Ethernet module. (Default: 5001)	1024 to 65534
Communication*3	UDP	UDP, TCP

*1 Select one of the following [Controller Type].
- Built-in Ethernet port (hereafter CPU): RCPU RnMTCPU, RnPCPU
- Connection to Built-in Ethernet port QCPU: QnUD(P)V/ QnUDEH
- C Controller module (Q Series): QnD(H)CCPU
- Connection to Built-in Ethernet port LCPU: LCPU
- Ethernet module (NZ2GF-ETB): QJ71E71
- Q17nNCCPU: Q17nNC
- Ethernet module (MELSEC iQ-R Series): RJ71EN71
- Ethernet module (Q, L Series): QJ71E71/LJ71E71
- Ethernet module (QnA Series): AJ71QE71
- Ethernet module (A Series): AJ71E71
- Ethernet module (FX Series): FX
- Built-in Ethernet port FXCPU: FX

For the applicable Ethernet module, refer to the following.

23.2 System Configuration

*2 Set only when selecting [AJ71E71] in [Controller Type]. When other than [AJ71E71] is selected, the port No. is as follows.
- [RCPU], [RnCCPU], [QnUDE(H)]: 5006 (fixed)
- [FX5CPU]: 5562 (fixed)
- [RJ71EN71], [Q17nNC], [QJ71E71], [AJ71QE71]: 5001 (fixed)
- [FX]: 5551 (When using FX3U-ENET-L)
  5556 (When using FX3U-ENET-ADP)
  When using built-in Ethernet port FXCPU: 5556

*3 When selecting the FX in [Controller Type], the communication type is the TCP (fixed).

*4 Each of [GOT PLC No.] set in the communication detail setting and [PLC No.] set in the Ethernet setting must be set to different station numbers.

23.3.2 Communication detail settings

*5 When selecting other than RCPU and RJ71EN71, the range is 1 to 64.

POINT

(1) Example of [Ethernet]
For examples of [Ethernet], refer to the following.

23.4 PLC Side Setting

(2) Parameter reflection function of MELSOFT Navigator
(a) The color of the cells for the items which are reflected to GT Designer3 from MELSOFT Navigator changes to green. Set items, which are displayed in green cells, from the MELSOFT Navigator.
(b) When the settings of N/W No., PLC No., type or IP address are reflected to the parameter from the MELSOFT Navigator, those settings are added. Items set in advance are not deleted. However, if the combination of the N/W No. and the PLC No. or the IP address overlaps, the item set in advance is overwritten.

23.3.4 Routing parameter setting

Up to 64 [Transfer Network No.]s can be set.

However, the same transfer network number cannot be set twice or more (multiple times).

Therefore, the one that can access to other station from the request source host GOT is 64 kinds of [Transfer Network No.]s.

POINT

Routing parameter setting

When communicating within the host network, routing parameter setting is unnecessary.
For details of routing parameters, refer to the following manual.

Q Corresponding Ethernet Interface Module User's Manual (Application)

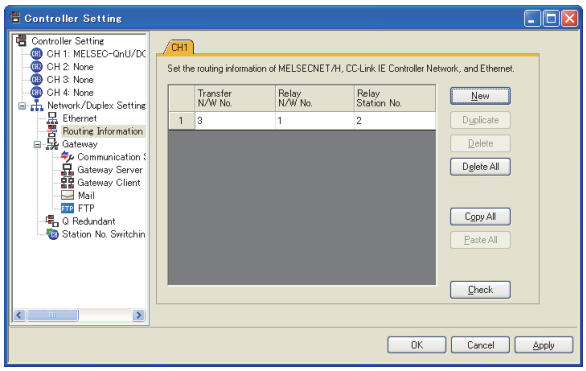

Item	Range
Target network No.	1 to 239
Relay Network No.*1	1 to 239
Relay Station No.*1	1 to 64

*1 When accessing to other networks relaying a Build-in Ethernet port CPU, set the virtual network No. and PLC No. set in the Ethernet settings on GT Designer3.

POINT

(1) Routing parameter setting of relay station
Routing parameter setting is also necessary for the relay station.
For the setting, refer to the following.

23.4 PLC Side Setting

(2) Parameter reflection function of MELSOFT Navigator

(a) The color of the cells for the items which are reflected to GT Designer3 from MELSOFT Navigator changes to green. Set items, which are displayed in green cells, from the MELSOFT Navigator.

(b) When the settings of Transfer network No., Relay network No. or Relay station No. are reflected to the parameter from the MELSOFT Navigator, those settings are added. Items set in advance are not deleted. However, if the target network No. overlaps, the item set in advance is overwritten.

(c) The routing information is used manually by the user when the data is created. Therefore, after changing the network configuration by MELSOFT Navigator, create a routing information again. For details of the creation of the routing information, refer to the MELSOFT Navigator help.

23.4 PLC Side Setting

Model		Refer to
Built-in Ethernet port RCPU	R04CPU, R08CPU R16CPU, R32CPU R120CPU, R16MTCPU, R32MTCPU R08PCPU, R16PCPU R32PCPU, R120PCPU R04ENCPU, R08ENCPU, R16ENCPU, R32ENCPU, R120ENCPU R08SFCPU, R16SFCPU, R32SFCPU, R120SFCPU	23.4.1 23.4.2
C Controller module (MELSEC iQ-R series)	R12CCPU-V	23.4.4
Built-in Ethernet port (MELSEC iQ-F series)	FX5U FX5UC	23.4.1 23.4.2
Connecting to Built-in Ethernet port QCPU	Q03UDECPU, Q04UDEHCPU, Q06UDEHCPU, Q10UDEHCPU, Q13UDEHCPU, Q20UDEHCPU, Q26UDEHCPU, Q50UDEHCPU Q100UDEHCPU, Q03UDVCPU, Q04UDVCPU Q06UDVCPU, Q13UDVCPU Q26UDVCPU Q172DSCPU, Q173DSCPU Q172DCPU-S1, Q173DCPU-S1 Q170MCPU Q170MSCPU, Q170MSCPU-S1	23.4.5 23.4.6 23.4.15
C Controller module	Q12DCCPU-V Q24DHCCPU-V/VG Q24DHCCPU-LS Q26DHCCPU-LS	23.4.8
Built-in Ethernet port LCPU	L02CPU, L06CPU, L26CPU, L26CPU-BT, L02CPU-P, L06CPU-P, L26CPU-P, L26CPU-PBT	23.4.5 23.4.6
Ethernet module (MELSEC iQ-R Series)	RJ71EN71	23.4.3
Ethernet module (Q Series)	QJ71E71-100, QJ71E71-B5, QJ71E71-B2, QJ71E71	23.4.7
Ethernet module (L Series)	LJ71E71-100	
Ethernet module (QnA Series)	AJ71QE71N3-T, AJ71QE71N-B5, AJ71QE71N-B2, AJ71QE71N-T, AJ71QE71N-B5T, AJ71QE71, AJ71QE71-B5, A1SJ71QE71N3-T, A1SJ71QE71N-B5, A1SJ71QE71N-B2, A1SJ71QE71N-T, A1SJ71QE71N-B5T, A1SJ71QE71-B5, A1SJ71QE71-B2	23.4.9
Ethernet module (A Series)	AJ71E71N3-T, AJ71E71N-B5, AJ71E71N-B2, AJ71E71N-T, AJ71E71N-B5T, AJ71E71-S3, A1SJ71E71N3-T, A1SJ71E71N-B5, A1SJ71E71N-B2, A1SJ71E71N-T, A1SJ71E71N-B5T, A1SJ71E71-B5-S3, A1SJ71E71-B2-S3	23.4.10
Ethernet module (FX Series)	FX3U-ENET-L, FX3U-ENET-ADP	23.4.11
Built-in Ethernet port FXCPU	FX3GE	23.4.12
CNC C70	Q173NCCPU	23.4.13
CC-Link IE Field Network Ethernet adapter module	NZ2GF-ETB	23.4.14
CC-Link IE Field Network Ethernet adapter module	QJ71GF11-T2	23.4.15

23.4.1 Connecting to Built-in Ethernet port CPU (one-to one connection)

This section describes the settings of the GOT and Built-in Ethernet port CPU in the following case of system configuration.

POINT

Built-in Ethernet port CPU

For details of Built-in Ethernet port CPU, refer to the following manual.

Manuals of MELSEC iQ-R Series
Manuals of MELSEC iQ-F Series

■ System configuration

For connecting one Built-in Ethernet port CPU to one GOT, the PLC side settings are not required. Set [Ethernet] for [Controller Setting] on GT Designer3, and then connect Built-in Ethernet port CPU to the GOT. (For MELSEC iQ-R Series)

■ [Controller Setting] and [Ethernet] of GT Designer3

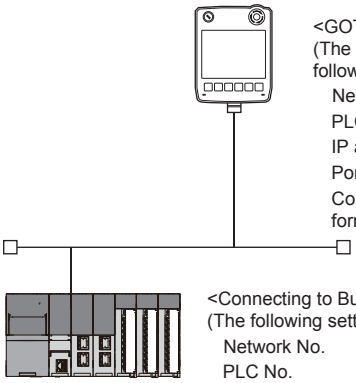

<GOT>
(The settings other than the following are set to the default)
Network No. : 1
PLC No. : 1
IP address : 192.168.3.1
Port No. : 5001
Communication format : UDP (fixed)

<Connecting to Built-in Ethernet port CPU>*1
(The following settings are set to the default)
Network No. : 1 (virtual)*2
PLC No. : 2 (virtual)*2
IP address : 192.168.3.39
Port No. : 5006 (fixed)
Communication format : UDP (fixed)

*1 For the settings when using system devices including a hub and a transceiver, refer to the following.

23.4.6 Connecting to Built-in Ethernet port CPU (multiple connection)

*2 These setting items do not exist at the PLC side. However, the virtual values must be set on the GOT side.

■ [Controller Setting] and [Ethernet] of GT Designer3

■ [Controller Setting] and [Ethernet] of GT Designer3

POINT

(1) [Controller Setting] and [Ethernet] of GT Designer3
For [Controller Setting] and [Ethernet] of GT Designer3, refer to the following.

23.3.1 Setting communication interface (Communication settings)

(2) Ethernet setting
When connecting Built-in Ethernet port RCPU to a GOT, the setting items for the network No. and station No. do not exist at the PLC side. However, these virtual values must be set on the GOT side. Therefore, set the network No. and station No. Set the network No. that does not exist on the network system and any station No.

(1) Controller setting

Item	Set value (Use default value)
GOT NET No.	1
GOT PLC No.	1
GOT IP Address	192.168.3.1
GOT Port No. (Communication)	5001
GOT Port No. (Ethernet Download)	5014
Default Gateway	0.0.0.0
Subnet Mask	255.255.255.0
Retry	3times
Startup Time	3sec
Timeout Time	3sec
Delay Time	0ms

(2) Ethernet setting

Item		Set value
Ethernet setting No.1	Host	*
	N/W No.	1*1
	PLC No.	2*2
	Type	RCPU*3
	IP address	192.168.3.39
	Port No.	5006 (fixed)*4
	Communication	UDP (fixed)*5

*1 Set the same value as that of GOT N/W No.
*2 Set a value different from that of GOT PLC No.
*3 In the case of MELSEC iQ-F series, it is FX5CPU.
*4 In the case of MELSEC iQ-F series, it is 5562 (fixed).
*5 In the case of MELSEC iQ-F series, it is TCP (fixed).

■ Checking communication state of Built-in Ethernet port CPU

(1) When using the Command Prompt of Windows®.
Execute a Ping command at the Command Prompt of Windows®.

(a) When normal communication
C:\>Ping 192.168.3.39
Reply from 192.168.3.39: bytes=32 time <10ms TTL=32

(b) When abnormal communication
C:\>Ping 192.168.3.39
Request timed out.

(2) When abnormal communication
At abnormal communication, check the following and execute the Ping command again.
- Cable connecting condition
- Confirmation of switch and network parameter setting
- Operation state of PLC CPU (faulty or not)
- The IP address of Built-in Ethernet port CPU specified in the ping command

POINT

Ethernet diagnostics of GX Works3

Ethernet diagnostics of GX Works3 is available to a Ping test from the PLC.
For details of Ethernet diagnostics of GX Works3, refer to the following manual.

Manuals of MELSEC iQ-R Series
Manuals of MELSEC iQ-F Series

23.4.2 Connecting to Built-in Ethernet port CPU (multiple connection)

This section describes the settings of the GOT and Built-in Ethernet port CPU in the following case of system configuration.

POINT

Built-in Ethernet port CPU

For details of Built-in Ethernet port CPU, refer to the following manual.

Manuals of MELSEC iQ-R Series
Manuals of MELSEC iQ-F Series

■ System configuration

(For MELSEC iQ-R Series)

■ [Controller Setting] and [Ethernet] of GT Designer3

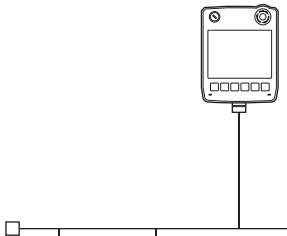

<GOT>
(The settings other than the following are set to the default)
Network No. : 1
PLC No. : 1
IP address : 192.168.0.18
Port No. : 5001
Communication format : UDP(fixed)

1 <Connecting to Built-in Ethernet port CPU>
(The settings other than the following are set to the default)
Network No. : 1 (virtual) *1
PLC No. : 2 (virtual) *1
IP address : 192.168.0.1
Port No. : 5006(fixed)
Communication format : UDP(fixed)

2 <Connecting to Built-in Ethernet port CPU>
(The settings other than the following are set to the default)
Network No. : 1 (virtual) *1
PLC No. : 3 (virtual) *1
IP address : 192.168.0.2
Port No. : 5006(fixed)
Communication format : UDP(fixed)

■ [Module parameter] of GX Works3

*1 These setting items do not exist at the PLC side. However, the virtual values must be set on the GOT side.

■ [Controller Setting] and [Ethernet] of GT Designer3

■ [Module parameter] of GX Works3

(1) Built-in Ethernet port
(For MELSEC iQ-R Series)

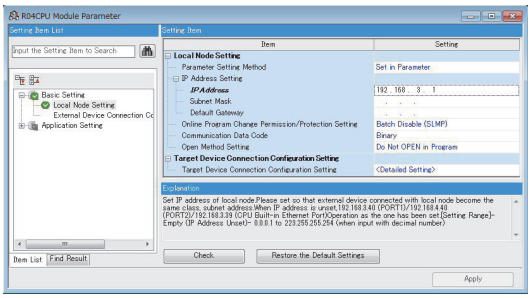

Item	Set value	Setting necessity at GOT connection
IP Address	192.168.0.1	×
Subnet Mask	-	×
Default Gateway	-	×
Online Program Change Permission/Protection Setting	(Use default value)	△
Communication Data Code		△
Open Method Setting		△
Target Device Connection Configuration Setting	-	×

○: Necessary △: As necessary ×: Not necessary

■ [Controller Setting] and [Ethernet] of GT Designer3

POINT

(1) [Controller Setting] and [Ethernet] of GT Designer3
For [Controller Setting] and [Ethernet] of GT Designer3, refer to the following.

☞ 23.3.1 Setting communication interface (Communication settings)

(2) Ethernet setting
When connecting Built-in Ethernet port CPU to a GOT, the setting items for the network No. and station No. do not exist at the PLC side. However, these virtual values must be set on the GOT side. Therefore, set the network No. and station No. Set the network No. that does not exist on the network system and any station No.

(1) Controller setting

Item	Set value (Use default value)
GOT NET No.	1
GOT PLC No.	1
GOT IP Address	192.168.0.18
GOT Port No. (Communication)	5001
GOT Port No. (Ethernet Download)	5014
Default Gateway	0.0.0.0
Subnet Mask	255.255.255.0
Retry	3times
Startup Time	3sec
Timeout Time	3sec
Delay Time	0ms

(2) Ethernet setting

Item		Set value	
		1	2
Ethernet setting No.1	Host	*	-
	N/W No.	1*1	1*1
	PLC No.	2*2	3*2
	Type	RCPU*3	RCPU*3
	IP address	192.168.0.1	192.168.0.2
	Port No.	5006 (fixed)*4	5006 (fixed)*4
	Communication	UDP (fixed)*5	UDP (fixed)*5

*1 Set the same value as that of GOT N/W No.
*2 Set a value different from that of the GOT PLC No. and the PLC No. of other PLCs on the same network.
*3 In the case of MELSEC iQ-F series, it is FX5CPU.
*4 In the case of MELSEC iQ-F series, it is 5562 (fixed).
*5 In the case of MELSEC iQ-F series, it is TCP (fixed).

■ Checking communication state of Built-in Ethernet port CPU

(1) When using the Command Prompt of Windows®.
Execute a Ping command at the Command Prompt of Windows®.

(a) When normal communication
C:\>Ping 192.168.0.1
Reply from 192.168.0.1: bytes=32 time <10ms TTL=32

(b) When abnormal communication
C:\>Ping 192.168.0.1
Request timed out.

(2) When abnormal communication
At abnormal communication, check the following and execute the Ping command again.
- Cable connecting condition
- Confirmation of switch and network parameter setting
- Operation state of PLC CPU (faulty or not)
- The IP address of Built-in Ethernet port CPU specified in the ping command

POINT

Ethernet diagnostics of GX Works3

Ethernet diagnostics of GX Works3 is available to a Ping test from the PLC.
For details of Ethernet diagnostics of GX Works3, refer to the following manual.

Manuals of MELSEC iQ-R Series

23.4.3 Connecting to Ethernet module (MELSEC iQ-R Series)

This section describes the settings of the GOT and Ethernet module (MELSEC iQ-R Series) in the following case of the system configuration.

POINT

Ethernet module (MELSEC iQ-R Series)

For details of the Ethernet module (MELSEC iQ-R Series), refer to the following manual.

Manuals of MELSEC iQ-R Series

■ System configuration

■ [Controller Setting] and [Ethernet] of GT Designer3

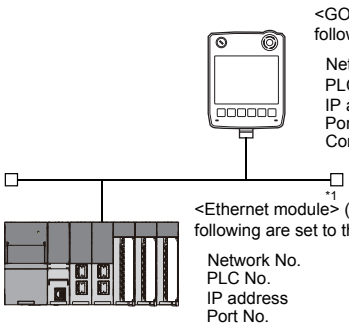

■ [Module parameter] of GX Works3

*1 The Ethernet module is mounted on the base unit slot 0.
The Start XY No. of the Ethernet module is set to "0".

■ [Module parameter] of GX Works3

(1) Module parameter of Ethernet module (MELSEC iQ-R Series)

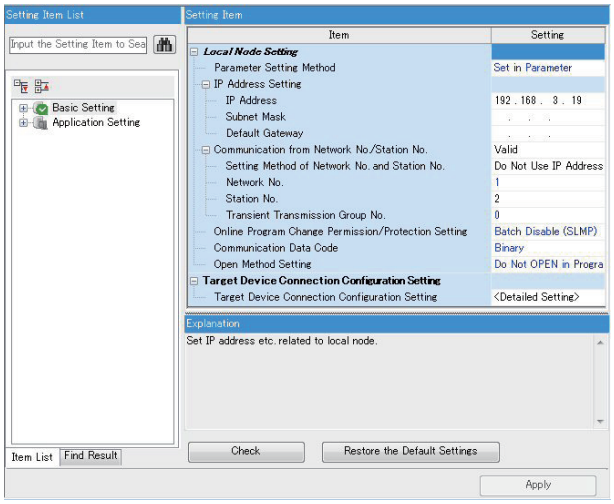

Item	Set value	Setting necessity at GOT connection
IP Address	192.168.3.19	○
Subnet Mask	-	×
Default Gateway	-	×
Setting Method of Network No. and Station No.	Do Not Use IP Address	×
Network No.*1	1	○
Station No.*2	2	○
Transient Transmission Group No.	(Use default value)	×
Online Program Change Permission/Protection Setting		×
Communication Data Code		×
Open Method Setting		×
Target Device Connection Configuration Setting	Refer to (2).	○

○: Necessary △: As necessary ×: Not necessary

*1 Set the same network No. as that of the GOT.
*2 Do not set the same station No. as that of the GOT.

(2) Target Device Connection Configuration Setting

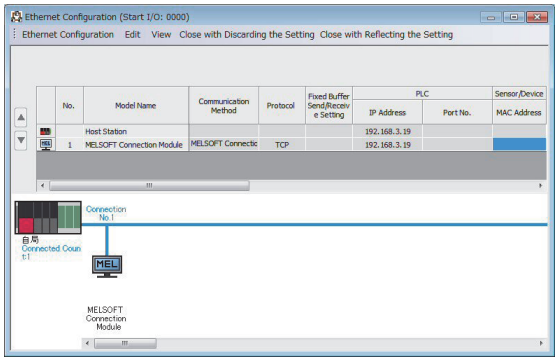

Item	Set value
Protocol	(Use default value)
Open system	MELSOFT connection (fixed)
Host station port No.	(Use default value)

POINT

When changing the module parameter

After writing module parameters to the PLC CPU, turn the PLC CPU OFF then back ON again, or reset the PLC CPU.

(3) Routing setting

Up to 238 [Target Station Network No.] scan be set. However, the same target station network number cannot be set twice or more (multiple times). Therefore, the one that can access to other station from the request source host GOT is 238 kinds of [Target Station Network No.]s.

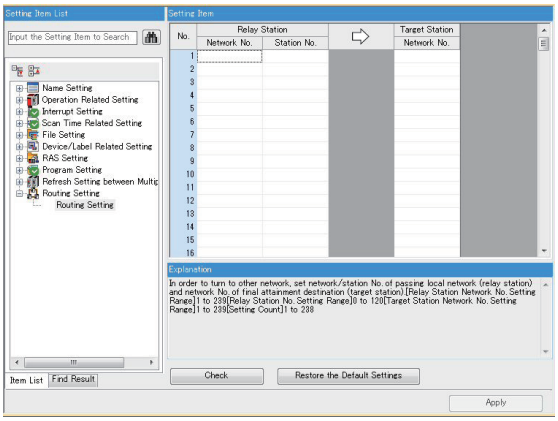

Item	Range
Target Station network No.	1 to 239
Relay Station network No.	1 to 239
Relay station No.	1 to 120

POINT

Routing parameter setting of request source

Routing parameter setting is also necessary for the request source GOT.
For the setting, refer to the following.

23.3.4 Routing parameter setting

(4) Communication confirmation

The INIT. LED on the Ethernet module turns on when the module is ready to communicate.
For confirming the communication state, refer to the following.

■ Confirming the communication state of Ethernet module

RJ71EN71

RUN ERR.
INIT. COM.ERR.
OPEN 100M
SD RD

■ [Controller Setting] and [Ethernet] of GT Designer3

(1) Controller setting

Item	Set value (Use default value)
GOT NET No.	1
GOT PLC No.	1
GOT IP Address	192.168.3.18
GOT Port No. (Communication)	5001
GOT Port No. (Ethernet Download)	5014
Default Gateway	0.0.0.0
Subnet Mask	255.255.255.0
Retry	3times
Startup Time	3sec
Timeout Time	3sec
Delay Time	0ms

(2) Ethernet setting

Item		Set value
Ethernet setting No.1	Host	*
	N/W No.	1
	PLC No.	2
	Type	RJ71EN71
	IP address	192.168.3.19
	Port No.	5001 (fixed)
	Communication	UDP (fixed)

POINT

[Controller Setting] and [Ethernet] of GT Designer3

For [Controller Setting] and [Ethernet] of GT Designer3, refer to the following.

23.3.1 Setting communication interface (Communication settings)

■ Confirming the communication state of Ethernet module

(1) When using the Command Prompt of Windows®.
Execute a Ping command at the Command Prompt of Windows®.

(a) When normal communication
C:\>Ping 192.168.3.19
Reply from 192.168.3.19: bytes=32 time<1ms
TTL=64

(b) When abnormal communication
C:\>Ping 192.168.3.19
Request timed out.

(2) When abnormal communication
At abnormal communication, check the following and execute the Ping command again.
- Mounting condition of Ethernet communication unit
- Cable connecting condition
- Confirmation of switch and network parameter setting
- Operation state of PLC CPU (faulty or not)
- IP address of the Ethernet module specified by Ping command

POINT

Ethernet diagnostics of GX Works3

Ethernet diagnostics of GX Works3 is available to a Ping test from the PLC.
For details of Ethernet diagnostics of GX Developer, refer to the following manual.

Manuals of MELSEC iQ-R Series

23.4.4 Connection to C Controller module (MELSEC iQ-R Series)

This section describes the settings of the GOT and C Controller module (MELSEC iQ-R Series) in the following case of system configuration.

Use CW Configurator for the C Controller module (MELSEC iQ-R Series) communication settings.

POINT

C Controller module (MELSEC iQ-R Series)

For details of C Controller module (MELSEC iQ-R Series), refer to the following manual.

Manuals of C Controller module (MELSEC iQ-R Series)

■ System configuration

■ [Controller Setting] and [Ethernet] of GT Designer3

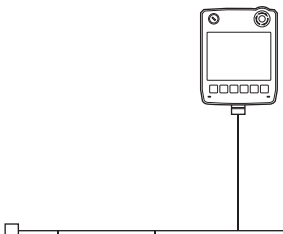

<GOT>
(The settings other than the following are set to the default)
Network No. : 1
PLC No. : 1
IP address : 192.168.0.18
Port No. : 5001
Communication format : UDP(fixed)

1 <C Controller module (MELSEC iQ-R Series)>
(The settings other than the following are set to the default)
Network No. : 1 (virtual) *1
PLC No. : 2 (virtual) *1
IP address : 192.168.3.3
Port No. : 5006(fixed)
Communication format : UDP(fixed)

2 <C Controller module (MELSEC iQ-R Series)>
(The settings other than the following are set to the default)
Network No. : 1 (virtual) *1
PLC No. : 3 (virtual) *1
IP address : 192.168.3.4
Port No. : 5006(fixed)
Communication format : UDP(fixed)

■ [Module parameter] of CW Configurator

*1 These setting items do not exist at the PLC side. However, the virtual values must be set on the GOT side.

■ [Controller Setting] and [Ethernet] of GT Designer3

■ [Module parameter] of CW Configurator

(1) Module parameter

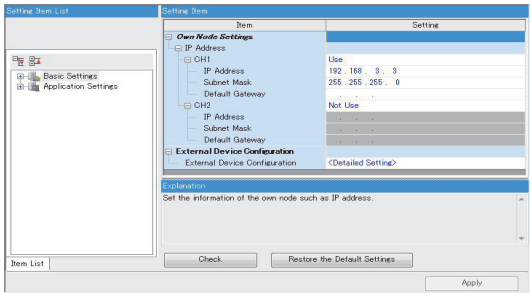

Item*1	Set value	Setting necessity at GOT connection
CH1	Use	×
IP Address	192.168.3.3	×
Subnet Mask	-	×
Default Gateway	-	×
CH2	Not Use	×
IP Address	-	×
Subnet Mask	-	×
Default Gateway	-	×
External Device Configuration	-	×

○: Necessary △: As necessary ×: Not necessary

*1 Set the IP address corresponding to the CH No. to be used to connect to the GOT.

■ [Controller Setting] and [Ethernet] of GT Designer3

POINT

(1) [Controller Setting] and [Ethernet] of GT Designer3
For [Controller Setting] and [Ethernet] of GT Designer3, refer to the following.

☞ 23.3.1 Setting communication interface (Communication settings)

(2) Ethernet setting
When connecting Built-in Ethernet port CPU to a GOT, the setting items for the network No. and station No. do not exist at the PLC side. However, these virtual values must be set on the GOT side. Therefore, set the network No. and station No. Set the network No. that does not exist on the network system and any station No.

(1) Controller setting

Item	Set value (Use default value)
GOT NET No.	1
GOT PLC No.	1
GOT IP Address	192.168.0.18
GOT Port No. (Communication)	5001
GOT Port No. (Ethernet Download)	5014
Default Gateway	0.0.0.0
Subnet Mask	255.255.255.0
Retry	3times
Startup Time	3sec
Timeout Time	3sec
Delay Time	0ms

(2) Ethernet setting

Item		Set value	
		1	2
Ethernet setting No.1	Host	*	-
	N/W No.	1*1	1*1
	PLC No.	2*2	3*2
	Type	RnCCPU	RnCCPU
	IP address	192.168.3.3	192.168.3.4
	Port No.	5006 (fixed)	5006 (fixed)
	Communication	UDP (fixed)	UDP (fixed)

*1 Set the same value as that of GOT N/W No.
*2 Set a value different from that of the GOT PLC No. and the PLC No. of other PLCs on the same network.

■ Checking communication state of C Controller module (MELSEC iQ-R Series)

(1) When using the Command Prompt of Windows®.
Execute a Ping command at the Command Prompt of Windows®.

(a) When normal communication
C:\>Ping 192.168.3.3
Reply from 192.168.3.3: bytes=32 time <10ms TTL=32

(b) When abnormal communication
C:\>Ping 192.168.3.3
Request timed out.

(2) When abnormal communication
At abnormal communication, check the following and execute the Ping command again.
- Cable connecting condition
- Confirmation of switch and network parameter setting
- Operation state of PLC CPU (faulty or not)
- The IP address of C Controller module (MELSEC iQ-R Series) specified in the ping command

POINT

Ethernet diagnostics of CW Configurator

Ethernet diagnostics of CW Configurator is available to a Ping test from the PLC.
For details of Ethernet diagnostics of CW Configurator, refer to the following manual.

☞ Manuals of C Controller module (MELSEC iQ-R Series)

23.4.5 Connecting to Built-in Ethernet port CPU (one-to-one connection)

This section describes the settings of the GOT and Built-in Ethernet port CPU in the following case of system configuration.

POINT

Connecting to Built-in Ethernet port CPU

For details of Built-in Ethernet port CPU, refer to the following manual.

☞ QnUCPU User's Manual (Communication via Built-in Ethernet Port)

☞ MELSEC-L CPU Module User's Manual(Built-In Ethernet Function)

■ System configuration

For connecting one Built-in Ethernet port QCPU to one GOT, the PLC side settings are not required. Set [Ethernet] for [Controller Setting] on GT Designer3, and then connect Built-in Ethernet port QCPU to the GOT.

☞ ■ [Controller Setting] and [Ethernet] of GT Designer3

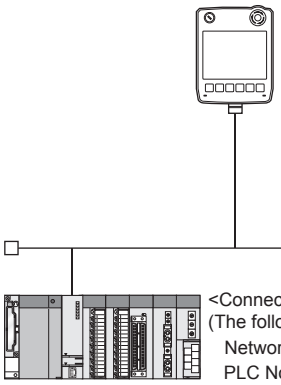

<GOT>
(The settings other than the following are set to the default)
Network No. : 1
PLC No. : 1
IP address : 192.168.3.1
Port No. : 5001
Communication format : UDP (fixed)

<Connecting to Built-in Ethernet port CPU>*1
(The following settings are set to the default)
Network No. : 1 (virtual)*2
PLC No. : 2 (virtual)*2
IP address : 192.168.3.39
Port No. : 5006 (fixed)
Communication format : UDP (fixed)

*1 For the settings when using system devices including a hub and a transceiver, refer to the following.

☞ 23.4.6 Connecting to Built-in Ethernet port CPU (multiple connection)

*2 These setting items do not exist on the PLC side. However, the virtual values must be set on the GOT side.

☞ ■ [Controller Setting] and [Ethernet] of GT Designer3

■ [Controller Setting] and [Ethernet] of GT Designer3

POINT

(1) [Controller Setting] and [Ethernet] of GT Designer3
For [Controller Setting] and [Ethernet] of GT Designer3, refer to the following.

☞ 23.3.1 Setting communication interface (Communication settings)

(2) Ethernet setting
When connecting Built-in Ethernet port QCPU or LCPU to a GOT, the setting items for the network No. and station No. do not exist on the PLC side. However, these virtual values must be set on the GOT side. Therefore, set the network No. and station No.
Set a network No. that does not exist on the network system.

(1) Controller setting

Item	Setting (Use default value.)
GOT NET No.	1
GOT PLC No.	1
GOT IP Address	192.168.3.1
GOT Port No. (Communication)	5001
GOT Port No. (Ethernet Download)	5014
Default Gateway	0.0.0.0
Subnet Mask	255.255.255.0
Retry	3times
Startup Time	3sec
Timeout Time	3sec
Delay Time	0ms

(2) Ethernet setting

Item		Set value
Ethernet setting No.1	Host	*
	N/W No.	1*1
	PLC No.	2*2
	Type	QnUDE(H), LCPU
	IP Address	192.168.3.39
	Port No.	5006 (fixed)
	Communication	UDP (fixed)

*1 Set the same value as that of GOT N/W No.
*2 Set a value different from that of GOT PLC No.

■ Checking communication state of Built-in Ethernet port CPU

(1) When using the Command Prompt of Windows®
Execute a Ping command at the Command Prompt of Windows®.

(a) When normal communication
C:\>Ping 192.168.3.39
Reply from 192.168.3.39: bytes=32 time <10ms TTL=32

(b) When abnormal communication
C:\>Ping 192.168.3.39
Request timed out.

(2) When abnormal communication
At abnormal communication, check the followings and execute the Ping command again.
- Cable connecting condition
- Confirmation of switch and network parameter setting
- Operation state of PLC CPU (faulty or not)
- The IP address of Built-in Ethernet port CPU specified in the ping command

POINT

Ethernet diagnostics of GX Developer
Ethernet diagnostics of GX Developer is available to a Ping test from the PLC.
For details of Ethernet diagnostics of GX Developer, refer to the following manual.

☞ QCPU User's Manual (Hardware Design, Maintenance and Inspection)
☞ MELSEC-L CPU Module User's Manual (Hardware Design, Maintenance and Inspection)

23.4.6 Connecting to Built-in Ethernet port CPU (multiple connection)

This section describes the settings of the GOT and Built-in Ethernet port CPU in the following case of system configuration.

POINT

Connecting to Built-in Ethernet port CPU

For details of Built-in Ethernet port CPU, refer to the following manual.

☞ QnUCPU User's Manual (Communication via Built-in Ethernet Port)

☞ LCPU User's Manual (Communication via Built-in Ethernet Port)

■ System configuration

☞ ■ [Controller Setting] and [Ethernet] of GT Designer3

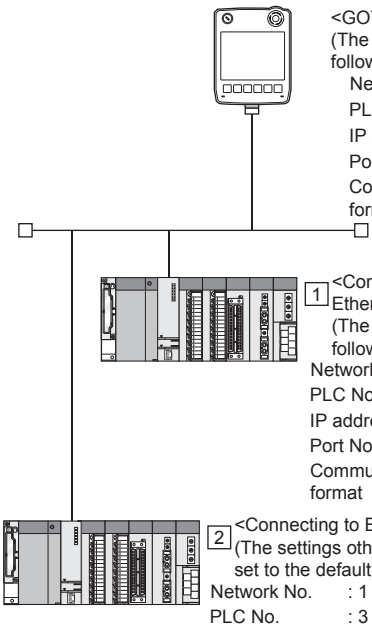

<GOT>
(The settings other than the following are set to the default)
Network No. : 1
PLC No. : 1
IP address : 192.168.0.18
Port No. : 5001
Communication format : UDP(fixed)

1 <Connecting to Built-in Ethernet port CPU>
(The settings other than the following are set to the default)
Network No. : 1 (virtual) *1
PLC No. : 2 (virtual) *1
IP address : 192.168.0.1
Port No. : 5006(fixed)
Communication format : UDP(fixed)

2 <Connecting to Built-in Ethernet port CPU>
(The settings other than the following are set to the default)
Network No. : 1 (virtual) *1
PLC No. : 3 (virtual) *1
IP address : 192.168.0.2
Port No. : 5006(fixed)
Communication format : UDP(fixed)

☞ ■ [Q parameter setting] or [L parameter setting] for GX Developer

*1 These setting items do not exist on the PLC side. However, the virtual values must be set on the GOT side.

☞ ■ [Controller Setting] and [Ethernet] of GT Designer3

■ [Q parameter setting] or [L parameter setting] for GX Developer

(1) Built-in Ethernet port

Example: [Q parameter setting] screen

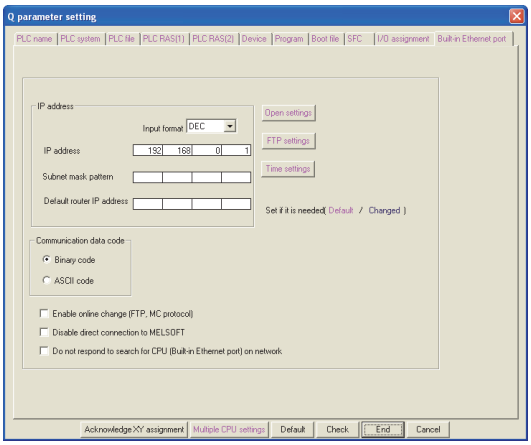

Item	Set value	Setting necessity at GOT connection
IP Address	192.168.0.1	○
Subnet mask pattern	-	×
Default router IP address	-	×
Communication data code	(Use default value)	△
Enable online change (FTP, MC protocol)		△
Disable direct connection to MELSOFT		△
Do not respond to search for CPU (Built-in Ethernet port) on network		△
Open settings	Refer to (2).	○
FTP settings	(Use default value)	△
Time settings		△

○: Necessary △: As necessary ×: Not necessary

(2) Open settings

The setting is required for all the connected GOTs.

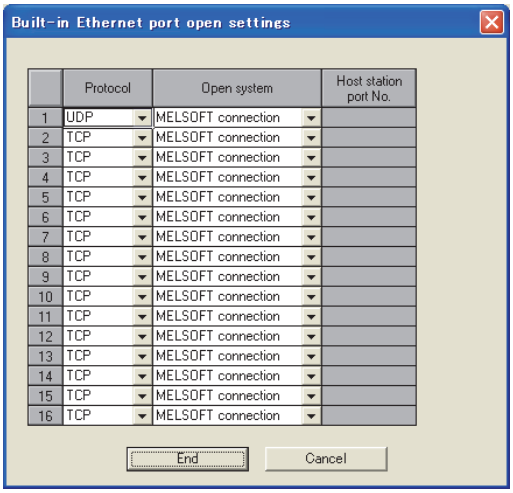

Item	Set value
Protocol	UDP (fixed)
Open system	MELSOFT connection (fixed)
Host station port No.	(Use default value)

■ [Controller Setting] and [Ethernet] of GT Designer3

POINT

(1) [Controller Setting] and [Ethernet] of GT Designer3
For [Controller Setting] and [Ethernet] of GT Designer3, refer to the following.

☞ 23.3.1 Setting communication interface (Communication settings)

(2) Ethernet setting
When connecting Built-in Ethernet port CPU to a GOT, the setting items for the network No. and station No. do not exist on the PLC side. However, these virtual values must be set on the GOT side. Therefore, set the network No. and station No. Set a network No. that does not exist on the network system.

(1) Controller setting

Item	Setting (Use default value.)
GOT NET No.	1
GOT PLC No.	1
GOT IP Address	192.168.0.18
GOT Port No. (Communication)	5001
GOT Port No. (Ethernet Download)	5014
Default Gateway	0.0.0.0
Subnet Mask	255.255.255.0
Retry	3times
Startup Time	3sec
Timeout Time	3sec
Delay Time	0ms

(2) Ethernet setting

Item		Set value	
		1	2
Ethernet setting No.1	Host	*	-
	N/W No.	1*1	1*1
	PLC No.	2*2	3*2
	Type	QnUDE(H), LCPU	QnUDE(H), LCPU
	IP Address	192.168.0.1	192.168.0.2
	Port No.	5006 (fixed)	5006 (fixed)
	Communication	UDP (fixed)	UDP (fixed)

*1 Set the same value as that of GOT N/W No.
*2 Set a value different from that of the GOT PLC No. and the PLC No. of other PLCs on the same network.

■ Checking communication state of Built-in Ethernet port CPU

(1) When using the Command Prompt of Windows
Execute a Ping command at the Command Prompt of Windows®.

(a) When normal communication
```
C:\>Ping 192.168.0.1
Reply from 192.168.0.1: bytes=32 time
<10ms TTL=32
```

(b) When abnormal communication
```
C:\>Ping 192.168.0.1
Request timed out.
```

(2) When abnormal communication
At abnormal communication, check the followings and execute the Ping command again.
- Cable connecting condition
- Confirmation of switch and network parameter setting
- Operation state of PLC CPU (faulty or not)
- The IP address of Built-in Ethernet port CPU specified in the ping command

POINT

Ethernet diagnostics of GX Developer

Ethernet diagnostics of GX Developer is available to a Ping test from the PLC.
For details of Ethernet diagnostics of GX Developer, refer to the following manual.

☞ QCPU User's Manual (Hardware Design, Maintenance and Inspection)

☞ MELSEC-L CPU Module User's Manual (Hardware Design, Maintenance and Inspection)

23.4.7 Connecting to Ethernet module (Q/L Series)

This section describes the settings of the GOT and Ethernet module (Q Series) in the following case of the system configuration.

POINT

Ethernet module (Q/L Series)

For details of the Ethernet module (Q/L Series), refer to the following manual.

☞ Q Corresponding Ethernet Interface Module User's Manual (Basic)

☞ MELSEC-L Ethernet Interface Module User's Manual (Basic)

■ System configuration

☞ ■ [Controller Setting] and [Ethernet] of GT Designer3

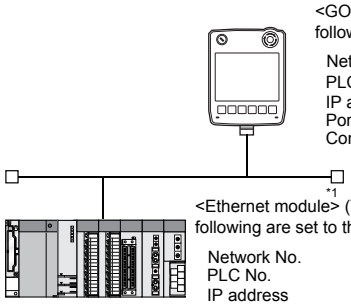

<GOT> (The settings other than the following are set to the default)

Network No. : 1
PLC No. : 1
IP address : 192.168.0.18
Port No. : 5001
Communication format : UDP (fixed)

*1

<Ethernet module> (The settings other than the following are set to the default)

Network No. : 1
PLC No. : 2
IP address : 192.168.0.19
Port No. : 5001
Communication format : UDP (fixed)

☞ ■ [Network parameter] of GX Developer

*1 The Ethernet module is mounted on the base unit slot 0. The Start I/O No. of the Ethernet module is set to "0".

POINT

Connecting to Q170MCPU

When connected to Q170MCPU, the start I/O No. of the Ethernet module is set to "70".

■ [Network parameter] of GX Developer

(1) Network parameter

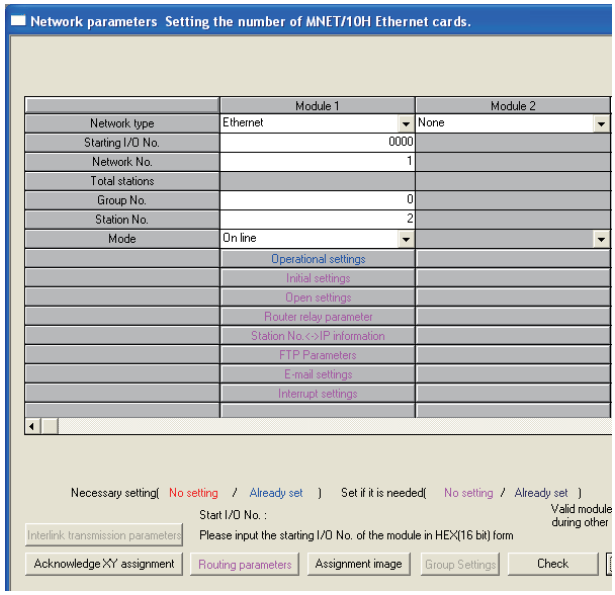

Item	Set value	Setting necessity at GOT connection
Network type	Ethernet (fixed)	○
Start I/O No.*1	0000H	○
Network No.*2	1	○
Group No.	0 (fixed)	○
Station No.*3	2	○
Mode	Online (fixed)	○
Operational settings	Refer to (2).	○
Initial settings	(Use default value)	△
Open settings		×
Router relay parameter		×
Station No. <->IP information		×
FTP Parameters		×
E-mail settings		×
Interrupt settings		×
Redundant settings*4		△
Routing parameters	Refer to (3).	△

○: Necessary △: As necessary ×: Not necessary

*1 When using Q170MCPU, set it according to the system configuration.
*2 Set the same network No. as that of the GOT.
*3 Do not set the same station No. as that of the GOT.
*4 Set when using Ethernet module in a redundant QnPRHCPU system.

(2) Operation setting

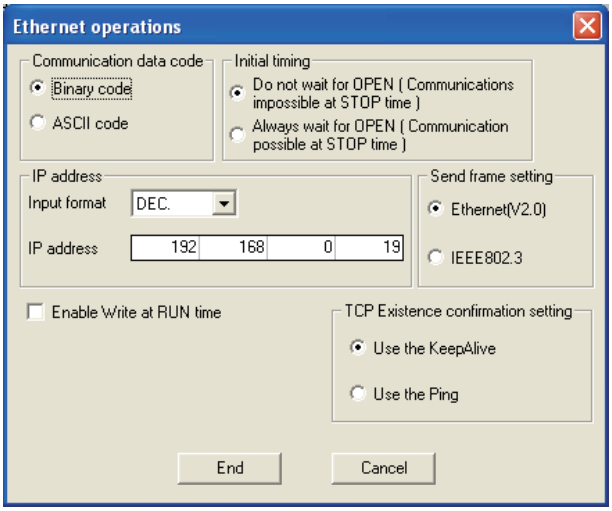

Item	Set value	Setting necessity at GOT connection
Communication data code*1	(Use default value)	×
IP address	192.168.0.19	○
Initial timing*1	(Use default value)	×
Send frame setting		×
Enable Write at RUN time*1		×
TCP Existence confirmation setting		×

○: Necessary △: As necessary ×: Not necessary

*1 Because port No. 5001 is fixed, these items operate at the following setting without relations to the setting given here.

- Communication data code : "Binary code"
- Initial timing : "Always wait for OPEN" (Communication is available while the programmable controller CPU stops.)
- Write during RUN : "Enable Write at RUN time" (Writing Data is available while the PLC CPU is running.)

POINT

When changing the network parameter

After writing the network parameter to the PLC CPU, turn off and then on, or reset the PLC CPU.

(3) Routing parameter setting

Up to 64 [Transfer Network No.]s can be set.
However, the same transfer network number cannot be set twice or more (multiple times).
Therefore, the one that can access to other station from the request source host GOT is 64 kinds of [Transfer Network No.]s.

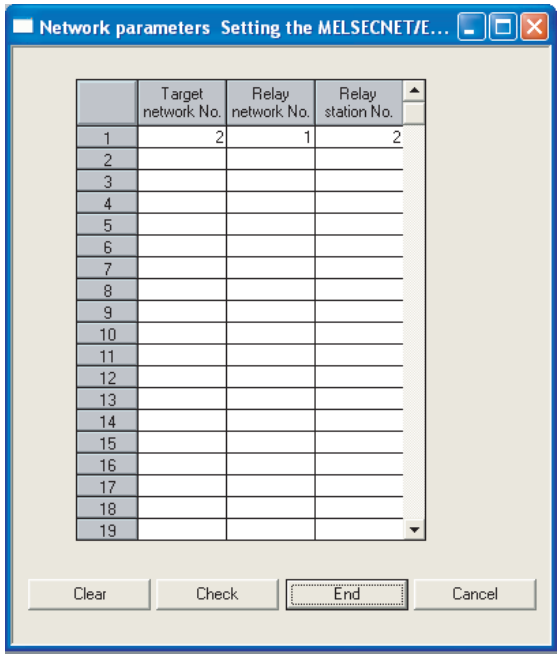

Item	Range
Target network No.	1 to 239
Relay network No.	1 to 239
Relay station No.	1 to 64

POINT

Routing parameter setting of request source

Routing parameter setting is also necessary for the request source GOT.
For the setting, refer to the following.

☞ 23.3.4 Routing parameter setting

(4) Communication confirmation

The INIT. LED on the Ethernet module turns on when the module is ready to communicate.
For confirming the communication state, refer to the following.

☞ ■ Confirming the communication state of Ethernet module

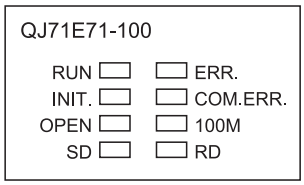

*1

*1 The LEDs layout of QJ71E71-100.

■ [Controller Setting] and [Ethernet] of GT Designer3

(1) Controller setting

Item	Setting (Use default value.)
GOT NET No.	1
GOT PLC No.	1
GOT IP Address	192.168.0.18
GOT Port No. (Communication)	5001
GOT Port No. (Ethernet Download)	5014
Default Gateway	0.0.0.0
Subnet Mask	255.255.255.0
Retry	3times
Startup Time	3sec
Timeout Time	3sec
Delay Time	0ms

(2) Ethernet setting

Item		Set value
Ethernet setting No.1	Host	*
	N/W No.	1
	PLC No.	2
	Type	QJ71E71
	IP Address	192.168.3.19
	Port No.	5001 (fixed)
	Communication	UDP (fixed)

POINT

[Controller Setting] and [Ethernet] of GT Designer3

For [Controller Setting] and [Ethernet] of GT Designer3, refer to the following.

☞ 23.3.1 Setting communication interface (Communication settings)

■ Confirming the communication state of Ethernet module

(1) When using the Command Prompt of Windows

Execute a Ping command at the Command Prompt of Windows®.

(a) When normal communication

C:\>Ping 192.168.0.19
Reply from 192.168.0.19: bytes=32 time<1ms TTL=64

(b) When abnormal communication

C:\>Ping 192.168.0.19
Request timed out.

(2) When abnormal communication

At abnormal communication, check the followings and execute the Ping command again.

- Mounting condition of Ethernet module
- Cable connecting condition
- Confirmation of switch and network parameter setting
- Operation state of PLC CPU (faulty or not)
- IP address of GOT specified by Ping command

POINT

Ethernet diagnostics of GX Developer

Ethernet diagnostics of GX Developer is available to a Ping test from the PLC.
For details of Ethernet diagnostics of GX Developer, refer to the following manual.

☞ User's manual of the Ethernet module

23.4.8 Connecting to C controller module (Q Series)

This section describes the settings of the GOT and C controller module (Q Series) in the following case of the system configuration.

POINT

C Controller module (Q Series)

For details of C controller module (Q Series), refer to the following manual.

C Controller Module User's Manual (Hardware, Design, Function Explanation)

■ System configuration

■ [Controller Setting] and [Ethernet] of GT Designer3

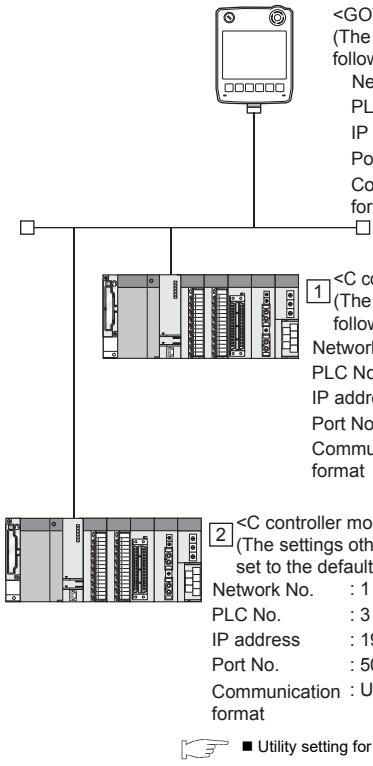

<GOT>
(The settings other than the following are set to the default)
Network No. : 1
PLC No. : 1
IP address : 192.168.3.18
Port No. : 5001
Communication format : UDP(fixed)

1 <C controller module (Q Series)>
(The settings other than the following are set to the default)
Network No. : 1 (virtual) *1
PLC No. : 2 (virtual) *1
IP address : 192.168.3.1
Port No. : 5006(fixed)
Communication format : UDP(fixed)

2 <C controller module (Q Series)>
(The settings other than the following are set to the default)
Network No. : 1 (virtual) *1
PLC No. : 3 (virtual) *1
IP address : 192.168.3.2
Port No. : 5006(fixed)
Communication format : UDP(fixed)

■ Utility setting for C controller module (Q Series)

*1 These setting items do not exist on the PLC side. However, the virtual values must be set on the GOT side.

■ [Controller Setting] and [Ethernet] of GT Designer3

■ Utility setting for C controller module (Q Series)

(1) Q12DCCPU-V

Use SW3PVC-CCPU-J Ver.3.04E or later for the C Controller module (Q Series) setting utility.

(a) Connection settings

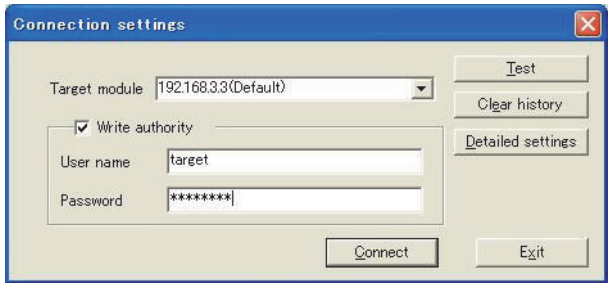

Item	Set value	Setting necessity at GOT connection
Target module*1	192.168.3.3	○
Write authority	Mark the checkbox	○
User name	target	○
Password	password	○
Detailed settings	-	△

○: Necessary △: As necessary ×: Not necessary

*1 If the IP address of the C controller module (Q Series) has been changed, input the changed IP address or host name.

*2 If the account of the C controller module (Q Series) has been changed, input the changed user name and password.

(b) Online operation

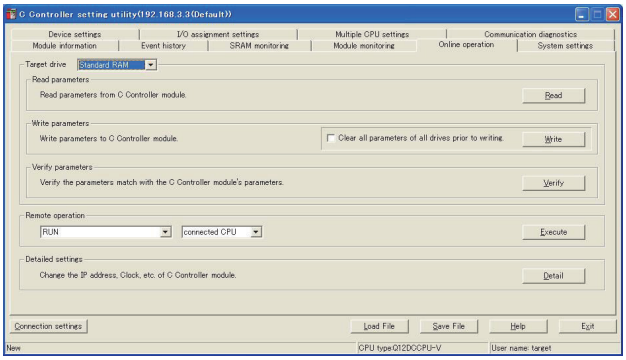

Item	Set value	Setting necessity at GOT connection
Detailed settings	Refer to (3).	○

○: Necessary △: As necessary ×: Not necessary

(c) Detailed settings

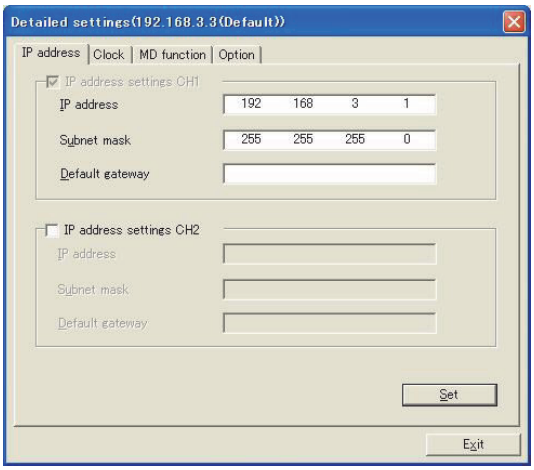

Item	Set value	Setting necessity at GOT connection
IP Address	192.168.3.1	○
Subnet Mask	255.255.255.0	○
Default Gateway	-	×
IP address setting CH2	-	×

○: Necessary △: As necessary ×: Not necessary

(d) System settings

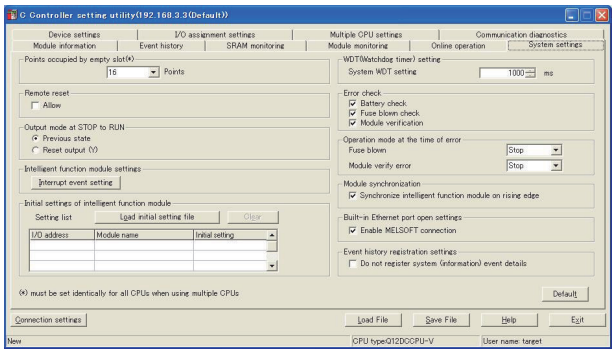

Item	Set value	Setting necessity at GOT connection
Points occupied by empty slot	(Use default value)	△
Remote reset		
Output mode at STOP to RUN		
Intelligent function module settings		
Initial settings of intelligent function module		
WDT (Watching timer) setting		
Error check		
Operation mode at the time of error		
Module synchronization		
Built-in Ethernet port open settings	Mark the checkbox	○
Event history registration settings	(Use default value)	△

○: Necessary △: As necessary ×: Not necessary

(2) Q24DHCCPU-V/VG

Use SW4PVC-CCPU-J for the C Controller (Q Series) setting utility.

(a) Connection settings

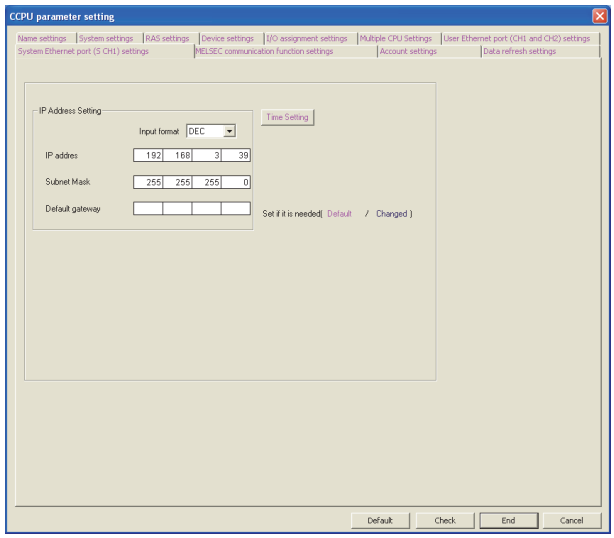

Item	Set value	Setting necessity at GOT connection
IP Address*1	192.168.3.39 (Default)	○
Subnet Mask	255.255.255.0 (Default)	○
Default Gateway	-	×

○: Necessary △: As necessary ×: Not necessary

*1 If the IP address of the C controller module (Q Series) has been changed, input the changed IP address.

■ [Controller Setting] and [Ethernet] of GT Designer3

POINT

(1) [Controller Setting] and [Ethernet] of GT Designer3
For [Controller Setting] and [Ethernet] of GT Designer3, refer to the following.

☞ 23.3.1 Setting communication interface (Communication settings)

(2) Ethernet setting
When connecting a C controller module (Q Series) to a GOT, the setting items for the network No. and station No. do not exist on the PLC side. However, these virtual values must be set on the GOT side. Therefore, set the network No. and station No. Set a network No. that does not exist on the network system.

(1) Controller setting

Item	Setting (Use default value.)
GOT NET No.	1
GOT PLC No.	1
GOT IP Address	192.168.3.18
GOT Port No. (Communication)	5001
GOT Port No. (Ethernet Download)	5014
Default Gateway	0.0.0.0
Subnet Mask	255.255.255.0
Retry	3times
Startup Time	3sec
Timeout Time	3sec
Delay Time	0ms

(2) Ethernet setting

Item		Set value	
		1	2
Ethernet setting No.1	Host	*	-
	N/W No.	1*1	1*1
	PLC No.	2*2	3*2
	Type	Q12DCCPU	Q12DCCPU
	IP Address	192.168.3.1	192.168.3.2
	Port No.	5006 (fixed)	5006 (fixed)
	Communication	UDP (fixed)	UDP (fixed)

*1 Set the same value as that of GOT N/W No.
*2 Set a value different from that of the GOT PLC No. and the PLC No. of other PLCs on the same network.

■ Checking communication state of C controller module (Q Series)

(1) When using the Command Prompt of Windows®
Execute a Ping command at the Command Prompt of Windows®.

(a) When normal communication
C:\>Ping 192.168.3.1
Reply from 192.168.3.1: bytes=32 time <10ms TTL=32

(b) When abnormal communication
C:\>Ping 192.168.3.1
Request timed out.

(2) When abnormal communication
At abnormal communication, check the followings and execute the Ping command again.
- Cable connecting condition
- Confirmation of switch and network parameter setting
- Operation state of PLC CPU (faulty or not)
- The IP address of Built-in Ethernet port CPU specified in the ping command

23.4.9 Connecting to Ethernet module (QnA Series)

This section describes the settings of the GOT and Ethernet module (QnA Series) in the following case of the system configuration.

POINT

Ethernet module (QnA Series)

For details of the Ethernet module (QnA Series), refer to the following manual.

For QnA Ethernet Interface Module User's Manual

■ System configuration

■ [Controller Setting] and [Ethernet] of GT Designer3

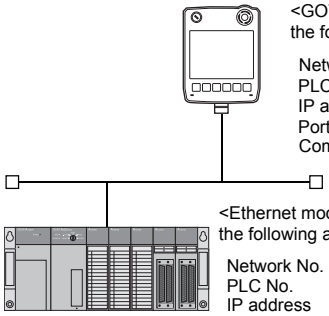

<GOT>(The settings other than the following are set to the default)

Network No.	: 1
PLC No.	: 1
IP address	: 192.168.0.18
Port No.	: 5001
Communication format	: UDP(fixed)

<Ethernet module>*1 (The settings other than the following are set to the default)

Network No.	: 1
PLC No.	: 2
IP address	: 192.168.0.19
Port No.	: 5001
Communication format	: UDP(fixed)

■ Switch settings of Ethernet module

■ [Network parameter] of GX Developer

*1 The Ethernet module is mounted on the base unit slot 0. The Start I/O No. of the Ethernet module is set to "0".

■ Switch settings of Ethernet module

Set the operation mode setting switch and exchange condition setting switch.

AJ71QE71N3-T, AJ71QE71N-B5, AJ71QE71N-B2, AJ71QE71N-T, AJ71QE71N-B5T, AJ71QE71, AJ71QE71-B5

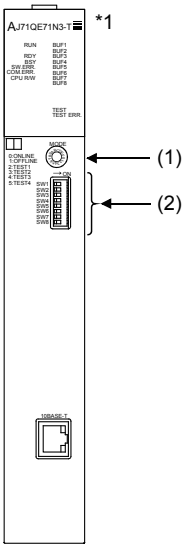

A1SJ71QE71N3-T, A1SJ71QE71N-B5, A1SJ71QE71N-B2, A1SJ71QE71N-T, A1SJ71QE71N-B5T, A1SJ71QE71-B5, A1SJ71QE71-B2

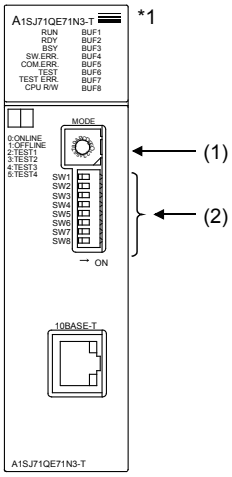

*1 The figure of AJ71QE71N3-T and A1SJ71QE71N3-T.

(1) Operation mode setting switch

Operation mode setting switch	Description	Set value	Setting necessity at GOT connection
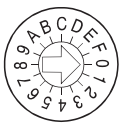	Online	0 (fixed)	○

○: Necessary △: As necessary ×: Not necessary

(2) Exchange condition setting switch

Exchange condition setting switch	Setting switch	Description	Set value	Setting necessity at GOT connection
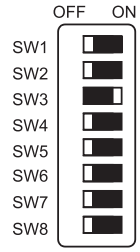	SW1	Selection of line processing at TCP timeout error	OFF	△
	SW2	Data code setting*1	OFF (fixed)	×
	SW3	Self start mode setting*2	ON	○
	SW4	(Must not to be used)	OFF (fixed)	×
	SW5			
	SW6			
	SW7	CPU exchange timing setting*1	OFF (fixed)	×
	SW8	Initial timing setting	OFF	△

○: Necessary △: As necessary ×: Not necessary

*1 Because port No. 5001 is fixed, these items operate at the following setting without relations to the setting given here.

- Data code setting : "Binary code"
- Write during RUN : "Enable Write at RUN time" (Writing Data is available while the PLC CPU is running.)

*2 When SW3 is ON, the initial processing is executed regardless of the initial request signal (Y19).
In addition, communication is available while the programmable controller CPU stops.
For the initial processing by using the initial request signal (Y19), refer to the following manual.

For QnA Ethernet Interface Module User's Manual

POINT

When the switch setting has been changed

Turn the PLC CPU OFF then ON again, or reset the PLC CPU.

■ [Network parameter] of GX Developer

(1) Network parameter

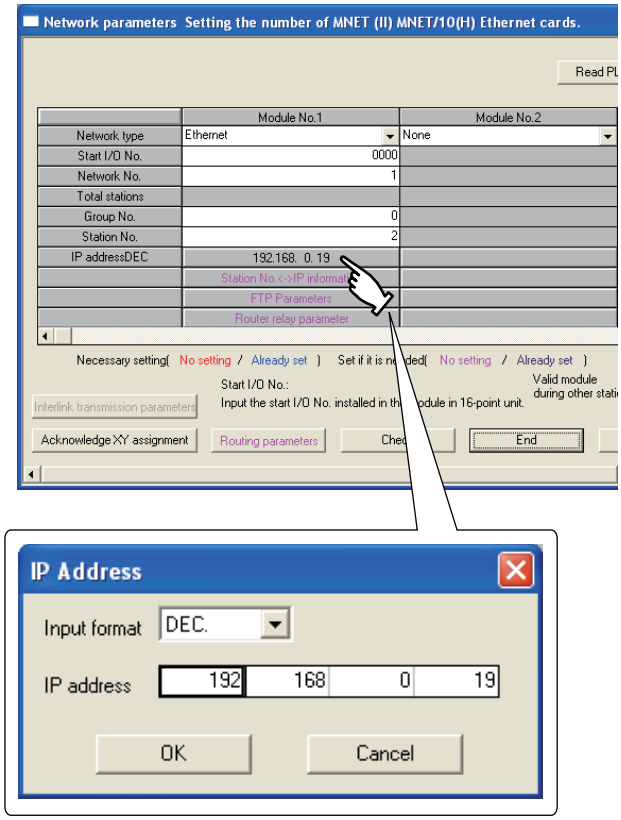

Item	Set value	Setting necessity at GOT connection
Network type	Ethernet (fixed)	○
Start I/O No.	0000H	○
Network No.*1	1	○
Group No.	0 (fixed)	○
Station No.*2	2	○
IP Address	192.168.0.19	○
Station No. <->IP information	(Use default value)	×
FTP Parameters		×
Router relay parameter		×
Routing parameters	Refer to (2).	△

○: Necessary △: As necessary ×: Not necessary

*1 Set the same network No. as that of the GOT.
*2 Do not set the same station No. as that of the GOT.

POINT

When changing the network parameter

After writing the network parameter to the PLC CPU, turn off and then on, or reset the PLC CPU.

(2) Routing parameter setting

Up to 64 [Transfer Network No.]s can be set.
However, the same transfer network number cannot be set twice or more (multiple times).
Therefore, the one that can access to other station from the request source host GOT is 64 kinds of [Transfer Network No.]s.

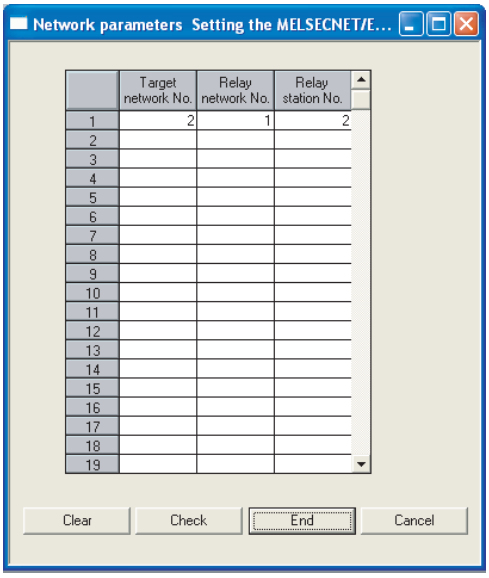

Item	Range
Target network No.	1 to 239
Relay network No.	1 to 239
Relay station No.	1 to 64

POINT

Routing parameter setting of request source

Routing parameter setting is also necessary for the request source GOT.
For the setting, refer to the following.

☞ 23.3.4 Routing parameter setting

(3) Communication confirmation

The RDY LED on the Ethernet module turns on when the module is ready to communicate.
For confirming the communication state, refer to the following.

☞ 23.4.7 ■ Confirming the communication state of Ethernet module

AJ71QE71N3-T, AJ71QE71N-B5, AJ71QE71N-B2, AJ71QE71N-T, AJ71QE71N-B5T, AJ71QE71, AJ71QE71-B5

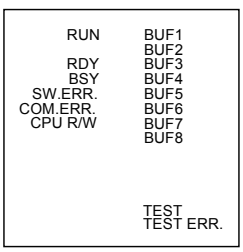

A1SJ71QE71N3-T, A1SJ71QE71N-B5, A1SJ71QE71N-B2, A1SJ71QE71N-T, A1SJ71QE71N-B5T,A1SJ71QE71-B5, A1SJ71QE71-B2

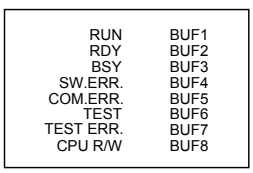

■ [Controller Setting] and [Ethernet] of GT Designer3

(1) Controller setting

Item	Setting (Use default value.)
GOT NET No.	1
GOT PLC No.	1
GOT IP Address	192.168.0.18
GOT Port No. (Communication)	5001
GOT Port No. (Ethernet Download)	5014
Default Gateway	0.0.0.0
Subnet Mask	255.255.255.0
Retry	3times
Startup Time	3sec
Timeout Time	3sec
Delay Time	0ms

(2) Ethernet setting

Item		Set value
Ethernet setting No.1	Host	*
	N/W No.	1
	PLC No.	2
	Type	AJ71QE71
	IP Address	192.168.0.19
	Port No.	5001 (fixed)
	Communication	UDP (fixed)

POINT

[Controller Setting] and [Ethernet] of GT Designer3

For [Controller Setting] and [Ethernet] of GT Designer3, refer to the following.

☞ 23.3.1 Setting communication interface (Communication settings)

23.4.10 Connecting to Ethernet module (A Series)

This section describes the settings of the GOT and Ethernet module (A Series) in the following case of the system configuration.

POINT

Ethernet module (A Series)

For details of the Ethernet module (A Series), refer to the following manual.

For A Ethernet Interface Module User's Manual

■ System configuration

■ [Controller Setting] and [Ethernet] of GT Designer3

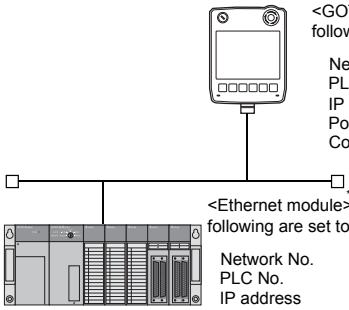

<GOT> (The settings other than the following are set to the default)

Network No. : 1
PLC No. : 1
IP address : 192.168.0.18
Port No. : 5001
Communication format : UDP (fixed)

<Ethernet module>*1 (The settings other than the following are set to the default)

Network No. : 1 (virtual)*2
PLC No. : 2 (virtual)*2
IP address : 192.168.0.19
Port No. : 5001
Communication format : UDP(fixed)

■ Switch settings of Ethernet module
■ Sequence program

*1 The Ethernet module is mounted on the base unit slot 0. The Start I/O No. of the Ethernet module is set to "0".

*2 These setting items do not exist on the PLC side. However, the virtual values must be set on the GOT side.

■ [Controller Setting] and [Ethernet] of GT Designer3

■ Switch settings of Ethernet module

Set the operation mode setting switch and exchange condition setting switch.

AJ71E71N3-T, AJ71E71N-B5, AJ71E71N-B2, AJ71E71N-T, AJ71E71N-B5T, AJ71E71-S3

A1SJ71E71N3-T, A1SJ71E71N-B5, A1SJ71E71N-B2, A1SJ71E71N-T, A1SJ71E71N-B5T, A1SJ71E71-B5-S3, A1SJ71E71-B2-S3

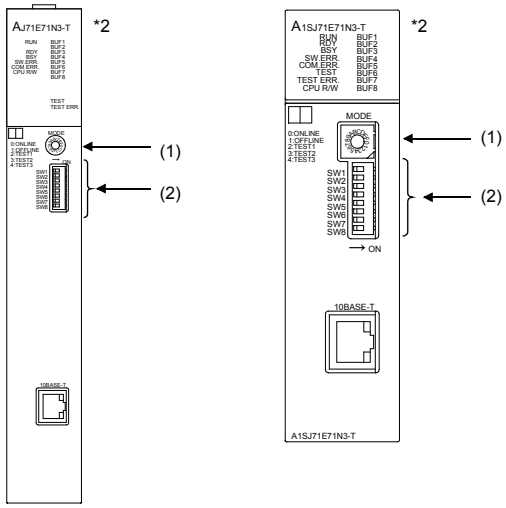

*2 The figure of AJ71E71N3-T and A1SJ71E71N3-T.

(1) Operation mode setting switch

Operation mode setting switch	Description	Set value	Setting necessity at GOT connection
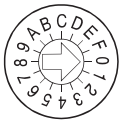	Online	0 (fixed)	○

○: Necessary △: As necessary ×: Not necessary

(2) Exchange condition setting switch*1

Exchange condition setting switch	Setting switch	Description	Set value	Setting necessity at GOT connection
	SW1	Selection of line processing at TCP timeout error	OFF	△
	SW2	Data code setting (binary code)	OFF (fixed)	○
	SW3	(Must not to be used)	OFF (fixed)	×
	SW4			
	SW5			
	SW6			
	SW7	CPU exchange timing setting (Enable write at RUN time)	ON (fixed)	○
	SW8	Initial timing setting	OFF	△

○: Necessary △: As necessary ×: Not necessary

*1 The exchange condition setting switches of A1SJ71E71-B5-S3 and A1SJ71E71-B2-S3 are specified as the below.

Exchange condition setting switch	Setting switch	Description	Set value	Setting necessity at GOT connection
ON OFF SW1 SW2 SW3 SW4	SW1	Selection of line processing at TCP timeout error	OFF	△
	SW2	Data code setting (binary code)	OFF (fixed)	○
	SW3	CPU exchange timing setting (Enable write at RUN time)	ON (fixed)	○
	SW4	Initial timing setting	OFF	△

○: Necessary △: As necessary ×: Not necessary

POINT

When the switch setting has been changed

Turn the PLC CPU OFF then ON again, or reset the PLC CPU.

■ Sequence program

The sequence program for initial processing and communication line opening processing is required.

(1) Programming condition

This program performs the initial processing of the Ethernet module and the opening processing of connection No. 1 when the stopping PLC CPU starts running.

(a) I/O signal of Ethernet module

☞ For A Ethernet Interface Module User's Manual

(b) Device used by user

Device	Application
M102	COM.ERR turned off command
D100	IP address of Ethernet module
D110	Application setting
D111	Port No. of Ethernet module
D112 to D113	IP address of GOT
D114	Port No. of GOT
D200	Initial fault code

(c) Buffer memory settings used in the present example

Buffer memory address Dec (Hex)	Item	Set value
0 to 1 (0 to 1H)	IP address of Ethernet module	C0A80013H (192.168.0.19)
16 (10H)	Application setting*1	100H
24 (18H)	Port No. of Ethernet module	5001
25 to 26 (19 to 1AH)	IP address of GOT	FFFFFFFFH
27 (1BH)	Port No. of GOT	FFFFH (fixed)
80 (50H)	Initial fault code	-

*1 The details of the application setting are shown below.
Settings 1), 2) and 3) can be changed by the user.
4), 5) and 6) are fixed.

b15	b14	b13	b12	b11	b10	b9	b8	b7	b6	b5	b4	b3	b2	b1	b0
0	0	0	0	0	0	0	1	0	0	0	0	0	0	0	0
6)						5)	4)	3)						2)	1)

1) Fixed buffer application
0: For sending; no exchange
1: For receiving
2) Existence check
0: No
1: Yes
3) Pairing open
0: No
1: Yes
4) Communication format (Set to "1" (UDP/IP).)
0: TCP/IP
1: UDP/IP
5) Fixed buffer exchange (Set to "0" (With procedure).)
0: With procedure
1: Without procedure
6) Open method (Set to "00" (Active, UDP/IP).
00: Active, UDP/IP
10: Unpassive
11: Fullpassive

(2) Example of sequence program

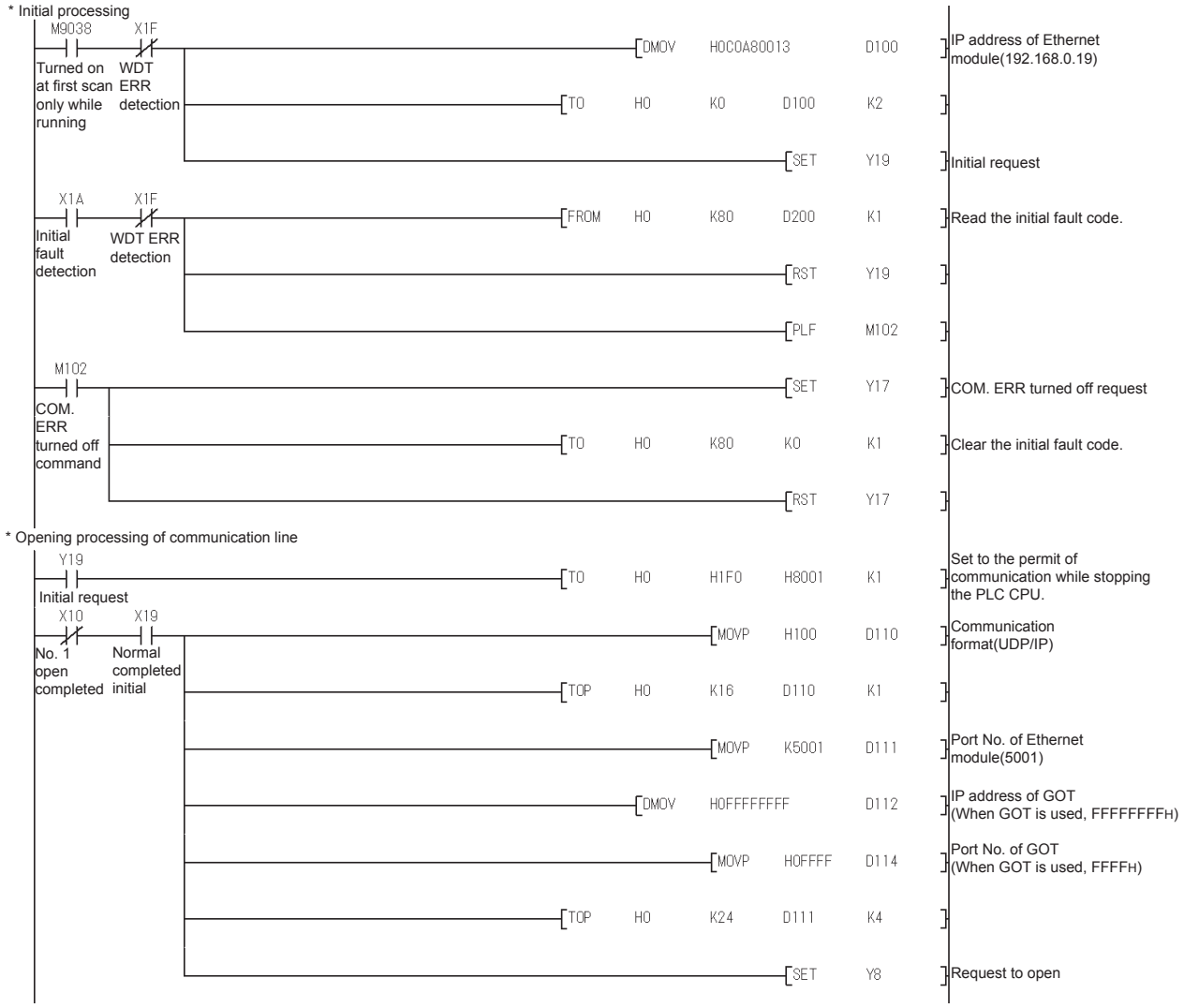

POINT

When changing the sequence program

After writing the sequence program to the PLC CPU, turn off and then on, or reset the PLC CPU.

(3) Communication confirmation

The RDY LED on the Ethernet module turns on when the module is ready to communicate.

For confirming the communication state, refer to the following.

☞ 23.4.7 ■ Confirming the communication state of Ethernet module

The BUF1 LED turns on when the opening processing of the connection No. 1 is completed in normal at executing of the sequence program example described at (2).

AJ71E71N3-T, AJ71E71N-B5, AJ71E71N-B2, AJ71E71N-T, AJ71E71N-B5T, AJ71E71-S3

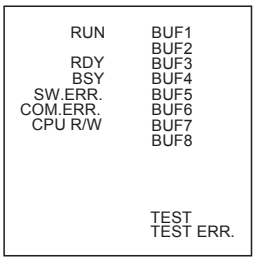

A1SJ71E71N3-T, A1SJ71E71N-B5, A1SJ71E71N-B2, A1SJ71E71N-T, A1SJ71E71N-B5T, A1SJ71E71-B5-S3, A1SJ71E71-B2-S3

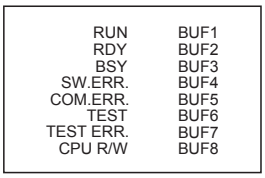

■ [Controller Setting] and [Ethernet] of GT Designer3

(1) Controller setting

Item	Setting (Use default value.)
GOT NET No.	1
GOT PLC No.	1
GOT IP Address	192.168.0.18
GOT Port No. (Communication)	5001
GOT Port No. (Ethernet Download)	5014
Default Gateway	0.0.0.0
Subnet Mask	255.255.255.0
Retry	3times
Startup Time	3sec
Timeout Time	3sec
Delay Time	0ms

(2) Ethernet setting

Item		Set value
Ethernet setting No.1	Host	*
	N/W No.	1
	PLC No.	2
	Type	AJ71E71
	IP Address	192.168.0.19
	Port No.	5001
	Communication	UDP (fixed)

POINT

[Controller Setting] and [Ethernet] of GT Designer3

For [Controller Setting] and [Ethernet] of GT Designer3, refer to the following.

☞ 23.3.1 Setting communication interface (Communication settings)

23.4.11 Connecting to Ethernet module (FX Series)

This section describes the settings of the GOT and Ethernet module (FX Series) in the following case of the system configuration.

POINT

Ethernet module (FX Series)

For details of the Ethernet module (FX Series), refer to the following manual.

FX3U-ENET-L User's manual

FX3U-ENET-ADP User's manual

■ System configuration

■ [Controller Setting] and [Ethernet] of GT Designer3

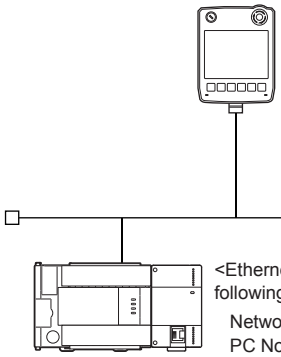

<GOT>
(The settings other than the following are set to the default)

PLC No.	: 1
IP address	: 192.168.0.18
Port No.	: 5019
Communication format	: TCP (fixed)

<Ethernet module> (The settings other than the following are set to the default)

Network No.	: 1 (virtual)*1
PC No.	: 2 (virtual)*1
IP address	: 192.168.0.19
Port No.	: 5551
Communication format	: TCP (fixed)

■ Ethernet parameter settings of FX3U-ENET-L Configuration tool

*1 These setting items do not exist on the PLC side. However, the virtual values must be set on the GOT side.

■ [Controller Setting] and [Ethernet] of GT Designer3

■ Ethernet parameter settings of FX3U-ENET-L Configuration tool

(1) Ethernet setting

Set the Ethernet parameter with FX3U-ENET-L Configuration tool.

For using FX3U-ENET-L Configuration tool, install GX-Developer Ver.8.88S or later on the personal computer.

For details on FX3U-ENET-L Configuration tool, refer to the following manual.

FX3U-ENET-L Configuration tool Operation manual

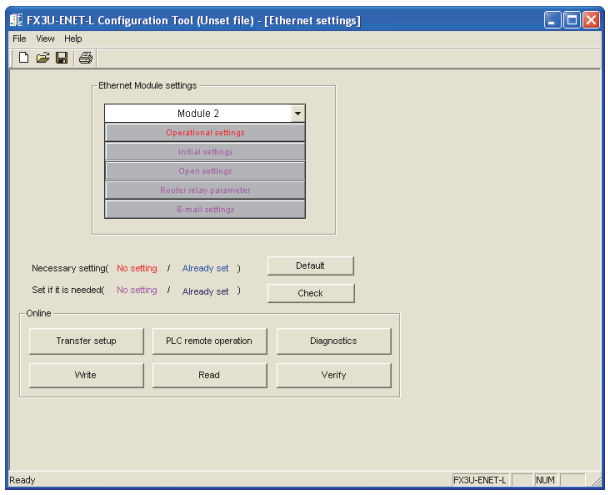

Item	Set value	Setting necessity at GOT connection
Module	Module 0*1	○
Operational settings	Refer to (2).	○
Initial settings	(Use default value)	×
Open settings	Refer to (3).	○
Router relay parameter	(Use default value)	×
E-mail settings		×

○: Necessary △: As necessary ×: Not necessary

*1 Set the number of the Ethernet module.

(2) Operational settings

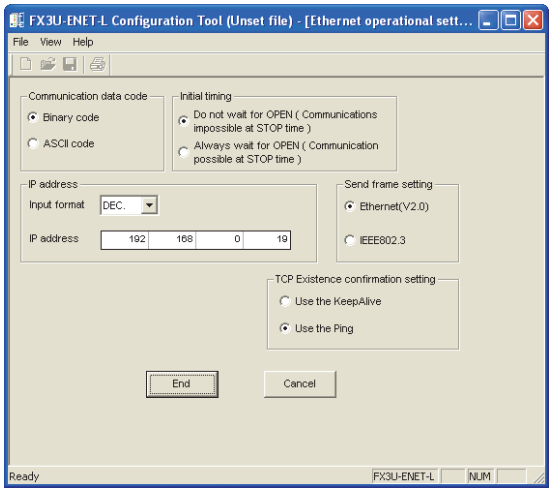

Item	Set value	Setting necessity at GOT connection
Communication data code*1	(Use default value)	×
IP address	192.168.0.19	○
Initial timing*1	(Use default value)	×
Send frame setting		×
TCP Existence confirmation setting		×

○: Necessary △: As necessary ×: Not necessary

*1 Because port No. 5551 is fixed, these items operate at the following setting without relations to the setting given here.
- Communication date code: [Binary code]
- Initial timing setting: [Always wait for OPEN] (Communication is available while the programmable controller CPU stops.)

POINT

When changing Ethernet parameter

After writing the Ethernet parameter to the PLC CPU, turn off and then on, or reset the PLC CPU.

(3) Open settings

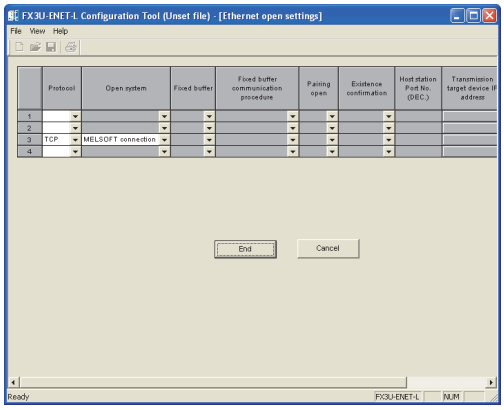

Item	Set value	Setting necessity at GOT connection
Protocol	TCP	○
Open system	MELSOFT connection	○
Fixed buffer	(Use default value)	×
Fixed buffer communication procedure		×
Pairing open		×
Existence check		×
Host station Port No. (DEC.)		×
Transmission target device IP address		×
Transmission target device Port No. (DEC.)		×

POINT

When connecting to multiple GOTs and peripheral devices

The number of protocols equivalent to that of the GOTs and devices must be set.

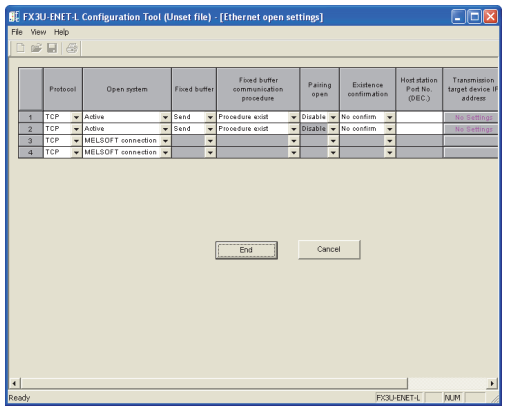

■ Ethernet parameter settings of FX3U-ENET-ADP

(1) Ethernet setting

Set the Ethernet parameter at [FX Parameter] on GX Works2.

To set FX3U-ENET-ADP, GX Works2 Ver.1.90U or later is required.

For details on the setting of FX3U-ENET-ADP, refer to the following manual.

FX3U-ENET-ADP USER'S MANUAL

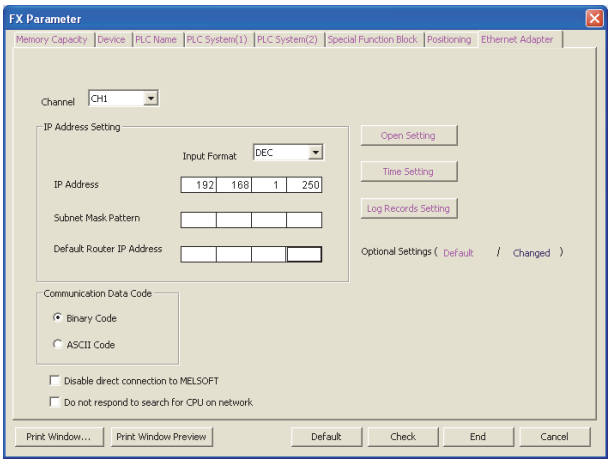

Item	Set value	Setting necessity at GOT connection
Channel	CH1 or CH2*1	×
IP address	192.168.1.250*2	○
Open Setting	Refer to (2).	○
Communication Data Code	(Use default value)	×
Disable direct connection to MELSOFT		×
Do not respond to search for CPU on network		×

○: Necessary △: As necessary ×: Not necessary

*1 Set a channel according to the installation position of FX3U-ENET-ADP on the CPU body.

*2 The default value of IP address is 192.168.1.250. Set the IP address according to the system configuration.

POINT

When changing Ethernet parameter

After writing Ethernet parameters to the PLC CPU, turn the PLC CPU OFF then back ON again.

(2) Open Setting

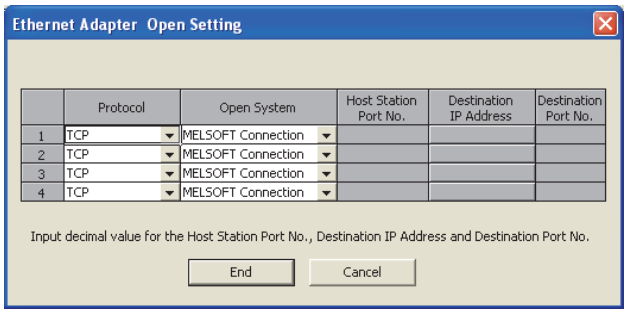

Item	Set value	Setting necessity at GOT connection
Protocol	TCP	○
Open System	MELSOFT Connection	○

POINT

When connecting to multiple GOTs and peripheral devices

The number of protocols equivalent to that of the GOTs and devices must be set.

■ [Controller Setting] and [Ethernet] of GT Designer3

(1) Controller setting

Item	Setting (Use default value.)
GOT NET No.	1
GOT PLC No.	1
GOT IP Address	192.168.0.18
GOT Port No. (Communication)	5019
GOT Port No. (Ethernet Download)	5014
Default Gateway	0.0.0.0
Subnet Mask	255.255.255.0
Retry	3times
Startup Time	3sec
Timeout Time	3sec
Delay Time	0ms

(2) Ethernet setting

Item		Set value
Ethernet setting No.1	Host	*
	N/W No.	1 (Use default value)
	PLC No.	2
	Type	FX (fixed)
	IP Address	192.168.0.19*1
	Port No.	5551 (fixed)*2
	Communication	TCP (fixed)

*1 Set the value according to the IP address of the connected PLC.

*2 Set the value according to the port No. of the connected PLC.
For details, refer to the following.
☞ 23.3.3 Ethernet setting

POINT

[Controller Setting] and [Ethernet] of GT Designer3

For [Controller Setting] and [Ethernet] of GT Designer3, refer to the following.

☞ 23.3.1 Setting communication interface (Communication settings)

■ Confirming the communication state of Ethernet module

(1) When using the Command Prompt of Windows®
Execute a Ping command at the Command Prompt of Windows®.

(a) When normal communication
C:\>Ping 192.168.0.19
Reply from 192.168.0.19: bytes=32 time<1ms TTL=64

(b) When abnormal communication
C:\>Ping 192.168.0.19
Request timed out.

(2) When abnormal communication
At abnormal communication, check the followings and execute the Ping command again.

- Mounting condition of Ethernet module
- Cable connecting condition
- Confirmation of switch and network parameter setting
- Operation state of PLC CPU (faulty or not)
- IP address of GOT specified by Ping command

POINT

Ethernet diagnostics of FX3U-ENET-L Configuration tool

Ethernet diagnostics of FX3U-ENET-L configuration tool is available to a Ping test from the PLC.
For details on Ethernet diagnostics of FX3U-ENET-L Configuration tool, refer to the following manual.

☞ FX3U-ENET-L Configuration tool Operation manual

23.4.12 Connecting to Built-in Ethernet port FXCPU (FX3GE)

This section describes the settings of the GOT and Ethernet module (FX Series) in the following case of the system configuration.

POINT

FX3GE

For details of the FX3GE, refer to the following manual.

FX3GE SERIES PROGRAMMABLE CONTROLLERS HARDWARE MANUAL

■ System configuration

■ [Controller Setting] and [Ethernet] of GT Designer3

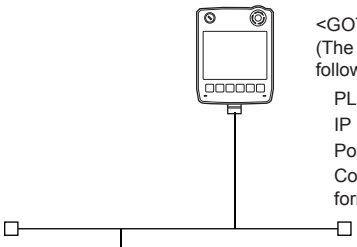

<GOT>
(The settings other than the following are set to the default)

PLC No.	: 1
IP address	: 192.168.0.18
Port No.	: 5019
Communication format	: TCP (fixed)

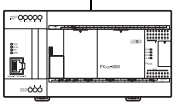

<Ethernet module> (The settings other than the following are set to the default)

Network No.	: 1 (virtual)*1
PC No.	: 2 (virtual)*1
IP address	: 192.168.0.19
Port No.	: 5556 (fixed)
Communication format	: TCP (fixed)

■ Ethernet parameter setting of FX3GE

*1 These setting items do not exist on the PLC side. However, the virtual values must be set on the GOT side.

■ [Controller Setting] and [Ethernet] of GT Designer3

■ Ethernet parameter setting of FX3GE

(1) Ethernet setting

Set the Ethernet parameter at [FX Parameter] on GX Works2.

To set FX3GE, GX Works2 Ver.1.91V or later is required.

For details on the setting of FX3GE, refer to the following manual.

FX3GE SERIES PROGRAMMABLE CONTROLLERS HARDWARE MANUAL

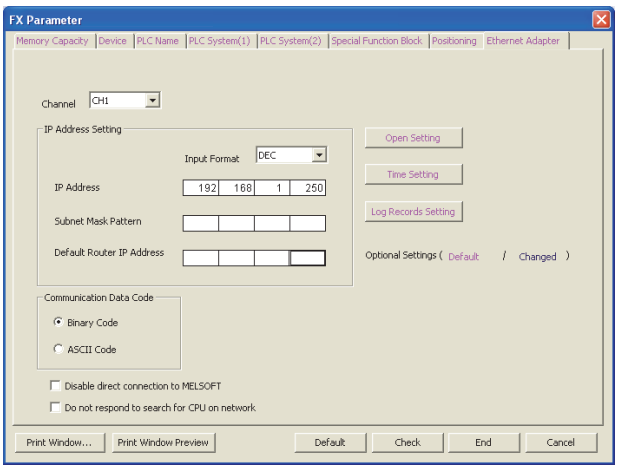

Item	Set value	Setting necessity at GOT connection
Channel	CH1 or CH2	×
IP address	192.168.1.250*1	○
Open Setting	Refer to (2).	○
Communication Data Code	(Use default value)	×
Disable direct connection to MELSOFT		×
Do not respond to search for CPU on network		×

○: Necessary △: As necessary ×: Not necessary

*1 The default value of IP address is 192.168.1.250. Set the IP address according to the system configuration.

POINT

When changing Ethernet parameter

After writing Ethernet parameters to the PLC CPU, turn the PLC CPU OFF then back ON again.

(2) Open Setting

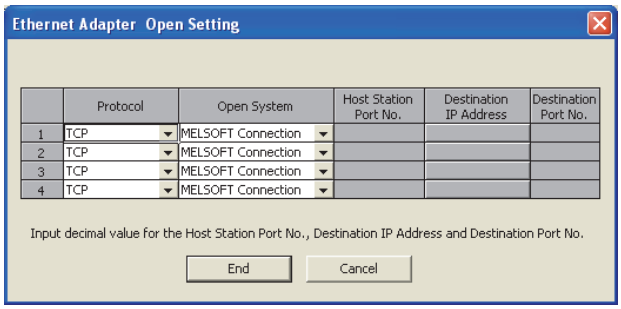

Item	Set value	Setting necessity at GOT connection
Protocol	TCP	○
Open System	MELSOFT Connection	○

POINT

When connecting to multiple GOTs and peripheral devices

The number of protocols equivalent to that of the GOTs and devices must be set.

■ [Controller Setting] and [Ethernet] of GT Designer3

(1) Controller setting

Item	Setting (Use default value.)
GOT NET No.	1
GOT PLC No.	1
GOT IP Address	192.168.0.18
GOT Port No. (Communication)	5019
GOT Port No. (Ethernet Download)	5014
Default Gateway	0.0.0.0
Subnet Mask	255.255.255.0
Retry	3times
Startup Time	3sec
Timeout Time	3sec
Delay Time	0ms

(2) Ethernet setting

Item		Set value
Ethernet setting No.1	Host	*
	N/W No.	1 (Use default value)
	PLC No.	2
	Type	FX (fixed)
	IP Address	192.168.0.19*1
	Port No.	5556 (fixed)*2
	Communication	TCP (fixed)

*1 Set the value according to the IP address of the connected PLC.

*2 Set the value according to the port No. of the connected PLC.
For details, refer to the following.

23.3.3 Ethernet setting

POINT

[Controller Setting] and [Ethernet] of GT Designer3

For [Controller Setting] and [Ethernet] of GT Designer3, refer to the following.

23.3.1 Setting communication interface (Communication settings)

■ Confirming the communication state of Ethernet module

(1) When using the Command Prompt of Windows®
Execute a Ping command at the Command Prompt of Windows®.

(a) When normal communication
C:\>Ping 192.168.0.19
Reply from 192.168.0.19: bytes=32 time<1ms
TTL=64

(b) When abnormal communication
C:\>Ping 192.168.0.19
Request timed out.

(2) When abnormal communication
At abnormal communication, check the followings and execute the Ping command again.
- Mounting condition of Ethernet module
- Cable connecting condition
- Confirmation of switch and network parameter setting
- Operation state of PLC CPU (faulty or not)
- IP address of GOT specified by Ping command

23.4.13 Connecting to Display I/F (CNC C70)

This section describes the settings of the GOT and Display I/F (CNC C70) in the following case of the system configuration.

POINT

Display I/F (CNC C70)
For details of the Display I/F (CNC C70), refer to the following manual.
☞ C70 Series SET UP MANUAL

■ System configuration

☞ ■ [Controller Setting] and [Ethernet] of GT Designer3

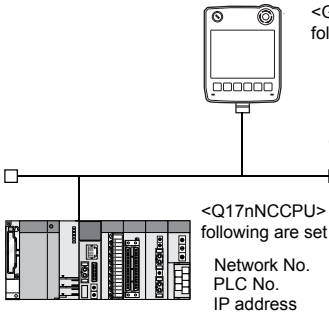

<GOT> (The settings other than the following are set to the default)
Network No. : 1
PLC No. : 1
IP address : 192.168.0.18
Port No. : 5001
Communication format : UDP (fixed)

<Q17nNCCPU> (The settings other than the following are set to the default)
Network No. : 239
PLC No. : 2
IP address : 192.168.0.19
Port No. : 5001
Communication format : UDP(fixed)

☞ ■ Ethernet parameter settings of FX3U-ENET-L Configuration tool

■ IP address settings of CNC C70

(1) Remote monitor tool

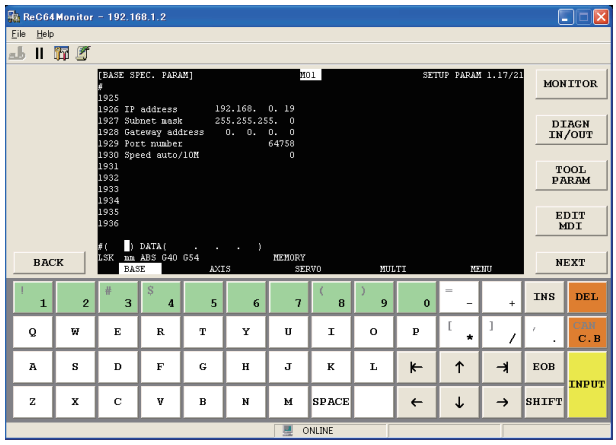

Item	Set value	Setting necessity at GOT connection
IP address	192.168.0.19	○
Subnet mask	255.255.255.0	○
Gateway address	0.0.0.0	○
Port number	64758 (fixed)	○
Speed auto/10M	0 (fixed)	○

○: Necessary △: As necessary ×: Not necessary

(2) Communication confirmation
The CNC C70 can communicate with the GOT when INIT.LED of the CNC C70 is lit.
For confirming the communication state, refer to the following.

☞ ■ Checking communication state of CNC C70

■ [Controller Setting] and [Ethernet] of GT Designer3

(1) Controller setting

Item	Setting (Use default value.)
GOT NET No.	1
GOT PLC No.	1
GOT IP Address	192.168.0.18
GOT Port No. (Communication)	5001
GOT Port No. (Ethernet Download)	5012
Default Gateway	0.0.0.0
Subnet Mask	255.255.255.0
Retry	3times
Startup Time	3sec
Timeout Time	3sec
Delay Time	0ms

(2) Ethernet setting

Item		Set value
Ethernet setting No.1	Host	*
	N/W No.	1
	PLC No.	2
	Type	Q17nNC
	IP Address	192.168.0.19
	Port No.	5001 (fixed)
	Communication	UDP (fixed)

POINT

[Controller Setting] and [Ethernet] of GT Designer3
For [Controller Setting] and [Ethernet] of GT Designer3, refer to the following.

☞ 23.3.1 Setting communication interface (Communication settings)

■ Checking communication state of CNC C70

(1) When using the Command Prompt of Windows®
Execute a Ping command at the Command Prompt of Windows®.

(a) When normal communication
C:\>Ping 192.168.0.19
Reply from 192.168.0.19: bytes=32 time<1ms TTL=64

(b) When abnormal communication
C:\>Ping 192.168.0.19
Request timed out.

(2) When abnormal communication
At abnormal communication, check the followings and execute the Ping command again.
- Mounting condition of CNC C70
- Cable connecting condition
- Confirmation of switch and network parameter setting
- Operation state of PLC CPU (faulty or not)
- IP address of the CNC C70 specified for the Ping command

23.4.14 Connecting to CC-Link IE Field Network Ethernet adapter module

This section describes the settings of the GOT, the Ethernet adapter module, and PLC side in the following system configuration.

■ System configuration

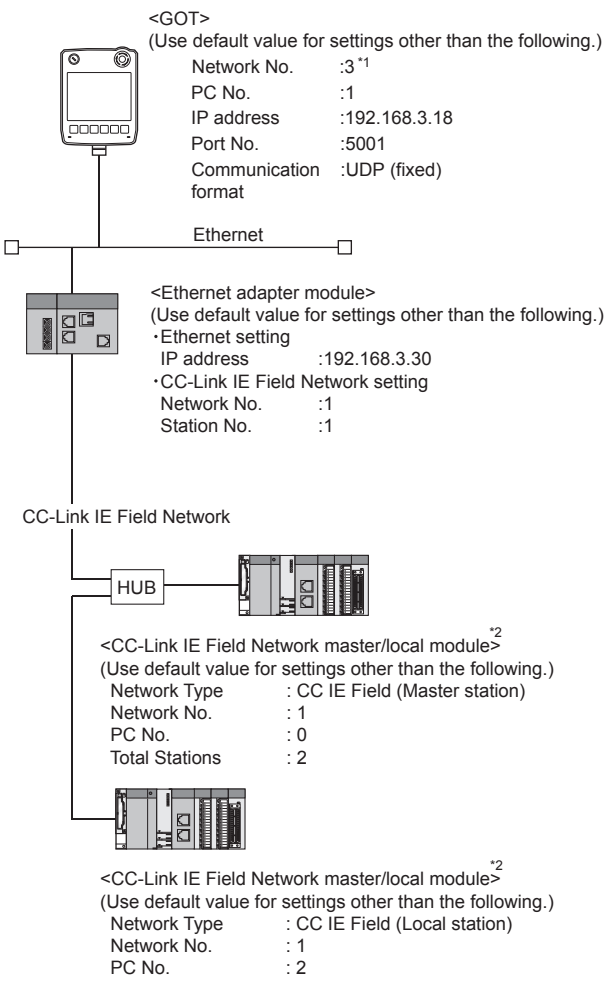

*1 Set the GOT network No. according to the third octet (network No.) of the Ethernet adapter module IP address.

*2 The CC-Link IE field network master/local module is mounted on slot 0 of the base unit.
The start I/O No. of the CC-Link IE field network master/local module is set at [0].

■ GX Works2 network parameter Ethernet/CC IE/MELSECNET

For detailed settings on the PLC side, refer to the following manual.

MELSEC-Q CC-Link IE Field Network Master/ Local Module User's Manual

(1) Setting of Network Type, Network No., and total stations

Example: Master station setting

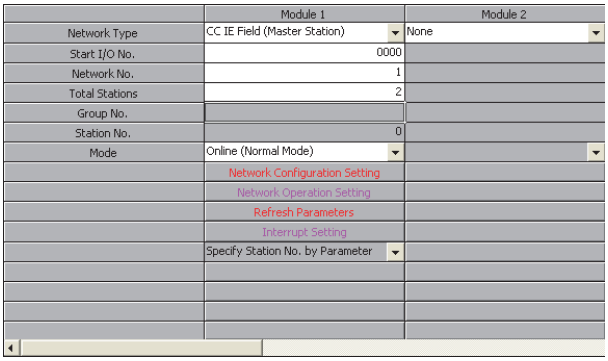

Item	Set value	
	Master station	Local station
Network Type	CC IE Field (Master Station)	CC IE Field (Local Station)
Network No.	1	1
Total Stations	2	-
Station No.	0 (fixed)	2

(2) Routing parameter setting

Set the followings as necessary.
Up to 64 [Transfer Network No.]s can be set.
However, the same transfer network number cannot be set twice or more (multiple times).
Therefore, the one that can access to other station from the request source host GOT is 64 kinds of [Transfer Network No.]s.

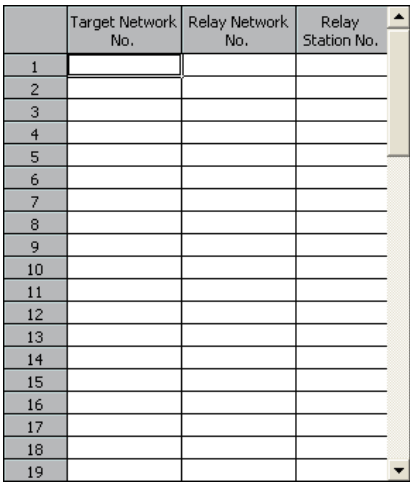

Item	Range
Target Network No.	1 to 239
Relay Network No.	1 to 239
Relay Station No.	1 to 64

■ Ethernet adapter module setting

Set the parameter with the Ethernet adapter module setting tool.

(1) CC-Link IE field Network settings

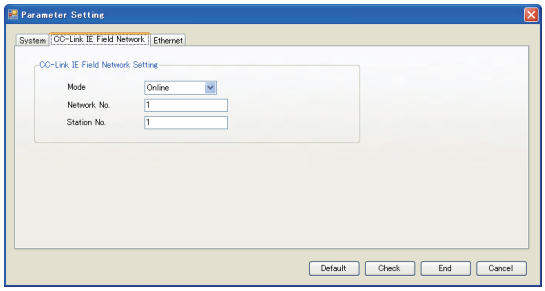

Item	Set value
Network No.	1*1
Station No.	1*2

*1 Set the same value as the network No. set on the PLC side.
*2 Set a value other than the network No. set on the PLC side.

(2) Ethernet setting

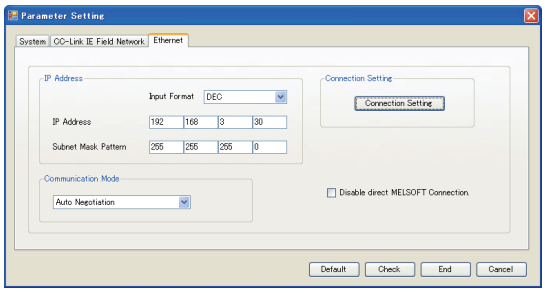

Item	Set value
IP Address	192.168.3.30*1

*1 Set the IP address within the following range.

192.168.3.30

Set the fourth octet within the range from 1 to 64.

Set the third octet within the range from 1 to 239.

■ [Controller Setting] and [Ethernet] of GT Designer3

POINT

[Controller Setting] and [Ethernet] of GT Designer3

For [Controller Setting] and [Ethernet] of GT Designer3, refer to the following.

☞ 23.3.1 Setting communication interface (Communication settings)

(1) Controller setting

Item	Set value (Use default value.)
GOT NET No.	3*1
GOT PLC No.	1
GOT IP Address	192.168.3.18
GOT Port No. (Communication)	5001
GOT Port No. (Ethernet Download)	5014
Default Gateway	0.0.0.0
Subnet Mask	255.255.255.0
Retry	3times
Startup Time	3sec
Timeout Time	3sec
Delay Time	0ms

*1 Set the GOT network No. according to the third octet (network No.) of the Ethernet adapter module IP address.

(2) Ethernet setting

Item		Set value
Ethernet setting No.1	Host	*
	N/W No.	3*1
	PLC No.	30*2
	Type	QJ71E71
	IP Address	192.168.3.30*3
	Port No.	5001 (fixed)
	Communication	UDP (fixed)

*1 Set according to the third octet (network No.) of the Ethernet adapter module IP address.
*2 Set according to the fourth octet (PLC No.) of the Ethernet adapter module IP address.
*3 Set according to the Ethernet adapter module IP address.

(3) Routing parameter setting

Item	Set value
Target network No.	1*1
Relay network No.	3*2
Relay station No.	30*3

*1 Set the same value as the Ethernet adapter module network No.
*2 Set according to the third octet (PLC No.) of the Ethernet adapter module IP address.
*3 Set according to the fourth octet (PLC No.) of the Ethernet adapter module IP address.

23.4.15 Connecting to PERIPHERAL I/F (Built-in Ethernet port Motion Controller CPU)

This section describes the settings of the GOT and Built-in Ethernet port motion controller CPU in the following case of system configuration.

POINT

(1) GOT type setting
For details, refer to the following.

GOT1000 Series Connection Manual for GT Works3
1.1.1 Setting connected equipment (Channel setting)
(2) Setting [Controller Type]

(2) CPU No. specification of Q170MCPU
Set whether to monitor the PLC CPU area or the Motion CPU area of Q170MCPU, in the CPU No. specification. For details, refer to the following.

23.5 Precautions

(3) PLC type of GX Works2/GX Developer
When creating a program, set the following PLC type:
• For Q173D(S)CPU/Q172D(S)CPU
QnUD(E)(H)CPU
• For Q170MCPU
Q03UDCPU

(4) Built-in Ethernet port CPU
For details of Built-in Ethernet port CPU, refer to the following manual.

User's Manual of Q173D(S)CPU/Q172D(S)CPU, and Q170MCPU

■ System configuration

Leave the Built-in Ethernet port Motion Controller CPU settings as default in the following system configuration. Set [Ethernet] for [Controller Setting] on GT Designer3, and then connect Built-in Ethernet port QCPU to the GOT.

■ [Controller Setting] and [Ethernet] of GT Designer3

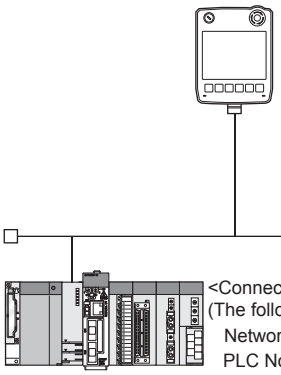

<GOT>
(The settings other than the following are set to the default)
Network No. : 1
PLC No. : 1
IP address : 192.168.3.1
Port No. : 5001
Communication format : UDP (fixed)

<Connecting to Built-in Ethernet port CPU> *1
(The following settings are set to the default)
Network No. : 1 (virtual)*2
PLC No. : 2 (virtual)*2
IP address : 192.168.3.39
Open system : MELSOFT connection (fixed)

*1 For the settings when using system devices including a hub and a transceiver, refer to the following.

23.4.6 Connecting to Built-in Ethernet port CPU (multiple connection)

*2 These setting items do not exist on the PLC side. However, the virtual values must be set on the GOT side.

■ [Controller Setting] and [Ethernet] of GT Designer3

■ Basic setting of MT Works2

Use the default values of the basic setting for the system configuration above.

(1) Built-in Ethernet Port Setting

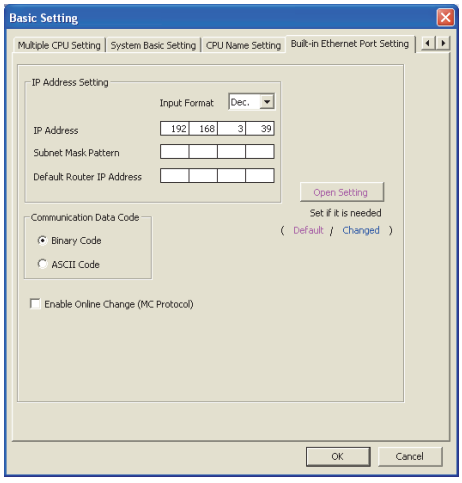

Item	Set value	Setting necessity at GOT connection
IP Address	192.168.3.39 (Default)	○
Subnet Mask Pattern	-	×
Default Router IP Address	-	×

Item	Set value	Setting necessity at GOT connection
Communication Data Code	(Use default value)	△
Enable online change (MC protocol)		△
Open settings	Refer to (2).	○

○: Necessary △: As necessary ×: Not necessary

(2) Open settings

The setting is required for all the connected GOTs.

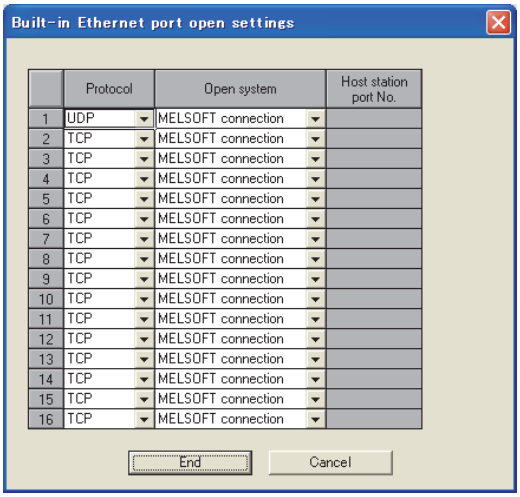

Item	Set value
Protocol	UDP (fixed)
Open system	MELSOFT connection (fixed)
Host station port No.	-

■ [Controller Setting] and [Ethernet] of GT Designer3

POINT

(1) [Controller Setting] and [Ethernet] of GT Designer3

For [Controller Setting] and [Ethernet] of GT Designer3, refer to the following.

☞ 23.3.1 Setting communication interface (Communication settings)

(2) Ethernet setting

The setting items for the network No. and station No. do not exist on the Built-in Ethernet port Motion Controller CPU side. However, these virtual values must be set on the GOT side. Therefore, set the network No. and station No. on the GOT side.

Set a network No. that does not exist on the network system.

(3) Controller setting

Item	Setting (Use default value.)
GOT NET No.	1
GOT PLC No.	1
GOT IP Address	192.168.3.1
GOT Port No. (Communication)	5001
GOT Port No. (Ethernet Download)	5014
Default Gateway	0.0.0.0
Subnet Mask	255.255.255.0
Retry	3times
Startup Time	3sec
Timeout Time	3sec
Delay Time	0ms

(4) Ethernet setting

Item		Set value
Ethernet setting No.1	Host	*
	N/W No.	1*1
	PLC No.	2*2
	Type	QnUDE(H)
	IP Address	192.168.3.39*3
	Port No.	5006 (fixed)
	Communication	UDP (fixed)

*1 Set the same value as that of GOT N/W No.
*2 Set a value different from that of GOT PLC No.
*3 Set it to the IP address value of the Built-in Ethernet port Motion Controller CPU side.

■ Checking communication state of Built-in Ethernet port CPU

(1) When using the Command Prompt of Windows®

Execute a Ping command at the Command Prompt of Windows®.

(a) When normal communication

C:\>Ping 192.168.3.39
Reply from 192.168.3.39: bytes=32 time <10ms TTL=32

(b) When abnormal communication

C:\>Ping 192.168.3.39
Request timed out.

(2) When abnormal communication

At abnormal communication, check the followings and execute the Ping command again.

- Cable connecting condition
- Confirmation of switch and network parameter setting
- Operation state of PLC CPU (faulty or not)
- The IP address of Built-in Ethernet port CPU specified in the Ping command

POINT

Ethernet diagnostics of GX Works2/GX Developer

Ethernet diagnostics of GX Works2/GX Developer is available to a Ping test from the PLC.
For details of Ethernet diagnostics of GX Works2/GX Developer, refer to the following manual.

☞ GX Works2 Version 1 Operating Manual (Common)

☞ GX Developer Version 8 Operating Manual

23.5 Precautions

■ Connection to QnA (S) CPU type

Use B or a later function version of Ethernet module (QnA Series) and PLC CPU (QnA/QnASCPU type).

■ Connection to QSCPU

The GOT can only read device data and sequence programs by the ladder monitor function in the QSCPU.

The GOT cannot write any data to the QSCPU.

■ Connection to Q170MCPU

The CPU to be monitored can be selected by the [CPU No.] setting in the device settings.

(1) When the CPU No. is set to "2"
The device of the Motion Controller CPU area (CPU No.2) is monitored.

(2) When the CPU No. is set to "1"
The device of the PLC CPU area (CPU No.1) is monitored.

(3) When the CPU No. is set to "0"
The monitoring target differs depending on the GOT connection destination.

GOT connection destination	Monitoring target
QJ71E71	PLC CPU area (CPU No.1)
PERIPHERAL I/F	Motion CPU area (CPU No.2)

When the setting of CPU No. is set to the number other than "0" to "2", a communication error occurs and the monitoring cannot be executed.

For setting the CPU No., refer to the following manual.

GT Designer3 Version1 Screen Design Manual

Example) Setting dialog box of the bit device

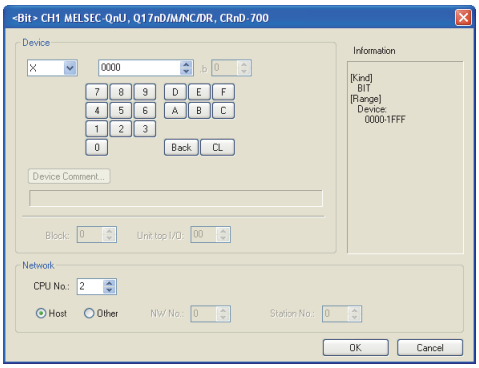

■ Connection in the multiple CPU system

When the GOT is connected to multiple CPU system, the following time is taken until when the PLC runs.

QCPU (Q mode), motion controller CPU (Q series): 10 seconds or more
MELDAS C70: 18 seconds or more

When the GOT starts before the PLC runs, a system alarm occurs. Adjust the opening screen time in the GOT setup so that no system alarm occurs.

GT Designer3 Version1 Screen Design Manual

■ Connection to LCPU

LCPU may diagnose (check file system, recovering process, etc.) the SD memory card when turning on the power or when resetting.
Therefore, it takes time until the SD memory card becomes available. When the GOT starts before the SD card becomes available, a system alarm occurs. Adjust the opening screen time in the GOT setup so that no system alarm occurs.

GT Designer3 Version1 Screen Design Manual

■ When connecting to multiple GOTs

(1) Setting PLC No.
When connecting two or more GOTs in the Ethernet network, set each [PLC No.] to the GOT.

23.3.1 Setting communication interface (Communication settings)

(2) Setting IP address
Do not use the IP address "192.168.0.18" when using multiple GOTs.
A communication error may occur on the GOT with the IP address.

(3) Setting for starting up multiple GOTs simultaneously (When connected to Built-in Ethernet port CPU)
When connecting multiple GOTs to one Built-in Ethernet port CPU, adjust the timing of GOT communication start.
When the communication concentrates on the PLC, the communication between GOT and PLC becomes difficult, and the monitoring by GOT may not start.
As a method for adjusting the timing, communicating one GOT alone first, and then communicating the other GOTs is effective.
Set the following items on each GOT.
• [Startup Time] of [Controller Setting], or [Title Display Time] of [GOT Setup].
• [Timeout Time] of [Controller Setting]
The following shows a setting example.

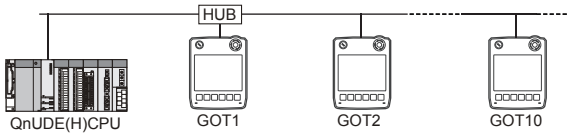

Item	GOT1	GOT2	GOT10
Startup Time	0sec (default)	1sec	1sec
Timeout Time	3sec (default)	4sec	4sec

■ When connecting to the multiple network equipment (including GOT) in a segment

By increasing the network load, the transmission speed between the GOT and PLC may be reduced.
The following actions may improve the communication performance.
• Using a switching hub
• More high speed by 100BASE-TX (100Mbps)
• Reduction of the monitoring points on GOT

When setting IP address

Do not use "0" and "255" at the end of an IP address.

(Numbers of *.*.*.0 and *.*.*.255 are used by the system)

The GOT may not monitor the controller correctly with the above numbers.

Consult with the administrator of the network before setting an IP address to the GOT and controller.

When monitoring to another network No. on the same line

When the network No. of the GOT does not match with that of the PLC on the same Ethernet, the PLC cannot be monitored. When monitoring, set the same network No. as that of the GOT, or connect a Ethernet module to the PLC and set the routing setting to monitor as other network.
Use the multi-channel function to set each channel with the network No. to be monitored.

When connecting to Built-in Ethernet port of Built-in Ethernet port CPU

Connect a GOT after turning ON the power of the network equipment such as a Built-in Ethernet port CPU or a HUB to enable the communication.
When the communication with the Built-in Ethernet port CPU is not available, a communication error may occur on the GOT.

Remote password for QCPU

Do not set a remote password for QCPU.
Monitoring with GOT becomes unavailable.

The number of connectable CPUs for one GOT

QCPU: 128 CPUs can be set (10 or less CPUs are recommended)
FXCPU: 128 CPUs can be set (10 or less CPUs are recommended)

Connection to RnSFCPU

The RnSFCPU takes 10 seconds or more to run.
If the GOT is started before the RnSFCPU runs, a system alarm occurs.
To prevent a system alarm from occurring, adjust the title display time in the [GOT Setup] dialog.

☞ GT Designer3 Version□ Screen Design Manual

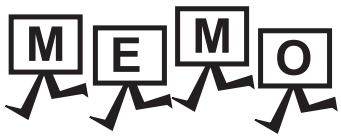
MEMO

24. CC-Link CONNECTION (Via G4)

24.1 Connectable Model List

24.1.1 PLC/Motion controller CPU

The following table shows the connectable models.

Series	Model	Clock	Communication type	GT14 Handy	Refer to
MELSEC iQ-R Series	R04CPU	○	CC-Link(G4)	×	-
	R08CPU				
	R16CPU				
	R32CPU				
	R120CPU				
	R08PCPU				
	R16PCPU				
	R32PCPU				
	R120PCPU				
	R04ENCPU				
	R08ENCPU				
	R16ENCPU				
	R32ENCPU				
	R120ENCPU				
	R08SFCPU				
	R16SFCPU				
	R32SFCPU				
	R120SFCPU				
Motion controller CPU (MELSEC iQ-R Series)	R16MTCPU	○	CC-Link(G4)	×	-
	R32MTCPU				-
C Controller module (MELSEC iQ-R Series)	R12CCPU-V	○	CC-Link(G4)	×	-
MELSEC iQ-F Series	FX5U FX5UC	○	CC-Link(G4)	×	-

(Continued to next page)

Series	Model	Clock	Communication type	GT14 Handy	Refer to
MELSEC-Q (Q mode)	Q00JCPU	○	CC-Link (G4)	○	24.2.1
	Q00CPU*1				
	Q01CPU*1				
	Q02CPU*1				
	Q02HCPU*1 Q06HCPU*1 Q12HCPU*1 Q25HCPU*1				
	Q02PHCPU Q06PHCPU Q12PHCPU Q25PHCPU	○	CC-Link (G4)	○	
	Q12PRHCPU (Main base)				
	Q25PRHCPU (Main base)				
	Q12PRHCPU (Extension base)				
	Q25PRHCPU (Extension base)				
	Q00UJCPU	○	CC-Link (G4)	○	
	Q00UCPU Q01UCPU Q02UCPU				
	Q03UDCPU				
	Q04UDHCPU Q06UDHCPU Q10UDHCPU Q13UDHCPU Q20UDHCPU Q26UDHCPU				
	Q03UDECPU Q04UDEHCPU Q06UDEHCPU Q10UDEHCPU Q13UDEHCPU Q20UDEHCPU Q26UDEHCPU Q50UDEHCPU Q100UDEHCPU				
	Q03UDVCPU Q04UDVCPU Q06UDVCPU Q13UDVCPU Q26UDVCPU				
C Controller module (Q Series)	Q12DCCPU-V*2 Q24DHCCPU-V/VG Q24DHCCPU-LS Q26DHCCPU-LS	○	RS-232	○	24.2.1
MELSEC-QS	QS001CPU	○	-	×	-
MELSEC-L	L02CPU L06CPU L26CPU L26CPU-BT L02CPU-P L06CPU-P L26CPU-P L26CPU-PBT L02SCPU L02SCPU-P	○	CC-Link (G4)	○	24.2.2
MELSEC-Q (A mode)	Q02CPU-A Q02HCPU-A Q06HCPU-A	○	-	×	-
MELSEC-QnA (QnACPU)	Q2ACPU Q2ACPU-S1 Q3ACPU Q4ACPU Q4ARCPU	○	-	×	-
MELSEC-QnA (QnASCPU)	Q2ASCPU Q2ASCPU-S1 Q2ASHCPU Q2ASHCPU-S1	○	-	×	-
MELSEC-A (AnCPU)	A2UCPU A2UCPU-S1 A3UCPU A4UCPU A2ACPU A2ACPUP21 A2ACPUR21 A2ACPU-S1 A2ACPUP21-S1 A2ACPUR21-S1 A3ACPU A3ACPUP21 A3ACPUR21 A1NCPU A1NCPUP21 A1NCPUR21 A2NCPU A2NCPUP21 A2NCPUR21 A2NCPU-S1 A2NCPUP21-S1 A2NCPUR21-S1 A3NCPU A3NCPUP21 A3NCPUR21	○	-	×	-

(Continued to next page)

*1 For the multiple CPU system configuration, use CPU function version B or later.

*2 Use only modules with the upper five digits of the serial No. later than 12042.

Series	Model	Clock	Communication type	GT14 Handy	Refer to
MELSEC-A (AnSCPU)	A2USCPU	○	-	×	-
	A2USCPU-S1				
	A2USHCPU-S1				
	A1SCPU				
	A1SCPUC24-R2				
	A1SHCPU				
	A2SCPU				
	A2SHCPU				
	A1SJCPU				
	A1SJCPU-S3				
	A1SJHCPU				
MELSEC-A	A0J2HCPU	×	-	×	-
	A0J2HCPUP21				
	A0J2HCPUR21				
	A0J2HCPU-DC24				
	A2CCPU	○	-	×	-
	A2CCPUP21				
	A2CCPUR21				
	A2CCPUC24				
	A2CCPUC24-PRF				
	A2CJCPU-S3				
	A1FXCPU				
Motion controller CPU (Q Series)	Q172CPU*1*2	○	CC-Link (G4)	○	24.2.1
	Q173CPU*1*2				
	Q172CPUN*1				
	Q173CPUN*1				
	Q172HCPU				
	Q173HCPU				
	Q172DCPU				
	Q173DCPU				
	Q172DCPU-S1				
	Q173DCPU-S1				
	Q172DSCPU				
	Q173DSCPU				
	Q170MCPU*3				
	Q170MSCPU*4				
	Q170MSCPU-S1*4				
Motion controller CPU (A Series) controller CPU (A Series)	A273UCPU	○	-	×	-
	A273UHCPU				
	A273UHCPU-S3				
	A373UCPU				
	A373UCPU-S3				
	A171SCPU				
	A171SCPU-S3				
	A171SCPU-S3N				
	A171SHCPU				
	A171SHCPUN				
	A172SHCPU				
	A172SHCPUN				
	A173UHCPU				
	A173UHCPU-S1				
MELSEC-WS	WS0-CPU0	×	-	×	-
	WS0-CPU1				
	WS0-CPU3				

Series	Model	Clock	Communication type	GT14 Handy	Refer to
MELSECNET/H Remote I/O station	QJ72LP25-25	×	-	×	-
	QJ72LP25G				
	QJ72BR15				
CC-Link IE Field Network head module	LJ72GF15-T2	×	-	×	-
CC-Link IE field Network Ethernet adapter module	NZ2GF-ETB	×	-	×	-
CNC C70	Q173NCCPU	○	CC-Link (G4)	○	24.2.1
Robot controller	CRnQ-700 (Q172DRCPU) CR750-Q (Q172DRCPU) CR751-Q (Q172DRCPU)	○	CC-Link (G4)	○	24.2.1
MELSEC-FX	FX0, FX0S, FX0N FX1	×	-	×	-
	FX2, FX2C	×	-	×	
	FX1S, FX1N, FX2N, FX1NC	○	-	×	
	FX2NC	×	-	×	
	FX3S FX3G(C) FX3GE FX3U(C)	○		×	

*1 When using SV13, SV22, or SV43, use the motion controller CPU on which any of the following main OS version is installed.
- SW6RN-SV13Q□: 00H or later
- SW6RN-SV22Q□: 00H or later
- SW6RN-SV43Q□: 00B or later

*2 Use main modules with the following product numbers.
- Q172CPU: Product number N******* or later
- Q173CPU: Product number M******* or later

*3 Only the first step can be used on the extension base unit (Q52B/Q55B).

*4 The extension base unit (Q5□B/Q6□B) can be used.

24.1.2 CC-Link module/peripheral module

CPU series	Model name	
	CC-Link module	Peripheral module
MELSEC-Q (Q mode) C Controller module (Q Series) Motion controller CPU (Q Series) CNC C70 Robot controller (CRnQ-700)	QJ61BT11 QJ61BT11N	AJ65BT-G4-S3 AJ65BT-R2N
MELSEC-L	LJ61BT11	

24.2 System Configuration

24.2.1 Connecting to QCPU (Q mode)

Communication driver

CC-Link (G4)

(1) When using the connector conversion box

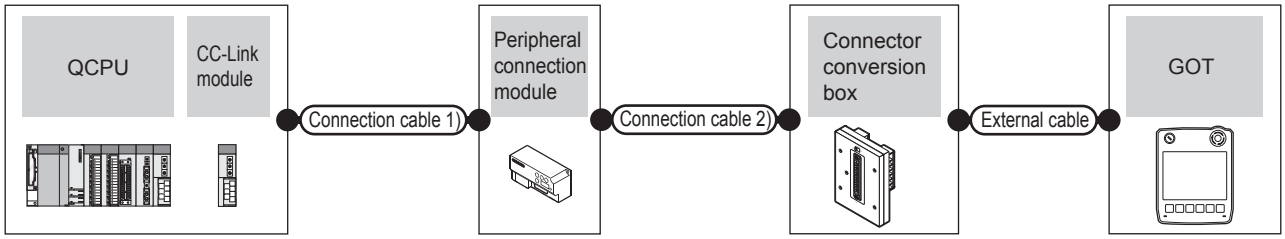

PLC		Connection cable 1)		Peripheral connection module		Connection cable 2)	Connector conversion box	External cable	GOT Model	Total distance *4	Number of connectable equipment
Model	CC-Link module*1	Cable model	Max. distance	Model	Communication type	Cable model Connection diagram number					
MELSEC-Q C Controller module (Q Series)	QJ61BT11 QJ61BT11N	CC-Link dedicated cable*2	*3	AJ65BT-R2N	RS-232	GT09C30R2-9P(3m) or User preparing RS232 connection diagram 1)	GT11H-CNB-37S	GT11H-C30-37P (3m)	GT14 Handy	6m	1 GOT for 1 peripheral connection module
				AJ65BT-G4-S3	RS-422	GT01-C30R4-25P(3m) GT01-C100R4-25P(10m)	GT11H-CNB-37S	GT11H-C30-37P (3m) GT11H-C60-37P (6m) GT11H-C100-37P (10m)	GT14 Handy	13m	

*1 For the system configuration of the CC-Link module, refer to the following manual.

CC-Link System Master/Local Module User's Manual QJ61BT11N

*2 For the specifications and inquiries of the CC-Link dedicated cable, refer to the following.

CC-Link Partner Association's home page: http://www.cc-link.org/

*3 The maximum overall extension cable length and the length between stations vary depending on the cable type to be used and the transmission speed.
For details, refer to the following manual.

CC-Link System Master/Local Module User's Manual QJ61BT11N

*4 The distance from the GOT to the peripheral connection module (Connection cable 2) + External cable)

(2) When using the external cable (GT11H-C□□□-37P)

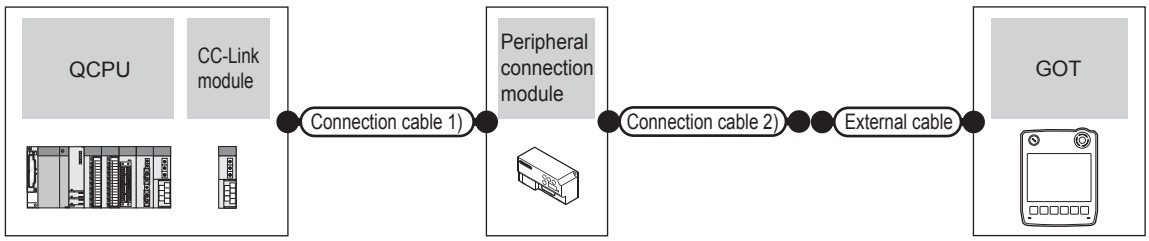

PLC		Connection cable 1)		Peripheral connection module		Connection cable 2)	External cable	GOT Model	Total distance *4	Number of connectable equipment
Model	CC-Link module*1	Cable model	Max. distance	Model	Communication type	Cable model Connection diagram number				
MELSEC-Q C Controller module (Q Series)	QJ61BT11 QJ61BT11N	CC-Link dedicated cable*2	*3	AJ65BT -R2N	RS-232	User preparing RS232 connection diagram 2)	GT11H-C30-37P (3m)	GT14 Handy	6m	1 GOT for 1 peripheral connection module

*1 For the system configuration of the CC-Link module, refer to the following manual.

CC-Link System Master/Local Module User's Manual QJ61BT11N

*2 For the specifications and inquiries of the CC-Link dedicated cable, refer to the following.

CC-Link Partner Association's home page: http://www.cc-link.org/

*3 The maximum overall extension cable length and the length between stations vary depending on the cable type to be used and the transmission speed.
For details, refer to the following manual.

CC-Link System Master/Local Module User's Manual QJ61BT11N

*4 The distance from the GOT to the peripheral connection module (Connection cable 2) + External cable)

(3) When using the external cable (GT11H-C□□□)

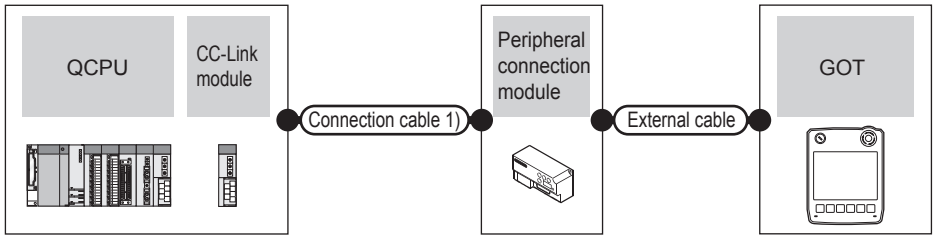

PLC		Connection cable 1)		Peripheral connection module		External cable	GOT Model	Total distance	Number of connectable equipment
Model	CC-Link module*1	Cable model	Max. distance	Model	Communication type				
MELSEC-Q C Controller module (Q Series)	QJ61BT11 QJ61BT11N	CC-Link dedicated cable*2	*3	AJ65BT -R2N	RS-232	GT11H-C30 (3m) GT11H-C60 (6m) User preparing RS232 connection diagram 3)	GT14 Handy	6m	1 GOT for 1 peripheral connection module

*1 For the system configuration of the CC-Link module, refer to the following manual.

CC-Link System Master/Local Module User's Manual QJ61BT11N

*2 For the specifications and inquiries of the CC-Link dedicated cable, refer to the following.

CC-Link Partner Association's home page: http://www.cc-link.org/

*3 The maximum overall extension cable length and the length between stations vary depending on the cable type to be used and the transmission speed.
For details, refer to the following manual.

CC-Link System Master/Local Module User's Manual QJ61BT11N

*4 The distance from the GOT to the peripheral connection module (Connection cable 2) + External cable)

24.2.2 Connecting to LCPU

Communication driver

CC-Link (G4)

(1) When using the connector conversion box

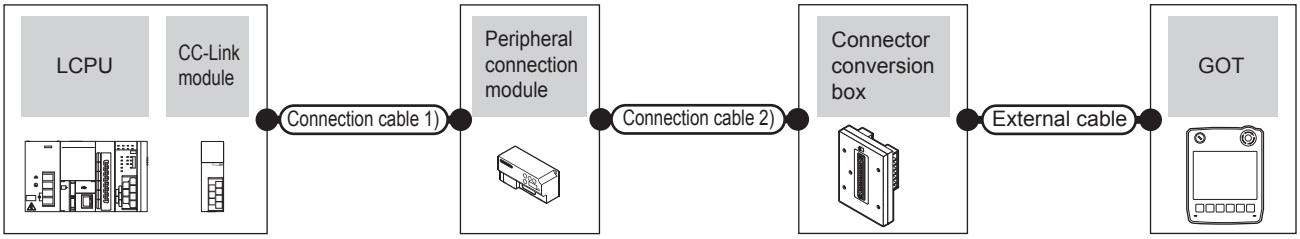

PLC		Connection cable 1)		Peripheral connection module		Connection cable 2)	Connector conversion box	External cable	GOT Model	Total distance *4	Number of connectable equipment
Model	CC-Link module*1	Cable model	Max. distance	Model	Communication type	Cable model Connection diagram number					
L02CPU L26CPU-BT L02CPU-P L26CPU-PBT	LJ61BT11	CC-Link dedicated cable*2	*3	AJ65BT-R2N	RS-232	GT09C30R2-9P(3m) or User preparing RS232 connection diagram 1)	GT11H-CNB-37S	GT11H-C30-37P (3m)	GT14 Handy	6m	1 GOT for 1 peripheral connection module
				AJ65BT-G4-S3	RS-422	GT01-C30R4-25P(3m) GT01-C100R4-25P(10m)	GT11H-CNB-37S	GT11H-C30-37P (3m) GT11H-C60-37P (6m) GT11H-C100-37P (10m)	GT14 Handy	13m	
L26CPU-BT L26CPU-PBT	-	CC-Link dedicated cable*2	*3	AJ65BT-R2N	RS-232	GT09C30R2-9P(3m) or User preparing RS232 connection diagram 1)	GT11H-CNB-37S	GT11H-C30-37P (3m)	GT14 Handy	6m	1 GOT for 1 peripheral connection module
				AJ65BT-G4-S3	RS-422	GT01-C30R4-25P(3m) GT01-C100R4-25P(10m)	GT11H-CNB-37S	GT11H-C30-37P (3m) GT11H-C60-37P (6m) GT11H-C100-37P (10m)	GT14 Handy	13m	

*1 For the system configuration of the CC-Link module, refer to the following manual.

MELSEC-L CC-Link System Master/Local Module User's Manual

*2 For the specifications and inquiries of the CC-Link dedicated cable, refer to the following.

CC-Link Partner Association's home page: http://www.cc-link.org/

*3 The maximum overall extension cable length and the length between stations vary depending on the cable type to be used and the transmission speed.
For details, refer to the following manual.

MELSEC-L CC-Link System Master/Local Module User's Manual

*4 The distance from the GOT to the peripheral connection module (Connection cable 2) + External cable)

(2) When using the external cable (GT11H-C□□□-37P)

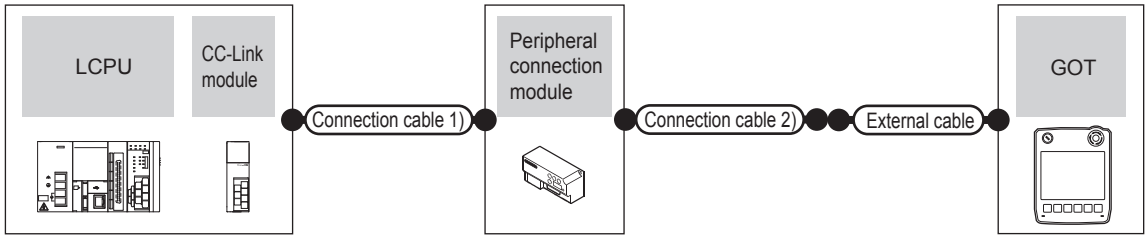

PLC		Connection cable 1)		Peripheral connection module		Connection cable 2)	External cable	GOT Model	Total distance *4	Number of connectable equipment
Model	CC-Link module*1	Cable model	Max. distance	Model	Communication type	Cable model Connection diagram number				
L02CPU L26CPU-BT L02CPU-P L26CPU-PBT	LJ61BT11	CC-Link dedicated cable*2	*3	AJ65BT-R2N	RS-232	User preparing RS232 connection diagram 2)	GT11H-C30-37P (3m)	GT14 Handy	6m	1 GOT for 1 peripheral connection module
L26CPU-BT L26CPU-PBT	-	CC-Link dedicated cable*2	*3	AJ65BT-R2N	RS-232	User preparing RS232 connection diagram 2)	GT11H-C30-37P (3m)	GT14 Handy	6m	1 GOT for 1 peripheral connection module

*1 For the system configuration of the CC-Link module, refer to the following manual.

MELSEC-L CC-Link System Master/Local Module User's Manual

*2 For the specifications and inquiries of the CC-Link dedicated cable, refer to the following.

CC-Link Partner Association's home page: http://www.cc-link.org/

*3 The maximum overall extension cable length and the length between stations vary depending on the cable type to be used and the transmission speed.
For details, refer to the following manual.

MELSEC-L CC-Link System Master/Local Module User's Manual

*4 The distance from the GOT to the peripheral connection module (Connection cable 2) + External cable)

(3) When using the external cable (GT11H-C□□□)

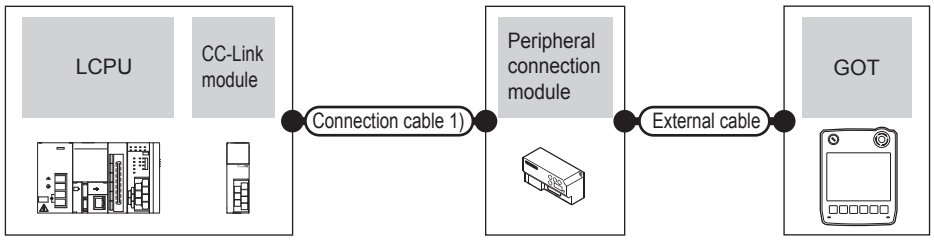

PLC		Connection cable 1)		Peripheral connection module		External cable	GOT Model	Total distance *4	Number of connectable equipment
Model	CC-Link module*1	Cable model	Max. distance	Model	Communication type				
L02CPU L26CPU-BT L02CPU-P L26CPU-PBT	LJ61BT11	CC-Link dedicated cable*2	*3	AJ65BT-R2N	RS-232	GT11H-C30 (3m) GT11H-C60 (6m) User preparing RS232 connection diagram 3)	GT14 Handy	6m	1 GOT for 1 peripheral connection module
L26CPU-BT L26CPU-PBT	-	CC-Link dedicated cable*2	*3	AJ65BT-R2N	RS-232	GT11H-C30 (3m) GT11H-C60 (6m) User preparing RS232 connection diagram 3)	GT14 Handy	6m	1 GOT for 1 peripheral connection module

24.3 Connection Diagram

The following diagram shows the connection between the GOT and the PLC.

24.3.1 RS-232 cable

■ Connection diagram

RS232 connection diagram 1)

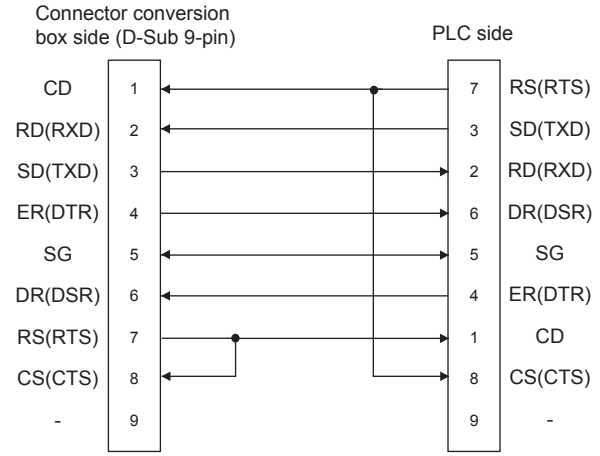

RS232 connection diagram 2)

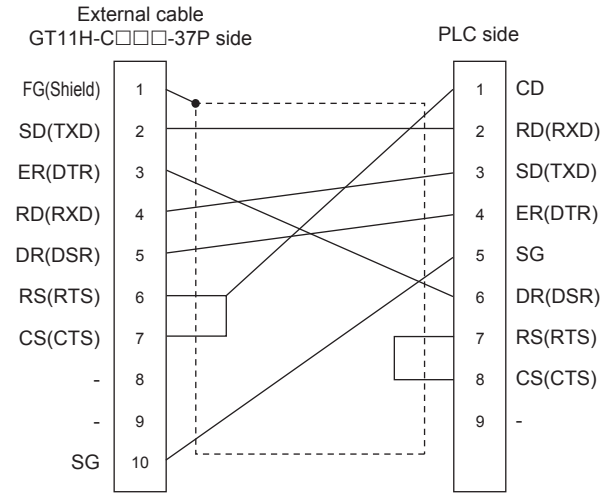

RS232 connection diagram 3)

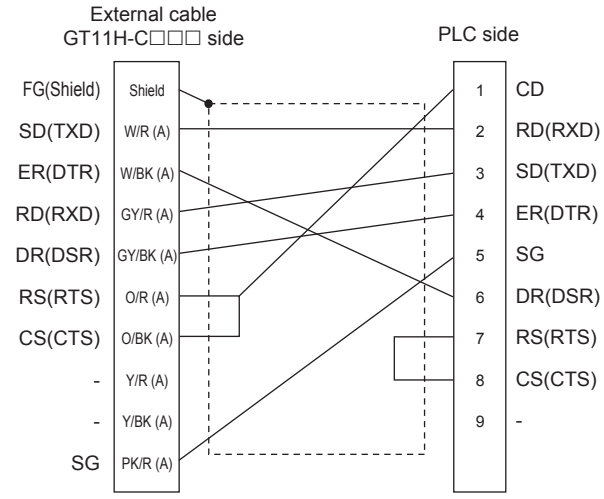

■ Precautions when preparing a cable

(1) Cable length

The total distance (between GOT and peripheral connection module) of the RS-232 cable must be 6m or less.

(2) External cable side connector

For the connector specifications of the external cable side, refer to the following.

☞ 8.2 External Cable, Relay Cable

24.4 GOT Side Settings

24.4.1 Setting communication interface (Communication settings)

Set the channel of the connected equipment.

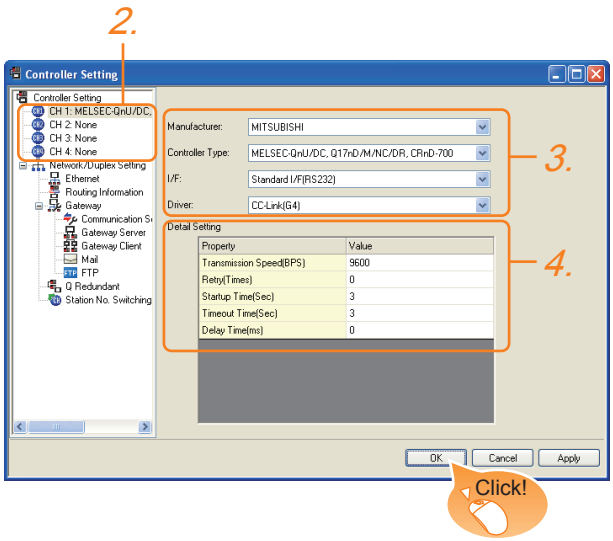

1. Select [Common] → [Controller Setting] from the menu.

2. The Controller Setting window is displayed. Select the channel to be used from the list menu.

3. Set the following items.
   - Manufacturer: Mitsubishi
   - Controller Type: Set according to the Controller Type to be connected.
   - I/F: Interface to be used
   - Driver: CC-Link (G4)

4. The detailed setting is displayed after Manufacturer, Controller Type, I/F, and Driver are set.
   Make the settings according to the usage environment.
   24.4.2 Communication detail settings

Click the OK button when settings are completed.

POINT

The settings of connecting equipment can be confirmed in [I/F Communication Setting].
For details, refer to the following.
18.1.2 I/F communication setting

24.4.2 Communication detail settings

Make the settings according to the usage environment.

Item	Description	Range
Transmission Speed	Set this item when change the transmission speed used for communication with the connected equipment. (Default: 9600bps)	9600bps, 19200bps, 38400bps 57600bps 115200bps
Retry	Set the number of retries to be performed when a communication error occurs. (Default: 0time)	0 to 5times
Timeout Time	Set the time period for a communication to time out. (Default: 3sec)	3 to 30sec
Delay Time	Set this item to adjust the transmission timing of the communication request from the GOT. (Default: 0ms)	0 to 300 (ms)

POINT

(1) Communication interface setting by Utility
The communication interface setting can be changed on the Utility's [Communication setting] after writing [Communication Settings] of project data.
For details on the Utility, refer to the following manual.
11. COMMUNICATION INTERFACE SETTING (COMMUNICATION SETTING)

(2) Precedence in communication settings
When settings are made by GT Designer3 or the Utility, the latest setting is effective.

HINT

Cutting the portion of multiple connection of the controller

By setting GOT internal device, GOT can cut the portion of multiple connection of the controller. For example, faulty station that has communication timeout can be cut from the system.

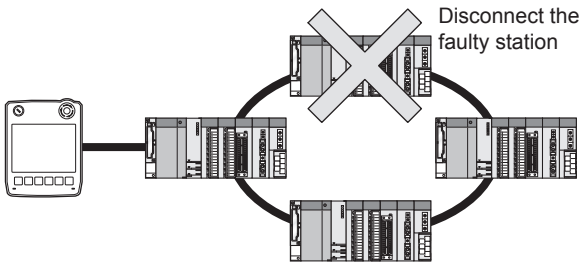

For details of the setting contents of GOT internal device, refer to the following manual.
GT Designer3 Version☐ Screen Design Manual (Fundamentals)

24.5 PLC Side Setting

Model		Reference
Peripheral connection module	AJ65BT-G4-S3	24.5.1
	AJ65BT-R2N	24.5.2
CC-Link module	QJ61BT11 QJ61BT11N	24.5.3

24.5.1 Connecting AJ65BT-G4-S3

This section describes the settings of the GOT and peripheral connection module in the following case of the system configuration.

POINT

(1) Peripheral connection module
For details of the peripheral connection module, refer to the following manual.

☞ Peripheral Connection Module Type AJ65BT-G4-S3 User's Manual (detail volume)

(2) CC-Link module
For details of the CC-Link module, refer to the following manual.

☞ CC-Link System Master/Local Module User's Manual QJ61BT11N

☞ MELSEC-L CC-Link System Master/Local Module User's Manual

(3) CC-Link function built-in CPU
For details on the CC-Link function built-in CPU, refer to the following manual.

☞ MELSEC-L CC-Link System Master/Local Module User's Manual

■ System configuration

☞ 24.5.3 Switch setting of CC-Link module (Q Series)
24.5.4 [Network parameter] of GX Developer

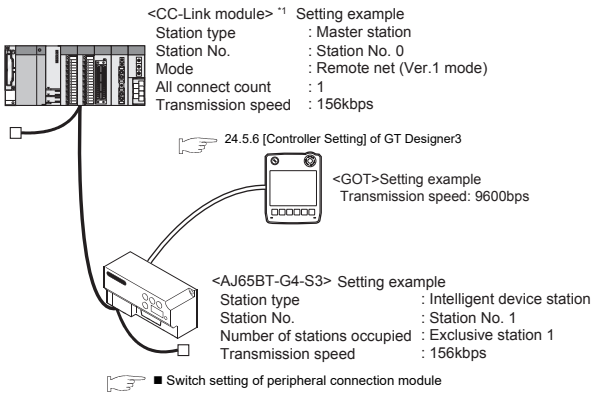

*1 The Start I/O No. of the CC-Link module is set to "0"

■ Switch setting of peripheral connection module

Set the station number setting switch, data link transmission speed setting switch, and operation setting DIP switch.

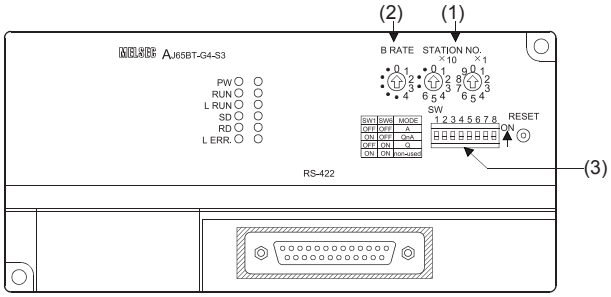

(1) Station number setting switch

Station number setting switch	Description	Set value	Setting necessity at GOT connection
STATION NO. ×10 ×1	AJ65BT-G4-S3 station number setting	1 to 64	○

○: Necessary △: As necessary ×: Not necessary

(2) Data link transmission speed setting switch

Data link transmission speed setting switch	Description	Set value	Setting necessity at GOT connection
B RATE	Data link transmission speed setting	0: 156kbps 1: 625kbps 2: 2.5Mbps 3: 5Mbps 4: 10Mbps	○

○: Necessary △: As necessary ×: Not necessary

(3) Operation setting DIP switch

Operation setting DIP switch	Setting switch	Description	Set value	Setting necessity at GOT connection
SW 1 2 3 4 5 6 7 8 ON	SW1, SW6	Operation mode	SW1 = OFF SW6 = ON (fixed) (Q mode)	○
	SW2	Peripheral transmission speed*1	OFF (fixed)	×
	SW3			
	SW4	Unused	OFF (fixed)	×
	SW5			
	SW7			
	SW8	Test mode	OFF (fixed) (Online mode)	○

○: Necessary △: As necessary ×: Not necessary

*1 The peripheral connection module operates at the transmission speed set on the GOT.

24.5.6 [Controller Setting] of GT Designer3

POINT

Operation mode of peripheral connection module

Be sure to set the "Q mode" as an operation mode of the peripheral connection module.

24.5.2 Connecting AJ65BT-R2N

This section describes the settings of the GOT and peripheral connection module in the following case of the system configuration.

POINT

(1) Peripheral connection module
For details of the peripheral connection module, refer to the following manual.

Peripheral Connection Module Type AJ65BT-R2N User's Manual

(2) CC-Link module
For details of the CC-Link module, refer to the following manual.

CC-Link System Master/Local Module User's Manual QJ61BT11N

MELSEC-L CC-Link System Master/Local Module User's Manual

(3) CC-Link function built-in CPU
For details on the CC-Link function built-in CPU, refer to the following manual.

MELSEC-L CC-Link System Master/Local Module User's Manual

■ System configuration

24.5.3 Switch setting of CC-Link module (Q Series)
24.5.4 [Network parameter] of GX Developer

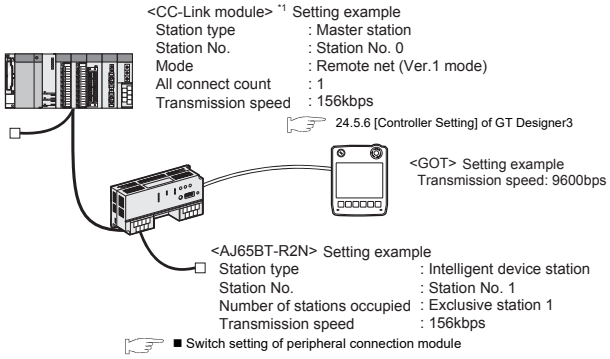

*1 The Start I/O No. of the CC-Link module is set to "0"

■ Switch setting of peripheral connection module

Set the station number setting switch, data link transmission speed setting switch, and operation setting DIP switch.

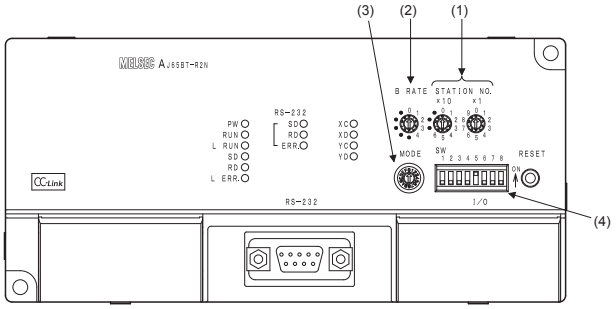

(1) Station number setting switch

Station number setting switch	Description	Set value	Setting necessity at GOT connection
STATION NO. x10 x1	AJ65BT-R2N station number setting	1 to 64	○

○: Necessary △: As necessary ×: Not necessary

(2) Data link transmission speed setting switch

Data link transmission speed setting switch	Description	Set value	Setting necessity at GOT connection
B RATE	Data link transmission speed setting	0: 156kbps 1: 625kbps 2: 2.5Mbps 3: 5Mbps 4: 10Mbps	○

○: Necessary △: As necessary ×: Not necessary

(3) Mode setting switch

Mode setting switch	Description	Set value	Setting necessity at GOT connection
MODE	Mode setting switch	5 (fixed) (MELSOFT/ connection mode)	○

○: Necessary △: As necessary ×: Not necessary

(4) RS-232 transmission setting switch

RS-232 transmission setting switch	Setting switch	Description	Set value	Setting necessity at GOT connection
SW 1 2 3 4 5 6 7 8 ON	SW1	Peripheral transmission speed*1	OFF (fixed)	○
	SW2			
	SW3			
	SW4			
	SW5	Date bit length	OFF (fixed)	○
	SW6	Parity bit setting	OFF (fixed)	○
	SW7			
	SW8	Stop bit length	OFF (fixed)	○

○: Necessary △: As necessary ×: Not necessary

*1 The peripheral connection module operates at the transmission speed set on the GOT.

24.5.6 [Controller Setting] of GT Designer3

POINT

Precautions when setting peripheral connection module

(1) Operation mode setting switch
Be sure to set the Operation mode setting switch to "5" (MELSOFT/connection mode).

(2) RS-232 transmission setting switch
Turn OFF SW1 through SW8 of the RS-232 transmission setting switch.
If any switch of SW1 through SW8 is ON, a setting error will occur (RUN LED turns off).

24.5.3 Switch setting of CC-Link module (Q Series)

Set the station number setting switch, transmission speed / mode setting switch.

QJ61BT11,QJ61BT11N

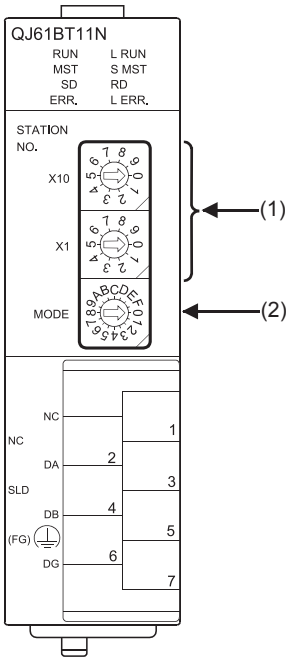

(1) Station number setting switch

Station number setting switch	Description	Set value	Setting necessity at GOT connection
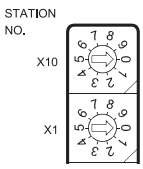	Station number setting (master station)	0 (fixed)	○

○: Necessary △: As necessary ×: Not necessary

(2) Transmission rate/mode setting switch

Transmission rate/mode setting switch	Description	Set value	Setting necessity at GOT connection
	Transmission rate/ mode setting	0: 156kbps 1: 625kbps 2: 2.5Mbps 3: 5Mbps 4: 10Mbps	○

○: Necessary △: As necessary ×: Not necessary

POINT

When the switch setting has been changed

Turn the PLC CPU OFF then ON again, or reset the PLC CPU.

24.5.4 [Network parameter] of GX Developer

(1) Network parameter

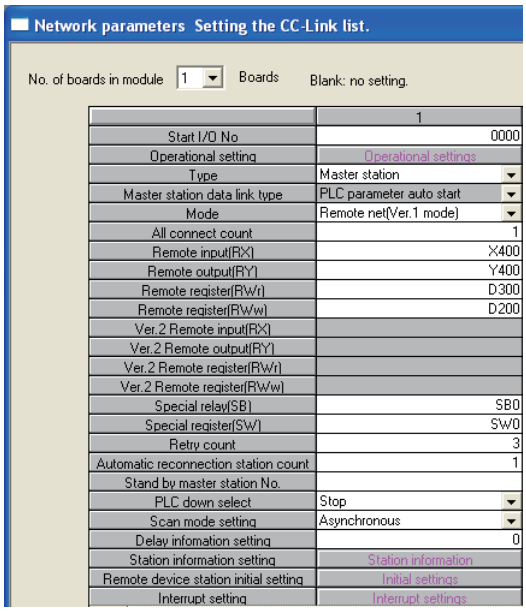

Item	Set value	Setting necessity at GOT connection
No. of boards in module	1	○
Start I/O No.	0000H	○
Operational setting	(Use default value)	△
Type	Master station (fixed)	○
Mode	Remote net (Ver.1 mode)	○
All connect count	1	○
Remote input (RX)	X400	△
Remote output (RY)	Y400	△
Remote register (RWr)	D300	△
Remote register (RWw)	D200	△
Special relay (SB)	SB0	△
Special register (SW)	SW0	△
Retry count	(Use default value)	△
Automatic reconnection station count		△
Stand by master station No.		×
PLC down select		△
Scan mode setting		△
Delay information setting		△
Station information setting	Refer to (2).	○
Remote device station initial setting	(Use default value)	×
Interrupt setting		×

○: Necessary △: As necessary ×: Not necessary

(2) Station information setting

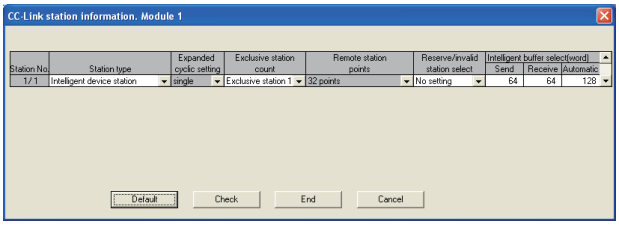

Item[*1]	Set value	Setting necessity at GOT connection
Station type[*2]	Intelligent device station (fixed)	○
Exclusive station count	Exclusive station 1 (fixed)	○
Reserve/invalid station select	No setting	○
Intelligent buffer select (word)	(Use default value)	×

○: Necessary △: As necessary ×: Not necessary

*1 When the [Mode] of the CC-Link module is set at [Remote net - (Ver. 2 mode)], [Remote station points] can be set. [Remote station points] is a setting for the remote I/O station. The default value (32 points) must be used on the GOT.

*2 When the [Mode] of the CC-Link module is set at [Remote net - (Ver. 2 mode)] or [Remote net - Additional mode], set to [Ver. 1 Intelligent device station].

POINT

When changing the network parameter

After writing the network parameter to the PLC CPU, operate the PLC CPU either turning OFF and then ON or resetting.

(3) Completion confirmation

After initial communications of CC-Link are completed, the L RUN LED of AJ65BT-G4-S3 turns on.
The GOT starts to monitor after the L-RUN LED of AJ65BT-G4-S3 turns on.
It does not monitor while the L RUN LED turns off.

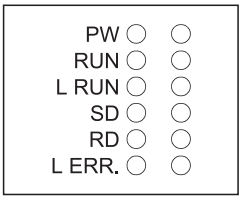

24.5.5 Parameter setting (when connecting to C controller module (Q Series))

Use SW3PVC-CCPU-J Ver.3.04E or later for the C Controller module setting utility.

(1) Target module

Item	Set value	Setting necessity at GOT connection
Target module[*1]	192.168.3.3	○
Write authority	Mark the checkbox	○
User name[*2]	target	○
Password[*2]	password	○
Detailed settings	-	△

○: Necessary △: As necessary ×: Not necessary

*1 If the IP address of the C controller module (Q Series) has been changed, input the changed IP address or host name.

*2 If the account of the C controller module (Q Series) has been changed, input the changed user name and password.

(2) CC-Link Utility's [Parameter Setting]

(a) Network parameter

Item		Set value	Setting necessity at GOT connection
No. of boards in module		1	○
Target unit		1	○
Start I/O No.		0000H	○
Channel No.		(Use default value)	○
Operation setting	Type	Master station (fixed)	○
	Mode*1	Remote net (Ver.1 mode)	○
	Expanded cyclic setting	Single (fixed)	△
	Number of stations occupied	Exclusive station 1 (fixed)	△
	Error event: input data status	Clear	△
	CPU stop: data link status	Refresh	△
	Other settings	(Use default value)	△
Station information setting	All connect count	1	○
	Station type	Ver.1 intelligent device station (fixed)	○
	Expanded cyclic setting	Single	△
	Number of stations occupied*2	Exclusive station 1	×
	Remote station points	32 points	○
	Reserve/invalid station select	No setting	○
	Intelligent buffer select (word)	(Use default value)	×

○: Necessary △: As necessary ×: Not necessary

*1 When the [Mode] of the CC-Link module is set at [Remote net - (Ver. 1 mode)], [Remote station points] cannot be set.

*2 Set the same setting as that of the GOT.

POINT

When changing the network parameter

After writing the network parameter to the C controller module (Q Series), either turn the C controller module (Q Series) OFF and then ON or reset it.

24.5.6 [Controller Setting] of GT Designer3

Item	Set value
Transmission Speed	9600bps 19200bps 38400bps 57600bps 115200bps
Retry	0 to 5times
Timeout Time	3 to 30sec
Delay Time	0 to 300 (ms)

POINT

[Controller Setting] of GT Designer3

For the setting method of [Controller Setting] of GT Designer3, refer to the following.

24.4.1 Setting communication interface (Communication settings)

24.6 Precautions

■ Connection in the multiple CPU system

When the GOT is connected to multiple CPU system, the following time is taken until when the PLC runs.

QCPU (Q mode), motion controller CPU (Q series): 10 seconds or more

MELDAS C70: 18 seconds or more

When the GOT starts before the PLC runs, a system alarm occurs. Adjust the opening screen time in the GOT setup so that no system alarm occurs.

☞ GT Designer3 Version1 Screen Design Manual

■ Connection to LCPU

LCPU may diagnose (check file system, recovering process, etc.) the SD memory card when turning on the power or when resetting.
Therefore, it takes time until the SD memory card becomes available. When the GOT starts before the SD card becomes available, a system alarm occurs. Adjust the opening screen time in the GOT setup so that no system alarm occurs.

☞ GT Designer3 Version1 Screen Design Manual

■ Connection to Q17nDCPU, Q170MCPU, CNC C70, and CRnQ-700

The Q17nDCPU, Q170MCPU, CNC C70 and CRnQ-700 are applicable to the CC-Link network system Ver.2 only.

For connecting to the CC-Link (Via G4) network system, set the CC-Link (G4) network system to the CC-Link Ver.2 mode.

■ Connection to Q170MCPU

Set [CPU No.] to "2" in the device setting to monitor the device of the Motion CPU area (CPU No.2).

When the CPU No. is set to "0" or "1", the device on the PLC CPU area (CPU No.1) is monitored.

When the CPU No. is set to the number other than "0" to "2", a communication error occurs and the monitoring cannot be executed.

For setting the CPU No., refer to the following manual.

☞ GT Designer3 Version1 Screen Design Manual

Example) Setting dialog box of the bit device

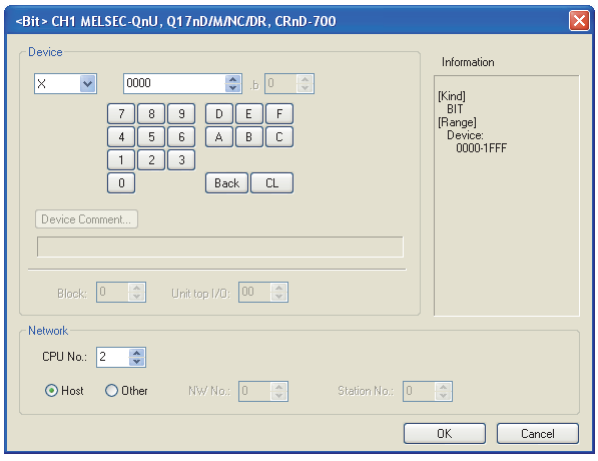

MITSUBISHI FA DEVICE CONNECTIONS

25. INVERTER CONNECTION . . . . . 25 - 1
26. SERVO AMPLIFIER CONNECTION . . . . . 26 - 1
27. ROBOT CONTROLLER CONNECTION . . . . . 27 - 1
28. CNC CONNECTION . . . . . 28 - 1

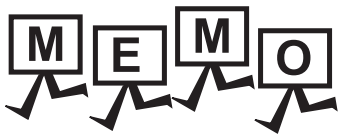
MEMO

25. INVERTER CONNECTION

25.1 Connectable Model List

The following table shows the connectable models.

Series name	Model	Clock	Communication type	GT14 Handy	Refer to
FREQROL	FREQROL-A500/A500L	×	RS-422	○	25.2.1
	FREQROL-F500/F500L				
	FREQROL-V500/V500L				
	FREQROL-E500	×	RS-422	○	25.2.2
	FREQROL-S500/S500E				
	FREQROL-F500J				
	FREQROL-D700				
	FREQROL-F700PJ				
	FREQROL-E700	×	RS-422	○	25.2.3
	FREQROL-A700	×	RS-422	○	25.2.4
	FREQROL-F700				
	FREQROL-F700P				
	FREQROL-A800/F800	×	RS-422	○	25.2.5
Sensorless Servo	FREQROL-E700EX	×	RS-422	○	25.2.3
MELPIM	MD-CX522-□□K(-A0)	×	RS-422	○	25.2.6

25.2 System Configuration

25.2.1 Connecting to FREQROL-A500/A500L/F500/F500L/V500/V500L

■ When connecting to one inverter

Communication driver

FREQROL 500/700/800, SENSORLESS SERVO

(1) When using the connector conversion box

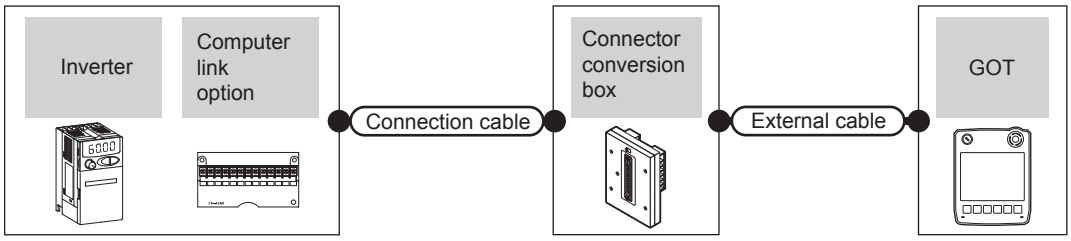

Inverter			Connection cable	Connector conversion box	External cable	GOT model	Total distance	Number of connectable equipment
Model	Computer link option	Communication type	Connection diagram number					
FREQROL-A500/A500L F500/F500L V500/V500L *1	-	RS-422	User preparing RS422 connection diagram 1)	GT11H-CNB-37S	GT11H-C30-37P (3m) GT11H-C60-37P (6m) GT11H-C100-37P (10m)	GT14 Handy	13m	1 GOT for 1 inverter
FREQROL-A500/A500L F500/F500L V500/V500L	FR-A5NR	RS-422	User preparing RS422 connection diagram 3)					

*1 Connect to the PU port of the inverter.

(2) When using the external cable (GT11H-C□□□-37P)

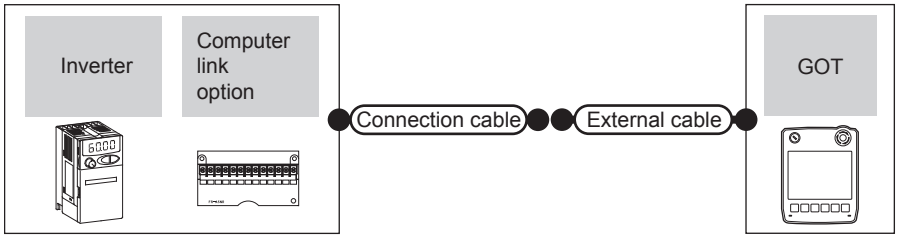

Inverter			Connection cable	External cable	GOT model	Total distance	Number of connectable equipment
Model	Computer link option	Communication type	Connection diagram number				
FREQROL-A500/A500L F500/F500L V500/V500L *1	-	RS-422	User preparing RS422 connection diagram 2)	GT11H-C30-37P (3m) GT11H-C60-37P (6m) GT11H-C100-37P (10m)	GT14 Handy	13m	1 GOT for 1 inverter
FREQROL-A500/A500L F500/F500L V500/V500L	FR-A5NR	RS-422	User preparing RS422 connection diagram 4)				

*1 Connect to the PU port of the inverter.

(3) When using the external cable (GT11H-C□□□)

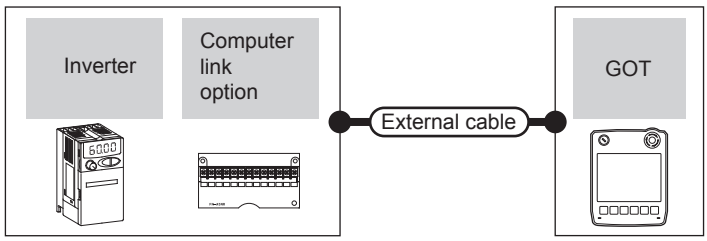

Inverter			External cable	GOT model	Total distance	Number of connectable equipment
Model	Computer link option	Communication type				
FREQROL-A500/A500L F500/F500L V500/V500L	FR-A5NR	RS-422	GT11H-C30 (3m) GT11H-C60 (6m) GT11H-C100 (10m) (User preparing) RS422 connection diagram 5)	GT14 Handy	13m	1 GOT for 1 inverter

■ When connecting to multiple inverters (Max. 10) (Using the distributor)

Communication driver

FREQROL 500/700/800, SENSORLESS SERVO

(1) When using the connector conversion box

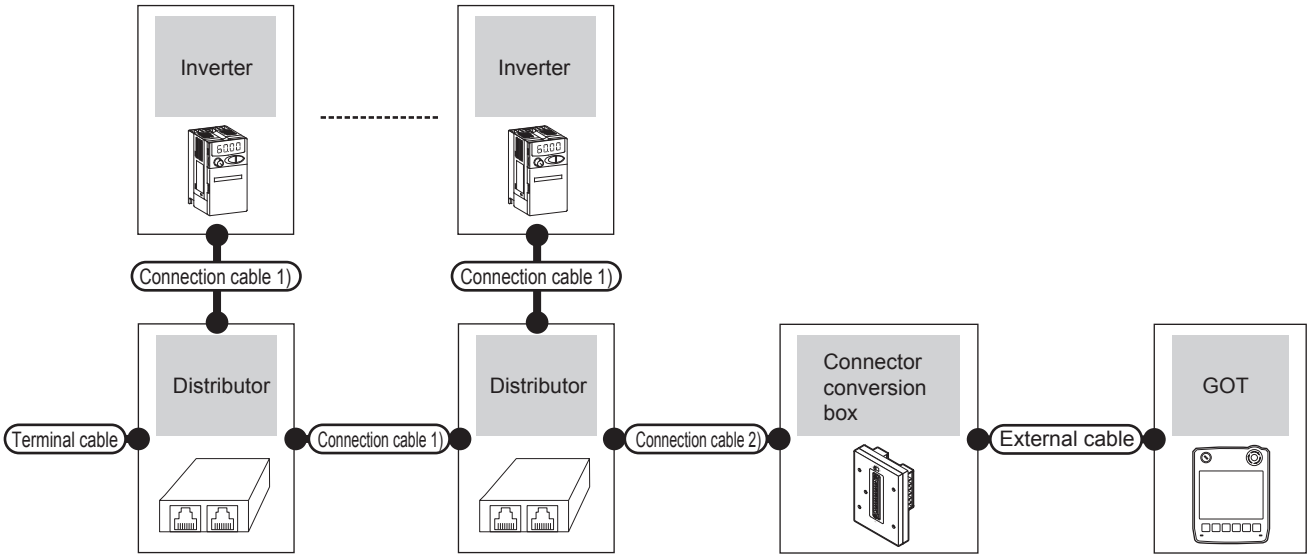

Inverter		Terminal cable	Connection cable 1)	Distributor*3	Connection cable 2)	Connector conversion box	External cable	GOT model	Total distance *2	Number of connectable equipment
Model	Communication type		Connection diagram number	Model	Connection diagram number					
FREQROL-A500/A500L F500/F500L V500/V500L *1	RS-422	RS422 connection diagram 13) (User preparing)	RS422 connection diagram 6) (User preparing)	BMJ-8 (Recommended)	RS422 connection diagram 1) (User preparing)	GT11H-CNB-37S	GT11H-C30-37P (3m) GT11H-C60-37P (6m) GT11H-C100-37P (10m)	GT14 Handy	13m	10 inverters for 1 GOT

*1 Connect to the PU port of the inverter.

*2 The distance from the GOT to the inverter (Connection cable 1) + Connection cable 2) + External cable)

*3 The distributor is a product manufactured by HACHIKO ELECTRIC CO., LTD. For details, contact HACHIKO ELECTRIC CO., LTD.

(2) When using the external cable (GT11H-C□□□-37P)

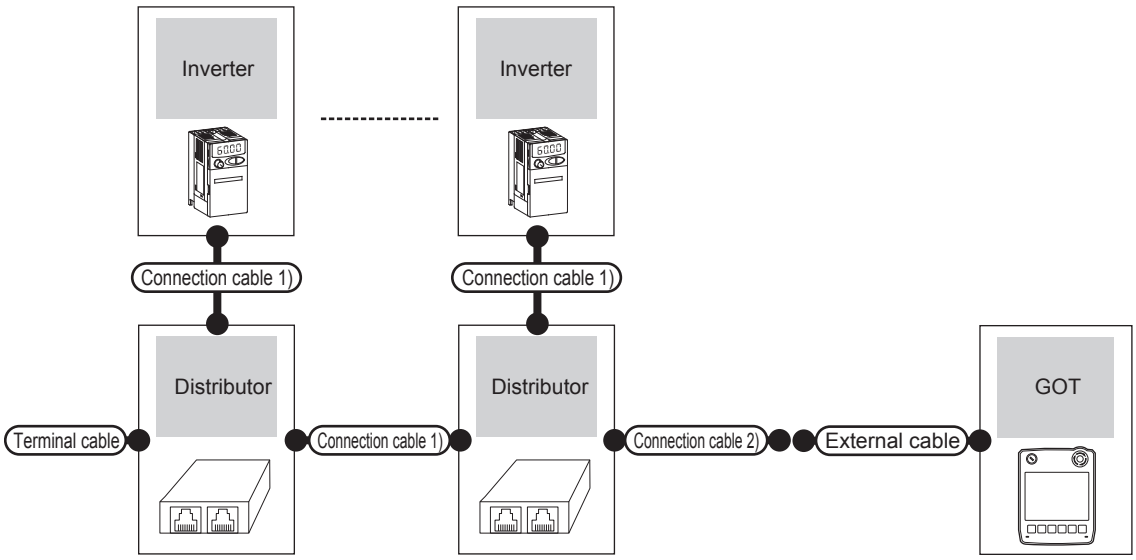

Inverter		Terminal cable	Connection cable 1)	Distributor*3	Connection cable 2)	External cable	GOT model	Total distance *2	Number of connectable equipment
Model	Communication type		Connection diagram number	Model	Connection diagram number				
FREQROL-A500/A500L F500/F500L V500/V500L *1	RS-422	RS422 connection diagram 13) User preparing	RS422 connection diagram 6) User preparing	BMJ-8 (Recommended)	RS422 connection diagram 2) User preparing	GT11H-C30-37P (3m) GT11H-C60-37P (6m) GT11H-C100-37P (10m)	GT14 Handy	13m	10 inverters for 1 GOT

*1 Connect to the PU port of the inverter.

*2 The distance from the GOT to the inverter (Connection cable 1) + Connection cable 2) + External cable)

*3 The distributor is a product manufactured by HACHIKO ELECTRIC CO., LTD. For details, contact HACHIKO ELECTRIC CO., LTD.

■ When connecting to multiple inverters (Max. 10) (Using the computer link option)

Communication driver

FREQROL 500/700/800, SENSORLESS SERVO

(1) When using the connector conversion box

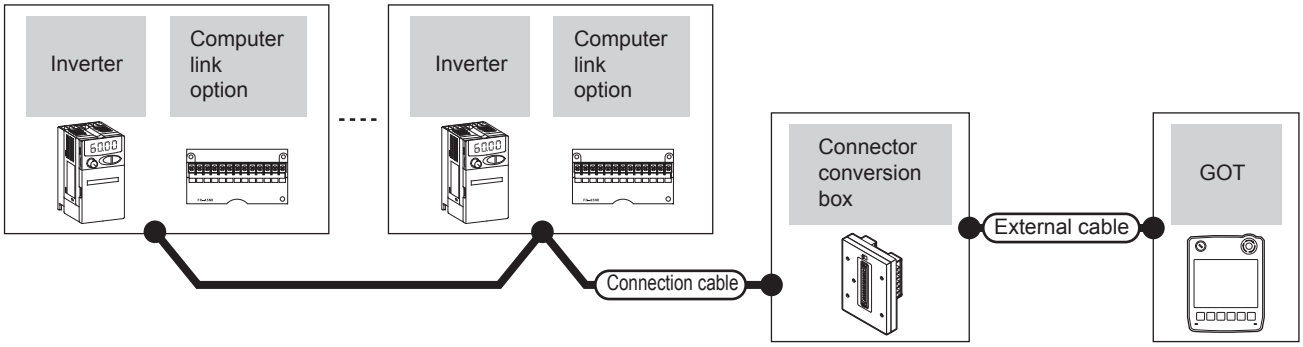

Inverter			Connection cable	Connector conversion box	External cable	GOT model	Total distance	Number of connectable equipment
Model	Computer link option	Communication type	Connection diagram number					
FREQROL-A500/A500L F500/F500L V500/V500L	FR-A5NR	RS-422	User preparing RS422 connection diagram 14)	GT11H-CNB-37S	GT11H-C30-37P (3m) GT11H-C60-37P (6m) GT11H-C100-37P (10m)	GT14 Handy	13m	10 inverters for 1 GOT

(2) When using the external cable (GT11H-C□□□-37P)

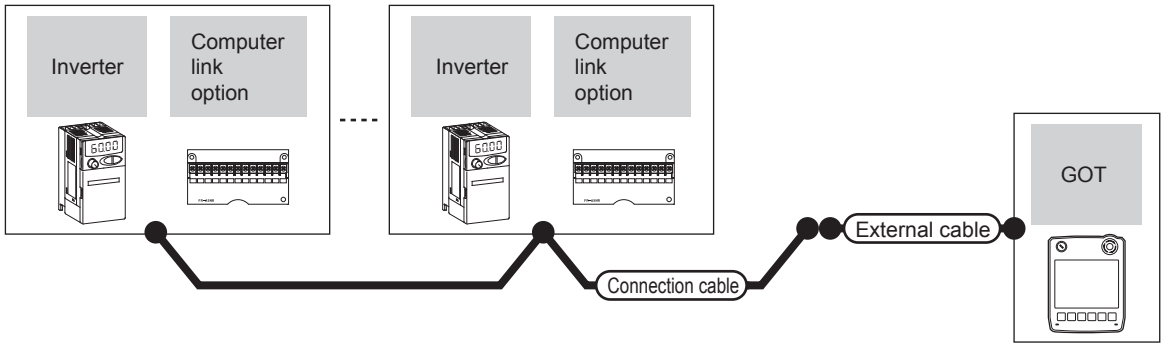

Inverter			Connection cable	External cable	GOT model	Total distance	Number of connectable equipment
Model	Computer link option	Communication type	Connection diagram number				
FREQROL-A500/A500L F500/F500L V500/V500L	FR-A5NR	RS-422	User preparing RS422 connection diagram 15)	GT11H-C30-37P (3m) GT11H-C60-37P (6m) GT11H-C100-37P (10m)	GT14 Handy	13m	10 inverters for 1 GOT

(3) When using the external cable (GT11H-C□□□)

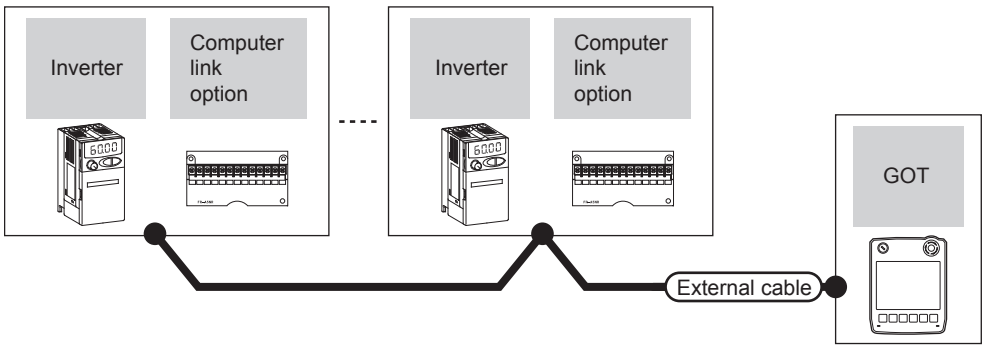

Inverter			External cable	GOT model	Total distance	Number of connectable equipment
Model	Computer link option	Communication type				
FREQROL-A500/A500L F500/F500L V500/V500L	FR-A5NR	RS-422	GT11H-C30 (3m) GT11H-C60 (6m) GT11H-C100 (10m) (User preparing) RS422 connection diagram 16)	GT14 Handy	13m	10 inverters for 1 GOT

25.2.2 Connecting to FREQROL-E500/S500/S500E/F500J/D700/F700PJ

■ When connecting to one inverter

Communication driver

FREQROL 500/700/800, SENSORLESS SERVO

(1) When using the connector conversion box

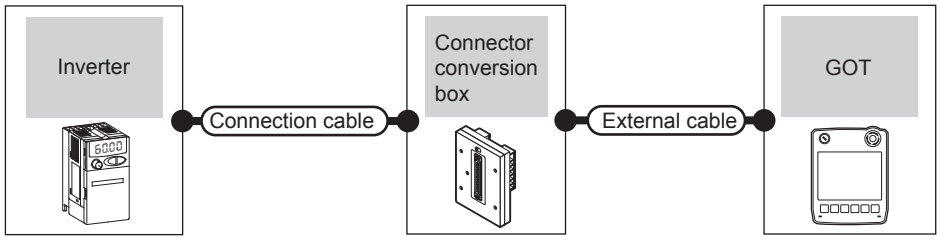

Inverter		Connection cable	Connector conversion box	External cable	GOT model	Total distance	Number of connectable equipment
Model	Communication type	Connection diagram number					
FREQROL-E500/S500/S500E F500J/D700/F700PJ *1	RS-422	User preparing RS422 connection diagram 1)	GT11H-CNB-37S	GT11H-C30-37P (3m) GT11H-C60-37P (6m) GT11H-C100-37P (10m)	GT14 Handy	13m	1 GOT for 1 inverter

*1 Connect to the PU port of the inverter.

(2) When using the external cable (GT11H-C□□□-37P)

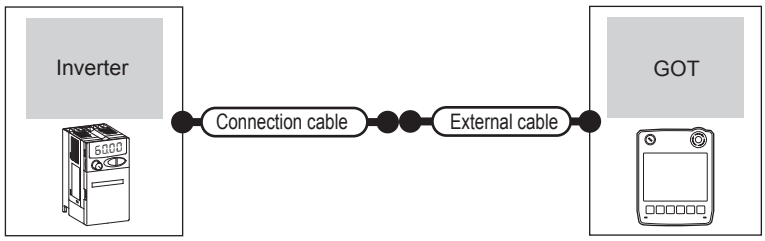

Inverter		Connection cable	External cable	GOT model	Total distance	Number of connectable equipment
Model	Communication type	Connection diagram number				
FREQROL-E500/S500/S500E F500J/D700/F700PJ *1	RS-422	User preparing RS422 connection diagram 2)	GT11H-C30-37P (3m) GT11H-C60-37P (6m) GT11H-C100-37P (10m)	GT14 Handy	13m	1 GOT for 1 inverter

*1 Connect to the PU port of the inverter.

■ When connecting to multiple inverters (Max. 10) (Using the distributor)

Communication driver

FREQROL 500/700/800, SENSORLESS SERVO

(1) When using the connector conversion box

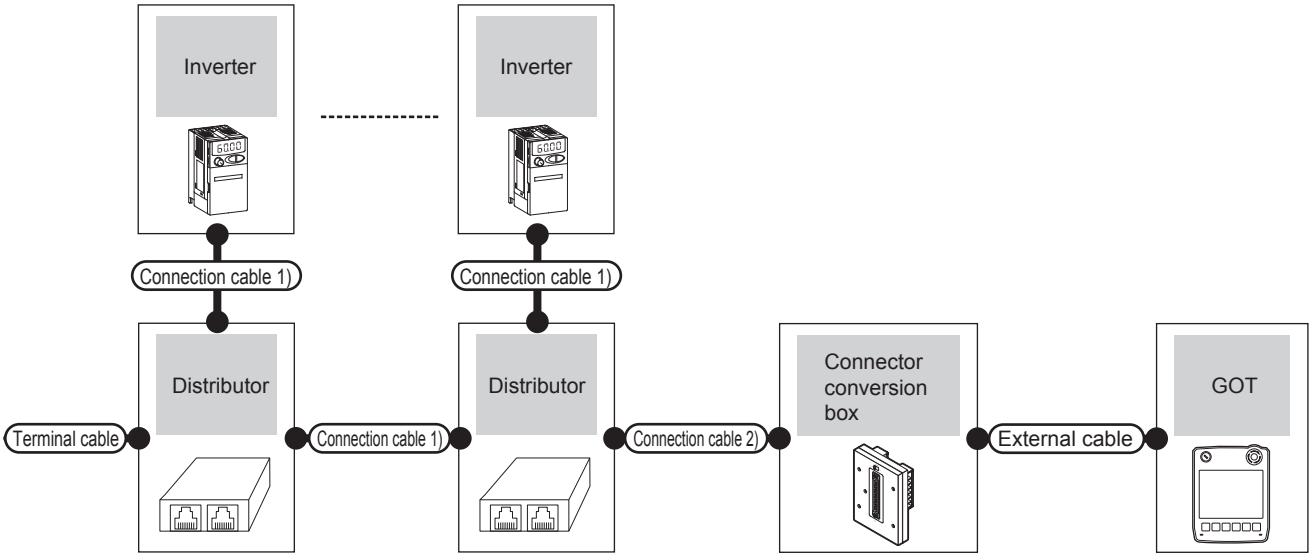

Inverter		Terminal cable	Connection cable 1)	Distributor*2	Connection cable 2)	Connector conversion box	External cable	GOT model	Total distance *3	Number of connectable equipment
Model	Communication type		Connection diagram number	Model	Connection diagram number					
FREQROL-E500/S500 S500E/F500J D700/F700PJ *1	RS-422	RS422 connection diagram 13) User preparing	RS422 connection diagram 6) User preparing	BMJ-8 (Recommended)	RS422 connection diagram 1) User preparing	GT11H-CNB-37S	GT11H-C30-37P (3m) GT11H-C60-37P (6m) GT11H-C100-37P (10m)	GT14 Handy	13m	10 inverters for 1 GOT

*1 Connect to the PU port of the inverter.

*2 The distributor is a product manufactured by HACHIKO ELECTRIC CO., LTD. For details, contact HACHIKO ELECTRIC CO., LTD.

*3 The distance from the GOT to the inverter (Connection cable 1) + Connection cable 2) + External cable)

(2) When using the external cable (GT11H-C□□□-37P)

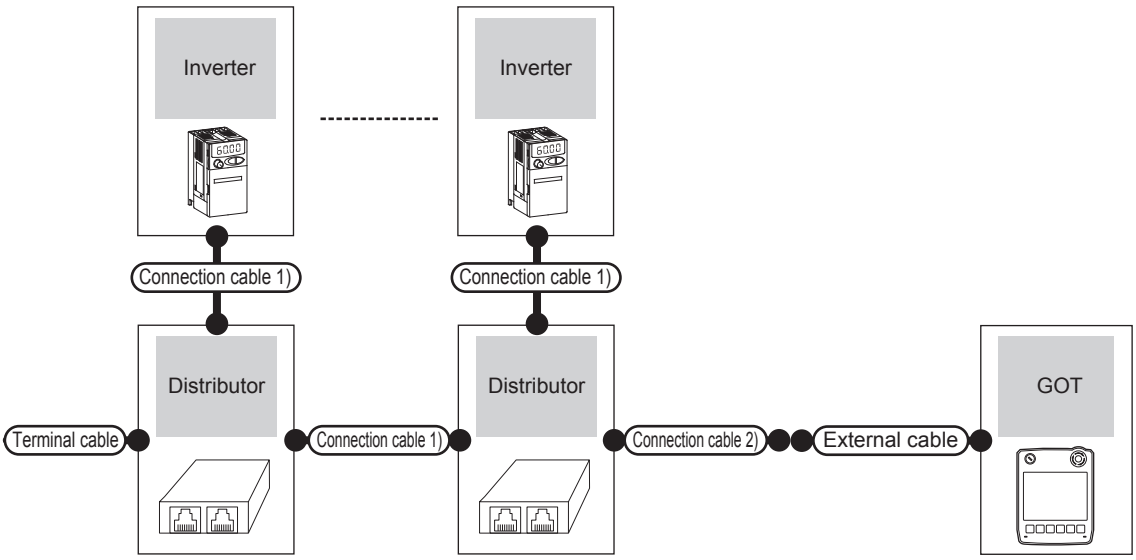

Inverter		Terminal cable	Connection cable 1)	Distributor*2	Connection cable 2)	External cable	GOT model	Total distance *3	Number of connectable equipment
Model	Communication type		Connection diagram number	Model	Connection diagram number				
FREQROL-E500/S500 S500E/F500J D700/F700PJ *1	RS-422	RS422 connection diagram 13) User preparing	RS422 connection diagram 6) User preparing	BMJ-8 (Recommended)	RS422 connection diagram 2) User preparing	GT11H-C30-37P (3m) GT11H-C60-37P (6m) GT11H-C100-37P (10m)	GT14 Handy	13m	10 inverters for 1 GOT

*1 Connect to the PU port of the inverter.

*2 The distributor is a product manufactured by HACHIKO ELECTRIC CO., LTD. For details, contact HACHIKO ELECTRIC CO., LTD.

*3 The distance from the GOT to the inverter (Connection cable 1) + Connection cable 2) + External cable)

25.2.3 Connecting to FREQROL E700/sensorless servo (FREQROL-E700EX)

■ When connecting to one inverter

Communication driver

FREQROL 500/700/800, SENSORLESS SERVO

(1) When using the connector conversion box

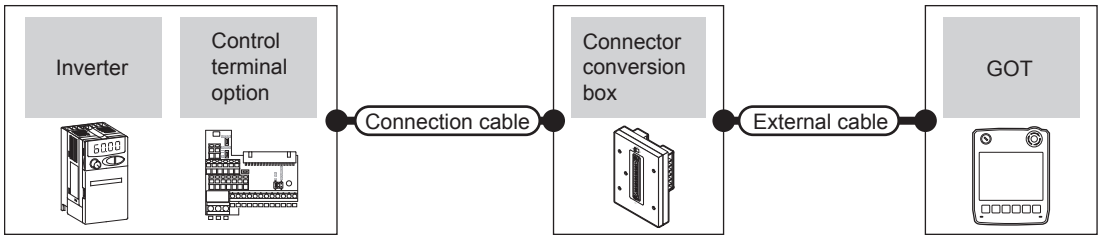

Inverter			Connection cable	Connector conversion box	External cable	GOT model	Total distance	Number of connectable equipment
Model	Control terminal option	Communication type	Connection diagram number					
FREQROL-E700/ sensorless servo (FREQROL-E700EX)*1	-	RS-422	RS422 connection diagram 1) User preparing	GT11H-CNB-37S	GT11H-C30-37P (3m) GT11H-C60-37P (6m) GT11H-C100-37P (10m)	GT14 Handy	13m	1 GOT for 1 inverter
FREQROL-E700/ sensorless servo (FREQROL-E700EX)*2	FR-E7TR*2	RS-422	RS422 connection diagram 10) User preparing	GT11H-CNB-37S	GT11H-C30-37P (3m) GT11H-C60-37P (6m) GT11H-C100-37P (10m)			

*1 Connect to the PU port of the inverter.

*2 The control terminal option and the PU port cannot be used at the same time.

(2) When using the external cable (GT11H-C□□□-37P)

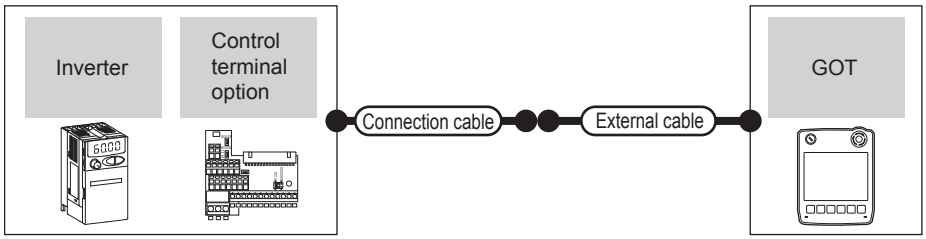

Inverter			Connection cable	External cable	GOT model	Total distance	Number of connectable equipment
Model	Control terminal option	Communication type	Connection diagram number				
FREQROL-E700/ sensorless servo (FREQROL-E700EX)*1	-	RS-422	RS422 connection diagram 2) User preparing	GT11H-C30-37P (3m) GT11H-C60-37P (6m) GT11H-C100-37P (10m)	GT14 Handy	13m	1 GOT for 1 inverter
FREQROL-E700/ sensorless servo (FREQROL-E700EX)*2	FR-E7TR*2	RS-422	RS422 connection diagram 11) User preparing				

*1 Connect to the PU port of the inverter.

*2 The control terminal option and the PU port cannot be used at the same time.

(3) When using the external cable (GT11H-C□□□)

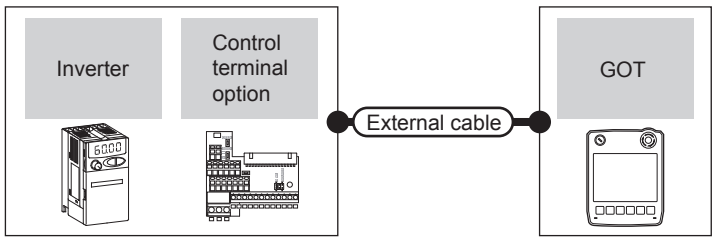

Inverter			External cable	GOT model	Total distance	Number of connectable equipment
Model	Control terminal option	Communication type				
FREQROLE700/ sensorless servo (FREQROL-E700EX)*1	FR-E7TR*1	RS-422	GT11H-C30 (3m) GT11H-C60 (6m) GT11H-C100 (10m) User preparing RS422 connection diagram 12)	GT14 Handy	13m	1 GOT for 1 inverter

*1 The control terminal option and the PU port cannot be used at the same time.

■ When connecting to multiple inverters (Max. 10) (Using the distributor)

Communication driver

FREQROL 500/700/800, SENSORLESS SERVO

(1) When using the connector conversion box

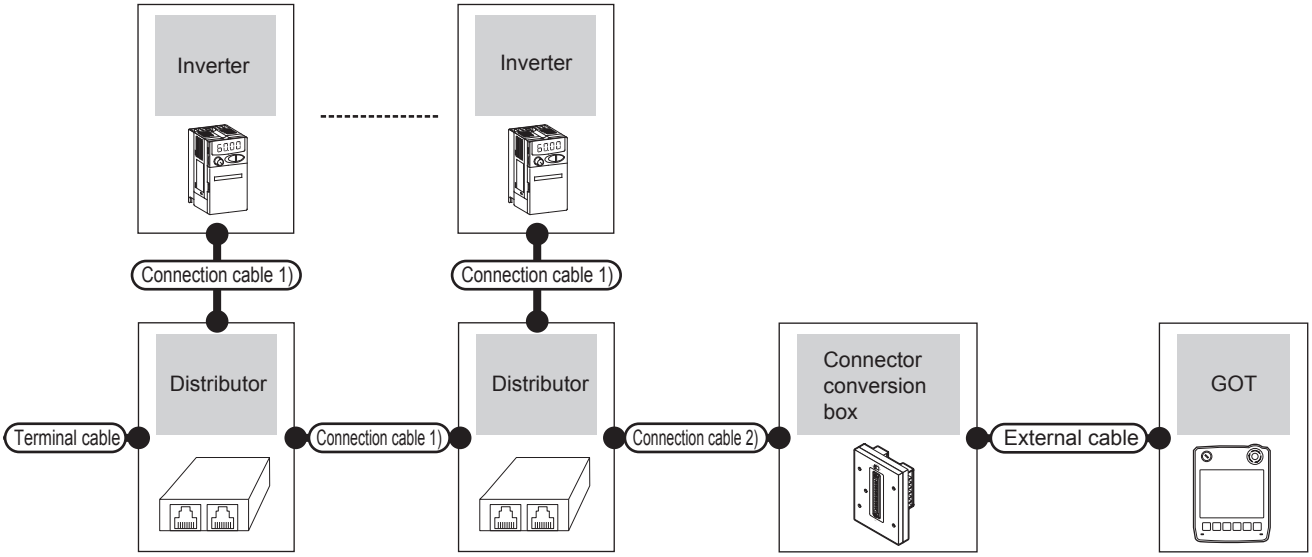

Inverter		Terminal cable	Connection cable 1)	Distributor*2	Connection cable 2)	Connector conversion box	External cable	GOT model	Total distance *3	Number of connectable equipment
Model	Communication type		Connection diagram number	Model	Connection diagram number					
FREQROL-E700/ sensorless servo (FREQROL-E700EX)*1	RS-422	RS422 connection diagram 13) User preparing	RS422 connection diagram 6) User preparing	BMJ-8 (Recommended)	RS422 connection diagram 1) User preparing	GT11H-CNB-37S	GT11H-C30-37P (3m) GT11H-C60-37P (6m) GT11H-C100-37P (10m)	GT14 Handy	13m	10 inverters for 1 GOT

*1 Connect to the PU port of the inverter.

*2 The distributor is a product manufactured by HACHIKO ELECTRIC CO., LTD. For details, contact HACHIKO ELECTRIC CO., LTD.

*3 The distance from the GOT to the inverter (Connection cable 1) + Connection cable 2) + External cable)

(2) When using the external cable (GT11H-C□□□-37P)

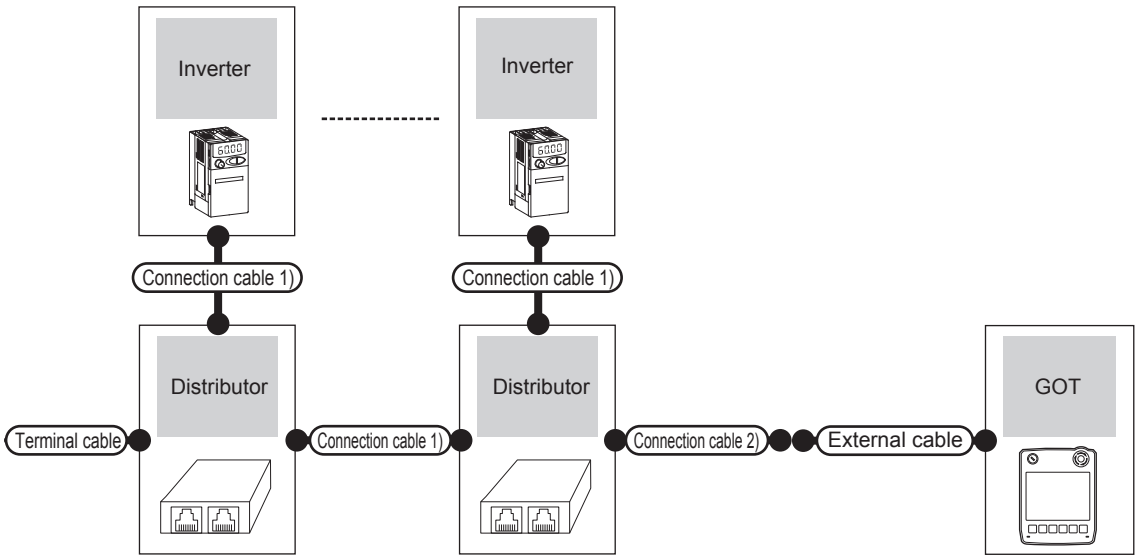

Inverter		Terminal cable	Connection cable 1)	Distributor*2	Connection cable 2)	External cable	GOT model	Total distance *3	Number of connectable equipment
Model	Communication type		Connection diagram number	Model	Connection diagram number				
FREQROL-E700/ sensorless servo (FREQROL-E700EX)*1	RS-422	RS422 connection diagram 13) User preparing	RS422 connection diagram 6) User preparing	BMJ-8 (Recommended)	RS422 connection diagram 2) User preparing	GT11H-C30-37P (3m) GT11H-C60-37P (6m) GT11H-C100-37P (10m)	GT14 Handy	13m	10 inverters for 1 GOT

*1 Connect to the PU port of the inverter.

*2 The distributor is a product manufactured by HACHIKO ELECTRIC CO., LTD. For details, contact HACHIKO ELECTRIC CO., LTD.

*3 The distance from the GOT to the inverter (Connection cable 1) + Connection cable 2) + External cable)

■ When connecting to multiple inverters (Max. 10) (Using the control terminal option)

Communication driver

FREQROL 500/700/800, SENSORLESS SERVO

(1) When using the connector conversion box

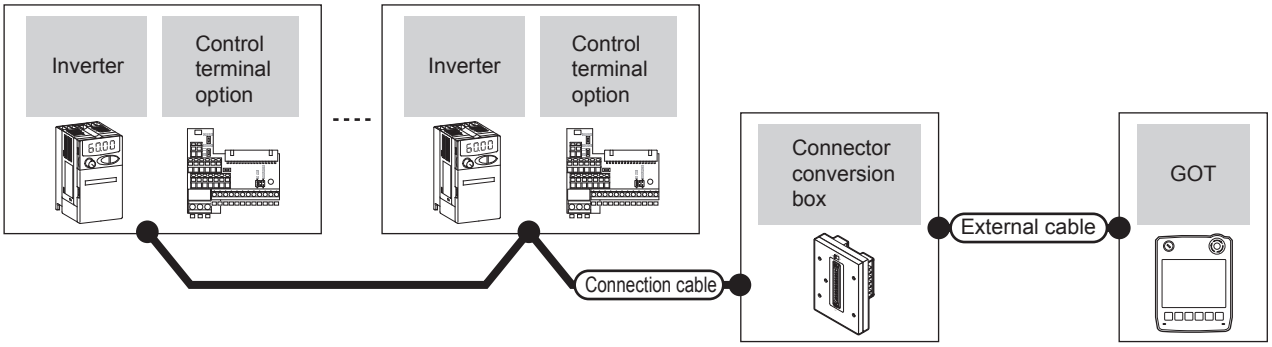

Inverter			Connection cable	Connector conversion box	External cable	GOT model	Total distance	Number of connectable equipment
Model	Control terminal option	Communication type	Connection diagram number					
FREQROL-E700/ sensorless servo (FREQROL-E700EX)*1	FR-E7TR*1	RS-422	User preparing RS422 connection diagram 20)	GT11H-CNB-37S	GT11H-C30-37P (3m) GT11H-C60-37P (6m) GT11H-C100-37P (10m)	GT14 Handy	13m	10 inverters for 1 GOT

*1 The control terminal option and the PU port cannot be used at the same time.

(2) When using the external cable (GT11H-C□□□-37P)

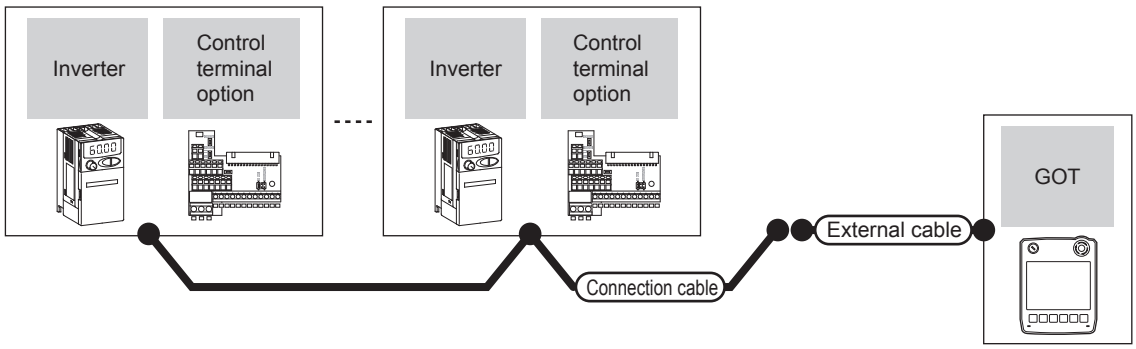

Inverter			Connection cable	External cable	GOT model	Total distance	Number of connectable equipment
Model	Control terminal option	Communication type	Connection diagram number				
FREQROL-E700/ sensorless servo (FREQROL-E700EX)*1	FR-E7TR*1	RS-422	User preparing RS422 connection diagram 21)	GT11H-C30-37P (3m) GT11H-C60-37P (6m) GT11H-C100-37P (10m)	GT14 Handy	13m	10 inverters for 1 GOT

*1 The control terminal option and the PU port cannot be used at the same time.

(3) When using the external cable (GT11H-C□□□)

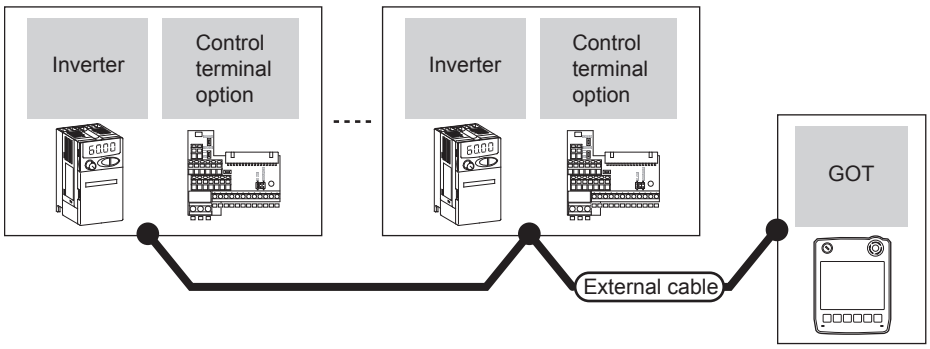

Inverter			External cable	GOT model	Total distance	Number of connectable equipment
Model	Control terminal option	Communication type				
FREQROL-E700/sensorless servo (FREQROL-E700EX)*1	FR-E7TR*1	RS-422	GT11H-C30 (3m) GT11H-C60 (6m) GT11H-C100 (10m) User preparing RS422 connection diagram 22)	GT14 Handy	13m	10 inverters for 1 GOT

*1 The control terminal option and the PU port cannot be used at the same time.

25.2.4 Connecting to FREQROL-A700/F700/F700P

■ When connecting to one inverter

Communication driver

FREQROL 500/700/800, SENSORLESS SERVO

(1) When using the connector conversion box

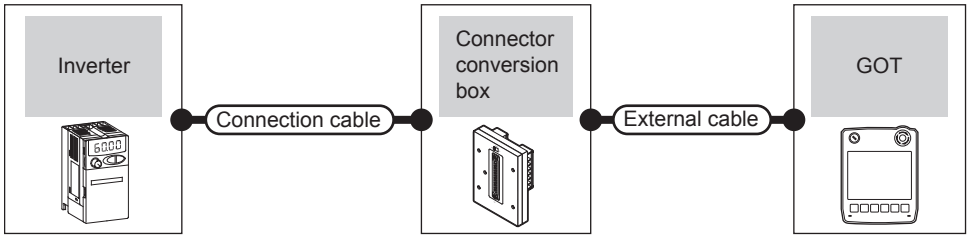

Inverter		Connection cable	Connector conversion box	External cable	GOT model	Total distance	Number of connectable equipment
Model	Communication type	Connection diagram number					
FREQROL-A700/F700/F700P (PU port)	RS-422	User preparing RS422 connection diagram 1)	GT11H-CNB-37S	GT11H-C30-37P (3m) GT11H-C60-37P (6m) GT11H-C100-37P (10m)	GT14 Handy	13m	1 GOT for 1 inverter
FREQROL-A700/F700/F700P (Built-in RS485 terminal block)	RS-422	User preparing RS422 connection diagram 7)					

(2) When using the external cable (GT11H-C□□□-37P)

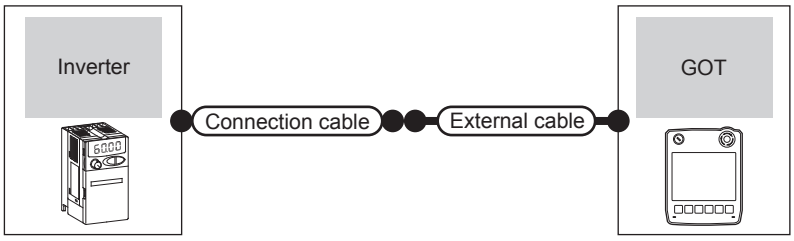

Inverter		Connection cable	External cable	GOT model	Total distance	Number of connectable equipment
Model	Communication type	Connection diagram number				
FREQROL-A700/F700/F700P (PU port)	RS-422	User preparing RS422 connection diagram 2)	GT11H-C30-37P (3m) GT11H-C60-37P (6m) GT11H-C100-37P (10m)	GT14 Handy	13m	1 GOT for 1 inverter
FREQROL-A700/F700/F700P (Built-in RS485 terminal block)	RS-422	User preparing RS422 connection diagram 8)				

(3) When using the external cable (GT11H-C□□□)

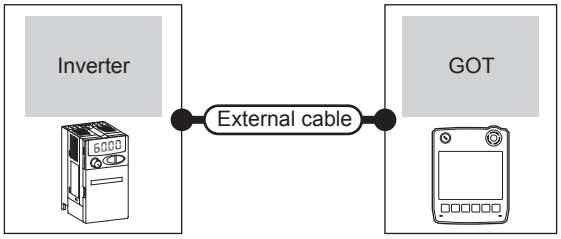

Inverter		External cable	GOT model	Total distance	Number of connectable equipment
Model	Communication type				
FREQROL-A700/F700/F700P (Built-in RS485 terminal block)	RS-422	GT11H-C30 (3m) GT11H-C60 (6m) GT11H-C100 (10m) User preparing RS422 connection diagram 9)	GT14 Handy	13m	1 GOT for 1 inverter

■ When connecting to multiple inverters (Max. 10) (Using the distributor)

Communication driver

FREQROL 500/700/800, SENSORLESS SERVO

(1) When using the connector conversion box

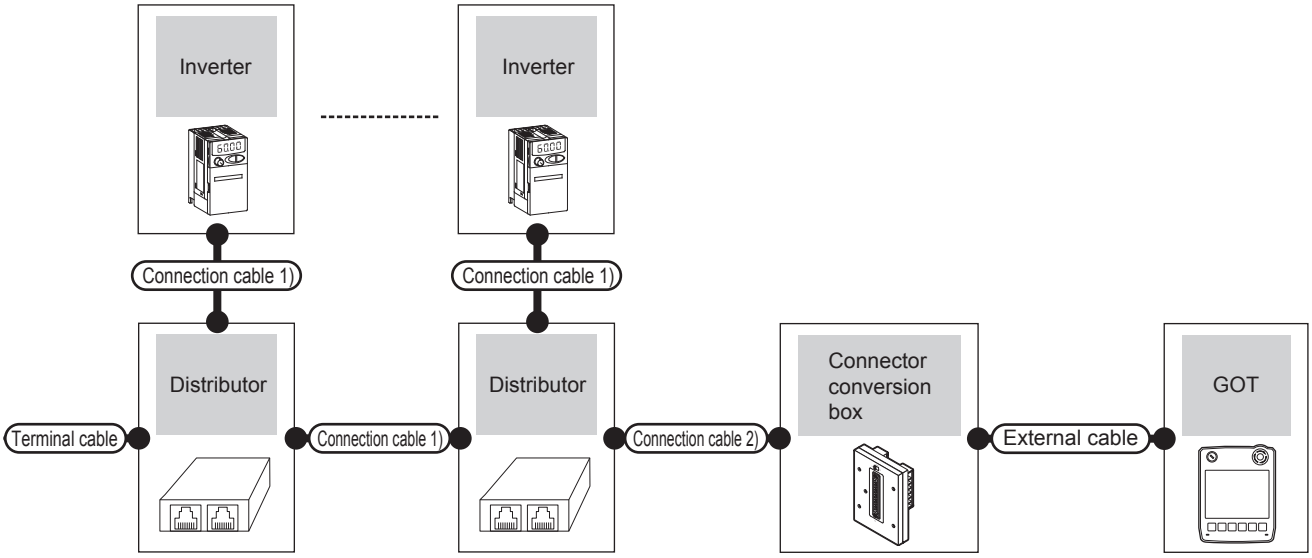

Inverter		Terminal cable	Connection cable 1)	Distributor*1	Connection cable 2)	Connector conversion box	External cable	GOT model	Total distance *2	Number of connectable equipment
Model	Communication type		Connection diagram number	Model	Connection diagram number					
FREQROL-A700/F700/F700P (PU port)	RS-422	RS422 connection diagram 13) User preparing	RS422 connection diagram 6) User preparing	BMJ-8 (Recommended)	RS422 connection diagram 1) User preparing	GT11H-CNB-37S	GT11H-C30-37P (3m) GT11H-C60-37P (6m) GT11H-C100-37P (10m)	GT14 Handy	13m	10 inverters for 1 GOT

*1 The distributor is a product manufactured by HACHIKO ELECTRIC CO., LTD. For details, contact HACHIKO ELECTRIC CO., LTD.

*2 The distance from the GOT to the inverter (Connection cable 1) + connection cable 2) + External cable)

(2) When using the external cable (GT11H-C□□□-37P)

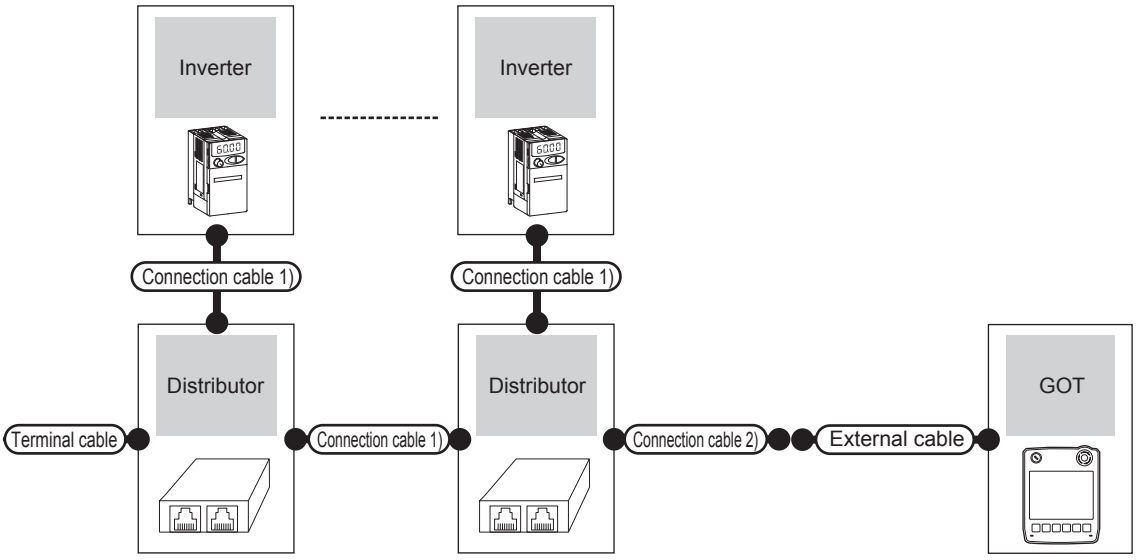

Inverter		Terminal cable	Connection cable 1)	Distributor*1	Connection cable 2)	External cable	GOT model	Total distance *2	Number of connectable equipment
Model	Communication type		Connection diagram number	Model	Connection diagram number				
FREQROL-A700/F700/F700P (PU port)	RS-422	RS422 connection diagram 13) User preparing	RS422 connection diagram 6) User preparing	BMJ-8 (Recommended)	RS422 connection diagram 2) User preparing	GT11H-C30-37P (3m) GT11H-C60-37P (6m) GT11H-C100-37P (10m)	GT14 Handy	13m	10 inverters for 1 GOT

*1 The distributor is a product manufactured by HACHIKO ELECTRIC CO., LTD. For details, contact HACHIKO ELECTRIC CO., LTD.

*2 The distance from the GOT to the inverter (Connection cable 1) + Connection cable 2) + External cable)

■ When connecting to multiple inverters (Max. 10) (Using the built-in RS485 terminal block)

Communication driver

FREQROL 500/700/800, SENSORLESS SERVO

(1) When using the connector conversion box

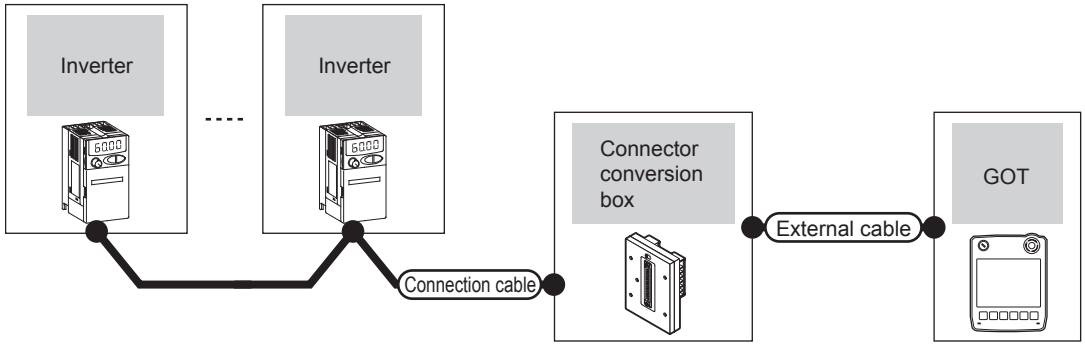

Inverter		Connection cable	Connector conversion box	External cable	GOT model	Total distance	Number of connectable equipment
Model	Communication type	Connection diagram number					
FREQROL-A700/F700/F700P (Built-in RS485 terminal block)	RS-422	User preparing RS422 connection diagram 17)	GT11H-CNB-37S	GT11H-C30-37P (3m) GT11H-C60-37P (6m) GT11H-C100-37P (10m)	GT14 Handy	13m	10 inverters for 1 GOT

(2) When using the external cable (GT11H-C□□□-37P)

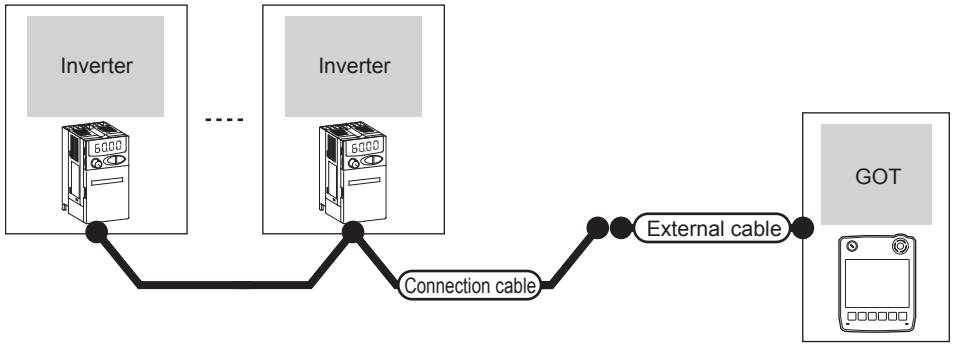

Inverter		Connection cable	External cable	GOT model	Total distance	Number of connectable equipment
Model	Communication type	Connection diagram number				
FREQROL-A700/F700/F700P (Built-in RS485 terminal block)	RS-422	User preparing RS422 connection diagram 18)	GT11H-C30-37P (3m) GT11H-C60-37P (6m) GT11H-C100-37P (10m)	GT14 Handy	13m	10 inverters for 1 GOT

(3) When using the external cable (GT11H-C□□□)

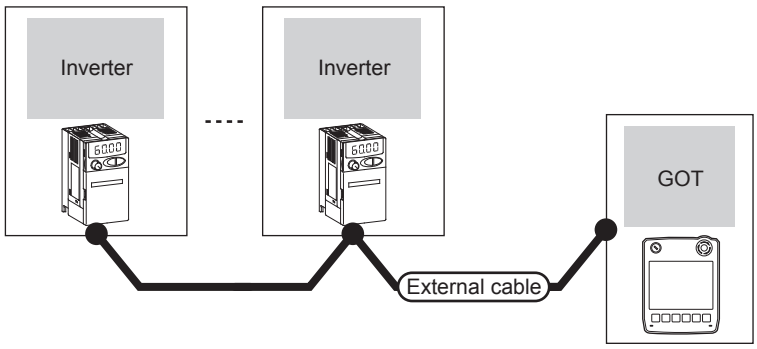

Inverter		External cable	GOT model	Total distance	Number of connectable equipment
Model	Communication type				
FREQROL-A700/F700/F700P (Built-in RS485 terminal block)	RS-422	GT11H-C30 (3m) GT11H-C60 (6m) GT11H-C100 (10m) User preparing RS422 connection diagram 19)	GT14 Handy	13m	10 inverters for 1 GOT

25.2.5 Connecting to FREQROL-A800/F800

Communication driver

FREQROL 500/700/800, SENSORLESS SERVO

■ When connecting to one inverter

(1) When using the connector conversion box

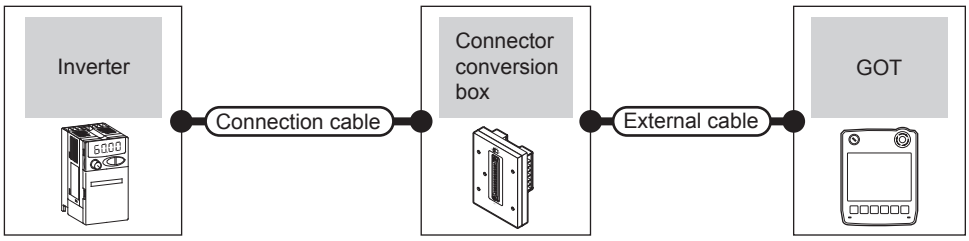

Inverter		Connection cable	Connector conversion box	External cable	GOT model	Total distance	Number of connectable equipment
Model	Communication type	Connection diagram number					
FREQROL-A800/F800 (PU port)	RS-422	User preparing RS422 connection diagram 1)	GT11H-CNB-37S	GT11H-C30-37P (3m) GT11H-C60-37P (6m) GT11H-C100-37P (10m)	GT14 Handy	13m	1 GOT for 1 inverter
FREQROL-A800/F800 (Built-in RS485 terminal block)	RS-422	User preparing RS422 connection diagram 7)					

(2) When using the external cable (GT11H-C□□□-37P)

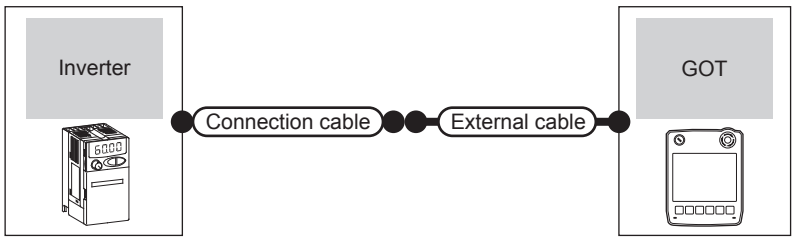

Inverter		Connection cable	External cable	GOT model	Total distance	Number of connectable equipment
Model	Communication type	Connection diagram number				
FREQROL-A800/F800 (PU port)	RS-422	User preparing RS422 connection diagram 2)	GT11H-C30-37P (3m) GT11H-C60-37P (6m) GT11H-C100-37P (10m)	GT14 Handy	13m	1 GOT for 1 inverter
FREQROL-A800/F800 (Built-in RS485 terminal block)	RS-422	User preparing RS422 connection diagram 8)				

(3) When using the external cable (GT11H-C□□□)

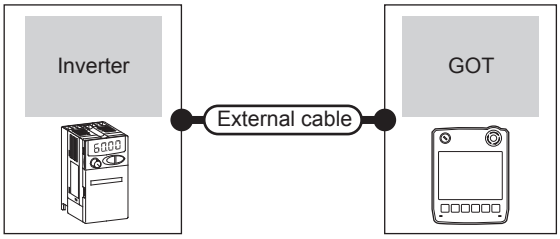

Communication driver

FREQROL 500/700/800, SENSORLESS SERVO

Inverter		External cable	GOT model	Total distance	Number of connectable equipment
Model	Communication type				
FREQROL-A800/F800 (Built-in RS485 terminal block)	RS-422	GT11H-C30 (3m) GT11H-C60 (6m) GT11H-C100 (10m) User preparing RS422 connection diagram 9)	GT14 Handy	13m	1 GOT for 1 inverter

■ When connecting to multiple inverters (Max. 10) (Using the distributor)

(1) When using the connector conversion box

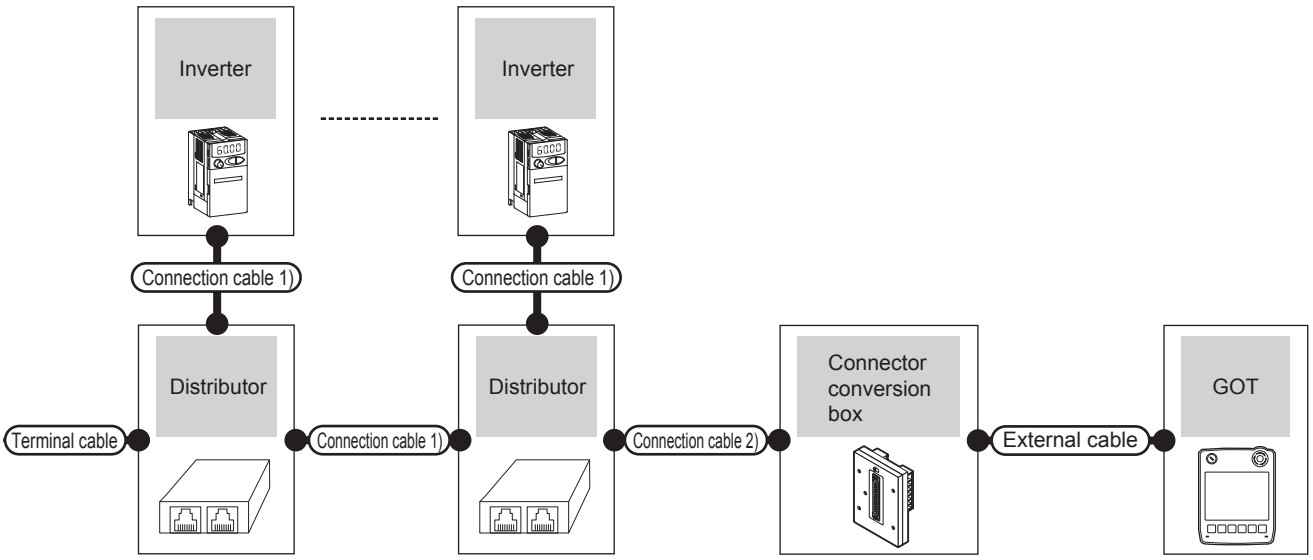

Inverter		Terminal cable	Connection cable 1)	Distributor*1	Connection cable 2)	Connector conversion box	External cable	GOT model	Total distance *2	Number of connectable equipment
Model	Communication type		Connection diagram number	Model	Connection diagram number					
FREQROL-A800/F800 (PU port)	RS-422	RS422 connection diagram 13) User preparing	RS422 connection diagram 6) User preparing	BMJ-8 (Recommended)	RS422 connection diagram 1) User preparing	GT11H-CNB-37S	GT11H-C30-37P (3m) GT11H-C60-37P (6m) GT11H-C100-37P (10m)	GT14 Handy	13m	10 inverters for 1 GOT

*1 The distributor is a product manufactured by HACHIKO ELECTRIC CO., LTD. For details, contact HACHIKO ELECTRIC CO., LTD.

*2 The distance from the GOT to the inverter (Connection cable 1) + connection cable 2) + External cable)

(2) When using the external cable (GT11H-C□□□-37P)

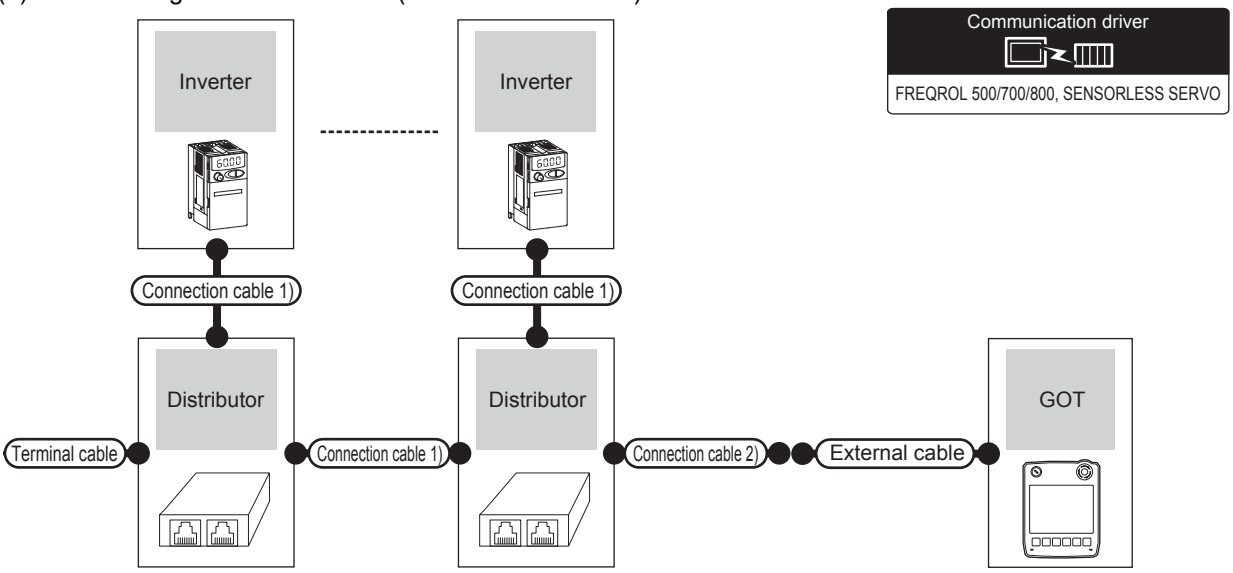

Inverter		Terminal cable	Connection cable 1)	Distributor*1	Connection cable 2)	External cable	GOT model	Total distance *2	Number of connectable equipment
Model	Communication type		Connection diagram number	Model	Connection diagram number				
FREQROL-A800/F800 (PU port)	RS-422	RS422 connection diagram 13) (User preparing)	RS422 connection diagram 6) (User preparing)	BMJ-8 (Recommended)	RS422 connection diagram 2) (User preparing)	GT11H-C30-37P (3m) GT11H-C60-37P (6m) GT11H-C100-37P (10m)	GT14 Handy	13m	10 inverters for 1 GOT

*1 The distributor is a product manufactured by HACHIKO ELECTRIC CO., LTD. For details, contact HACHIKO ELECTRIC CO., LTD.

*2 The distance from the GOT to the inverter (Connection cable 1) + Connection cable 2) + External cable)

■ When connecting to multiple inverters (Max. 10) (Using the built-in RS485 terminal block)

(1) When using the connector conversion box

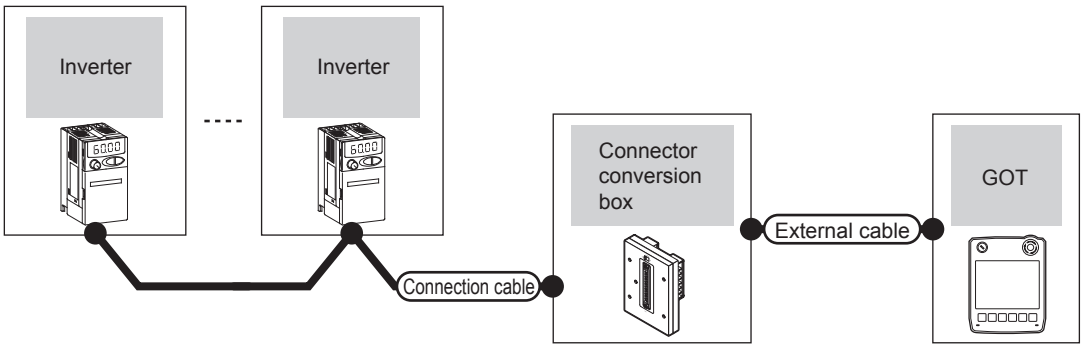

Inverter		Connection cable	Connector conversion box	External cable	GOT model	Total distance	Number of connectable equipment
Model	Communication type	Connection diagram number					
FREQROL-A800/F800 (Built-in RS485 terminal block)	RS-422	(User preparing) RS422 connection diagram 17)	GT11H-CNB-37S	GT11H-C30-37P (3m) GT11H-C60-37P (6m) GT11H-C100-37P (10m)	GT14 Handy	13m	10 inverters for 1 GOT

(2) When using the external cable (GT11H-C□□□-37P)

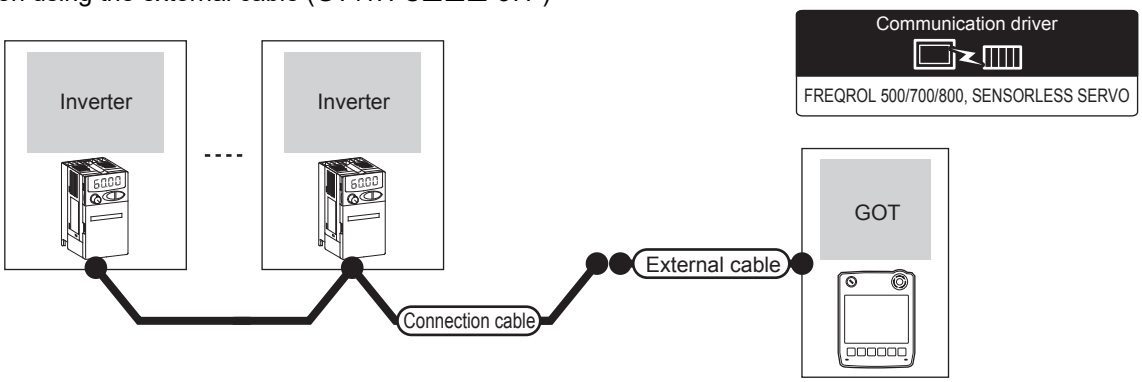

Inverter		Connection cable	External cable	GOT model	Total distance	Number of connectable equipment
Model	Communication type	Connection diagram number				
FREQROL-A800/F800 (Built-in RS485 terminal block)	RS-422	User preparing RS422 connection diagram 18)	GT11H-C30-37P (3m) GT11H-C60-37P (6m) GT11H-C100-37P (10m)	GT14 Handy	13m	10 inverters for 1 GOT

(3) When using the external cable (GT11H-C□□□)

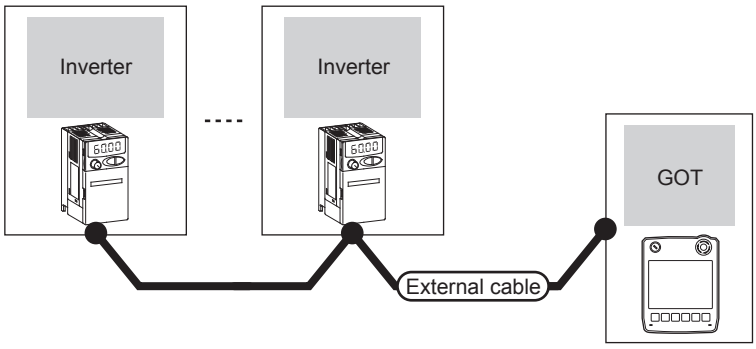

Inverter		External cable	GOT model	Total distance	Number of connectable equipment
Model	Communication type				
FREQROL-A800/F800 (Built-in RS485 terminal block)	RS-422	GT11H-C30 (3m) GT11H-C60 (6m) GT11H-C100 (10m) User preparing RS422 connection diagram 19)	GT14 Handy	13m	10 inverters for 1 GOT

25.2.6 Connecting to MD-CX522-□□K(-A0)

■ When connecting to one inverter

Communication driver

FREQROL 500/700/800, SENSORLESS SERVO

(1) When using the connector conversion box

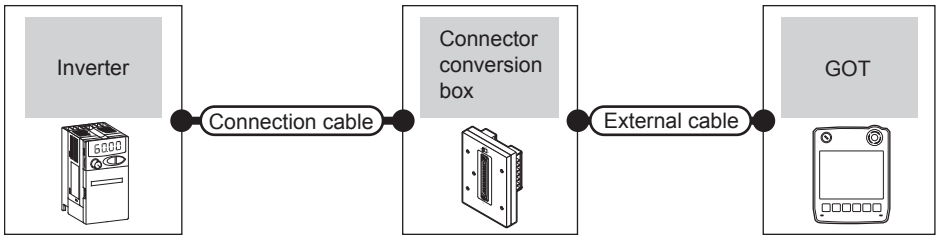

Inverter		Connection cable	Connector conversion box	External cable	GOT model	Total distance	Number of connectable equipment
Model	Communication type	Connection diagram number					
MD-CX522-□□K(-A0) *1	RS-422	User preparing RS422 connection diagram 1)	GT11H-CNB-37S	GT11H-C30-37P (3m) GT11H-C60-37P (6m) GT11H-C100-37P (10m)	GT14 Handy	13m	1 GOT for 1 inverter

*1 Connect to the PU port of the inverter.

(2) When using the external cable (GT11H-C□□□-37P)

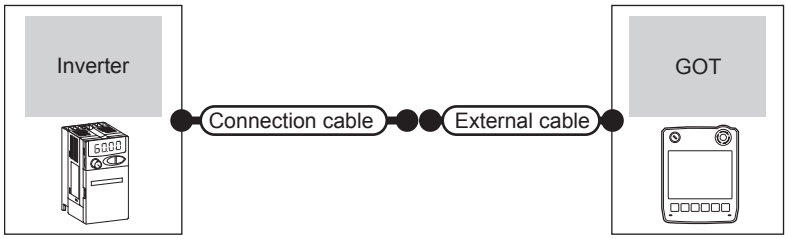

Inverter		Connection cable	External cable	GOT model	Total distance	Number of connectable equipment
Model	Communication type	Connection diagram number				
MD-CX522-□□K(-A0) *1	RS-422	User preparing RS422 connection diagram 1)	GT11H-C30-37P (3m) GT11H-C60-37P (6m) GT11H-C100-37P (10m)	GT14 Handy	13m	1 GOT for 1 inverter

*1 Connect to the PU port of the inverter.

(3) When using the external cable (GT11H-C□□□)

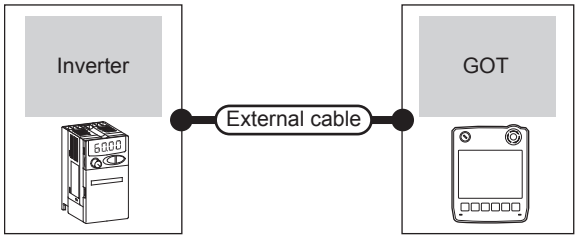

Inverter		External cable	GOT model	Total distance	Number of connectable equipment
Model	Communication type				
MD-CX522-□□K(-A0) *1	RS-422	GT11H-C30-37P (3m) GT11H-C60-37P (6m) GT11H-C100-37P (10m)	GT14 Handy	13m	1 GOT for 1 inverter

*1 Connect to the PU port of the inverter.

■ When connecting to multiple inverters (Max. 10) (Using the distributor)

Communication driver

FREQROL 500/700/800, SENSORLESS SERVO

(1) When using the connector conversion box

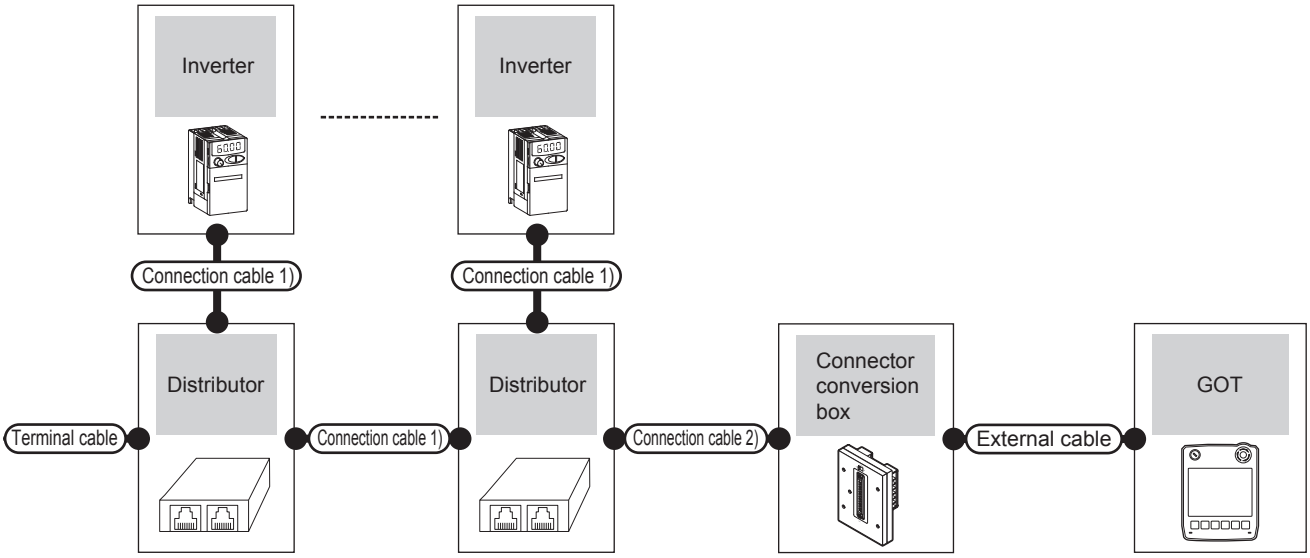

Inverter		Terminal cable	Connection cable 1)	Distributor*2	Connection cable 2)	Connector conversion box	External cable	GOT model	Total distance *3	Number of connectable equipment
Model	Communication type		Connection diagram number	Model	Connection diagram number					
MD-CX522-□□K(-A0) *1	(RS-422)	RS422 connection diagram 6) User preparing	RS422 connection diagram 6) User preparing	BMJ-8 (Recommended)	RS422 connection diagram 1) User preparing	GT11H-CNB-37S	GT11H-C30-37P (3m) GT11H-C60-37P (6m) GT11H-C100-37P (10m)	GT14 Handy	13m	10 inverters for 1 GOT

*1 Connect to the PU port of the inverter.

*2 The distributor is a product manufactured by HACHIKO ELECTRIC CO., LTD. For details, contact HACHIKO ELECTRIC CO., LTD.

*3 The distance from the GOT to the inverter (Connection cable 1) + Connection cable 2) + External cable)

(2) When using the external cable (GT11H-C□□□-37P)

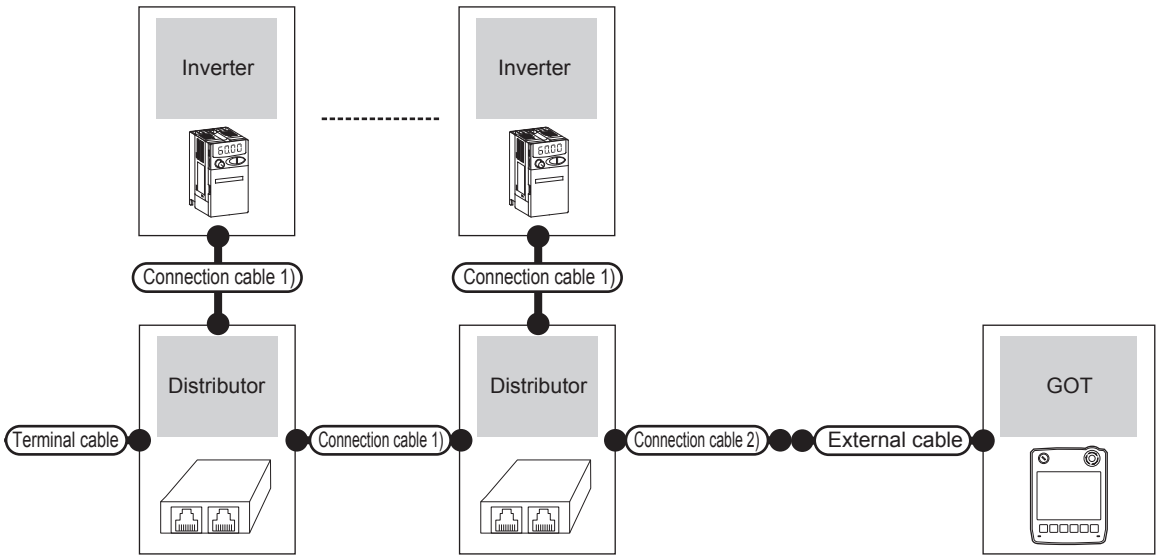

Inverter		Terminal cable	Connection cable 1)	Distributor*2	Connection cable 2)	External cable	GOT model	Total distance *3	Number of connectable equipment
Model	Communication type		Connection diagram number	Model	Connection diagram number				
MD-CX522-□□K(-A0)*1	(RS-422)	RS422 connection diagram 6) User preparing	RS422 connection diagram 6) User preparing	BMJ-8 (Recommended)	RS422 connection diagram 1) User preparing	GT11H-C30-37P (3m) GT11H-C60-37P (6m) GT11H-C100-37P (10m)	GT14 Handy	13m	10 inverters for 1 GOT

*1 Connect to the PU port of the inverter.
*2 The distributor is a product manufactured by HACHIKO ELECTRIC CO., LTD. For details, contact HACHIKO ELECTRIC CO., LTD.
*3 The distance from the GOT to the inverter (Connection cable 1) + Connection cable 2) + External cable)

(3) When using the external cable (GT11H-C□□□)

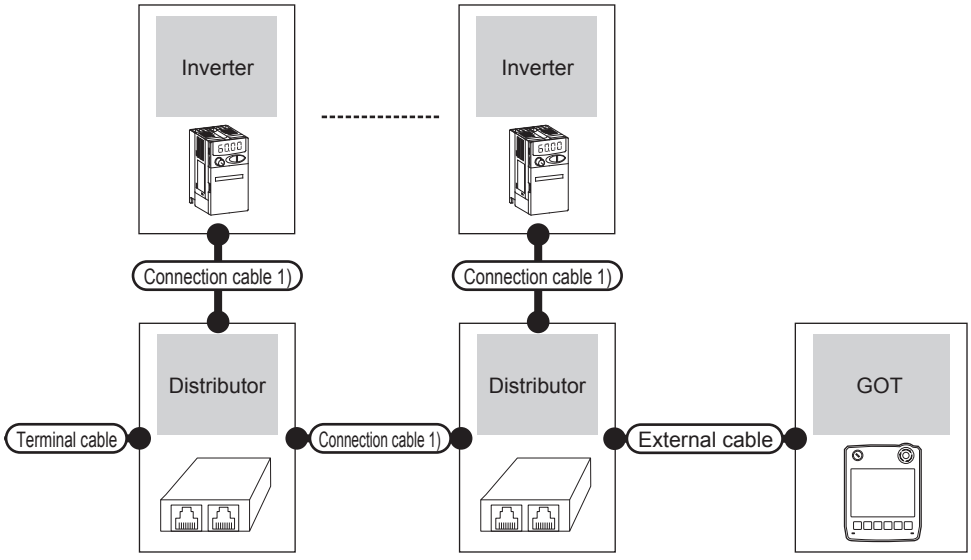

Inverter		Terminal cable	Connection cable 1)	Distributor*2	External cable	GOT model	Total distance *3	Number of connectable equipment
Model	Communication type		Connection diagram number	Model				
MD-CX522-□□K(-A0)*1	RS-422	RS422 connection diagram 6) User preparing	RS422 connection diagram 6) User preparing	BMJ-8 (Recommended)	GT11H-C30-37P (3m) GT11H-C60-37P (6m) GT11H-C100-37P (10m)	GT14 Handy	13m	10 inverters for 1GOT

*1 Connect to the PU port of the inverter.
*2 The distributor is a product manufactured by HACHIKO ELECTRIC CO., LTD. For details, contact HACHIKO ELECTRIC CO., LTD.
*3 The distance from the GOT to the inverter (Connection cable 1) + Connection cable 2) + External cable)

25.3 Connection Diagram

The following diagram shows the connection between the GOT and the inverter.

25.3.1 RS-422 cable

■ Connection diagram

RS422 connection diagram 1)

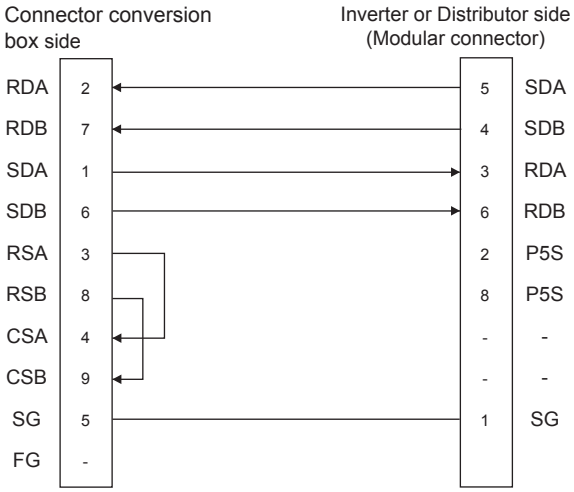

RS422 connection diagram 2)

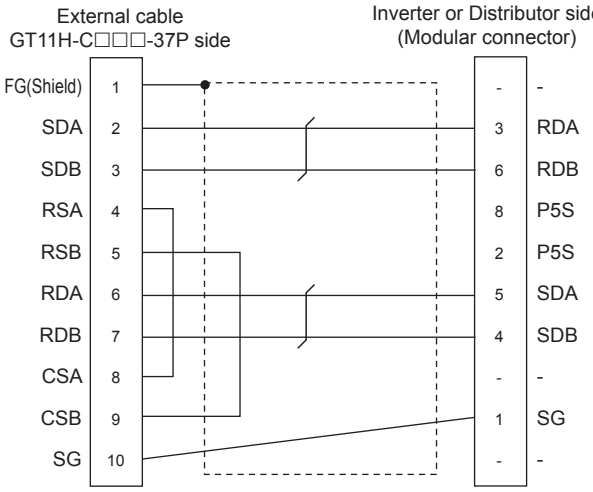

RS422 connection diagram 3)

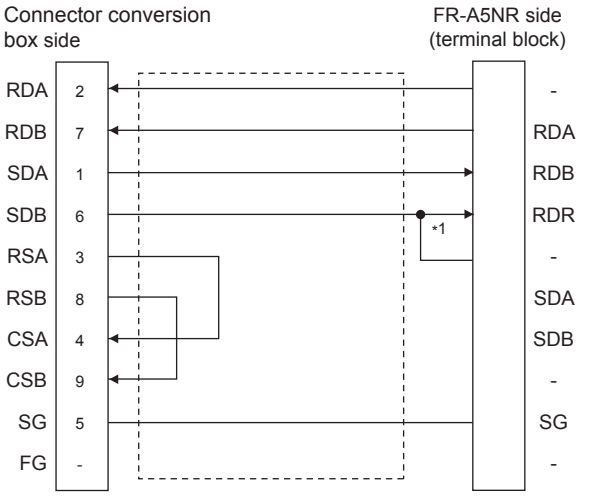

*1 Connect a terminating resistor jumper to RDB and RDR. The terminating resister jumper is packed together with the FR-A5NR.

RS422 connection diagram 4)

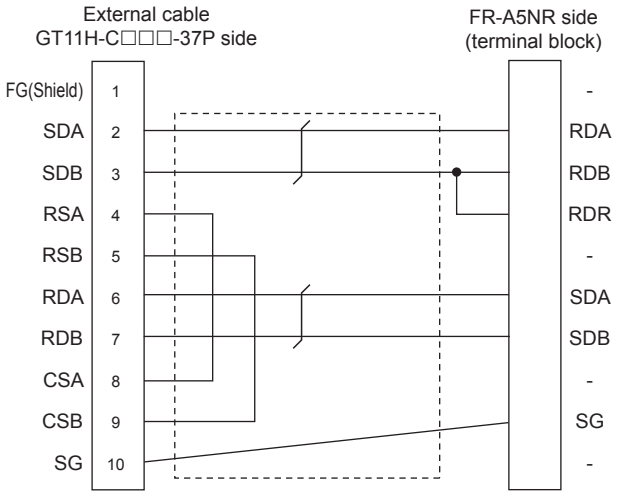

RS422 connection diagram 5)

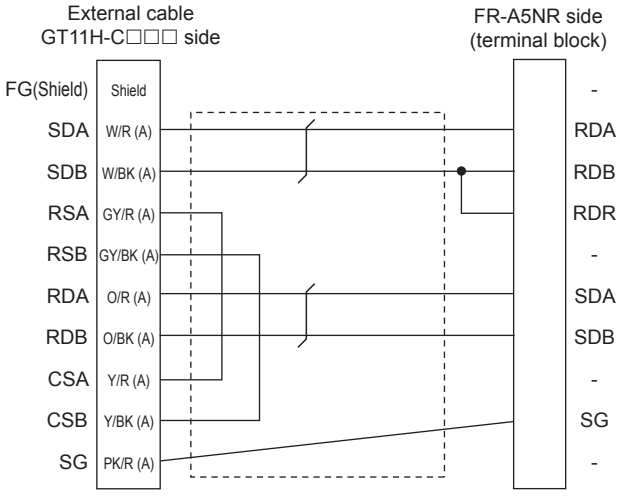

RS422 connection diagram 6)

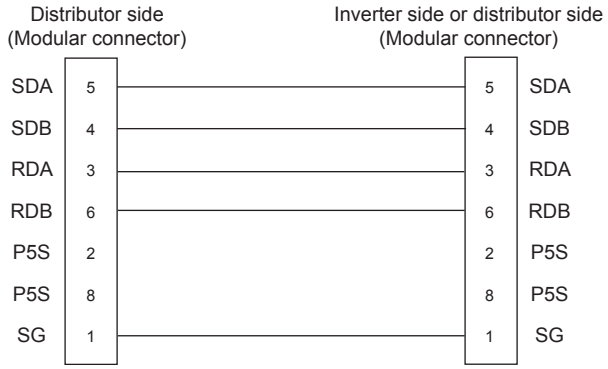

RS422 connection diagram 7)

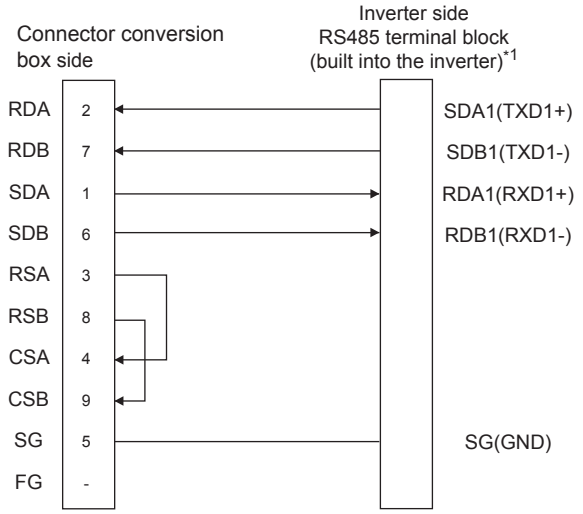

*1 RDA2, RDB2, SDA2, and SDB2 terminals of the RS485 terminal block (built into the inverter) cannot be used.

RS422 connection diagram 8)

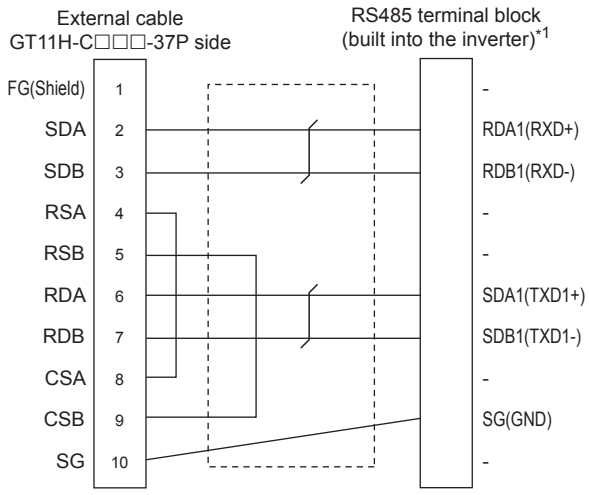

*1 RDA2, RDB2, SDA2, and SDB2 terminals of the RS485 terminal block (built into the inverter) cannot be used.

RS422 connection diagram 9)

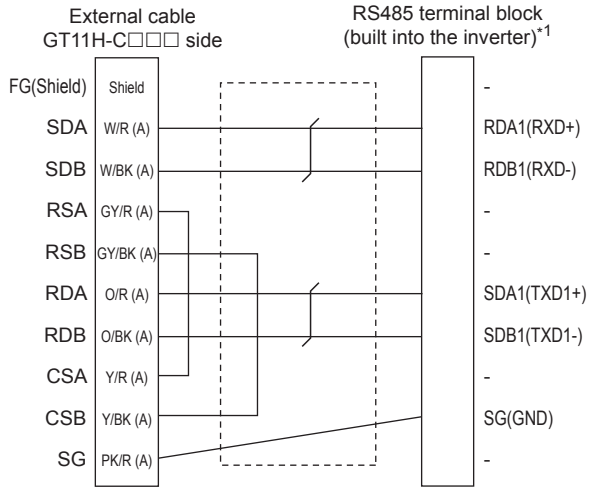

*1 RDA2, RDB2, SDA2, and SDB2 terminals of the RS485 terminal block (built into the inverter) cannot be used.

RS422 connection diagram 10)

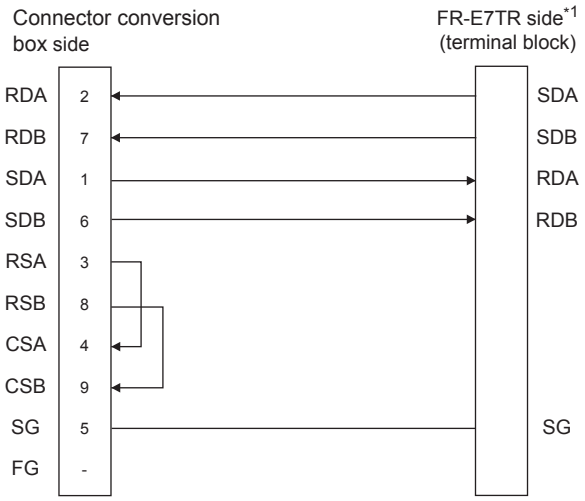

*1 Turn ON (100Ω) the terminator switch of the FR-E7TR farthest from the GOT.

RS422 connection diagram 11)

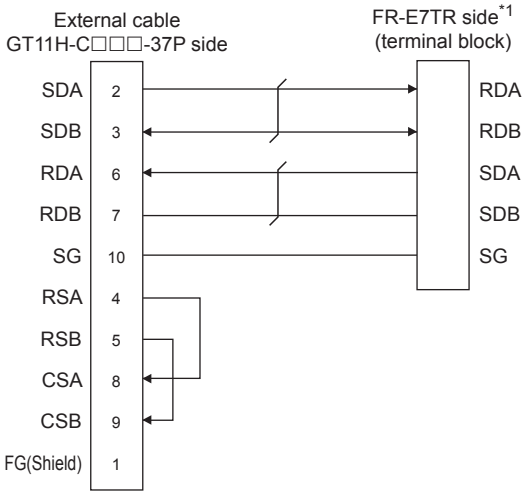

*1 Turn ON (100Ω) the terminator switch of the FR-E7TR farthest from the GOT.

RS422 connection diagram 12)

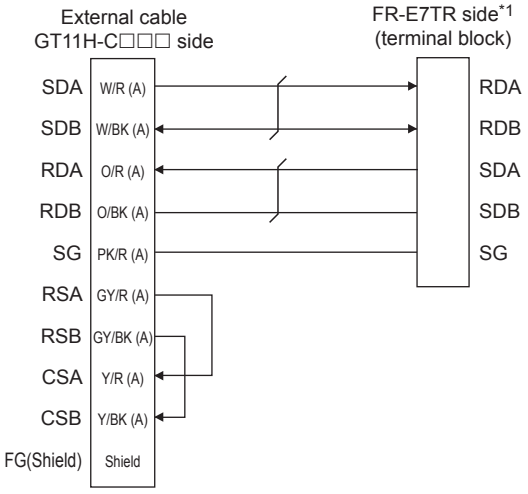

*1 Turn ON (100Ω) the terminator switch of the FR-E7TR farthest from the GOT.

RS422 connection diagram 13)

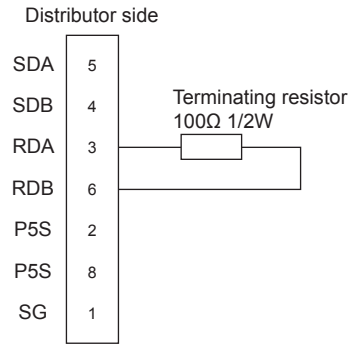

RS422 connection diagram 14)

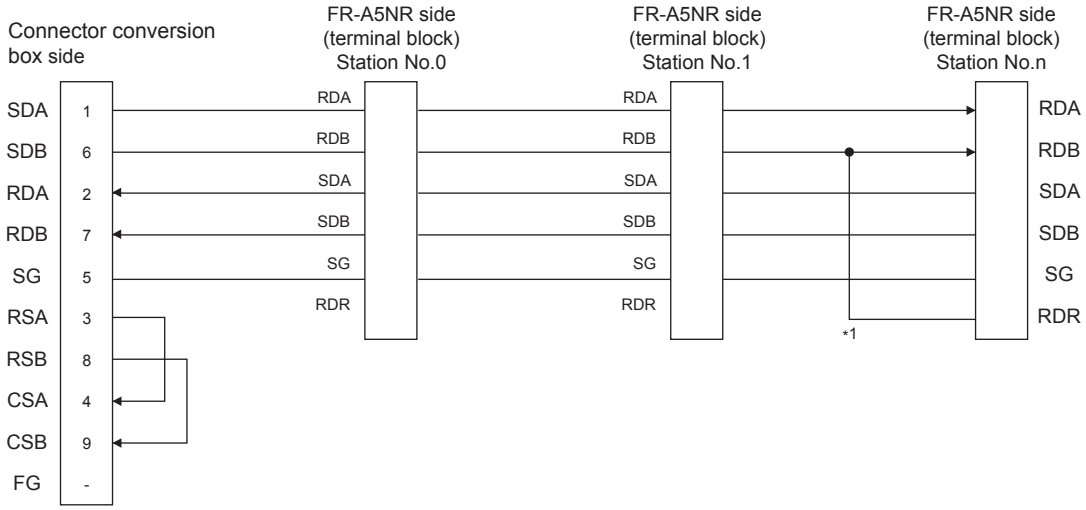

*1 Connect a terminating resistor jumper to RDB and RDR which are assigned in the FR-A5NR of the inverter located farthest from the GOT.
The terminating resister jumper is packed together with the FR-A5NR.

RS422 connection diagram 15)

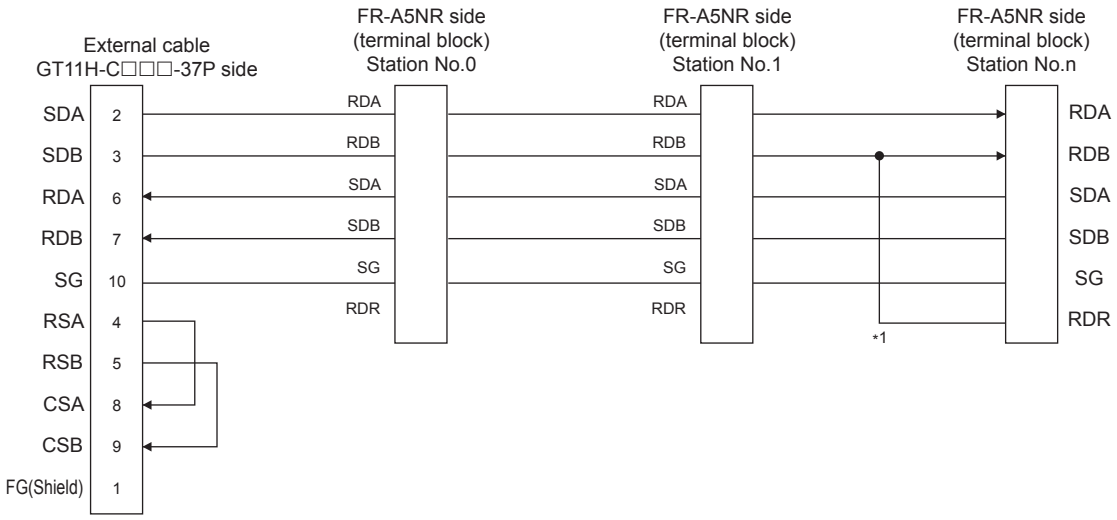

*1 Connect a terminating resistor jumper to RDB and RDR which are assigned in the FR-A5NR of the inverter located farthest from the GOT1000. The terminating resister jumper is packed together with the FR-A5NR.

RS422 connection diagram 16)

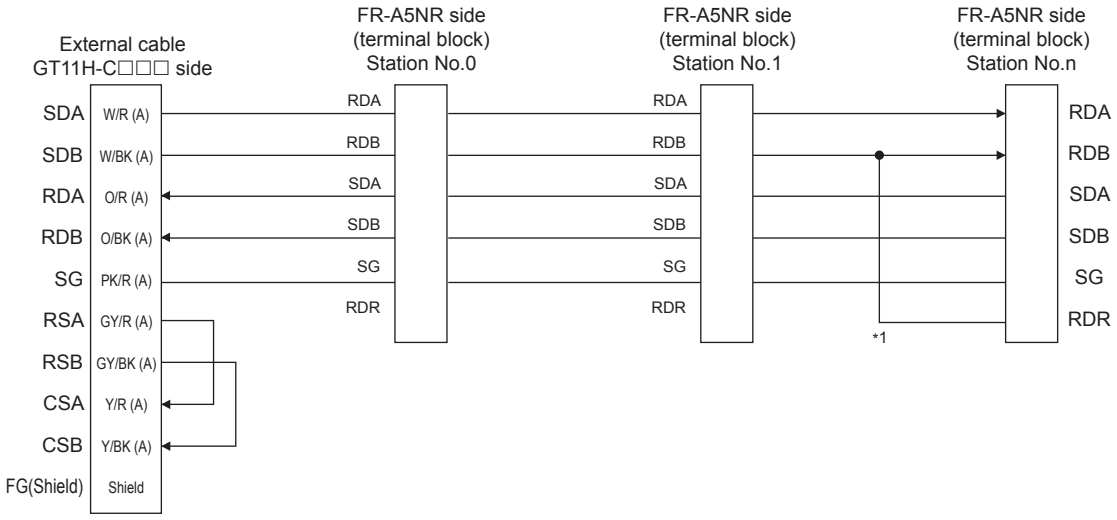

*1 Connect a terminating resistor jumper to RDB and RDR which are assigned in the FR-A5NR of the inverter located farthest from the GOT1000. The terminating resister jumper is packed together with the FR-A5NR.

RS422 connection diagram 17)

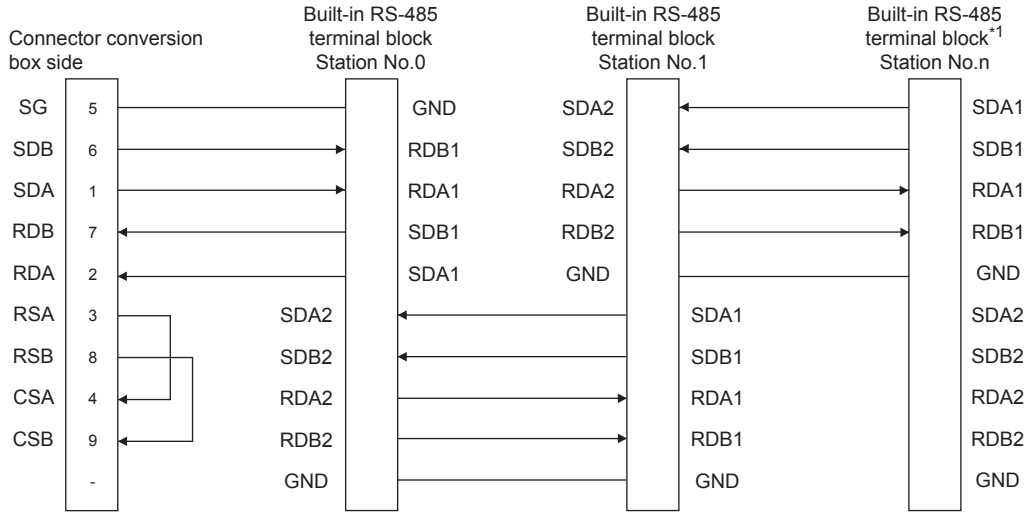

*1 Turn ON (100Ω) the terminator switch built in the inverter farthest from the GOT.

RS422 connection diagram 18)

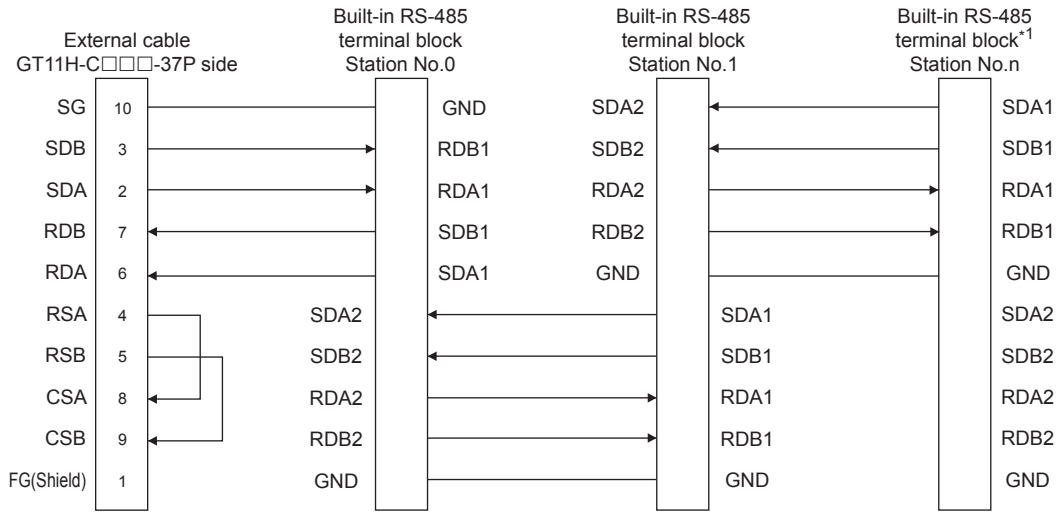

*1 Turn ON (100Ω) the terminator switch built in the inverter farthest from the GOT.

RS422 connection diagram 19)

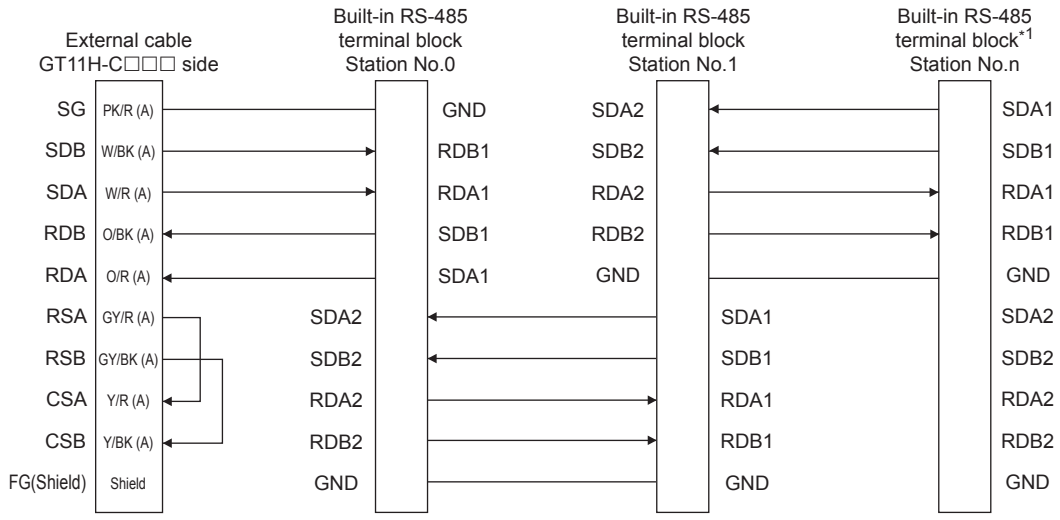

*1 Turn ON (100Ω) the terminator switch built in the inverter farthest from the GOT.

RS422 connection diagram 20)

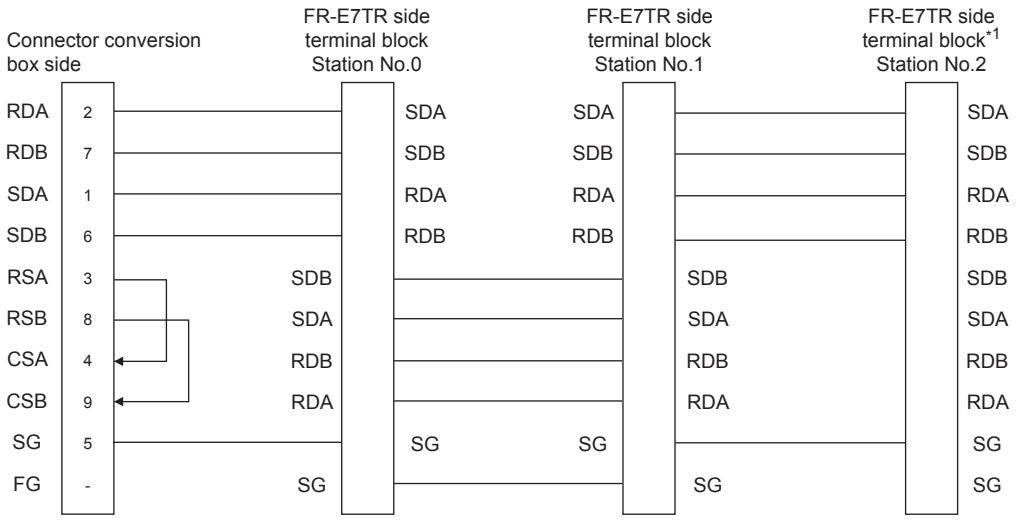

*1 Turn ON (100Ω) the terminator switch of the FR-E7TR farthest from the GOT.

RS422 connection diagram 21)

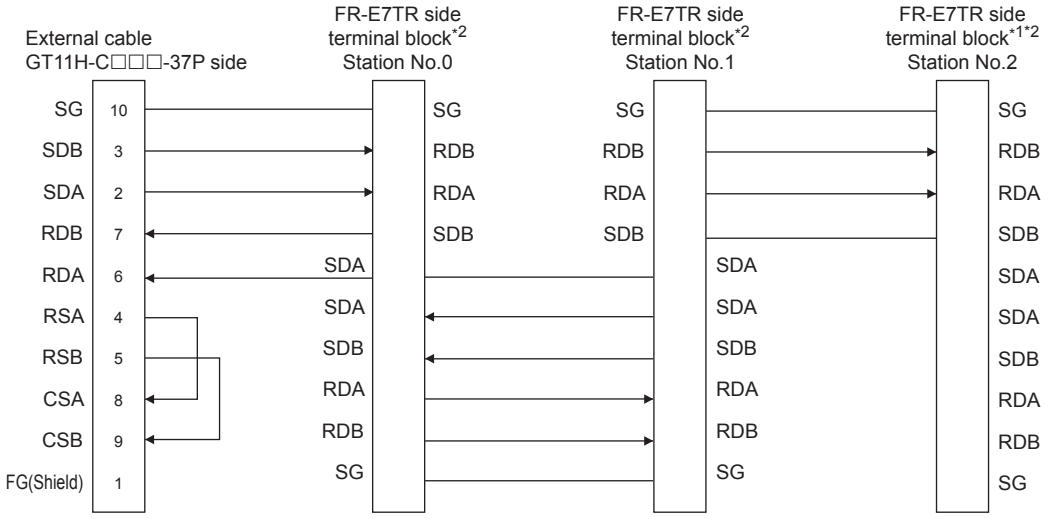

*1 Turn ON (100Ω) the terminator switch of the FR-E7TR connected to the inverter farthest from the GOT1000.
*2 For details about the method of transition wiring, refer to the control terminal option FR-E7TR INSTRUCTION MANUAL.

RS422 connection diagram 22)

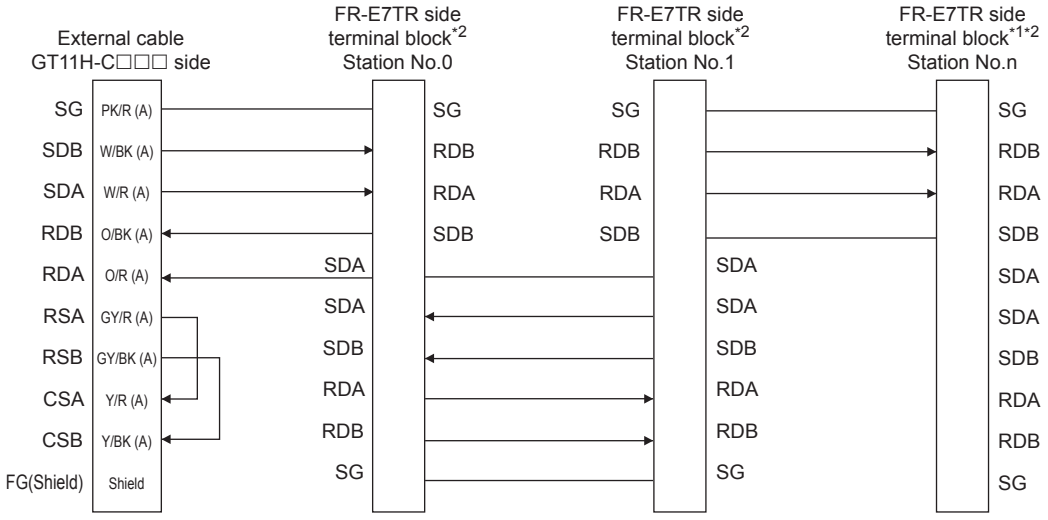

*1 Turn ON (100Ω) the terminator switch of the FR-E7TR connected to the inverter farthest from the GOT1000.
*2 For details about the method of transition wiring, refer to the control terminal option FR-E7TR INSTRUCTION MANUAL.

■ Precautions when preparing a cable

(1) Cable length
The total distance (between GOT and inverters) of the RS-422 cable must be 13m or less.

(2) Connector conversion box side connector
For the connector conversion box side connector, refer to the following.

☞ 6.6 Connector Conversion Box

(3) External cable side connector
For the connector specifications of the external cable side, refer to the following.

☞ 8.2 External Cable, Relay Cable

(4) Inverter connector specifications

(a) Pin layout in the PU port

When seen from the front of the inverter (receptacle side)

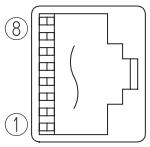

Modular jack

Pin No.	Signal name	Remark
1	GND (SG)	
2	(P5S)	Not used
3	RXD+ (RDA)	
4	TXD- (SDB)	
5	TXD+ (SDA)	
6	RXD- (RDB)	
7	GND (SG)	
8	(P5S)	Not used

The contents inside ( ) indicate symbols described in the inverter manual.
The pins number 2 and 8 (P5S) are connected to the power supply for an operation panel or a parameter unit.
Do not use them in RS-422 communication.

(b) Connector of cable between FREQROL Series inverters
Use the commercial connectors and cables shown in the table below or the comparable products. (Refer to the manual for the inverter.)

Name	Model	Specifications	Manufacturer
Connector	5-554720-3	RJ45 connector	Tyco International, Ltd
Modular ceiling rosette (Distributor)	BMJ-8	-	HACHIKO ELECTRIC CO.,LTD. TEL (03)-3806-9171
Cable	SGLPEV 0.5mm×4P	Cable conforming to EIA568 (such as cable 10BASE-T)	MITSUBISHI CABLE INDUSTRIES, LTD.

(5) Terminal block layout in the FR-A5NR computer link option
Attach this option to the A500 and F500 Series.

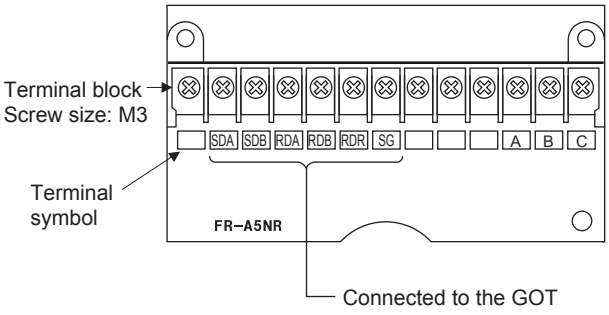

(6) Terminal block layout in the FR-E7TR control terminal option
Mount the FR-E7TR to the E700 series

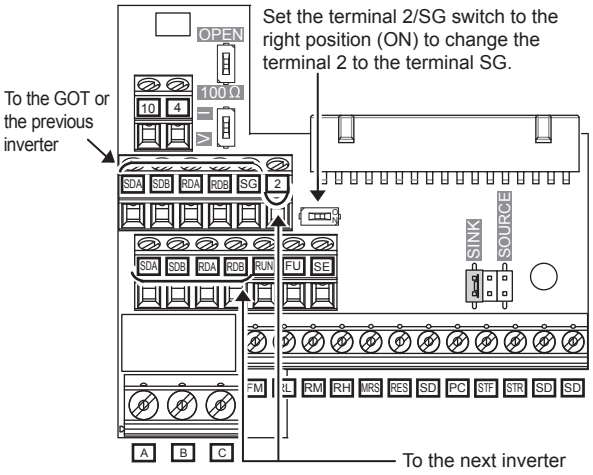

25.4 GOT Side Settings

25.4.1 Setting communication interface (Communication settings)

Set the channel of the connected equipment.

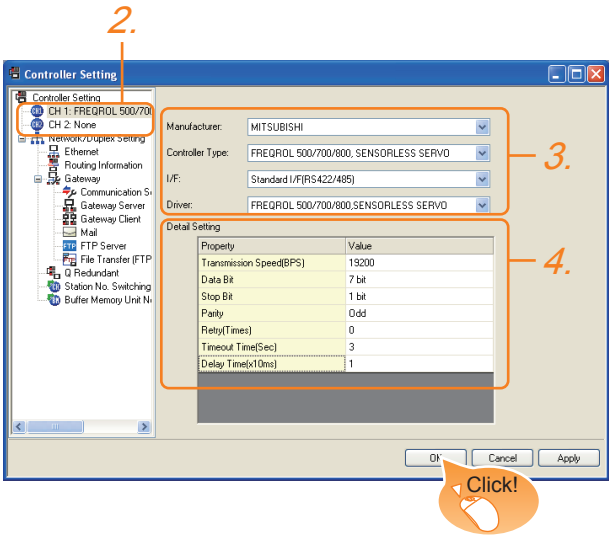

1. Select [Common] → [Controller Setting] from the menu.
2. The Controller Setting window is displayed. Select the channel to be used from the list menu.
3. Set the following items.
   - Manufacturer: Mitsubishi
   - Controller Type: Set according to the Controller Type to be connected.
   - I/F: Interface to be used
   - Driver: FREQROL 500/700/800, SENSORLESS SERVO
4. The detailed setting is displayed after Manufacturer, Controller Type, I/F, and Driver are set.
   Make the settings according to the usage environment.
   25.4.2 Communication detail settings

Click the OK button when settings are completed.

POINT

The settings of connecting equipment can be confirmed in [I/F Communication Setting].
For details, refer to the following.
18.1.2 I/F communication setting

25.4.2 Communication detail settings

Make the settings according to the usage environment.

Item	Description	Range
Transmission Speed	Set this item when change the transmission speed used for communication with the connected equipment. (Default: 19200bps)	9600bps, 19200bps, 38400bps, 57600bps, 115200bps
Data Bit	Set this item when change the data length used for communication with the connected equipment. (Default: 7bits)	7bits/8bits
Stop Bit	Specify the stop bit length for communications. (Default: 1bit)	1bit/2bits
Parity	Specify whether or not to perform a parity check, and how it is performed during communication. (Default: Odd)	None Even Odd
Retry	Set the number of retries to be performed when a communication error occurs. (Default: 0time)	0 to 5times
Timeout Time	Set the time period for a communication to time out. (Default: 3sec)	1 to 30sec
Delay Time	Set this item to adjust the transmission timing of the communication request from the GOT. (Default: 10ms)	0 to 300ms

POINT

(1) Communication interface setting by Utility
The communication interface setting can be changed on the Utility's [Communication setting] after writing [Communication Settings] of project data.
For details on the Utility, refer to the following manual.
11. COMMUNICATION INTERFACE SETTING (COMMUNICATION SETTING)

(2) Precedence in communication settings
When settings are made by GT Designer3 or the Utility, the latest setting is effective.

HINT

Cutting the portion of multiple connection of the controller
By setting GOT internal device, GOT can cut the portion of multiple connection of the controller. For example, faulty station that has communication timeout can be cut from the system.
For details of the setting contents of GOT internal device, refer to the following manual.
GT Designer3 Version1 Screen Design Manual

25.5 FREQROL Series Inverter Side Settings

For details of the inverter, refer to the manual of each series.

25.5.1 Connecting to FREQROL-S500, S500E, or F500J series

■ Communication settings

Make the communication settings of the inverter.
Be sure to perform the inverter reset after updating each parameter.

(1) Communication port and corresponding parameters

GOT connection destination	Parameters corresponding to inverter
RS-485 port	Pr.79, n1 to n7, n10 to n12

(2) Communication settings of inverter

Set the following parameters using the PU (parameter unit). Set Pr.30 (Extended function selection) to 1 [With display] before making the parameter settings.
Do not change these parameters, even though they can be monitored from the GOT. If they are changed, communication with the GOT is disabled

Setting item*1	Parameter No.*4	Set value	Settings
Communication station number	n1 (331)	0 to 31	25.5.13 Station number setting
Communication speed*2	n2 (332)	192*3	19200bps
Stop bit length*2	n3 (333)	10	Data length: 7bit Stop bit length: 1bit
Parity check presence/ absence*2	n4 (334)	1	Odd
Number of communication retries	n5 (335)	--- (65535)	The inverter will not come to an alarm stop.
Communication check time interval	n6 (336)	---	Communication check suspension
Wait time setting	n7 (337)	0	0ms
CR/LF selection	n11 (341)	1*3	With CR Without LF
Protocol selection*5	-	-	-
Operation mode selection	Pr.79	0*3	External operation mode at power on
Link start mode selection	n10 (340)	1	Computer link operation
E^{2}PROM write selection	n12 (342)	0*3	Written to RAM and EEPROM

*1 Setting items are parameter names described in the manual of FREQROL-S500, S500E, and F500J series.
*2 Settings on the GOT can be changed.
When changing the settings on the GOT, be sure to change the parameters on the inverter to correspond with the GOT settings.
*3 Inverter default values (No need to change)
*4 When being monitored from the GOT, the parameter n1 through n7 correspond with Pr.331 through Pr.337, and the parameter n10 through n12 correspond with Pr.340 through Pr.342.
Numbers in brackets show the parameter number when the parameter unit is in use.
*5 There is no setting for this item on the inverter side.

25.5.2 Connecting to FREQROL-E500 series

■ Communication settings

Make the communication settings of the inverter.
Be sure to perform the inverter reset after updating each parameter.

(1) Communication port and corresponding parameters

GOT connection destination	Parameters corresponding to inverter
PU connector	Pr.79, Pr.117 to Pr.124, Pr.146, Pr.342

(2) Communication settings of inverter

Set the following parameters using the PU (parameter unit).
Do not change these parameters, even though they can be monitored from the GOT. If they are changed, communication with the GOT is disabled

Setting item*1	Parameter No.	Set value	Settings
Communication station number	Pr.117	0 to 31	25.5.13 Station number setting
Communication speed*2	Pr.118	192*3	19200bps
Stop bit length*2	Pr.119	10	Data length: 7bit Stop bit length: 1bit
Parity check presence/ absence*2	Pr.120	1	Odd
Number of communication retries	Pr.121	9999 (65535)	The inverter will not come to an alarm stop.
Communication check time interval	Pr.122	9999	Communication check suspension
Wait time setting	Pr.123	0	0ms
CR/LF presence/absence selection	Pr.124	1*3	With CR Without LF
Protocol selection*4	-	-	-
Operation mode selection	Pr.79	1*3	PU operation mode
Communication startup mode selection*4	-	-	-
E^{2}PROM write selection	Pr.342	0*3	Written to RAM and EEPROM
Frequency setting command selection*5	Pr.146	9999	Built-in frequency setting potentiometer invalid

*1 Setting items are parameter names described in the manual of FREQROL-E500 series.
*2 Settings on the GOT can be changed.
When changing the settings on the GOT, be sure to change the parameters on the inverter to correspond with the GOT settings.
*3 Inverter default values (No need to change)
*4 There is no setting for this item on the inverter side.
*5 The setting is required for Frequency setting command selection.

25.5.3 Connecting to FREQROL-F500, F500L series

■ Communication settings

Make the communication settings of the inverter.
Be sure to perform the inverter reset after updating each parameter.

(1) Communication port and corresponding parameters

GOT connection destination	Parameters corresponding to inverter
PU connector	Pr.79, Pr.117 to Pr.124
FR-A5NR (Option unit)	Pr.79, Pr.331 to Pr.337, Pr.340 to Pr.342

(2) Communication settings of inverter
Set the following parameters using the PU (parameter unit). Set Pr.160 (user group read selection) to 0 [All parameters can be accessed for reading and writing.] before making the parameter settings.
Do not change these parameters, even though they can be monitored from the GOT. If they are changed, communication with the GOT is disabled

Setting item*1	Parameter No.		Set value		Settings
	PU connector	FR-A5NR			
Communication station number	Pr.117	Pr.331	0 to 31		25.5.13 Station number setting
Communication speed*2	Pr.118	Pr.332	192*4		19200bps
Stop bit length/data length/Stop bit length*2	Pr.119	Pr.333	10		Data length: 7bit Stop bit length: 1bit
Parity check presence/ absence*2	Pr.120	Pr.334	1		Odd
Number of communication retries	Pr.121	Pr.335	9999		The inverter will not come to an alarm stop.
Communication check time interval	Pr.122	Pr.336	9999		Communication check suspension
Wait time setting	Pr.123	Pr.337	0		0ms
CR/LF presence/ absence selection	Pr.124	Pr.341	1*3		With CR Without LF
Protocol selection*5	-	-	-		-
Operation mode selection	Pr.79		PU connector	1	PU operation mode
			FR-A5NR	0*3	External operation mode at power on
Link start mode selection*6	-	Pr.340	1		Computer link operation
E2PROM write selection*6	-	Pr.342	0*3		Written to RAM and EEPROM

*1 Setting items are parameter names described in the manual of FREQROL-F500, F500L, F500J series and FR-A5NR.
*2 Settings on the GOT can be changed.
When changing the settings on the GOT, be sure to change the parameters on the inverter to correspond with the GOT settings.
*3 Inverter default values (No need to change)
*4 Since the value has been set as a default, no setting is required when the GOT is connected to the PU connector on the inverter side.
*5 There is no setting for this item on the inverter side.
*6 The setting is required on the inverter side when FR-A5NR is used.

25.5.4 Connecting to FREQROL-A500 or A500L series

■ Communication settings

Make the communication settings of the inverter.
Be sure to perform the inverter reset after updating each parameter.

(1) Communication port and corresponding parameters

GOT connection destination	Parameters corresponding to inverter
PU connector	Pr.79, Pr.117 to Pr.124, Pr.342
FR-A5NR (Option unit)	Pr.79, Pr.331 to Pr.337, Pr.340 to Pr.342

(2) Communication settings of inverter
Set the following parameters using the PU (parameter unit). Do not change these parameters, even though they can be monitored from the GOT. If they are changed, communication with the GOT is disabled

Setting item*1	Parameter No.		Set value		Settings
	PU connector	FR-A5NR			
Communication station number	Pr.117	Pr.331	0 to 31		25.5.13 Station number setting
Communication speed*2	Pr.118	Pr.332	192*4		19200bps
Stop bit length*2	Pr.119	Pr.333	10		Data length: 7bit Stop bit length: 1bit
Parity check presence/ absence*2	Pr.120	Pr.334	1		Odd
Number of communication retries	Pr.121	Pr.335	9999		The inverter will not come to an alarm stop.
Communication check time interval	Pr.122	Pr.336	9999		Communication check suspension
Wait time setting	Pr.123	Pr.337	0		0ms
CR/LF presence/ absence selection	Pr.124	Pr.341	1*3		With CR Without LF
Protocol selection*5	-	-	-		-
Operation mode selection	Pr.79		PU connector	1	PU operation mode
			FR-A5NR	0*3	External operation mode at power on
Link start mode selection*6	-	Pr.340	1		Computer link operation
E2PROM write selection	Pr.342		0*3		Written to RAM and EEPROM

*1 Setting items are parameter names described in the manual of FREQROL-A500, A500L series and FR-A5NR.
*2 Settings on the GOT can be changed.
When changing the settings on the GOT, be sure to change the parameters on the inverter to correspond with the GOT settings.
*3 Inverter default values (No need to change)
*4 Since the value has been set as a default, no setting is required when the GOT is connected to the PU connector on the inverter side.
*5 There is no setting for this item on the inverter side.
*6 The setting is required on the inverter side when FR-A5NR is used.

25.5.5 Connecting to FREQROL-V500 or V500L series

■ Communication settings

Make the communication settings of the inverter.
Be sure to perform the inverter reset after updating each parameter.

(1) Communication port and corresponding parameters

GOT connection destination	Parameters corresponding to inverter
PU connector	Pr.79, Pr.117 to Pr.124, Pr.342
FR-A5NR (Option unit)	Pr.79, Pr.331 to Pr.337, Pr.340 to Pr.342

(2) Communication settings of inverter

Set the following parameters using the PU (parameter unit). Set Pr.160 (Extended function display selection) to 1 [All parameters can be accessed for reading and writing.] before making the parameter settings.
Do not change these parameters, even though they can be monitored from the GOT. If they are changed, communication with the GOT is disabled

Setting item*1	Parameter No.		Set value		Settings
	PU connector	FR-A5NR			
Communication station number	Pr.117	Pr.331	0 to 31		25.5.13 Station number setting
Communication speed*2	Pr.118	Pr.332	192*4		19200bps
Stop bit length/data length/Stop bit length*2	Pr.119	Pr.333	10		Data length: 7bit Stop bit length: 1bit
Parity check presence/ absence*2	Pr.120	Pr.334	1		Odd
Number of communication retries	Pr.121	Pr.335	9999		The inverter will not come to an alarm stop.
Communication check time interval	Pr.122	Pr.336	9999		Communication check suspension
Wait time setting	Pr.123	Pr.337	0		0ms
CR/LF presence/ absence selection	Pr.124	Pr.341	1*3		With CR, without LF
Protocol selection*5	-	-	-		-
Operation mode selection	Pr.79		PU connector	1	PU operation mode
			FR-A5NR	0*3	External operation mode at power on
Link start mode selection*6	-	Pr.340	1		Computer link operation
E2PROM write selection	Pr.342		0*3		Written to RAM and EEPROM

*1 Setting items are parameter names described in the manual of FREQROL-V500, V500L series and FR-A5NR.
*2 Settings on the GOT can be changed.
When changing the settings on the GOT, be sure to change the parameters on the inverter to correspond with the GOT settings.
*3 Inverter default values (No need to change)
*4 Since the value has been set as a default, no setting is required when the GOT is connected to the PU connector on the inverter side.
*5 There is no setting for this item on the inverter side.
*6 The setting is required on the inverter side when FR-A5NR is used.

25.5.6 Connecting to FREQROL-E700 or sensorless servo (FREQROL-E700EX) series

■ Communication settings

Make the communication settings of the inverter.
Be sure to perform the inverter reset after updating each parameter.

(1) Communication port and corresponding parameters

GOT connection destination	Parameters corresponding to inverter
PU connector	Pr.79, Pr.117 to Pr.124, Pr.340, Pr.342, Pr.549
FR-E7TR (RS-485 terminal block)	

(2) Communication settings of inverter

Set the following parameters using the PU (parameter unit).
Do not change these parameters, even though they can be monitored from the GOT. If they are changed, communication with the GOT is disabled

Setting item*1	Parameter No.	Set value	Settings
PU communication station number	Pr.117	0 to 31	25.5.13 Station number setting
PU communication speed*2	Pr.118	192*3	19200bps
PU communication stop bit length*2	Pr.119	10	Data length: 7bit Stop bit length: 1bit
PU communication parity check*2	Pr.120	1	Odd
Number of PU communication retries	Pr.121	9999	The inverter will not come to an alarm stop.
PU communication check time interval	Pr.122	9999	Communication check suspension
PU communication wait time setting	Pr.123	0	0ms
PU communication CR/LF selection	Pr.124	1*3	With CR, without LF
Protocol selection	Pr.549	0*3	Mitsubishi inverter protocol
Operation mode selection	Pr.79	0*3	External operation mode at power on
Link startup mode selection	Pr.340	1	Network operation mode
Communication EEPROM write selection	Pr.342	0*3	Written to RAM and EEPROM

*1 Setting items are parameter names described in the manual of FREQROL-E700 series.
*2 Settings on the GOT can be changed.
When changing the settings on the GOT, be sure to change the parameters on the inverter to correspond with the GOT settings.
*3 Inverter default values (No need to change)

25.5.7 Connecting to FREQROL-D700/F700PJ series

■ Communication settings

Make the communication settings of the inverter.
Be sure to perform the inverter reset after updating each parameter.

(1) Communication port and corresponding parameters

GOT connection destination	Parameters corresponding to inverter
PU connector	Pr.79, Pr.117 to Pr.124, Pr.340, Pr.342, Pr.549

(2) Communication settings of inverter

Set the following parameters using the PU (parameter unit). Set Pr.160 (User group read selection) to 0 "The simple mode and extended parameters can be displayed" before making the parameter settings.
Do not change these parameters, even though they can be monitored from the GOT. If they are changed, communication with the GOT is disabled

Setting item*1	Parameter No.	Set value	Settings
PU communication station number	Pr.117	0 to 31	25.5.13 Station number setting
PU communication speed*2	Pr.118	192*3	19200bps
PU communication stop bit length*2	Pr.119	10	Data length: 7bit Stop bit length: 1bit
PU communication parity check*2	Pr.120	1	Odd
Number of PU communication retries	Pr.121	9999	The inverter will not come to an alarm stop.
PU communication check time interval	Pr.122	9999	Communication check suspension
PU communication wait time setting	Pr.123	0	0ms
PU communication CR/LF selection	Pr.124	1*3	With CR, without LF
Protocol selection	Pr.549	0*3	Mitsubishi inverter protocol
Operation mode selection	Pr.79	0*3	External operation mode at power on
Communication startup mode selection	Pr.340	1	Network operation mode
Communication EEPROM write selection	Pr.342	0*3	Written to RAM and EEPROM

*1 Setting items are parameter names described in the manual of FREQROL-D700 series.
*2 Settings on the GOT can be changed.
When changing the settings on the GOT, be sure to change the parameters on the inverter to correspond with the GOT settings.
*3 Inverter default values (No need to change)

HINT

Automatic setting with Pr.999 (FREQROL-F700PJ series only)

If Pr.999 is set as the following, the communication settings other than [PU communication station number] and [Communication EEPROM write selection] can be automatically set in a batch to the default communication settings of the GOT side.

Parameter No.	Set value	Description	Operation in parameter setting mode
Pr.999*1	10	GOT initial settings (PU connector)	[AUTO] → [GOT] → [1] Write

*1 When the value of Pr.999 is monitored, 9999 is always monitored.

25.5.8 Connecting to FREQROL-F700/F700P

■ Communication settings

Make the communication settings of the inverter.
Be sure to perform the inverter reset after updating each parameter.

(1) Communication port and corresponding parameters

GOT connection destination	Parameters corresponding to inverter
PU connector	Pr.79, Pr.117 to Pr.124, Pr.340, Pr.342
RS-485 terminal	Pr.79, Pr.331 to Pr.337, Pr.340 to Pr.342, Pr.549

(2) Communication settings of inverter

Set the following parameters using the PU (parameter unit). Set Pr.160 (User group read selection) to 0 [The simple mode and extended parameters can be displayed] before making the parameter settings.
Do not change these parameters, even though they can be monitored from the GOT. If they are changed, communication with the GOT is disabled

Setting item*1	Parameter No.		Set value	Settings
	PU connector	RS-485 terminal		
PU communication station number / RS-485 communication station number	Pr.117	Pr.331	0 to 31	25.5.13 Station number setting
PU communication speed / RS-485 communication speed*2	Pr.118	Pr.332	192*4	19200bps
PU communication stop bit length*2 / RS-485 communication stop bit length*2	Pr.119	Pr.333	10	Data length: 7bit Stop bit length: 1bit
PU communication parity check / RS-485 communication parity check*2	Pr.120	Pr.334	1	Odd
Number of PU communication retries / Number of RS-485 communication retries	Pr.121	Pr.335	9999	The inverter will not come to an alarm stop.
PU communication check time interval / RS-485 communication check time interval	Pr.122	Pr.336	9999*4	Communication check suspension
PU communication wait time setting / RS-485 communication wait time setting	Pr.123	Pr.337	0	0ms
PU communication CR/LF selection / RS-485 communication CR/LF selection	Pr.124	Pr.341	1*3	With CR Without LF
Protocol selection	-	Pr.549	0*3	Mitsubishi inverter protocol

Setting item*1	Parameter No.		Set value		Settings
	PU connector	RS-485 terminal			
Operation mode selection	Pr.79		PU connector	1	PU operation mode
			RS-485	0*3	External operation mode at power on
Link startup mode selection	Pr.340		PU connector	0*3	Refer to Pr.79 settings.
			RS-485	1	Network operation mode
Communication EEPROM write selection	Pr.342		0*3		Written to RAM and EEPROM

*1 Setting items are parameter names described in the manual of FREQROL-F700 series.
*2 Settings on the GOT can be changed.
When changing the settings on the GOT, be sure to change the parameters on the inverter to correspond with the GOT settings.
*3 Inverter default values (No need to change)
*4 Since the value has been set as a default, no setting is required when the GOT is connected to the PU connector on the inverter side.

HINT

Automatic setting with Pr.999 (FREQROL-F700P series only)

If Pr.999 is set as the following, the communication settings other than [PU communication station number] and [Communication EEPROM write selection] can be automatically set in a batch to the default communication settings of the GOT side.

Parameter No.	Set value	Description	Operation in parameter setting mode
Pr.999*1	10	GOT initial settings (PU connector)	[AUTO] → [GOT] → [1] Write
	11	GOT initial settings (RS-485 terminal)	-

*1 When the value of Pr.999 is monitored, 9999 is always monitored.

25.5.9 Connecting to FREQROL-A700 series

■ Communication settings

Make the communication settings of the inverter.
Be sure to perform the inverter reset after updating each parameter.

(1) Communication port and corresponding parameters

GOT connection destination	Parameters corresponding to inverter
PU connector	Pr.79, Pr.117 to Pr.124, Pr.340, Pr.342
RS-485 terminal	Pr.79, Pr.331 to Pr.337, Pr.340 to Pr.342, Pr.549

(2) Communication settings of inverter
Set the following parameters using the PU (parameter unit).
Do not change these parameters, even though they can be monitored from the GOT. If they are changed, communication with the GOT is disabled

Setting item*1	Parameter No.		Set value	Settings
	PU connector	RS-485 terminal		
PU communication station number/RS-485 communication station number	Pr.117	Pr.331	0 to 31	25.5.13 Station number setting
PU communication speed/RS-485 communication speed*2	Pr.118	Pr.332	192*4	19200bps
PU communication stop bit length*2 / RS-485 communication stop bit length*2	Pr.119	Pr.333	10	Data length: 7bit Stop bit length: 1bit
PU communication parity check / RS-485 communication parity check*2	Pr.120	Pr.334	1	Odd
Number of PU communication retries / Number of RS-485 communication retries	Pr.121	Pr.335	9999	The inverter will not come to an alarm stop.
PU communication check time interval / RS-485 communication check time interval	Pr.122	Pr.336	9999*4	Communication check suspension
PU communication wait time setting / RS-485 communication wait time setting	Pr.123	Pr.337	0	0ms
PU communication CR/LF selection / RS-485 communication CR/LF selection	Pr.124	Pr.341	1*3	With CR, without LF
Protocol selection	-	Pr.549	0*3	Mitsubishi inverter protocol

Setting item*1	Parameter No.		Set value		Settings
	PU connector	RS-485 terminal			
Operation mode selection	Pr.79		PU Connector	1	PU operation mode
			RS-485	0*3	External operation mode at power on
Communication startup mode selection	Pr.340		PU Connector	0*3	Refer to Pr.79 settings.
			RS-485	1	Network operation mode
Communication EEPROM write selection	Pr.342		0*3		Written to RAM and EEPROM

*1 Setting items are parameter names described in the manual of FREQROL-A700 series.
*2 Settings on the GOT can be changed.
When changing the settings on the GOT, be sure to change the parameters on the inverter to correspond with the GOT settings.
*3 Inverter default values (No need to change)
*4 Since the value has been set as a default, no setting is required when the GOT is connected to the PU connector on the inverter side.

HINT

(1) Automatic setting with Pr.999
If Pr.999 is set as the following, the communication settings other than [PU communication station number] and [Communication EEPROM write selection] can be automatically set in a batch to the default communication settings of the GOT side.

Parameter No.	Set value	Description	Operation in parameter setting mode
Pr.999*1	10	GOT initial settings (PU connector)	[AUTO] → [GOT] → [1] Write
	11	GOT initial settings (RS-485 terminal)	-

*1 When the value of Pr.999 is monitored, 9999 is always monitored.

(2) Inverters available for automatic batch setting
Parameters are not automatically set in a batch depending on the SERIAL (production number) symbol of the inverter to be used. For details, contact your local distributor.

■ Communication settings

Make the communication settings of the inverter.
Be sure to perform the inverter reset after updating each parameter.
The GOT1000 series does not support the automatic connection of inverters.

(1) Communication port and corresponding parameters

GOT connection destination	Parameters corresponding to inverter
PU connector	Pr.79, Pr.117 to Pr.124, Pr.340, Pr.342
RS-485 terminal	Pr.79, Pr.331 to Pr.337, Pr.340 to Pr.342, Pr.549

(2) Communication settings of inverter

Set the following parameters using the PU (parameter unit).
Set Pr.160 (User group read selection) to 0 [The simple mode and extended parameters can be displayed] before making the parameter settings.
Do not change these parameters, even though they can be monitored from the GOT. If they are changed, communication with the GOT is disabled.

Setting item*1	Parameter No.		Set value		Contents of setting
	PU connector	RS-485 terminal			
PU communication station number/RS-485 communication station number	Pr.117	Pr.331	0 to 31		☞ 25.5.13 Station number setting
PU communication speed/RS-485 communication speed*2	Pr.118	Pr.332	192*3		19200bps
PU communication stop bit length/RS-485 communication stop bit length*2	Pr.119	Pr.333	10		Data length: 7bits Stop bit length: 1bit
PU communication parity check/RS-485 communication parity check*2	Pr.120	Pr.334	1		Odd
Number of PU communication retries/RS-485 communication retry count	Pr.121	Pr.335	9999		The inverter will not come to an alarm stop.
PU communication check time interval/RS-485 communication check time interval	Pr.122	Pr.336	9999*4		Communication check suspension
PU communication waiting time setting/RS-485 communication waiting time setting	Pr.123	Pr.337	0		0ms
PU communication CR/LF selection/RS-485 communication CR/LF selection	Pr.124	Pr.341	1*3		With CR, without LF
Protocol selection	-	Pr.549	0*3		Mitsubishi inverter protocol
Operation mode selection	Pr.79		PU connector	1	PU operation mode
			RS-485	0*3	External operation mode at power on
Communication startup mode selection	Pr.340		PU connector	0*3	Refer to Pr.79 settings.
			RS-485	1	Network operation mode.
Communication EEPROM write selection	Pr.342		0*3		Written to RAM and EEPROM

*1 Setting items are parameter names described in the manual of FREQROL-A800/F800 series.
*2 Settings on the GOT can be changed.
When changing the settings on the GOT, be sure to change the parameters on the inverter to correspond with the GOT settings.
*3 Inverter default values (No need to change).
*4 Since the value has been set as a default, no setting is required when connecting to the PU connector on the inverter side.

HINT

Automatic setting with Pr.999

If Pr.999 is set as the following, the communication settings other than [PU communication station number] and [Communication EEPROM write selection] can be automatically set in a batch to the default communication settings of the GOT side.

Parameter No.	Set value	Description	Operation in parameter setting mode
Pr.999*1	10	GOT Initial settings (PU connector)	[AUTO] → [GOT] → [1]Write
	11	GOT initial setting (RS-485 terminal)	-

*1 When monitoring the value of Pr.999, 9999 is always monitored.

25.5.11 Connecting sensorless servo (FREQROL-E700EX series)

■ Communication settings

Make the communication settings of the sensorless servo (FREQROL-E700EX series).
Be sure to perform the inverter reset after updating each parameter.

(1) Communication port and corresponding parameters

GOT connection destination	Parameters corresponding to inverter
PU connector	Pr.79, Pr.117 to Pr.124, Pr.340, Pr.342, Pr.549
FR-E7TR (RS-485 terminal block)	

(2) Communication settings of inverter

Set the following parameters using the PU (parameter unit).
Do not change these parameters, even though they can be monitored from the GOT. If they are changed, communication with the GOT is disabled.

Setting item*1	Parameter No.	Set value	Contents of setting
PU communication station number	Pr.117	0 to 31	25.5.13 Station number setting
PU communication speed*2	Pr.118	192*3	19200bps
PU communication stop bit length*2	Pr.119	10	Data length: 7bit Stop bit length: 1bit
PU communication parity check*2	Pr.120	1	Odd
Number of PU communication retries	Pr.121	9999	The inverter will not come to an alarm stop.
PU communication check time interval	Pr.122	9999	Communication check suspension
PU communication wait time setting	Pr.123	0	0ms
PU communication CR/LF selection	Pr.124	1*3	With CR, without LF
Protocol selection	Pr.549	0*3	Mitsubishi inverter protocol
Operation mode selection	Pr.79	0*3	PU operation mode
Communication startup mode selection	Pr.340	1	Network operation mode.
Communication EEPROM write selection	Pr.342	0*3	Written to RAM and EEPROM

*1 Setting items are parameter names described in the manual of sensorless servo (FREQROL-E700EX series).
*2 Settings on the GOT can be changed.
When changing the settings on the GOT, be sure to change the parameters on the inverter to correspond with the GOT settings.
*3 Sensorless servo (FREQROL-E700EX series) default values (No need to change)

25.5.12 Connecting to MD-CX522-□□K(-A0)

■ Communication settings

Make the communication settings of the inverter.
Be sure to perform the inverter reset after updating each parameter.

(1) Communication port and corresponding parameters

GOT connection destination	Parameters corresponding to inverter
PU connector	Pr.79, Pr.117 to Pr.124

(2) Communication settings of inverter

- Set the following parameters using the PU (parameter unit).
- After setting the parameters for the communication settings, reset the inverter.
- Do not change these parameters, even though they can be monitored from the GOT. If they are changed, communication with the GOT is disabled

Setting item*1	Parameter No.	Set value	Settings
Station No.	Pr.117	0 to 31	25.5.13Station number setting
Communication speed*2	Pr.118	192*3	19200bps
Stop bit length/data length*2	Pr.119	10	Data length: 7bit Stop bit length: 1bit
Parity check presence/absence*2	Pr.120	1	Odd
Number of communication retries	Pr.121	9999	The inverter will not come to an alarm stop.
Communication check time interval	Pr.122	9999	Communication check suspension
Wait time setting	Pr.123	0	0ms
CR/LF presence/ absence selection	Pr.124	1*3	With CR, without LF

*1 Setting items are parameter names described in the manual of MELIPM series.
*2 Settings on the GOT can be changed.
When changing the settings on the GOT, be sure to change the parameters on the inverter to correspond with the GOT settings.
*3 Inverter default values (No need to change)

25.5.13 Station number setting

Set each station number so that no station number overlaps.

The station number can be set without regard to the cable connection order. There is no problem even if station numbers are not consecutive.

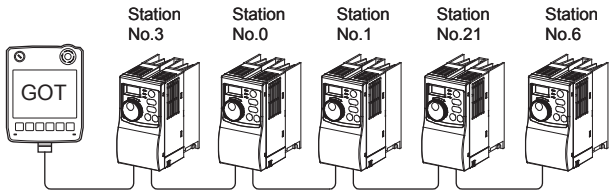

Examples of station number setting

(1) Direct specification

When setting the device, specify the station number of the inverter of which data is to be changed.

Specification range
0 to 31

(2) Indirect specification

When setting the device, indirectly specify the station number of the inverter of which data is to be changed using the 16-bit GOT internal data register (GD10 to GD25).
When specifying the station No. from 100 to 155 on GT Designer3, the value of GD10 to GD25 compatible to the station No. specification will be the station No. of the inverter.

Specification station No.	Compatible device	Setting range
100	GD10	0 to 31 For the setting other than the above, an error (dedicated device is out of range) will occur.
101	GD11	
102	GD12	
103	GD13	
104	GD14	
105	GD15	
106	GD16	
107	GD17	
108	GD18	
109	GD19	
110	GD20	
111	GD21	
112	GD22	
113	GD23	
114	GD24	
115	GD25	

25.6 Device Range that Can Be Set

For details on the device range of controllers that can be used on GT14 Handy, refer to the following manuals.

☞ GT Designer3 Version1 Screen Design Manual (Fundamentals)

☞ GOT1000 Series Connection Manual (Mitsubishi Products) for GT Works3

25.7 Precautions

■ Station No. of inverter system

Make sure to establish inverter system with No.0 station.

■ Number of inverters

Up to 10 inverters can be connected.

■ Parameter setting

(1) Communication parameter change
Do not make any change for each communication parameter of the inverter side from GOT.
If changed, communication with the inverter will no longer be possible.

(2) When setting "8888" or "9999" to inverter parameter (Pr)
"8888" and "9999" designate special functions. When specifying the values from the GOT1000, it will be as follows.

Set value of inverter side	Value specified by GOT
8888	65520
9999	65535

■ Screen switching devices, and system information devices

Make sure to use GD for screen switching devices and system information devices when the GOT is connected to only the inverter.

■ GOT clock control

Since the inverter does not have a clock function, the settings of [time adjusting] or [time broad cast] by GOT clock control will be disabled.

26. SERVO AMPLIFIER CONNECTION

26.1 Connectable Model List

The following table shows the connectable models.

Series	Model	Clock	Communication type	GT14 Handy	Refer to
MELSERVO-J2-Super	MR-J2S-□A	×	RS-232 RS-422	○	26.2.1
	MR-J2S-□CP				
	MR-J2S-□CL				
MELSERVO-J2M	MR-J2M-P8A	×	RS-232 RS-422	○	26.2.1
	MR-J2M-□DU				
MELSERVO-J3	MR-J3-□A	×	RS-232 RS-422	○	26.2.2
	MR-J3-□T				
MELSERVO-J4*1	MR-J4-□A MR-J4-□A-RJ	×	RS-232 RS-422	○	
MELSERVO-JE	MR-JE-□A	×	RS-422	○	26.2.3

*1 For the RS-422 communication, use MELSERVO-J4 of software version A3 or a later version.

26.2 System Configuration

26.2.1 Connecting to the MELSERVO-J2-Super or MELSERVO-J2M Series

■ When connecting via the RS-232 communication

Communication driver

MELSERVO-J4, J3, J2S/M, JE

(1) When using the connector conversion box

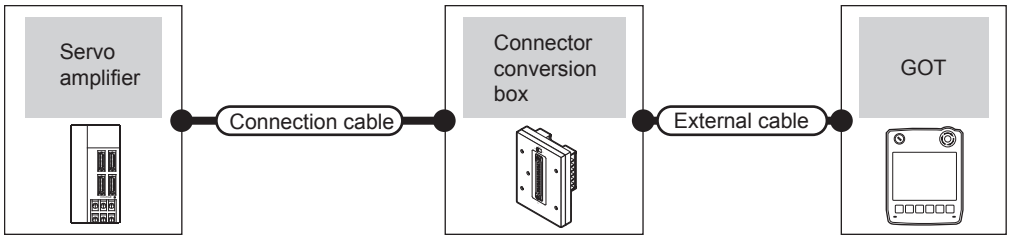

Servo amplifier		Connection cable	Connector conversion box	External cable	GOT model	Total distance	Number of connectable equipment
Series name	Communication type	Cable model Connection diagram number					
MELSERVO-J2-Super*1	RS-232	MR-CPCATCBL3M (3m) or User preparing RS232 connection diagram 1)	GT11H-CNB-37S	GT11H-C30-37P (3m)	GT14 Handy	6m	1 GOT for 1 servo amplifier
MELSERVO-J2M*1							

*1 Connect the connector of the servo amplifier to CN3.

(2) When using the external cable (GT11H-C□□□-37P)

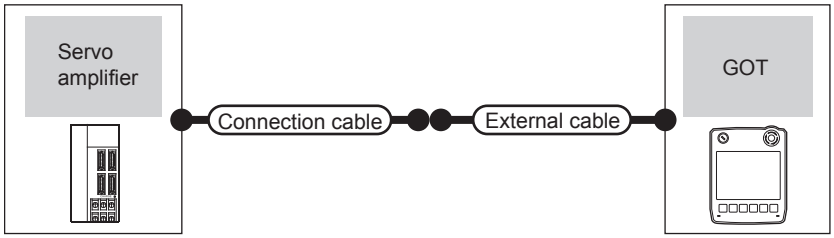

Servo amplifier		Connection cable	External cable	GOT model	Total distance	Number of connectable equipment
Series name	Communication type	Cable model Connection diagram number				
MELSERVO-J2-Super*1	RS-232	User preparing RS232 connection diagram 2)	GT11H-C30-37P (3m)	GT14 Handy	6m	1 GOT for 1 servo amplifier
MELSERVO-J2M*1						

*1 Connect the connector of the servo amplifier to CN3.

(3) When using the external cable (GT11H-C□□□)

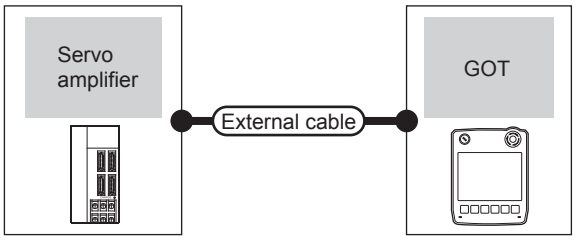

Servo amplifier		External cable	GOT model	Total distance	Number of connectable equipment
Series name	Communication type				
MELSERVO-J2-Super*1	RS-232	GT11H-C30 (3m) GT11H-C60 (6m) User preparing RS232 connection diagram 3)	GT14 Handy	6m	1 GOT for 1 servo amplifier
MELSERVO-J2M*1					

*1 Connect the connector of the servo amplifier to CN3.

■ When connecting via the RS-422 communication

Communication driver

MELSERVO-J4, J3, J2S/M, JE

(1) When using the connector conversion box

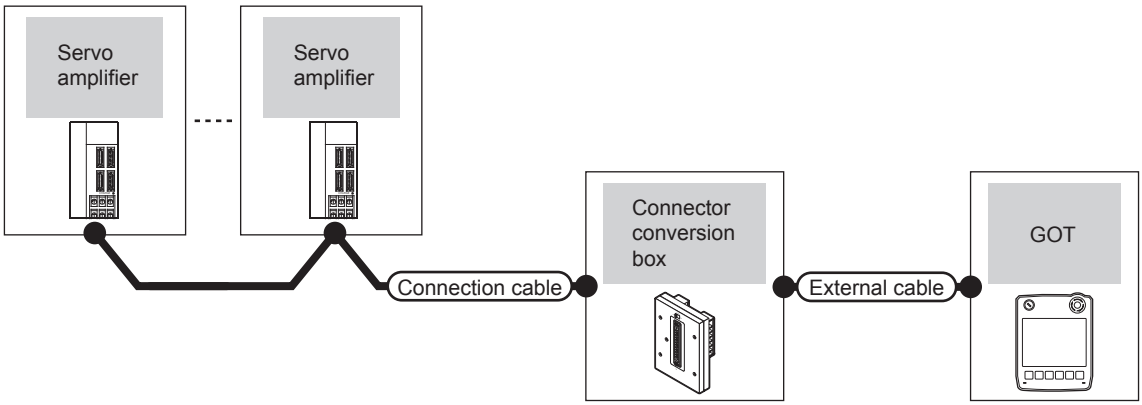

Servo amplifier		Connection cable	Connector conversion box	External cable	GOT model	Total distance	Number of connectable equipment
Series name	Communication type	Connection diagram number					
MELSERVO-J2-Super*1	RS-422	User preparing RS422 connection diagram 5)	GT11H-CNB-37S	GT11H-C30-37P (3m) GT11H-C60-37P (6m) GT11H-C100-37P (10m)	GT14 Handy	13m	Up to 32 axes for 1 GOT (Multi-drop communication)
MELSERVO-J2M*1	RS-422	User preparing RS422 connection diagram 5)			GT14 Handy	13m	0 to 31 stations for 1 GOT

*1 Connect the connector of the servo amplifier to CN3.

(2) When using the external cable (GT11H-C□□□-37P)

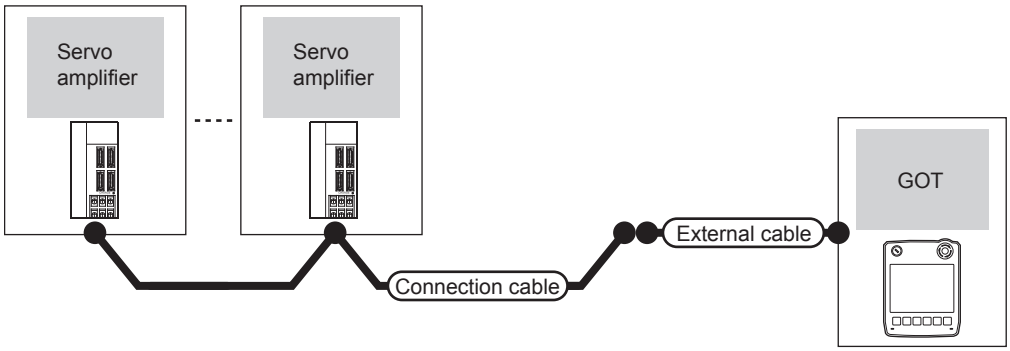

Servo amplifier		Connection cable	External cable	GOT model	Total distance	Number of connectable equipment
Series name	Communication type	Connection diagram number				
MELSERVO-J2-Super*1	RS-422	User preparing RS422 connection diagram 6)	GT11H-C30-37P (3m) GT11H-C60-37P (6m) GT11H-C100-37P (10m)	GT14 Handy	13m	Up to 32 axes for 1 GOT (Multi-drop communication)
MELSERVO-J2M*1	RS-422	User preparing RS422 connection diagram 6)	GT11H-C30-37P (3m) GT11H-C60-37P (6m) GT11H-C100-37P (10m)	GT14 Handy	13m	0 to 31 stations for 1 GOT

*1 Connect the connector of the servo amplifier to CN3.

(3) When using the external cable (GT11H-C□□□)

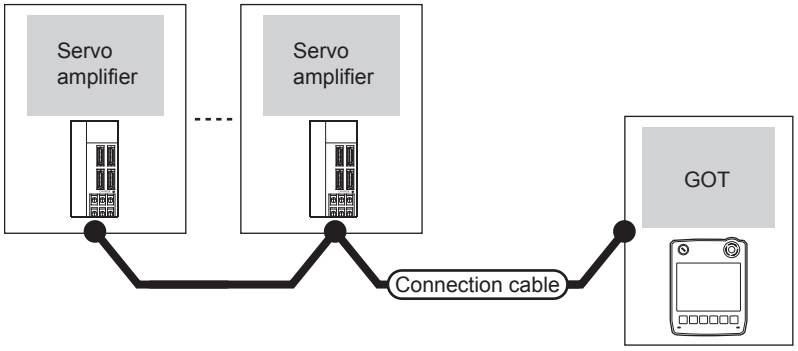

Servo amplifier		External cable	GOT model	Total distance	Number of connectable equipment
Series name	Communication type				
MELSERVO-J2-Super*1	RS-422	GT11H-C30 (3m) GT11H-C60 (6m) GT11H-C100 (10m) User preparing RS422 connection diagram 7)	GT14 Handy	13m	Up to 32 axes for 1 GOT (Multi-drop communication)
MELSERVO-J2M*1	RS-422	GT11H-C30 (3m) GT11H-C60 (6m) GT11H-C100 (10m) User preparing RS422 connection diagram 7)	GT14 Handy	13m	0 to 31 stations for 1 GOT

*1 Connect the connector of the servo amplifier to CN3.

26.2.2 Connecting to MELSERVO-J4 or J3 series

■ When connecting to one servo amplifier

Communication driver

MELSERVO-J4, J3, J2S/M, JE

(1) When using the connector conversion box

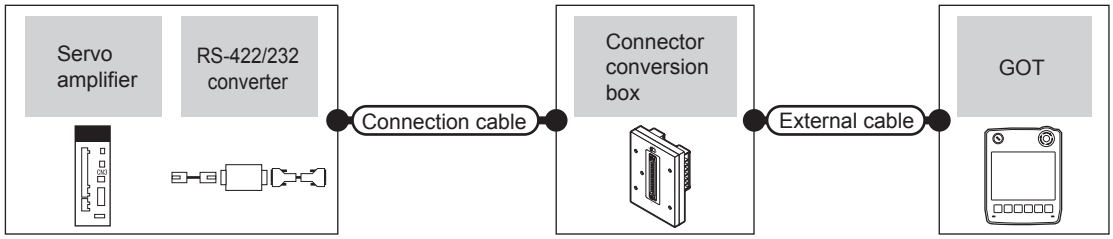

Servo amplifier			Connection cable	Connector conversion box	External cable	GOT model	Total distance *4	Number of connectable equipment
Series name	RS-422/232 interface converter RS-422/232 conversion cable	Communication type	Cable model Connection diagram number					
MELSERVO-J4*1, J3*1	DSV-CABV (1.5m)*2 or FA-T-RS40VS*3	RS-232	-	GT11H-CNB-37S	GT11H-C30-37P (3m)	GT14 Handy	6m	1 GOT for 1 servo amplifier
	-	RS-422	RS422 connection diagram 1) User preparing	GT11H-CNB-37S	GT11H-C30-37P (3m) GT11H-C60-37P (6m) GT11H-C100-37P (10m)	GT14 Handy	13m	

*1 Connect the connector of the servo amplifier to CN3.
*2 DSV-CABV is a product manufactured by Diatrend Corporation. For details, contact Diatrend Corporation.
*3 FA-T-RS40VS is a product manufactured by MITSUBISHI ELECTRIC ENGINEERING COMPANY LIMITED. For details, contact MITSUBISHI ELECTRIC ENGINEERING COMPANY LIMITED.
The cables (RS-PCATCBL-0.5M (0.5m), RS-422SCBL-2M (2m)) are packed together. Use the provided cables to connect devices.
*4 The distance from the GOT to the interface converter or the conversion cable (Connection cable + External connection cable)

(2) When using the external cable (GT11H-C□□□-37P)

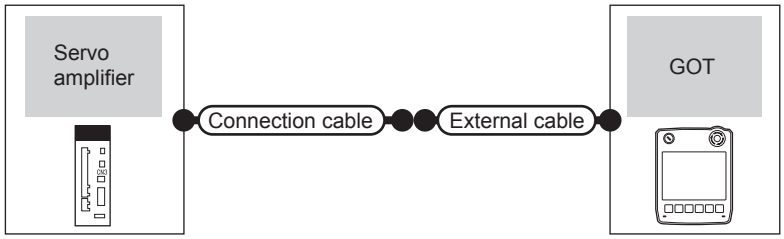

Servo amplifier		Connection cable	External cable	GOT model	Total distance *2	Number of connectable equipment
Series name	Communication type	Cable model Connection diagram number				
MELSERVO-J4*1, J3*1	RS-422	RS422 connection diagram 2) User preparing	GT11H-C30-37P (3m) GT11H-C60-37P (6m) GT11H-C100-37P (10m)	GT14 Handy	13m	1 GOT for 1 servo amplifier

*1 Connect the connector of the servo amplifier to CN3.
*2 The distance from the GOT to the interface converter or the conversion cable (Connection cable + External connection cable)

■ When connecting to multiple servo amplifiers (RS-422 connection)

Communication driver

MELSERVO-J4, J3, J2S/M, JE

(1) When using the connector conversion box

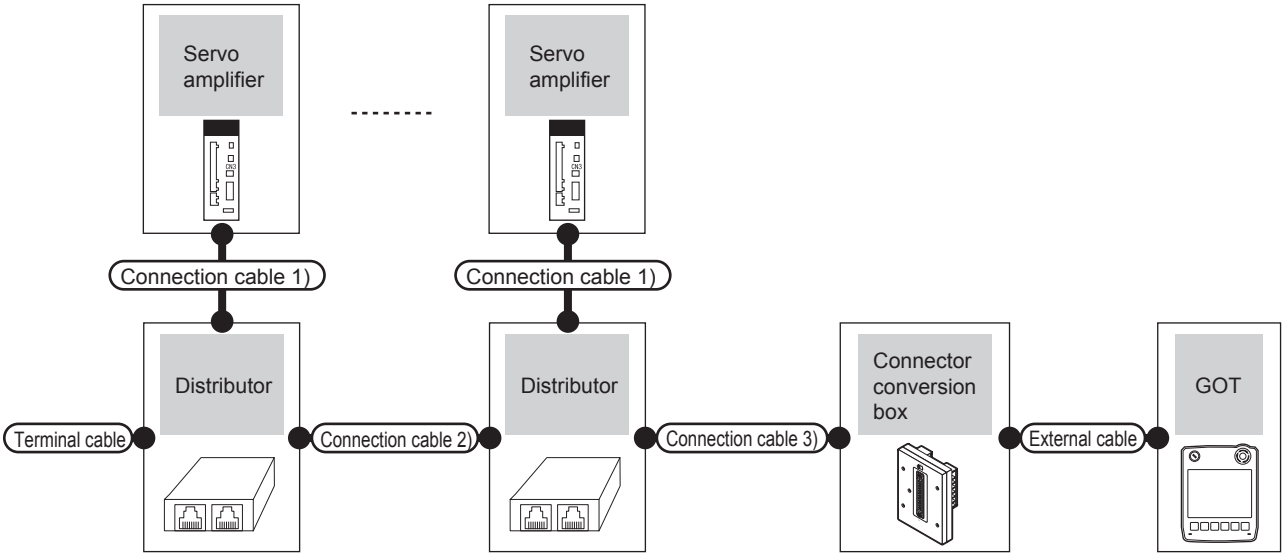

Servo amplifier		Terminal cable	Connection cable 1)	Distributor *2	Connection cable 2)	Distributor *2	Connection cable 3)	Connector conversion box	External cable	GOT model	Total distance *3	Number of connectable equipment
Series name	Communication type	Connection diagram number	Connection diagram number	Model	Connection diagram number	Model	Connection diagram number					
MELSERVO-J4*1, J3*1	RS-422	RS422 connection diagram 8) User preparing	RS422 connection diagram 4) User preparing	BMJ-8 (Recommended)	RS422 connection diagram 3) User preparing	BMJ-8 (Recommended)	RS422 connection diagram 1) User preparing	GT11H-CNB-37S	GT11H-C30-37P (3m) GT11H-C60-37P (6m) GT11H-C100-37P (10m)	GT14 Handy	13m	Up to 32 axes for 1 GOT

*1 Connect the connector of the servo amplifier to CN3.

*2 The distributor is a product manufactured by HACHIKO ELECTRIC CO., LTD. For details, contact HACHIKO ELECTRIC CO., LTD.

*3 The distance from the GOT to the servo amplifier (Connection cable 1) + Connection cable 2) + Connection cable 3) + External connection cable)

(2) When using the external cable (GT11H-C□□□-37P)

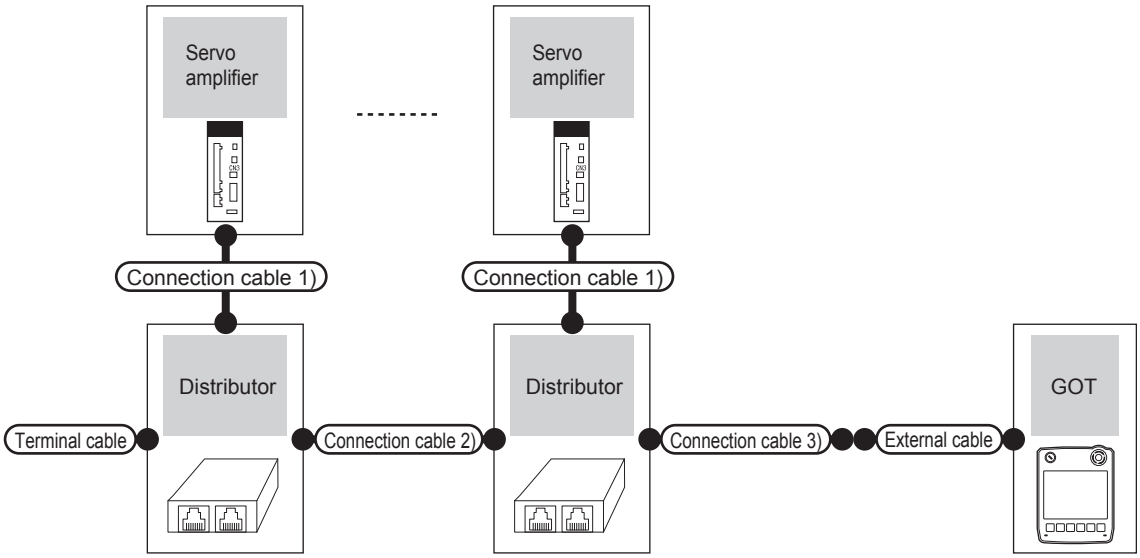

Servo amplifier		Terminal cable	Connection cable 1)	Distributor *2	Connection cable 2)	Distributor *2	Connection cable 3)	External cable	GOT model	Total distance *3	Number of connectable equipment
Series name	Commu-nication type	Connection diagram number	Connection diagram number	Model	Connection diagram number	Model	Connection diagram number				
MELSERVO-J4*1, J3*1	RS-422	RS422 connection diagram 8) User preparing	RS422 connection diagram 4) User preparing	BMJ-8 (Recommended)	RS422 connection diagram 3) User preparing	BMJ-8 (Recommended)	RS422 connection diagram 2) User preparing	GT11H-C30-37P (3m) GT11H-C60-37P (6m) GT11H-C100-37P (10m)	GT14 Handy	13m	Up to 32 axes for 1 GOT

*1 Connect the connector of the servo amplifier to CN3.

*2 The distributor is a product manufactured by HACHIKO ELECTRIC CO., LTD. For details, contact HACHIKO ELECTRIC CO., LTD.

*3 The distance from the GOT to the servo amplifier (Connection cable 1) + Connection cable 2) + Connection cable 3) + External connection cable)

■ When connecting to multiple servo amplifiers (RS-232 connection)

Communication driver

MELSERVO-J4, J3, J2S/M, JE

(1) When using the connector conversion box

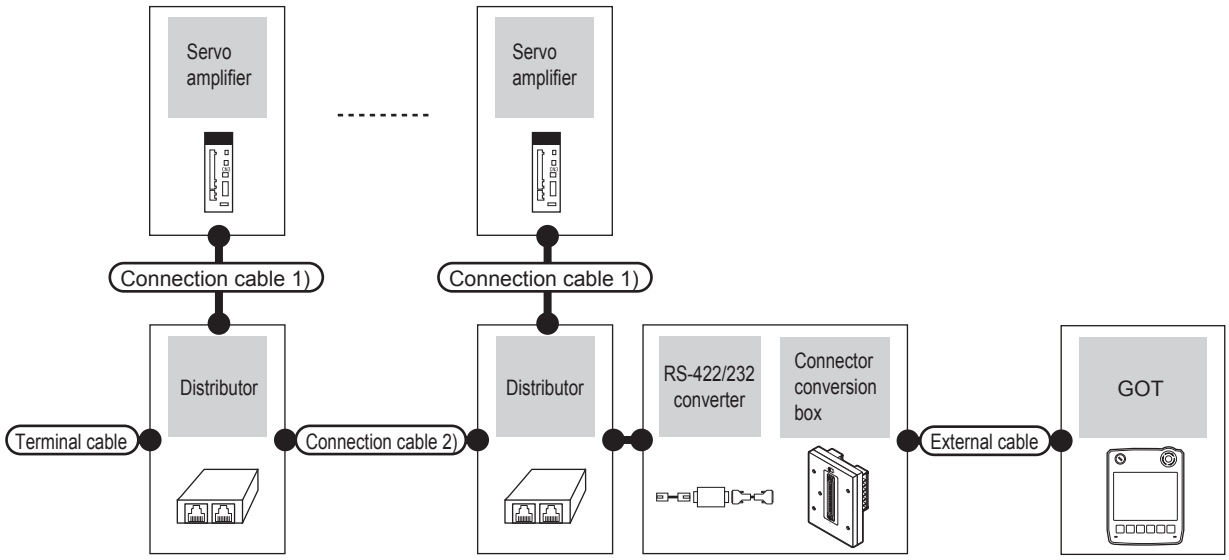

Servo amplifier	Terminal cable	Connection cable 1)	Distributor *3	Connection cable 2)	Distributor *3	RS-422/232 interface converter*2		Connector conversion box	External cable	GOT model	Total distance *4	Number of connectable equipment
Series name	Connection diagram number	Connection diagram number	Model	Connection diagram number	Model	Model	Commu-nication type					
MELSERVO-J4*1, J3*1	RS422 connection diagram 8) User preparing	RS422 connection diagram 4) User preparing	BMJ-8 (Recommended)	RS422 connection diagram 3) User preparing	BMJ-8 (Recommended)	FA-T-RS40VS	RS-232	GT11H-CNB-37S	GT11H-C30-37P (3m) GT11H-C60-37P (6m)	GT14 Handy	6m	Up to 32 axes for 1 GOT

*1 Connect the connector of the servo amplifier to CN3.

*2 FA-T-RS40VS is a product manufactured by MITSUBISHI ELECTRIC ENGINEERING COMPANY LIMITED. For details of the product, contact MITSUBISHI ELECTRIC ENGINEERING COMPANY LIMITED.
The cables (RS-PCATCBL-0.5M (0.5m), RS-422SCBL-2M (2m)) are packed together.
Use the provided cables to connect devices.

*3 The distributor is a product manufactured by HACHIKO ELECTRIC CO., LTD. For details, contact HACHIKO ELECTRIC CO., LTD.

*4 The distance from the GOT to the RS422/232 interface converter

26.2.3 Connecting to the MELSERVO-JE Super Series

■ When connecting via the RS-422 communication

Communication driver

MELSERVO-J4, J3, J2S/M, JE

(1) When using the connector conversion box

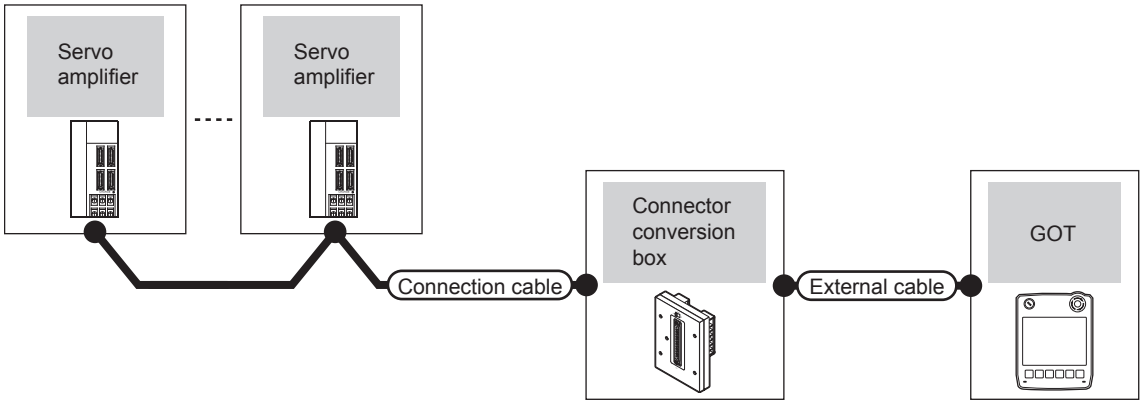

Servo amplifier		Connection cable	Connector conversion box	External cable	GOT model	Total distance	Number of connectable equipment
Series name	Communication type	Connection diagram number					
MELSERVO-JE*1	RS-422	User preparing RS422 connection diagram 9)	GT11H-CNB-37S	GT11H-C30-37P (3m) GT11H-C60-37P (6m) GT11H-C100-37P (10m)	GT14 Handy	13m	Up to 32 axes for 1 GOT (Multi-drop communication)

*1 Connect the connector of the servo amplifier to CN1.

(2) When using the external cable (GT11H-C□□□-37P)

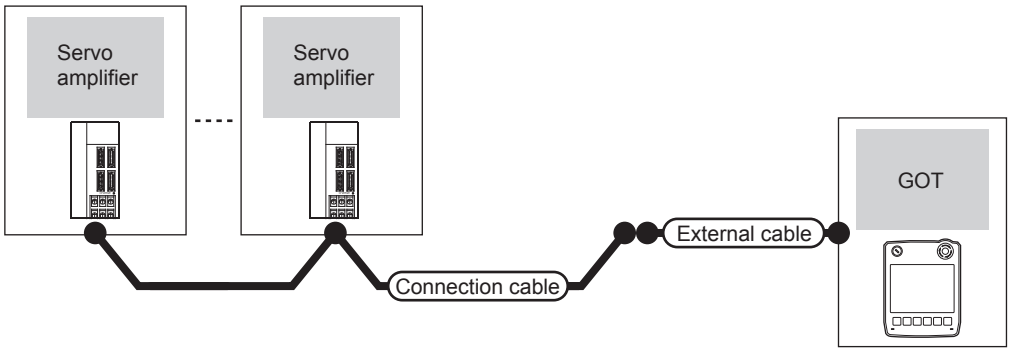

Servo amplifier		Connection cable	External cable	GOT model	Total distance	Number of connectable equipment
Series name	Communication type	Connection diagram number				
MELSERVO-JE*1	RS-422	User preparing RS422 connection diagram 10)	GT11H-C30-37P (3m) GT11H-C60-37P (6m) GT11H-C100-37P (10m)	GT14 Handy	13m	Up to 32 axes for 1 GOT (Multi-drop communication)

*1 Connect the connector of the servo amplifier to CN1.

(3) When using the external cable (GT11H-C□□□)

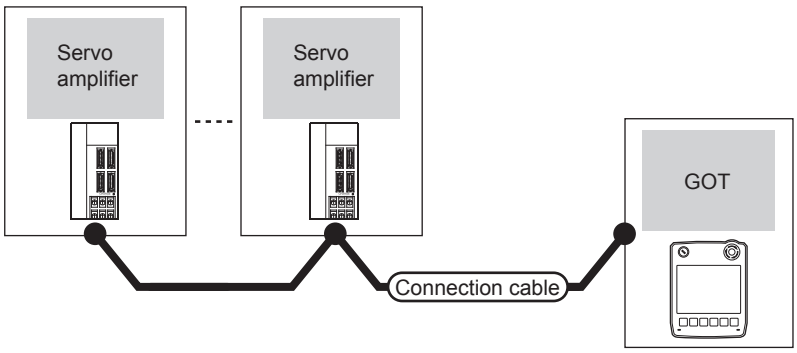

Servo amplifier		External cable	GOT model	Total distance	Number of connectable equipment
Series name	Communication type				
MELSERVO-JE*1	RS-422	GT11H-C30 (3m) GT11H-C60 (6m) GT11H-C100 (10m) User preparing RS422 connection diagram 11)	GT14 Handy	13m	Up to 32 axes for 1 GOT (Multi-drop communication)

*1 Connect the connector of the servo amplifier to CN1.

26.3 Connection Diagram

The following diagram shows the connection between the GOT and the servo amplifier.

26.3.1 RS-232 cable

■ Connection Diagram

RS232 connection diagram 1)

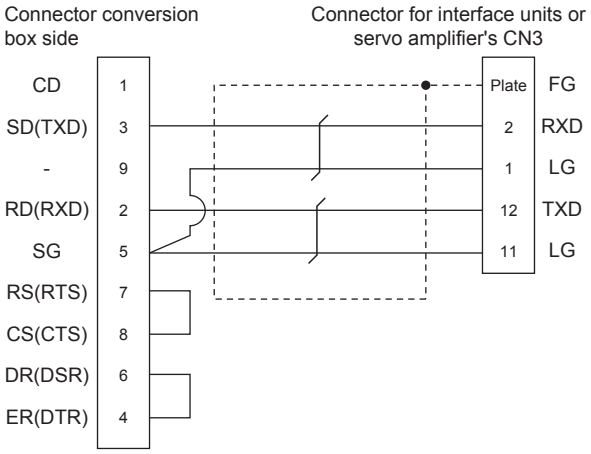

RS232 connection diagram 2)

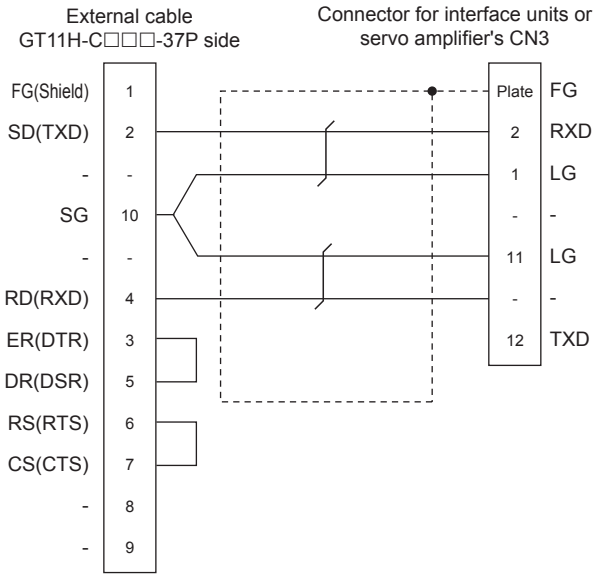

RS232 connection diagram 3)

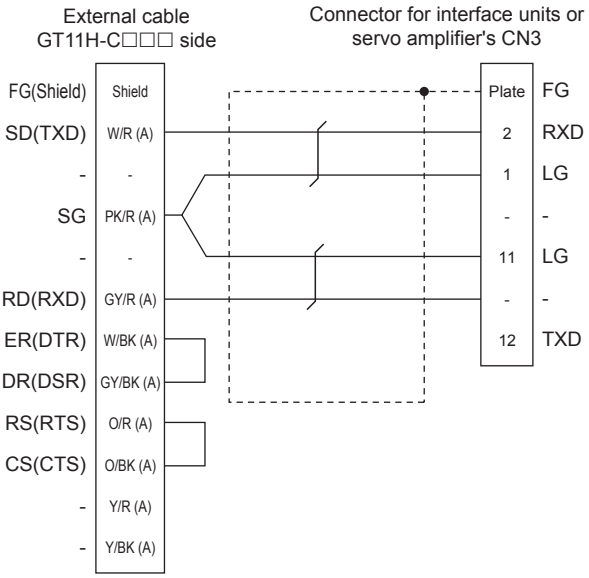

■ Precautions when preparing a cable

(1) Cable length
The total distance (between GOT and controllers) of RS-232 cable must be 6m or less.

(2) Connector conversion box side connector
For the connector conversion box side connector, refer to the following.

☞ 6.6 Connector Conversion Box

(3) External cable side connector
For the connector specifications of the external cable side, refer to the following.

☞ 8.2 External Cable, Relay Cable

26.3.2 RS-422 cable

■ Connection diagram

RS422 connection diagram 1)

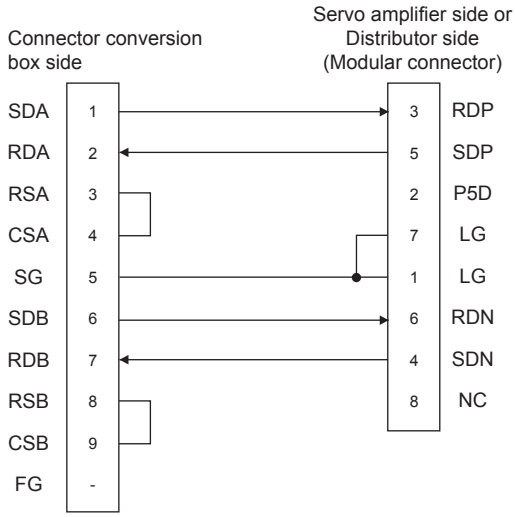

RS422 connection diagram 2)

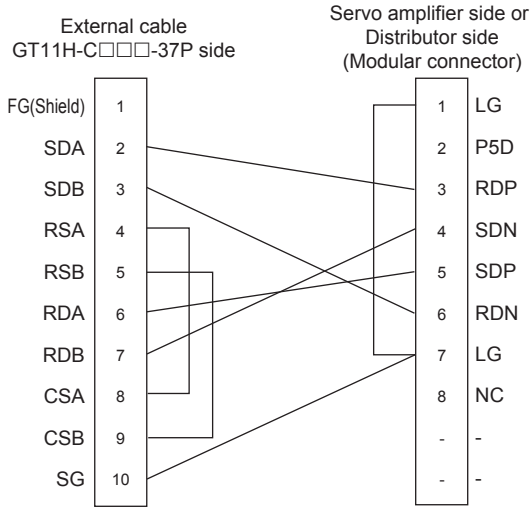

RS422 connection diagram 3)

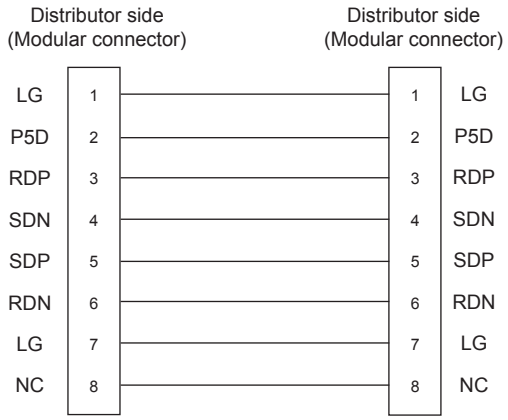

RS422 connection diagram 4)

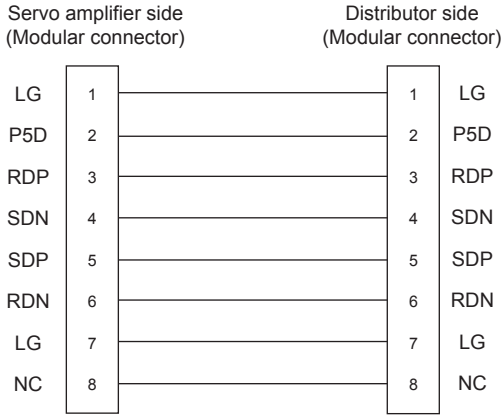

*1 Make the wiring between the distributor and servo amplifier as short as possible.

RS422 connection diagram 5)

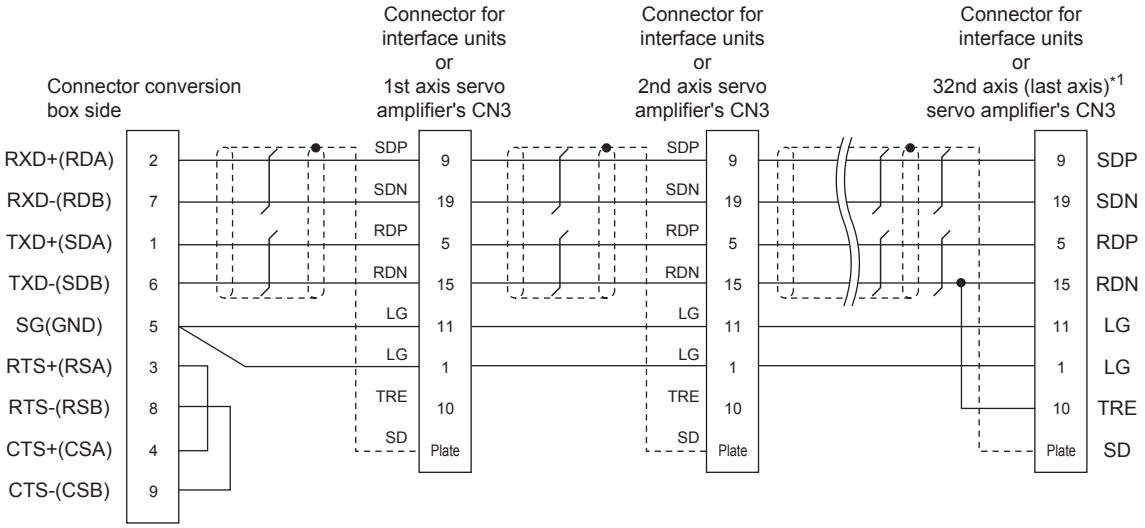

*1 At the last axis, connect TRE to RDN.

RS422 connection diagram 6)

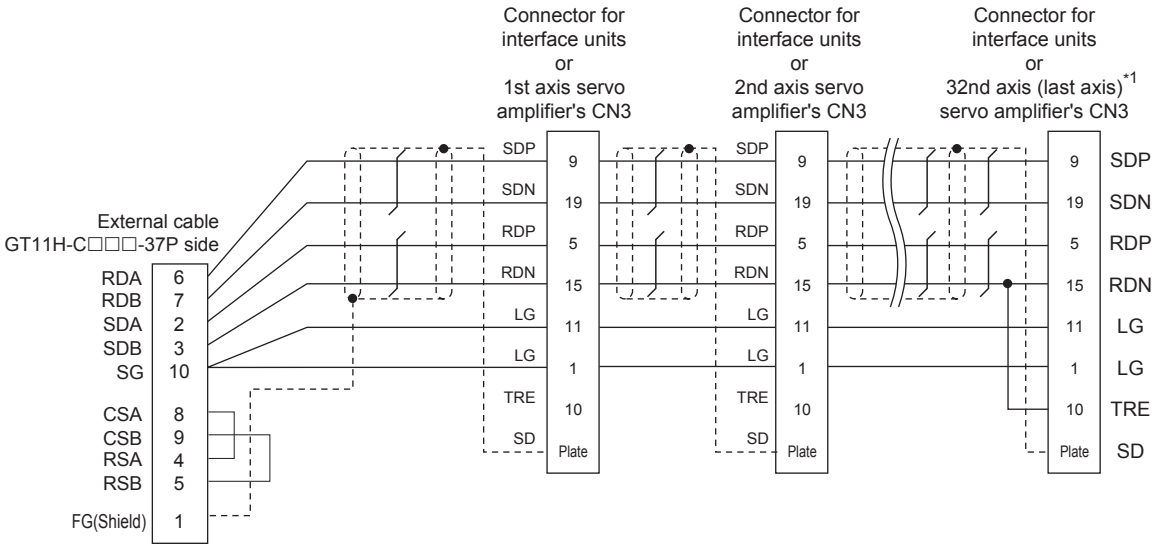

RS422 connection diagram 7)

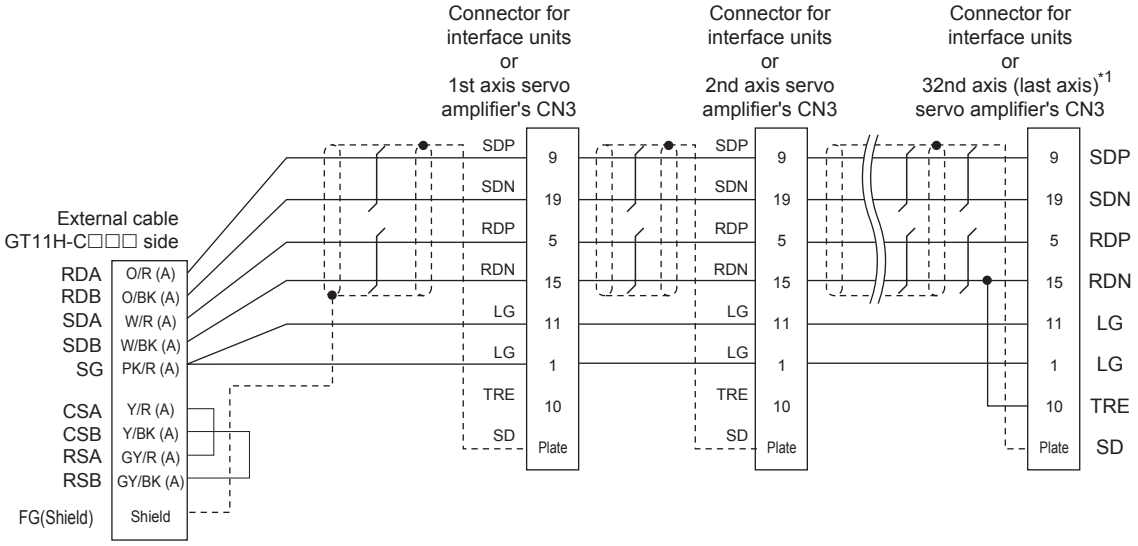

RS422 connection diagram 8)

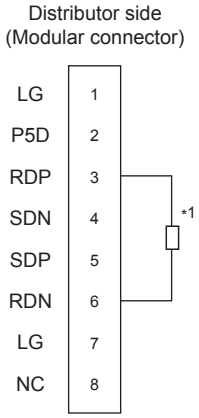

*1 Perform terminal processing on the part between RDP (3-pin) and RDN (6-pin) with a 150Ω resistor.

RS422 connection diagram 9)

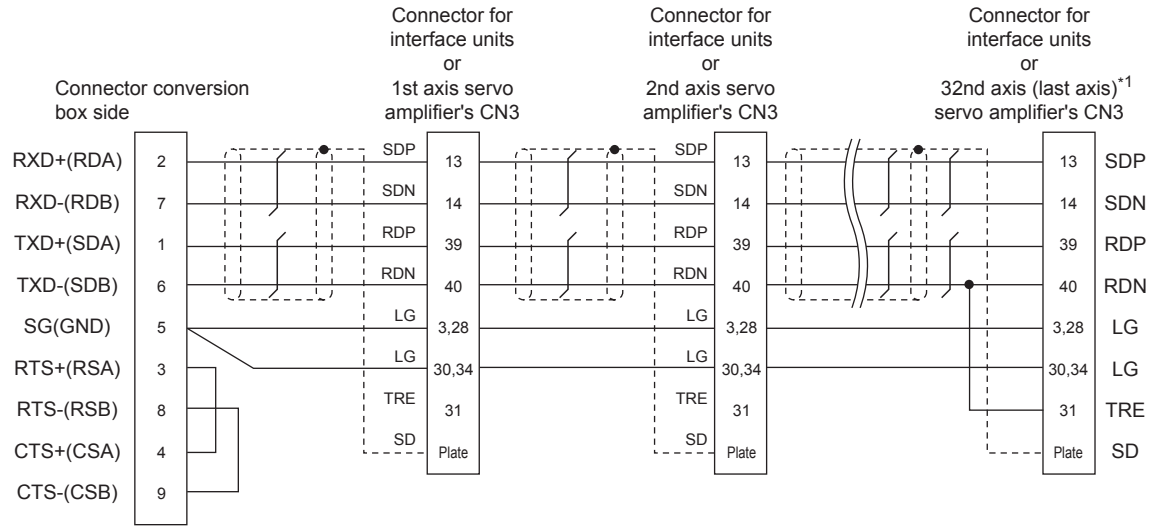

*1 At the last axis, connect TRE to RDN.

RS422 connection diagram 10)

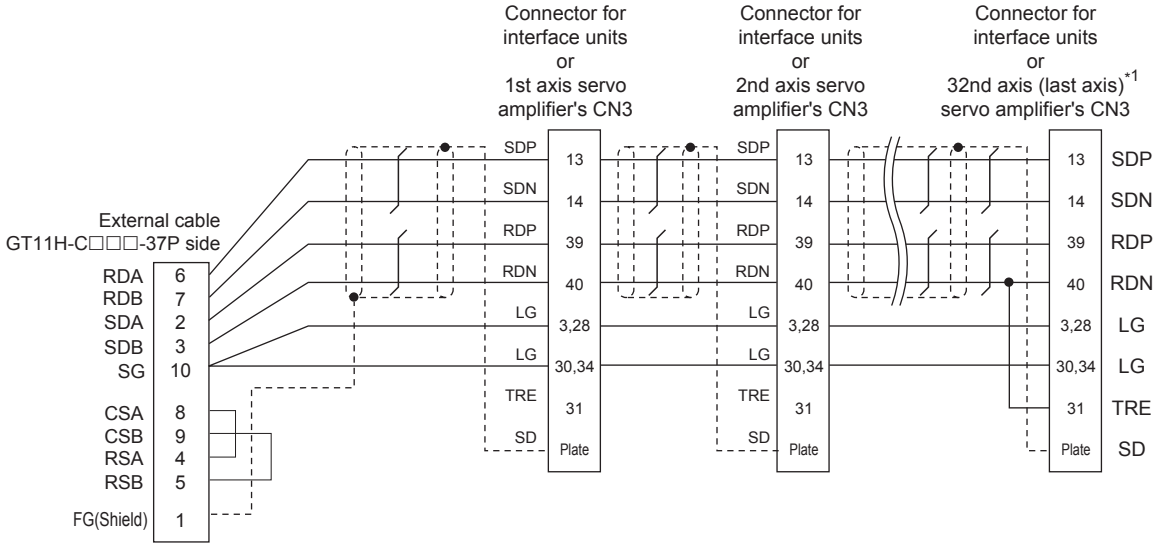

*1 At the last axis, connect TRE to RDN.

RS422 connection diagram 11)

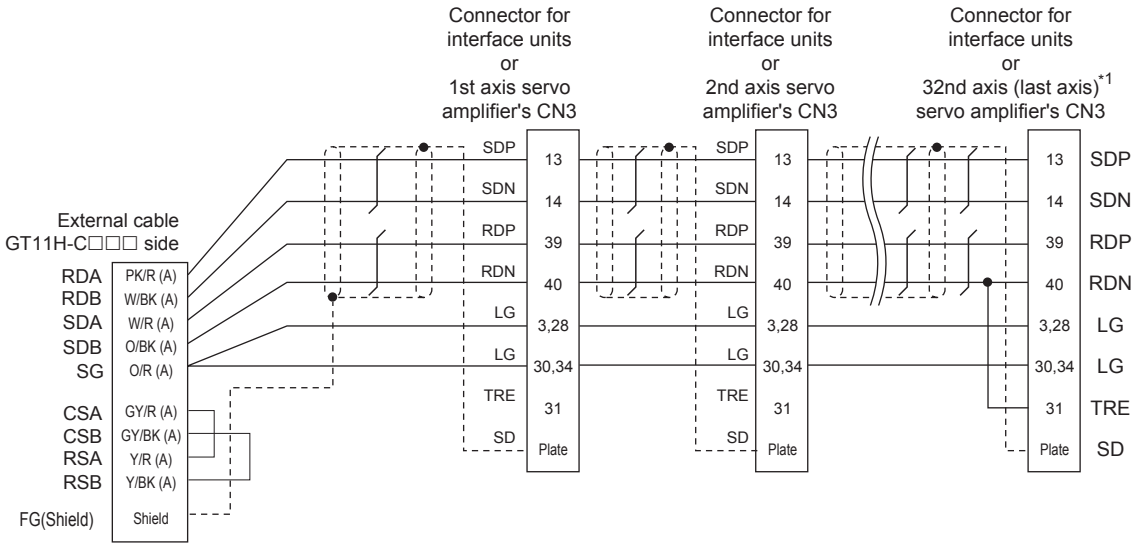

*1 At the last axis, connect TRE to RDN.

■ Precautions when preparing a cable

(1) Cable length
The total distance (between GOT and controllers) of RS-422 cable must be 13m or less.

(2) Connector conversion box side connector
For the connector conversion box side connector, refer to the following.

☞ 6.6 Connector Conversion Box

(3) External cable side connector
For the connector specifications of the external cable side, refer to the following.

☞ 8.2 External Cable, Relay Cable

(4) Servo amplifier connector
Use the connector compatible with the servo amplifier. For details, refer to the following.

☞ The instruction manual of the servo amplifier to be used

(a) Modular connector of the servo amplifier
• Pin layout in the Modular connector

When seen from the front of the servo amplifier (receptacle side)

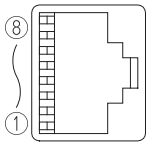

Modular jack

Pin No.	Signal name	Remark
1	LG	
2	P5D	
3	RDP	
4	SDN	
5	SDP	
6	RDN	
7	LG	
8	NC	

• Connector of the servo amplifier connection cable side
Use the commercial connectors and cables shown in the table below or the comparable products.
(Refer to the manual of the servo amplifier to be used.)

Name	Model	Specifications	Manufacturer
Connector	TM10P-88P (Plug)	RJ45 connector	HIROSE ELECTRIC CO., LTD.
Modular ceiling rosette (Distributor)	BMJ-8	-	HACHIKO ELECTRIC CO.,LTD. TEL(03)-5614-7585
Cable	-	Cable conforming to EIA568 (such as cable 10BASE-T)	-

26.4 GOT Side Settings

26.4.1 Setting communication interface (Communication settings)

Set the channel of the connected equipment.

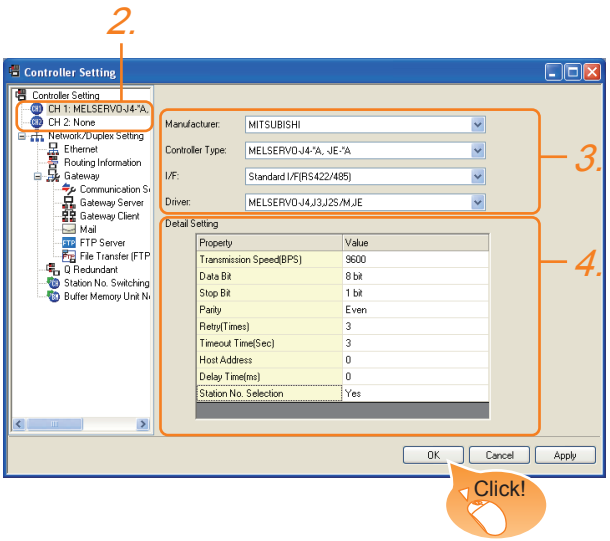

1. Select [Common] → [Controller Setting] from the menu.

2. The Controller Setting window is displayed. Select the channel to be used from the list menu.

3. Set the following items.
   - Manufacturer: Mitsubishi
   - Controller Type: Set according to the Controller Type to be connected.
   - I/F: Interface to be used
   - Driver: MELSERVO-J4, J3, J2S/M, JE

4. The detailed setting is displayed after Manufacturer, Controller Type, I/F, and Driver are set.
   Make the settings according to the usage environment.
   ☞ 26.4.2 Communication detail settings

Click the [OK] button when settings are completed.

POINT

The settings of connecting equipment can be confirmed in [I/F Communication Setting].
For details, refer to the following.
☞ 18.1.2 I/F communication setting

26.4.2 Communication detail settings

Make the settings according to the usage environment.

Item	Description	Range
Transmission Speed	Set this item when change the transmission speed used for communication with the connected equipment. (Default: 9600bps)	9600bps, 19200bps, 38400bps, 57600bps 115200bps
Data Bit	Set this item when change the data length used for communication with the connected equipment. (Default: 8bit)	8bit (fixed)
Stop Bit	Specify the stop bit length for communications. (Default: 1bit)	1bit (fixed)
Parity	Specify whether or not to perform a parity check, and how it is performed during communication. (Default: Even)	Even (fixed)
Retry	Set the number of retries to be performed when a communication error occurs. (Default: 3times)	0 to 5times
Timeout Time	Set the time period for a communication to time out. (Default: 3sec)	3 to 30sec
Host Address	Specify the station number of the servo amplifier in the system configuration. (Default: 0)	0 to 31
Delay Time	Set this item to adjust the transmission timing of the communication request from the GOT. (Default: 0ms)	0 to 300 (ms)
Station No. Selection	Specify whether to use the station No. during communication. If [Yes] is selected, the station No. is fixed to "0." (Default: Yes)	Done, None

POINT

(1) Communication interface setting by Utility
The communication interface setting can be changed on the Utility's [Communication setting] after writing [Communication Settings] of project data.
For details on the Utility, refer to the following manual.
☞ 11. COMMUNICATION INTERFACE SETTING (COMMUNICATION SETTING)

(2) Precedence in communication settings
When settings are made by GT Designer3 or the Utility, the latest setting is effective.

HINT

Cutting the portion of multiple connection of the controller
By setting GOT internal device, GOT can cut the portion of multiple connection of the controller. For example, faulty station that has communication timeout can be cut from the system.
For details of the setting contents of GOT internal device, refer to the following manual.
☞ GT Designer3 Version1 Screen Design Manual

26.5 Setting on Servo Amplifier Side

Model	Refer to
MELSERVO-J2-Super Series	26.5.1
MELSERVO-J2M Series	26.5.2
MELSERVO-J4, J3 Series	26.5.3

26.5.1 Connecting to the MELSERVO-J2-Super series

POINT

MELSERVO-J2-Super Series

For details of the MELSERVO-J2-Super series, refer to the following manual.

See the technical manual for the MELSERVO-J2-Super series servo amplifiers.

■ Parameters of MELSERVO-J2-Super series

Enter the parameters of the MELSERVO-J2-Super series.

Item	Set value
Basic parameter No. 15	Station No. setting: 0 to 31 (Default: 0)*1
Basic parameter No. 16	Serial communication function selection (Default: 0000) Basic parameter No. 16 3) 2) 0 1) (1) Serial communication baud rate selection*2 0: 9600bps 1: 19200bps 2: 38400bps 3: 57600bps (2) Serial communication I/F selection 0: RS-232 1: RS-422 (3) Communication response delay time selection 0: Invalid 1: Valid (Response after 800μs or longer delay)
MR-J2S-□A: Expansion parameter 2 No. 53 MR-J2S-□CP: Expansion parameter 2 No. 57 MR-J2S-□CL: Expansion parameter 2 No. 57	Function selection 8 (Default: 0000)*3 Expansion parameter 2 No. 53 or No. 57 0 1) 0 0 (1) Station No. selection for protocol 0: With station No. 1: Without station No.

*1 Avoid duplication of the station No. with any of the other axes.
*2 Specify the same transmission speed as that of the GOT.
*3 To change the set value, enter "000E" to basic parameter No. 19.

POINT

(1) Parameter setting
Set the parameter at the pushbutton switch provided on the operation section of the servo amplifier or setup software.

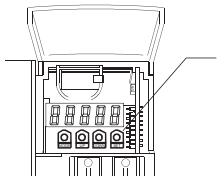

(2) When changing the parameter
Turn off then on the servo amplifier to be effective the new parameter.

26.5.2 Connecting to the MELSERVO-J2M series

POINT

MELSERVO-J2M Series

For details of the MELSERVO-J2M series, refer to the following manual.

☞ See the technical manual for the MELSERVO-J2M series servo amplifiers.

■ Parameter of MELSERVO-J2M series

Enter the parameters of the MELSERVO-J2M series.

Item	Set value
Basic IFU parameter No. 0	Serial communication function selection (Default: 0000) Basic IFU parameter No. 0 3) 2) 0 1) (1) Serial communication transmission speed selection*1 0: 9600bps 1: 19200bps 2: 38400bps 3: 57600bps (2) Serial communication I/F selection 0: RS-232 1: RS-422 (3) Communication response delay time selection 0: Invalid 1: Valid (Response after 800μs or longer delay)
Basic IFU parameter No. 10	Interface unit serial communication station No. selection: 0 to 31 (Default: 0)*2
Basic IFU parameter No. 11	Slot 1 serial communication station No. selection: 0 to 31 (Default: 1)*2
Basic IFU parameter No. 12	Slot 2 serial communication station No. selection: 0 to 31 (Default: 2)*2
Basic IFU parameter No. 13	Slot 3 serial communication station No. selection: 0 to 31 (Default: 3)*2
Basic IFU parameter No. 14	Slot 4 serial communication station No. selection: 0 to 31 (Default: 4)*2
Basic IFU parameter No. 15	Slot 5 serial communication station No. selection: 0 to 31 (Default: 5)*2
Basic IFU parameter No. 16	Slot 6 serial communication station No. selection: 0 to 31 (Default: 6)*2
Basic IFU parameter No. 17	Slot 7 serial communication station No. selection: 0 to 31 (Default: 7)*2
Basic IFU parameter No. 18	Slot 8 serial communication station No. selection: 0 to 31 (Default: 8)*2

*1 Specify the same transmission speed as that of the GOT.
*2 Avoid duplication of the station No. with any of the other units.

POINT

(1) Parameter setting
Set the parameter at the pushbutton switch provided on the operation section of the servo amplifier or setup software.

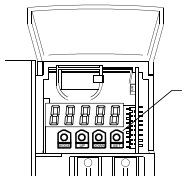

Pushbutton switch provided on the operation section of the servo amplifier

(2) When changing the parameter
Turn off then on the servo amplifier to be effective the new parameter.

26.5.3 Connecting to the MELSERVO-J4, J3, or JE Series

POINT

MELSERVO-J4, J3, or JE Series

For details of the MELSERVO-J4, J3, or JE series, refer to the following manual.

☞ The instruction manual of the MELSERVO-J4/ J3/JE Series servo amplifier

■ Parameters of MELSERVO-J4/J3/JE series

Enter the parameters of the MELSERVO-J4/J3/JE series.

Item	Set value
Basic parameter No.PC20	Station No. setting: 0 to 31 (Default: 0)*1
Basic parameter No.PC21	Serial communication function selection (Default: 0000) Basic parameter No. PC21 2) 1) (1) Serial communication transmission speed selection*2 0: 9600bps 1: 19200bps 2: 38400bps 3: 57600bps 4: 115200bps (2) RS-422 communication response delay time selection 0: Invalid 1: Valid (Response after 800μs or longer delay)

*1 Avoid duplication of the station No. with any of the other axes.

*2 Specify the same transmission speed as that of the GOT.

POINT

(1) Parameter setting

Set the parameter at the pushbutton switch provided on the operation section of the servo amplifier or setup software.

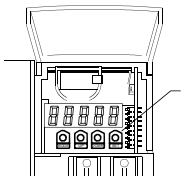

Pushbutton switch provided on the operation section of the servo amplifier

(2) When changing the parameter

Turn off then on the servo amplifier to be effective the new parameter.

26.5.4 Station number setting

Set each station number so that no station number overlaps.

The station number can be set without regard to the cable connection order. There is no problem even if station numbers are not consecutive.

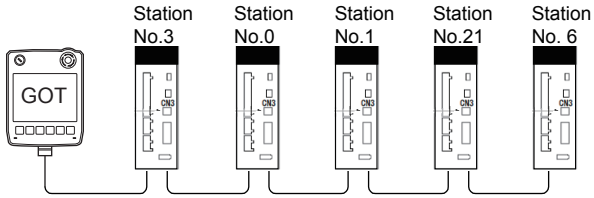

Examples of station number setting

(1) Direct specification

When setting the device, specify the station number of the servo amplifier of which data is to be changed.

Specification range
0 to 31

(2) Indirect specification

When setting the device, indirectly specify the station number of the inverter of which data is to be changed using the 16-bit GOT internal data register (GD10 to GD25).

When specifying the station No. from 100 to 115 on GT Designer3,the value of GD10 to GD25 compatible to the station No.specification will be the station No.of the servo amplifer.

Specification station No.	Compatible device	Setting range
100	GD10	0 to 31 For the setting other than the above, a communication timeout error will occur.
101	GD11	
102	GD12	
103	GD13	
104	GD14	
105	GD15	
106	GD16	
107	GD17	
108	GD18	
109	GD19	
110	GD20	
111	GD21	
112	GD22	
113	GD23	
114	GD24	
115	GD25	

(3) All station specification

Target station differs depending on write-in operation or read-out operation.

- For write-in operation, all station will be a target.
- For read-out operation, only one station will be a target.

26.6 Device Range that Can Be Set

For details on the device range of controllers that can be used on GT14 Handy, refer to the following manuals.

☞ GT Designer3 Version1 Screen Design Manual (Fundamentals)

☞ GOT1000 Series Connection Manual (Mitsubishi Products) for GT Works3

26.7 Precautions

■ Station number setting in the servo system

Make sure to establish servo system with the station number set with the host address.
For details of host address setting, refer to the following.

☞ 26.4.1 Setting communication interface (Communication settings)

■ GOT clock control

Since the servo amplifier does not have a clock function, the settings of [Adjust] or [Broadcast] by GOT clock control will be disabled.

■ Servo amplifier/test operation using the GOT

During the servo amplifier/test operation, when the communication between the GOT and the servo amplifier is interrupted for 0.5 [ms] or more, the servo amplifier decelerates, stops, and then gets into the servo lock status.
During the servo amplifier/test operation, continue the communication constantly by monitoring the status display of the servo amplifier on the GOT screen, etc.

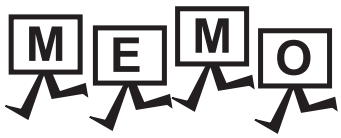
MEMO

27. ROBOT CONTROLLER CONNECTION

27.1 Connectable Model List

The following table shows the connectable models.

Series	Model	Clock	Communication type	GT14 Handy *2	Refer to
Robot controller*1	CRnD-700 CR750-D CR751-D	○	Ethernet	○	27.2.1

*1 For details on the connection with CRnQ-700/CR750-Q/CR751-Q (Q172DRCPU), refer to MITSUBISHI PLC CONNECTIONS (Chapter 19 to 23).

*2 When the robot controller is connected, use the GOT outside the safety fence.

27.2 System Configuration

27.2.1 Connecting to robot controller (CRnD-700)

Communication driver

Ethernet(MELSEC),Q17nNC,CRnD-700

(1) When using the connector conversion box

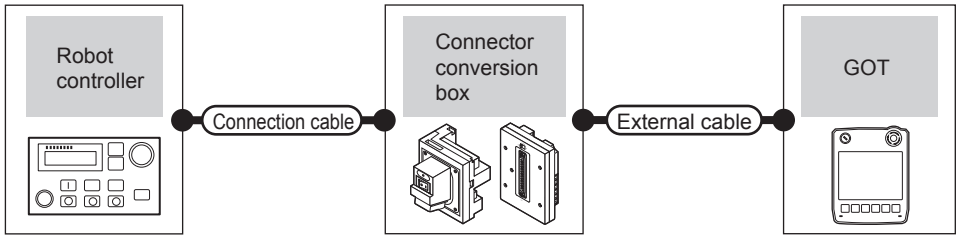

Robot controller		Connection cable*1*2	Connector conversion box	External cable*6	GOT model	Maximum segment length	Number of connectable equipment
Model	Communication type						
CRnD-700*4*5 CR750-D*4*5 CR751-D*4*5	Ethernet	• 10BASE-T Shielded twisted pair cable (STP) or Unshielded twisted pair cable (UTP) Category 3, 4, and 5 • 100BASE-TX Shielded twisted pair cable (STP) Category 5 and 5e	GT16H-CNB-42S	GT14H-C30-42P (3m) GT14H-C60-42P (6m) GT14H-C100-42P (10m)	GT14 Handy	100m*3	1 GOT
			GT16H-CNB-37S	GT11H-C30-37P (3m) GT11H-C60-37P (6m) GT11H-C100-37P (10m)			

*1 The destination connected with the twisted pair cable varies with the configuration of the applicable Ethernet network system. Connect to the Ethernet module, hub, transceiver or other system equipment corresponding to the applicable Ethernet network system. Use cables, connectors, and hubs that meet the IEEE802.3 10BASE-T/100BASE-TX standard. The use of shielded twisted pair cable (STP) is recommended in environments in which the performance against noise is required.

*2 A straight cable is available. When connecting QnUDE(H) and GOT directly with Ethernet cable, remember that the by cross cable is available.

*3 A length between a hub and a node. The maximum distance differs depending on the Ethernet device to be used. The following shows the number of the connectable nodes when a repeater hub is used.
- 10BASE-T: Max. 4 nodes for a cascade connection (500m)
- 100BASE-TX: Max. 2 nodes for a cascade connection (205m)

When switching hubs are used, the cascade connection between the switching hubs has no logical limit for the number of cascades. For the limit, contact the switching hub manufacturer.

*4 For the system configuration of CRnD-700 or CR750-D/CR751-D, refer to the following manuals.

CRnD-700 SET UP MANUAL, CR750-D/CR751-D SET UP MANUAL

*5 Select [CRnD-700] for [Type] in [Ethernet] of GT Designer3. For [Ethernet] of GT Designer3, refer to the following.

27.3.3 Ethernet setting

*6 Use C or later version of GT11H-C□□-37P.

27.3 GOT Side Settings

27.3.1 Setting communication interface (Communication settings)

Set the channel of the connected equipment.

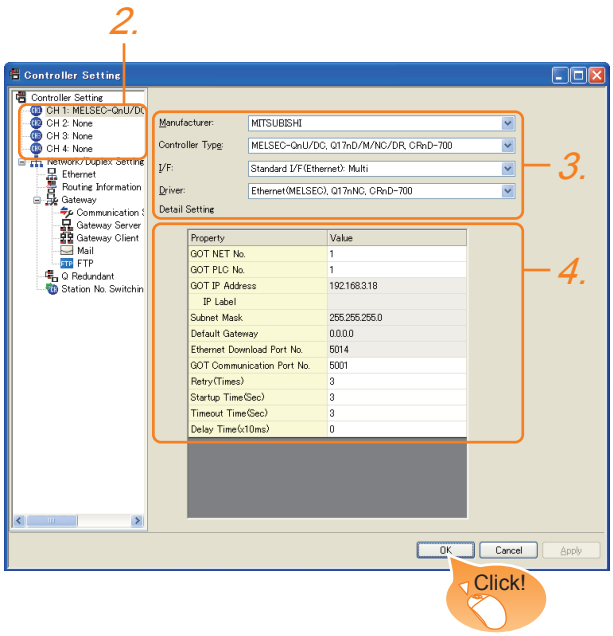

1. Select [Common] → [Controller Setting] from the menu.
2. The Controller Setting window is displayed. Select the channel to be used from the list menu.
3. Set the following items.
   - Manufacturer: Mitsubishi
   - Controller Type: Set according to the Controller Type to be connected.
   - I/F: Interface to be used
   - Driver: Ethernet(MELSEC), Q17nNC, CRnD-700
4. The detailed setting is displayed after Manufacturer, Controller Type, I/F, and Driver are set. Make the settings according to the usage environment.

27.3.2 Communication detail settings

Click the OK button when settings are completed.

POINT

The settings of connecting equipment can be confirmed in [I/F Communication Setting].
For details, refer to the following.

18.1.2 I/F communication setting

27.3.2 Communication detail settings

Make the settings according to the usage environment.

Item	Description	Range
GOT NET No.	Set the network No. of the GOT. (Default: 1)	1 to 239
GOT PLC No.*2	Set the station No. of the GOT. (Default: 1)	1 to 64
GOT IP Address*1	Set the IP address of the GOT. (Default: 192.168.3.18)	0.0.0.0 to 255.255.255.255
Subnet Mask*1	Set the subnet mask for the sub network. (Only for connection via router) If the sub network is not used, the default value is set. (Default: 255.255.255.0)	0.0.0.0 to 255.255.255.255
Default Gateway*1	Set the router address of the default gateway where the GOT is connected. (Only for connection via router) (Default: 0.0.0.0)	0.0.0.0 to 255.255.255.255
Ethernet Download Port No.*1	Set the GOT port No. for Ethernet download. (Default: 5014)	1024 to 5010, 5014 to 65534 (Except for 5011, 5012, 5013, and 49153)
GOT Communication Port No.	Set the GOT port No. for the connection with the Ethernet module. (Default: 5001)	1024 to 5010, 5014 to 65534 (Except for 5011, 5012, 5013, and 49153)
Retry	Set the number of retries to be performed when a communication timeout occurs. When receiving no response after retries, the communication times out. (Default: 3times)	0 to 5times
Startup Time	Specify the time period from the GOT startup until GOT starts the communication with the PLC CPU. (Default: 3sec)	3 to 255sec
Timeout Time	Set the time period for a communication to time out. (Default: 3sec)	3 to 90sec
Delay Time	Set the delay time for reducing the load of the network/destination PLC. (Default: 0ms)	0 to 10000 (× 10ms)

*1 Click the Setting button and perform the setting in the [GOT IP Address Setting] screen.

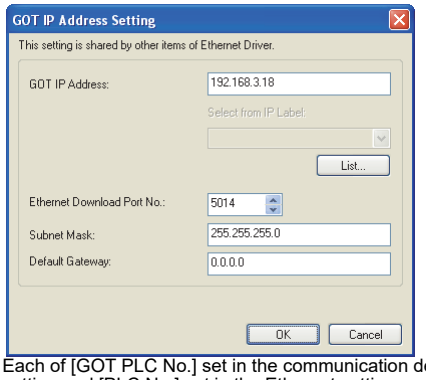

*2 Each of [GOT PLC No.] set in the communication detail setting and [PLC No.] set in the Ethernet setting must be set to different station numbers.

27.3.3 Ethernet setting

27.3.3 Ethernet setting

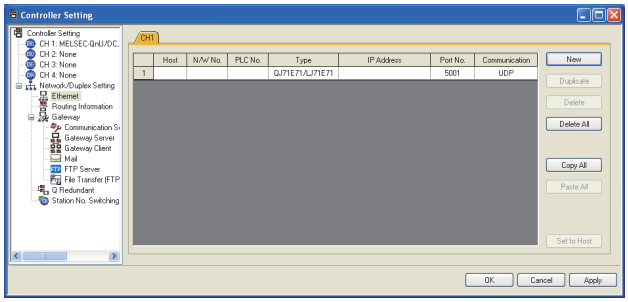

Item	Description	Range
Host	The host is displayed. (The host is indicated with an asterisk (*).)	-
N/W No.	Set the network No. of the connected Ethernet module. (Default: blank)	1 to 239
PLC No.*2	Set the station No. of the connected Ethernet module. (Default: blank)	1 to 64
Type*1	Set the type of the connected Ethernet module. CRnD-700 (fixed)	CRnD-700 (fixed)
IP Address	Set the IP address of the connected Ethernet module. (Default: blank)	0.0.0.0 to 255.255.255.255
Port No.	Set the port No. of the connected Ethernet module. (Default: 5001)	1024 to 65534
Communication	UDP (fixed)	UDP (fixed)

*1 Select [CRnD-700] for [Controller Type].
*2 Each of [GOT PLC No.] set in the communication detail setting and [PLC No.] set in the Ethernet setting must be set to different station numbers.

27.3.2 Communication detail settings

POINT

(1) Example of [Ethernet]
For examples of [Ethernet], refer to the following.

27.4 PLC Side Setting

(2) Communication interface setting by Utility
The communication interface setting can be changed on the Utility's [Communication setting] after writing [Communication Settings] of project data.
For details on the Utility, refer to the following manual.

11. COMMUNICATION INTERFACE SETTING (COMMUNICATION SETTING)

(3) Precedence in communication settings
When settings are made by GT Designer3 or the Utility, the latest setting is effective.

27.4 PLC Side Setting

Model		Refer to
Robot controller	CRnD-700	27.4.1

27.4.1 Connecting to robot controller (CRnD-700)

This section describes the settings of a GOT and a robot controller in the following case of system configuration.

POINT

Robot controller (CRnD-700)

For details of the robot controller (CRnD-700), refer to the following manual.

☞ CRnD-700 SET UP MANUAL

■ System configuration

☞ ■ [Controller Setting] and [Ethernet] of GT Designer3

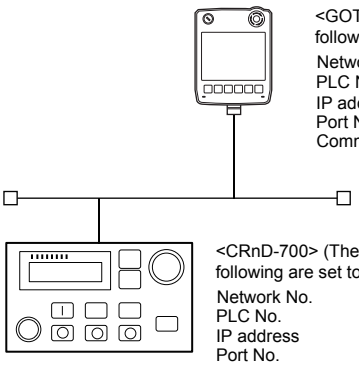

<GOT> (The settings other than the following are set to the default)

Network No. : 1
PLC No. : 1
IP address : 192.168.0.18
Port No. : 5001
Communication format : UDP (fixed)

<CRnD-700> (The settings other than the following are set to the default)

Network No. : 1
PLC No. : 2
IP address : 192.168.0.19
Port No. : 5001
Communication format : UDP (fixed)

☞ ■ Parameter settings for CRnD-700

■ Parameter settings for CRnD-700

(1) For RT ToolBox2

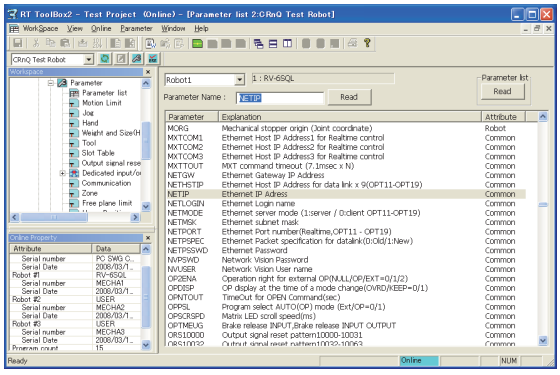

Item	Set value	Setting necessity at GOT connection
NETIP	192.168.0.19	○
GOTPORT	5001	○

○: Necessary △: As necessary ×: Not necessary

(2) For R32TB or R56TB

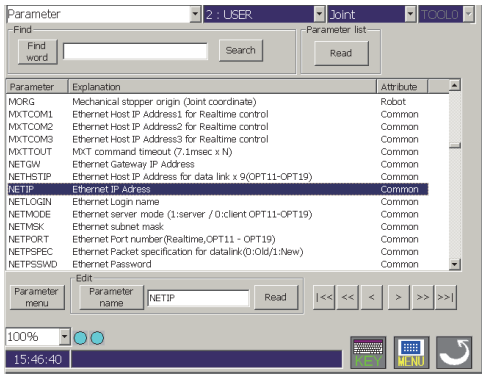

(For R56TB)

Item	Set value	Setting necessity at GOT connection
NETIP	192.168.0.19	○
GOTPORT	5001	○

○: Necessary △: As necessary ×: Not necessary

■ [Controller Setting] and [Ethernet] of GT Designer3

(1) Communication settings

Item	Set value
GOT NET No.	1
GOT PLC No.	1
GOT IP Address	192.168.0.18
GOT Port No. (Communication)	5001
GOT Port No. (Ethernet Download)	5014
Default Gateway	0.0.0.0
Subnet Mask	255.255.255.0
Retry	3times
Startup Time	3sec
Timeout Time	3sec
Delay Time	0ms

(2) Ethernet setting

Item		Set value
Ethernet setting No.1	Host	*
	N/W No.	1
	PLC No.	2
	Type	CRnD-700
	IP Address	192.168.0.19
	Port No.	5001 (fixed)
	Communication	UDP (fixed)

POINT

[Controller Setting] and [Ethernet] of GT Designer3

For [Controller Setting] and [Ethernet] of GT Designer3, refer to the following.

☞ 27.3.1 Setting communication interface (Communication settings)

■ Confirming communication state of CRnD-700

(1) When using the Command Prompt of Windows®
Execute a Ping command at the Command Prompt of Windows®.

(a) When normal communication
C:\>Ping 192.168.0.19
Reply from 192.168.0.19: bytes=32 time<1ms
TTL=64

(b) When abnormal communication
C:\>Ping 192.168.0.19
Request timed out.

(2) When abnormal communication
At abnormal communication, check the followings and execute the Ping command again.
- Cable connecting condition
- Parameter settings
- Operation state of the CRnD-700. (faulty or not)
- The IP address of the CRnD-700 specified for the Ping command.

27.5 Device Range that Can Be Set

For details on the device range of controllers that can be used on GT14 Handy, refer to the following manuals.

☞ GT Designer3 Version1 Screen Design Manual (Fundamentals)

☞ GOT1000 Series Connection Manual (Mitsubishi Products) for GT Works3

27.6 Precautions

■ When setting IP address

Do not use "0" and "255" at the end of an IP address.

(Numbers of *.*.*.0 and *.*.*.255 are used by the system)

The GOT may not monitor the controller correctly with the above numbers.

Consult with the administrator of the network before setting an IP address to the GOT and controller.

■ When connecting to the multiple network equipment (including GOT) in a segment

By increasing the network load, the transmission speed between the GOT and PLC may be reduced.

The following actions may improve the communication performance.
- Using a switching hub
- More high speed by 100BASE-TX (100Mbps)
- Reduction of the monitoring points on GOT

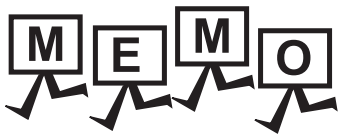
MEMO

28. CNC CONNECTION

28.1 Connectable Model List

The following table shows the connectable models.

Series	Model	Clock	Communication type	GT14 Handy	Refer to
MELDAS C6/C64*1	FCA C6 FCA C64	×	RS-232 RS-422	○	28.2.1
			Ethernet	○	28.2.2

*1 Use the NC system software version D0 or later.

For the connection to CNC C70, refer to MITSUBISHI PLC CONNECTIONS (Chapter 19 to Chapter 23).

28.2 System Configuration

28.2.1 Direct connection to CPU

Communication driver

AJ71C24, MELDAS C6*

(1) When using the connector conversion box

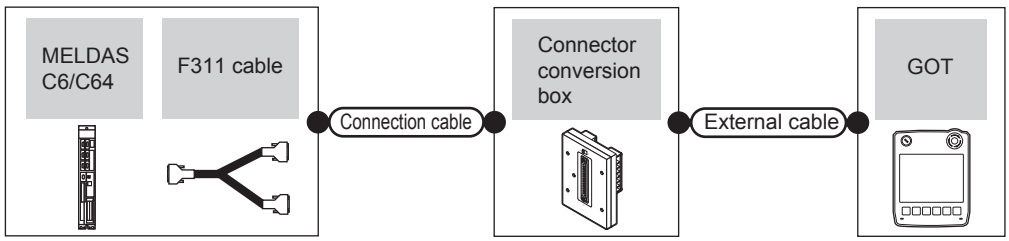

CNC			Connection cable	Connector conversion box	External cable	GOT model	Total distance *4	Number of connectable equipment
Model	F311 cable	Communication type	Cable model					
MELDAS C6/C64 *1	-	RS-232	User preparing RS232 connection diagram 1)	GT11H-CNB-37S	GT11H-C30-37P (3m)	GT14 Handy	6m	1 GOT for 1 PLC
MELDAS C6/C64 *2	User preparing *3	RS-422	GT01-C30R4-25P (3m) GT01-C100R4-25P (10m)	GT11H-CNB-37S	GT11H-C30-37P (3m) GT11H-C60-37P (6m) GT11H-C100-37P (10m)	GT14 Handy	13m	

*1 Connect the connector of the CNC side to TERMINAL.

*2 Connect the connector of the CNC side to SIO.

*3 To be prepared by the user, referring the following.

C6/C64 CONNECTION AND MAINTENANCE MANUAL (BNP-B2255) F311 Cable Manufacturing Drawing

*4 The distance from the GOT to the CNC (F311 cable + Connection cable + External connection cable)

(2) When using the external cable (GT11H-C□□□-37P)

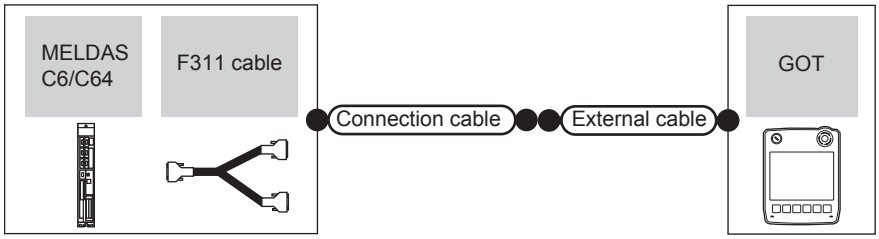

CNC			Connection cable	External cable	GOT model	Total distance *4	Number of connectable equipment
Model	F311 cable	Communication type	Cable model				
MELDAS C6/C64*1	-	RS-232	User preparing RS232 connection diagram 2)	GT11H-C30-37P (3m)	GT14 Handy	6m	1 GOT for 1 PLC
MELDAS C6/C64*2	User preparing *3	RS-422	GT11H-C15R4-25P (1.5m)	GT11H-C30-37P (3m) GT11H-C60-37P (6m) GT11H-C100-37P (10m)	GT14 Handy	13m	

*1 Connect the connector of the CNC side to TERMINAL.
*2 Connect the connector of the CNC side to SIO.
*3 To be prepared by the user, referring the following.
C6/C64 CONNECTION AND MAINTENANCE MANUAL (BNP-B2255) F311 Cable Manufacturing Drawing
*4 The distance from the GOT to the CNC (F311 cable + Connection cable + External connection cable)

(3) When using the external cable (GT11H-C□□□)

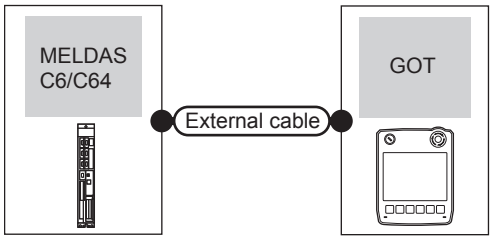

CNC		External cable	GOT model	Total distance	Number of connectable equipment
Model	Communication type				
MELDAS C6/C64*1	RS-232	GT11H-C30 (3m) GT11H-C60 (6m) User preparing RS232 connection diagram 3)	GT14 Handy	6m	1 GOT for 1 PLC

*1 Connect the connector of the CNC side to TERMINAL.

28.2.2 Ethernet connection

(1) When using the connector conversion box

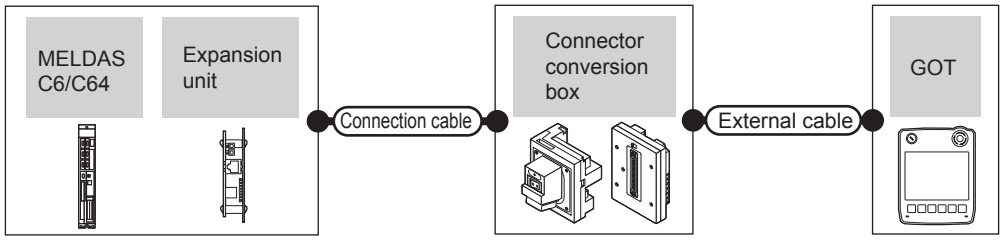

CNC			Connection cable*1	Connector conversion box	External cable*5	GOT model	Maximum segment length	Number of connectable equipment
Model	Expansion unit	Communication type	Cable model					
MELDAS C6/C64	FCU6-EX875 *3*4	Ethernet	• 10BASE-T Shielded twisted pair cable (STP) or Unshielded twisted pair cable (UTP): Category 3, 4, and 5 • 100BASE-TX Shielded twisted pair cable (STP): Category 5 and 5e	GT16H-CNB-42S	GT14H-C30-42P (3m) GT14H-C60-42P (6m) GT14H-C100-42P (10m)	GT14 Handy	100m*2	128 GOTs (recommended to 16 units or less)
				GT16H-CNB-37S	GT11H-C30-37P (3m) GT11H-C60-37P (6m) GT11H-C100-37P (10m)			

*1 The destination connected with the twisted pair cable varies with the configuration of the applicable Ethernet network system. Connect to the Ethernet module, hub, transceiver or other system equipment corresponding to the applicable Ethernet network system.
Use cables, connectors, and hubs that meet the IEEE802.3 10BASE-T/100BASE-TX standard.
A cross cable is available for connecting the GOT to the Ethernet module.
The use of shielded twisted pair cable (STP) is recommended in environments in which the performance against noise is required.

*2 A length between a hub and a node.
The maximum distance differs depending on the Ethernet device to be used.
The following shows the number of the connectable nodes when a repeater hub is used.
• 10BASE-T: Max. 4 nodes for a cascade connection (500m)
• 100BASE-TX: Max. 2 nodes for a cascade connection (205m)
When switching hubs are used, the cascade connection between the switching hubs has no logical limit for the number of cascades.
For the limit, contact the switching hub manufacturer.

*3 For the system configuration of the expansion unit, refer to the following manuals.
C6/C64 CONNECTION AND MAINTENANCE MANUAL BNP-B2255
C6/C64 NETWORK INSTRUCTION MANUAL BNP-B2373

*4 Select [AJ71QE71] for [Type] in [Ethernet] of GT Designer3.
For [Ethernet] of GT Designer3, refer to the following.
28.4.3 Ethernet setting

*5 Use C or later version of GT11H-C□□-37P.

28.3 Connection Diagram

The following diagram shows the connection between the GOT and the CNC.

28.3.1 RS-232 cable

■ Connection Diagram

RS232 connection diagram 1)

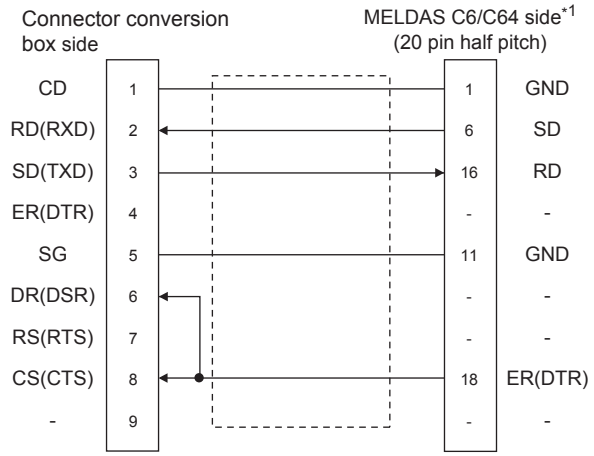

RS232 connection diagram 2)

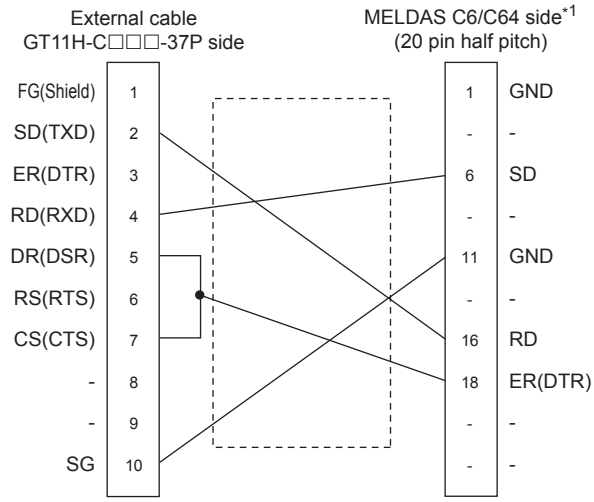

RS232 connection diagram 3)

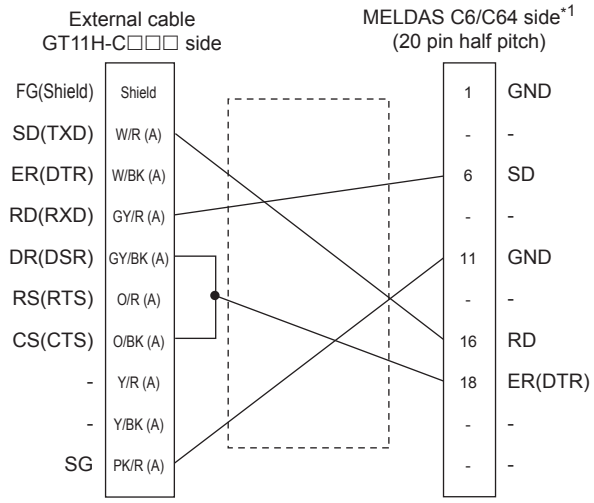

*1 For details of the MELDAS C6/C64 side connection, refer to the following manuals.

☞ C6/C64 CONNECTION AND MAINTENANCE MANUAL BNP-B2255

☞ C6/C64 NETWORK INSTRUCTION MANUAL BNP-B2373

■ Precautions when preparing a cable

(1) Cable length
The total distance (between GOT and controllers) of RS-232 cable must be 6m or less.

(2) Connector conversion box side connector
For the connector conversion box side connector, refer to the following.

☞ 6.6 Connector Conversion Box

(3) External cable side connector
For the connector specifications of the external cable side, refer to the following.

☞ 8.2 External Cable, Relay Cable

28.4 GOT Side Settings

28.4.1 Setting communication interface (Communication settings)

Set the channel of the connected equipment.

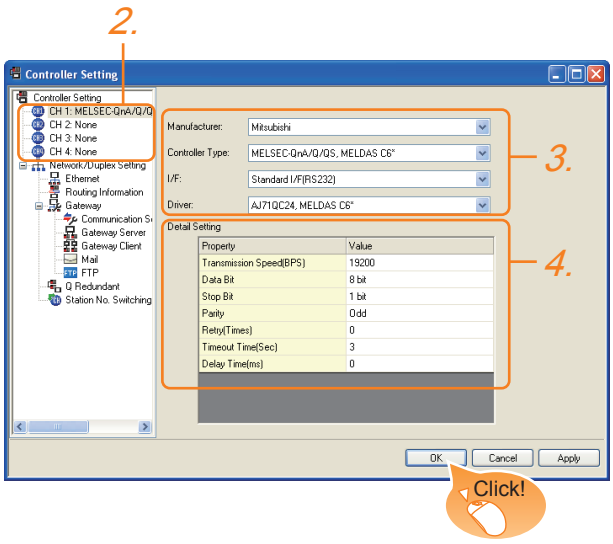

1. Select [Common] → [Controller Setting] from the menu.
2. The Controller Setting window is displayed. Select the channel to be used from the list menu.
3. Set the following items.
   - Manufacturer: Mitsubishi
   - Controller Type: MELSEC-QnA/Q/QS, MELDAS C6*
   - I/F: Interface to be used
   - Driver:
     For direct connection to CPU
     • AJ71QC24, MELDAS C6*
     For Ethernet connection
     • Ethernet (MELSEC), Q17nNC, CRnD-700
4. The detailed setting is displayed after Manufacturer, Controller Type, I/F, and Driver are set.
   Make the settings according to the usage environment.
   28.4.2 Communication detail settings

Click the OK button when settings are completed.

POINT

The settings of connecting equipment can be confirmed in [I/F Communication Setting].
For details, refer to the following.
18.1.2 I/F communication setting

28.4.2 Communication detail settings

Make the settings according to the usage environment.

(1) AJ71QC24, MELDAS C6*

Item	Description	Range
Transmission Speed	Set this item when change the transmission speed used for communication with the connected equipment. (Default: 19200bps)	4800bps, 9600bps, 19200bps, 38400bps, 57600bps, 115200bps
Data Bit	Set this item when change the data length used for communication with the connected equipment. (Default: 8bit)	8bit (fixed)
Stop Bit	Specify the stop bit length for communications. (Default: 1bit)	1bit (fixed)
Parity	Specify whether or not to perform a parity check, and how it is performed during communication. (Default: Odd)	Odd (fixed)
Retry	Set the number of retries to be performed when a communication error occurs. (Default: 0time)	0 to 5times
Timeout Time	Set the time period for a communication to time out. (Default: 3sec)	3 to 30sec
Delay Time	Set this item to adjust the transmission timing of the communication request from the GOT. (Default: 0ms)	0 to 300 (ms)

(2) Ethernet (MELSEC), Q17nNC, CRnD-700

Item	Description	Range
GOT NET No.	Set the network No. of the GOT. (Default: 1)	1 to 239
GOT PLC No.*2	Set the station No. of the GOT. (Default: 1)	1 to 64
GOT IP Address*1	Set the IP address of the GOT. (Default: 192.168.3.18)	0.0.0.0 to 255.255.255.255
Subnet Mask*1	Set the subnet mask for the sub network. (Only for connection via router) If the sub network is not used, the default value is set. (Default: 255.255.255.0)	0.0.0.0 to 255.255.255.255
Default Gateway*1	Set the router address of the default gateway where the GOT is connected. (Only for connection via router) (Default: 0.0.0.0)	0.0.0.0 to 255.255.255.255
Ethernet Download Port No.*1	Set the GOT port No. for Ethernet download. (Default: 5014)	1024 to 5010, 5014 to 65534 (Except for 5011, 5012, 5013, and 49153)
GOT Communication Port No.	Set the GOT port No. for the connection with the Ethernet module. (Default: 5001)	1024 to 5010, 5014 to 65534 (Except for 5011, 5012, 5013, and 49153)
Retry	Set the number of retries to be performed when a communication timeout occurs. When receiving no response after retries, the communication times out. (Default: 3times)	0 to 5times
Startup Time	Specify the time period from the GOT startup until GOT starts the communication with the PLC CPU. (Default: 3sec)	3 to 255 sec
Timeout Time	Set the time period for a communication to time out. (Default: 3sec)	3 to 90sec
Delay Time	Set the delay time for reducing the load of the network/destination PLC. (Default: 0ms)	0 to 10000 (× 10ms)

*1 Click the Setting button and perform the setting in the [GOT IP Address Setting] screen.

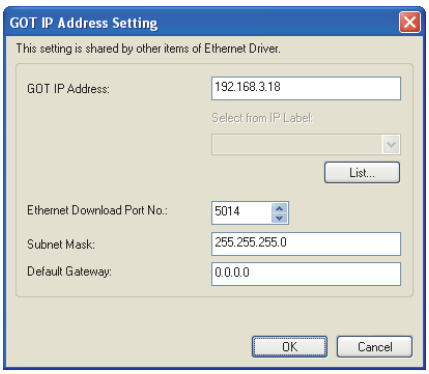

*2 Each of [GOT PLC No.] set in the communication detail setting and [PLC No.] set in the Ethernet setting must be set to different station numbers.

28.4.3 Ethernet setting

POINT

(1) Communication interface setting by Utility
The communication interface setting can be changed on the Utility's [Communication setting] after writing [Communication Settings] of project data.
For details on the Utility, refer to the following manual.

11. COMMUNICATION INTERFACE SETTING (COMMUNICATION SETTING)

(2) Precedence in communication settings
When settings are made by GT Designer3 or the Utility, the latest setting is effective.

28.4.3 Ethernet setting

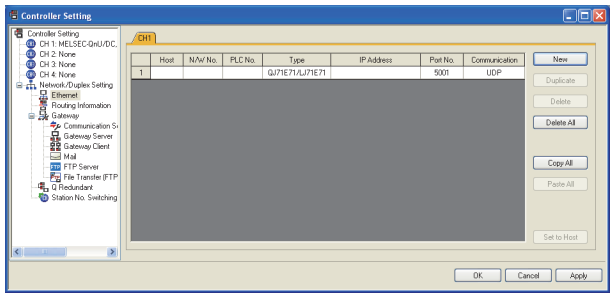

Item	Description	Range
Host	The host is displayed. (The host is indicated with an asterisk (*).)	-
N/W No.	Set the network No. of the connected Ethernet module. (Default: blank)	Network No. of CNC*1
PLC No.*2	Set the station No. of the connected Ethernet module. (Default: blank)	Station No. of CNC
Type	Set the type of the connected Ethernet module. (Default: QJ71E71)	AJ71QE71
IP Address	Set the IP address of the connected Ethernet module. (Default: blank)	IP address of CNC
Port No.	Set the port No. of the connected Ethernet module. (Default: 5001)	5001
Communication	UDP (fixed)	UDP (fixed)

*1 For operating CNC monitor function, set N/W No. to "239".

*2 Each of [GOT PLC No.] set in the communication detail setting and [PLC No.] set in the Ethernet setting must be set to different station numbers.

28.4.2 Communication detail settings

28.5 CNC Side Settings

28.5.1 Ethernet Connection

■ System configuration

The following shows the example of the system configuration when using the CNC monitor function.

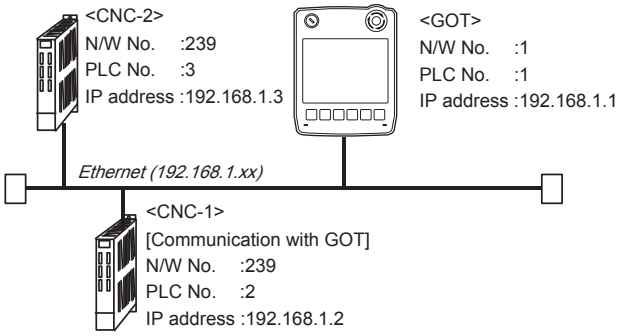

■ Parameter setting

Set parameters related to Ethernet with MELSEC's peripheral devices in the same way as parameter setting of MELSEC CPU, and write them on CNC by PC.

(1) Network parameter setting

Set the network parameters by peripheral device and write them on CNC. An example of parameter setting by GPPW is as follows. Set the start I/O No. as follows according to the expansion slot to which the unit is inserted.

(a) Unit No.

Slot position	Start I/O No.	Mounting position of extension unit
EXT1	0200	
EXT2	0280	
EXT3	0300	

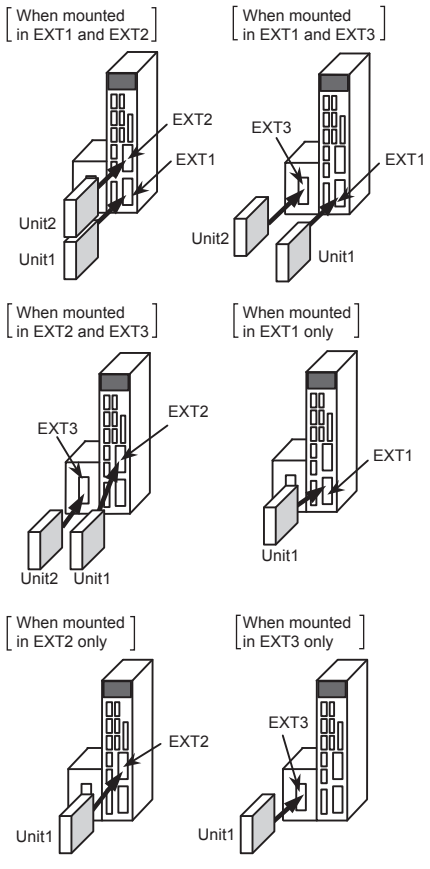

(b) Example of GX Developer setting

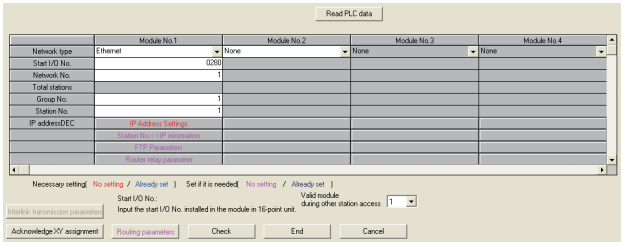

For details of the parameter setting, refer to the following.

C6/C64 NETWORK INSTRUCTION MANUAL
BNP-B2373

POINT

IP address setting

IP address setting on GX Developer is invalid.
Set the IP address by the 7-segment LED and rotary switch of the CNC side, referring to the next page.

(2) CNC side parameter setting

Confirm the CNC side parameter setting with the settings of IP address, gateway address, subnet mask and port No. by the 7-segment LED and rotary switch of the CNC side.
For details of the parameter setting operation, refer to the following.

C6/C64 NETWORK INSTRUCTION MANUAL
BNP-B2373 IV. Setting the Ethernet IP Address

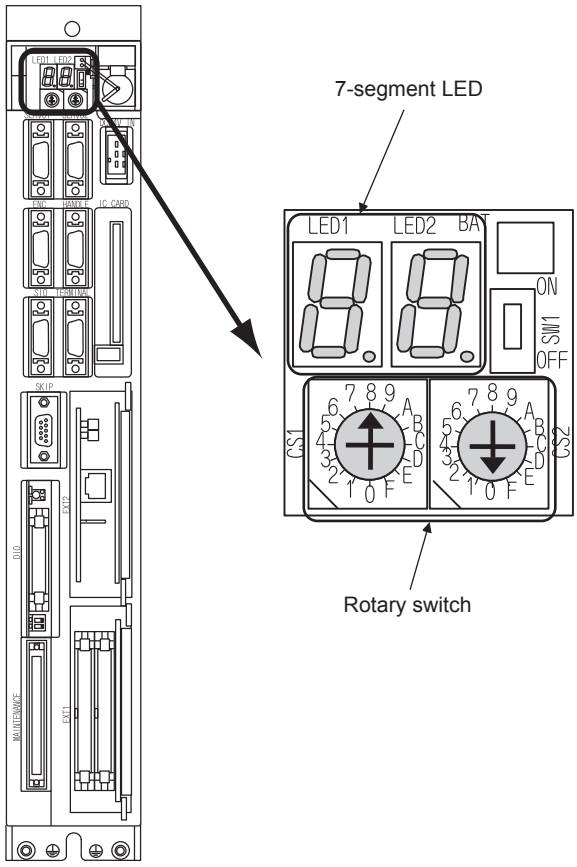

MULTIPLE GOT CONNECTION FUNCTION

29. MULTIPLE GOT CONNECTION FUNCTION . . . . . 29 - 1

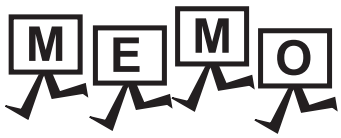
MEMO

29. MULTIPLE GOT CONNECTION FUNCTION

29.1 Connectable Model List

For details of connectable models, refer to the following.

☞ 21. DIRECT CONNECTION TO CPU
☞ 22. COMPUTER LINK CONNECTION

29.2 System Configuration

29.2.1 Connecting the GOT to PLC via RS-232 interface

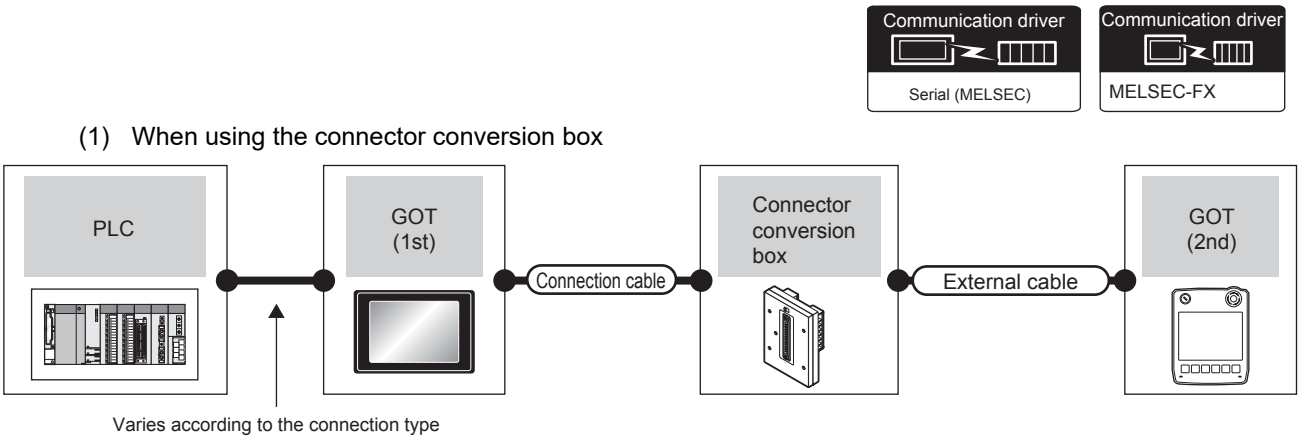

PLC		GOT (1st)	Connection cable		Connector conversion box	External cable	GOT (2nd)		Number of connectable equipment
Connection type	Communication type	Model	Communication type	Cable model			Model	Max. distance	
For the system configuration between the GOT and PLC, refer to the following. ☞ DIRECT CONNECTION TO CPU ☞ COMPUTER LINK CONNECTION*1	RS-232	GT14	RS-422	User preparing RS422 connection diagram 1)	GT11H-CNB-37S	GT11H-C30-37P (3m) GT11H-C60-37P (6m) GT11H-C100-37P (10m)	GT14 Handy	13m	2 GOTs

*1 When connected to the Computer link, the multiple connection function supports only RCPU, QCPU (Q mode) and LCPU.

(2) When using the external cable (GT11H-C□□□-37P)

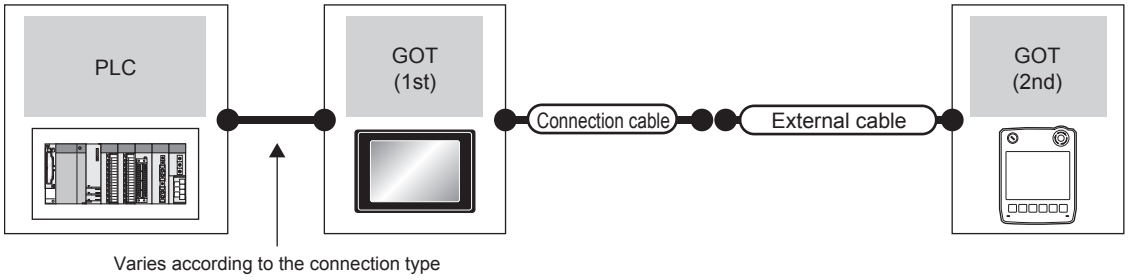

PLC		GOT (1st)	Connection cable		External cable	GOT (2nd)		Number of connectable equipment
Connection type	Communication type	Model	Communication type	Cable model		Model	Max. distance	
For the system configuration between the GOT and PLC, refer to the following. ☞ DIRECT CONNECTION TO CPU ☞ COMPUTER LINK CONNECTION*1	RS-232	GT14	RS-422	User preparing RS422 connection diagram 2)	GT11H-C30-37P (3m) GT11H-C60-37P (6m) GT11H-C100-37P (10m)	GT14 Handy	13m	2 GOTs

*1 When connected to the Computer link, the multiple connection function supports only RCPU, QCPU (Q mode) and LCPU.

(3) When using the external cable (GT11H-C□□□)

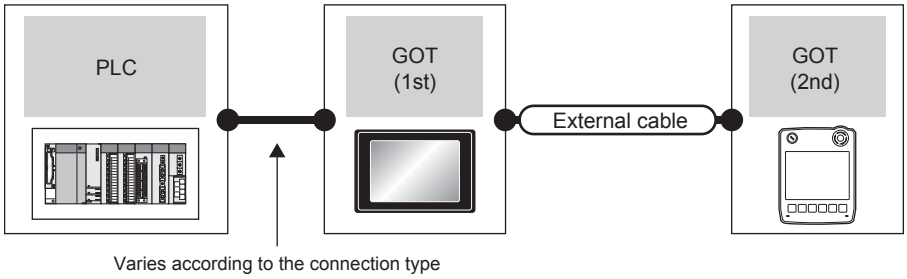

PLC		GOT (1st)	External cable		GOT (2nd)		Number of connectable equipment
Connection type	Communication type	Model	Communication type		Model	Max. distance	
For the system configuration between the GOT and PLC, refer to the following. ☞ DIRECT CONNECTION TO CPU ☞ COMPUTER LINK CONNECTION*1	RS-232	GT14	RS-422	GT11H-C30-37P(3m) GT11H-C60-37P(6m) GT11H-C100-37P(10m) User preparing RS422 connection diagram 3)	GT14 Handy	13m	2 GOTs

*1 When connected to the Computer link, the multiple connection function supports only RCPU, QCPU (Q mode) and LCPU.

29.2.2 Connecting the GOT to PLC via RS-422 interface

Communication driver: Serial (MELSEC)

Communication driver: MELSEC-FX

(1) When using the connector conversion box

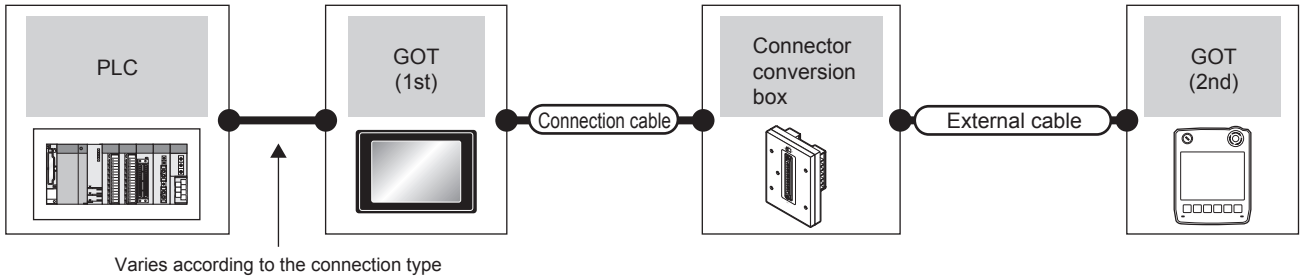

PLC		GOT (1st)	Connection cable		Connector conversion box	External cable	GOT (2nd)		Number of connectable equipment
Connection type	Communication type	Model	Communication type	Cable model			Model	Max. distance	
For the system configuration between the GOT and PLC, refer to the following. DIRECT CONNECTION TO CPU COMPUTER LINK CONNECTION*1	RS-422	GT14	RS-232	User preparing RS232 connection diagram 1)	GT11H-CNB-37S	GT11H-C30-37P (3m)	GT14 Handy	6m	2 GOTs

*1 When connected to the Computer link, the multiple connection function supports only RCPU, QCPU (Q mode) and LCPU.

(2) When using the external cable (GT11H-C□□□-37P)

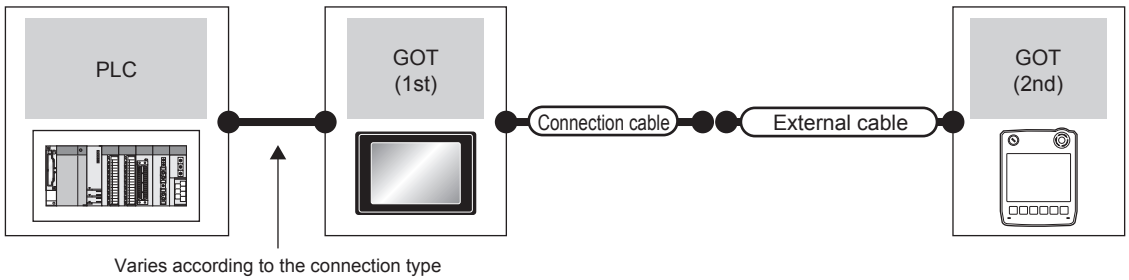

PLC		GOT (1st)	Connection cable		External cable	GOT (2nd)		Number of connectable equipment
Connection type	Communication type	Model	Communication type	Cable model		Model	Max. distance	
For the system configuration between the GOT and PLC, refer to the following. DIRECT CONNECTION TO CPU COMPUTER LINK CONNECTION*1	RS-422	GT14	RS-232	User preparing RS232 connection diagram 2)	GT11H-C30-37P (3m)	GT14 Handy	6m	2 GOTs

*1 When connected to the Computer link, the multiple connection function supports only RCPU, QCPU (Q mode) and LCPU.

(3) When using the external cable (GT11H-C□□□)

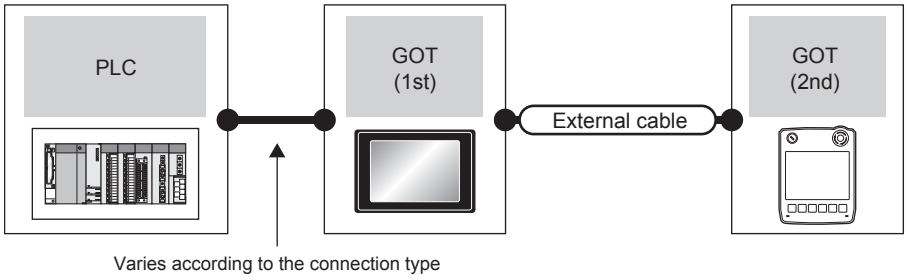

PLC		GOT (1st)	External cable		GOT (2nd)		Number of connectable equipment
Connection type	Communication type	Model	Communication type		Model	Max. distance	
For the system configuration between the GOT and PLC, refer to the following. ☞ DIRECT CONNECTION TO CPU ☞ COMPUTER LINK CONNECTION*1	RS-422	GT14	RS-232	GT11H-C30 (3m) GT11H-C60 (6m) User preparing RS232 connection diagram 3)	GT14 Handy	6m	2 GOTs

*1 When connected to the Computer link, the multiple connection function supports only RCPU, QCPU (Q mode) and LCPU.

29.3 Connection Diagram

The following diagram shows the connection between the GOT and the PLC.

29.3.1 RS-232 cable

■ Connection diagram

RS232 connection diagram 1)

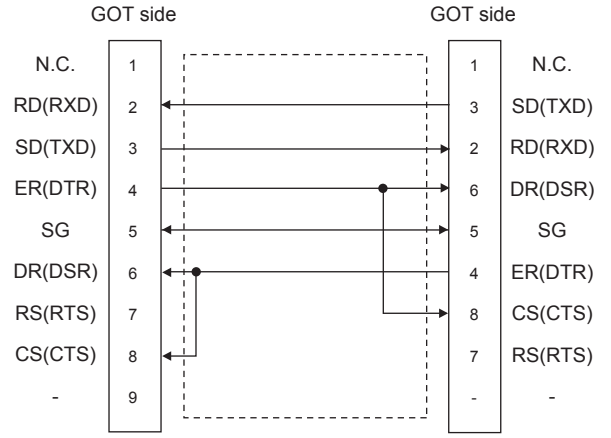

RS232 connection diagram 2)

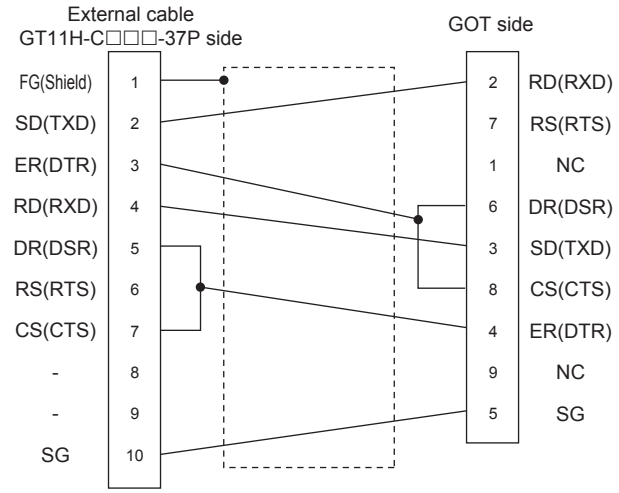

RS232 connection diagram 3)

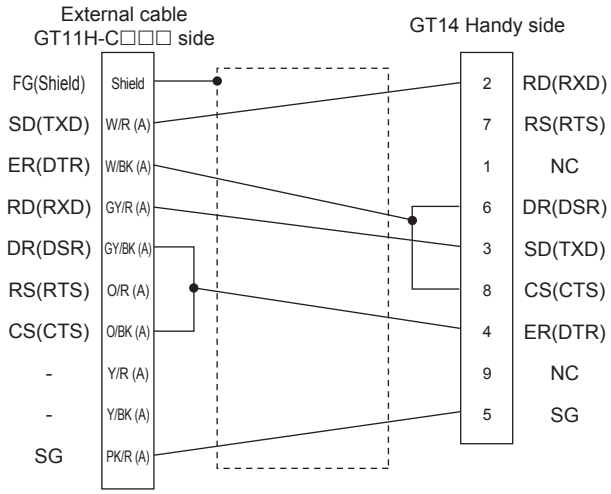

■ Precautions when preparing a cable

(1) Cable length
The length of the RS-232 cable must be 15m or less.

(2) Connector conversion box side connector
For the connector conversion box side connector, refer to the following.

☞ 6.6 Connector Conversion Box

(3) External cable side connector
For the connector specifications of the external cable side, refer to the following.

☞ 8.2 External Cable, Relay Cable

29.3.2 RS-422 cable

■ Connection diagram

RS422 connection diagram 1)

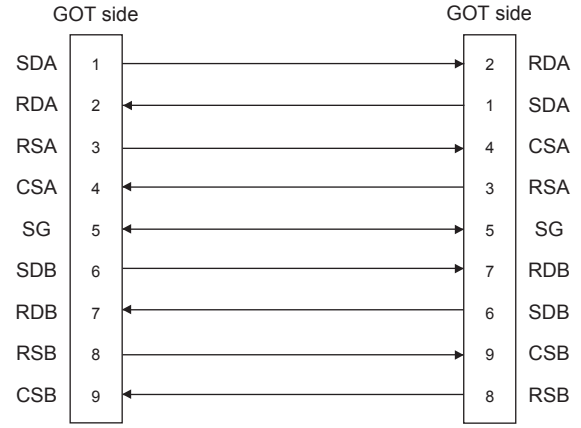

RS422 connection diagram 2)

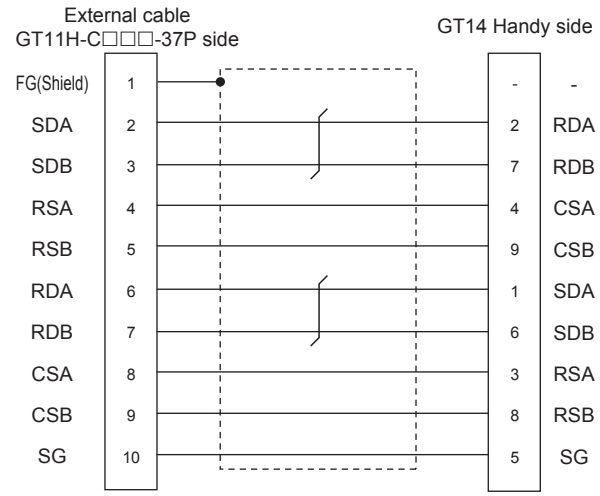

RS422 connection diagram 3)

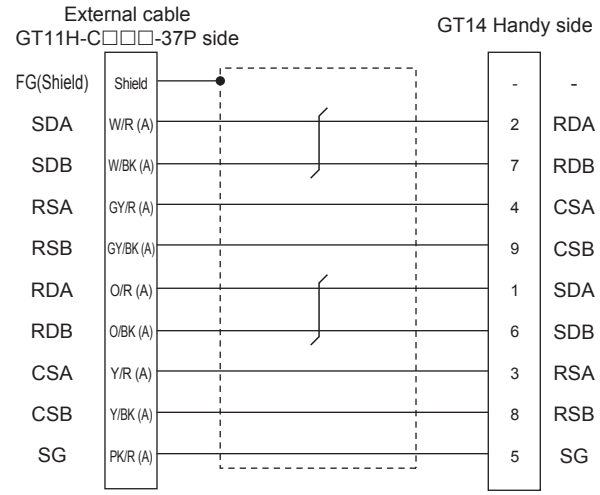

■ Precautions when preparing a cable

(1) Cable length
The length of the RS-422 cable must be 30m or less.

(2) Connector conversion box side connector
For the connector conversion box side connector, refer to the following.

☞ 6.6 Connector Conversion Box

(3) External cable side connector
For the connector specifications of the external cable side, refer to the following.

☞ 8.2 External Cable, Relay Cable

29.4 GOT Side Settings

29.4.1 Setting communication interface (Communication settings)

This section explains with an example of the following system configuration.

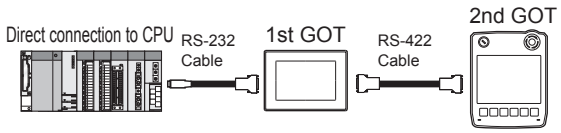

■ Setting for the first GOT

(1) Settings of communication interface connecting to the PLC

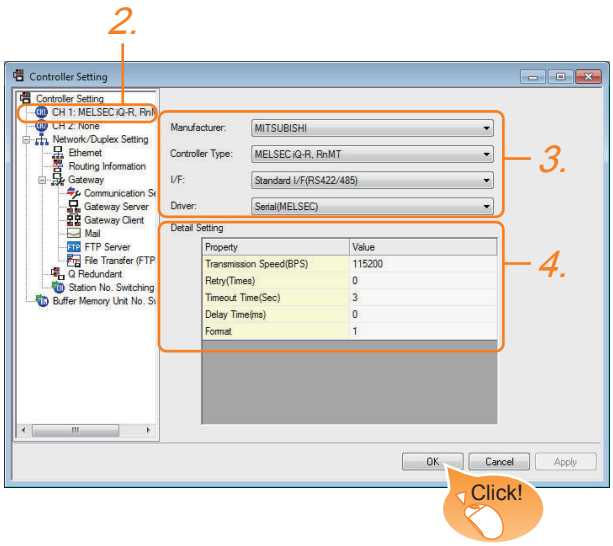

1. Select [Common] → [Controller Setting] from the menu.
2. The Controller Setting window is displayed. Select the channel to be used from the list menu.
3. Set the following items.
   - Manufacturer: Mitsubishi
   - Controller Type: Set according to the Controller Type to be connected.
   - I/F: Standard I/F (RS232)
   - Driver: Set either of the following option according to the Controller Type to be connected.
     - Serial (MELSEC)
     - MELSEC-FX
4. The detailed setting is displayed after Manufacturer, Controller Type, I/F, and Driver are set.
   Make the settings according to the usage environment.
   29.4.2 Communication detail settings

Click the OK button when settings are completed.

(2) Settings of communication interface connecting to the second GOT

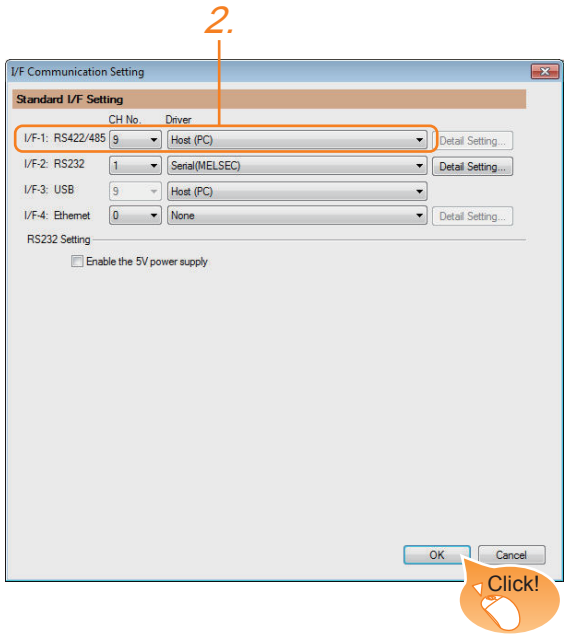

1. Select [Common] → [I/F Communication Setting] from the menu.
2. The I/F Connection list window is displayed. Select the following.
   - I/F-1: RS422/232
     CH No.: 9
     Driver: Host (PC)

Click the OK button when settings are completed.

(3) [Transparent] setting

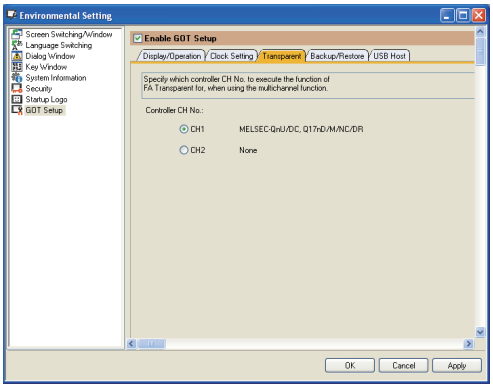

1. Select [Common] → [Environment Setup] → [GOT Setup], check [Enable GOT Setup], and select the [Transparent] menu.
2. 2. After [CH No.] is displayed, check the channel No. connected to the target PLC of multiple GOTs.
   For details of connectable models, refer to the following.
   21. DIRECT CONNECTION TO CPU
   22. COMPUTER LINK CONNECTION

Click the OK button when settings are completed.

■ Setting for the second GOT

Set the communication interface connecting to the first GOT.

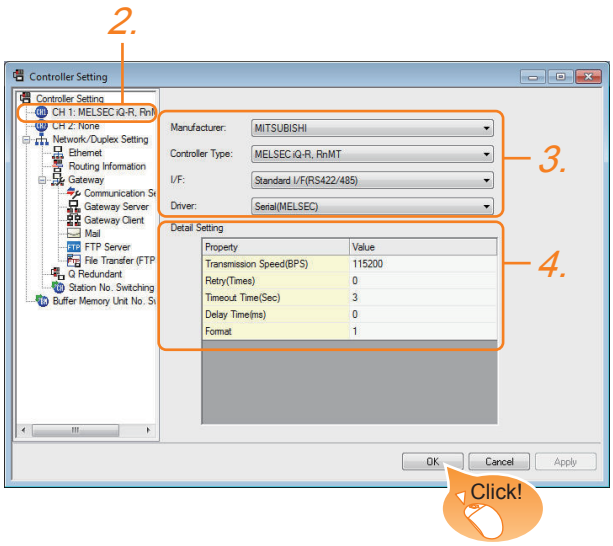

1. Select [Common] → [Controller Setting] from the menu.
2. The Controller Setting window is displayed. Select [CH1] from the list menu.
3. Set the following items.
   - Manufacturer: Mitsubishi
   - Controller Type: Set the same setting as the first GOT (communication interface connecting to the PLC).
   - I/F: Standard I/F (RS422/232)
   - Driver: Set the same setting as the first GOT (communication interface connecting to the PLC).
4. The detailed setting is displayed after Manufacturer, Controller Type, I/F, and Driver are set.
   Set the same setting as the first GOT (communication interface connecting to the PLC).

Click the OK button when settings are completed.

29.4.2 Communication detail settings

Make the settings according to the usage environment.

(1) Serial (MELSEC)

Property	Value
Transmission Speed(BPS)	115200
Retry(Times)	0
Timeout Time(Sec)	3
Delay Time(ms)	0

Item	Description	Range
Transmission Speed	Set this item when change the transmission speed used for communication with the connected equipment. (Default: 115200bps) When the setting exceeds the limit of the connected equipment, communication is performed at the fastest transmission speed supported by the connected equipment	9600bps, 19200bps, 38400bps, 57600bps, 115200bps
Retry	Set the number of retries to be performed when a communication error occurs. (Default: 0time)	0 to 5times
Timeout Time	Set the time period for a communication to time out. (Default: 3sec)	3 to 30sec
Delay Time	Set this item to adjust the transmission timing of the communication request from the GOT. (Default: 0ms)	0 to 300 (ms)

(2) MELSEC-FX

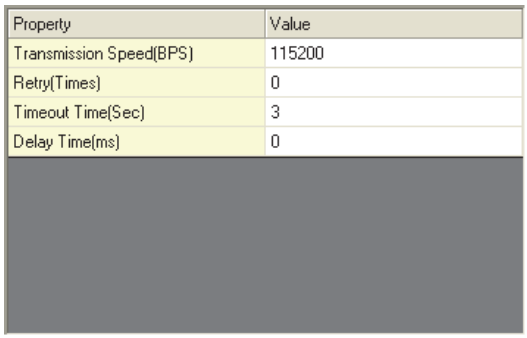

Property	Value
Transmission Speed(BPS)	115200
Retry(Times)	0
Timeout Time(Sec)	3
Delay Time(ms)	0

Item	Description	Range
Transmission Speed	Set this item when change the transmission speed used for communication with the connected equipment. (Default: 115200bps) When the setting exceeds the limit of the connected equipment, communication is performed at the fastest transmission speed supported by the connected equipment	9600bps, 19200bps, 38400bps, 57600bps, 115200bps
Retry	Set the number of retries to be performed when a communication error occurs. (Default: 0time)	0 to 5times
Timeout Time	Set the time period for a communication to time out. (Default: 3sec)	3 to 30sec
Delay Time	Set this item to adjust the transmission timing of the communication request from the GOT. (Default: 0ms)	0 to 300 (ms)

POINT

(1) Communication interface setting by Utility
The communication interface setting can be changed on the Utility's [Communication setting] after writing [Communication Settings] of project data.
For details on the Utility, refer to the following manual.

☞ GT☐ User's Manual

(2) Precedence in communication settings
When settings are made by GT Designer3 or the Utility, the latest setting is effective.

29.5 Precautions

■ GOT's communication timing

(1) GOT's communication timing

Adjust the communication timing so that, after applying the power to the system, the communication with the connected device (MITSUBISHI PLC) is performed in order starting from the first GOT (from the 1st GOT to the 2nd, and so on).
When the communication is failed, retries are performed. And if the predetermined time has elapsed, a communication error occurs.

- If the first GOT is turned on after a while the second GOT is turned on, because the communication start of the second GOT is delayed, a communication error may be detected at the second GOT.
- If the system power is turned on simultaneously and it takes time to start the communication of the second GOT, a communication error may be developed.

(2) Adjusting communication timing

(a) When powering up the system simultaneously
Using the utility or selecting [GOT Setup] - [Opening Screen Time] from GT Designer3, set the opening screen time adding a delay to each setting for the GOTs.
During the opening process, communication with the connected device does not start.

Example: Set value of [Opening Screen Time] (Inside (): set value)

First module (5sec) → Second module (10s)

(b) When powering on devices individually
Turn on the connected device first, and then the first GOT, the second GOT, and so on.

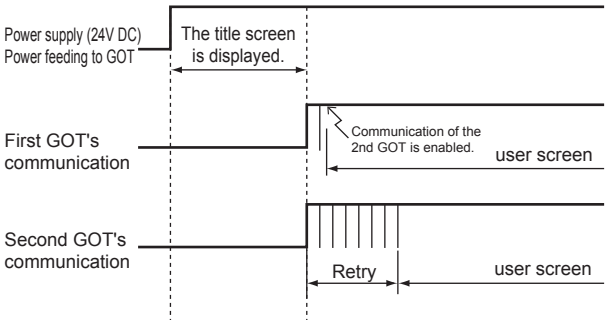

■ Using the FA transparent function

When multiple GOTs are connected, the FA transparent function is not available even if the USB interface is used for the connection.

(When connecting a personal computer to the first GOT, the FA transparent function can be used.)

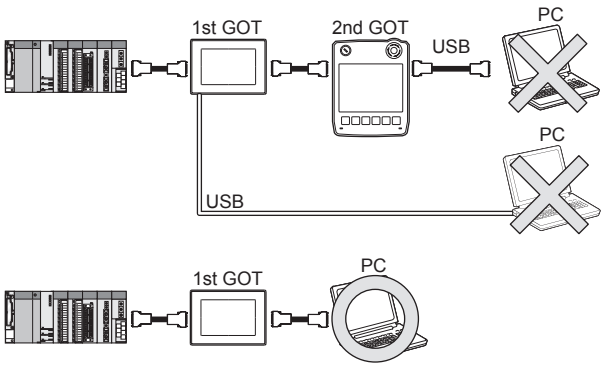

■ Monitoring stop condition for the GOT in the multiple-GT11 connection

In the system where multiple GOTs are connected, performing either of the following monitoring stop operations on the preceding stage (the first GOT) also stops monitoring of the GOT on the next stage (the second GOT).

When the GOT on the preceding stage resumes monitoring, the GOT on the next stage also resumes it.

- When project data or the OS is written/read by GT Designer3*1
- When the GOT is set up*1

*1 A timeout error occurs in GX Developer.

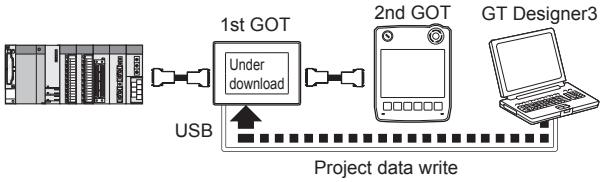

■ When PLC power disconnection occurs in the multiple-GOT connection

In the system where multiple GOTs are connected, when the communication between the PLC and the first GOT is stopped due to PLC power disconnection and a disconnection of the communication cable between the PLC and the first GOT, the GOT waits for timeout against the communication request from the peripheral devices (GX Developer, etc.), and recovery of monitoring between the PLC and the GOT is delayed.

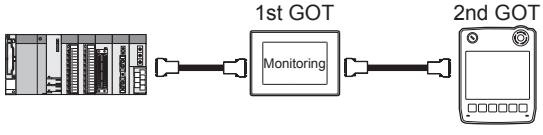

MULTI-CHANNEL FUNCTION

30. MULTI-CHANNEL FUNCTION . . . . . 30 - 1

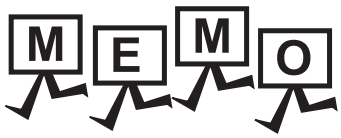
MEMO

30. MULTI-CHANNEL FUNCTION

30.1 What is Multi-channel Function?

The Multi-channel Function is a function to monitor multiple channels of controllers on one GOT by writing multiple communication drivers in the GOT.
The GT14 Handy GOT can monitor up to two channels of controllers on one GOT only when the GOT is used with the Ethernet connection. For the serial connection, the GOT monitors only one channel of controllers on one GOT.
The GT14 Handy GOT cannot be used with the Ethernet connection and the serial connection at the same time.

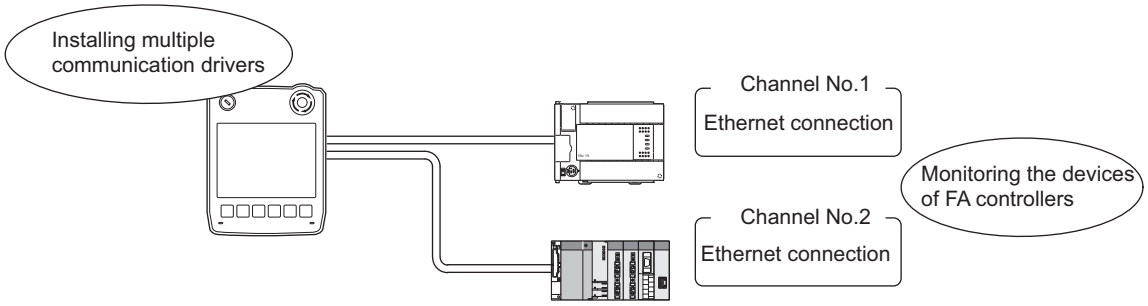

POINT

(1) Before using the multi-channel function
This manual describes the procedure to use the multi-channel function, based on the following system configuration example.

30.2 System Configuration

(2) System configuration when the multi-channel function is used
The system configuration between GOT and the controllers is the same as that of when not using the multi-channel function.
For the system configuration between GOT and the controllers, refer to the following.

Each chapter indicating the system configuration

■ Features of the multi-channel function

(1) With a single unit of GOT, the system consisting of multiple controllers can be configured.
The system consisting of multiple controllers can be easily established with a single unit of GOT.
In addition, each system can be monitored on the GOT screen, and the unified management of the information is possible.

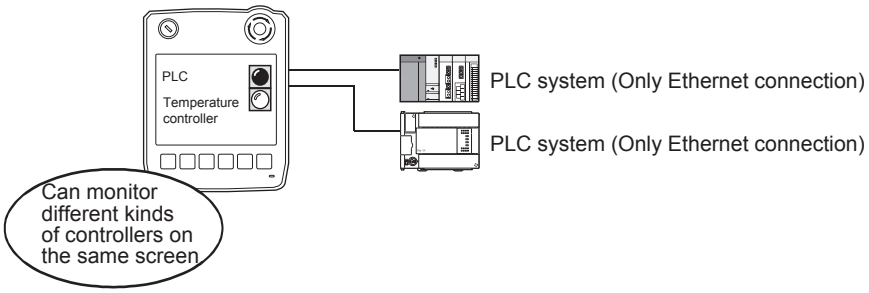

30.2 System Configuration

Multiple Ethernet connections can be made with one GOT.

■ System configuration

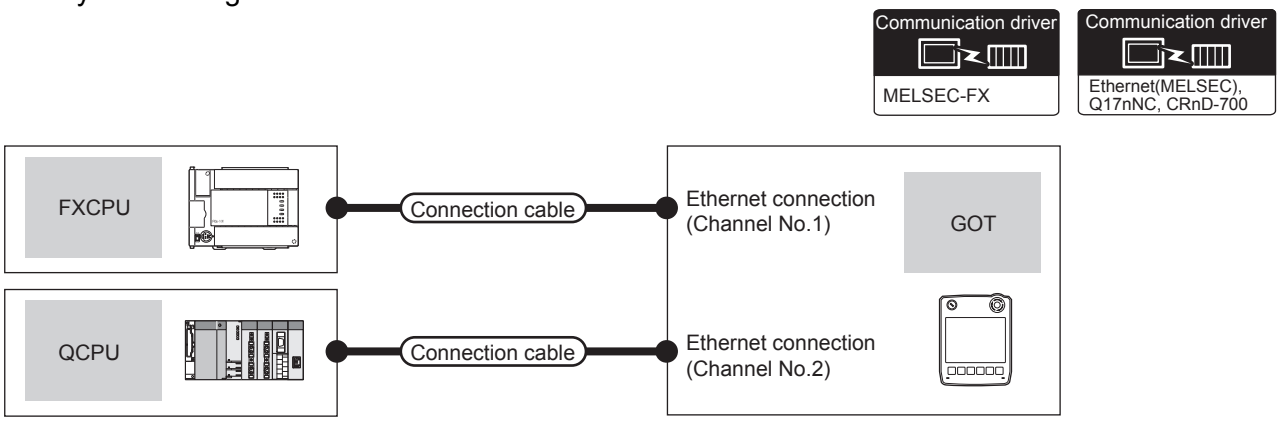

PLC	Connection type	Connection cable	GOT		Number of connectable equipment
			Channel No.	Model	
FXCPU	Ethernet	For the system configuration between GOT and the controllers, refer to the following. Each chapter indicating the system configuration	1	GT14 Handy	2 controllers for 1 GOT (2 channels)
QCPU			2		

30.3 GOT Side Settings

A general flow of operation from system selection for the multi-channel function to drawing is explained in 30.3.1 to 30.3.5.
It is recommended to refer to 30.3.1 to 30.3.5 when making necessary settings using the multi-channel function for the first time.

30.3.1 General flow from system selection to drawing

System selection for using the multi-channel function is explained below.
Make selection and setting for the multi-channel function by following the order shown below.

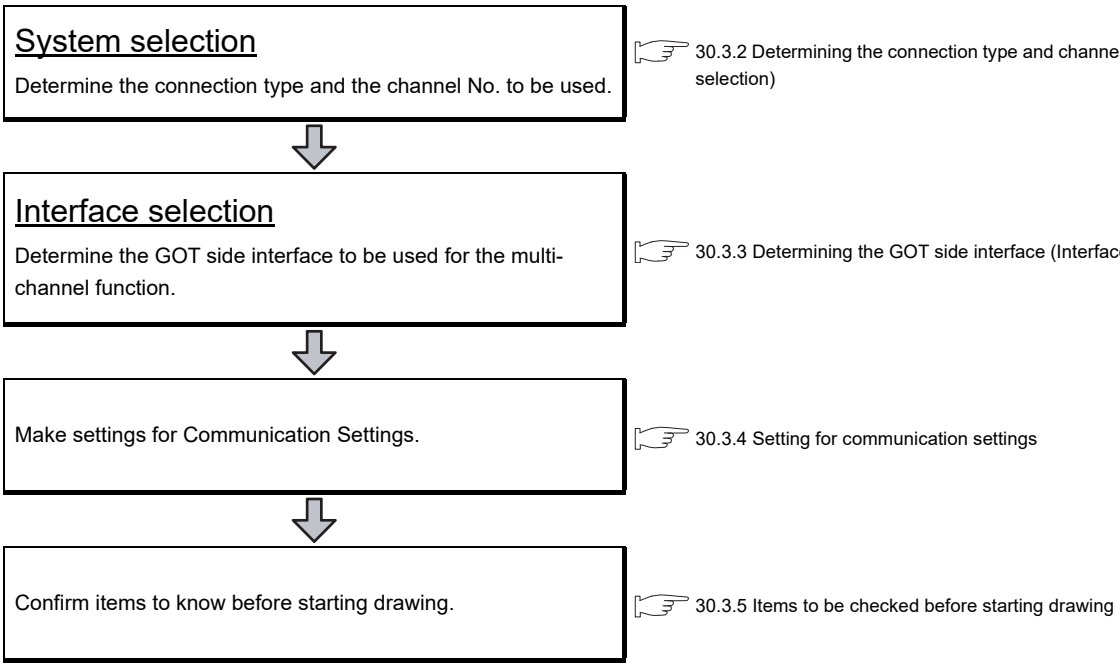

30.3.2 Determining the connection type and channel No. (System selection)

■ Determining the connection type

The combinations of the Ethernet connections are available as shown in the following table.

Ethernet connection
• Ethernet connection
• Third party PLC connection (Ethernet connection)
• MODBUS®/TCP connection
• Robot controller connection
• CNC connection (Ethernet connection)

The following shows the applicable combinations of connection types and the number of channels.

Allowable combination of connection types	Number of channels
• Ethernet connection: 2 channels	Max. 2 channels

■ Determining the channel No.

After determining the connection type to be used, determine the channel Nos. (CH No. 1 to CH No. 2) to be used for the respective connection types.

There are no special cautions to be attended to for determining channel Nos.

Set the channel No. by selecting [Common] → [Controller Setting] from the menu in GT Designer3.

☞ 18. DRAWING SOFTWARE SETTINGS (CONTROLLER SETTING AND COMMON SETTINGS)

Write Check Sheet

☞ 30.5 Multi-channel function check sheet

Write down the following items selected in this section to the check sheet.

① Selection of connection type
Write down the name of connection type to be used.

■ Check sheet No.1 (selection of connection type and interface)

Channel No. of controller (CH No.1 to 2)

CH No.	① Selection of connection type (☞ 30.3.2)	② Interface selection (☞ 30.3.3)
1	Connection name FXCPU Ethernet connection	
2	Connection name QCPU Ethernet connection	

30.3.3 Determining the GOT side interface (Interface selection)

Use the Ethernet interface built in the GOT.

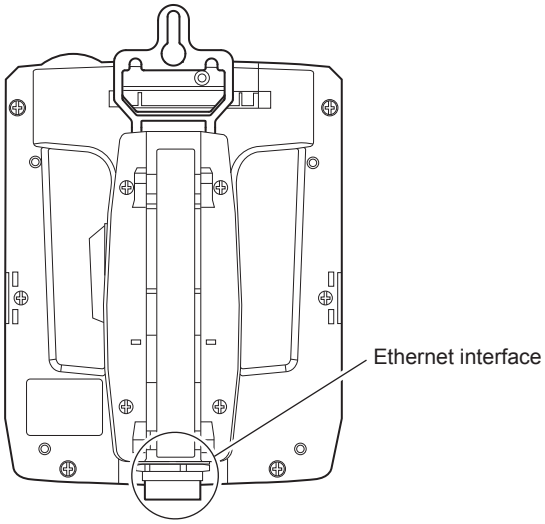

For the connection via the connection type selected in 30.3.2, select interfaces to be used.
Select the interfaces according to the connection type by referring to the following.

Selected connection type	Reference for required interface and communication unit
• Ethernet connection	This section ■ GOT interface used for Ethernet connection
• Third party PLC connection (Ethernet connection)	
• MODBUS®/TCP connection	
• Robot controller connection	
• CNC connection (Ethernet connection)	

■ GOT interface used for Ethernet connection

For the Ethernet connection, use the following interface built in the GOT.

Type	Interface built in GOT
Interface built in GOT	Ethernet interface*1

*1 Up to two channels can be used.

POINT

When using Ethernet download and gateway function

The Ethernet download and the gateway function are available with the Ethernet interface built in the GOT (one channel).

Refer to the explanation below to check if the number of channels for the multi-channel function to be used is restricted or not. If it is restricted, review the system configuration.

Write Check Sheet

30.5 Multi-channel function check sheet

Write down the following items selected in this section to the check sheet.

② Interface selection

Write down the name of the interface used with each type of connection.

■ Check sheet No.1 (selection of connection type and interface)

Channel No. of controller (CH No.1 to 2)

CH No.	① Selection of connection type (30.3.2)	② Interface selection (30.3.3)
1	Connection name FXCPU Ethernet connection	Ethernet interface
2	Connection name QCPU Ethernet connection	Ethernet interface

(Continued to next page)

Write Check Sheet

Write down the following items to the check sheet.

◇3

30.5 Multi-channel function check sheet

1. After writing down the names of communication units, write down the CH No. to be assigned to each communication interface, based on the entry in ■ Check Sheet No. 1 (selection of connection type and interface).

■ Check sheet No.1 (selection of connection type and interface)

Channel No. of controller (CH No.1 to 2)

CH No.	◇Selection of connection type (☞30.3.2)	◇Interface selection (☞30.3.3)
1	Connection name FXCPU Ethernet connection	Ethernet interface
2	Connection name QCPU Ethernet connection	Ethernet interface

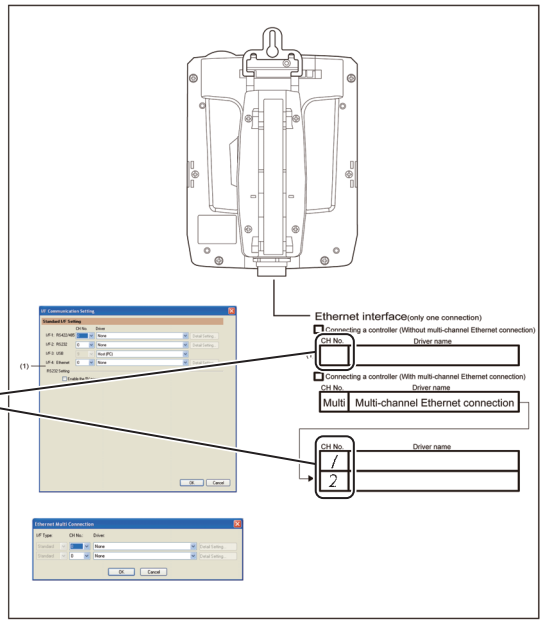

2. After writing down CH No., write down the communication driver name for each connection type. For the communication drivers used for the respective connection types, refer to the following.

Chapters of each respective connection type

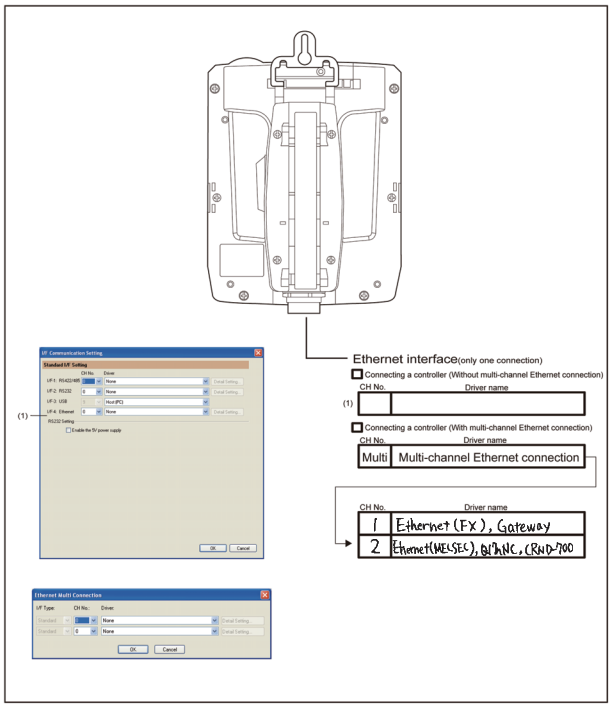

30.3.4 Setting for communication settings

Make the communication settings in the interface to be used.

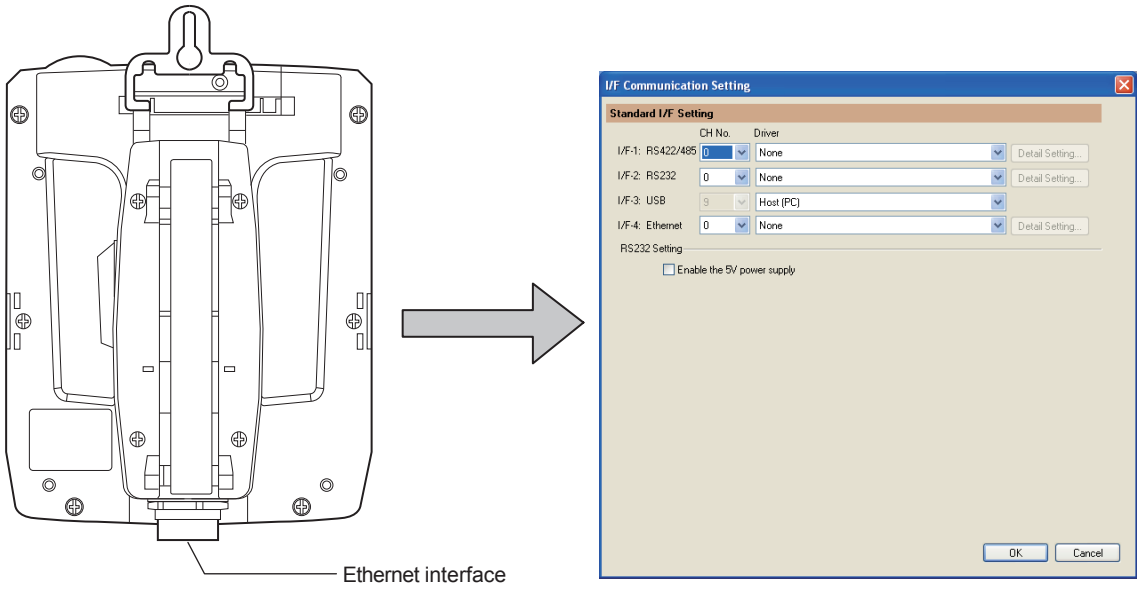

Check

30.5 Multi-channel function check sheet

Make settings for Communication Settings by GT Designer3 referring to the check sheet where the necessary information has been written.
The position that the settings should be made on the communication settings screen are specified on the check sheet by numbers.

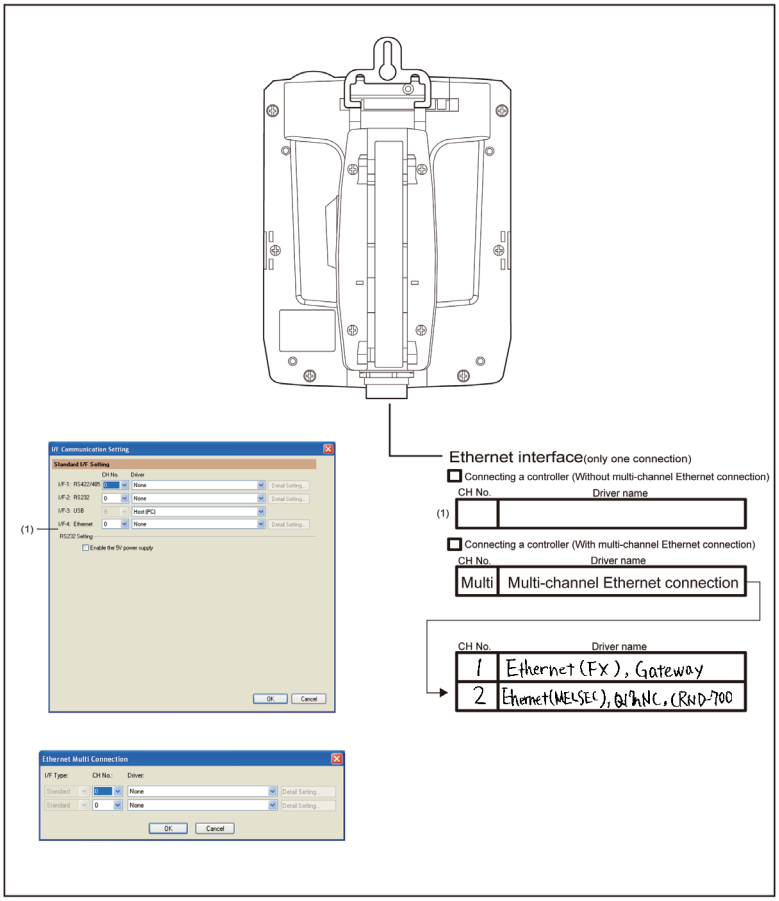

This completes the setting for Communication Settings.
Create a screen with GT Designer3.

30.3.5 Items to be checked before starting drawing

The following describes that should be understood before starting drawing and the functions that should be set beforehand when using the multi-channel function.

■ Device settings

It is necessary to set the device to be used together with the CH No.

GT Designer3 Version1 Screen Design Manual

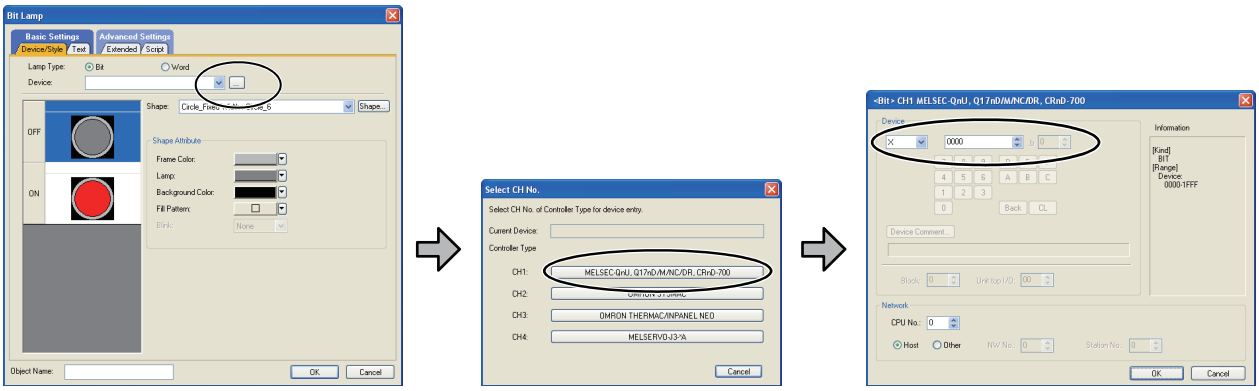

1. Click the device setting button.
2. Click the controller to be set.
3. Set the device.

■ Accessible range for monitoring

The accessible range for monitoring is not changed even when the multi-channel function is used.

GOT1000 Series Connection Manual for GT Works3

■ Clock function

Set the controller for which adjust/broadcast should be executed by the CH No.

GT Designer3 Version1 Screen Design Manual

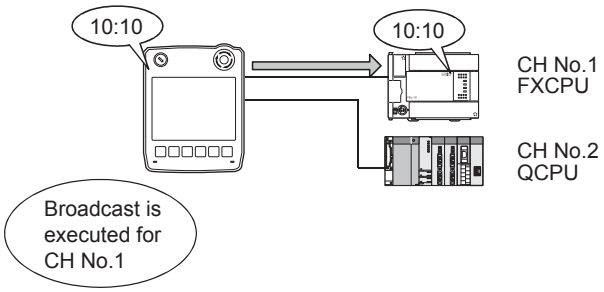

■ FA transparent function

Set the controller for which the FA transparent function should be executed by the CH No.

☞ 31.5.1 Setting communication interface

The set CH No. can be changed by the Utility.
To execute the FA transparent function for other CH No., change the CH No. using the Utility.

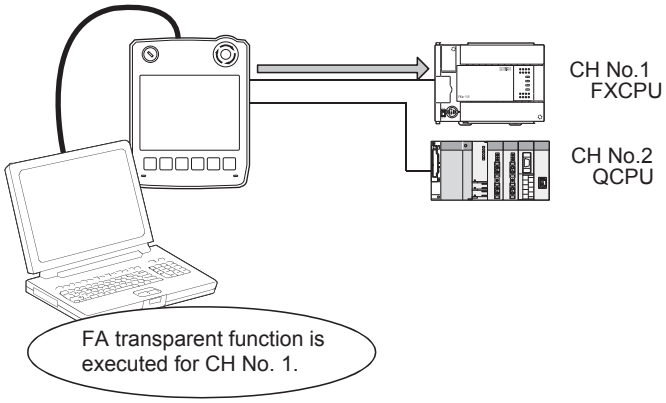

■ Station No. switching function

Set the controller for which the station No. switching function should be executed by the CH No.

☞ GT Designer3 Version1 Screen Design Manual

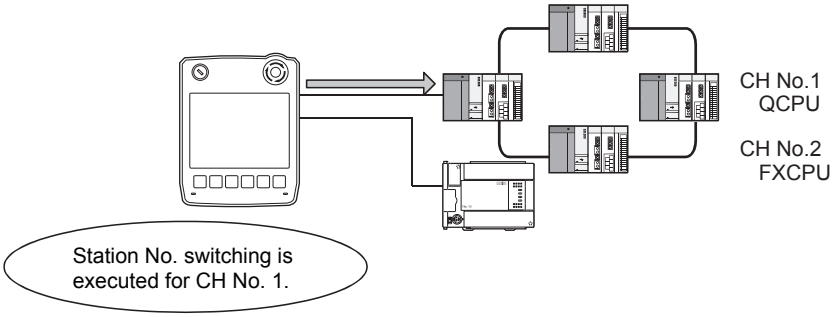

30.4 Precautions

30.4.1 Precautions for use

■ Occurrence of the same system alarm at different channels

When the advanced system alarm is used, if the system alarms with the same error code occur in different channels the GOT treats the alarms as the same system alarm.
Therefore, if the system alarms with the same error code occur one by one, the time of later system alarm occurrence is not reflected to the GOT.

■ Confirmation of the channel No. at which a system alarm occurred

When a system alarm occurred, confirm the channel No. where the alarm occurred, using the procedure indicated below.

(1) Check by [System alarm display] of the utility.

☞ 15.3 System Alarm Display

(2) Monitor the internal devices of the GOT.

☞ GT Designer3 Version1 Screen Design Manual

30.5 Multi-channel function check sheet

This section provides the check sheet to be used for Communication Settings when the multi-channel function is used.

30.3.2 to 30.3.4 contain explanations of the items to be checked on the check sheet.
Checking items explained in these sections using the check sheet on the following page allows you to complete the setting for the multi-channel function.

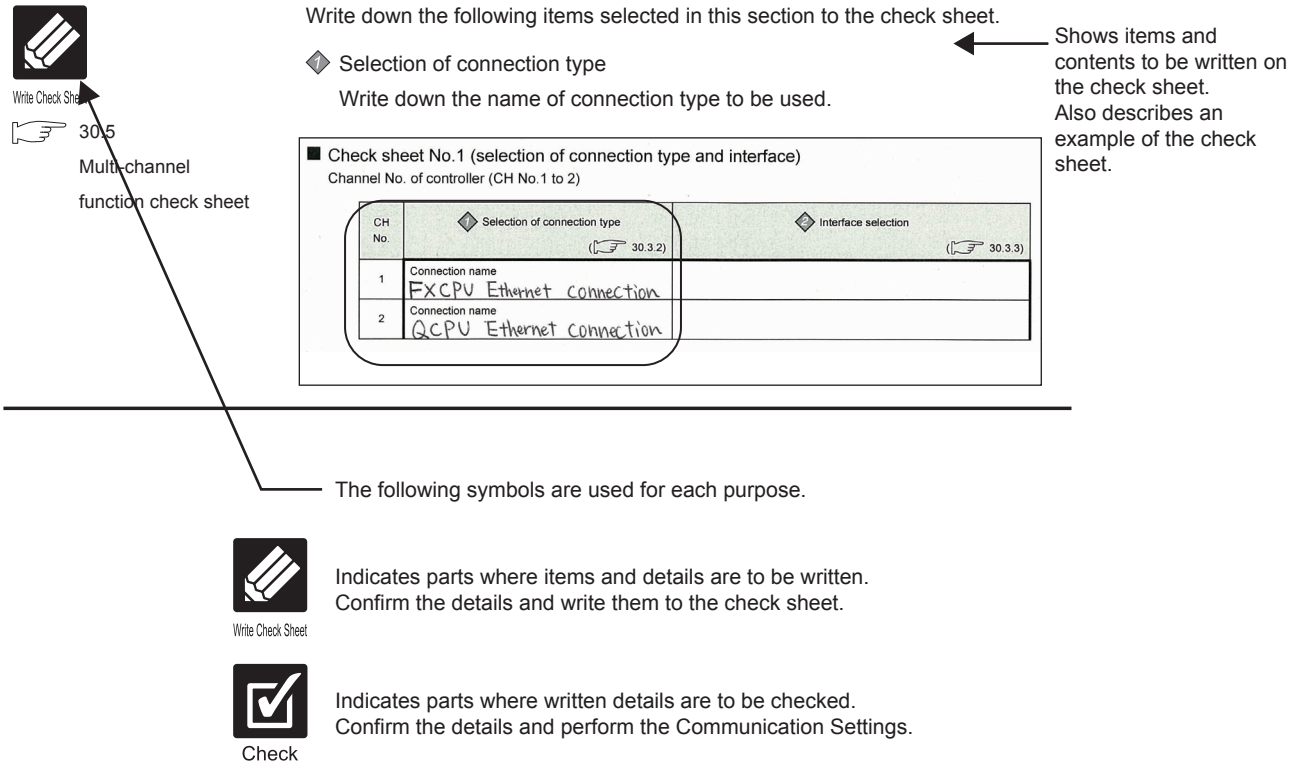

■ Check sheet No.1 (selection of connection type and interface)

Channel No. of controller (CH No.1 to 2)

CH No.	① Selection of connection type (☞ 30.3.2)	② Interface selection (☞ 30.3.3)
1	Connection name	
2	Connection name	

■ Check sheet No. 2 (selection of GOT side interface)

③ Assigning the channel No.

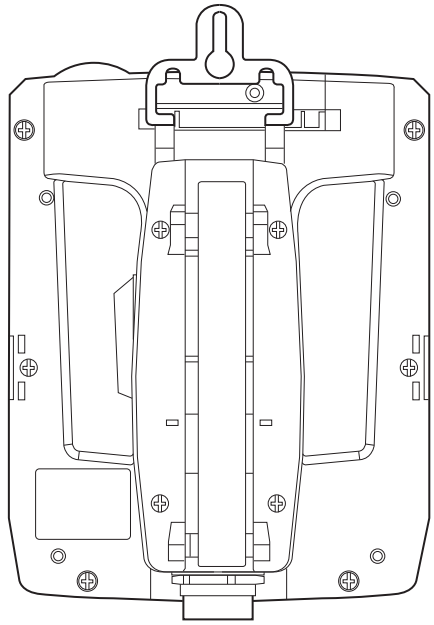

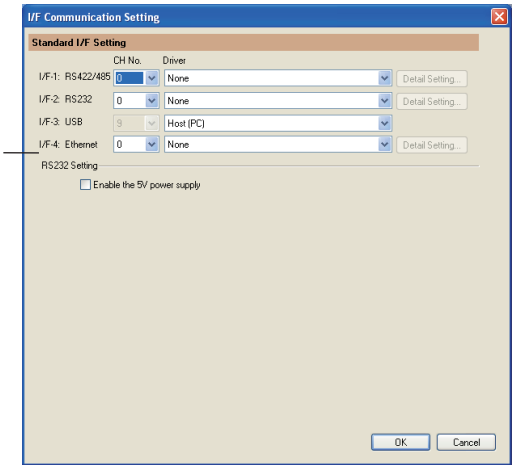

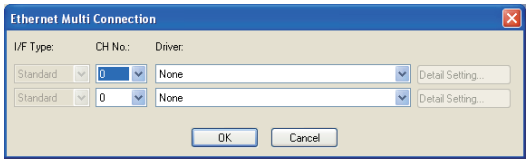

Ethernet interface(only one connection)

☐ Connecting a controller (Without multi-channel Ethernet connection)

(1)

CH No.	Driver name

☐ Connecting a controller (With multi-channel Ethernet connection)

CH No.	Driver name
Multi	Multi-channel Ethernet connection

CH No.	Driver name

FA TRANSPARENT FUNCTION

31. FA TRANSPARENT FUNCTION . . . . . 31 - 1

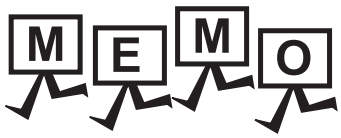
MEMO

31. FA TRANSPARENT FUNCTION

31.1 FA Transparent Function

The FA transparent function allows the sequence programs of the Mitsubishi PLC to be read, written and monitored from a PC connected via a GOT.

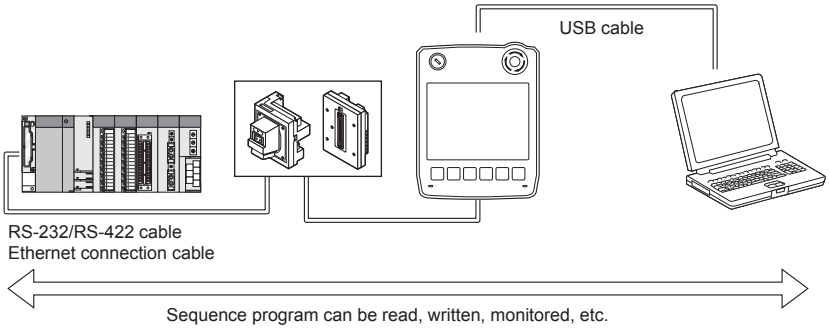

POINT

The USB cable that connects the Handy GOT and the PC is connected to the USB interface (device) in the interface environmental protection cover of the Handy GOT. Since the Handy GOT is used with the interface environment protection cover opened, it is out of the warranty for protective structure (IP65f).

31.2 Compatible Software

The following shows the software compatible with the FA transparent function.

POINT

(1) The range accessible by software when FA transparent function is used
Use of the FA transparent function does not affect the range accessible by the software.
For details on accessible range, refer to the manual for the respective software.

(2) The software settings when using FA transparent function
For the software settings, refer to the following when using FA transparent function.

- 31.6.1 Accessing by GX Works3
- 31.6.2 Accessing by CW Configurator
- 31.6.3 Accessing the PLC by GX Developer, PX Developer, or GX Configurator
- 31.6.4 Accessing by GX Works2
- 31.6.5 Accessing by GX LogViewer
- 31.6.6 Accessing PLC by FX GX Configurator-QP
- 31.6.7 Accessing by the MT Developer
- 31.6.8 Accessing by MT Works2
- 31.6.9 Accessing the servo amplifier by the MR Configurator
- 31.6.10 Accessing the servo amplifier by the MR Configurator2
- 31.6.11 Accessing the inverter by the FR Configurator
- 31.6.12 Accessing PLC by FX Configurator-FP
- 31.6.13 Accessing by FX3U-ENET-L Configuration tool
- 31.6.14 Accessing by RT ToolBox2
- 31.6.15 Accessing by NC Configurator
- 31.6.16 Accessing by MELSOFT Navigator
- 31.6.17 Accessing by the CPU Module Logging Configuration Tool
- 31.6.18 Accessing by Setting/Monitoring tool for C Controller module

■ When connecting the GOT and PC with USB

(1) Connecting the GOT and PLC in direct CPU connection
The following shows the software and the accessible PLC CPUs.

PLC CPU	Software
FX5U, FX5UC	GX Works3[*26], MX Component[*27], MX Sheet[*28]
QCPU (Q mode)	MELSOFT Navigator[*12] GX Developer[*1], GX Works2[*11], PX Developer[*5] GX Configurator[*6]-AD/DA/SC/CT/TI/TC/AS/FL/PT GX Configurator-QP[*9], MX Component[*17], MX Sheet[*18]
LCPU[*15]	MELSOFT Navigator[*16] GX Developer[*13], GX Works2[*14], GX LogViewer MX Component[*17], MX Sheet[*18], CPU Module Logging Configuration Tool.[*20]
QCPU (A mode), QnA/ACPU, Motion controller CPU (A Series)	GX Developer[*1] MX Component[*17], MX Sheet[*18]
FXCPU	MELSOFT Navigator[*12] GX Developer[*1], GX Works2[*11] FX Configurator-FP[*7] FX3U-ENET-L Configuration tool MX Component[*17], MX Sheet[*18]
Motion controller CPU (Q Series)	MELSOFT Navigator[*12] MT Developer[*2] SW6RN-GSV13P, SW6RN-GSV22P, SW6RN-GSV43P, SW6RN-GSV54P, SW6RN-DOSCP, SW6RN-SNETP (for user API) MT Works2[*10], MX Component[*23], MX Sheet[*24]
FREQROL A700/F700/E700/D700 Series	FR Configurator[*4]
Sensorless Servo (FREQROL E700EX)	FR Configurator[*25]
Robot controller (CRnQ-700)	RT ToolBox2[*8]
MELSERVO (MR-J3-B)[*22]	MR Configurator[*3], MR Configurator2[*19]
MELSERVO (MR-J4-B)[*22]	MR Configurator2[*21]

*1 GX Developer Version 8.22Y or later is required to use the FA transparent function.
GX Developer Version 8.68W or later is required to use the FA transparent function when connecting the QnUDE(H)CPU to the GOT.
*2 MT Developer (SW6RNC-GSVE) Version 00N or later is required to use the FA transparent function.
*3 MR Configurator (MRZJW3-SETUP221E) Version B1 or later is required to use the FA transparent function.
*4 FR Configurator (FR-SW2-SETUP-WJ) Ver.1.02 or later is required to use the FA transparent function when connecting the A700/F700 series to the GOT.
FR Configurator (FR-SW3-SETUP-WJ) Ver.2.00 or later is required to use the FA transparent function when connecting the E700 series to the GOT.
FR Configurator (FR-SW3-SETUP-WJ) Ver.3.10 or later is required to use the FA transparent function when connecting the D700 series to the GOT.
*5 PX Developer Version 1.09K or later is required to use the FA transparent function.
PX Developer Version 1.18U or later is required to use the FA transparent function when connecting the Q02PHCPU or Q06PHCPU to the GOT.
*6 Use GX Developer Version 8.30G or later combined with the following GX Configurator version or later to use the FA transparent function.
GX Configurator-AD: Version 2.03D or later, GX Configurator-DA: Version 2.04E or later
GX Configurator-SC: Version 2.10L or later, GX Configurator-CT: Version 1.23Z or later
GX Configurator-TI: Version 1.22Y or later, GX Configurator-TC: Version 1.21X or later
GX Configurator-AS: Version 1.20W or later, GX Configurator-FL: Version 1.21X or later
GX Configurator-PT: Version 1.20W or later
*7 FX Configurator-FP Version 1.30 or later is required to use the FA transparent function.
*8 RT ToolBox2 Version 1.1 or later is required to use the FA transparent function.
*9 GX Configurator-QP Version2.32J or later is required to use the FA transparent function.
*10 MT Works2 Version 1.00A or later is required to use the FA transparent function.
*11 GX Works2 Version 1.03D or later is required to use the FA transparent function.
*12 MELSOFT Navigator Version 1.04E or later is required to use the FA transparent function.
*13 GX Developer Version 8.88S or later is required to use the FA transparent function.
*14 GX Works2 Version 1.11M or later is required to use the FA transparent function.
*15 The adapter (L6ADP-R2 or L6ADP-R4) is required.
*16 MELSOFT Navigator Version 1.07H or later is required to use the FA transparent function.
*17 MX Component Version 3.14Q or later is required to use the FA transparent function.
*18 Use MX Component Version 4.03D or later for MX Sheet.
*19 Start MR Configurator2 from MT Developer2 Version 1.10L or later.

*20 CPU Module Logging Configuration Tool Version 1.04E or later is required to use the FA transparent function.
*21 MR Configurator2 Version 1.09K or later is required to use the FA transparent function.
*22 A motion controller is required between the GOT and PLC in direct CPU connection.
*23 MX Component Version 4.00A or later is required to use the FA transparent function.
*24 MX Component Version 4.00A or later is required for MX Sheet to use the FA transparent function.
*25 FR Configurator Version5.21 or later is required to use the FA transparent function.
*26 GX Works3 Version 1.005F or later is required to use the FA transparent function.
*27 MX Component Version 4.11M or later is required to use the FA transparent function.
*28 MX Sheet, please use the MX Component (Version 4.11M or later).

(2) When connecting the GOT and PLC in computer link connection

The following shows the software and the accessible PLC CPUs.

PLC CPU	Software
RCPU	GX Works3, MX Component*15, MX Sheet*16
Motion controller CPU (MELSEC iQ-R Series)	MT Works2*14, MX Component*15, MX Sheet*16
QCPU (Q mode)	MELSOFT Navigator*5 GX Developer*1, GX Works2*4 PX Developer*2 GX Configurator-QP*3 MX Component*9, MX Sheet*10
LCPU	MELSOFT Navigator*8 GX Developer*6 GX Works2*7 GX LogViewer MX Component*9, MX Sheet*10, CPU Module Logging Configuration Tool.*11
Motion controller CPU (Q Series)	MX Component*12, MX Sheet*13

*1 GX Developer Version 8.62Q or later is required to use the FA transparent function.
GX Developer Version 8.68W or later is required to use the FA transparent function when connecting the QnUDE(H)CPU to the GOT.
*2 PX Developer Version 1.18U or later is required to use the FA transparent function.
*3 GX Configurator-QP Version2.32J or later is required to use the FA transparent function.
*4 GX Works2 Version 1.03D or later is required to use the FA transparent function.
*5 MELSOFT Navigator Version 1.04E or later is required to use the FA transparent function.
*6 GX Developer Version 8.88S or later is required to use the FA transparent function.
*7 GX Works2 Version 1.11M or later is required to use the FA transparent function.
*8 MELSOFT Navigator Version 1.07H or later is required to use the FA transparent function.
*9 MX Component Version 4.03D or later is required to use the FA transparent function.
*10 Use MX Component Version 3.14Q or later for MX Sheet.
*11 CPU Module Logging Configuration Tool Version 1.04E or later is required to use the FA transparent function.
*12 MX Component Version 4.00A or later is required to use the FA transparent function.
*13 MX Component Version 4.00A or later is required for MX Sheet to use the FA transparent function.
*14 MT Works2 Version 1.100E or later is required to use the FA transparent function.
*15 MX Component Version 4.06G or later is required to use the FA transparent function.
*16 Use MX Component Version 4.06G or later for MX Sheet.

(3) When connecting the GOT and PLC in Ethernet communication
The following shows the software and the accessible PLC CPUs.

PLC CPU	Software
RCPU	GX Works3, MX Component*21, MX Sheet*22
Motion controller CPU (MELSEC iQ-R Series)	MT Works2*20, MX Component*21, MX Sheet*22
C Controller module (MELSEC iQ-R Series)	CW Configurator
FX5U, FX5UC	GX Works3*23, MX Component*24, MX Sheet*25
QCPU (Q mode)*1, C Controller module (Q Series)	MELSOFT Navigator*6 GX Developer*2 GX Works2*3 *13 MX Component*11, MX Sheet*12 Setting/Monitoring tool for C Controller module*20
LCPU	MELSOFT Navigator*10 GX Developer*7, GX Works2*8 GX LogViewer MX Component*11, MX Sheet*12, CPU Module Logging Configuration Tool.*14
FXCPU	GX Works2*19
QCPU (A mode), QnA/ACPU*1	GX Developer*2 MX Component*11, MX Sheet*12
Motion controller CPU (Q Series)	MELSOFT Navigator*6 MT Works2*4*9
CNC CPU (Q173NCCPU)	NC Configurator*5
Robot controller (CRnQ-700, CRnD-700)	RT ToolBox2*15
MELSERVO (MR-J3-B)*17	MR Configurator2
MELSERVO (MR-J4-B)*17	MR Configurator2*16

*1 Only QCPU can be connected. To connect to QnA/ACPU, connect via QCPU.
*2 GX Developer Version 8.78G or later is required to use the FA transparent function.
*3 GX Works2 Version 1.10L or later is required to use the FA transparent function.
*4 MT Works2 Version 1.08J or later is required to use the FA transparent function.
*5 NC Configurator Version A1 or later is required to use the FA transparent function.
*6 MELSOFT Navigator Version 1.04E or later is required to use the FA transparent function.
*7 GX Developer Version 8.88S or later is required to use the FA transparent function.
*8 GX Works2 Version 1.11M or later is required to use the FA transparent function.
*9 MT Works2 Version 1.12N or later is required to connect with Q17nDCPU-S1.
*10 MELSOFT Navigator Version 1.07H or later is required to use the FA transparent function.
*11 MX Component Version 4.03D or later is required to use the FA transparent function.
*12 Use MX Component Version 3.14Q or later for MX Sheet.
*13 GX Works2 Version 1.34L or later is required to execute the FA transparent function with using CC-Link IE field network Ethernet adapter (NZ2GF-ETB).
C controller module (Q Series) does not support CC-Link IE field network.
*14 CPU Module Logging Configuration Tool Version 4.04E or later is required to use the FA transparent function.
*15 RT ToolBox2 Version 1.7 or later is required to use the FA transparent function.
*16 MR Configurator2 Version 1.09K or later is required to use the FA transparent function.
*17 A motion controller is required between the GOT and PLC in Ethernet connection.
*18 Setting/Monitoring tool for C Controller module Version 4.00A or later is required to use the FA transparent function.
*19 GX Works2 Version 1.98C or later is required to use the FA transparent function.
*20 MT Works2 Version 1.100E or later is required to use the FA transparent function.
*21 MX Component Version 4.06G or later is required to use the FA transparent function.
*22 Use MX Component Version 4.06G or later for MX Sheet.
*23 GX Works3 Version 1.005F or later is required to use the FA transparent function.
*24 MX Component Version 4.11M or later is required to use the FA transparent function.
*25 MX Sheet, please use the MX Component (Version 4.11M or later).

31.3 List of Models that Can Be Monitored

The following models support FA transparent function.

■ When connecting the GOT and PC with USB

Series	Model	Target software	Connection type		
			Direct CPU connection	Computer link connection	Ethernet connection
MELSEC iQ-R Series	R04CPU	GX Works3 MX Component MX Sheet	×	○	○
	R08CPU				
	R16CPU				
	R32CPU				
	R120CPU				
	R08PCPU				
	R16PCPU				
	R32PCPU				
	R120PCPU				
	R04ENCPU*1				
	R08ENCPU*1				
	R16ENCPU*1				
	R32ENCPU*1				
	R120ENCPU*1				
	R08SFCPU*1				
	R16SFCPU*1				
	R32SFCPU*1				
	R120SFCPU*1				
Motion controller CPU (MELSEC iQ-R Series)	R16MTCPU	MT Works2 MX Component MX Sheet	×	○	○
	R32MTCPU				
C Controller module (MELSEC iQ-R Series)	R12CCPU-V	CW Configurator	×	×	○
MELSEC iQ-F Series	FX5U*1 FX5UC*1	GX Works3	○	×	○

(Continued to next page)

*1 MX Component Version 4.11M or later is required to use the FA transparent function.
MX Sheet, please use the MX Component (Version 4.11M or later).

Series	Model	Target software	Connection type		
			Direct CPU connection	Computer link connection	Ethernet connection
MELSEC-Q (Q mode)	Q00JCPU	GX Developer, GX Works2, GX Configurator, PX Developer, MX Component, MX Sheet	○	○	○
	Q00CPU				
	Q01CPU				
	Q02CPU				
	Q02HCPU, Q06HCPU, Q12HCPU, Q25HCPU				
	Q02PHCPU, Q06PHCPU, Q12PHCPU, Q25PHCPU				
	Q12PRHCPU (Main base), Q25PRHCPU (Main base), Q12PRHCPU (Extension base), Q25PRHCPU (Extension base)		×	×	×
	Q00UJCPU		○	○	○
	Q00UCPU				
	Q01UCPU				
	Q02UCPU				
	Q03UDCPU				
	Q04UDHCPU, Q06UDHCPU, Q10UDHCPU, Q13UDHCPU, Q20UDHCPU, Q26UDHCPU				
	Q03UDECPU, Q04UDEHCPU, Q06UDEHCPU, Q10UDEHCPU, Q13UDEHCPU, Q20UDEHCPU, Q26UDEHCPU, Q50UDEHCPU, Q100UDEHCPU		○*1		
	Q03UDVCPU*3, Q04UDVCPU*3, Q06UDVCPU*3, Q13UDVCPU*3, Q26UDVCPU*3				
C Controller module (Q Series)	Q12DCCPU-V, Q24DHCCPU-V/VG, Q24DHCCPU-LS, Q26DHCCPU-LS		×	×	○*2
	Q24DHCCPU-V/VG, Q24DHCCPU-LS, Q26DHCCPU-LS	Setting/Monitoring tool for C Controller module	×	×	○

(Continued to next page)

*1 Use the serial port of QCPU in the multiple CPU system since QnUDEHCPU, Q12DCCPU-V, and Q24DHCCPU-V/VG have no direct coupled I/F.

*2 When using Q12DCCPU-V1 or Q24DHCCPU-V/VG as the connected CPU, only MX Component can be used. When accessing other CPUs relaying Q12DCCPU-V or Q24DHCCPU-V/VG GX Developer or GX Works2 can also be used.

*3 MX Component Version 4.11M or later is required to use the FA transparent function.
MX Sheet, please use the MX Component (Version 4.11M or later).

Series	Model	Target software	Connection type		
			Direct CPU connection	Computer link connection	Ethernet connection
MELSEC-QS	QS001CPU	-	×	×	×
MELSEC-L	L02CPU	GX Developer GX Works2 GX LogViewer MX Component MX Sheet CPU Module Logging Configuration Tool	○	○	○
	L06CPU				
	L26CPU				
	L06CPU-P				
	L26CPU-P				
	L26CPU-BT				
	L02CPU-P				
	L26CPU-PBT				
	L02SCPU				
	L02SCPU-P				
MELSEC-Q (A mode)	Q02CPU-A	GX Developer MX Component MX Sheet	○	×	×
	Q02HCPU-A				
	Q06HCPU-A				
MELSEC-QnA (QnACPU)	Q2ACPU	GX Developer MX Component MX Sheet	○	×	×
	Q2ACPU-S1				
	Q3ACPU				
	Q4ACPU				
	Q4ARCPU				
MELSEC-QnA (QnASCPU)	Q2ASCPU	GX Developer MX Component MX Sheet	○	×	×
	Q2ASCPU-S1				
	Q2ASHCPU				
	Q2ASHCPU-S1				
MELSEC-A (AnCPU)	A2UCPU	GX Developer MX Component MX Sheet	○	×	×
	A2UCPU-S1				
	A3UCPU				
	A4UCPU				
	A2ACPU				
	A2ACPUP21				
	A2ACPUR21				
	A2ACPU-S1				
	A2ACPUP21-S1				
	A2ACPUR21-S1				
	A3ACPU				
	A3ACPUP21				
	A3ACPUR21				
	A1NCPU				
	A1NCPUP21				
	A1NCPUR21				
	A2NCPU				
	A2NCPUP21				
	A2NCPUR21				
	A2NCPU-S1				
	A2NCPUP21-S1				
	A2NCPUR21-S1				
	A3NCPU				
	A3NCPUP21				
	A3NCPUR21				
MELSEC-A (AnSCPU)	A2USCPU	GX Developer MX Component MX Sheet	○	×	×
	A2USCPU-S1				

(Continued to next page)

Series	Model	Target software	Connection type		
			Direct CPU connection	Computer link connection	Ethernet connection
MELSEC-A (AnSCPU)	A2USHCPU-S1	GX Developer MX Component MX Sheet	○	×	×
	A1SCPU				
	A1SCPUC24-R2				
	A1SHCPU				
	A2SCPU*1				
	A2SHCPU				
	A1SJCPU				
	A1SJCPU-S3				
	A1SJHCPU				
MELSEC-A	A0J2HCPU	GX Developer MX Component MX Sheet	○	×	×
	A0J2HCPUP21				
	A0J2HCPUR21				
	A0J2HCPU-DC24				
	A2CCPU				
	A2CCPUP21				
	A2CCPUR21				
	A2CCPUC24				
	A2CCPUC24-PRF				
	A2CJCPU-S3				
	A1FXCPU				
Motion controller CPU (Q Series)	Q172CPU	MT Developer	○	×	×
	Q173CPU				
	Q172CPUN				
	Q173CPUN				
	Q172HCPU	MT Developer MR Configurator	○*1		
	Q173HCPU				
	Q172DCPU	MT Works2	○*2	×	○
	Q173DCPU				
	Q172DCPU-S1				
	Q173DCPU-S1				
	Q172DSCPU				
	Q173DSCPU				
	Q170MCPU	MT Works2 GX Developer GX Works2	○	×	○
	Q170MSCPU				
	Q170MSCPU-S1				
Motion controller CPU (A Series)	A273UCPU	GX Developer MX Component MX Sheet	○	×	×
	A273UHCPU				
	A273UHCPU-S3				
	A373UCPU				
	A373UCPU-S3				
	A171SCPU				
	A171SCPU-S3				

(Continued to next page)

*1 Use the serial port of QCPU in the multiple CPU system since only the USB port is available as the direct coupled I/F for Q172H/Q173HCPU.

*2 Use the serial port of QCPU in the multiple CPU system since Q172D/Q173DCPU(-S1) has no direct coupled I/F.

Series	Model	Target software	Connection type		
			Direct CPU connection	Computer link connection	Ethernet connection
Motion controller CPU (A Series)	A171SCPU-S3N	GX Developer MX Component MX Sheet	○	×	×
	A171SHCPU				
	A171SHCPUN				
	A172SHCPU				
	A172SHCPUN				
	A173UHCPU				
	A173UHCPU-S1				
MELSEC-FX	FX_0	GX Developer GX Works2 FX Configurator-FP MX Component MX Sheet	○	×	×
	FX_{0S}				
	FX_{0N}				
	FX_1				
	FX_2				
	FX_{2C}				
	FX_{1S}				
	FX_{1N}				
	FX_{2N}				
	FX_{1NC}				
	FX_{2NC}				
	$FX_{3G(C)}$, FX_{3S}, FX_{3GE}	GX Developer FX Configurator-FP MX Component MX Sheet	○	×	×
		GX Works2	○	×	○
	$FX_{3U(C)}$	GX Developer FX Configurator-FP FX_{3U}-ENET-L Configuration tool MX Component MX Sheet	○	×	×
		GX Works2	○	×	○
MELSEC-WS	WS0-CPU0	-	×	×	×
	WS0-CPU1				
	WS0-CPU3				
MELSECNET/H remote I/O station	QJ72LP25-25	-	×	×	×
	QJ72LP25G				
	QJ72BR15				
CC-Link IE Field Network head module	LJ72GF15-T2	-	×	×	×

(Continued to next page)

Series	Model	Target software	Connection type		
			Direct CPU connection	Computer link connection	Ethernet connection
CC-Link IE field Network Ethernet adapter module	NZ2GF-ETB	GX Works2 MX Component	×	×	○
CNC	CNC C70 (Q173NCCPU)	GX Developer NC Configurator	○*1	○	○*2
	MELDAS C6/C64	GX Developer	○	×	×
Robot controller	CRnQ-700 (Q172DRCPU) CR750-Q (Q172DRCPU) CR751-Q (Q172DRCPU)	RT ToolBox2	○*3	×	○
	CRnD-700 CR750-D CR751-D		×	×	○
FREQROL	FREQROL-A500/A500L	FR Configurator	○	×	×
	FREQROL-F500/F500L				
	FREQROL-V500/V500L				
	FREQROL-E500				
	FREQROL-S500/S500E				
	FREQROL-F500J				
	FREQROL-D700				
	FREQROL-E700				
	FREQROL-E700EX				
	FREQROL-A700				
	FREQROL-F700				
MELIPM	MD-CX522-□□K (-A0)	FR Configurator	○	×	×
MELSERVO	MR-J2S-□A	-	×	×	×
	MR-J2S-□CP				
	MR-J2S-□CL				
	MR-J2M-P8A				
	MR-J2M-□DU				
	MR-JE-□A				
	MR-J3-□A				
	MR-J3-□T				
	MR-J3-□B	MR Configurator	○	×	×
		MR Configurator2	○	×	○
	MR-J4-□B MR-J4W2-□B MR-J4W3-□B	MR Configurator2	○	×	○

*1 Use the serial port of QCPU in the multiple CPU system since Q173NCCPU has no direct coupled I/F.

*2 Connect to the DISPLAY I/F of Q173NCCPU.
GX Developer accesses the PLC CPU which configures the multiple CPU system.

*3 Use the serial port of QCPU in the multiple CPU system since CRnQ-700 has no direct coupled I/F.

31.4 System Configuration

31.4.1 GX Works3, CW Configurator, GX Works2, GX Developer, GX LogViewer, MX Component, MX Sheet, CPU Module Logging Configuration Tool, Setting/Monitoring tool for C Controller module

■ When connecting the GOT and PC with USB

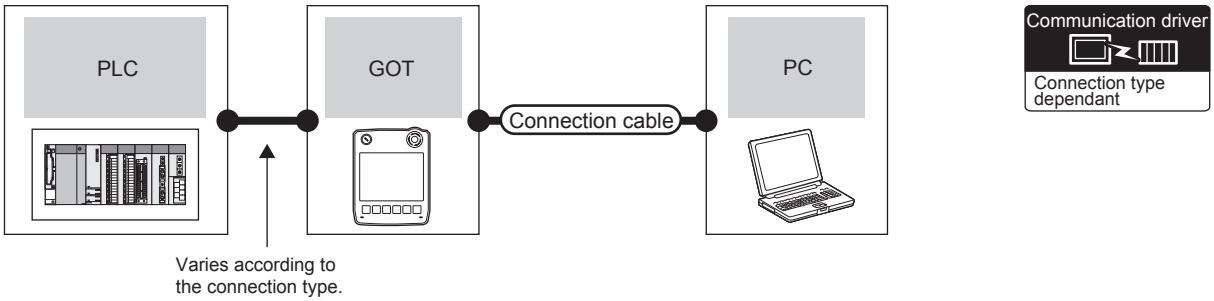

PLC	GOT		Connection cable		PC	Number of connectable equipment
Connection type	Model	Interface	Cable model	Max. distance	Software	
For the system configuration between the GOT and PLC, refer to the following. ☞ DIRECT CONNECTION TO CPU*1*2 ☞ COMPUTER LINK CONNECTION*1 ☞ ETHERNET CONNECTION	GT14 Handy	USB	GT09-C30USB-5P(3m) GT09-C20USB-5P(2m)	3m	GX Works3 CW Configurator GX Works2 GX Developer GX LogViewer MX Component MX Sheet CPU Module Logging Configuration Tool Setting/Monitoring tool for C Controller module	1 personal computer for 1 GOT

*1 CW Configurator, Setting/Monitoring tool for C Controller module is not supported.
*2 GX Works3 is not supported.

31.4.2 PX Developer, GX Configurator

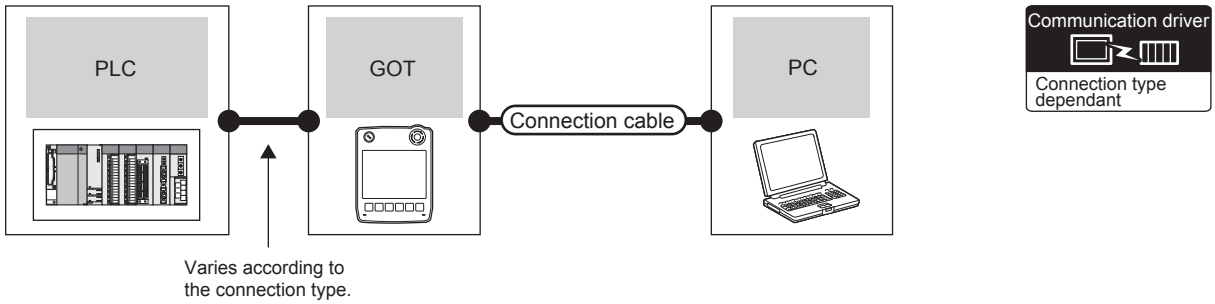

PLC	GOT		Connection cable		PC	Number of connectable equipment
Connection type	Model	Interface	Cable model	Max. distance	Software	
For the system configuration between the GOT and PLC, refer to the following. ☞ DIRECT CONNECTION TO CPU ☞ COMPUTER LINK CONNECTION	GT14 Handy	USB	GT09-C30USB-5P(3m) GT09-C20USB-5P(2m)	3m	PX Developer GX Configurator	1 personal computer for 1 GOT

31.4.3 MT Developer, MT Works2

■ When connecting the GOT and personal computer with USB

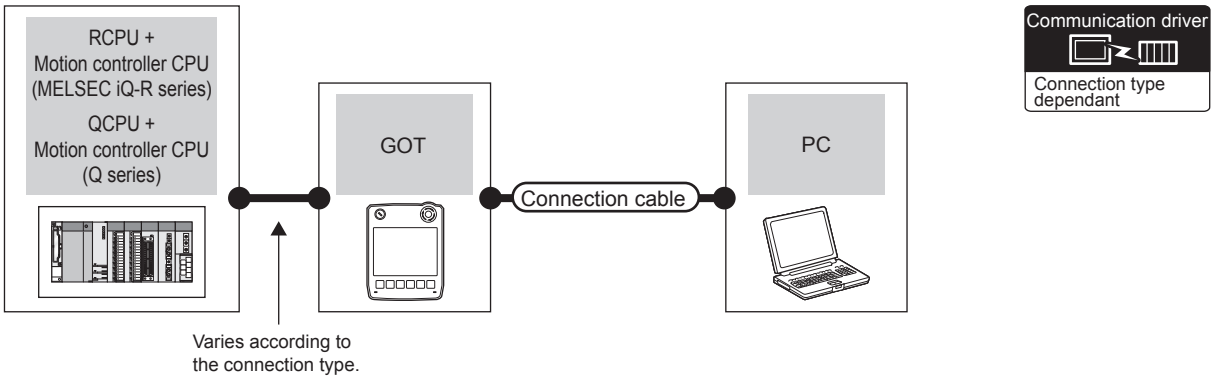

PLC	GOT		Connection cable		PC	Number of connectable equipment
Connection type	Model	Interface	Cable model	Max. distance	Software	
For the system configuration between the GOT and PLC, refer to the following. ☞ DIRECT CONNECTION TO CPU*1 ☞ ETHERNET CONNECTION	GT14 Handy	USB	GT09-C30USB-5P(3m) GT09-C20USB-5P(2m)	3m	MT Developer MT Works2	1 personal computer for 1 GOT

*1 The motion controller CPU (MELSEC iQ-R Series) does not support the direct CPU connection.

31.4.4 MR Configurator, MR Configurator2

■ When connecting the GOT and personal computer with USB

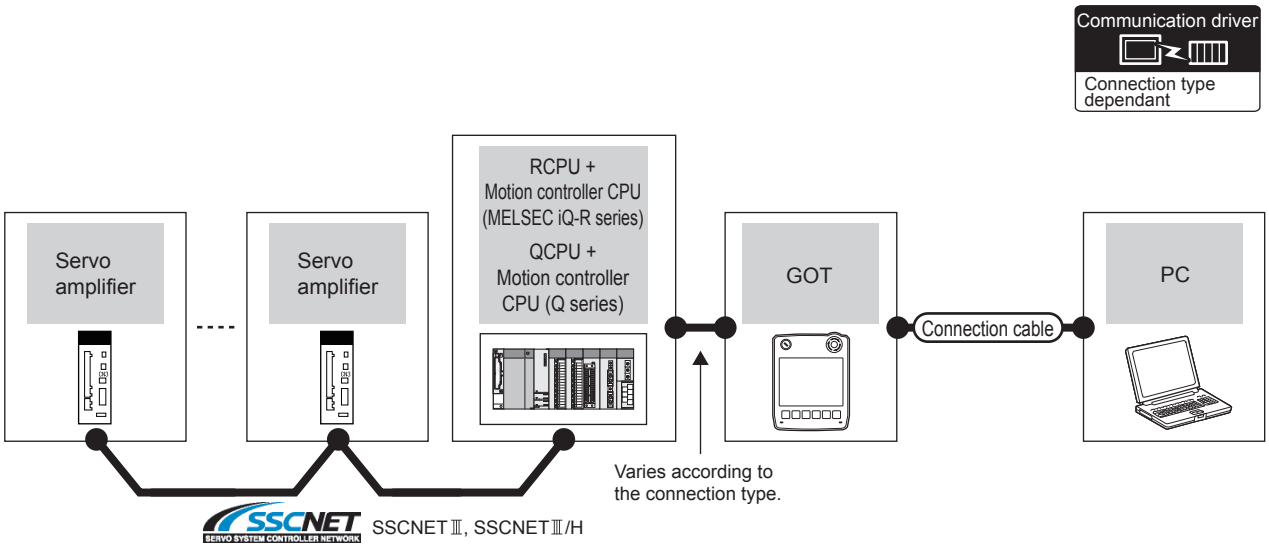

PLC	GOT		Connection cable		PC	Number of connectable equipment
Connection type	Model	Interface	Cable model	Max. distance	Software	
For the system configuration between the GOT and PLC, refer to the following. ☞ DIRECT CONNECTION TO CPU*2 ☞ ETHERNET CONNECTION*1	GT14 Handy	USB	GT09-C30USB-5P(3m) GT09-C20USB-5P(2m)	3m	MR Configurator MR Configurator2	1 personal computer for 1 GOT

*1 Only MR Configurator2 is compatible with the Ethernet connection.
*2 The motion controller CPU (MELSEC iQ-R Series) does not support the direct CPU connection.

31.4.5 FR Configurator

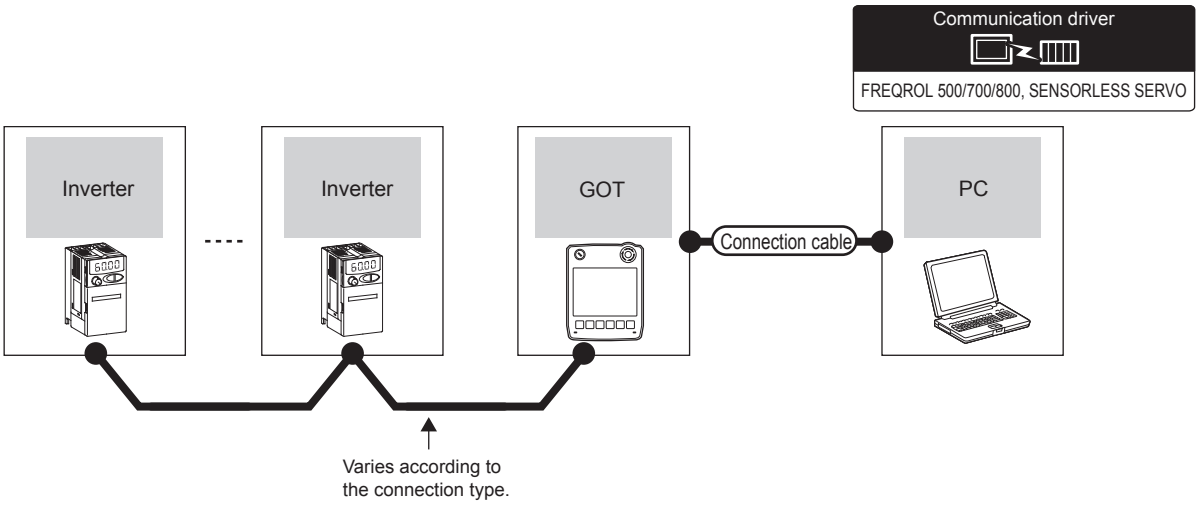

Inverter	GOT		Connection cable		PC	Number of connectable equipment
Connection type	Model	Interface	Cable model	Max. distance	Software	
For details on the system configuration between GOT and Mitsubishi inverter, refer to the following. INVERTER CONNECTION	GT14 Handy	USB	GT09-C30USB-5P(3m) GT09-C20USB-5P(2m)	3m	FR Configurator	1 personal computer for 1 GOT

31.4.6 FX Configurator-FP, FX3U-ENET-L Configuration tool

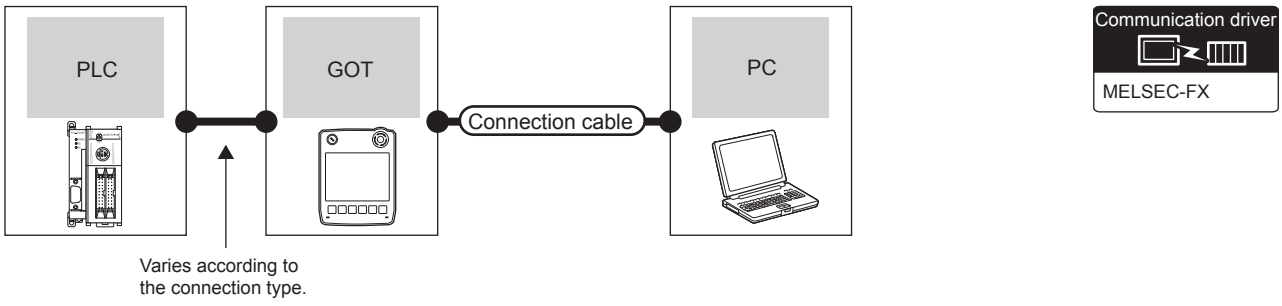

PLC	GOT		Connection cable		PC	Number of connectable equipment
Connection type	Model	Interface	Cable model	Max. distance	Software	
For the system configuration between the GOT and PLC, refer to the following. DIRECT CONNECTION TO CPU	GT14 Handy	USB	GT09-C30USB-5P(3m) GT09-C20USB-5P(2m)	3m	FX Configurator-FP FX3U-ENET-L Configuration tool	1 personal computer for 1 GOT

31.4.7 RT ToolBox2

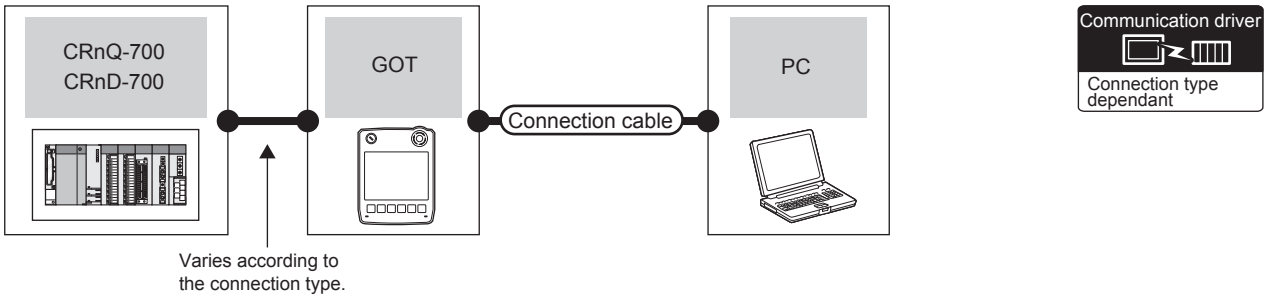

PLC	GOT		Connection cable		PC	Number of connectable equipment
Connection type	Model	Interface	Cable model	Max. distance	Software	
For the system configuration between the GOT and PLC, refer to the following. DIRECT CONNECTION TO CPU*1 ETHERNET CONNECTION	GT14 Handy	USB	GT09-C30USB-5P(3m) GT09-C20USB-5P(2m)	3m	RT ToolBox2	1 personal computer for 1 GOT

*1 CRnD-700 is not compatible with the direct CPU connection.

31.4.8 NC Configurator

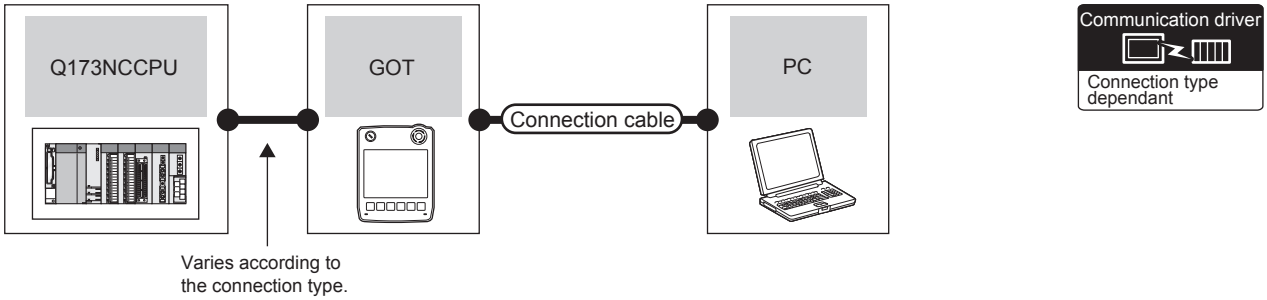

PLC	GOT		Connection cable		PC	Number of connectable equipment
Connection type	Model	Interface	Cable model	Max. distance	Software	
For the system configuration between the GOT and PLC, refer to the following. ETHERNET CONNECTION	GT14 Handy	USB	GT09-C30USB-5P(3m) GT09-C20USB-5P(2m)	3m	NC Configurator	1 personal computer for 1 GOT

31.5 GOT Side Settings

31.5.1 Setting communication interface

■ Controller setting

Set the channel of the connected equipment.

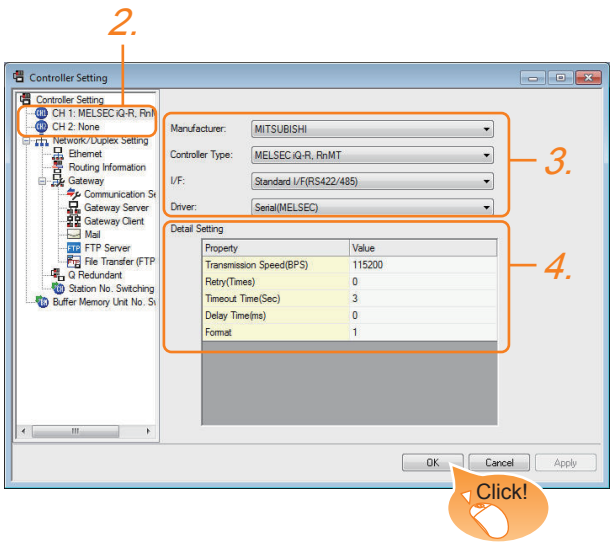

1. Select [Common] → [Controller Setting] from the menu.
2. The Controller Setting window is displayed. Select the channel to be used from the list menu.
3. Set Manufacturer, Controller Type, I/F, and Driver according to the connected equipment to be used.
4. The detailed setting is displayed after Manufacturer, Controller Type, I/F, and Driver are set.
   Make the settings according to the usage environment.

Click the OK button when settings are completed.

POINT

The settings of connecting equipment can be confirmed in [I/F Communication Setting].
For details, refer to the following.

18.1.2 I/F communication setting

■ Communication setting with personal computer

Set the communication setting between the GOT and the personal computer.

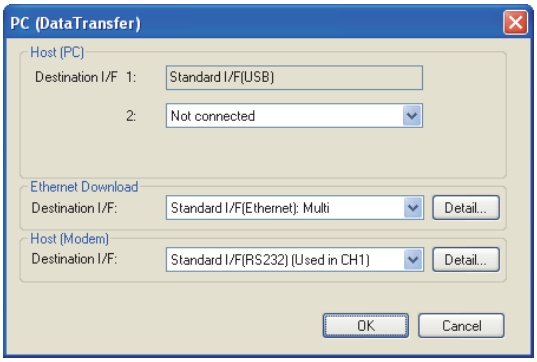

1. Select [Common] → [Peripheral Setting] → [PC (DataTransfer)] from the menu.
2. The setting dialog box is displayed. Set the interface of the GOT to be used in the communication with the personal computer.
   (a) Host (PC) setting
   When communicating the GOT and the personal computer in the direct connection, set the interface of the GOT to be used in the communication with the personal computer.
   (b) Ethernet download setting
   When communicating the GOT via Ethernet, set the interface of the GOT to be used in the communication with the personal computer.

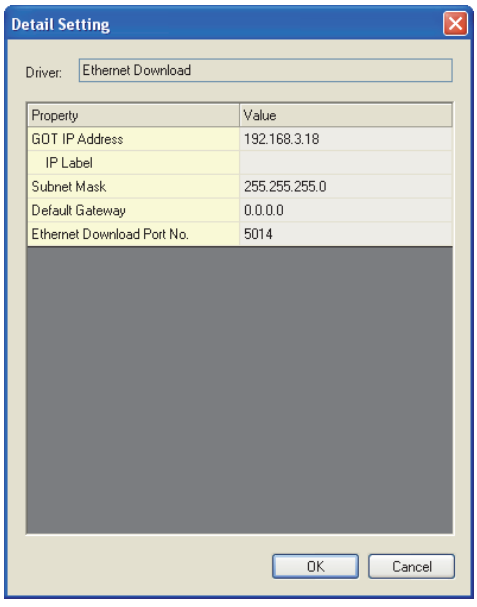

Item	Description	Range
GOT IP Address	Set the IP address of the GOT. (Default: 192.168.3.18)	0.0.0.0 to 255.255.255.255

Item	Description	Range
IP Label	Set the IP label of the detail settings.	-
Subnet Mask	Set the subnet mask for the sub network. (Only for connection via router) If the sub network is not used, the default value is set. (Default: 255.255.255.0)	0.0.0.0 to 255.255.255.255
Default Gateway	Set the router address of the default gateway where the GOT is connected. (Only for connection via router) (Default: 0.0.0.0)	0.0.0.0 to 255.255.255.255
Ethernet Download Port No.	Set the GOT port No. for Ethernet download. (Default: 5014)	1024 to 5010, 5014 to 65534 (Except for 5011, 5012, 5013, and 49153)

Click the [OK] button when settings are completed.

POINT

(1) Setting the FA transparent function of GX Works2
When connecting the GOT and the personal computer in Ethernet connection, set the GOT IP address and the Ethernet download port No. to the same as the contents of PLC side I/F detailed setting of GOT.

31.6.4 Accessing by GX Works2

(2) Communication interface setting by Utility
The communication interface setting can be changed on the Utility's [Communication Settings] after downloading [Communication Settings] of project data. For details on the Utility, refer to the following manual.

11. COMMUNICATION INTERFACE SETTING (COMMUNICATION SETTING)

(3) Precedence in communication settings
When settings are made by GT Designer3 or the Utility, the latest setting is effective.

■ GOT Setup

When using the multi-channel function, specify the channel No. on which the FA transparent function is executed.

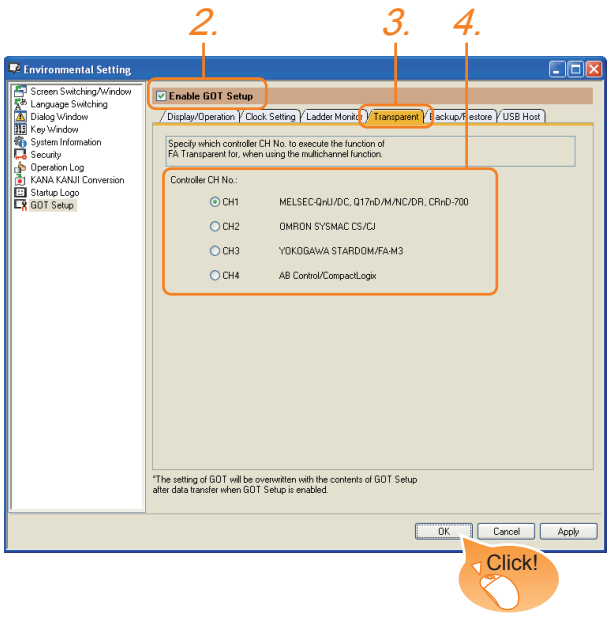

1. Select [Common] → [GOT Environmental Setting] → [GOT Setup] from the menu.
2. Check [Enable GOT Setup].
3. Select the [Transparent] tab.
4. As necessary, check [CH1] or [CH2]. (Default: CH1)

Click the [OK] button when settings are completed.

POINT

Transparent setting on the utility screen

Transparent setting can be performed by the GOT. For details of the operating, refer to the following.

12.3 Transparent Mode Setting

31.6 Personal Computer Side Setting

31.6.1 Accessing by GX Works3

The following shows the procedure to set the FA transparent function of GX Works3.

■ When connecting the GOT and personal computer with USB

(1) Connecting the GOT and PLC in Ethernet connection

(a) When connecting to RCPU

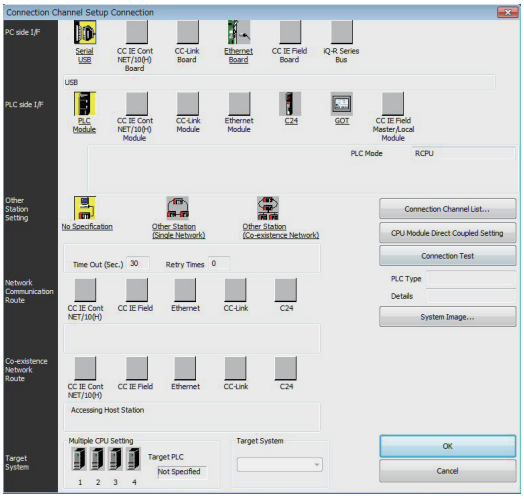

1. Click [Online] → [Connection Destination] on GX Works3.
2. [Connection Channel Setup] is displayed.
3. Set [Connection Channel Setup].
   PC side I/F : USB
   PLC side I/F : GOT
   Other Station Setting : No Specification

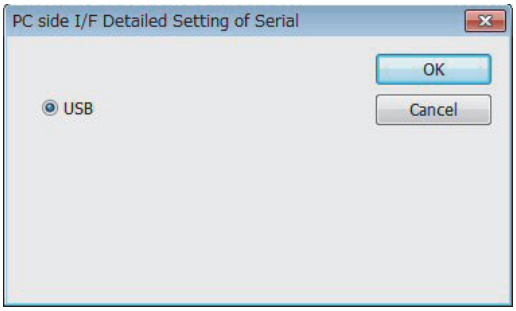

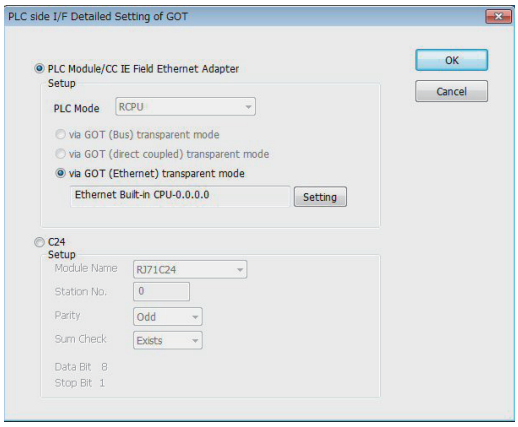

4. Double-click [GOT] of the PLC side I/F to display [PLC side I/F Detailed Setting of GOT].
5. On the [PLC side I/F Detailed Setting of GOT], mark the [via GOT (Ethernet) transparent mode] checkbox and click [Setting].

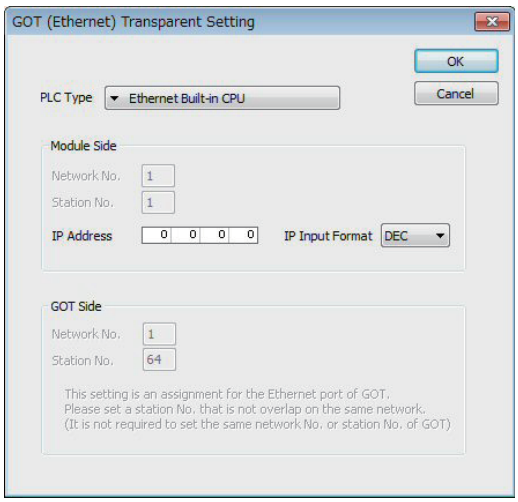

6. By clicking [Setting], the [GOT (Ethernet) Transparent Setting] is displayed.
   Here, set the built-in Ethernet port CPU or Ethernet module, which is firstly connected via a GOT.
7. Set [RJ71EN71] for [PLC Type].

8. Specify the number for [Network No.] and [Station No.] same as the number assigned to the Ethernet module.

9. Specify the IP address for [IP Address] same as the IP address assigned to the built-in Ethernet port QCPU or Ethernet module.

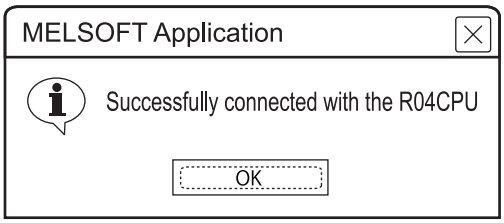

10. The screen returns to the [Connection Channel Setup]. Click [Connection Test] to check if GX Works3 has been connected to the RCPU.

(b) When connecting to FX5U/FX5UC

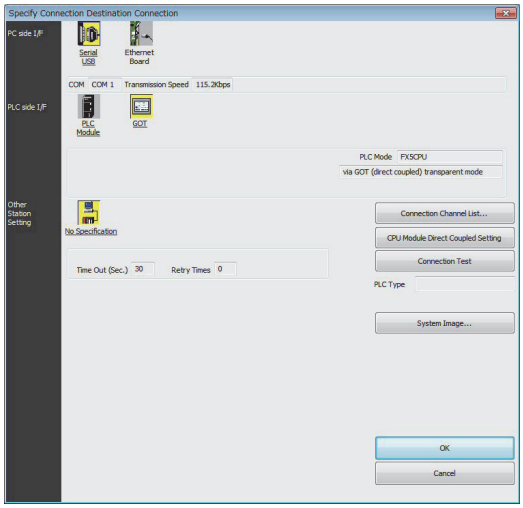

1. Click [Online] → [Specify Connection Destination] in GX Works3.

2. The [Specify Connection Destination 1] is displayed.

3. Set the [Specify Connection Destination 1]:
PC side I/F : Serial USB
PLC side I/F : GOT
Other Station Setting : No Specification

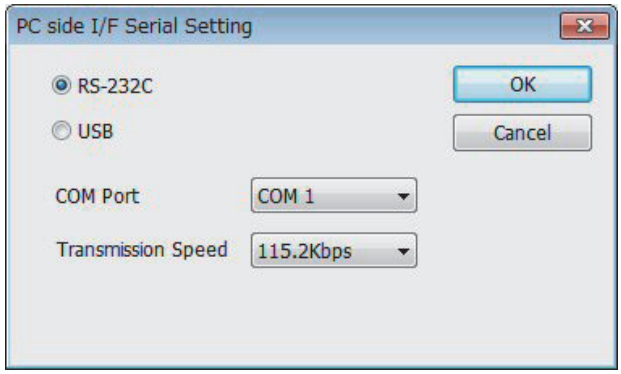

4. Double-click [Serial USB] of the PC side I/F to display [PC side I/F Serial Setting].

5. Check-mark either of the following in [PC side I/F Serial Setting].

When connecting the GOT and PC with serial
Mark the [RS-232C] checkbox.

When connecting the GOT and PC with USB
Mark the [USB] checkbox.

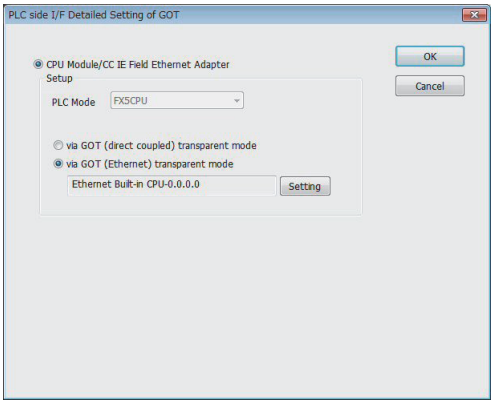

6. Double-click [GOT] of the PLC side I/F to display [PLC side I/F Detailed Setting of GOT].

7. On the [PLC side I/F Detailed Setting of GOT], mark the [via GOT (Ethernet) transparent mode] checkbox and click [Setting...].

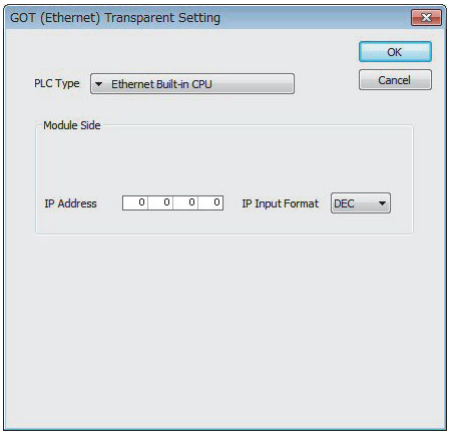

8. By clicking [Setting], the [GOT (Ethernet) transparent setting] is displayed.
Here, set the built-in Ethernet port CPU , which is firstly connected via a GOT.

9. Specify the IP address for [IP address] same as the IP address assigned to the built-in Ethernet port CPU.

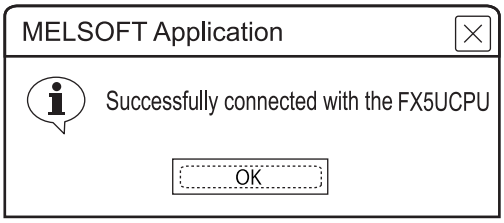

10. The screen returns to Specify Connection Destination Connection1. Click [Connection Test] to check if GX Works3 has been connected to the FX5UCPU.

(2) Connecting the GOT and PLC in direct CPU connection(for FX5U/FX5UC only)

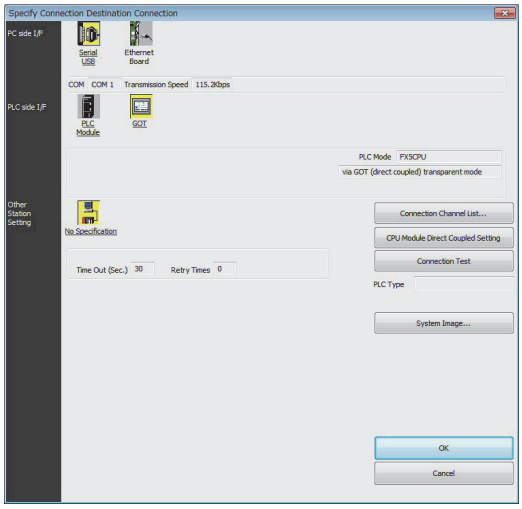

1. Click [Online] → [Specify Connection Destination] on GX Works3.

2. The [Specify Connection Destination 1] is displayed.

3. Set the [Specify Connection Destination 1]:
PC side I/F : Serial USB
PLC side I/F : GOT
Other Station Setting : No Specification:

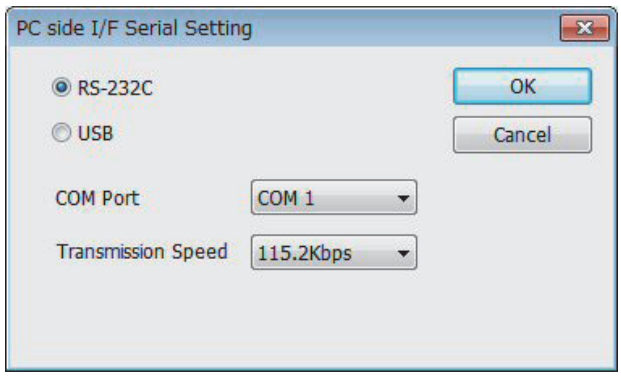

4. Double-click [Serial USB] of the PC side I/F to display [PC side I/F Serial Setting].

5. Check-mark either of the following in [PC side I/F Serial Setting].

When connecting the GOT and PC with serial
Mark the [RS-232C] checkbox.

When connecting the GOT and PC with USB
Mark the [USB] checkbox.

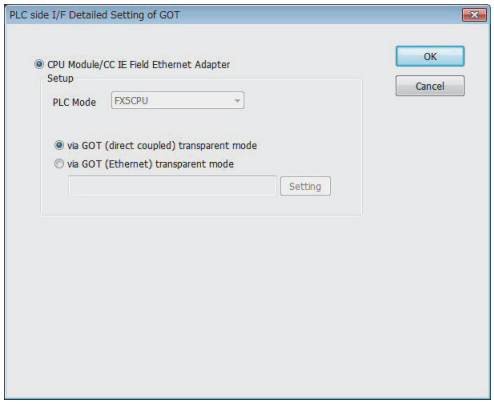

6. Double-click [GOT] of the PLC side I/F to display [PLC side I/F Detailed Setting of GOT].

7. Check-mark [via GOT (direct coupled) transparent mode] in [PLC side I/F Detailed Setting of GOT].

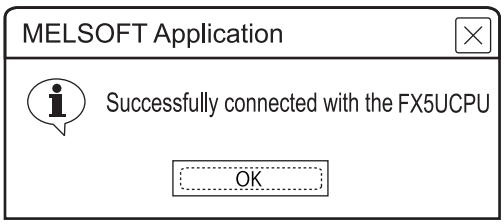

8. The screen returns to Specify Connection Destination Connection1. Click [Connection Test] to check if GX Works3 has been connected to the FX5UCPU.

(3) Connecting the GOT and PLC in computer link connection (when connecting to RJ71C24)

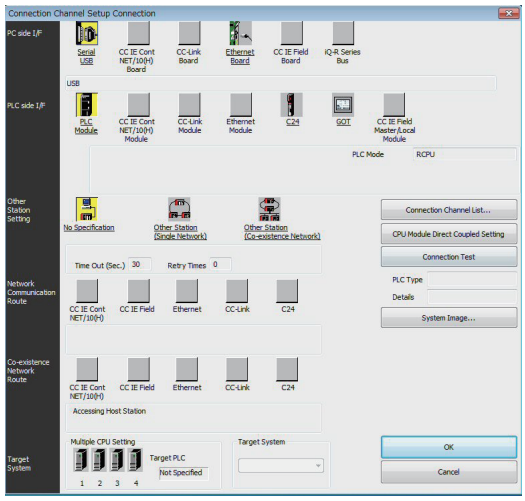

1. Click [Online] → [Connection Destination] on GX Works3.

2. [Connection Channel Setup] is displayed.

3. Set [Connection Channel Setup].
PC side I/F : USB
PLC side I/F : GOT
Other Station Setting : No Specification

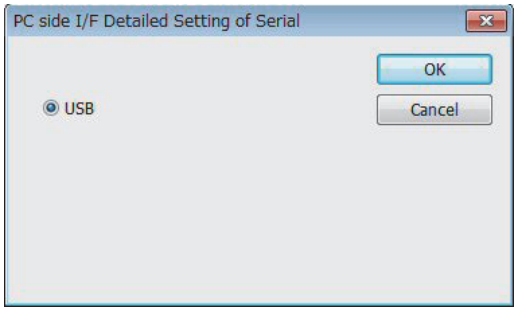

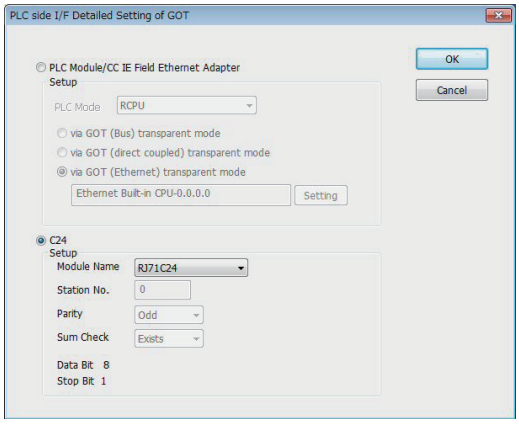

4. Double-click [GOT] of the PLC side I/F to display [PLC side I/F Detailed Setting of GOT].

5. Check-mark [C24] in [PLC side I/F Detailed Setting of GOT].

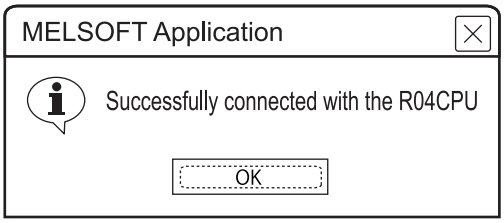

6. The screen returns to the [Connection Channel Setup]. Click [Connection Test] to check if GX Works3 has been connected to the RCPU.

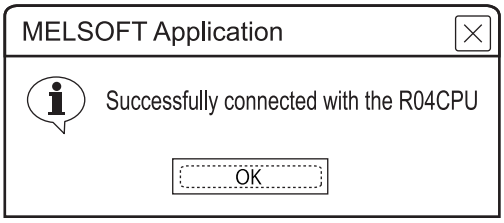

7. The screen returns to the [Connection Channel Setup]. Click [Connection Test] to check if GX Works3 has been connected to the RCPU.

31.6.2 Accessing by CW Configurator

The following shows the procedure to set the FA transparent function of CW Configurator.

■ When connecting the GOT and personal computer with USB

(1) Connecting the GOT and PLC in Ethernet connection

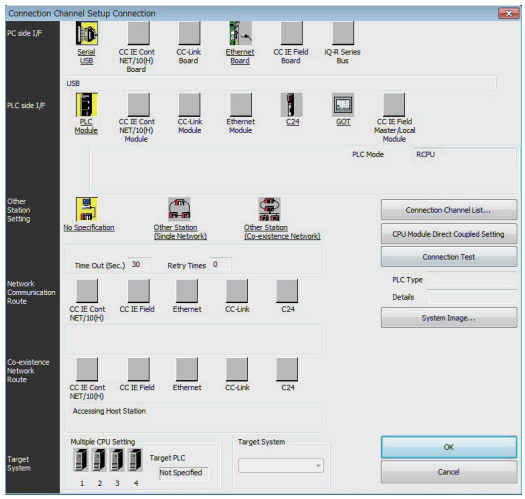

1. Click [Online] → [Connection Destination] on CW Configurator.
2. [Connection Channel Setup] is displayed.
3. Set [Connection Channel Setup].
   PC side I/F : USB
   PLC side I/F : GOT
   Other Station Setting : No Specification

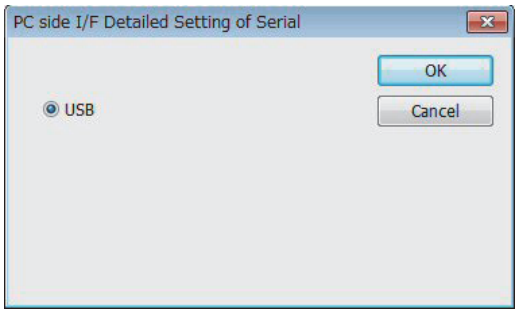

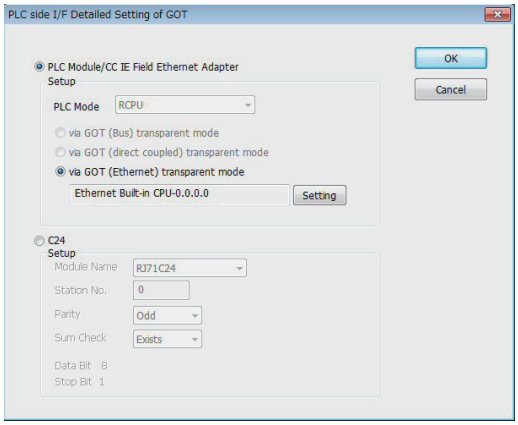

4. Double-click [GOT] of the PLC side I/F to display [PLC side I/F Detailed Setting of GOT].

5. On the [PLC side I/F Detailed Setting of GOT], mark the [via GOT (Ethernet) transparent mode] checkbox and click [Setting].

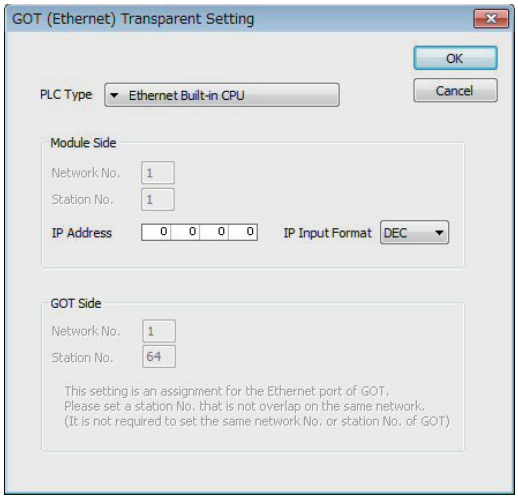

6. By clicking [Setting], the [GOT (Ethernet) Transparent Setting] is displayed.
Here, set the built-in Ethernet port CPU, which is firstly connected via a GOT.

7. Set [Ethernet Built-in CPU] for [PLC Type].

8. Specify the number for [Network No.] and [Station No.] same as the number assigned to the Ethernet module.

9. Specify the IP address for [IP Address] same as the IP address assigned to the built-in Ethernet port QCPU or Ethernet module.

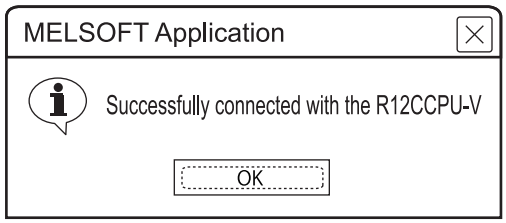

10. The screen returns to the [Connection Channel Setup]. Click [Connection Test] to check if GX Works3 has been connected to the R12CCPU-V.

31.6.3 Accessing the PLC by GX Developer, PX Developer, or GX Configurator

The following shows the procedure to set the FA transparent function of GX Developer.

GX Configurator is an add-on software of GX Developer. (Except for GX Configurator-QP)

■ Connecting the GOT and PLC in direct connection (when connecting to QCPU (Q mode))

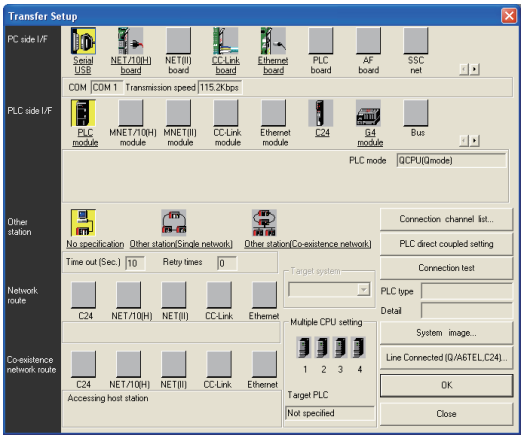

1. Click [Online] → [Read from PLC] in GX Developer.
2. Set the [PLC Series] to [QCPU (Q mode)].
3. The [Transfer Setup] is displayed.
4. Set the [Transfer Setup]:
   PC side I/F: Serial USB (COM)
   PLC side I/F: PLC module
   Other station: No specification

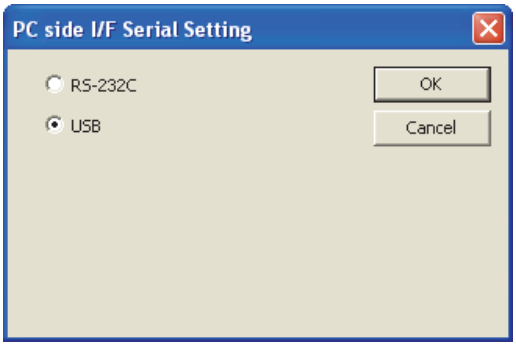

5. Double-click [Serial] of the PC side I/F to display [PC side I/F Serial setting].
6. Check the following for [PC side I/F Serial Setting].

When connecting the GOT and PC with USB

Mark the [USB] checkbox.

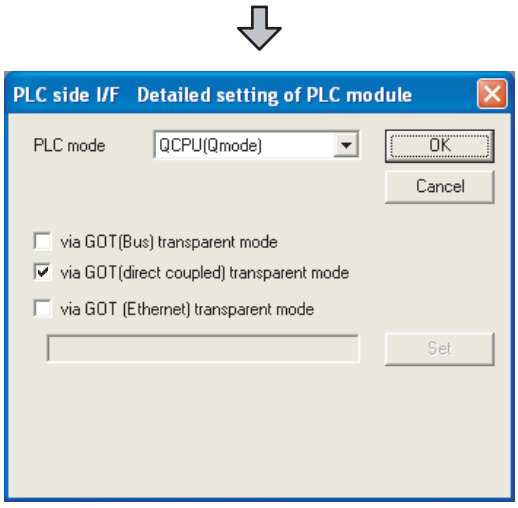

7. Double-click [PLC module] of the PLC side I/F to display [PLC side I/F Detailed setting of PLC module].
8. Check-mark the following in [PLC side I/F Detailed setting of PLC module].

Direct CPU connection *1

Mark the [via GOT(direct coupled) transparent mode] checkbox.

*1 This is the operation required in the case of using GX Developer of which version is 8.22Y and above.

9. The screen returns to [Transfer Setup]. Click Connection Test to check if GX Developer has been connected to the QCPU (Q mode).

■ Connecting the GOT and PLC in computer link connection (when connecting to QJ71C24(N))
(GX Configurator is not supported.)

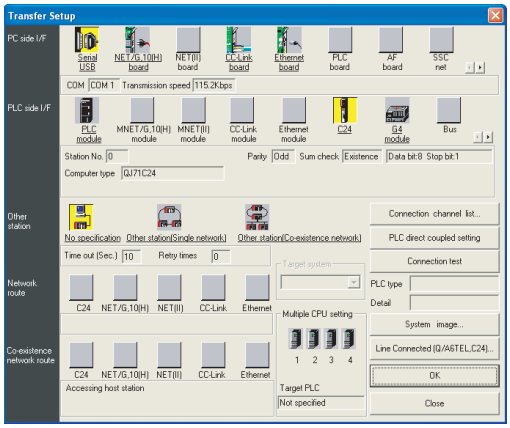

1. Click [Online] → [Read from PLC] in GX Developer.
2. Set the [PLC Series] to [QCPU(Q mode)].
3. The [Transfer Setup] is displayed.
4. Set the [Transfer Setup]:
PC side I/F: Serial
PLC side I/F: C24
Other station: No specification

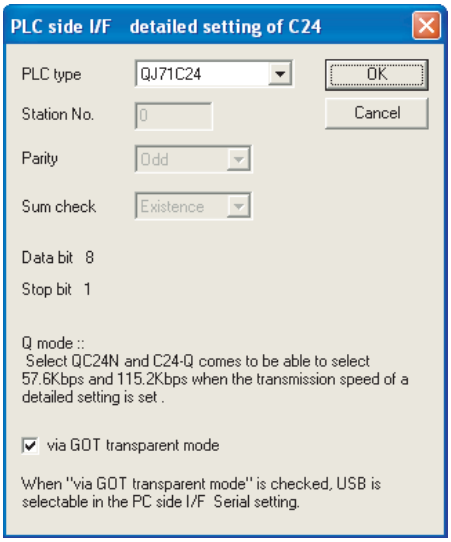

5. Return to [Transfer setup] and double-click [C24] of the PLC side I/F to display [PLC side I/F detailed setting of C24].
6. Check [via GOT transparent mode] for [PLC side I/F detailed setting of C24].

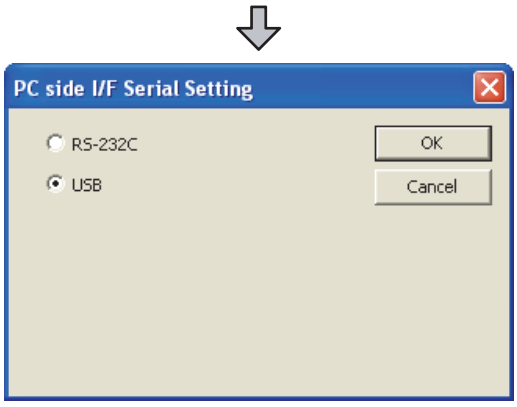

7. Double-click [Serial] of the PC side I/F to display [PC side I/F Serial setting].
8. Check the following for [PC side I/F Serial Setting].

When connecting the GOT and PC with USB
Mark the [USB] checkbox.

9. The screen returns to [Transfer Setup]. Click Connection Test to check if GX Developer has been connected to the QCPU (Q mode).

■ Connecting the GOT and PLC in Ethernet connection (when connecting to QCPU (Q mode))

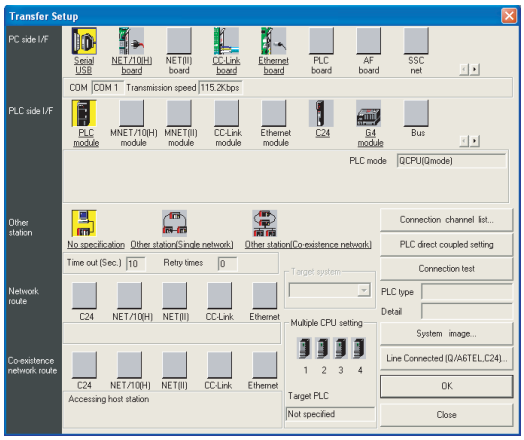

1. Click [Online] → [Read from PLC] in GX Developer.
2. Set the [PLC Series] to [QCPU(Q mode)].
3. The [Transfer Setup] is displayed.
4. Set the [Transfer Setup]:
   PC side I/F: Serial USB (COM)
   PLC side I/F: PLC module
   Other station: Other station(Single network)

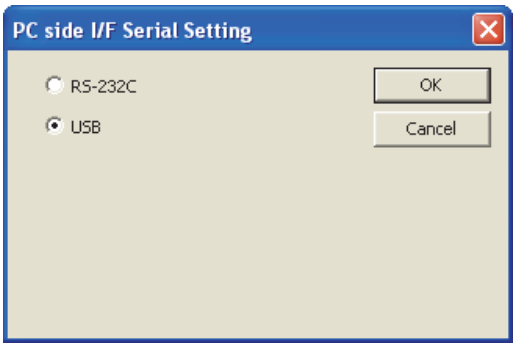

5. Double-click [Serial] of the PC side I/F to display [PC side I/F Serial setting].
6. Check the following for [PC side I/F Serial Setting].

When connecting the GOT and PC with USB

Mark the [USB] checkbox.

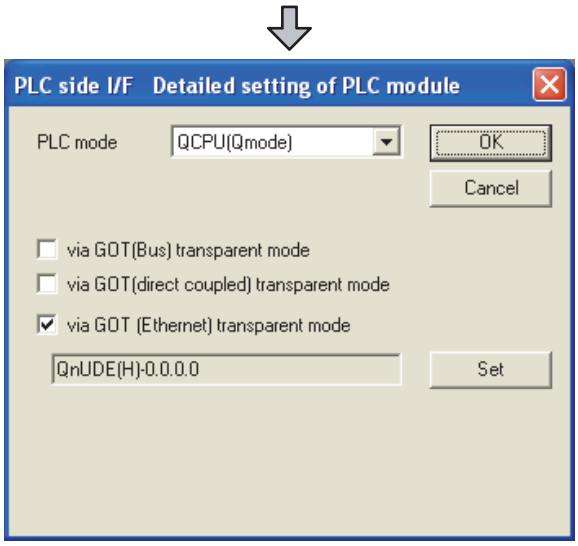

7. Double-click [PLC module] of the PLC side I/F to display [PLC side I/F Detailed setting of PLC module].
8. On the [PLC side I/F Detailed setting of PLC module], mark the [via GOT(Ethernet) transparent mode] checkbox and click [Set].

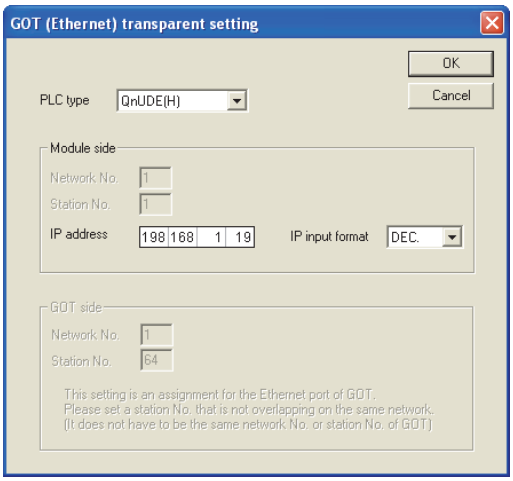

9. By clicking [Set], the [GOT (Ethernet) transparent setting] is displayed.
   Here, set the built-in Ethernet port QCPU or Ethernet module, which is firstly connected via a GOT.
10. Set [QnUDE(H)] or [QJ71E71] for [Type name].
    When connecting to the CNC C70, select [QJ71E71].
    When connecting to the Q170MCPU, select [QnUDE(H)].
    When connecting to the Q173NCCPU, select [QJ71E71].
11. Specify the number for [Network No.] and [Station No.] same as the number assigned to the Ethernet module.
    When [QnUDE(H)] is set for [PLC type], the setting is not required.

12. Specify the IP address assigned to the built-in Ethernet port QCPU or Ethernet module for [IP address].

13. The screen returns to [Transfer Setup]. Click Connection Test to check if GX Developer has been connected to the QCPU (Q mode).

■ Connecting the GOT and PLC in direct connection (when connecting to FXCPU)

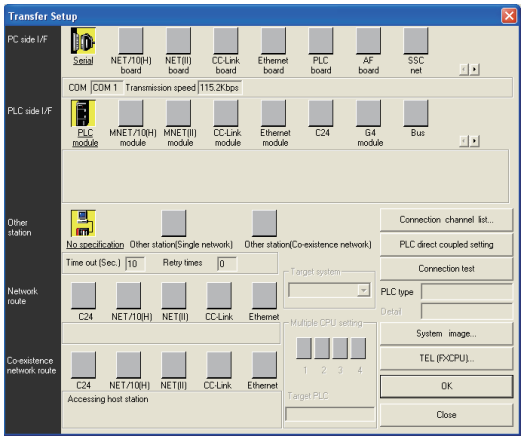

1. Click [Online] → [Read from PLC] in GX Developer.
2. Set the [PLC Series] to [FXCPU].
3. The [Transfer Setup] is displayed.
4. Set the [Transfer Setup]:
   PC side I/F: Serial
   PLC side I/F: PLC module
   Other station: No specification

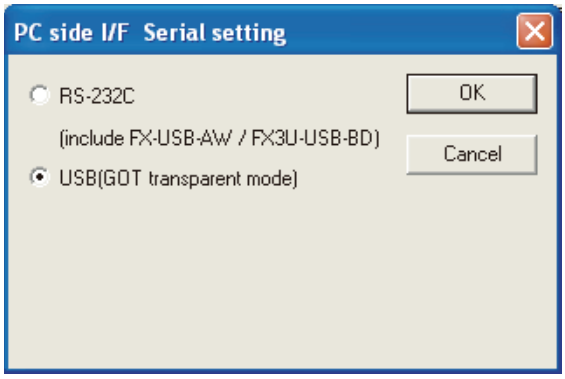

5. Double-click [Serial] of the PC side I/F to display [PC side I/F Serial setting].
6. Check the following for [PC side I/F Serial Setting].

When connecting the GOT and PC with USB
Mark the [USB (GOT transparent mode)] checkbox.

7. The screen returns to the [Transfer Setup]. Click the Connection Test to check if GX Developer has been connected to the FXCPU.

POINT

How to operate GX Developer

For the GX Developer operation method, refer to the following manual.

☞ GX Developer Version□ Operating Manual

31.6.4 Accessing by GX Works2

The following shows the procedure to set the FA transparent function of GX Works2.

■ When connecting the GOT and PC with USB

(1) Connecting the GOT and PLC in direct CPU connection

(a) Connecting to QCPU (Q mode)

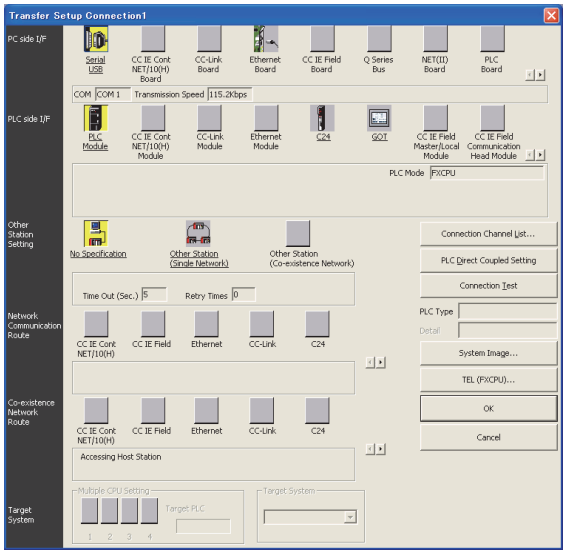

1. Click the Connection Destination view → [Connection Destination] → [(Connection target data name)] in the Navigation window of GX Works2.

2. The [Transfer Setup] is displayed.

3. Set the [Transfer Setup]:
PC side I/F: Serial USB
PLC side I/F: GOT
Other station: No specification

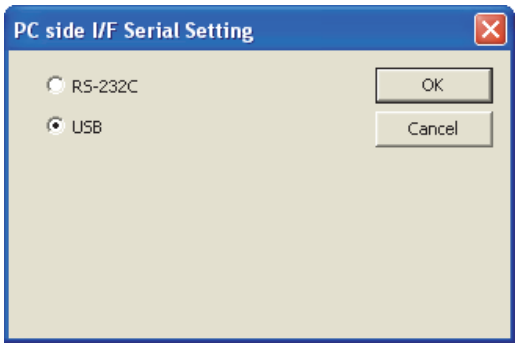

4. Double-click [Serial] of the PC side I/F to display [PC side I/F Serial setting].

5. Check the following for [PC side I/F Serial Setting].

When connecting the GOT and PC with USB
Mark the [USB] checkbox.

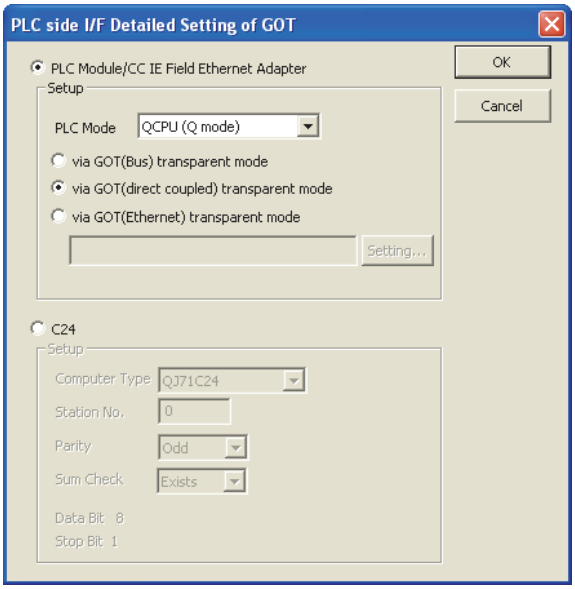

6. Double-click [GOT] of the PLC side I/F to display [PLC side I/F Detailed Setting of GOT].

7. Check-mark the following in [PLC side I/F Detailed Setting of GOT].

Direct CPU connection

Mark the [via GOT (direct coupled) transparent mode] checkbox.

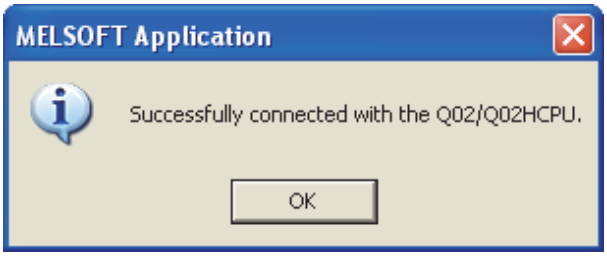

8. The screen returns to [Transfer Setup]. Click Connection Test to check if GX Developer has been connected to the QCPU (Q mode).

(b) Connecting to FXCPU

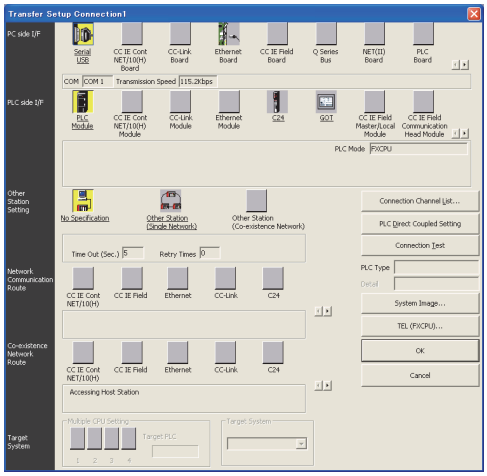

1. Click the Connection Destination view → [Connection Destination] → [(Connection target data name)] in the Navigation window of GX Works2.

2. The [Transfer Setup] is displayed.

3. Set the [Transfer Setup]:
PC side I/F: Serial USB
PLC side I/F: GOT
Other station: No specification

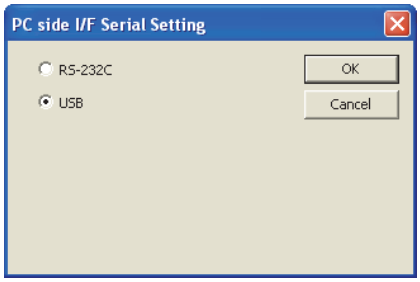

4. Double-click [Serial USB] of the PC side I/F to display [PC side I/F Serial Setting].

5. Check-mark either of the following in [PC side I/F Serial Setting].

When connecting the GOT and PC with serial

Mark the [RS-232C] checkbox.

When connecting the GOT and PC with USB

Mark the [USB] checkbox.

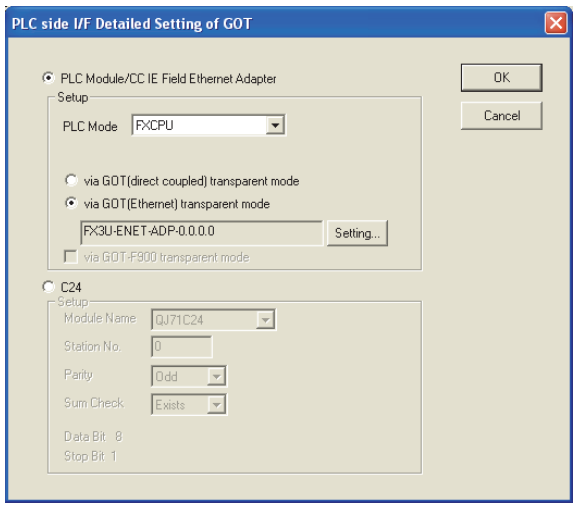

6. Double-click [GOT] of the PLC side I/F to display [PLC side I/F Detailed Setting of GOT].

7. On the [PLC side I/F Detailed Setting of GOT], mark the [via GOT (Ethernet) transparent mode] checkbox and click [Set].

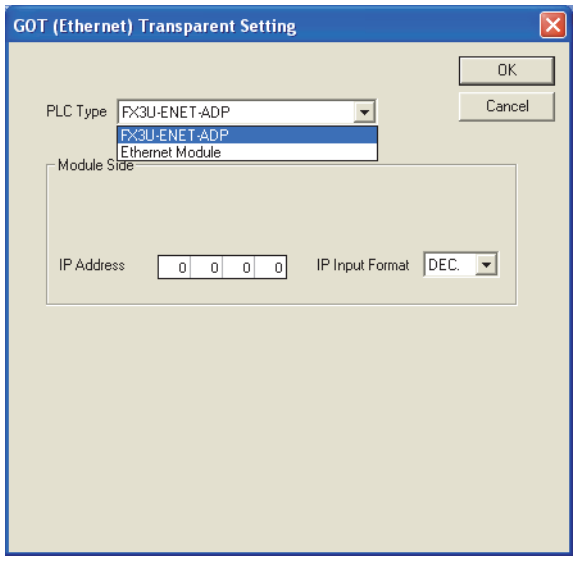

8. By clicking [Set], the [GOT (Ethernet) transparent setting] is displayed.
Here, set [FX3U-ENET-ADP] or [Ethernet Module], which is connected via a GOT.

9. Set [FX3U-ENET-ADP] or [Ethernet Module] for [PLC Type].

10. Specify the IP address assigned to [FX3U-ENET-ADP] or [Ethernet Module].

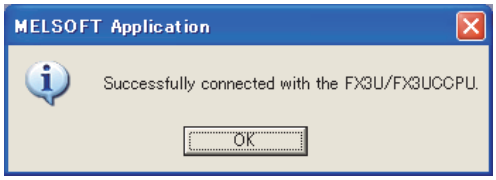

11. The screen returns to the [Transfer Setup]. Click the Connection Test to check if GX Developer has been connected to the FXCPU.

(2) Connecting the GOT and PLC in computer link connection (when connecting to QJ71C24(N))

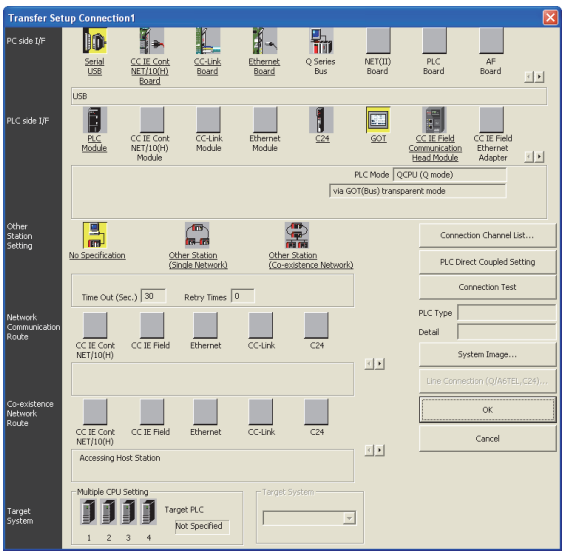

1. Click the Connection Destination view → [Connection Destination] → [(Connection target data name)] in the Navigation window of GX Works2.

2. The [Transfer Setup] is displayed.

3. Set the [Transfer Setup]:
PC side I/F: Serial USB
PLC side I/F: GOT
Other station: No specification

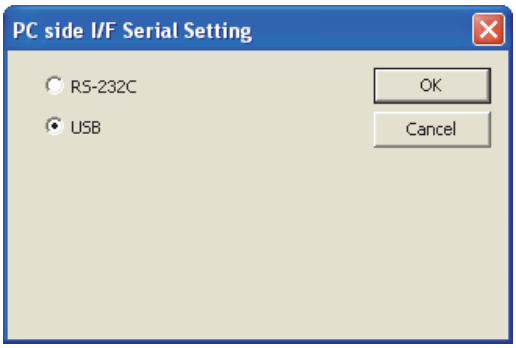

4. Double-click [Serial USB] of the PC side I/F to display [PC side I/F Serial Setting].

5. Check the following for [PC side I/F Serial Setting].

When connecting the GOT and PC with USB
Mark the [USB] checkbox.

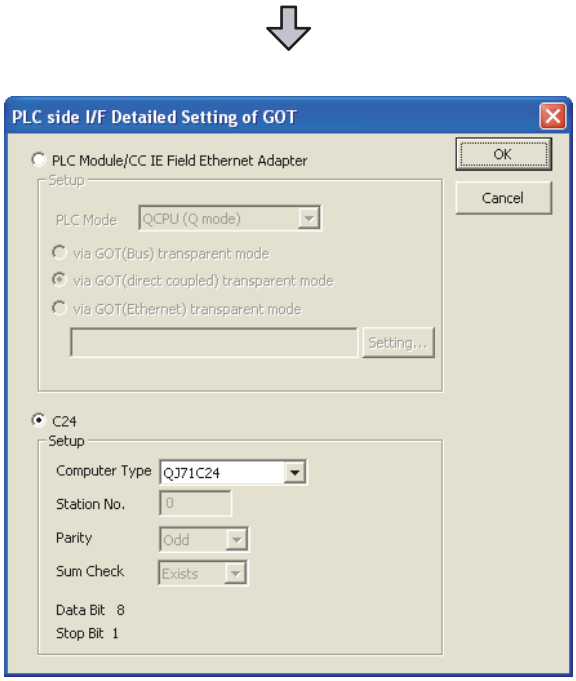

6. Double-click [GOT] of the PLC side I/F to display [PLC side I/F Detailed Setting of GOT].

7. Check-mark [C24] in [PLC side I/F Detailed Setting of GOT].

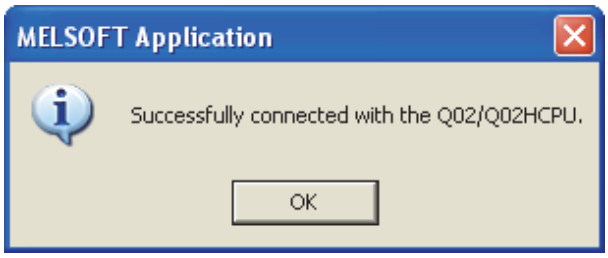

8. The screen returns to [Transfer Setup]. Click Connection Test to check if GX Developer has been connected to the QCPU (Q mode).

(3) Connecting the GOT and PLC in Ethernet connection (when connecting to QCPU (Q mode))

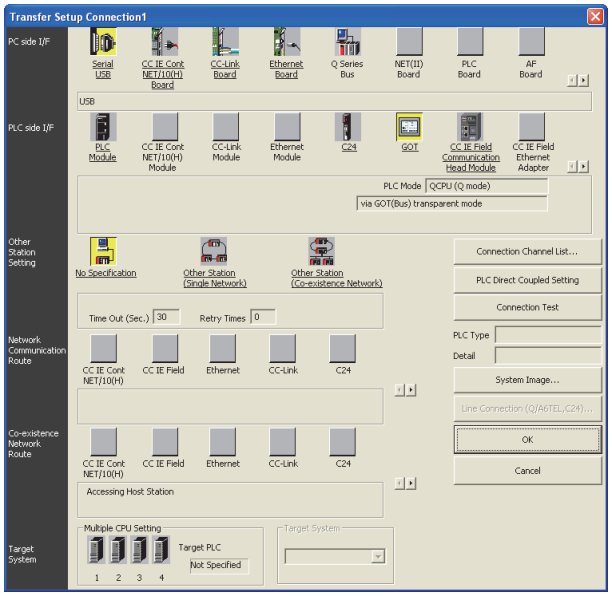

1. Click the Connection Destination view → [Connection Destination] → [(Connection target data name)] in the Navigation window of GX Works2.

2. The [Transfer Setup] is displayed.

3. Set the [Transfer Setup]:
PC side I/F: Serial USB
PLC side I/F: GOT
Other station: No specification

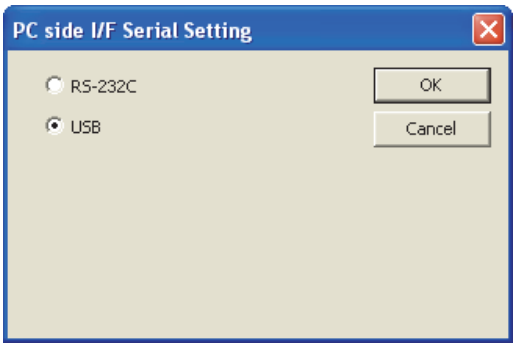

4. Double-click [Serial USB] of the PC side I/F to display [PC side I/F Serial Setting].

5. Check the following for [PC side I/F Serial Setting].

When connecting the GOT and PC with USB
Mark the [USB] checkbox.

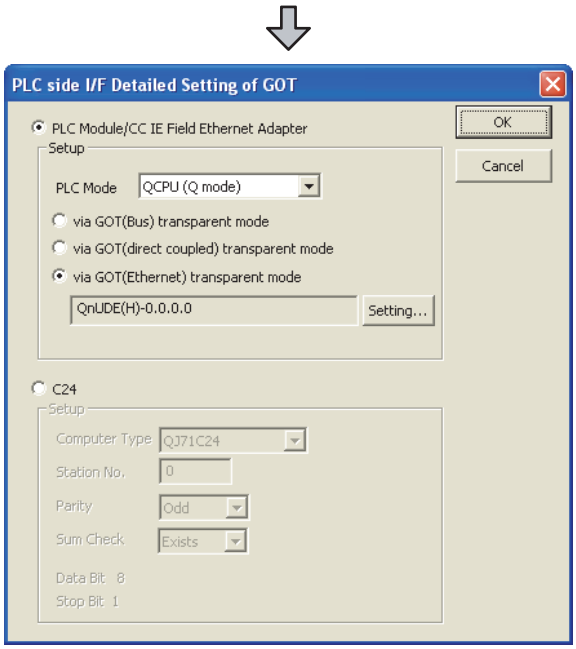

6. Double-click [GOT] of the PLC side I/F to display [PLC side I/F Detailed Setting of GOT].

7. On the [PLC side I/F Detailed Setting of GOT], mark the [via GOT (Ethernet) transparent mode] checkbox and click [Set].

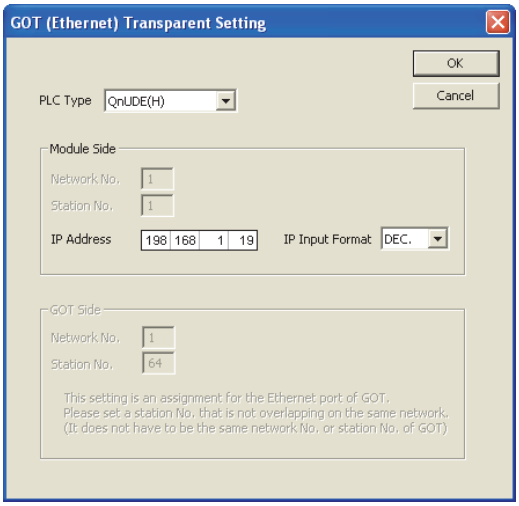

8. By clicking [Set], the [GOT (Ethernet) transparent setting] is displayed.
Here, set the built-in Ethernet port QCPU or Ethernet module, which is firstly connected via a GOT.

9. Set [QnUDE(H)] or [QJ71E71] for [Type name].
When connecting to the CNC C70, select [QJ71E71].
When connecting to the Q170MCPU, select [QnUDE(H)].

10. Specify the number for [Network No.] and [Station No.] same as the number assigned to the Ethernet module.
When [QnUDE(H)] is set for [PLC type], the setting is not required.

11. Specify the IP address assigned to the built-in Ethernet port QCPU or Ethernet module for [IP address].

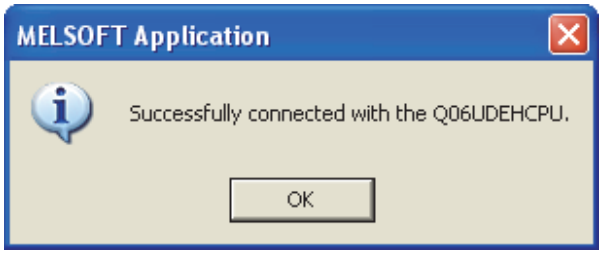

12. The screen returns to [Transfer Setup]. Click Connection Test to check if GX Developer has been connected to the QCPU (Q mode).

(4) Connecting the GOT and Ethernet adapter (NZ2GF-ETB) in Ethernet connection, and connecting it to a PLC in the CC-Link IE Field Network

This section describes the settings of GX Works2 in the following case of system configuration.

POINT

Version of GX Works2

GX Works2 Version 1.34L or later is required to execute the FA transparent function with using Ethernet adapter (NZ2GF-ETB).

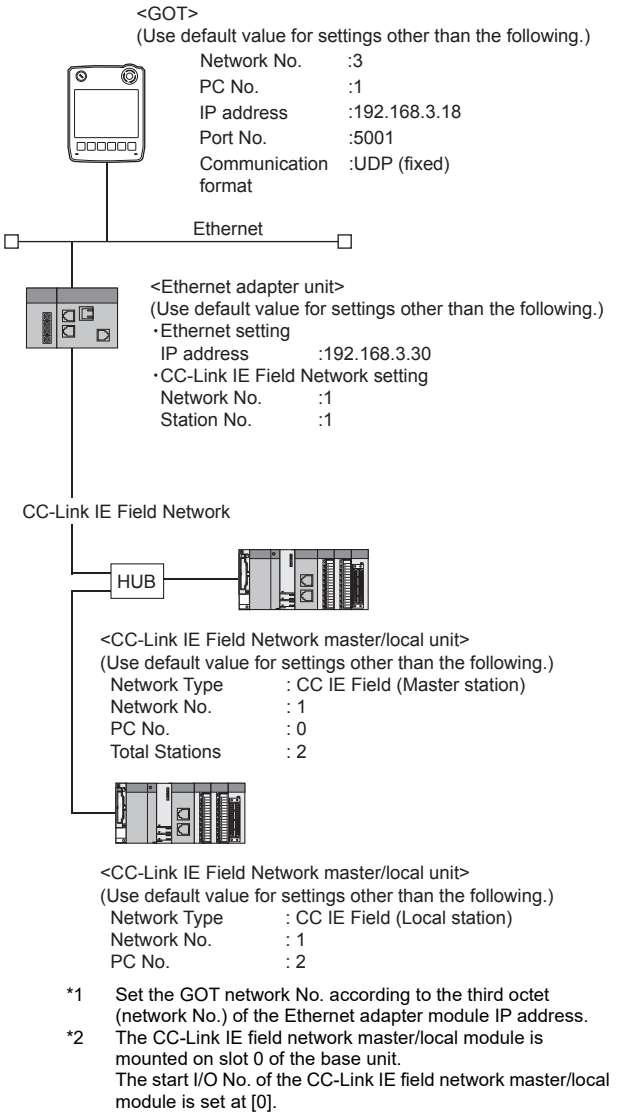

*1 Set the GOT network No. according to the third octet (network No.) of the Ethernet adapter module IP address.

*2 The CC-Link IE field network master/local module is mounted on slot 0 of the base unit.
The start I/O No. of the CC-Link IE field network master/local module is set at [0].

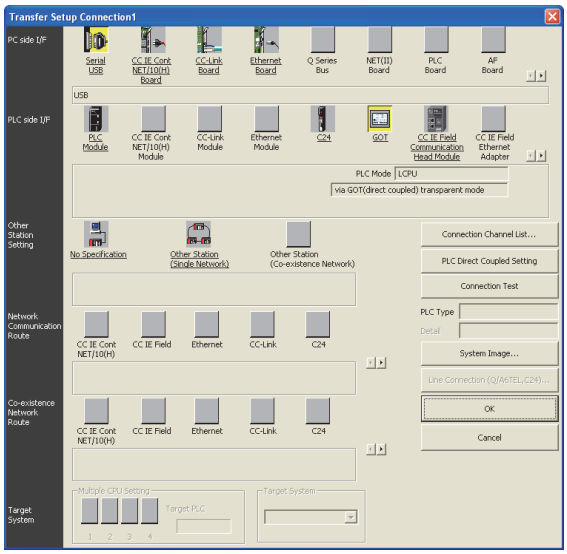

1. Click the Connection Destination view → [Connection Destination] → [(Connection target data name)] in the Navigation window of GX Works2.

2. The [Transfer Setup] is displayed.

3. Set the [Transfer Setup]:
PC side I/F: Serial USB
PLC side I/F: GOT
Other station: No specification

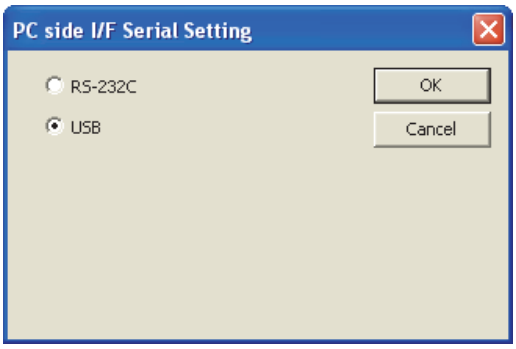

4. Double-click [Serial USB] of the PC side I/F to display [PC side I/F Serial Setting].

5. Check the following for [PC side I/F Serial Setting].

When connecting the GOT and PC with USB
Mark the [USB] checkbox.

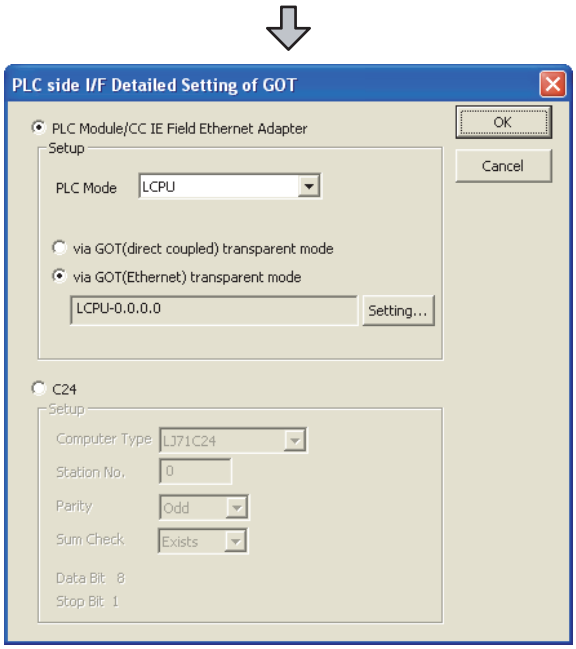

6. Double-click [GOT] of the PLC side I/F to display [PLC side I/F Detailed Setting of GOT].

7. Set the [CPU mode] to [LCPU] for [PLC side I/F Detailed Setting of GOT].
ark the [via GOT (Ethernet) transparent mode] checkbox and click [Set].

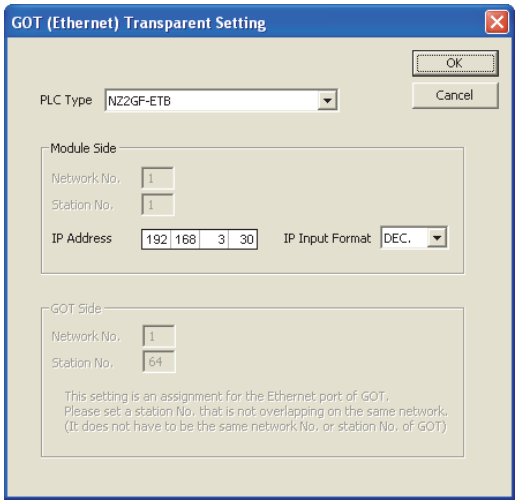

8. By clicking [Set], the [GOT (Ethernet) transparent setting] is displayed.
Here, set the built-in Ethernet port QCPU or Ethernet module, which is firstly connected via a GOT.

9. Set [NZ2GF-ETB] for [PLC Type].
Set the same number to [IP address] as the number assigned to NZ2GF-ETB, and click [OK].
In the system configuration example, the setting is as follows.
[IP address]: 192 168 3 30

10. Return to [PLC side I/F Detailed Setting of GOT] and click [OK].

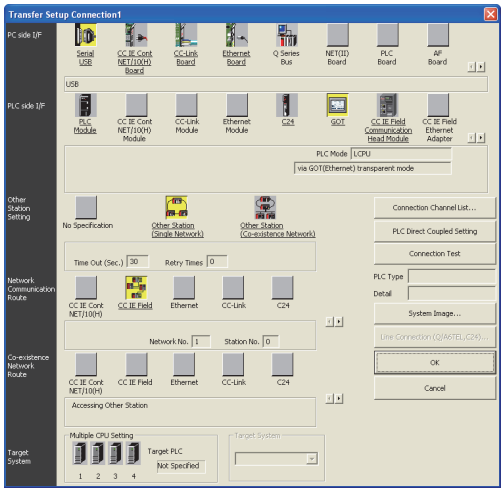

11. The [Transfer Setup] is displayed. Click [Other Station (Single Network)].

12. Double-click [CC IE Field].

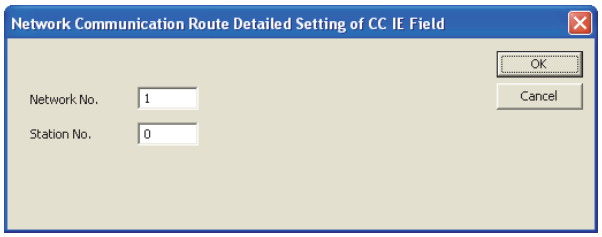

13. [Network Communication Route Detailed Setting of CC IF Field] is displayed.

14. Set [Network No.] and [Station No.] assigned to the CPU, and click [OK].
When connecting to CC-Link IE field network master/local module of the system configuration example, the setting is as follows.
[Network No.]: 1
[Station No.]: 0

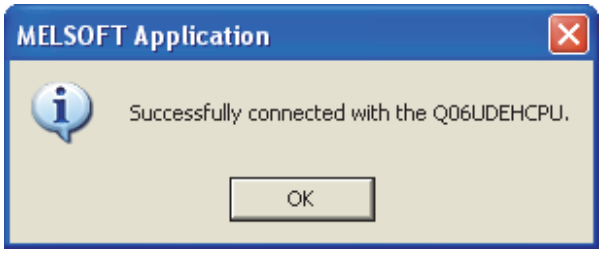

15. The screen returns to [Transfer Setup]. Click Connection Test to check if GX Developer has been connected to the QCPU (Q mode).

(1) Connecting the GOT and PLC in computer link connection (when connecting to QJ71C24(N))

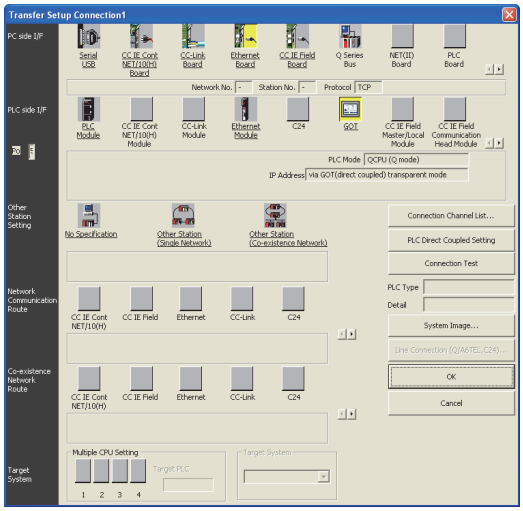

1. Click the Connection Destination view → [Connection Destination] → [(Connection target data name)] in the Navigation window of GX Works2.

2. The [Transfer Setup] is displayed.

3. Set the [Transfer Setup]:
PC side I/F: Ethernet Board
PLC side I/F: GOT
Other station: No specification

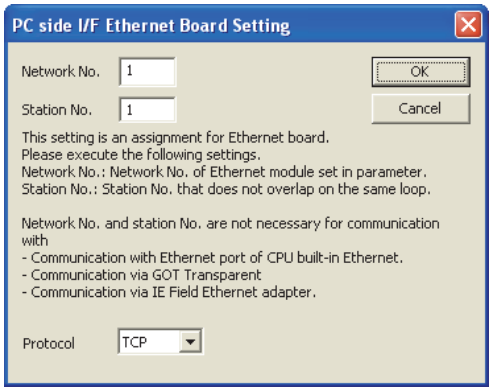

4. Double-click [Ethernet Board] of the PC side I/F to display [PC side I/F Ethernet Board Setting].

5. Set the protocol to TCP. Network No. and Station No. are not required to be changed (default) because they are not used.

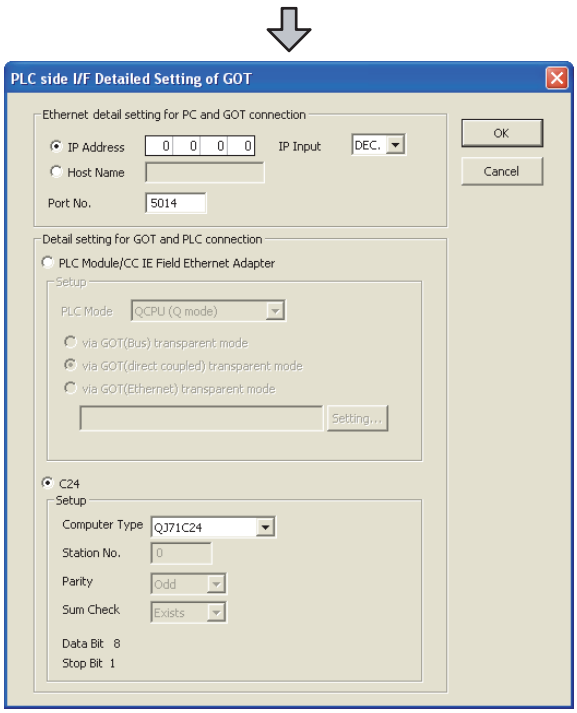

6. Double-click [GOT] of the PLC side I/F to display [PLC side I/F Detailed Setting of GOT].

7. Set the IP address and port No. in [Ethernet detail setting for PC and GOT connection].
Set the IP address and port No. to the same as the one in the Ethernet download setting.
31.5.1 Setting communication interface

8. Check-mark [C24] in [PLC side I/F Detailed Setting of GOT].

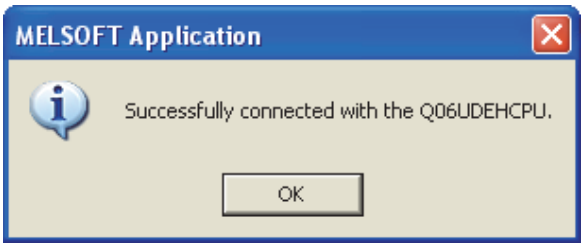

9. The screen returns to [Transfer Setup]. Click Connection Test to check if GX Developer has been connected to the QCPU (Q mode).

31.6.5 Accessing by GX LogViewer

The following shows the procedure to set the FA transparent function of GX LogViewer.

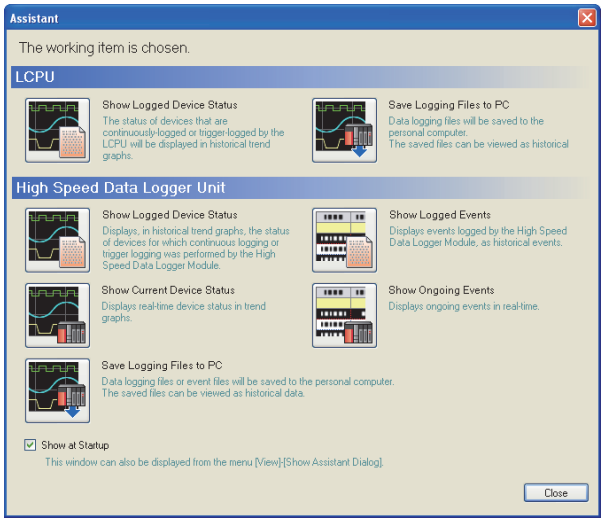

1. Click [Show Assistant Dialog] for [View] on GX LogViewer.

2. The [Assistant] dialog box is displayed.

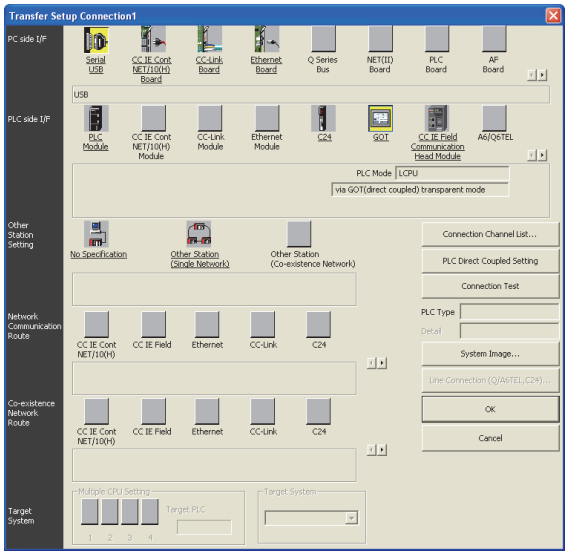

3. Click [LCPU] → [Show Logged Device Status] in the [Assistant] dialog box.

4. The [Transfer Setup] dialog box is displayed.

5. Set the [Transfer Setup]:
PC side I/F: Serial USB
PLC side I/F: GOT
Other Station Setting: (Select from the system configuration)

6. For [PC side I/F Serial Setting] and [PLC side I/F Detailed Setting of GOT] of [Transfer Setup], refer to the following.
31.6.4 Accessing by GX Works2

31.6.6 Accessing PLC by FX GX Configurator-QP

The following shows the procedure to set the FA transparent function of GX Configurator-QP.

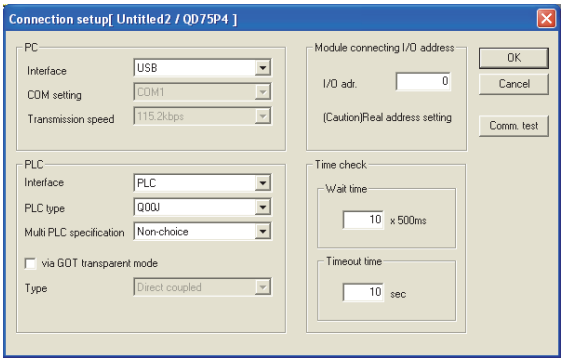

1. Click [Transfer setup] for [Online] on GX Configurator-QP.
2. The [Transfer Setup] is displayed.
3. Set the following in [PC] in [Connection setup].

When connecting the GOT and PC with USB
Interface: USB

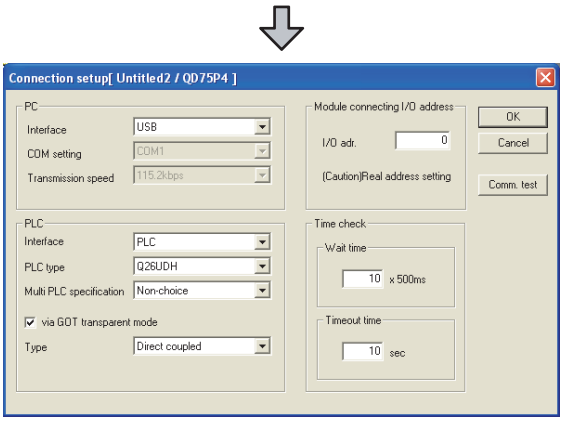

4. Set the [PLC] in [Connection setup].
PLC type: Q series PLC type
Multi PLC specification: Non-choice/No.1 to 4
Mark the [via GOT transparent mode] checkbox.

Direct CPU connection
Interface: PLC
Type: Direct coupled

Computer link connection
Interface: C24

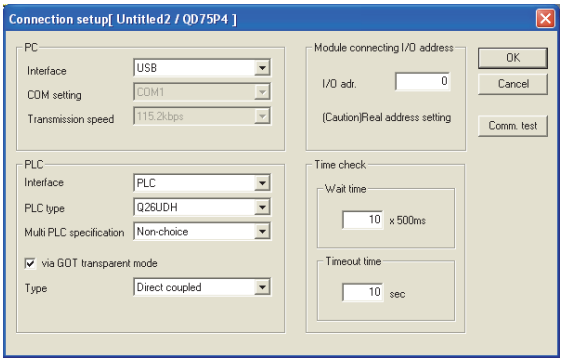

5. Set the [Module connecting I/O address] in [Transfer setup].
Specify the actual I/O address of the module.

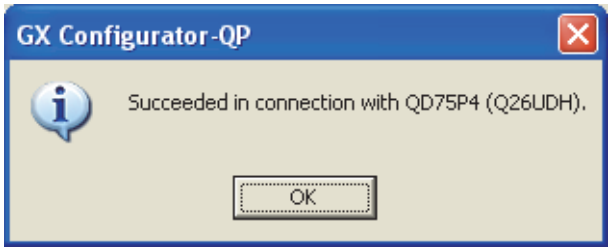

6. The screen returns to the [Transfer setup]. Click the Connection Test to check if GX Developer has been connected to the QD75*** (QnCPU).

31.6.7 Accessing by the MT Developer

This section explains the procedure to set the FA transparent function of MT Developer with an example of connecting to motion controller CPU (Q series).

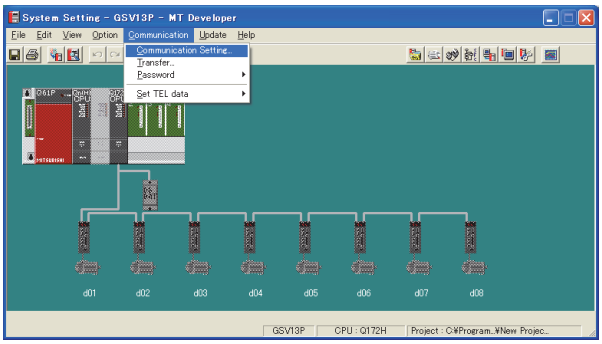

1. Click [Communication] → [Communication Setting] in MT Developer.

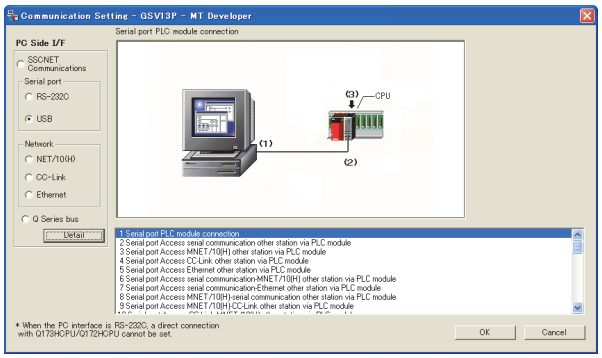

2. Check-mark the following in [Serial port].

When connecting the GOT and PC with USB
Mark the [USB] checkbox.

3. Click [Detail].

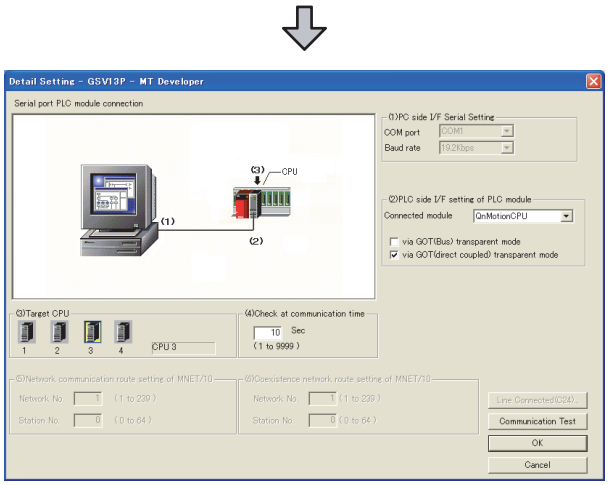

4. Check-mark the following in [PLC side I/F Detailed setting of PLC module].

Direct CPU connection
[via GOT (direct coupled) transparent mode]

5. As necessary, select a CPU that is targeted by using the transparent function in [CPU].

6. Click Connection Test.

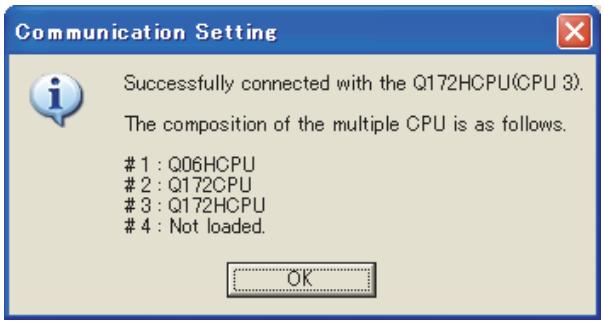

7. Confirm that the PC is connected to the motion controller CPU (Q series).

31.6.8 Accessing by MT Works2

This section explains the procedure to set the FA transparent function of MT Works2 with an example of connecting to motion controller CPU (Q series).

■ When connecting the GOT and personal computer with USB

(1) Connecting the GOT and PLC in direct CPU connection

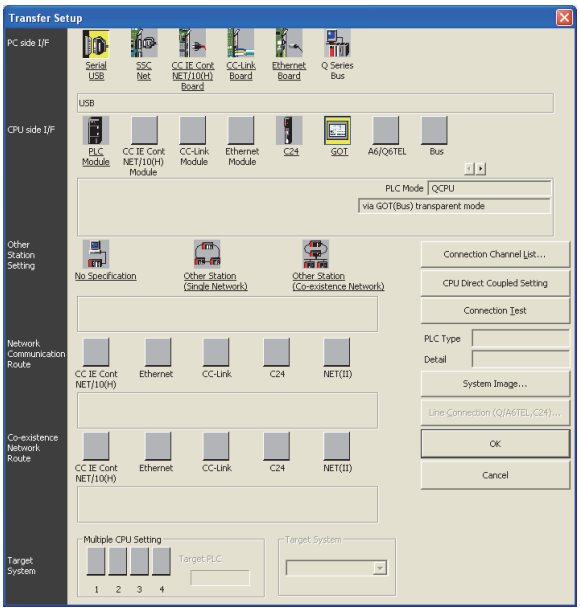

1. Click [Transfer setup] → [Online].
2. The [Transfer Setup] is displayed.
3. Set the [Transfer Setup]:
   PC side I/F: Serial USB
   PLC side I/F: GOT
   Other station: No specification

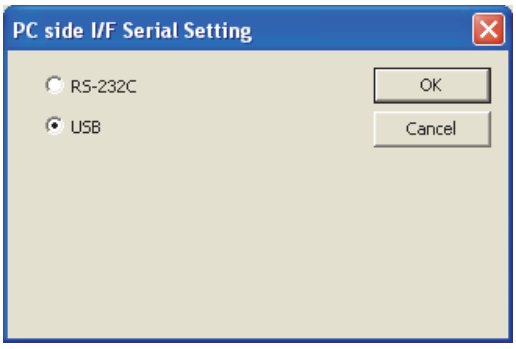

4. Double-click [Serial] of the PC side I/F to display [PC side I/F Serial setting].

5. Check the following for [PC side I/F Serial Setting].

When connecting the GOT and PC with USB

Mark the [USB] checkbox.

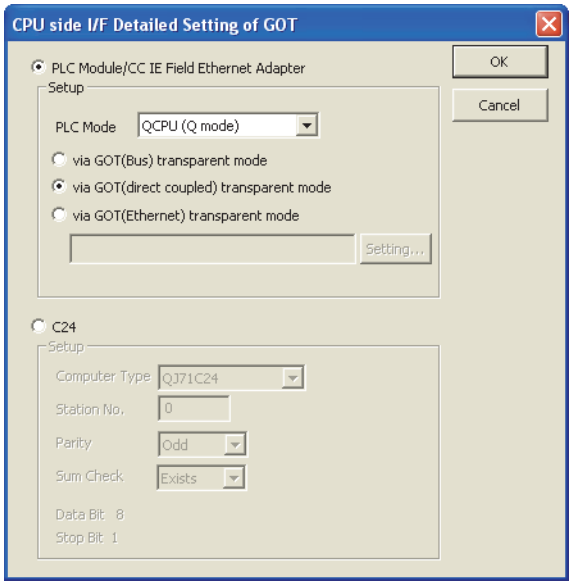

6. Double-click [GOT] of the CPU side I/F to display [CPU side I/F Detailed Setting of GOT].

7. Check-mark the following in [CPU side I/F Detailed Setting of GOT].

Direct CPU connection

Mark the [via GOT (direct coupled) transparent mode] checkbox.

Ethernet connection

Mark the [via GOT (Ethernet) transparent mode] checkbox and click [Set].
[GOT (Ethernet) transparent setting] is displayed. Set it according to the system configuration.

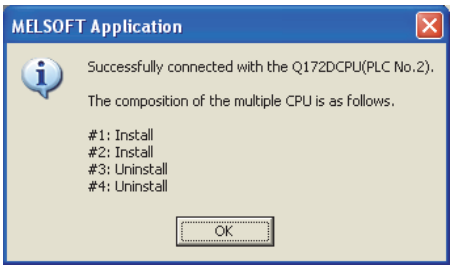

8. The screen returns to [Transfer setup]. Click Connection Test to check if GX Developer has been connected to the motion controller (Q mode).

31.6.9 Accessing the servo amplifier by the MR Configurator

Make the FA transparent settings in the communication setting of MT Developer.

For details of MT Developer, refer to the following.

☞ 31.6.7 Accessing by the MT Developer

31.6.10 Accessing the servo amplifier by the MR Configurator2

Make the FA transparent settings in the MT Works2 communication settings.

For details of MT Works2, refer to the following.

☞ 31.6.8 Accessing by MT Works2

31.6.11 Accessing the inverter by the FR Configurator

This section explains the setting method of the FA transparent function of FR Configurator with an example of connecting to FREQROL A700/F700 series.

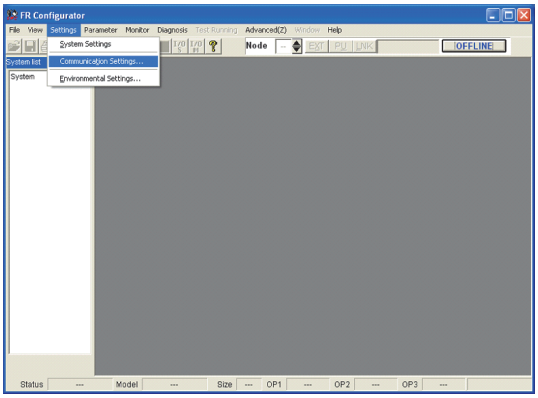

1. Click [Settings] → [Communication Settings...] in FR Configurator.

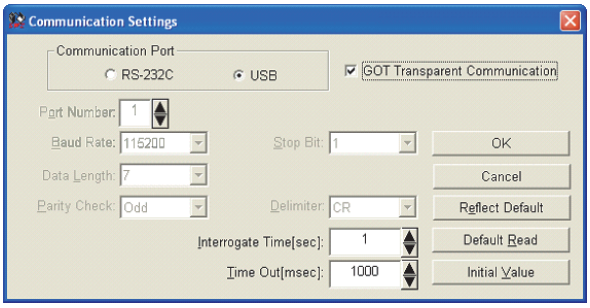

2. Check-mark the following in [Communication port].

When connecting the GOT and PC with USB

Mark the [USB] checkbox.

3. Check-mark the [GOT Transparent Communication].

4. Click the [OK].

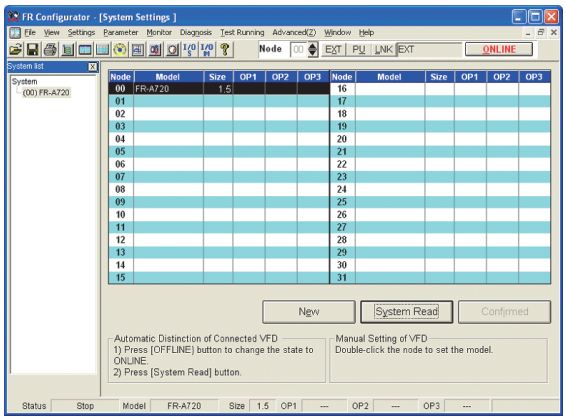

5. Click [OFFLINE] to make it [ONLINE].

6. Click the [System Read], and then check if GOT has been connected to FREQROL A700/F700 series normally.

31.6.12 Accessing PLC by FX Configurator-FP

This section explains the procedure to set the FA transparent function of FX Configurator-FP with an example of connecting to FXCPU.

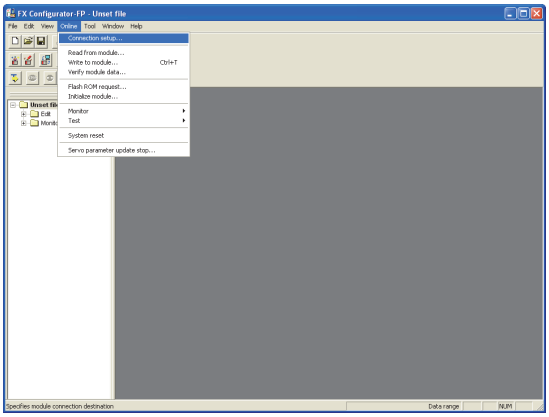

1. Click [Connection setup] for [Online] on FX Configurator-FP.

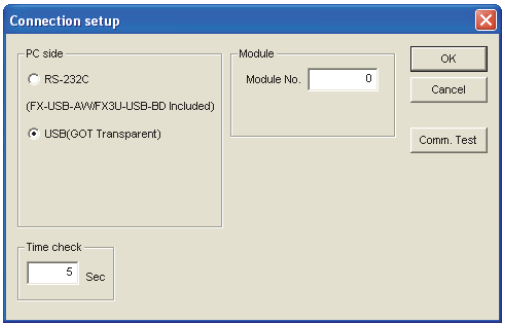

2. Check-mark the following in [PC side].

When connecting the GOT and PC with USB

Mark the [USB (GOT transparent mode)] checkbox.

3. Click [Comm. Test].

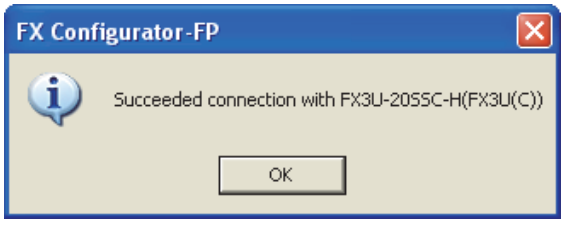

4. The communication test is executed. Check that the GOT is correctly connected to the FXCPU.

31.6.13 Accessing by FX3U-ENET-L Configuration tool

This section explains the procedure to set the FA transparent function of the FX3U-ENET-L Configuration tool.

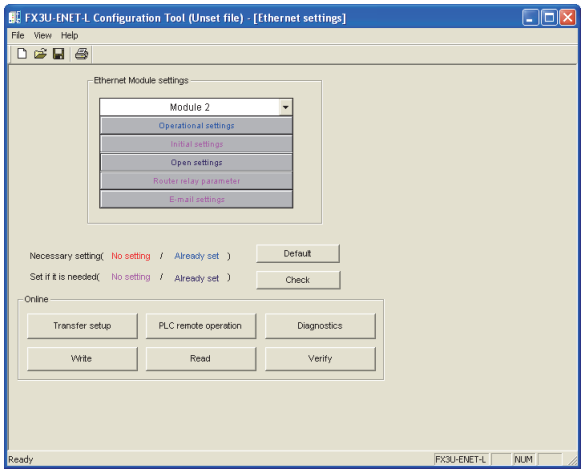

1. Click [Transfer setup] on the FX3U-ENET-L Configuration tool.

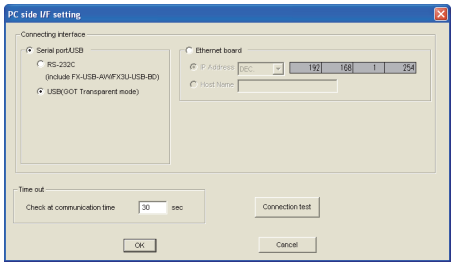

2. Mark the [Serial port/USB] checkbox in [Connecting interface].

When connecting the GOT and PC with USB

Mark the [USB] checkbox.

3. Click [Comm. Test].

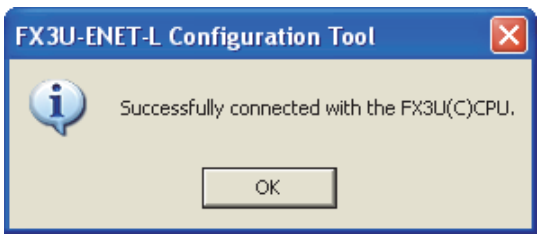

4. The communication test is executed. Check that the GOT is correctly connected to the FXCPU.

31.6.14 Accessing by RT ToolBox2

This section explains the procedure to set the FA transparent function of RT ToolBox2 with an example of connecting to CRnQ-700.

■ Connecting the GOT and controller in direct CPU connection (CRnQ-700 only)

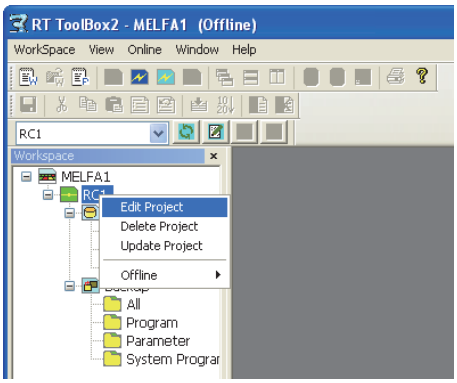

1. Right-click a project name to be a target on the project tree of RT ToolBox2.
   Click [Edit Project].

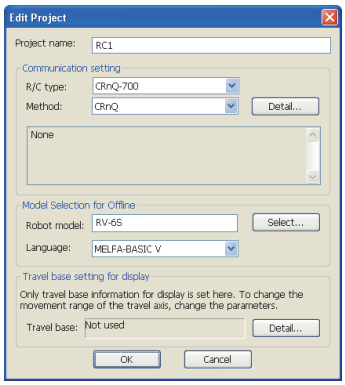

2. Set [Method] to [CRnQ].
3. Click [Detail].

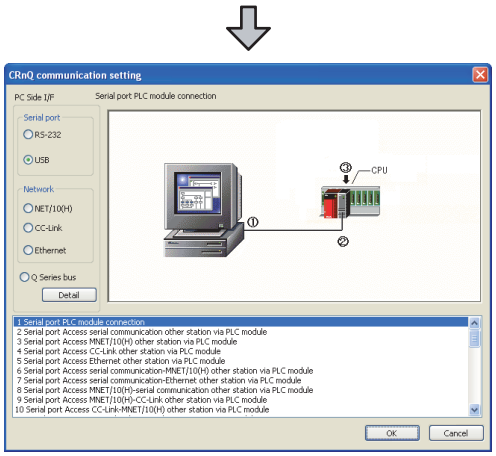

4. Check-mark the following in [Serial port].

   When connecting the GOT and PC with USB

   Mark the [USB] checkbox.

5. Click [Detail].

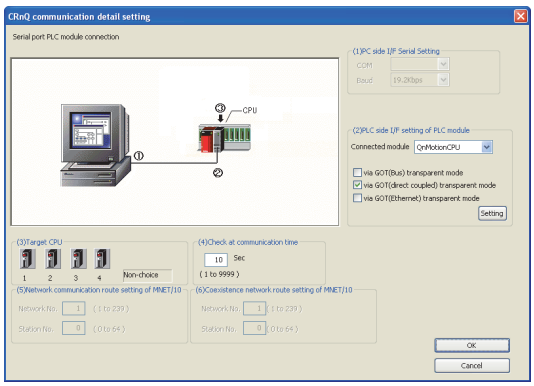

6. Check-mark the following in [PLC side I/F Detailed setting of PLC module].

   Direct CPU connection

   [via GOT (direct coupled) transparent mode]

7. As necessary, select a CPU that is targeted in [CPU].

■ Connecting the GOT and controller in Ethernet connection

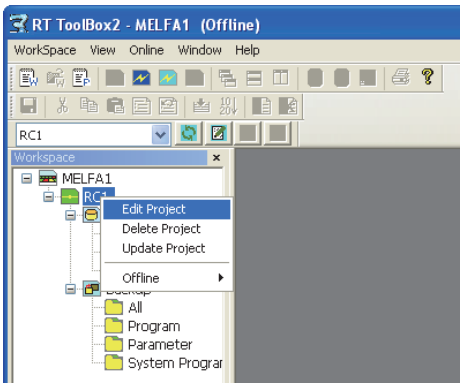

1. Right-click a project name to be a target on the project tree of RT ToolBox2.
Click [Edit Project].

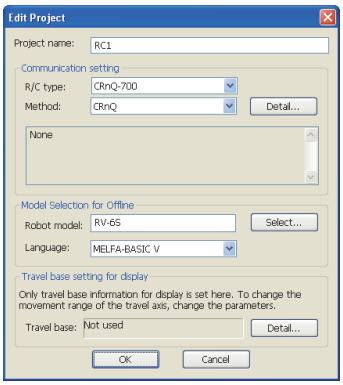

2. Set [Method] to [CRnQ].

3. Click [Detail].

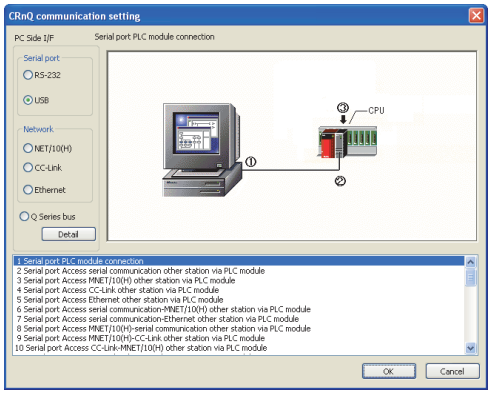

4. Check-mark the following in [Serial port].

When connecting the GOT and PC with USB

Mark the [USB] checkbox.

5. Click [Detail].

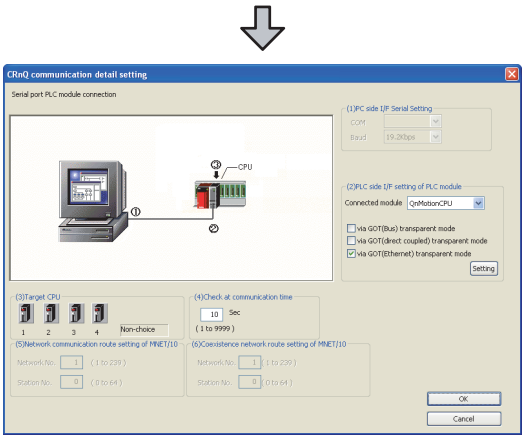

6. Check-mark the following in [PLC side I/F Detailed setting of PLC module].

Ethernet connection

[via GOT (Ethernet) transparent mode]

7. Clicking [Setting]. The [GOT (Ethernet) transparent setting] is displayed.

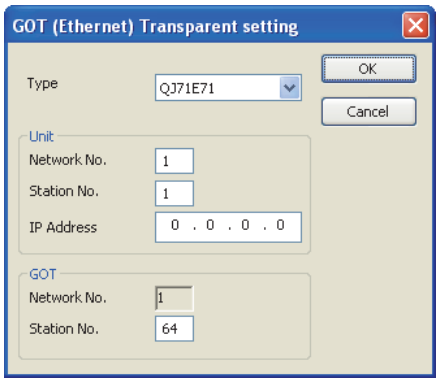

8. Set [Type] to [QJ71E71].

9. Specify the numbers assigned to the Ethernet module for [Network No.], [Station No.] and [IP Address] in [Unit].

10. Specify the numbers assigned to the GOT for [Network No.] and [Station No.] in [GOT].

11. Return to [CRnQ communication detail setting] and select a CPU that is targeted in [Target CPU] as necessary.

31.6.15 Accessing by NC Configurator

The following shows the procedure to set the FA transparent function of NC Configurator.

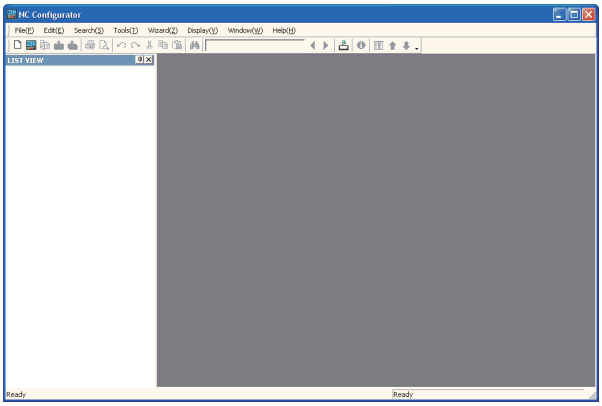

1. Click [File] → [Open].
2. The [Open] is displayed.

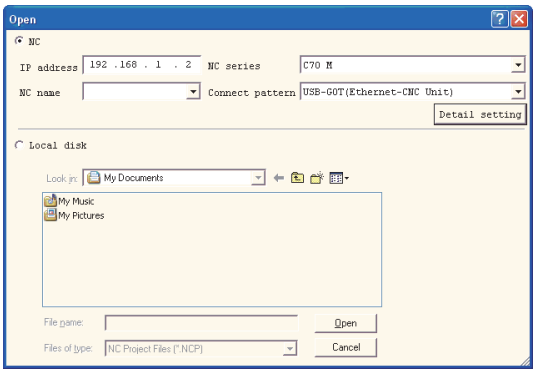

3. Select [NC] on the upper left of the screen, and set the following:
   NC series: C70 M or C70 L
   Connect pattern: Set the pattern according to the connect pattern.
   IP address: Set as necessary.
4. By clicking [Open], data is read from CNC and displayed.

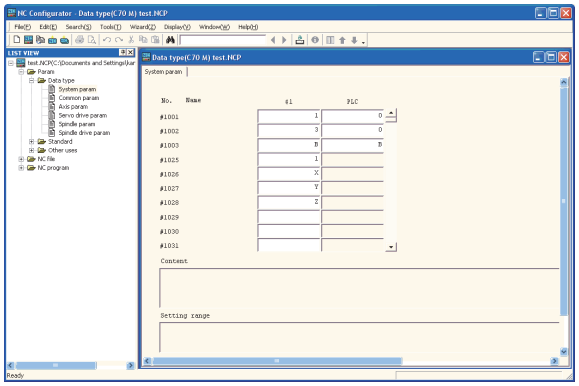

31.6.16 Accessing by MELSOFT Navigator

The following explains the procedure to set the FA transparent function of MELSOFT Navigator.

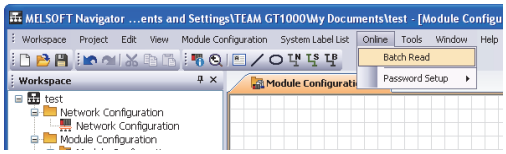

1. Click [Online] → [Batch Read].
2. The [Batch Read] is displayed.

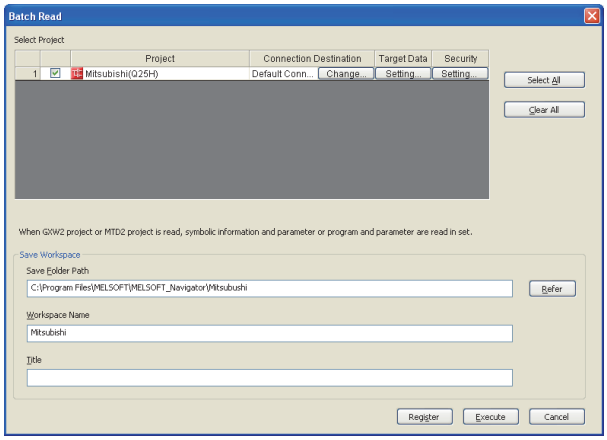

3. Select the projects to be read from [Select Project], and set the storage destination of the workspace in [Save Workspace].
4. Click [Execute] to read and display the specified project.

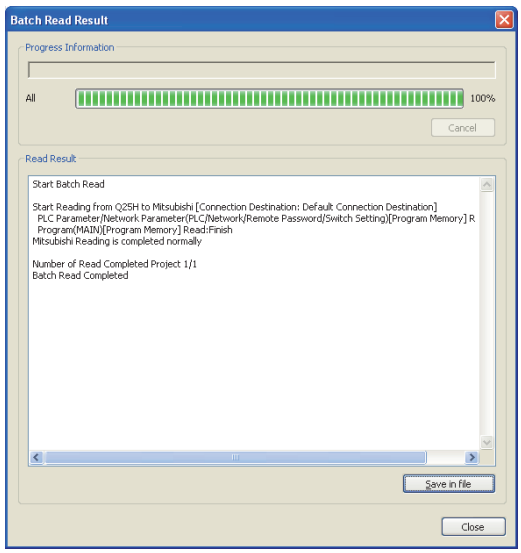

31.6.17 Accessing by the CPU Module Logging Configuration Tool

The following shows the procedure to set the FA transparent function of the QnUDVCPU•LCPU Logging Configuration Tool.

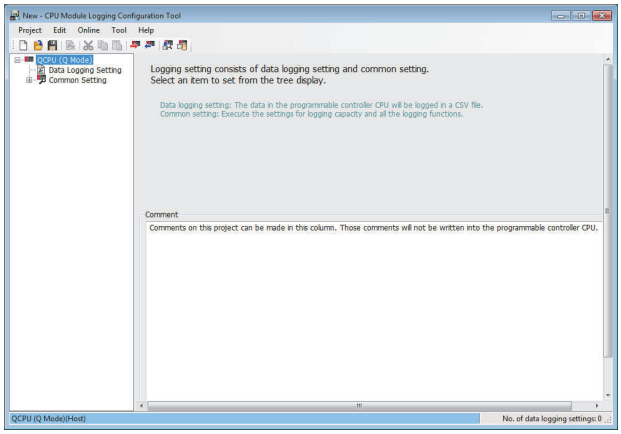

1. Click [Online] → [Transfer Setup...].
2. The [Transfer Setup] dialog box is displayed.

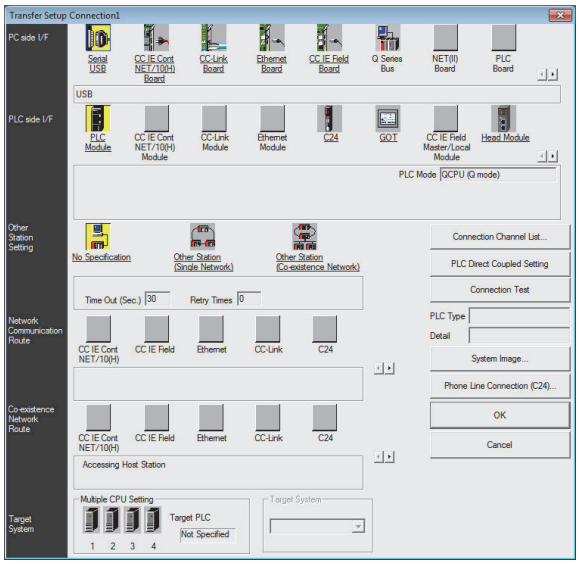

3. Set the [Transfer Setup]:
   PC side I/F: Serial USB
   PLC side I/F: GOT
   Other Station Setting: (Select from the system configuration)
4. Set [PC side I/F Serial Setting] and [PLC side I/F Detailed Setting of GOT] in [Transfer Setup].
   For details, refer to the following.
   31.6.4 Accessing by GX Works2

31.6.18 Accessing by Setting/ Monitoring tool for C Controller module

The following shows the procedure to set the FA transparent function of Setting/Monitoring tool for C Controller module (Q Series) with the C Controller module (Q24DHCCPU-V) connected.

■ When connecting the GOT and personal computer with USB

(1) When connecting the GOT and PLC in Ethernet communication

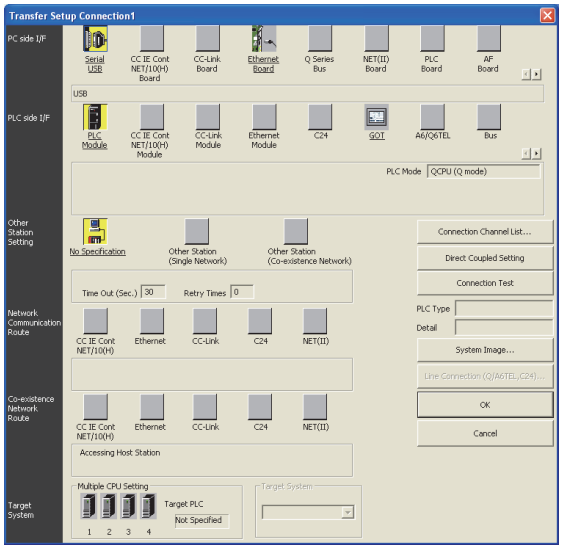

1. Click [Transfer setup] → [Online].
2. The [Transfer Setup] is displayed.
3. Set the [Transfer Setup]:
   PLC side I/F: GOT
   Other station: No specification

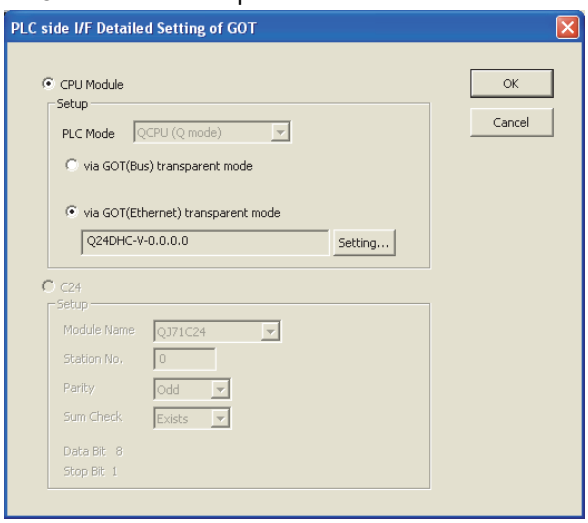

4. Double-click [GOT] of the CPU side I/F to display [CPU side I/F Detailed Setting of GOT].

5. On the [PLC side I/F Detailed Setting of GOT], mark the [via GOT(Ethernet) transparent mode] checkbox.

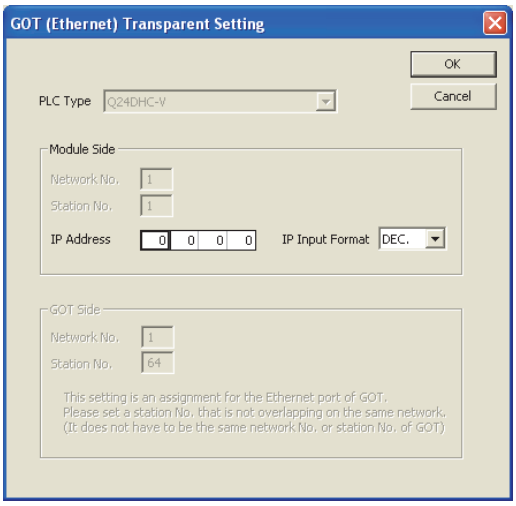

6. By clicking [Set], the [GOT (Ethernet) transparent setting] is displayed.
Here, set the C Controller module (Q Series) (Q24DHCCPU-V), which is firstly connected via a GOT.

7. Specify the IP address assigned to the C Controller module (Q Series) (Q24DHCCPU-V) for [IP Address].

8. The screen returns to [Transfer Setup]. Click Connection Test to check if Setting/Monitoring tool for C Controller module has been connected to the C Controller module (Q Series) (Q24DHCCPU-V).

31.7 Precautions

31.7.1 Precautions common to each software

■ GOT interface required to use the FA transparent function

Connect the PC, to which GX Developer or any other relevant software has been installed, to the USB interface of the GOT.

When performing the FA transparent function, use the USB interface of the GOT.

The FA transparent function cannot be used in other communication interfaces.

■ Conditions for suspending the FA transparent function

The FA transparent function is also suspended when any of the following operations, which stop the GOT monitor, is performed.

Note that the FA transparent function will not be stopped while using the optional function such as the Utility display or ladder monitor function.

- When project data is written/read, or when the OS is written by GT Designer3[*1]
- When the GOT is set up[*1]
- When no communication request (online monitor, etc.) has been issued from GX Developer for 45 minutes

*1 A timeout error occurs in GX Developer.

■ When GOT monitoring is faulty

The FA transparent function cannot be used in case that the GOT monitoring is faulty due to PLC CPU errors or faulty communication between the PLC CPU and GOT.
When GOT monitoring is faulty, check the following.

(1) Whether the PLC CPU operates normally

☞ Refer to the User's Manual of the PLC CPU you use.

(2) Whether the PLC CPU and GOT are connected normally

☞ 21. DIRECT CONNECTION TO CPU
☞ 22. COMPUTER LINK CONNECTION

■ When monitoring the PLC CPU from a PC

When monitoring the PLC CPU from a PC, the GOT and PC refresh the display slower.

■ Software available for the FA tranparent function

When multiple kinds of software are activated on one PC, only one of them is available for communications using the FA transparent function.

Do not concurrently perform any communications using the FA transparent function.
(Offline operation with each software is available.)

Also, do not perform communications with the GOT (e.g. downloading project data) from GT Designer3 during execution of communications using the FA transparent function.

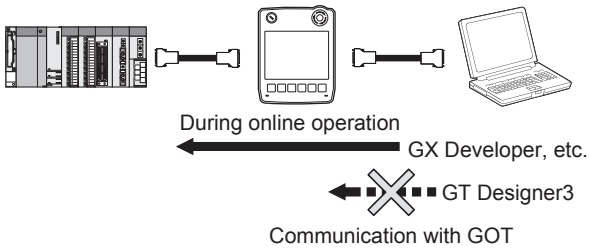

■ When PLC power disconnection occurs with the FA transparent function being used

While the FA transparent function is being used, if the communication between the PLC and the GOT is stopped due to PLC power disconnection or a disconnection of the communication cable between the PLC and the GOT, the GOT waits for timeout against the communication request from the peripheral devices (GX Developer, etc.), and it takes a few minutes to recover the monitoring between the PLC and the GOT.

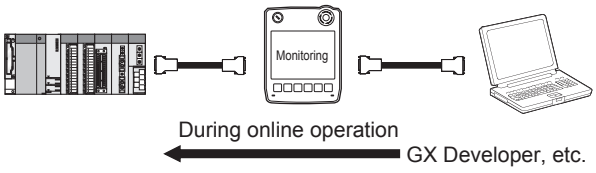

■ When the FA transparent function is used in an Ethernet connection

(1) GX Developer function or GX Works2 function
When the FA transparent function is used in an Ethernet connection, the following GX Developer functions or GX Works2 functions cannot be executed. The message [The executed function is not supported. Please check the manual and other documentation.] is displayed on GX Developer.

Unsupported functions	Remark
• Remote Reset • Remote system reset	-
• Remote RUN • Remote STOP • Remote PAUSE • Remote STEP-RUN • Remote latch clear • Write clock data • Clear malfunction log • Remote password function • CC-Link IE controller • Network diagnostics • Ethernet diagnostics (PING test/loopback test with the Ethernet module (Q series))	Inexecutable only when specify all stations/groups has been performed.

(2) GOT station monitoring function
When the FA transparent function is used in an Ethernet connection, GOT station monitoring function cannot be operated.
Therefore, in the cases of [no connection target], [PLC power OFF], etc., the monitoring of the GOT delays for the timeout time.

31.7.2 When using GX Works3, GX Works2, GX Developer

■ When connecting to QCPU (A mode)

When connecting to QCPU (A mode), set the PLC type to "A4UCPU" or "QCPU (A mode)" on GX Developer.

■ When [monitor conditions] have been set on GX Works3, GX Works2, GX Developer

(1) Monitoring performance of the GOT is temporarily suspended.

(2) The GOT cannot respond to the touch switch operation and numerical/ASCII inputs.

(3) Writing to PLC results in a system alarm occurrence and displays the message, "315 Device writing error. Correct device.".

(4) While setting the monitor conditions, do not perform any operation which makes the GOT restart (e.g. downloading project data, changing utility data). Doing so may display a system alarm, "402 Communication timeout. Confirm communication pathway or modules." when the GOT restarts.
When the monitor conditions setting for the PLC CPU has not been canceled, reconnect GX Works3, GX Works2, GX Developer to cancel the setting. (An error may be output when the monitor conditions setting is canceled.)

(5) When the time check of GX Works3, GX Works2, GX Developer is set to 30 seconds or more in the monitor condition settings, the message "402 Communication timeout. Confirm communication pathway or modules." may appear.
Set the time check time of GX Works3, GX Works2, GX Developer to 30 seconds or less.

■ When exiting GX Works3, GX Works2, GX Developer

For 45 seconds after GX Works3, GX Works2, GX Developer have been exited, the GOT continues monitoring at the same speed as when the FA transparent function is working.

■ When performing [Read to PLC], [Write to PLC] and other file operations on GX Works3, GX Works2, GX Developer

If any of the following GOT functions is executed during the file operation such as [Read to PLC] or [Write to PLC], an error may occur on the GOT, GX Works3, GX Works2, GX Developer.
In this case, take the following corrective action:

- File reading in the ladder monitor function for MELSEC-Q

Error messages on GOT	Corrective action on GOT side	Error messages on GX Developer and GX Works2	Corrective action on GX Developer and GX Works2
The file is not found.	With no file operation being executed on GX Developer or GX Works2, re-execute the file reading.	File access failure. Please retry.	With no file reading being executed in the ladder monitor function for MELSEC-Q, re-execute the file operation.

- Read/write of values of the file register specified for the recipe function

Error messages on GOT	Corrective action on GOT side	Error messages on GX Works3, GX Works2, GX Developer	Corrective action on GX Works3, GX Works2, GX Developer
358 PLC file access failure. Confirm PLC drive.*1	With no file operation on GX Works3, GX Works2, GX Developer, turn ON the trigger device for the recipe function again.	File access failure. Please retry.	Execute the file access operation again with the recipe in-process signal in GOT system information OFF.
		PLC file system error. Unable to communicate with PLC.	

*1 The numerical value indicates the system alarm No.

- Reading TC monitor set value in the system monitor function

Error messages on GOT	Corrective action on GOT side	Error messages on GX Works3, GX Works2, GX Developer	Corrective action on GX Works3, GX Works2, GX Developer
No message is displayed. (The TC set value space is blank.)	With no file operation being executed on GX Works3, GX Works2, GX Developer, re-execute the TC monitor.	File access failure. Please retry.	With no TC set value being read, re-execute the file operation.

- Reading the special module monitor CPU Malfunction log

Error messages on GOT	Corrective action on GOT side	Error messages on GX Works3, GX Works2, GX Developer	Corrective action on GX Works3, GX Works2, GX Developer
Communication error	With no file operation being executed on GX Works3, GX Works2, GX Developer, re-execute the CPU malfunction log reading.	File access failure. Please retry.	With no special module monitor CPU malfunction log being read, execute the file operation.

- Backup/restore

Error messages on GOT	Corrective action on GOT side	Error messages on GX Developer and GX Works2	Corrective action on GX Developer and GX Works2
Backup	With no file operation being executed on GX Developer or GX Works2, re-execute the backup.	-	With no backup being executed, execute the file operation.
Restore	With no file operation being executed on GX Developer or GX Works2, re-execute the restore.	-	With no restore being executed, execute the file operation.

- SFC monitor file reading

Error messages on GOT	Corrective action on GOT side	Error messages on GX Developer and GX Works2	Corrective action on GX Developer and GX Works2
-	With no file operation being executed on GX Developer or GX Works2, re-execute the file reading.	-	With no special module monitor CPU malfunction log being read, execute the file operation.

- Reading/Writing files of ladder edit

Error messages on GOT	Corrective action on GOT side	Error messages on GX Developer and GX Works2	Corrective action on GX Developer and GX Works2
Read	With no file operation being executed on GX Developer or GX Works2, re-execute the file reading.	-	With no file reading being executed on ladder edit, execute the file operation.
Write	With no file operation being executed on GX Developer or GX Works2, re-execute the file writing.	-	With no file writing being executed on ladder edit, execute the file operation.

■ When PLC write is failed while using the FA transparent function

The execution of PLC write using the FA transparent function may be failed due to some reason such as cable disconnection.

When this occurs, re-execute the PLC write from the same PC, or reset the PLC CPU.

■ Restrictions on GX Developer and GX Works2 during backup/restore execution

(1) When reading/writing data from/to a PLC, monitoring a PLC, and others are executed with GX Developer or GX Works2 with the FA transparent function during the backup/restore execution with the GOT, the backup/restore is stopped.
Check that reading/writing data from/to the PLC, monitoring the PLC, and others are not executed with GX Developer or GX Works2 with the FA transparent function. Execute the backup/restore with the GOT again.

(2) When the backup/restore is executed with the GOT while reading/writing data from/to a PLC, monitoring a PLC, and others are executed with GX Developer or GX Works2 with the FA transparent function, errors occur on GX Developer or GX Works2.
The backup/restore with the GOT is correctly executed.

31.7.3 When using MT Works2, MT Developer

■ When exiting MT Works2, MT Developer

For 45 seconds after MT Works2, MT Developer has been exited, the GOT continues monitoring at the same speed as when the FA transparent function is working.

■ When PLC write is failed while using the FA transparent function

The execution of PLC write using the FA transparent function may be failed due to some reasons such as cable disconnection.

When this occurs, re-execute the PLC write from the same PC, or reset the motion controller CPU.

■ When a cable disconnection has occurred

When the cable between the GOT and the motion CPU is disconnected, it takes time until a timeout error occurs in MT Works2, MT Developer.

31.7.4 When using MR Configurator2, MR Configurator

■ Unavailable functions and restrictions

For the use via the motion controller, there are unavailable functions and restrictions.

For details on the restrictions, refer to the help screen of MR Configurator.

■ Monitor speed of GOT

Since the FA transparent function is used via the motion CPU, the monitor speed of GOT is slow.

31.7.5 When using FR Configurator

■ GOT monitoring when using FA transparent function

When FA transparent function is used, GOT suspends monitoring on channels supporting FA transparent function.

POINT

Canceling the suspended GOT monitoring immediately

To cancel the suspended (45 seconds) GOT monitoring immediately after FA transparent is executed, input "1" to device GS457. Then GOT resumes monitoring.
If FA transparent is resumed even if "1" is already input to device GS457, an error will occur on FR Configurator.
For the details of the device, refer to the following manual.

☞ GT Designer3 Version1 Screen Design Manual

■ When using the oscilloscope function specified sampling

Since the monitoring of the inverter data may be not performed at the specified sampling intervals depending on the settings of oscilloscope function, adjust the communication setting, a sampling interval, etc.

■ PU mode operation command source selection

On the setting of PU mode operation command source selection (Pr:551) of the inverter, specify the terminal (1: RS-485 terminals, 2:PU connected) connected to GOT.

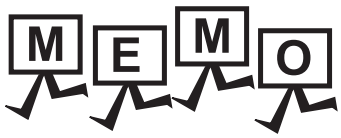
MEMO

APPENDICES

Appendix.1 External Dimensions

External dimensions of Handy GOT

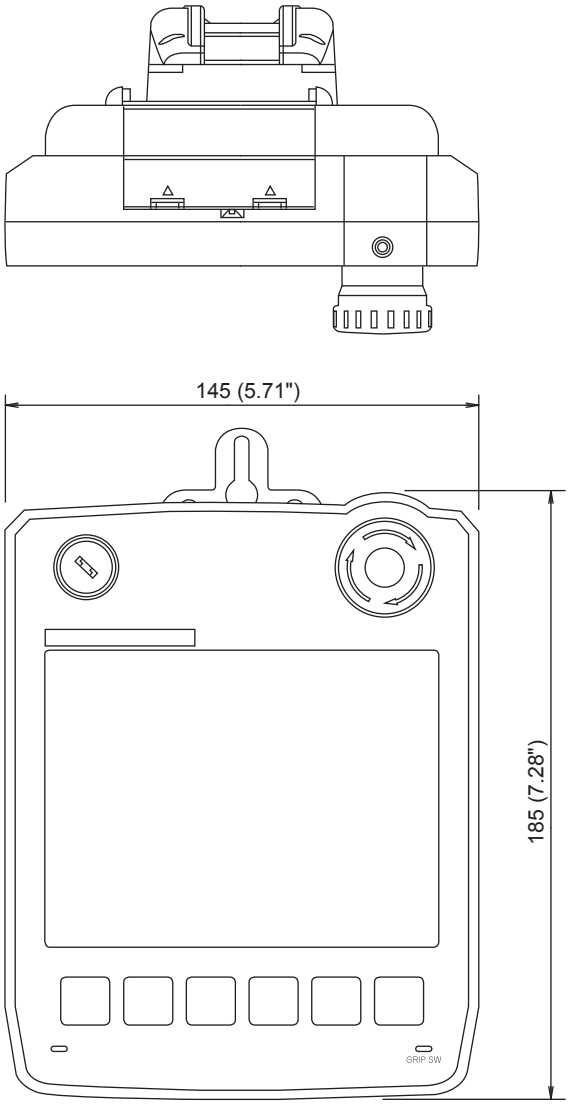

Unit: mm (inch)

External dimensions of external cables

GT14H-C□□□-42P

Unit : mm (inch)

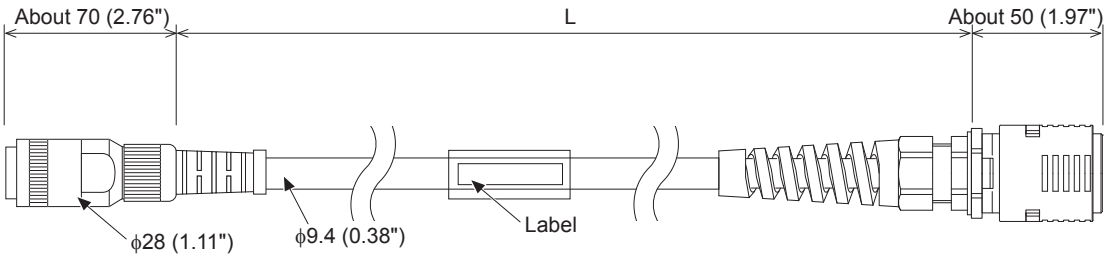

GT11H-C□□□-37P

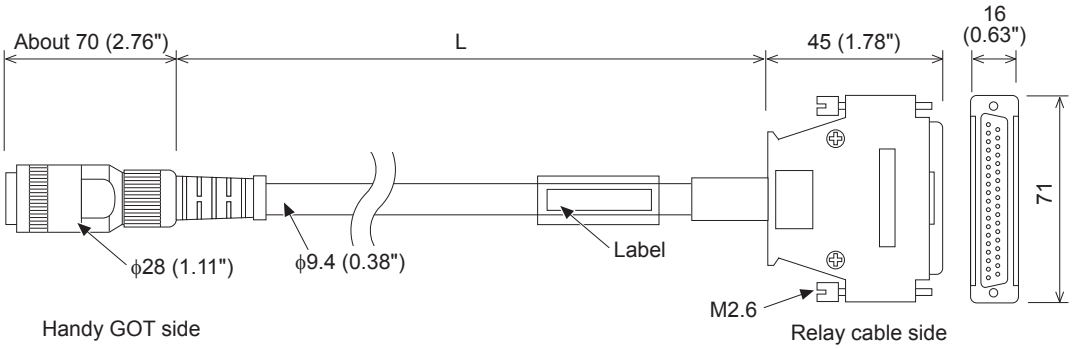

GT11H-C□□□

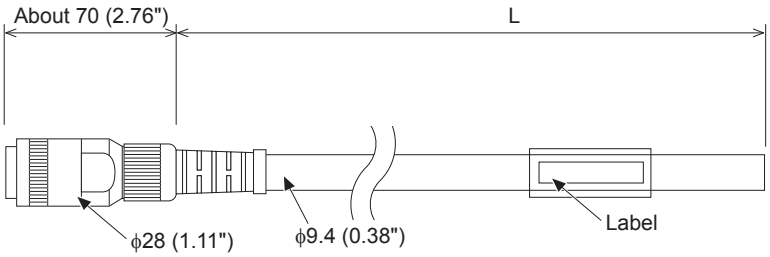

Value of □□□	Length L mm (inch)
30	3000 (118.11")
60	6000 (236.22")
100	10000 (393.7")

GT11H-C□□□-32P

Unit : mm (inch)

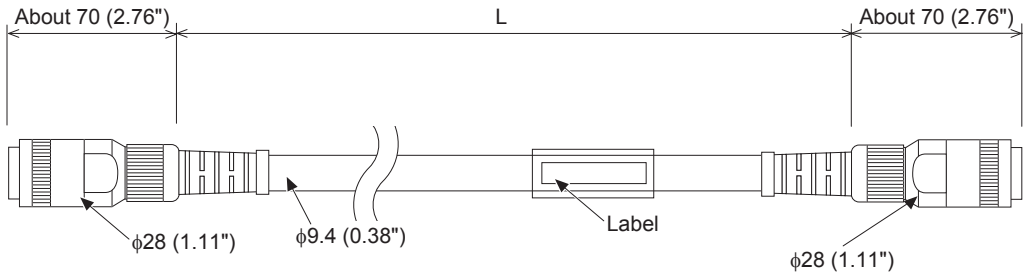

Handy GOT side

CC-Link interface unit side

Value of □□□	Length L mm (inch)
30	3000 (118.11")
50	5000 (196.85")
80	8000 (314.96")
130	13000 (511.81")

External dimensions of relay cables

GT11H-

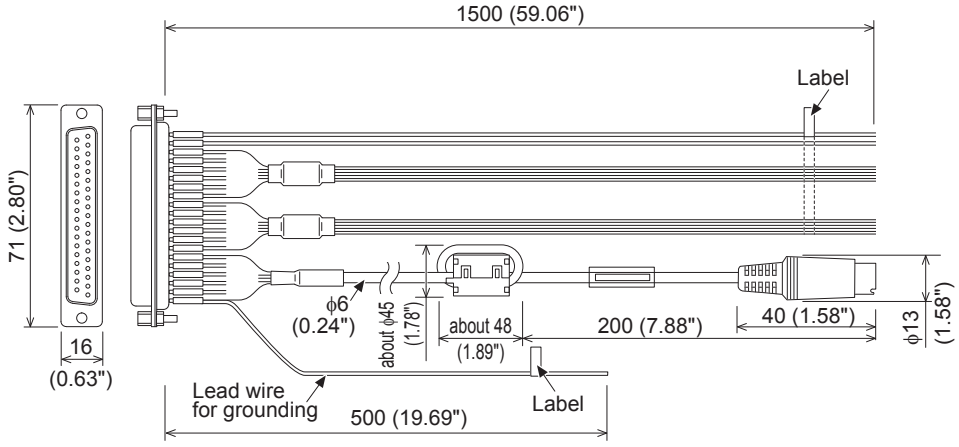

GT11H-C15R4-25P

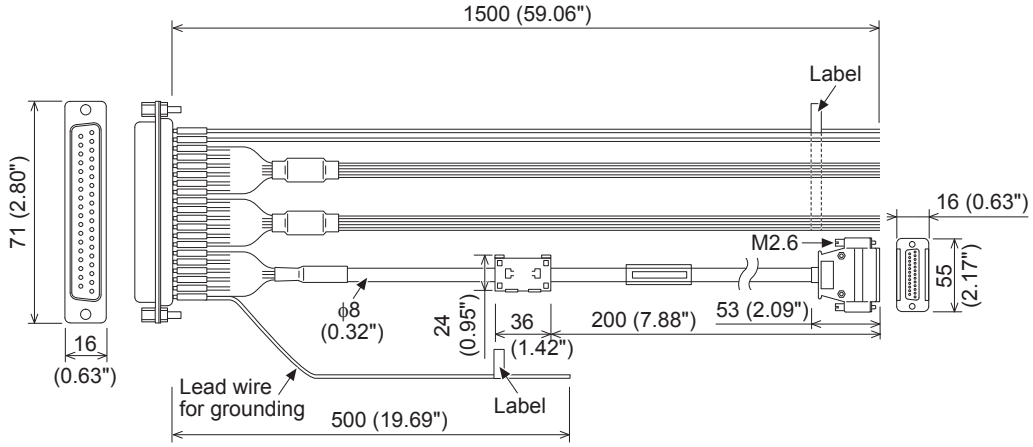

GT11H-

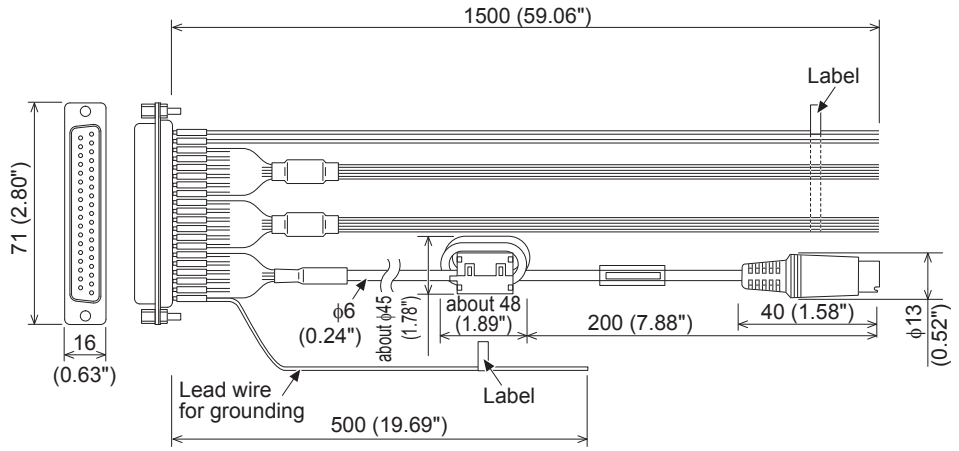

External dimensions of Connector Conversion Box

GT16H-CNB-42S

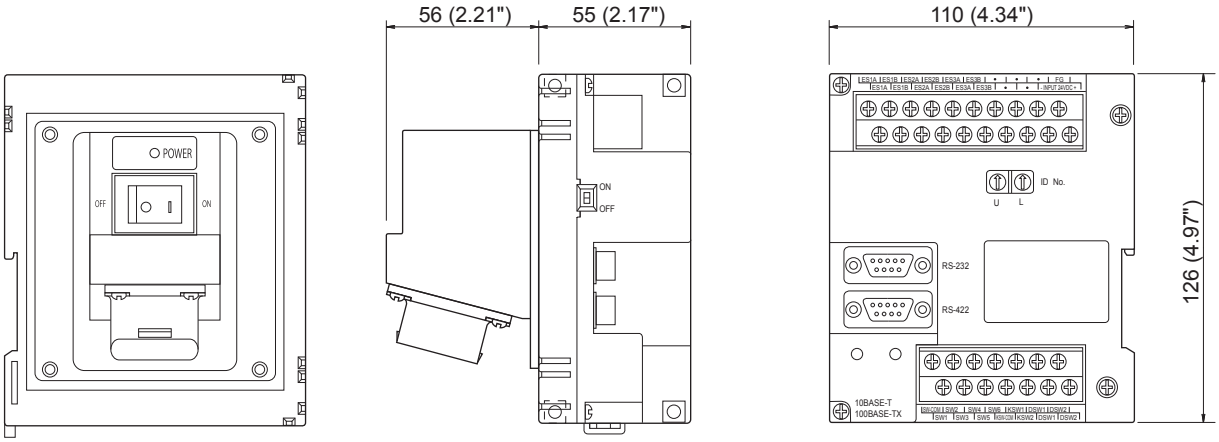

GT16H-CNB-37S

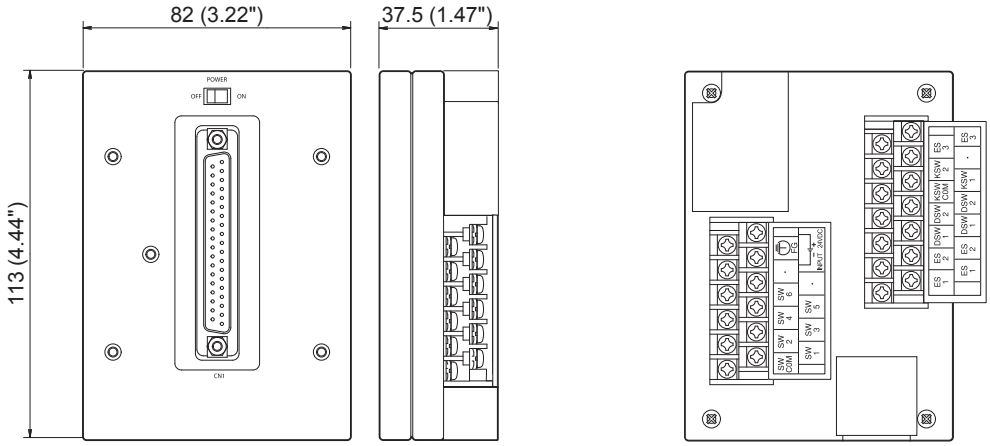

GT11H-CNB-37S

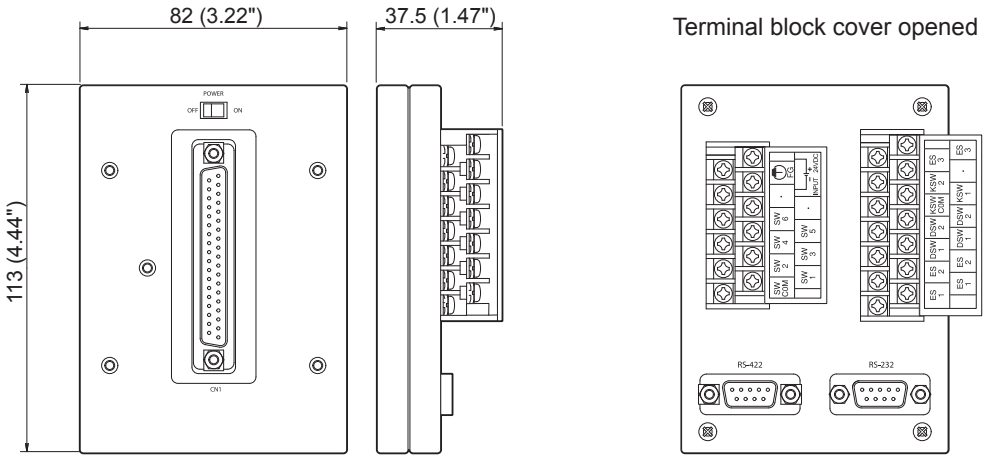

External dimensions of Connector Conversion Box Mounting Bracket

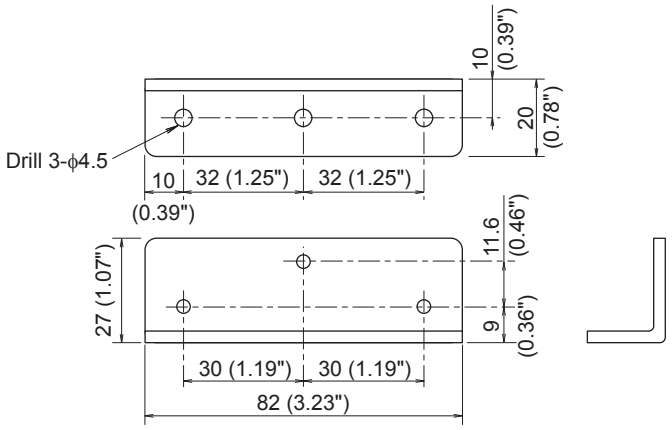

External dimensions of With wall-mounting Attachment

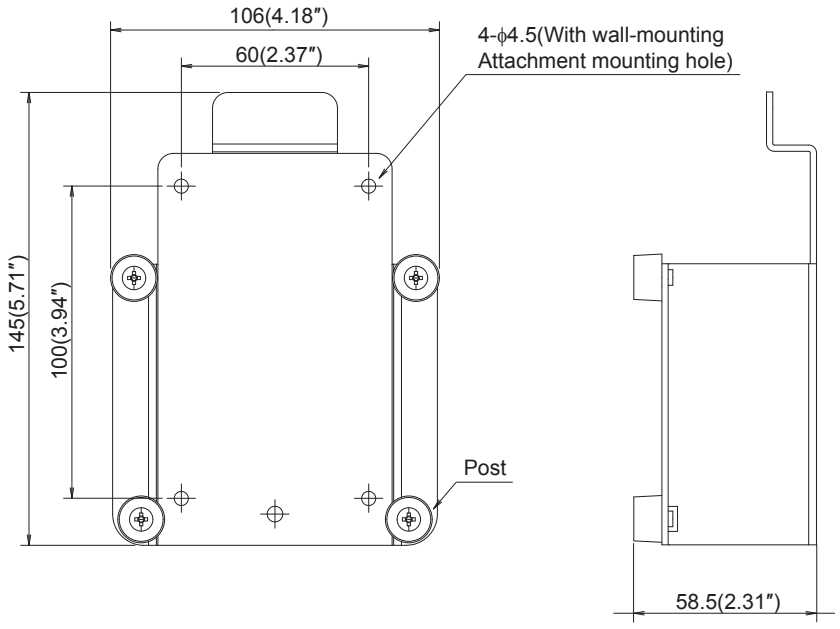

Unit:mm(inches)

Appendix.2 Usage Condition of Utility Function

The function which can be used differs according to the GOT type.
Moreover, there are the function which can be set with drawing software and the function which cannot be set.

○: Applicable ×: Not applicable - : Not required

Item			Functions overview	GT16 Handy	GT14 Handy	GT11 Handy	Reference
GOT setup	GOT main unit setup	Time setting	Selecting a base clock	○	○	○	○
			Displaying and setting the clock current time	○	○	○	×
			Displaying the battery status	○	○	○	×
		Transparent mode settings	Setting the channel No. to be used for the communication for the FA transparent function	○	○	×	○
		Clean	Displaying the screen for cleaning the display	○	○	○	×
		Video/RGB Setting	Setting the video display and RGB display	×	×	×	○
		Multimedia setting	Displaying the screen for setting the multimedia	×	×	×	○
		License management	Displaying the screen for license registration and deregistration	○	○	×	○
		Behavior of duplicate IPs	Setting the GOT operation when a device with the same IP address as that of the GOT is added to the network afterwards.	○	○	×	×
	Display		Switching message languages	○	○	○	○
			Setting the startup screen display time and screen saving time	○	○	○	○
			Setting the backlight to ON or OFF during screen saving	○	○	○	○
			Setting the battery alarm display to ON or OFF	○	○	○	○
			Setting the detect level/detect time of human sensor	×	×	×	×
			Adjusting brightness and contrast	○	○	○	×
	Operation		Setting the buzzer volume and window move buzzer	○	○	○	○
			Setting the key sensitivity and key reaction speed	○	○	○	×
			Setting the touch detection mode	○	×	×	×
			Changing security levels	○	○	○	×
			Setting the utility call keys	○	○	○	○
			Adjusting the touch panel	○	○	○	×
			Setting the USB mouse/keyboard	○	○	×	×
			Setting the SoftGOT-GOT link function	○	○	×	○
			VNC® server function setting	○	○	×	×
	GOT maintenance	Maintenance timing setting	Setting the maintenance notification times for the backlight and display Setting the number of maintenance notifications for touch keys and the built-in flash memory	○	×	×	×
		Addition times reset	Resetting accumulated hours and counts for maintenance time notifications	○	×	×	×
		GOT start time	Displaying the GOT start date and time, current time, and accumulated operating hours	○	○	○	×
Communication setting			Assigning channel numbers and communication drivers to communication interfaces.	○	○	○	○
	Communication setting	Communication setting	Setting communication parameters	○	○	○	○
			Setting or deleting sequence program protection key words, canceling sequence program protection status (When connecting to FX series CPU)	○	○	○	×
		Ethernet setting	Displaying the contents of Ethernet setting,changing the host	○	○	×	○

○: Applicable ×: Not applicable - : Not required

Item			Functions overview	GT16 Handy	GT14 Handy	GT11 Handy	Reference
Debug	Monitor screens 1		System monitor	○	○	○	×
			Ladder monitor	○	×	×	×
			Network monitor	○	×	×	×
			Intelligent module monitor	○	×	×	×
			Servo amplifier monitor	○	×	×	×
			Motion monitor	○	×	×	×
			Motion SFC monitor	○	×	×	×
			CNC monitor	×	×	×	×
			FX list editor	○	○	○	×
			A List editor	○	○	○	×
			SFC Monitor	○	×	×	×
			Ladder editor	○	×	×	×
			MELSEC-L troubleshooting	○	×	×	×
			Log viewer	○	×	×	×
	Monitor screens 2		Motion program(SV43) editor	×	×	×	×
	Debug setting	Q/L/QnA ladder monitor	Setting the data storage location for the MELSEC-Q/L/QnA ladder monitor function.	○	×	×	○
		Backup/restoration setting	Setting the storage locations for backups and backup settings	○	×	×	○
			Trigger backup setting		×		
			Setting the CPU No. setting at backup to "YES" or "NO"		×		
	Memory/data control		Backup/restoration	○	○	×	○
		GOT data package acquisition	Copying the OS, special data, and project data to a CF card or USB memory	○	○	×	×
			CNC data I/O	○	×	×	○
		Memory card format	Formatting a CF card or USB memory	○	○	○	×
		Memory information	Displaying the available memory of the GOT	○	○	○	×
		USB device status display	USB device status display	○	○	×	×
		SRAM control	Back up, restoring and initializing of the SRAM user area	○	○	×	×
			Motion program (SV43) I/O	○	×	×	×
Self check	Diagnostic functions		System alarm	○	○	○	×
			Memory check	○	○	○	×
			Drawing check	○	○	○	×
			Font check	○	○	○	×
			Touch panel check	○	○	○	×
			I/O check	○	○	○	×
			Network status display	○	×	×	×
			Ethernet status check	○	○	×	×
	Batch self check		Executing various diagnostics collectively and copying the result to a CF card or USB memory	○	×	×	×

○: Applicable ×: Not applicable - : Not required

Item			Functions overview	GT16 Handy	GT14 Handy	GT11 Handy	Reference
Data control	Data control	Alarm information	Deleting or copying alarm log files	○	○	○	×
			Converting alarm log files in G1A format → CSV/TXT format	○	○	×	×
			Displaying graphs of alarm log files	○	×	×	×
		Advanced Recipe information	Converting advanced recipe files in G1P format → CSV/TXT format Converting advanced recipe files in CSV/TXT format → G1P format Deleting/copying/moving advanced recipe files, creating a new advanced recipe file Deleting or moving advanced recipe folders, changing advanced recipe folder names, creating a new advanced recipe folder Writing/reading/matching record data and deleting device values with the advanced recipe record list	○	○	×	×
		Logging information	Converting logging files in G1L format → CSV/TXT format	○	○	×	×
			Deleting/copying/moving logging files, changing logging file names Deleting logging folders, creating a new logging folder	○	○	×	×
		Operation log information	Converting operation log files in G1O format → CSV/TXT format	○	×	×	○
			Deleting/copying/moving operation log files, changing operation log file names Deleting operation log folders, creating a new operation log folder	○	×	×	×
		Hard copy information	Deleting/copying hard copy files, changing hard copy file names	○	○	×	×
		Special data information	Deleting or checking special data files Deleting special data folders Downloading special data stored in the A drive (Standard CF card) or E drive (USB drive) to the C drive (Built-in flash memory)	○	×	×	×
		Operator information	Adding/editing/deleting/importing/exporting operator information, changing passwords, setting the automatic logout time and password expiration date	○	×	×	×
		Fingerprint information	Adding/deleting fingerprint information	×	×	×	×
	OS/project information	OS information	Installing or uploading OS, displaying OS property, checking OS data	○	○	○	×
		Project Information	Downloading/uploading/deleting/copying project files, displaying project file property, checking project file data	○	○	○	×

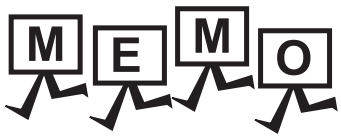
MEMO

Appendix.3 Transportation Precautions

When transporting lithium batteries, make sure to treat them based on the transport regulations.

Appendix.3.1 Relevant models

The battery for the GOT1000 Series is classified as shown in the table below.

Product name	Model	Description	Handled as
Battery for GOT1000 Series	GT11-BAT	Lithium battery	Non-dangerous goods

Appendix.3.2 Transportation guidelines

Products are packed properly in compliance with the transportation regulations prior to shipment. When repacking any of the unpacked products to transport it to another location, make sure to observe the IATA Dangerous Goods Regulations, IMDG Code and other local transportation regulations.
For details, please consult your transportation company.

REVISIONS

* The manual number is given on the bottom left of the back cover.

Print Date	* Manual Number	Sub Number	Revision
Oct. 2013	JY997D50201 JY997D50202	A	First edition
Jan. 2014	JY997D50201 JY997D50202	B	Compatible with GT Works3 Version1.108N • FX3U-232-ADP-MB compatible • RS-422/485 adapter (L6ADP-R4) compatible • FA transparent function (MX Component 4.03D) compatible • YOKOGAWA temperature controller (UT75A) compatible • FX3GE compatible • FREQROL-A800/F800 and E700EX compatible • MELSERVO-JE compatible • Azbil (former Yamatake) temperature controller (AHC2001) compatible
Apr. 2014	JY997D50201 JY997D50202	C	Compatible with GT Works3 Version1.112S • Q24DHCCPU-VG is supported. • The enlargement of the communication setting range of the TOSHIBA PLC is supported. • The ALLEN-BRADLEY PLC MicroLogix1400 is supported. • Indirect specification all station specification for the station No. of MODBUS/RTU are supported.
Jun. 2014	JY997D50201 JY997D50202	D	Compatible with GT Works3 Version1.117X • MELSEC iQ-R series are supported. • Communication driver (Serial (MELSEC)) is supported.
Jul. 2014	JY997D50201 JY997D50202	E	Compatible with GT Works3 Version1.118Y • MELSEC-WS (WS0-CPU3) is supported. • FUJI PLC MICREX-SX SPH compatible • SICK safety controller (FX3-CPU320002) compatible
Sep. 2014	JY997D50201 JY997D50202	F	With wall-mounting Attachment is added.
Jan. 2015	JY997D50201 JY997D50202	G	Compatible with GT Works3 Version1.126G • C Controller module (MELSEC iQ-R Series) is supported. • MELSEC iQ-F Series is supported. • FA Transparent Function MELSEC iQ-R Series MX Component, MX Sheet are supported. C Controller module (MELSEC iQ-R Series) CW Configurator is supported. • Servo amplifier connection MELSERVO-J4-*A-RJ compatible
Apr. 2015	JY997D50201 JY997D50202	H	Compatible with GT Works3 Version1.130L • FUJI PLC (MICREX-SX SPH) Serial Connection is supported.
Jul. 2015	JY997D50201 JY997D50202	J	Compatible with GT Works3 Version1.136S • MELSEC iQ-R Series RnENCPU connection is supported. • MELSEC iQ-R Series Device range extention (extended SRAM cassette is supported).
Oct. 2015	JY997D50201 JY997D50202	K	Compatible with GT Works3 Version1.144A • MELSEC iQ-R Series RnSFCPU connection is supported. • MODBUS(R)/TCP connection Port No. extension compatible
Dec. 2015	JY997D50201 JY997D50202	L	Compatible with GT Works3 Version1.150G • Q26DHCCPU-LS is supported. • FA Transparent Function • MX Component Ver 4.11M is supported. • The PC link module F3LC11-2F of PLCs manufactured by Yokogawa Electric Corporation is supported.
Apr. 2017	JY997D50201 JY997D50202	M	Some corrections
Jun. 2017	JY997D50201 JY997D50202	N	Some corrections
Dec. 2017	JY997D50201 JY997D50202	P	Some corrections

Print Date	* Manual Number	Sub Number	Revision
Apr. 2018	JY997D50201 JY997D50202	Q	Some corrections
Jun. 2020	JY997D50201 JY997D50202	R	Some corrections
Oct. 2020	JY997D50201 JY997D50202	S	Some corrections
Oct. 2022	JY997D50201 JY997D50202	T	Some corrections
Apr. 2023	JY997D50201 JY997D50202	U	Compatible with GT Works3 Version1.290C • The name of the communication driver for Ethernet connection to ALLEN-BRADLEY PLC has been changed.

This manual confers no industrial property rights or any rights of any other kind, nor does it confer any patent licenses.Mitsubishi Electric Corporation cannot be held responsible for any problems involving industrial property rights which may occur as a result of using the contents noted in this manual.

© 2013 MITSUBISHI ELECTRIC CORPORATION

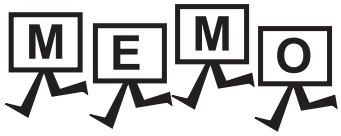
MEMO

WARRANTY

Please check the following product warranty details before using this product.

■1. Gratis Warranty Term and Gratis Warranty Range

If any faults or defects (hereinafter "Failure") found to be the responsibility of Mitsubishi occurs during use of the product within the gratis warranty term, the product shall be repaired at no cost via the sales representative or Mitsubishi Service Company.
However, if repairs are required onsite at domestic or overseas location, expenses to send an engineer will be solely at the customer's discretion.
Mitsubishi shall not be held responsible for any re-commissioning, maintenance, or testing on-site that involves replacement of the failed module.

(1) Gratis Warranty Term

The gratis warranty term of the product shall be for thirty-six (36) months after the date of purchase or delivery to a designated place.
Note that after manufacture and shipment from Mitsubishi, the maximum distribution period shall be six (6) months, and the longest gratis warranty term after manufacturing shall be forty-two (42) months.
The gratis warranty term of repair parts shall not exceed the gratis warranty term before repairs.

(2) Gratis Warranty Range

(a) The customer shall be responsible for the primary failure diagnosis unless otherwise specified.
If requested by the customer, Mitsubishi Electric Corporation or its representative firm may carry out the primary failure diagnosis at the customer's expense.
The primary failure diagnosis will, however, be free of charge should the cause of failure be attributable to Mitsubishi Electric Corporation.

(b) The range shall be limited to normal use within the usage state, usage methods, and usage environment, etc., which follow the conditions and precautions, etc., given in the instruction manual, user's manual and caution labels on the product.

(c) Even within the gratis warranty term, repairs shall be charged in the following cases.
- Failure occurring from inappropriate storage or handling, carelessness or negligence by the user. Failure caused by the user's hardware or software design.
- Failure caused by unapproved modifications, etc., to the product by the user.
- When the Mitsubishi product is assembled into a user's device, Failure that could have been avoided if functions or structures, judged as necessary in the legal safety measures the user's device is subject to or as necessary by industry standards, had been provided.
- Failure that could have been avoided if consumable parts designated in the instruction manual had been correctly serviced or replaced.
- Replacing consumable parts such as a battery, backlight, and fuse.
- Failure caused by external irresistible forces such as fires or abnormal voltages, and Failure caused by force majeure such as earthquakes, lightning, wind and water damage.
- Failure caused by reasons that could not be predicted by scientific technology standards at the time of shipment from Mitsubishi.
- Any other failure found not to be the responsibility of Mitsubishi or that admitted not to be so by the user.

■2. Onerous repair term after discontinuation of production

(1) Mitsubishi shall accept onerous product repairs for seven (7) years after production of the product is discontinued.
Discontinuation of production shall be notified with Mitsubishi Technical Bulletins, etc.

(2) Mitsubishi shall not accept a request for product supply (including spare parts) after production is discontinued.

■3. Overseas service

Overseas, repairs shall be accepted by Mitsubishi's local overseas FA Center.
Note that the repair conditions at each FA Center may differ.

■4. Exclusion of loss in opportunity and secondary loss from warranty liability

Regardless of the gratis warranty term, Mitsubishi shall not be liable for compensation to:

(1) Damages caused by any cause found not to be the responsibility of Mitsubishi.

(2) Loss in opportunity, lost profits incurred to the user by Failures of Mitsubishi products.

(3) Special damages and secondary damages whether foreseeable or not, compensation for accidents, and compensation for damages to products other than Mitsubishi products.

(4) Replacement by the user, maintenance of on-site equipment, start-up test run and other tasks.

■5. Changes in product specifications

The specifications given in the catalogs, manuals, or technical documents are subject to change without prior notice.

■6. Product application

(1) In using the Mitsubishi graphic operation terminal, the usage conditions shall be that the application will not lead to a major accident even if any problem or fault should occur in the graphic operation terminal device, and that backup and fail-safe functions are systematically provided outside of the device for any problem or fault.

(2) The Mitsubishi graphic operation terminal has been designed and manufactured for applications in general industries, etc.
Thus, applications in which the public could be affected such as in nuclear power plants and other power plants operated by respective power companies, and applications in which a special quality assurance system is required, such as for Railway companies or Public service shall be excluded from the graphic operation terminal applications.
In addition, applications in which human life or property could be greatly affected, such as in aircraft, medical, railway applications, incineration and fuel devices, manned transportation equipment, recreation and amusement devices, safety devices, shall also be excluded from the graphic operation terminal.
Even for the above applications, however, Mitsubishi Electric Corporation may consider the possibility of an application, provided that the customer notifies Mitsubishi Electric Corporation of the intention, the application is clearly defined and any special quality is not required, after the user consults the local Mitsubishi representative.

Intellectual Property Rights

■ Trademarks

GOT is a registered trademark of Mitsubishi Electric Corporation.
Microsoft, Windows, Windows NT, Windows Server, Windows Vista, and Windows 7 are registered trademarks or trademarks of Microsoft Corporation in the United States and other countries.
Adobe and Adobe Reader are registered trademarks of Adobe Systems Incorporated.
Pentium and Celeron are a registered trademarks of Intel Corporation in the United States and other countries.
MODBUS is a trademark of Schneider Electric SA.
VNC is a registered trademark of RealVNC Ltd. in the United States and other countries.
Other company and product names herein are either trademarks or registered trademarks of their respective owners.

■ Copyrights

The screens (screenshots) are used in accordance with the Microsoft Corporation guideline.

GRAPHIC OPERATION TERMINAL

GOT1000

GT14 Handy GOT User's Manual 1/2

■Hardware • Utility
■Connection(1/2) (MITSUBISHI FA DEVICE CONNECTIONS)

MODEL	GT14HS-U-E
MODEL CODE	_____
JY997D50201U	

MITSUBISHI ELECTRIC CORPORATION

HEAD OFFICE: TOKYO BLDG., 2-7-3, MARUNOUCHI, CHIYODA-KU, TOKYO 100-8310, JAPAN
NAGOYA WORKS: 1-14, YADA-MINAMI 5-CHOME, HIGASHI-KU, NAGOYA 461-8670, JAPAN

When exported from Japan, this manual does not require application to the Ministry of Economy, Trade and Industry for service transaction permission.

Specifications subject to change without notice.

MITSUBISHI ELECTRIC

GRAPHIC OPERATION TERMINAL GOT

GRAPHIC OPERATION TERMINAL

GOT1000

GT14 Handy GOT User's Manual

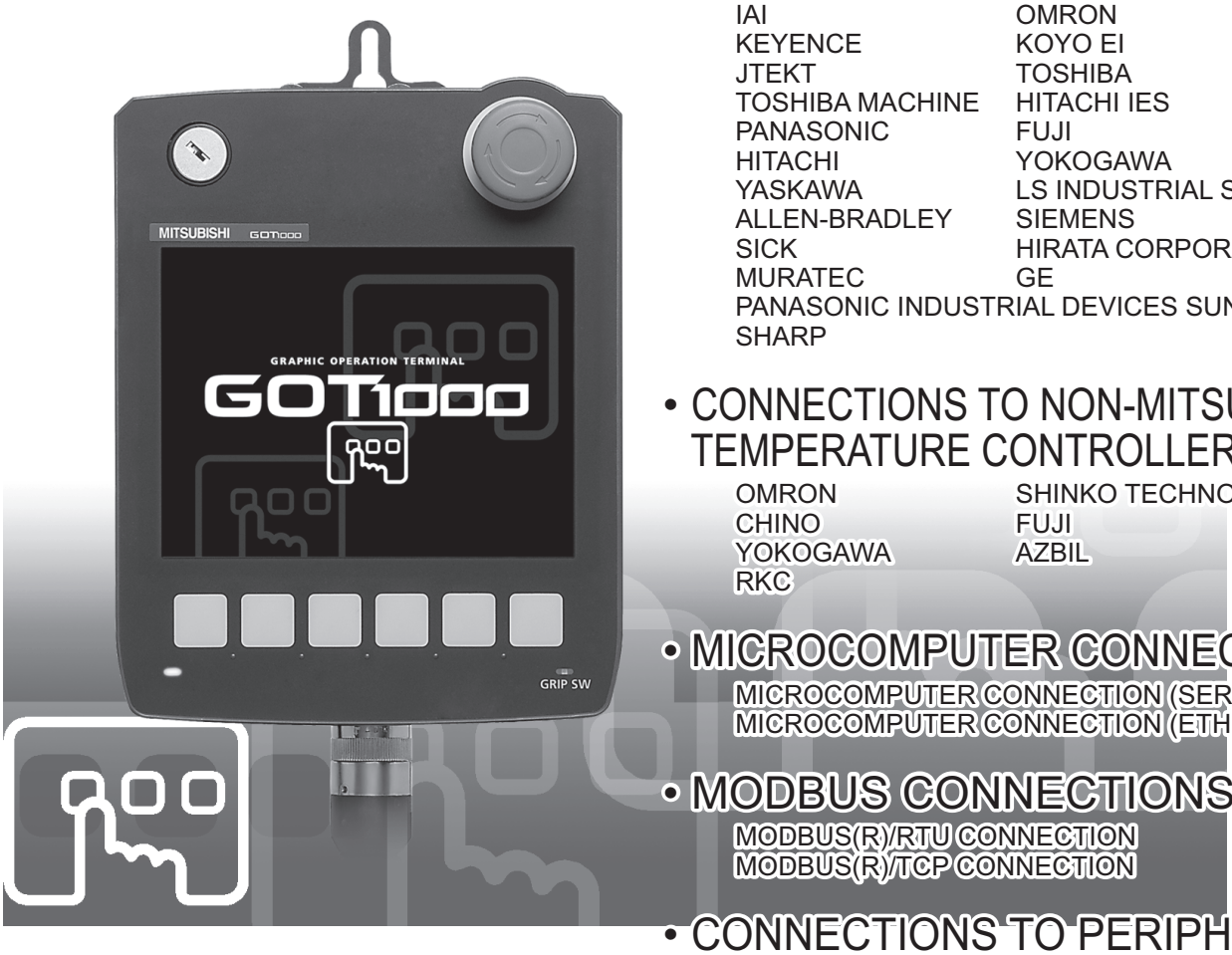

■Connection(2/2)

• CONNECTIONS TO NON-MITSUBISHI PLC

IAI
KEYENCE
JTEKT
TOSHIBA MACHINE
PANASONIC
HITACHI
YASKAWA
ALLEN-BRADLEY
SICK
MURATEC
OMRON
KOYO EI
TOSHIBA
HITACHI IES
FUJI
YOKOGAWA
LS INDUSTRIAL SYSTEMS
SIEMENS
HIRATA CORPORATION
GE
PANASONIC INDUSTRIAL DEVICES SUNX
SHARP

• CONNECTIONS TO NON-MITSUBISHI TEMPERATURE CONTROLLER

OMRON
CHINO
YOKOGAWA
RKC
SHINKO TECHNOS
FUJI
AZBIL

• MICROCOMPUTER CONNECTION

MICROCOMPUTER CONNECTION (SERIAL)
MICROCOMPUTER CONNECTION (ETHERNET)

• MODBUS CONNECTIONS

MODBUS(R)/RTU CONNECTION
MODBUS(R)/TCP CONNECTION

• CONNECTIONS TO PERIPHERAL EQUIPMENT

VNC(R) SERVER CONNECTION

● SAFETY PRECAUTIONS ●

(Always read these precautions before using this equipment.)

Before using this product, please read this manual and the relevant manuals introduced in this manual carefully and pay full attention to safety to handle the product correctly.
The precautions given in this manual are concerned with this product.
In this manual, the safety precautions are ranked as "WARNING" and "CAUTION".

⚠ **WARNING**	Indicates that incorrect handling may cause hazardous conditions, resulting in death or severe injury.
⚠ **CAUTION**	Indicates that incorrect handling may cause hazardous conditions, resulting in medium or slight personal injury or physical damage.

Note that the ⚠ caution level may lead to a serious accident according to the circumstances.
Always follow the instructions of both levels because they are important to personal safety.

Please save this manual to make it accessible when required and always forward it to the end user.

[DESIGN PRECAUTIONS]

⚠ WARNING

- Some failures of the GOT, communication unit or cable may keep the outputs on or off.
  Some failures of a touch panel may cause malfunction of the input objects such as a touch switch.
  An external monitoring circuit should be provided to check for output signals which may lead to a serious accident.
  Not doing so can cause an accident due to false output or malfunction.
- If a communication fault (including cable disconnection) occurs during monitoring on the GOT, communication between the GOT and PLC CPU is suspended and the GOT becomes inoperative.
  A system where the GOT is used should be configured to perform any significant operation to the system by using the switches of a device other than the GOT on the assumption that a GOT communication fault will occur.
  Not doing so can cause an accident due to false output or malfunction.
- Do not use the GOT as the warning device that may cause a serious accident.
  An independent and redundant hardware or mechanical interlock is required to configure the device that displays and outputs serious warning.
  Failure to observe this instruction may result in an accident due to incorrect output or malfunction.
- Incorrect operation of the touch switch(s) may lead to a serious accident if the GOT backlight is gone out.
  When the GOT backlight goes out, the POWER LED blinks (green/orange) and the display section dims, while the input of the touch switch(s) remains active.
  This may confuse an operator in thinking that the GOT is in "screensaver" mode, who then tries to release the GOT from this mode by touching the display section, which may cause a touch switch to operate.
  Note that the following occurs on the GOT when the backlight goes out.
  - The POWER LED flickers (green/orange) and the monitor screen appears blank.

[DESIGN PRECAUTIONS]

⚠ WARNING

- The display section is an analog-resistive type touch panel.
  If you touch the display section simultaneously in 2 points or more, the switch that is located around the center of the touched point, if any, may operate.
  Do not touch the display section in 2 points or more simultaneously.
  Doing so may cause an accident due to incorrect output or malfunction.
- When programs or parameters of the controller (such as a PLC) that is monitored by the GOT are changed, be sure to reset the GOT or shut off the power of the GOT at the same time.
  Not doing so can cause an accident due to false output or malfunction.
- To maintain the security (confidentiality, integrity, and availability) of the GOT and the system against unauthorized access, DoS[*1] attacks, computer viruses, and other cyberattacks from unreliable networks and devices via network, take appropriate measures such as firewalls, virtual private networks (VPNs), and antivirus solutions.
  Mitsubishi Electric shall have no responsibility or liability for any problems involving GOT trouble and system trouble by unauthorized access, DoS attacks, computer viruses, and other cyberattacks.
  *1 DoS: A denial-of-service (DoS) attack disrupts services by overloading systems or exploiting vulnerabilities, resulting in a denial-of-service (DoS) state.

[DESIGN PRECAUTIONS]

⚠ CAUTION

- Do not bundle the control and communication cables with main-circuit, power or other wiring.
  Run the above cables separately from such wiring and keep them a minimum of 100mm apart.
  Not doing so noise can cause a malfunction.
- Do not press the GOT display section with a pointed material as a pen or driver.
  Doing so can result in a damage or failure of the display section.
- When the GOT is connected to the Ethernet network, the available IP address is restricted according to the system configuration.
  - When multiple GOTs are connected to the Ethernet network:
    Do not set the IP address (192.168.0.18) for the GOTs and the controllers in the network.
  - When a single GOT is connected to the Ethernet network:
    Do not set the IP address (192.168.0.18) for the controllers except the GOT in the network.

  Doing so can cause the IP address duplication. The duplication can negatively affect the communication of the device with the IP address (192.168.0.18).
  The operation at the IP address duplication depends on the devices and the system.
- Turn on the controllers and the network devices to be ready for communication before they communicate with GOT.
  Failure to do so can cause a communication error on the GOT.

[MOUNTING PRECAUTIONS]

⚠ WARNING

- Be sure to shut off all phases of the external power supply used by the system before mounting or removing the GOT to/from the panel.
  Not switching the power off in all phases can cause a unit failure or malfunction.
- Always turn off the power ON/OFF switch on the connector conversion box before connecting or disconnecting the GOT to it.
  Connecting or disconnecting the GOT with the power being turned on may result in damage to the unit or malfunctions.

[MOUNTING PRECAUTIONS]

⚠ CAUTION

- Use the GOT in the environment that satisfies the general specifications described in the User's Manual.
  Not doing so can cause an electric shock, fire, malfunction or product damage or deterioration.
- Never drop cutting chips and electric wire chips into the ventilation window of the GOT when you drill screw holes or perform wiring.
  Otherwise, fire, failure or malfunction may be caused.
- Connect connection cables securely to the specified connectors while the power is turned OFF.
  Imperfect connection may cause malfunction or failure.
- When inserting/removing a SD card into/from the GOT, turn the SD card access switch off in advance.
  Failure to do so may corrupt data within the SD card.
- When removing a SD card from the GOT, make sure to support the SD card by hand, as it may pop out.
  Failure to do so may cause the SD card to drop from the GOT and break.
- When installing a USB memory to the GOT, make sure to install the USB memory to the USB interface firmly.
  Failure to do so may cause a malfunction due to poor contact.
- Before removing the USB memory from the GOT, operate the utility screen for removal.
  After the successful completion dialog box is displayed, remove the memory by hand carefully.
  Failure to do so may cause the USB memory to drop, resulting in a damage or failure of the memory.
- Operate and store the GOT in environments without direct sunlight, high temperature, dust, humidity, and vibrations.

[WIRING PRECAUTIONS]

⚠ WARNING

- Be sure to shut off all phases of the external power supply used by the system before wiring. Failure to do so may result in an electric shock, product damage or malfunctions.
- Please make sure to ground FG terminal of the GOT power supply section by applying 100 or less which is used exclusively for the GOT. Not doing so may cause an electric shock or malfunction.
- Correctly wire the GOT power supply section after confirming the rated voltage and terminal arrangement of the product. Not doing so can cause a fire or failure.
- Exercise care to avoid foreign matter such as chips and wire offcuts entering the GOT. Not doing so can cause a fire, failure or malfunction.

[WIRING PRECAUTIONS]

⚠ CAUTION

- The cables connected to the unit must be run in ducts or clamped.
  Not doing so can cause the unit or cable to be damaged due to the dangling, motion or accidental pulling of the cables or can cause a malfunction due to a cable connection fault.
- When unplugging the cable connected to the unit, do not hold and pull the cable portion.
  Doing so can cause the unit or cable to be damaged or can cause a malfunction due to a cable connection fault.
- Plug the communication cable into the connector of the connected unit and tighten the mounting and terminal screws in the specified torque range.
  Undertightening can cause a short circuit or malfunction. Overtightening can cause a short circuit or malfunction due to the damage of the screws or unit.

[TEST OPERATION PRECAUTIONS]

⚠ WARNING

- Before performing the test operations of the user creation monitor screen (such as turning ON or OFF bit device, changing the word device current value, changing the settings or current values of the timer or counter, and changing the buffer memory current value), read through the manual carefully and make yourself familiar with the operation method.
  During test operation, never change the data of the devices which are used to perform significant operation for the system.
  False output or malfunction can cause an accident.

[STARTUP/MAINTENANCE PRECAUTIONS]

⚠ WARNING

- When power is on, do not touch the terminals.
  Doing so can cause an electric shock or malfunction.
- Correctly connect the battery connector.
  Do not charge, disassemble, heat, short-circuit, solder, or throw the battery into the fire.
  Doing so will cause the battery to produce heat, explode, or ignite, resulting in injury and fire.
- Before starting cleaning or terminal screw retightening, always switch off the power externally in all phases.
  Not switching the power off in all phases can cause a unit failure or malfunction.
  Undertightening can cause a short circuit or malfunction.
  Overtightening can cause a short circuit or malfunction due to the damage of the screws or unit.

[STARTUP/MAINTENANCE PRECAUTIONS]

⚠ CAUTION

- Do not disassemble or modify the unit.
  Doing so can cause a failure, malfunction, injury or fire.
- Do not touch the conductive and electronic parts of the unit directly.
  Doing so can cause a unit malfunction or failure.
- Do not drop or apply strong impact to the unit.
  Doing so may damage the unit.
- Do not drop or give an impact to the battery mounted to the unit.
  Doing so may damage the battery, causing the battery fluid to leak inside the battery.
  If the battery is dropped or given an impact, dispose of it without using.
- For repair of the backlight, contact your local Mitsubishi (Electric System) Service.
- Before touching the unit, always touch grounded metal, etc. to discharge static electricity from human body, etc.
  Not doing so can cause the unit to fail or malfunction.
- Replace battery with GT11-50BAT by Mitsubishi electric Co. only.
  Use of another battery may present a risk of fire or explosion.
- Dispose of used battery promptly.
  Keep away from children. Do not disassemble and do not dispose of in fire.

[DISPOSAL PRECAUTIONS]

⚠ CAUTION

- When disposing of the product, handle it as industrial waste.
- When disposing of this product, treat it as industrial waste. When disposing of batteries, separate them from other wastes according to the local regulations.
  (For details of the battery directive in EU member states, refer to the User's Manual of the GOT to be used.)

[TOUCH PANEL PRECAUTIONS]

⚠ CAUTION

- For the analog-resistive film type touch panels, normally the adjustment is not required. However, the difference between a touched position and the object position may occur as the period of use elapses. When any difference between a touched position and the object position occurs, execute the touch panel calibration.
- When any difference between a touched position and the object position occurs, other object may be activated. This may cause an unexpected operation due to incorrect output or malfunction.

[TRANSPORTATION PRECAUTIONS]

⚠ CAUTION

- When transporting lithium batteries, make sure to treat them based on the transport regulations.
  (For details on models subject to restrictions, refer to the User's Manual for the GOT you are using.)
- Before transporting the GOT, turn the GOT power on and check that the battery voltage status is normal on the Time setting & display screen (utilities screen). In addition, confirm that the adequate battery life remains on the rating plate.
  Transporting the GOT with the low battery voltage or the battery the reached battery life may unstabilize the backup data unstable during transportation.
- Make sure to transport the GOT main unit and/or relevant unit(s) in the manner they will not be exposed to the impact exceeding the impact resistance described in the general specifications of the User's Manual, as they are precision devices.
  Failure to do so may cause the unit to fail.
  Check if the unit operates correctly after transportation.

INTRODUCTION

Thank you for choosing Mitsubishi Electric Graphic Operation Terminal (Mitsubishi GOT).
Read this manual and make sure you understand the functions and performance of the GOT thoroughly in advance to ensure correct use.

CONTENTS

GT14 Handy GOT User's Manual 1/2

SAFETY PRECAUTIONS ..... A - 1
INTRODUCTION ..... A - 7
CONTENTS ..... A - 7
MANUALS ..... A - 33
QUICK REFERENCE ..... A - 33
ABBREVIATIONS AND GENERIC TERMS ..... A - 34
HOW TO READ THIS MANUAL ..... A - 39

1. OVERVIEW

1.1 Features ..... 1 - 2
1.1.1 Rough procedure ..... 1 - 3

2. SYSTEM CONFIGURATION

2.1 Overall Configuration ..... 2 - 1
2.2 System Equipment ..... 2 - 2
2.2.1 GOT ..... 2 - 3
2.2.2 OPTION ..... 2 - 3

3. SPECIFICATIONS

3.1 General Specifications ..... 3 - 1
3.2 Performance Specifications ..... 3 - 2
3.3 Power Supply Specifications ..... 3 - 4
3.4 Battery specifications ..... 3 - 5
3.4.1 Applicable battery ..... 3 - 5
3.4.2 Battery specifications ..... 3 - 5

4. PARTS NAME

4.1 Front Panel ..... 4 - 1
4.1.1 Name and specifications ..... 4 - 1
4.2 Back Panel ..... 4 - 2
4.2.1 Name and specifications ..... 4 - 2
4.2.2 Opening and closing of environmental protection back cover ..... 4 - 3
4.3 Top Face (Interface) ..... 4 - 4
4.3.1 Names and specifications ..... 4 - 4

5. UL, cUL STANDARDS AND EMC DIRECTIVE

5.1 UL, cUL Standards ..... 5 - 1
5.2 EMC Directive ..... 5 - 2
5.2.1 Requirements to Meet EMC Directive ..... 5 - 2
5.2.2 EMC Directive-Compliant System Configuration ..... 5 - 4
5.2.3 Precautions for Wiring/Connecting the EMC Directive-Compliant Product ..... 5 - 6

6. OPTION

6.1 SD Card ..... 6 - 1
6.1.1 Applicable SD card ..... 6 - 1
6.1.2 Installing and removing procedures of the SD card ..... 6 - 1
6.2 USB Memory ..... 6 - 4
6.2.1 Applicable USB memory ..... 6 - 4
6.2.2 Installing and removing procedures of the USB memory ..... 6 - 4
6.3 Battery ..... 6 - 5
6.3.1 Applicable battery ..... 6 - 5
6.3.2 Battery replacement procedure ..... 6 - 5
6.4 Protective Sheet ..... 6 - 7
6.4.1 Applicable protective sheet ..... 6 - 7
6.4.2 Installing procedure ..... 6 - 7
6.5 Emergency Stop Switch Guard Cover ..... 6 - 8
6.5.1 Applicable emergency stop SW guard cover ..... 6 - 8
6.5.2 Installing procedure ..... 6 - 8
6.6 Connector Conversion Box ..... 6 - 9
6.6.1 Applicable Connector Conversion Box ..... 6 - 9
6.6.2 Connector Conversion Box (GT16H-CNB-42S) ..... 6 - 9
6.6.3 Connector Conversion Box (GT11H-CNB-37S) ..... 6 - 24
6.6.4 Connector conversion box (GT16H-CNB-37S) ..... 6 - 29
6.7 With wall-mounting Attachment ..... 6 - 34
6.7.1 Applicable With wall-mounting Attachment ..... 6 - 34
6.7.2 Mounting ..... 6 - 34
6.7.3 Attachment of GT14 handy GOT ..... 6 - 35

7. INSTALLATION

7.1 Installing Procedure ..... 7 - 1
7.1.1 Holding the Handy GOT in hand ..... 7 - 1
7.1.2 Hanging on a wall ..... 7 - 2
7.1.3 Placing on a desk or a floor ..... 7 - 2
7.1.4 Installing to/removing from panel ..... 7 - 3

8. COMMUNICATION CABLE

8.1 Overview of Communication Cable ..... 8 - 1
8.2 External Cable, Relay Cable ..... 8 - 4
8.2.1 Pin layout and signal names of the external cable ..... 8 - 4
8.2.2 Pin layout of the relay cable ..... 8 - 6
8.2.3 Connector specifications ..... 8 - 9
8.2.4 Installing and removing of external cable ..... 8 - 9

9. HANDLING OF POWER WIRING AND SWITCH

9.1 Internal Wiring Diagram of GT14 Handy ..... 9 - 3
9.2 Power Wiring ..... 9 - 4
9.2.1 Power wiring and grounding ..... 9 - 4
9.2.2 The cause of malfunctions related wiring/Remedy ..... 9 - 5
9.3 Wiring inside and outside the panel ..... 9 - 8
9.3.1 Wiring inside ..... 9 - 8
9.3.2 Outside the panel ..... 9 - 8
9.3.3 Attaching surge killers to control equipment ..... 9 - 9
9.4 Switch Wiring ..... 9 - 10
9.4.1 Overview for switch ..... 9 - 10
9.4.2 Switch wiring example ..... 9 - 11
9.4.3 Operation switch wiring ..... 9 - 15
9.4.4 Operation switch input ..... 9 - 15
9.4.5 Emergency stop switch wiring ..... 9 - 16
9.4.6 Grip switch ..... 9 - 19
9.4.7 Grip switch wiring ..... 9 - 19
9.4.8 LED settings of grip switch ..... 9 - 21
9.4.9 Keylock switch (2-position SW) ..... 9 - 21

10. UTILITY FUNCTION

10.1 Utility Execution ..... 10 - 1
10.2 Utility Function List ..... 10 - 2
10.3 Utility Display ..... 10 - 4
10.3.1 Display operation of main menu ..... 10 - 6
10.3.2 Utility basic configuration ..... 10 - 8
10.3.3 Basic operation of settings change ..... 10 - 9

11. COMMUNICATION INTERFACE SETTING (COMMUNICATION SETTING)

11.1 Communication setting ..... 11 - 1
11.1.1 Communication setting functions ..... 11 - 1
11.1.2 Display operation of Communication Setting ..... 11 - 1
11.1.3 Communication setting contents ..... 11 - 2
11.1.4 Communication setting operation ..... 11 - 4
11.2 Communication Detail Setting ..... 11 - 7
11.2.1 Communication detail setting functions ..... 11 - 7
11.2.2 Display operation of Communication Detail setting ..... 11 - 7
11.2.3 Display contents of Communication Detail setting ..... 11 - 9
11.3 Ethernet Setting ..... 11 - 13
11.3.1 Ethernet setting functions ..... 11 - 13
11.3.2 Display operation of Ethernet setting ..... 11 - 13
11.3.3 Display contents of Ethernet setting ..... 11 - 14

12. DISPLAY AND OPERATION SETTINGS (GOT SET UP)

12.1 Display Setting ..... 12 - 1
12.1.1 Function of Display ..... 12 - 1
12.1.2 Display operation of Display ..... 12 - 3
12.1.3 Display operations ..... 12 - 4

12.2 Operation Setting (Settings Regarding Operation) ..... 12 - 7
12.2.1 Operation setting functions ..... 12 - 7
12.2.2 Display operation of Operation ..... 12 - 8
12.2.3 Setting operation of operation ..... 12 - 9
12.2.4 Security level change ..... 12 - 10
12.2.5 Utility Call Key Setting ..... 12 - 12
12.2.6 Adjusting the touch panel position (Touch panel calibration) ..... 12 - 14
12.2.7 USB mouse/keyboard setting ..... 12 - 16
12.2.8 VNC(R) server function setting ..... 12 - 18
12.3 Transparent Mode Setting ..... 12 - 19
12.4 Backup/Restoration Setting ..... 12 - 20
12.5 Behavior of Duplicate IPs ..... 12 - 23
12.6 License Management ..... 12 - 26

13. CLOCK SETTINGS AND BATTERY STATUS DISPLAY (TIME SETTING AND DISPLAY)

13.1 Time Setting and Display ..... 13 - 1
13.1.1 Time setting and display functions ..... 13 - 1

14. FILE DISPLAY AND COPY (PROGRAM/DATA CONTROL)

14.1 Data Storage Location ..... 14 - 1
14.1.1 Data type and storage location ..... 14 - 1
14.1.2 OS version confirmation ..... 14 - 3
14.1.3 Capacity confirmation of the project data downloading location ..... 14 - 4
14.1.4 Display file ..... 14 - 4
14.2 Various Data Control ..... 14 - 5
14.2.1 OS information ..... 14 - 5
14.2.2 Alarm information ..... 14 - 11
14.2.3 Project Information ..... 14 - 17
14.2.4 Hard copy information ..... 14 - 27
14.2.5 Advanced recipe information ..... 14 - 33
14.2.6 Logging information ..... 14 - 53
14.2.7 Memory card format ..... 14 - 63
14.2.8 Memory information ..... 14 - 65
14.2.9 USB device status display ..... 14 - 66
14.2.10 SRAM control ..... 14 - 68
14.2.11 GOT data package acquisition ..... 14 - 73
14.2.12 Operator information management ..... 14 - 74

15. GOT SELF CHECK (DEBUG AND SELF CHECK)

15.1 Debug ..... 15 - 1
15.1.1 System monitor ..... 15 - 1
15.1.2 A list editor ..... 15 - 1
15.1.3 FX list editor ..... 15 - 1
15.1.4 Backup/restoration ..... 15 - 2
15.2 Self Check ..... 15 - 3
15.2.1 Memory check ..... 15 - 3
15.2.2 Drawing check ..... 15 - 6
15.2.3 Font check ..... 15 - 10

15.2.4 Touch panel check ..... 15 - 12
15.2.5 I/O check ..... 15 - 14
15.2.6 Ethernet status check ..... 15 - 18
15.3 System Alarm Display ..... 15 - 20
15.4 GOT start time ..... 15 - 22

16. CLEANING DISPLAY SECTION (CLEAN)

17. INSTALLATION OF COREOS, BOOTOS AND STANDARD MONITOR OS

17.1 BootOS and Standard Monitor OS Required for Installation ..... 17 - 2
17.2 Prior Preparations for Installing BootOS and Standard Monitor OS ..... 17 - 3
17.3 BootOS and Standard Monitor OS Installation Using SD card or USB Memory ..... 17 - 4
17.3.1 Installing when starting the GOT ..... 17 - 5
17.3.2 Installing using the program/data control function (Utility) ..... 17 - 7
17.4 When Installing the Different Version of BootOS, Standard Monitor OS ..... 17 - 9
17.5 CoreOS ..... 17 - 11
17.5.1 Installing the CoreOS ..... 17 - 11
17.5.2 When the CoreOS cannot be installed ..... 17 - 13

18. DRAWING SOFTWARE SETTINGS (CONTROLLER SETTING AND COMMON SETTINGS)

18.1 Setting the Communication Interface ..... 18 - 1
18.1.1 Setting connected equipment (Channel setting) ..... 18 - 2
18.1.2 I/F communication setting ..... 18 - 12
18.1.3 Precautions ..... 18 - 14
18.2 Common Settings Dedicated to Handy GOT ..... 18 - 14
18.3 Writing the Communication Settings and Common Settings onto the GOT ..... 18 - 15
18.3.1 Writing the project data and OS onto the GOT ..... 18 - 15
18.3.2 Checking the project data and OS writing on GOT ..... 18 - 16

19. MAINTENANCE AND INSPECTION

19.1 Daily Inspection ..... 19 - 2
19.2 Periodic Inspection ..... 19 - 2
19.3 Cleaning Method ..... 19 - 3
19.4 Battery Voltage Low Detection and Battery Replacement ..... 19 - 4
19.5 Backlight Shutoff Detection ..... 19 - 7
19.5.1 Backlight shutoff detection and external alarm ..... 19 - 7

20. TROUBLESHOOTING

20.1 GOT Restoration Sheet ..... 20 - 1
20.2 Error Message and System Alarm ..... 20 - 11
20.2.1 Error contents display ..... 20 - 11
20.2.2 List of error message/system alarm ..... 20 - 14

MITSUBISHI PLC CONNECTIONS

21. DIRECT CONNECTION TO CPU

21.1 Connectable Model List ..... 21 - 1

21.2 System Configuration ..... 21 - 4
21.2.1 Connecting to QCPU ..... 21 - 4
21.2.2 Connecting to LCPU ..... 21 - 5
21.2.3 Connecting to QnACPU ..... 21 - 7
21.2.4 Connecting to ACPU ..... 21 - 8
21.2.5 Connecting to MELSEC iQ-F Series ..... 21 - 9
21.2.6 Connecting to FXCPU ..... 21 - 15
21.2.7 Connecting to WSCPU ..... 21 - 25
21.2.8 Connecting to the motion controller CPU (Q170MCPU) ..... 21 - 26
21.3 Connection Diagram ..... 21 - 27
21.3.1 RS-232 cable ..... 21 - 27
21.3.2 RS-422 cable ..... 21 - 28
21.4 GOT Side Settings ..... 21 - 30
21.4.1 Setting communication interface (Communication settings) ..... 21 - 30
21.4.2 Communication detail settings ..... 21 - 30
21.5 PLC Side Setting ..... 21 - 32
21.5.1 L6ADP-R4 adapter settings ..... 21 - 32
21.5.2 L6ADP-R4 adapter settings ..... 21 - 32
21.6 Precautions ..... 21 - 33

22. COMPUTER LINK CONNECTION

22.1 Connectable Model List ..... 22 - 1
22.1.1 PLC/Motion controller CPU ..... 22 - 1
22.1.2 Serial communication module/Computer link module ..... 22 - 4
22.2 System Configuration ..... 22 - 5
22.2.1 Connecting to MELSEC iQ-R series ..... 22 - 5
22.2.2 Connecting to QCPU (Q mode) ..... 22 - 6
22.2.3 Connecting to LCPU ..... 22 - 8
22.2.4 Connecting to QCPU (A mode) ..... 22 - 10
22.2.5 Connecting to QnACPU (QnACPU type) ..... 22 - 12
22.2.6 Connecting to QnACPU (QnASCPU type) ..... 22 - 15
22.2.7 Connecting to ACPU (AnCPU type) ..... 22 - 18
22.2.8 Connecting to ACPU (AnSCPU type, A0J2HCPU, A2CCPUC) ..... 22 - 19
22.3 Connection Diagram ..... 22 - 21
22.3.1 RS-232 cable ..... 22 - 21
22.3.2 RS-422 cable ..... 22 - 22
22.4 GOT Side Settings ..... 22 - 24
22.4.1 Setting communication interface (Communication settings) ..... 22 - 24
22.4.2 Communication detail settings ..... 22 - 24
22.5 PLC Side Setting ..... 22 - 26
22.5.1 Connecting serial communication module (MELSEC iQ-R Series) ..... 22 - 26
22.5.2 Connecting serial communication module (Q, L Series) ..... 22 - 27
22.5.3 Connecting serial communication module (QnA Series) ..... 22 - 28
22.5.4 Connecting computer link module ..... 22 - 30
22.6 Precautions ..... 22 - 33

23. ETHERNET CONNECTION

23.1 Connectable Model List ..... 23 - 1
23.1.1 PLC/Motion controller CPU ..... 23 - 1

23.1.2 Ethernet module ..... 23 - 4
23.2 System Configuration ..... 23 - 5
23.2.1 Connecting to Ethernet module ..... 23 - 5
23.2.2 Connection to Built-in Ethernet port CPU or C controller module ..... 23 - 9
23.2.3 Connecting to Display I/F ..... 23 - 11
23.2.4 Connecting to CC-Link IE Field Network Ethernet adapter module ..... 23 - 12
23.2.5 Connecting to PERIPHERAL I/F ..... 23 - 13
23.3 GOT Side Settings ..... 23 - 14
23.3.1 Setting communication interface (Communication settings) ..... 23 - 14
23.3.2 Communication detail settings ..... 23 - 14
23.3.3 Ethernet setting ..... 23 - 15
23.3.4 Routing parameter setting ..... 23 - 16
23.4 PLC Side Setting ..... 23 - 17
23.4.1 Connecting to Built-in Ethernet port CPU (one-to one connection) ..... 23 - 18
23.4.2 Connecting to Built-in Ethernet port CPU (multiple connection) ..... 23 - 19
23.4.3 Connecting to Ethernet module (MELSEC iQ-R Series) ..... 23 - 21
23.4.4 Connection to C Controller module (MELSEC iQ-R Series) ..... 23 - 24
23.4.5 Connecting to Built-in Ethernet port CPU (one-to-one connection) ..... 23 - 26
23.4.6 Connecting to Built-in Ethernet port CPU (multiple connection) ..... 23 - 28
23.4.7 Connecting to Ethernet module (Q/L Series) ..... 23 - 30
23.4.8 Connecting to C controller module (Q Series) ..... 23 - 33
23.4.9 Connecting to Ethernet module (QnA Series) ..... 23 - 36
23.4.10 Connecting to Ethernet module (A Series) ..... 23 - 39
23.4.11 Connecting to Ethernet module (FX Series) ..... 23 - 43
23.4.12 Connecting to Built-in Ethernet port FXCPU (FX3GE) ..... 23 - 47
23.4.13 Connecting to Display I/F (CNC C70) ..... 23 - 49
23.4.14 Connecting to CC-Link IE Field Network Ethernet adapter module ..... 23 - 51
23.4.15 Connecting to PERIPHERAL I/F (Built-in Ethernet port Motion Controller CPU) ..... 23 - 53
23.5 Precautions ..... 23 - 56

24. CC-Link CONNECTION (Via G4)

24.1 Connectable Model List ..... 24 - 1
24.1.1 PLC/Motion controller CPU ..... 24 - 1
24.1.2 CC-Link module/peripheral module ..... 24 - 3
24.2 System Configuration ..... 24 - 4
24.2.1 Connecting to QCPU (Q mode) ..... 24 - 4
24.2.2 Connecting to LCPU ..... 24 - 6
24.3 Connection Diagram ..... 24 - 8
24.3.1 RS-232 cable ..... 24 - 8
24.4 GOT Side Settings ..... 24 - 9
24.4.1 Setting communication interface (Communication settings) ..... 24 - 9
24.4.2 Communication detail settings ..... 24 - 9
24.5 PLC Side Setting ..... 24 - 10
24.5.1 Connecting AJ65BT-G4-S3 ..... 24 - 10
24.5.2 Connecting AJ65BT-R2N ..... 24 - 11
24.5.3 Switch setting of CC-Link module (Q Series) ..... 24 - 13
24.5.4 [Network parameter] of GX Developer ..... 24 - 13
24.5.5 Parameter setting (when connecting to C controller module (Q Series)) ..... 24 - 14
24.5.6 [Controller Setting] of GT Designer3 ..... 24 - 15

24.6 Precautions ..... 24 - 16

MITSUBISHI FA DEVICE CONNECTIONS

25. INVERTER CONNECTION

25.1 Connectable Model List ..... 25 - 1
25.2 System Configuration ..... 25 - 2
25.2.1 Connecting to FREQROL-A500/A500L/F500/F500L/V500/V500L ..... 25 - 2
25.2.2 Connecting to FREQROL-E500/S500/S500E/F500J/D700/F700PJ ..... 25 - 7
25.2.3 Connecting to FREQROL E700/sensorless servo (FREQROL-E700EX) ..... 25 - 10
25.2.4 Connecting to FREQROL-A700/F700/F700P ..... 25 - 14
25.2.5 Connecting to FREQROL-A800/F800 ..... 25 - 20
25.2.6 Connecting to MD-CX522-□□K(-A0) ..... 25 - 24
25.3 Connection Diagram ..... 25 - 27
25.3.1 RS-422 cable ..... 25 - 27
25.4 GOT Side Settings ..... 25 - 34
25.4.1 Setting communication interface (Communication settings) ..... 25 - 34
25.4.2 Communication detail settings ..... 25 - 34
25.5 FREQROL Series Inverter Side Settings ..... 25 - 35
25.5.1 Connecting to FREQROL-S500, S500E, or F500J series ..... 25 - 35
25.5.2 Connecting to FREQROL-E500 series ..... 25 - 35
25.5.3 Connecting to FREQROL-F500, F500L series ..... 25 - 36
25.5.4 Connecting to FREQROL-A500 or A500L series ..... 25 - 36
25.5.5 Connecting to FREQROL-V500 or V500L series ..... 25 - 37
25.5.6 Connecting to FREQROL-E700 or sensorless servo (FREQROL-E700EX) series ..... 25 - 37
25.5.7 Connecting to FREQROL-D700/F700PJ series ..... 25 - 38
25.5.8 Connecting to FREQROL-F700/F700P ..... 25 - 39
25.5.9 Connecting to FREQROL-A700 series ..... 25 - 40
25.5.10 Connecting FREQROL-A800/F800 series ..... 25 - 41
25.5.11 Connecting sensorless servo (FREQROL-E700EX series) ..... 25 - 42
25.5.12 Connecting to MD-CX522-□□K(-A0) ..... 25 - 43
25.5.13 Station number setting ..... 25 - 43
25.6 Device Range that Can Be Set ..... 25 - 44
25.7 Precautions ..... 25 - 44

26. SERVO AMPLIFIER CONNECTION

26.1 Connectable Model List ..... 26 - 1
26.2 System Configuration ..... 26 - 2
26.2.1 Connecting to the MELSERVO-J2-Super or MELSERVO-J2M Series ..... 26 - 2
26.2.2 Connecting to MELSERVO-J4 or J3 series ..... 26 - 5
26.2.3 Connecting to the MELSERVO-JE Super Series ..... 26 - 9
26.3 Connection Diagram ..... 26 - 11
26.3.1 RS-232 cable ..... 26 - 11
26.3.2 RS-422 cable ..... 26 - 12
26.4 GOT Side Settings ..... 26 - 17
26.4.1 Setting communication interface (Communication settings) ..... 26 - 17
26.4.2 Communication detail settings ..... 26 - 17
26.5 Setting on Servo Amplifier Side ..... 26 - 18
26.5.1 Connecting to the MELSERVO-J2-Super series ..... 26 - 18

26.5.2 Connecting to the MELSERVO-J2M series ..... 26 - 19
26.5.3 Connecting to the MELSERVO-J4, J3, or JE Series ..... 26 - 20
26.5.4 Station number setting ..... 26 - 20
26.6 Device Range that Can Be Set ..... 26 - 21
26.7 Precautions ..... 26 - 21

27. ROBOT CONTROLLER CONNECTION

27.1 Connectable Model List ..... 27 - 1
27.2 System Configuration ..... 27 - 1
27.2.1 Connecting to robot controller (CRnD-700) ..... 27 - 1
27.3 GOT Side Settings ..... 27 - 2
27.3.1 Setting communication interface (Communication settings) ..... 27 - 2
27.3.2 Communication detail settings ..... 27 - 2
27.3.3 Ethernet setting ..... 27 - 3
27.4 PLC Side Setting ..... 27 - 4
27.4.1 Connecting to robot controller (CRnD-700) ..... 27 - 4
27.5 Device Range that Can Be Set ..... 27 - 5
27.6 Precautions ..... 27 - 5

28. CNC CONNECTION

28.1 Connectable Model List ..... 28 - 1
28.2 System Configuration ..... 28 - 1
28.2.1 Direct connection to CPU ..... 28 - 1
28.2.2 Ethernet connection ..... 28 - 3
28.3 Connection Diagram ..... 28 - 4
28.3.1 RS-232 cable ..... 28 - 4
28.4 GOT Side Settings ..... 28 - 5
28.4.1 Setting communication interface (Communication settings) ..... 28 - 5
28.4.2 Communication detail settings ..... 28 - 5
28.4.3 Ethernet setting ..... 28 - 6
28.5 CNC Side Settings ..... 28 - 7
28.5.1 Ethernet Connection ..... 28 - 7

MULTIPLE GOT CONNECTION FUNCTION

29. MULTIPLE GOT CONNECTION FUNCTION

29.1 Connectable Model List ..... 29 - 1
29.2 System Configuration ..... 29 - 1
29.2.1 Connecting the GOT to PLC via RS-232 interface ..... 29 - 1
29.2.2 Connecting the GOT to PLC via RS-422 interface ..... 29 - 3
29.3 Connection Diagram ..... 29 - 5
29.3.1 RS-232 cable ..... 29 - 5
29.3.2 RS-422 cable ..... 29 - 6
29.4 GOT Side Settings ..... 29 - 7
29.4.1 Setting communication interface (Communication settings) ..... 29 - 7
29.4.2 Communication detail settings ..... 29 - 8
29.5 Precautions ..... 29 - 10

MULTI-CHANNEL FUNCTION

30. MULTI-CHANNEL FUNCTION

30.1 What is Multi-channel Function? ..... 30 - 1
30.2 System Configuration ..... 30 - 2
30.3 GOT Side Settings ..... 30 - 3
30.3.1 General flow from system selection to drawing ..... 30 - 3
30.3.2 Determining the connection type and channel No. (System selection) ..... 30 - 4
30.3.3 Determining the GOT side interface (Interface selection) ..... 30 - 5
30.3.4 Setting for communication settings ..... 30 - 8
30.3.5 Items to be checked before starting drawing ..... 30 - 9
30.4 Precautions ..... 30 - 11
30.4.1 Precautions for use ..... 30 - 11
30.5 Multi-channel function check sheet ..... 30 - 12

FA TRANSPARENT FUNCTION

31. FA TRANSPARENT FUNCTION

31.1 FA Transparent Function ..... 31 - 1
31.2 Compatible Software ..... 31 - 1
31.3 List of Models that Can Be Monitored ..... 31 - 5
31.4 System Configuration ..... 31 - 11
31.4.1 GX Works3, CW Configurator, GX Works2, GX Developer, GX LogViewer, MX Component, MX Sheet, CPU Module Logging Configuration Tool, Setting/Monitoring tool for C Controller module ..... 31 - 11
31.4.2 PX Developer, GX Configurator ..... 31 - 12
31.4.3 MT Developer, MT Works2 ..... 31 - 13
31.4.4 MR Configurator, MR Configurator2 ..... 31 - 14
31.4.5 FR Configurator ..... 31 - 15
31.4.6 FX Configurator-FP, FX3U-ENET-L Configuration tool ..... 31 - 15
31.4.7 RT ToolBox2 ..... 31 - 16
31.4.8 NC Configurator ..... 31 - 16
31.5 GOT Side Settings ..... 31 - 17
31.5.1 Setting communication interface ..... 31 - 17
31.6 Personal Computer Side Setting ..... 31 - 19
31.6.1 Accessing by GX Works3 ..... 31 - 19
31.6.2 Accessing by CW Configurator ..... 31 - 23
31.6.3 Accessing the PLC by GX Developer, PX Developer, or GX Configurator ..... 31 - 25
31.6.4 Accessing by GX Works2 ..... 31 - 29
31.6.5 Accessing by GX LogViewer ..... 31 - 37
31.6.6 Accessing PLC by FX GX Configurator-QP ..... 31 - 38
31.6.7 Accessing by the MT Developer ..... 31 - 39
31.6.8 Accessing by MT Works2 ..... 31 - 40
31.6.9 Accessing the servo amplifier by the MR Configurator ..... 31 - 41
31.6.10 Accessing the servo amplifier by the MR Configurator2 ..... 31 - 41
31.6.11 Accessing the inverter by the FR Configurator ..... 31 - 41
31.6.12 Accessing PLC by FX Configurator-FP ..... 31 - 42
31.6.13 Accessing by FX3U-ENET-L Configuration tool ..... 31 - 42
31.6.14 Accessing by RT ToolBox2 ..... 31 - 43

31.6.15 Accessing by NC Configurator ..... 31 - 45
31.6.16 Accessing by MELSOFT Navigator ..... 31 - 45
31.6.17 Accessing by the CPU Module Logging Configuration Tool ..... 31 - 46
31.6.18 Accessing by Setting/Monitoring tool for C Controller module ..... 31 - 46
31.7 Precautions ..... 31 - 48
31.7.1 Precautions common to each software ..... 31 - 48
31.7.2 When using GX Works3, GX Works2, GX Developer ..... 31 - 49
31.7.3 When using MT Works2, MT Developer ..... 31 - 51
31.7.4 When using MR Configurator2, MR Configurator ..... 31 - 51
31.7.5 When using FR Configurator ..... 31 - 51

APPENDICES

Appendix.1 External Dimensions ..... App - 1
Appendix.2 Usage Condition of Utility Function ..... App - 7
Appendix.3 Transportation Precautions ..... App - 11
Appendix.3.1 Relevant models ..... App - 11
Appendix.3.2 Transportation guidelines ..... App - 11

GT14 Handy GOT User's Manual 2/2

CONNECTIONS TO NON-MITSUBISHI PRODUCTS

32. CONNECTION TO IAI ROBOT CONTROLLER

32.1 Connectable Model List ..... 32 - 1
32.2 System Configuration ..... 32 - 2
32.2.1 Connecting to X-SEL, SSEL, ASEL, PSEL ..... 32 - 2
32.2.2 Connecting to PCON, ACON, SCON, ERC2 ..... 32 - 4
32.3 Connection Diagram ..... 32 - 18
32.3.1 RS-232 cable ..... 32 - 18
32.3.2 RS-422 cable ..... 32 - 21
32.4 GOT Side Settings ..... 32 - 23
32.4.1 Setting communication interface (Communication settings) ..... 32 - 23
32.4.2 Communication detail settings ..... 32 - 23
32.5 Robot Controller Side Setting ..... 32 - 25
32.5.1 Connecting to X-SEL ..... 32 - 25
32.5.2 Connecting to SSEL, ASEL, PSEL ..... 32 - 26
32.5.3 Connecting to PCON, ACON, SCON ..... 32 - 26
32.5.4 Connecting to ERC2 ..... 32 - 26
32.5.5 Station number setting ..... 32 - 27
32.6 Device Range that Can Be Set ..... 32 - 28
32.7 Precautions ..... 32 - 28

33. CONNECTION TO OMRON PLC

33.1 Connectable Model List ..... 33 - 1
33.2 Serial Connection ..... 33 - 2
33.2.1 System configuration for connecting to CPM1, CPM1A, CPM2A, CPM2C or CQM1 ..... 33 - 2
33.2.2 System configuration for connecting to CQM1H ..... 33 - 5
33.2.3 System configuration for connecting to CJ1H, CJ1G, CJ1M, CJ2H, or CJ2M ..... 33 - 8
33.2.4 System configuration for connecting to CP1H, CP1L, or CP1E ..... 33 - 11

33.2.5 System configuration for connecting to C200HS, C200H, C200HX, C200HG, or C200HE ... 33 - 14
33.2.6 System configuration for connecting to CS1H, CS1G, or CS1D ... 33 - 17
33.2.7 System configuration for connecting to C1000H or C2000H ... 33 - 20
33.2.8 System configuration for connecting to CV500, CV1000, CV2000, or CVM1 ... 33 - 21
33.2.9 Connection diagram ... 33 - 23
33.2.10 GOT side settings ... 33 - 28
33.2.11 PLC side setting ... 33 - 29
33.2.12 Connecting to CPM2A, CQM1, CQM1H, C200Hα or RS-232C adapter ... 33 - 29
33.2.13 Connecting to CJ1, CJ2, CS1, CP1H, CP1L, or CP1E ... 33 - 30
33.2.14 Connecting to CV500/CV1000/CV2000 or CVM1 ... 33 - 31
33.2.15 Connecting to connection cable ... 33 - 32
33.2.16 Connecting to rack type host link unit ... 33 - 32
33.2.17 Connecting to serial communication unit ... 33 - 35
33.2.18 Connecting to communication board, serial communication board (CQM1-SCB41) ... 33 - 35
33.2.19 Connecting to serial communication board (CS1W-SCB21(-V1), CS1W-SCB41(-V1)) ... 33 - 36
33.2.20 Connecting to RS-422A/485 Option board ... 33 - 37
33.2.21 Connecting to RS-422A converter ... 33 - 37
33.3 Ethernet Connection ... 33 - 38
33.3.1 System configuration ... 33 - 38
33.3.2 GOT side settings ... 33 - 40
33.3.3 PLC side setting ... 33 - 42
33.3.4 Precautions ... 33 - 43
33.4 Device Range that Can Be Set ... 33 - 43

34. CONNECTION TO OMRON TEMPERATURE CONTROLLER

34.1 Connectable Model List ... 34 - 1
34.2 System Configuration ... 34 - 2
34.2.1 Connecting to the THERMAC NEO series ... 34 - 2
34.2.2 Connecting to the INPANEL NEO ... 34 - 5
34.3 Connection Diagram ... 34 - 7
34.3.1 RS-232 cable ... 34 - 7
34.3.2 RS-485 cable ... 34 - 9
34.4 GOT Side Settings ... 34 - 10
34.4.1 Setting communication interface (Communication settings) ... 34 - 10
34.4.2 Communication detail settings ... 34 - 10
34.5 Temperature Controller Side Setting ... 34 - 11
34.5.1 Connecting to E5AN, E5EN, E5CN, E5GN ... 34 - 11
34.5.2 Connecting to E5ZN ... 34 - 11
34.5.3 Connecting to interface converter (K3SC-10) ... 34 - 11
34.5.4 Station number setting ... 34 - 12
34.6 Device Range that Can Be Set ... 34 - 13
34.7 Precautions ... 34 - 13

35. CONNECTION TO KEYENCE PLC

35.1 Connectable Model List ... 35 - 1
35.2 Serial Connection ... 35 - 2
35.2.1 System configuration for connecting KV-5500,KV-5000 ... 35 - 2
35.2.2 Connecting to KV-3000 ... 35 - 4

35.2.3 Connecting to KV-1000 ..... 35 - 7
35.2.4 Connecting to KV-700 ..... 35 - 10
35.2.5 Connection diagram ..... 35 - 13
35.2.6 GOT side settings ..... 35 - 16
35.2.7 PLC side setting ..... 35 - 17
35.3 Ethernet Connection ..... 35 - 19
35.3.1 System configuration for connecting to KV-700/1000/3000/5000/5500 ..... 35 - 19
35.3.2 GOT side settings ..... 35 - 20
35.3.3 PLC side setting ..... 35 - 21
35.4 Device Range that Can Be Set ..... 35 - 22

36. CONNECTION TO KOYO EI PLC

36.1 Connectable Model List ..... 36 - 1
36.2 System Configuration ..... 36 - 2
36.2.1 Connecting to SU-5E, SU-6B, SU-5M, or SU-6M ..... 36 - 2
36.2.2 Connecting to DirectLOGIC 05 or DirectLOGIC 06 series ..... 36 - 7
36.2.3 Connecting to D2-240, D2-250-1 or D2-260 ..... 36 - 11
36.2.4 Connecting to PZ ..... 36 - 14
36.3 Connection Diagram ..... 36 - 18
36.3.1 RS-232 cable ..... 36 - 18
36.3.2 RS-422 cable ..... 36 - 19
36.4 GOT Side Settings ..... 36 - 29
36.4.1 Setting communication interface (Communication settings) ..... 36 - 29
36.4.2 Communication detail settings ..... 36 - 29
36.5 PLC Side Setting ..... 36 - 30
36.5.1 Connecting to SU-5E/6B ..... 36 - 30
36.5.2 Connecting to SU-5M/6M ..... 36 - 31
36.5.3 Connecting to DirectLOGIC 05 series or DirectLOGIC 06 series ..... 36 - 31
36.5.4 Connecting to DirectLOGIC 205 series ..... 36 - 31
36.5.5 Connecting to PZ Series ..... 36 - 31
36.5.6 Connecting to U-01DM ..... 36 - 32
36.5.7 Connecting to D0-DCM ..... 36 - 33
36.5.8 Connecting to D2-DCM ..... 36 - 33
36.5.9 Station number setting ..... 36 - 33
36.6 Device Range that Can Be Set ..... 36 - 34

37. CONNECTION TO JTEKT PLC

37.1 Connectable Model List ..... 37 - 1
37.2 System Configuration ..... 37 - 2
37.2.1 Connecting to PC3JG, PC3JG-P, PC3JD, or PC3JD-C ..... 37 - 2
37.2.2 Connecting to PC3J or PC3JL ..... 37 - 5
37.2.3 Connecting to PC2J, PC2JS or PC2JR ..... 37 - 8
37.2.4 Connecting to PC2JC, PC216P or PC2J16PR ..... 37 - 11
37.3 Connection Diagram ..... 37 - 14
37.3.1 RS-232 cable ..... 37 - 14
37.3.2 RS-422 cable ..... 37 - 15
37.4 GOT Side Settings ..... 37 - 17
37.4.1 Setting communication interface (Communication settings) ..... 37 - 17
37.4.2 Communication detail settings ..... 37 - 17

37.5 PLC Side Setting ..... 37 - 18
37.5.1 Connecting to PC3JG, PC3JG-P, PC3JD, PC3JD-C, PC3J, PC3JL, PC2J, PC2JS or PC2JR ..... 37 - 18
37.5.2 Connecting to PC2JC ..... 37 - 18
37.5.3 Connecting to PC2J16P or PC2J16PR ..... 37 - 19
37.5.4 RS-232/RS-422 interface converter setting ..... 37 - 19
37.5.5 Link unit setting ..... 37 - 20
37.5.6 Station number setting ..... 37 - 20
37.6 Device Range that Can Be Set ..... 37 - 21
37.7 Precautions ..... 37 - 21

38. CONNECTION TO SHARP PLC

38.1 Connectable Model List ..... 38 - 1
38.2 System Configuration ..... 38 - 2
38.2.1 Connecting to JW-21CU or JW-22CU ..... 38 - 2
38.2.2 Connecting to JW-31CUH, JW-32CUH or JW-33CUH ..... 38 - 4
38.2.3 Connecting to JW-50CUH, JW-70CUH, JW-100CUH or JW-100CU ..... 38 - 6
38.2.4 Connecting to Z-512J ..... 38 - 7
38.3 Connection Diagram ..... 38 - 9
38.3.1 RS-232 cable ..... 38 - 9
38.3.2 RS-422 cable ..... 38 - 10
38.4 GOT Side Settings ..... 38 - 13
38.4.1 Setting communication interface (Communication settings) ..... 38 - 13
38.4.2 Communication detail settings ..... 38 - 13
38.5 PLC Side Setting ..... 38 - 14
38.5.1 Connecting to JW-22CU, JW-70CUH, JW-100CUH or JW-100CU ..... 38 - 14
38.5.2 Connecting to JW-32CUH, JW-33CUH or Z-512J ..... 38 - 15
38.5.3 Connecting to the link unit (JW-21CM) ..... 38 - 15
38.5.4 Connecting to the link unit (JW-10CM or ZW-10CM) ..... 38 - 16
38.6 Device Range that Can Be Set ..... 38 - 17

39. CONNECTION TO SHINKO TECHNOS INDICATING CONTROLLER

39.1 Connectable Model List ..... 39 - 1
39.2 System Configuration ..... 39 - 2
39.2.1 Connecting to ACS-13A, JC, JCM-33A, JIR-301-M, PCD-300 Series, PC-900 Series (PC-955-□/M, C5, PC-935-□/M, C5) ..... 39 - 2
39.2.2 Connecting to FCD-100, FCR-100, FCR-23A, FIR Series, PC-900 Series (PC-955□/M, C, PC-935-□/M, C) ..... 39 - 3
39.2.3 Connecting to DCL-33A Series ..... 39 - 5
39.3 Connection Diagram ..... 39 - 7
39.3.1 RS-232 cable ..... 39 - 7
39.3.2 RS-485 cable ..... 39 - 8
39.4 GOT Side Settings ..... 39 - 9
39.4.1 Setting communication interface (Communication settings) ..... 39 - 9
39.4.2 Communication detail settings ..... 39 - 9

39.5 Indicating Controller Side Setting ..... 39 - 10
39.5.1 Connecting to ACS-13A, DCL- 33A, JC, JCM-33A, JIR-301- M, PCD-300 Series, PC-900 Series (PC-955-□/M, C5, PC- 935-□/M, C5) ..... 39 - 10
39.5.2 Connecting to FCD-100, FCR- 100, FCR-23A, FIR Series, PC-900 Series (PC-955-□/M, C, PC-935-□/M, C) ..... 39 - 10
39.5.3 Connecting to communication converter (IF-400) ..... 39 - 10
39.5.4 Station number setting ..... 39 - 11
39.6 Device Range that Can Be Set ..... 39 - 12
39.7 Precautions ..... 39 - 12

40. CONNECTION TO CHINO CONTROLLER

40.1 Connectable Model List ..... 40 - 1
40.2 System Configuration ..... 40 - 2
40.2.1 Connecting to LT230, LT300, LT400, LT830, DZ1000, DZ2000, DB1000, DB2000 Series ..... 40 - 2
40.2.2 Connecting to KP1000, KP2000, AL3000, AH3000, SE3000, KE3000, LE5100, LE5200, LE5300, or JU Series ..... 40 - 5
40.2.3 Connecting to GT120 Series ..... 40 - 8
40.3 Connection Diagram ..... 40 - 10
40.3.1 RS-232 cable ..... 40 - 10
40.3.2 RS-422 cable ..... 40 - 11
40.3.3 RS-485 cable ..... 40 - 14
40.4 GOT Side Settings ..... 40 - 16
40.4.1 Setting communication interface (Communication settings) ..... 40 - 16
40.4.2 Communication detail settings ..... 40 - 16
40.5 Controller Side Setting ..... 40 - 17
40.5.1 Connecting to LT230, LT300 Series ..... 40 - 17
40.5.2 Connecting to LT400, LT830 Series ..... 40 - 17
40.5.3 Connecting to DZ1000, DZ2000 Series ..... 40 - 17
40.5.4 Connecting to DB1000, DB2000 Series ..... 40 - 18
40.5.5 Connecting to GT120 Series ..... 40 - 18
40.5.6 Connecting to KP1000, KP2000 ..... 40 - 18
40.5.7 Connecting to AL3000, AH3000 ..... 40 - 18
40.5.8 Connecting to SE3000 ..... 40 - 19
40.5.9 Connecting to JU ..... 40 - 19
40.5.10 Connecting to KE3000 ..... 40 - 20
40.5.11 Connecting to LE5100, LE5200, LE5300 ..... 40 - 20
40.5.12 Connecting to converter SC8-10 ..... 40 - 21
40.5.13 Station number setting ..... 40 - 21
40.6 Device Range that Can Be Set ..... 40 - 22
40.7 Precautions ..... 40 - 22

41. CONNECTION TO TOSHIBA PLC

41.1 Connectable Model List ..... 41 - 1
41.2 Serial Connection ..... 41 - 2
41.2.1 System configuration for connecting to PROSEC T Series ..... 41 - 2
41.2.2 System configuration for connecting to PROSEC V Series ..... 41 - 4
41.2.3 Connection diagram ..... 41 - 6
41.2.4 GOT side settings ..... 41 - 10

41.2.5 PLC side setting ..... 41 - 11
41.3 Ethernet Connection ..... 41 - 12
41.3.1 Connecting to Unified Controller nv Series ..... 41 - 12
41.3.2 GOT side settings ..... 41 - 13
41.3.3 PLC side setting ..... 41 - 14
41.3.4 Precautions ..... 41 - 15
41.4 Device Range that Can Be Set ..... 41 - 15

42. CONNECTION TO TOSHIBA MACHINE PLC

42.1 Connectable Model List ..... 42 - 1
42.2 System Configuration ..... 42 - 2
42.2.1 Connecting to TC3, TC6, TC8 ..... 42 - 2
42.2.2 Connecting to TS2000, TS2100 ..... 42 - 3
42.3 Connection Diagram ..... 42 - 4
42.3.1 RS-232 cable ..... 42 - 4
42.4 GOT Side Settings ..... 42 - 6
42.4.1 Setting communication interface (Communication settings) ..... 42 - 6
42.4.2 Communication detail settings ..... 42 - 6
42.5 PLC Side Setting ..... 42 - 7
42.5.1 Connecting to TC3, TC8 series ..... 42 - 7
42.5.2 Connecting to TC6 series ..... 42 - 7
42.5.3 Connecting to TS2000, TS2100 ..... 42 - 7
42.6 Device Range that Can Be Set ..... 42 - 8

43. CONNECTION TO PANASONIC SERVO AMPLIFIER

43.1 Connectable Model List ..... 43 - 1
43.2 System Configuration ..... 43 - 1
43.2.1 Connecting to MINAS A4, MINAS A4F, MINAS A4L, MINAS A5 series ..... 43 - 1
43.3 Connection Diagram ..... 43 - 3
43.3.1 RS-232 cable ..... 43 - 3
43.3.2 RS-485 cable ..... 43 - 4
43.4 GOT Side Settings ..... 43 - 5
43.4.1 Setting communication interface (Communication settings) ..... 43 - 5
43.4.2 Communication detail settings ..... 43 - 5
43.5 Setting on Servo Amplifier Side ..... 43 - 6
43.5.1 Connecting to MINAS A4/A4F/A4L ..... 43 - 6
43.5.2 Connecting to MINAS A5 ..... 43 - 6
43.5.3 Station number setting ..... 43 - 6
43.6 Device Range that Can Be Set ..... 43 - 7
43.7 Precautions ..... 43 - 7

44. CONNECTION TO PANASONIC INDUSTRIAL DEVICES SUNX PLC

44.1 Connectable Model List ..... 44 - 1
44.2 System Configuration ..... 44 - 2
44.2.1 Connecting to FP0-C16CT, FP0-C32CT, or FP0R ..... 44 - 2
44.2.2 Connecting to FP1-C24C or FP1-C40C ..... 44 - 3
44.2.3 Connecting to FP2 or FP2SH ..... 44 - 5

44.2.4 Connecting to FP3 or FP5 ..... 44 - 8
44.2.5 Connecting to FP10(S) ..... 44 - 11
44.2.6 Connecting to FP-M(C20TC) or FP-M(C32TC) ..... 44 - 14
44.2.7 Connecting to FP10SH ..... 44 - 16
44.2.8 Connecting to FPΣ ..... 44 - 18
44.2.9 Connecting to FP-X ..... 44 - 20
44.3 Connection Diagram ..... 44 - 23
44.3.1 RS-232 cable ..... 44 - 23
44.3.2 RS-422 cable ..... 44 - 27
44.4 GOT Side Settings ..... 44 - 29
44.4.1 Setting communication interface (Communication settings) ..... 44 - 29
44.4.2 Communication detail settings ..... 44 - 29
44.5 PLC Side Setting ..... 44 - 30
44.6 Device Range that Can Be Set ..... 44 - 31

45. CONNECTION TO HITACHI IES PLC

45.1 Connectable Model List ..... 45 - 1
45.2 System Configuration ..... 45 - 2
45.2.1 Connection to large-sized H series ..... 45 - 2
45.2.2 Connecting to H-200 to 252 series, H series board type or EH-150 series ..... 45 - 5
45.3 Connection Diagram ..... 45 - 8
45.3.1 RS-232 cable ..... 45 - 8
45.3.2 RS-422 cable ..... 45 - 9
45.4 GOT Side Settings ..... 45 - 11
45.4.1 Setting communication interface (Communication settings) ..... 45 - 11
45.4.2 Communication detail settings ..... 45 - 11
45.5 PLC Side Setting ..... 45 - 13
45.6 Device Range that Can Be Set ..... 45 - 14

46. CONNECTION TO HITACHI PLC

46.1 Connectable Model List ..... 46 - 1
46.2 System Configuration ..... 46 - 2
46.2.1 Connecting to S10V ..... 46 - 2
46.2.2 Connecting to S10mini ..... 46 - 3
46.3 Connection Diagram ..... 46 - 5
46.3.1 RS-232 cable ..... 46 - 5
46.3.2 RS-422 cable ..... 46 - 6
46.4 GOT Side Settings ..... 46 - 7
46.4.1 Setting communication interface (Communication settings) ..... 46 - 7
46.4.2 Communication detail settings ..... 46 - 7
46.5 PLC Side Setting ..... 46 - 8
46.5.1 Connecting to communication module ..... 46 - 8
46.6 Device Range that Can Be Set ..... 46 - 9

47. CONNECTION TO FUJI PLC

47.1 Connectable Model List ..... 47 - 1

47.2 Serial Connection ..... 47 - 2
47.2.1 System Configuration for connecting to MICREX-F55 ..... 47 - 2
47.2.2 System Configuration for connecting to MICREX-F70 ..... 47 - 7
47.2.3 System Configuration for connecting to MICREX-F120S/140S/15[]S ..... 47 - 13
47.2.4 System Configuration for connecting to MICREX-SX SPH ..... 47 - 20
47.2.5 Connection Diagram ..... 47 - 22
47.2.6 GOT Side Settings ..... 47 - 28
47.2.7 PLC Side Setting ..... 47 - 30
47.3 Ethernet Connection ..... 47 - 35
47.3.1 System Configuration for connecting to MICREX-SX SPH ..... 47 - 35
47.3.2 GOT Side Settings ..... 47 - 36
47.3.3 PLC side setting (MICREX-SX SPH) ..... 47 - 38
47.4 Device Range that Can Be Set ..... 47 - 39
47.5 Precautions ..... 47 - 39

48. CONNECTION TO FUJI TEMPERATURE CONTROLLER

48.1 Connectable Model List ..... 48 - 1
48.2 System Configuration ..... 48 - 1
48.2.1 Connecting to PXR3, PXR4, PXR5 or PXR9 ..... 48 - 1
48.2.2 Connecting to PXG4, PXG5, PXG9 or PXH9 ..... 48 - 3
48.3 Connection Diagram ..... 48 - 6
48.3.1 RS-232 cable ..... 48 - 6
48.3.2 RS-485 cable ..... 48 - 8
48.4 GOT Side Settings ..... 48 - 10
48.4.1 Setting communication interface (Communication settings) ..... 48 - 10
48.4.2 Communication detail settings ..... 48 - 10
48.5 Temperature Controller Side Setting ..... 48 - 11
48.5.1 Connecting to PXR3/4/5/9 ..... 48 - 11
48.5.2 Connecting to PXG4/5/9 ..... 48 - 11
48.5.3 Connecting to PXH9 ..... 48 - 11
48.5.4 Connecting to interface converter (RC-77) ..... 48 - 12
48.5.5 Connecting to interface converter (SI-30A) ..... 48 - 12
48.5.6 Connecting to interface converter (KS-485) ..... 48 - 13
48.5.7 Connecting to interface converter (K3SC-10) ..... 48 - 13
48.5.8 Station number setting ..... 48 - 14
48.6 Device Range that Can Be Set ..... 48 - 15
48.7 Precautions ..... 48 - 15

49. CONNECTION TO YASKAWA PLC

49.1 Connectable Model List ..... 49 - 1
49.2 Serial Connection ..... 49 - 2
49.2.1 System configuration for connecting to GL120 or GL130 ..... 49 - 2
49.2.2 System configuration for connecting to GL60S, GL60H or GL70H ..... 49 - 3
49.2.3 System configuration for connecting to MP-920/930, CP-9300MS/9200(H) or PROGIC-8 ..... 49 - 5
49.2.4 System configuration for connecting to MP-940 ..... 49 - 7
49.2.5 System configuration for connecting to CP-9200SH or CP-317 ..... 49 - 9
49.2.6 System configuration for connecting to MP2200, MP2300 or MP2300S ..... 49 - 11
49.2.7 Connection diagram ..... 49 - 13

49.2.8 GOT side settings ..... 49 - 19
49.2.9 PLC side setting ..... 49 - 20
49.3 Ethernet Connection ..... 49 - 23
49.3.1 System configuration for connecting to MP-920 or MP2200 or MP2300 or MP2300S or CP-9200SH or CP-312 or CP-317 ..... 49 - 23
49.3.2 GOT side settings ..... 49 - 24
49.3.3 PLC side setting (MP2000 series, MP920 series) ..... 49 - 25
49.3.4 PLC side setting (CP-9200SH series, CP-312 series) ..... 49 - 30
49.3.5 Precautions ..... 49 - 33
49.4 Device Range that Can Be Set ..... 49 - 33

50. CONNECTION TO YOKOGAWA PLC

50.1 Connectable Model List ..... 50 - 1
50.2 Serial Connection ..... 50 - 2
50.2.1 System configuration for connecting to FA-M3/M3V ..... 50 - 2
50.2.2 System configuration for connecting to FA500 ..... 50 - 7
50.2.3 System configuration for connecting to STARDOM ..... 50 - 8
50.2.4 Connection diagram ..... 50 - 10
50.2.5 GOT side settings ..... 50 - 14
50.2.6 PLC side setting ..... 50 - 15
50.2.7 Connecting to CPU port/D-sub 9-pin conversion cable, SIO port adapter cable ..... 50 - 15
50.2.8 Connecting to PC link module (F3LC01-1N, F3LC11-1N, F3LC11-2N, F3LC11-2F) ..... 50 - 16
50.2.9 Connecting to PC link module (F3LC11-1F, F3LC12-1F) ..... 50 - 17
50.2.10 Connecting to PC link module (LC01-0N, LC02-0N) ..... 50 - 18
50.2.11 Connecting to STARDOM ..... 50 - 19
50.2.12 Precautions ..... 50 - 20
50.3 Ethernet Connection ..... 50 - 21
50.3.1 System configuration for connecting to FA-M3/M3V ..... 50 - 21
50.3.2 GOT side settings ..... 50 - 22
50.3.3 PLC side setting ..... 50 - 23
50.3.4 Connecting to Ethernet interface module (F3LE01-5T, F3LE11-0T) ..... 50 - 23
50.3.5 Connecting to Ethernet interface module (F3LE12-0T) ..... 50 - 24
50.3.6 Connecting to F3SP66, F3SP67, F3SP71-4N (Built-In Ethernet Interface) ..... 50 - 25
50.3.7 Precautions ..... 50 - 25
50.4 Device Range that Can Be Set ..... 50 - 26

51. CONNECTION TO YOKOGAWA TEMPERATURE CONTROLLER

51.1 Connectable Model List ..... 51 - 1
51.2 System Configuration ..... 51 - 2
51.2.1 Connecting to GREEN Series ..... 51 - 2
51.2.2 Connecting to UT100 ..... 51 - 8
51.2.3 Connecting to UT2000 ..... 51 - 10
51.2.4 Connecting to UTAdvanced Series ..... 51 - 13
51.3 Connection Diagram ..... 51 - 18
51.3.1 RS-232 cable ..... 51 - 18
51.3.2 RS-485 cable ..... 51 - 19
51.4 GOT Side Settings ..... 51 - 24
51.4.1 Setting communication interface (Communication settings) ..... 51 - 24
51.4.2 Communication detail settings ..... 51 - 24

51.5 Temperature Controller Side Setting ..... 51 - 25
51.5.1 Connecting to GREEN Series ..... 51 - 25
51.5.2 Connecting to UT100 Series ..... 51 - 25
51.5.3 Connecting to UT2000 Series ..... 51 - 25
51.5.4 Connecting to UTAdvanced Series ..... 51 - 26
51.5.5 Connecting to converter (ML2-□) ..... 51 - 26
51.5.6 Station number setting ..... 51 - 27
51.6 Device Range that Can Be Set ..... 51 - 28
51.7 Precautions ..... 51 - 28

52. CONNECTION TO AZBIL CONTROL EQUIPMENT

52.1 Connectable Model List ..... 52 - 1
52.2 System Configuration ..... 52 - 3
52.2.1 Connecting to DMC10 ..... 52 - 3
52.2.2 Connecting to DMC50 ..... 52 - 4
52.2.3 Connecting to SDC15, SDC25/26 or SDC35/36 ..... 52 - 6
52.2.4 Connecting to SDC20/21 ..... 52 - 8
52.2.5 Connecting to SDC30/31 ..... 52 - 12
52.2.6 Connecting to SDC40A/40B/40G ..... 52 - 15
52.2.7 Connecting to SDC45/46, CMS, MQV, MPC, MVF, RX ..... 52 - 19
52.2.8 Connecting to CMF050, CML, PBC201-VN2, AUR350C, AUR450C, CMC10B ..... 52 - 21
52.2.9 Connecting to AHC2001 ..... 52 - 24
52.2.10 Connecting to NX series ..... 52 - 27
52.3 Connection Diagram ..... 52 - 28
52.3.1 RS-232 cable ..... 52 - 28
52.3.2 RS-485 cable ..... 52 - 30
52.4 GOT Side Settings ..... 52 - 36
52.4.1 Setting communication interface (Communication settings) ..... 52 - 36
52.4.2 Communication detail settings ..... 52 - 36
52.5 Control Equipment Side Setting ..... 52 - 38
52.5.1 Connecting to DMC10 ..... 52 - 38
52.5.2 Connecting to SDC40A/40B/40G ..... 52 - 38
52.5.3 Connecting to SDC15, SDC25/26 or SDC35/36 ..... 52 - 38
52.5.4 Connecting to SDC20/21, SDC30/31 ..... 52 - 39
52.5.5 Connecting to CMC10L ..... 52 - 39
52.5.6 Connecting to DMC50 ..... 52 - 40
52.5.7 Connecting to SDC45/46 ..... 52 - 40
52.5.8 Connecting to CMS, CMF015 ..... 52 - 40
52.5.9 Connecting to CML, CMF050 ..... 52 - 40
52.5.10 Connecting to MQV ..... 52 - 40
52.5.11 Connecting to MPC ..... 52 - 41
52.5.12 Connecting to PBC201-VN2 ..... 52 - 41
52.5.13 Connecting to MVF ..... 52 - 41
52.5.14 Connecting to AUR350C, AUR450C ..... 52 - 42
52.5.15 Connecting to RX ..... 52 - 42
52.5.16 Connecting to CMC10B ..... 52 - 42
52.5.17 Connecting to AHC2001 CPU module ..... 52 - 43
52.5.18 Connecting to AHC2001 SCU module ..... 52 - 43
52.5.19 Station number setting ..... 52 - 43
52.6 Device Range that Can Be Set ..... 52 - 44

52.7 Precautions ..... 52 - 44

53. CONNECTION TO RKC TEMPERATURE CONTROLLER

53.1 Connectable Model List ..... 53 - 1
53.2 System Configuration ..... 53 - 2
53.2.1 Connecting to H-PCP-J ..... 53 - 2
53.2.2 Connecting to H-PCP-A or H-PCP-B ..... 53 - 6
53.2.3 Connecting to SRZ ..... 53 - 9
53.2.4 Connecting to CB Series (CB100, CB400, CB500, CB700, CB900) ..... 53 - 13
53.2.5 Connecting to FB series (FB100, FB400 or FB900) ..... 53 - 15
53.2.6 Connecting to RB Series (RB100, RB400, RB500, RB700, RB900) ..... 53 - 19
53.2.7 Connecting to PF900/901, HA400/401, HA900/901, RMC500, MA900/MA901, AG500, THV-A1, SA100/200 ..... 53 - 21
53.2.8 Connecting to SRX ..... 53 - 26
53.2.9 Connecting to SB series (SB1) ..... 53 - 28
53.2.10 Connecting to B400 ..... 53 - 29
53.3 Connection Diagram ..... 53 - 31
53.3.1 RS-232 cable ..... 53 - 31
53.3.2 RS-422 cable ..... 53 - 34
53.3.3 RS-485 cable ..... 53 - 36
53.4 GOT Side Settings ..... 53 - 37
53.4.1 Setting communication interface (Communication settings) ..... 53 - 37
53.4.2 Communication detail settings ..... 53 - 37
53.5 Temperature Controller Side Setting ..... 53 - 38
53.5.1 Connecting to H-PCP-J ..... 53 - 38
53.5.2 Connecting to H-PCP-A, H-PCP-B ..... 53 - 39
53.5.3 Connecting to Z-TIO, Z-DIO, Z-CT ..... 53 - 40
53.5.4 Connecting to Z-COM ..... 53 - 41
53.5.5 Connecting to CB Series ..... 53 - 42
53.5.6 Connecting to FB Series ..... 53 - 42
53.5.7 Connecting to RB Series ..... 53 - 43
53.5.8 Connecting to PF900 ..... 53 - 43
53.5.9 Connecting to HA400, HA900 ..... 53 - 43
53.5.10 Connecting to AG500 ..... 53 - 43
53.5.11 Connecting to RMC500 ..... 53 - 44
53.5.12 Connecting to MA900, MA901 ..... 53 - 44
53.5.13 Connecting to THV-A1 ..... 53 - 44
53.5.14 Connecting to SA100/SA200 ..... 53 - 44
53.5.15 Connecting to X-TIO Module ..... 53 - 45
53.5.16 Connecting to SB Series ..... 53 - 45
53.5.17 Connecting to B400 ..... 53 - 46
53.5.18 Station number setting ..... 53 - 47
53.6 Device Range that Can Be Set ..... 53 - 48
53.7 Precautions ..... 53 - 48

54. CONNECTION TO ALLEN-BRADLEY PLC

54.1 Connectable Model List ..... 54 - 1
54.2 Serial connection ..... 54 - 2
54.2.1 System configuration for connecting to SLC500 Series ..... 54 - 2

54.2.2 System configuration for connecting to MicroLogix1000/1200/1400/1500 Series ..... 54 - 4
54.2.3 System configuration for connecting to Control/Compact/FlexLogix Series ..... 54 - 6
54.2.4 Connection diagram ..... 54 - 7
54.2.5 GOT side settings ..... 54 - 10
54.2.6 PLC side setting ..... 54 - 11
54.3 Ethernet Connection ..... 54 - 12
54.3.1 System configuration for connecting to ControlLogix or CompactLogix ..... 54 - 12
54.3.2 GOT Side Settings ..... 54 - 14
54.3.3 PLC side setting ..... 54 - 15
54.3.4 Precautions ..... 54 - 16
54.4 Device Range that Can Be Set ..... 54 - 16

55. CONNECTION TO GE PLC

55.1 Connectable Model List ..... 55 - 1
55.2 System Configuration ..... 55 - 2
55.2.1 Connecting to Series90-30 ..... 55 - 2
55.2.2 Connecting to Series90-70 ..... 55 - 8
55.2.3 Connecting to VersaMax Micro ..... 55 - 11
55.3 Connection Diagram ..... 55 - 17
55.3.1 RS-232 cable ..... 55 - 17
55.3.2 RS-422 cable ..... 55 - 19
55.4 GOT Side Settings ..... 55 - 24
55.4.1 Setting communication interface (Communication settings) ..... 55 - 24
55.4.2 Communication detail settings ..... 55 - 24
55.5 PLC Side Setting ..... 55 - 25
55.5.1 Connecting to Series 90-30 ..... 55 - 25
55.5.2 Connecting to VersaMaxMicro ..... 55 - 25
55.5.3 Connecting to IC693CMM311 ..... 55 - 26
55.5.4 Connecting to IC697CMM711 ..... 55 - 26
55.5.5 Station number setting ..... 55 - 26
55.6 Device Range that Can Be Set ..... 55 - 27
55.7 Precautions ..... 55 - 27

56. CONNECTION TO LS INDUSTRIAL SYSTEMS PLC

56.1 Connectable Model List ..... 56 - 1
56.2 System Configuration ..... 56 - 2
56.2.1 Connecting to K80S or K120S ..... 56 - 2
56.2.2 Connecting to K200S ..... 56 - 5
56.2.3 Connecting to K300S ..... 56 - 8
56.3 Connection Diagram ..... 56 - 11
56.3.1 RS-232 cable ..... 56 - 11
56.3.2 RS-422 cable ..... 56 - 12
56.4 GOT Side Settings ..... 56 - 14
56.4.1 Setting communication interface (Communication settings) ..... 56 - 14
56.4.2 Communication detail settings ..... 56 - 14
56.5 PLC Side Setting ..... 56 - 15
56.5.1 Connecting to PLC CPU ..... 56 - 15
56.5.2 Connecting to Cnet I/F module ..... 56 - 15

56.6 Device Range that Can Be Set ..... 56 - 15

57. CONNECTION TO SICK SAFETY CONTROLLER

57.1 Connectable Model List ..... 57 - 1
57.2 System Configuration ..... 57 - 1
57.2.1 Connecting to Flexi Soft ..... 57 - 1
57.3 GOT Side Settings ..... 57 - 2
57.3.1 Setting communication interface (Communication settings) ..... 57 - 2
57.3.2 Communication detail settings ..... 57 - 2
57.4 PLC Side Setting ..... 57 - 3
57.4.1 Connecting to Flexi Soft ..... 57 - 3
57.5 Device Range that Can Be Set ..... 57 - 3

58. CONNECTION TO SIEMENS PLC

58.1 Connectable Model List ..... 58 - 1
58.2 Serial Connection ..... 58 - 1
58.2.1 System configuration for connecting to SIMATIC S7-300/400 series ..... 58 - 1
58.2.2 System configuration for connecting to SIMATIC S7-200 ..... 58 - 4
58.2.3 Connection diagram ..... 58 - 5
58.2.4 GOT side settings ..... 58 - 6
58.2.5 PLC side setting ..... 58 - 7
58.2.6 Precautions ..... 58 - 8
58.3 Ethernet Connection ..... 58 - 9
58.3.1 System configuration for connecting to SIMATIC S7-300/400 series (Ethernet connection type: FETCH/WRITE) ..... 58 - 9
58.3.2 System configuration for connecting to SIMATIC S7-200/300/400/1200 (Ethernet connection type: OP communication) ..... 58 - 10
58.3.3 GOT side settings ..... 58 - 12
58.3.4 PLC side setting ..... 58 - 14
58.3.5 Precautions ..... 58 - 15
58.4 Device Range that Can Be Set ..... 58 - 15

59. CONNECTION TO HIRATA CORPORATION HNC CONTROLLER

60. CONNECTION TO MURATEC CONTROLLER

MICROCOMPUTER CONNECTION

61. MICROCOMPUTER CONNECTION (SERIAL)

61.1 Microcomputer Connection (Serial) ..... 61 - 1
61.2 System Configuration ..... 61 - 3
61.2.1 For the microcomputer connection (serial) ..... 61 - 3
61.3 Connection Diagram ..... 61 - 5
61.3.1 RS-232 cable ..... 61 - 5
61.3.2 RS-422 cable ..... 61 - 6
61.4 Device Data Area ..... 61 - 7
61.4.1 D devices ..... 61 - 8
61.4.2 R devices ..... 61 - 11
61.4.3 L devices ..... 61 - 12

61.4.4 M devices ..... 61 - 12
61.4.5 SD devices ..... 61 - 13
61.4.6 SM devices ..... 61 - 16
61.5 Message Formats ..... 61 - 18
61.5.1 Data format type and application ..... 61 - 18
61.5.2 List of commands ..... 61 - 19
61.5.3 Formats 1, 2 (GOT-A900 Series microcomputer connection) ..... 61 - 22
61.5.4 Formats 3 to 6 (A compatible 1C frame) ..... 61 - 34
61.5.5 Formats 7 to 10 (QnA compatible 3C/4C frame) ..... 61 - 39
61.5.6 Formats 11 to 13 (Digital Electronics Corporation's memory link method) ..... 61 - 45
61.5.7 Formats 14, 15 (GOT-F900 Series microcomputer connection) ..... 61 - 54
61.6 GOT Side Settings ..... 61 - 67
61.6.1 Setting communication interface (Communication settings) ..... 61 - 67
61.6.2 Communication detail settings ..... 61 - 67
61.7 System Configuration Examples ..... 61 - 69
61.8 Device Range that Can Be Set ..... 61 - 72
61.9 Precautions ..... 61 - 72

62. MICROCOMPUTER CONNECTION (ETHERNET)

62.1 Microcomputer Connection (Ethernet) ..... 62 - 1
62.2 System Configuration ..... 62 - 1
62.2.1 For the microcomputer connection (Ethernet) ..... 62 - 1
62.3 Device Data Area ..... 62 - 2
62.3.1 D devices ..... 62 - 3
62.3.2 R devices ..... 62 - 6
62.3.3 L devices ..... 62 - 7
62.3.4 M devices ..... 62 - 7
62.3.5 SD devices ..... 62 - 8
62.3.6 SM devices ..... 62 - 11
62.4 Message Formats ..... 62 - 13
62.4.1 Data format type and application ..... 62 - 13
62.4.2 List of commands ..... 62 - 14
62.4.3 Formats 1, 2 (GOT-A900 Series microcomputer connection) ..... 62 - 16
62.4.4 Formats 3, 4 (GOT-F900 series microcomputer connection) ..... 62 - 28
62.4.5 Format 5 (Digital Electronics Corporation's memory link method) ..... 62 - 42
62.4.6 Formats 6, 7 (4E frame) ..... 62 - 46
62.4.7 Formats 8, 9 (3E frame) ..... 62 - 56
62.5 GOT Side Settings ..... 62 - 66
62.5.1 Setting communication interface (Communication settings) ..... 62 - 66
62.5.2 Communication detail settings ..... 62 - 66
62.6 System Configuration Examples ..... 62 - 68
62.7 Device Range that Can Be Set ..... 62 - 68
62.8 Precautions ..... 62 - 68

MODBUS CONNECTIONS

63. MODBUS(R)/RTU CONNECTION

63.1 Connectable Model List ..... 63 - 1

63.2 System Configuration ..... 63 - 1
63.2.1 Connecting to MODBUS equipment ..... 63 - 1
63.3 Connection Diagram ..... 63 - 3
63.3.1 RS-232 cable ..... 63 - 3
63.3.2 RS-422/485 cable ..... 63 - 4
63.4 GOT Side Settings ..... 63 - 6
63.4.1 Setting communication interface (Communication settings) ..... 63 - 6
63.4.2 Communication detail settings ..... 63 - 6
63.5 MODBUS/RTU Equipment Side Setting ..... 63 - 7
63.5.1 Communication settings ..... 63 - 7
63.5.2 Station number setting ..... 63 - 9
63.6 Precautions ..... 63 - 10

64. MODBUS(R)/TCP CONNECTION

64.1 Connectable Model List ..... 64 - 1
64.2 System Configuration ..... 64 - 1
64.2.1 Connecting to MODBUS/TCP equipment ..... 64 - 1
64.3 GOT Side Settings ..... 64 - 2
64.3.1 Setting communication interface (Communication settings) ..... 64 - 2
64.3.2 Communication detail settings ..... 64 - 2
64.3.3 Ethernet setting ..... 64 - 3
64.4 PLC side setting ..... 64 - 3
64.5 Device Range that Can Be Set ..... 64 - 4
64.6 Example of Connection ..... 64 - 5
64.6.1 Connecting to SCHNEIDER PLC (Modicon Premium series and Modicon Quantum series) ..... 64 - 5
64.6.2 Connecting to YOKOGAWA PLC (STARDOM) ..... 64 - 7
64.7 Precautions ..... 64 - 10

CONNECTIONS TO PERIPHERAL EQUIPMENT

65. VNC(R) SERVER CONNECTION

65.1 Connectable Model List ..... 65 - 1
65.2 System Configuration ..... 65 - 1
65.3 GOT Side Settings ..... 65 - 2
65.3.1 VNC(R) server function setting ..... 65 - 2
65.3.2 Setting communication interface (Communication settings) ..... 65 - 2
65.4 Personal Computer Side Setting ..... 65 - 3

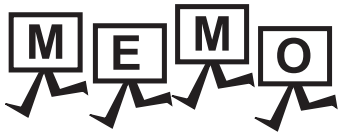
MEMO

MANUALS

The following table lists the manual relevant to this product.
Refer to each manual for any purpose.

Manual Name	Delivery method	Manual Number
GT Works3 Version1 Installation Procedure Manual	Enclosed in product	-
GT Designer3 Version1 Screen Design Manual (Fundamentals) 1/2, 2/2	*1	SH-080866ENG
GT Designer3 Version1 Screen Design Manual (Functions) 1/2, 2/2	*1	SH-080867ENG
GOT1000 Series Connection Manual (Mitsubishi Products) for GT Works3	*1	SH-080868ENG
GOT1000 Series Connection Manual (Non-Mitsubishi Products 1) for GT Works3	*1	SH-080869ENG
GOT1000 Series Connection Manual (Non-Mitsubishi Products 2) for GT Works3	*1	SH-080870ENG
GOT1000 Series Connection Manual (Microcomputer, MODBUS Products, Peripherals) for GT Works3	*1	SH-080871ENG
GOT1000 Series Connection Manual (α2 Connection) for GT Works3	*1	JY997D39201
GT Simulator3 Version1 Operating Manual for GT Works3	*1	SH-080861ENG
GOT1000 Series User's Manual (Extended Functions, Option Functions) for GT Works3	*1	SH-080863ENG

*1 Contact your local distributor.

QUICK REFERENCE

■ Creating a project

Obtaining the specifications and operation methods of GT Designer3	GT Designer3 Version1 Screen Design Manual (Fundamentals) 1/2, 2/2
Setting available functions on GT Designer3	
Creating a screen displayed on the GOT	
Obtaining useful functions to increase efficiency of drawing	
Setting details for figures and objects	GT Designer3 Version1 Screen Design Manual (Functions) 1/2, 2/2
Setting functions for the data collection or trigger action	
Setting functions to use peripheral devices	
Simulating a created project on a personal computer	GT Simulator3 Version1 Operating Manual for GT Works3

■ Transferring data to the GOT

Writing data to the GOT	GT Designer3 Version1 Screen Design Manual (Fundamentals) 1/2, 2/2
Reading data from the GOT	
Verifying a editing project to a GOT project	

■ Others

Configuring the extended function and option function	GOT1000 Series User's Manual (Extended Functions, Option Functions) for GT Works3

■ GOT

Abbreviations and generic terms			Description
GOT1000 Series	GT1695	GT1695M-X	Abbreviation of GT1695M-XTBA, GT1695M-XTBD
	GT1685	GT1685M-S	Abbreviation of GT1685M-STBA, GT1685M-STBD
	GT1675	GT1675M-S	Abbreviation of GT1675M-STBA, GT1675M-STBD
		GT1675M-V	Abbreviation of GT1675M-VTBA, GT1675M-VTBD
		GT1675-VN	Abbreviation of GT1675-VNBA, GT1675-VNBD
	GT1672	GT1672-VN	Abbreviation of GT1672-VNBA, GT1672-VNBD
	GT1665	GT1665M-S	Abbreviation of GT1665M-STBA, GT1665M-STBD
		GT1665M-V	Abbreviation of GT1665M-VTBA, GT1665M-VTBD
	GT1662	GT1662-VN	Abbreviation of GT1662-VNBA, GT1662-VNBD
	GT1655	GT1655-V	Abbreviation of GT1655-VTBD
	GT16		Abbreviation of GT1695, GT1685, GT1675, GT1672, GT1665, GT1662, GT1655, GT16 Handy GOT
	GT1595	GT1595-X	Abbreviation of GT1595-XTBA, GT1595-XTBD
	GT1585	GT1585V-S	Abbreviation of GT1585V-STBA, GT1585V-STBD
		GT1585-S	Abbreviation of GT1585-STBA, GT1585-STBD
	GT157□	GT1575V-S	Abbreviation of GT1575V-STBA, GT1575V-STBD
		GT1575-S	Abbreviation of GT1575-STBA, GT1575-STBD
		GT1575-V	Abbreviation of GT1575-VTBA, GT1575-VTBD
		GT1575-VN	Abbreviation of GT1575-VNBA, GT1575-VNBD
		GT1572-VN	Abbreviation of GT1572-VNBA, GT1572-VNBD
	GT156□	GT1565-V	Abbreviation of GT1565-VTBA, GT1565-VTBD
		GT1562-VN	Abbreviation of GT1562-VNBA, GT1562-VNBD
	GT155□	GT1555-V	Abbreviation of GT1555-VTBD
		GT1555-Q	Abbreviation of GT1555-QTBD, GT1555-QSBD
		GT1550-Q	Abbreviation of GT1550-QLBD
	GT15		Abbreviation of GT1595, GT1585, GT157□, GT156□, GT155□
	GT145□	GT1455-Q	Abbreviation of GT1455-QTBDE, GT1455-QTBD
		GT1450-Q	Abbreviation of GT1450-QMBDE, GT1450-QMBD, GT1450-QLBDE, GT1450-QLBD
	GT14		Abbreviation of GT1455-Q, GT1450-Q
	GT1275	GT1275-V	Abbreviation of GT1275-VNBA, GT1275-VNBD
	GT1265	GT1265-V	Abbreviation of GT1265-VNBA, GT1265-VNBD
	GT12		Abbreviation of GT1275, GT1265
	GT115□	GT1155-Q	Abbreviation of GT1155-QTBDQ, GT1155-QSBDQ, GT1155-QTBDA, GT1155-QSBDA, GT1155-QTBD, GT1155-QSBD
		GT1150-Q	Abbreviation of GT1150-QLBDQ, GT1150-QLBDA, GT1150-QLBD
	GT11		Abbreviation of GT115□, GT11 Handy GOT,
	GT105□	GT1055-Q	Abbreviation of GT1055-QSBD
		GT1050-Q	Abbreviation of GT1050-QBBD
	GT104□	GT1045-Q	Abbreviation of GT1045-QSBD
		GT1040-Q	Abbreviation of GT1040-QBBD
	GT1030		Abbreviation of GT1030-LBD, GT1030-LBD2, GT1030-LBL, GT1030-LBDW, GT1030-LBDW2, GT1030-LBLW, GT1030-LWD, GT1030-LWD2, GT1030-LWL, GT1030-LWDW, GT1030-LWDW2, GT1030-LWLW, GT1030-HBD, GT1030-HBD2, GT1030-HBL, GT1030-HBDW, GT1030-HBDW2, GT1030-HBLW, GT1030-HWD, GT1030-HWD2, GT1030-HWL, GT1030-HWDW, GT1030-HWDW2, GT1030-HWLW
	GT1020		Abbreviation of GT1020-LBD, GT1020-LBD2, GT1020-LBL, GT1020-LBDW, GT1020-LBDW2, GT1020-LBLW, GT1020-LWD, GT1020LWD2, GT1020-LWL, GT1020-LWDW, GT1020-LWDW2, GT1020-LWLW
	GT10		Abbreviation of GT105□, GT104□, GT1030, GT1020

Abbreviations and generic terms				Description
GOT1000 Series	Handy GOT	GT16 Handy GOT	GT1665HS-V	Abbreviation of GT1665HS-VTBD
		GT11 Handy GOT	GT1155HS-Q	Abbreviation of GT1155HS-QSBD
			GT1150HS-Q	Abbreviation of GT1150HS-QLBD
	GT SoftGOT1000			Abbreviation of GT SoftGOT1000
GOT900 Series				Abbreviation of GOT-A900 series, GOT-F900 series
GOT800 Series				Abbreviation of GOT-800 series

■ Communication unit

Abbreviations and generic terms	Description
Bus connection unit	GT15-QBUS, GT15-QBUS2, GT15-ABUS, GT15-ABUS2, GT15-75QBUSL, GT15-75QBUS2L, GT15-75ABUSL, GT15-75ABUS2L
Serial communication unit	GT15-RS2-9P, GT15-RS4-9S, GT15-RS4-TE
RS-422 conversion unit	GT15-RS2T4-9P, GT15-RS2T4-25P
Ethernet communication unit	GT15-J71E71-100
MELSECNET/H communication unit	GT15-J71LP23-25, GT15-J71BR13
MELSECNET/10 communication unit	GT15-75J71LP23-Z[*1], GT15-75J71BR13-Z[*2]
CC-Link IE Controller Network communication unit	GT15-J71GP23-SX
CC-Link IE Field Network communication unit	GT15-J71GF13-T2
CC-Link communication unit	GT15-J61BT13, GT15-75J61BT13-Z[*3]
Interface converter unit	GT15-75IF900
Serial multi-drop connection unit	GT01-RS4-M
Connection Conversion Adapter	GT10-9PT5S
RS-232/485 signal conversion adapter	GT14-RS2T4-9P

*1 A9GT-QJ71LP23 + GT15-75IF900 set
*2 A9GT-QJ71BR13 + GT15-75IF900 set
*3 A8GT-J61BT13 + GT15-75IF900 set

■ Option unit

Abbreviations and generic terms		Description
Printer unit		GT15-PRN
Video/RGB unit	Video input unit	GT16M-V4, GT15V-75V4
	RGB input unit	GT16M-R2, GT15V-75R1
	Video/RGB input unit	GT16M-V4R1, GT15V-75V4R1
	RGB output unit	GT16M-ROUT, GT15V-75ROUT
Multimedia unit		GT16M-MMR
CF card unit		GT15-CFCD
CF card extension unit[*1]		GT15-CFEX-C08SET
External I/O unit		GT15-DIO, GT15-DIOR
Sound output unit		GT15-SOUT

*1 GT15-CFEX + GT15-CFEXIF + GT15-C08CF set.

■ Option

Abbreviations and generic terms		Description	
Memory card	CF card	GT05-MEM-16MC, GT05-MEM-32MC, GT05-MEM-64MC, GT05-MEM-128MC, GT05-MEM-256MC, GT05-MEM-512MC, GT05-MEM-1GC, GT05-MEM-2GC, GT05-MEM-4GC, GT05-MEM-8GC, GT05-MEM-16GC	
	SD card	NZ1MEM-2GBSD, NZ1MEM-4GBSD, NZ1MEM-8GBSD, NZ1MEM-16GBSD, L1MEM-2GBSD, L1MEM-4GBSD	
Memory card adaptor		GT05-MEM-ADPC	
Option function board		GT16-MESB, GT15-FNB, GT15-QFNB, GT15-QFNB16M, GT15-QFNB32M, GT15-QFNB48M, GT11-50FNB, GT15-MESB48M	
Battery		GT15-BAT, GT11-50BAT	
Protective Sheet		For GT16	GT16-90PSCB, GT16-90PSGB, GT16-90PSCW, GT16-90PSGW, GT16-80PSCB, GT16-80PSGB, GT16-80PSCW, GT16-80PSGW, GT16-70PSCB, GT16-70PSGB, GT16-70PSCW, GT16-70PSGW, GT16-60PSCB, GT16-60PSGB, GT16-60PSCW, GT16-60PSGW, GT16-50PSCB, GT16-50PSGB, GT16-50PSCW, GT16-50PSGW, GT16-90PSCB-012, GT16-80PSCB-012, GT16-70PSCB-012, GT16-60PSCB-012, GT16-50PSCB-012, GT16H-60PSC
		For GT15	GT15-90PSCB, GT15-90PSGB, GT15-90PSCW, GT15-90PSGW, GT15-80PSCB, GT15-80PSGB, GT15-80PSCW, GT15-80PSGW, GT15-70PSCB, GT15-70PSGB, GT15-70PSCW, GT15-70PSGW, GT15-60PSCB, GT15-60PSGB, GT15-60PSCW, GT15-60PSGW, GT15-50PSCB, GT15-50PSGB, GT15-50PSCW, GT15-50PSGW
		For GT14	GT14-50PSCB, GT14-50PSGB, GT14-50PSCW, GT14-50PSGW
		For GT12	GT11-70PSCB, GT11-65PSCB
		For GT11	GT11-50PSCB, GT11-50PSGB, GT11-50PSCW, GT11-50PSGW, GT11H-50PSC
		For GT10	GT10-50PSCB, GT10-50PSGB, GT10-50PSCW, GT10-50PSGW, GT10-40PSCB, GT10-40PSGB, GT10-40PSCW, GT10-40PSGW, GT10-30PSCB, GT10-30PSGB, GT10-30PSCW, GT10-30PSGW, GT10-20PSCB, GT10-20PSGB, GT10-20PSCW, GT10-20PSGW
Protective cover for oil		GT05-90PCO, GT05-80PCO, GT05-70PCO, GT05-60PCO, GT05-50PCO, GT16-50PCO, GT10-40PCO, GT10-30PCO, GT10-20PCO	
USB environmental protection cover		GT16-UCOV, GT16-50UCOV, GT15-UCOV, GT14-50UCOV, GT11-50UCOV	
Stand		GT15-90STAND, GT15-80STAND, GT15-70STAND, A9GT-50STAND, GT05-50STAND	
Attachment		GT15-70ATT-98, GT15-70ATT-87, GT15-60ATT-97, GT15-60ATT-96, GT15-60ATT-87, GT15-60ATT-77, GT15-50ATT-95W, GT15-50ATT-85	
Backlight		GT16-90XLTT, GT16-80SLTT, GT16-70SLTT, GT16-70VLTT, GT16-70VLTTA, GT16-70VLTN, GT16-60SLTT, GT16-60VLTT, GT16-60VLTN, GT15-90XLTT, GT15-80SLTT, GT15-70SLTT, GT15-70VLTT, GT15-70VLTN, GT15-60VLTT, GT15-60VLTN	
Multi-color display board		GT15-XHNB, GT15-VHNB	
Connector conversion box		GT11H-CNB-37S, GT16H-CNB-42S, GT16H-CNB-37S	
Emergency stop sw guard cover		GT11H-50ESCOV, GT16H-60ESCOV	
With wall-mounting Attachment		GT14H-50ATT	
Memory loader		GT10-LDR	
Memory board		GT10-50FMB	
Panel-mounted USB port extension		GT14-C10EXUSB-4S, GT10-C10EXUSB-5S	

■ Software

Abbreviations and generic terms		Description
GT Works3		Abbreviation of the SW□DNC-GTWK3-E and SW□DNC-GTWK3-EA
GT Designer3		Abbreviation of screen drawing software GT Designer3 for GOT1000 series
GT Simulator3		Abbreviation of screen simulator GT Simulator3 for GOT1000/GOT900 series
GT SoftGOT1000		Abbreviation of monitoring software GT SoftGOT1000
GT Converter2		Abbreviation of data conversion software GT Converter2 for GOT1000/GOT900 series
GT Designer2 Classic		Abbreviation of screen drawing software GT Designer2 Classic for GOT900 series
GT Designer2		Abbreviation of screen drawing software GT Designer2 for GOT1000/GOT900 series
iQ Works		Abbreviation of iQ Platform compatible engineering environment MELSOFT iQ Works
MELSOFT Navigator		Generic term for integrated development environment software included in the SW□DNC-IQWK (iQ Platform compatible engineering environment MELSOFT iQ Works)
GX Works2		Abbreviation of SW□DNC-GXW2-E and SW□DNC-GXW2-EA type programmable controller engineering software
Controller simulator	GX Simulator3	Abbreviation of GX Works3 with the simulation function
	GX Simulator2	Abbreviation of GX Works2 with the simulation function
	GX Simulator	Abbreviation of SW D5C-LLT-E(-EV) type ladder logic test tool function software packages (SW5D5C-LLT(-EV) or later versions)
GX Developer		Abbreviation of SW□D5C-GPPW-E(-EV)/SW D5F-GPPW-E type software package
GX LogViewer		Abbreviation of SW□DNN-VIEWER-E type software package
PX Developer		Abbreviation of SW□D5C-FBDQ-E type FBD software package for process control
MT Works2		Abbreviation of motion controller engineering environment MELSOFT MT Works2 (SW□DNC-MTW2-E)
MT Developer		Abbreviation of SW□RNC-GSV type integrated start-up support software for motion controller Q series
MR Configurator2		Abbreviation of SW□DNC-MRC2-E type Servo Configuration Software
MR Configurator		Abbreviation of MRZJW□-SETUP□E type Servo Configuration Software
FR Configurator		Abbreviation of Inverter Setup Software (FR-SW□-SETUP-WE)
NC Configurator		Abbreviation of CNC parameter setting support tool NC Configurator
FX Configurator-FP		Abbreviation of parameter setting, monitoring, and testing software packages for FX3U-20SSC-H (SW□D5C-FXSSC-E)
FX3U-ENET-L Configuration tool		Abbreviation of FX3U-ENET-L type Ethernet module setting software (SW1D5-FXENETL-E)
RT ToolBox2		Abbreviation of robot program creation software (3D-11C-WINE)
MX Component		Abbreviation of MX Component Version□ (SW□D5C-ACT-E, SW□D5C-ACT-EA)
MX Sheet		Abbreviation of MX Sheet Version□ (SW□D5C-SHEET-E, SW□D5C-SHEET-EA)
CPU Module Logging Configuration Tool		Abbreviation of CPU Module Logging Configuration Tool (SW1DNN-LLUTL-E)

■ License key (for GT SoftGOT1000)

Abbreviations and generic terms	Description
License	GT15-SGTKEY-U, GT15-SGTKEY-P

■ Others

Abbreviations and generic terms	Description
IAI	Abbreviation of IAI Corporation
AZBIL	Abbreviation of Azbil Corporation (former Yamatake Corporation)
OMRON	Abbreviation of OMRON Corporation
KEYENCE	Abbreviation of KEYENCE CORPORATION
KOYO EI	Abbreviation of KOYO ELECTRONICS INDUSTRIES CO., LTD.
SHARP	Abbreviation of Sharp Manufacturing Systems Corporation
JTEKT	Abbreviation of JTEKT Corporation
SHINKO	Abbreviation of Shinko Technos Co., Ltd.
CHINO	Abbreviation of CHINO CORPORATION
TOSHIBA	Abbreviation of TOSHIBA CORPORATION
TOSHIBA MACHINE	Abbreviation of TOSHIBA MACHINE CO., LTD.
HITACHI IES	Abbreviation of Hitachi Industrial Equipment Systems Co., Ltd.
HITACHI	Abbreviation of Hitachi, Ltd.
FUJI FA	Abbreviation of Fuji Electric FA Components & Systems Co., Ltd.
PANASONIC	Abbreviation of Panasonic Corporation
FUJI SYS	Abbreviation of Fuji Electric Systems Co., Ltd.
YASKAWA	Abbreviation of YASKAWA Electric Corporation
YOKOGAWA	Abbreviation of Yokogawa Electric Corporation
ALLEN-BRADLEY	Abbreviation of Allen-Bradley products manufactured by Rockwell Automation, Inc.
GE FANUC	Abbreviation of GE Fanuc Automation Corporation GE Fanuc Automation Corporation
LS IS	Abbreviation of LS Industrial Systems Co., Ltd.
SCHNEIDER	Abbreviation of Schneider Electric SA
SICK	Abbreviation of SICK AG
SIEMENS	Abbreviation of Siemens AG
RKC	Abbreviation of RKC INSTRUMENT INC.
HIRATA	Abbreviation of Hirata Corporation
MURATEC	Abbreviation of Muratec products manufactured by Muratec Automation Co., Ltd.
PLC	Abbreviation of programmable controller
Temperature controller	Generic term for temperature controller manufactured by each corporation
Indicating controller	Generic term for indicating controller manufactured by each corporation
Control equipment	Generic term for control equipment manufactured by each corporation
CHINO controller	Abbreviation of indicating controller manufactured by CHINO CORPORATION
PC CPU module	Abbreviation of PC CPU Unit manufactured by CONTEC CO., LTD
GOT (server)	Abbreviation of GOTs that use the server function
GOT (client)	Abbreviation of GOTs that use the client function
Windows® font	Abbreviation of TrueType font and OpenType font available for Windows® (Differs from the True Type fonts settable with GT Designer3)
Intelligent function module	Indicates the modules other than the PLC CPU, power supply module and I/O module that are mounted to the base unit
MODBUS® /RTU	Generic term for the protocol designed to use MODBUS® protocol messages on a serial communication
MODBUS® /TCP	Generic term for the protocol designed to use MODBUS® protocol messages on a TCP/IP network

■ Symbols

Following symbols are used in this manual.

Following GOT is shown.

GT14 Handy Shows GT14 Handy.

PLC			Connection cable	Connector conversion box	External cable	GOT model	Total distance	Number of connectable Model name equipment
Model name	RS-422 connector conversion Cable	Communication type	Cable model					
MELSEC-Q	-	RS-232	GT11-C30R2-6P(3m)	GT11H-CNB-37S	GT11H-C30-37P(3m) GT11H-C60-37P(6m) GT11H-C100-37P(10m)	GT14 Handy	6m	1 GOT for 1 computer link module
	FA-CNV2402CBL(0.2m) FA-CNV2405CBL(0.5m)	RS-422	GT01-C30R4-25P(3m) GT01-C100R4-25P(10m)			GT14 Handy	13m	

5.3 GOT Side Settings

5.3.1 Setting communicationinterface (Communication settings)

Set the channel of the connected equipment.

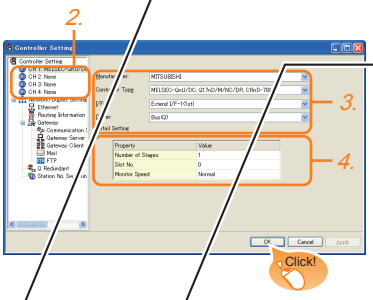

1. Select [Common] → [Controller Setting] from the menu.

2. The Controller Setting window is displayed. Select the channel to be used from the list menu.

3. Set the following items.
   - Manufacturer: Mitsubishi
   - Controller Type: Set the option according to the Controller Type to be connected.
   - I/F: Interface to be used
   - Driver: Set either of the following option according to the Controller Type to be connected.
     - BUS (Q)
     - BUS (A/QnA)

4. The detailed setting is displayed after Manufacturer, Controller Type, I/F, and Driver are set.
   Make the settings according to the usage environment.
   ☞ 5.3.2 Communication detail settings

Click the OK button when settings are completed.

5.3.2 Communication detail settings

(1) Bus (Q)

Property	Value
Number of Stages	1
Slot No.	0
Monitor Speed	Normal

Item	Description	Range
Number of stages	(Default: 1)	1 to 7
Slot No.	(Default: 0)	0 to 9
Monitor speed	(Default: Normal)	High/Normal/Low

(2) Bus (A/QnA)

Property	Value
Number of Stages	1
Slot No.	0

Item	Description	Range
Number of stages	(Default: 1)	1 to 7
Slot No.	(Default: 0)	0 to 7

POINT

(1) Communication interface setting by Utility
The communication interface setting can be changed on the Utility's [Communication Settings] after writing [Communication Settings] of project data.
For details on the Utility, refer to the following manual.
☞ GT□ User's Manual

(2) Precedence in communication settings
When settings are made by GT Designer3 or the Utility, the latest setting is effective.

(3) When changing Stage No. and Slot No.
Change these settings with the PLC CPU turned OFF, and then reapply the power to the PLC CPU and GOT.
Failure to do so may generate a system alarm (No.487).

1. → *2.* → *3.* …
Indicates the operation steps.

[ ] : Indicates the setting items displayed on the software and GOT screen.

POINT Refers to the information required.

HINT Refers to information useful for operation.

Indicates the location of related content.

Since the above page was created for explanation purpose, it differs from the actual page.

■ About system configuration

The following describes the system configuration of each connection included in this manual.

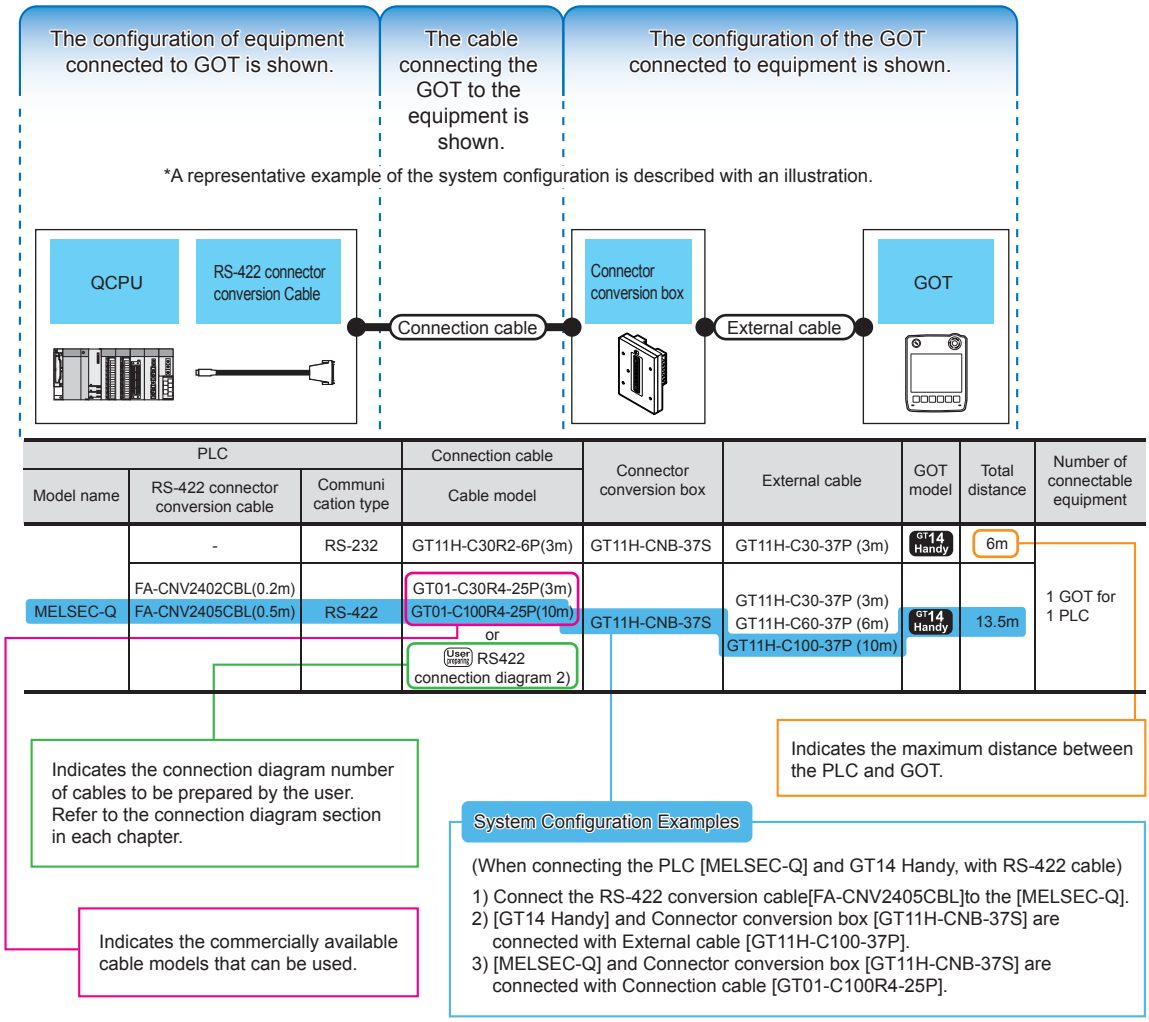

Since the above page was created for explanation purpose, it differs from the actual page.

CONNECTIONS TO NON-MITSUBISHI PRODUCTS

32. CONNECTION TO IAI ROBOT CONTROLLER . . . . . 32 - 1
33. CONNECTION TO OMRON PLC . . . . . 33 - 1
34. CONNECTION TO OMRON TEMPERATURE CONTROLLER . . 34 - 1
35. CONNECTION TO KEYENCE PLC . . . . . 35 - 1
36. CONNECTION TO KOYO EI PLC . . . . . 36 - 1
37. CONNECTION TO JTEKT PLC . . . . . 37 - 1
38. CONNECTION TO SHARP PLC . . . . . 38 - 1
39. CONNECTION TO SHINKO TECHNOS INDICATING CONTROLLER . . 39 - 1
40. CONNECTION TO CHINO CONTROLLER . . . . . 40 - 1
41. CONNECTION TO TOSHIBA PLC . . . . . 41 - 1
42. CONNECTION TO TOSHIBA MACHINE PLC . . . . . 42 - 1
43. CONNECTION TO PANASONIC SERVO AMPLIFIER . . . 43 - 1
44. CONNECTION TO PANASONIC INDUSTRIAL DEVICES SUNX PLC . . 44 - 1
45. CONNECTION TO HITACHI IES PLC . . . . . 45 - 1
46. CONNECTION TO HITACHI PLC . . . . . 46 - 1
47. CONNECTION TO FUJI PLC . . . . . 47 - 1
48. CONNECTION TO FUJI TEMPERATURE CONTROLLER . . 48 - 1
49. CONNECTION TO YASKAWA PLC . . . . . 49 - 1
50. CONNECTION TO YOKOGAWA PLC . . . . . 50 - 1
51. CONNECTION TO YOKOGAWA TEMPERATURE CONTROLLER . . 51 - 1
52. CONNECTION TO AZBIL CONTROL EQUIPMENT . . . . . 52 - 1
53. CONNECTION TO RKC TEMPERATURE CONTROLLER . . 53 - 1
54. CONNECTION TO ALLEN-BRADLEY PLC . . . . . 54 - 1
55. CONNECTION TO GE PLC . . . . . 55 - 1
56. CONNECTION TO LS INDUSTRIAL SYSTEMS PLC . . . . 56 - 1
57. CONNECTION TO SICK SAFETY CONTROLLER . . . . . 57 - 1
58. CONNECTION TO SIEMENS PLC . . . . . 58 - 1
59. CONNECTION TO HIRATA CORPORATION HNC CONTROLLER . . . 59 - 1
60. CONNECTION TO MURATEC CONTROLLER . . . . . 60 - 1

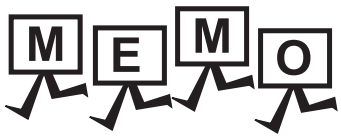
MEMO

32. CONNECTION TO IAI ROBOT CONTROLLER

32.1 Connectable Model List

The following table shows the connectable models.

Series name	Model	Clock	Communication type	GT14 Handy	Refer to
X-SEL	XSEL-J	×	RS-232	○	32.2.1
	XSEL-K				
	XSEL-KE				
	XSEL-KT				
	XSEL-KET				
	XSEL-P				
	XSEL-Q				
	XSEL-JX				
	XSEL-KX				
	XSEL-KTX				
	XSEL-PX				
	XSEL-QX				
SSEL	SSEL				
ASEL	ASEL				
PSEL	PSEL				
PCON	PCON-C	×	RS-232	○	32.2.2
	PCON-CG				
	PCON-CF				
	PCON-CY				
	PCON-SE				
	PCON-PL				
	PCON-PO				
	PCON-CA				
ACON	ACON-C				
	ACON-CG				
	ACON-CY				
	ACON-SE				
	ACON-PL				
	ACON-PO				
SCON	SCON-C				
	SCON-CA				
ERC2	ERC2				

32.2 System Configuration

32.2.1 Connecting to X-SEL, SSEL, ASEL, PSEL

Communication driver

IAI X-SEL

(1) When using the connector conversion box

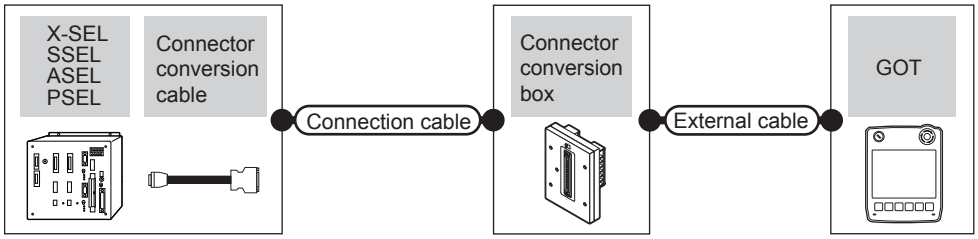

PLC			Connection cable	Connector conversion box	External cable	GOT model	Total distance	Number of connectable equipment
Series name	Connector conversion cable*1	Communication type	Cable model Connection diagram number					
X-SEL (Teaching connector)	-	RS-232	CB-ST-E1MW050*1 or User preparing RS232 connection diagram 1)	GT11H-CNB-37S	GT11H-C30-37P(3m)	GT14 Handy	6m	1 GOT for 1 Controller
X-SEL (General RS232C port connector)	-	RS-232	User preparing RS232 connection diagram 4)			GT14 Handy	6m	
SSEL ASEL PSEL	CB-SEL-SJ002	RS-232	CB-ST-E1MW050*1			GT14 Handy	6m	

*1 Product manufactured by IAI Corporation. For details of the product, contact IAI Corporation.

(2) When using the external cable (GT11H-C□□□-37P)

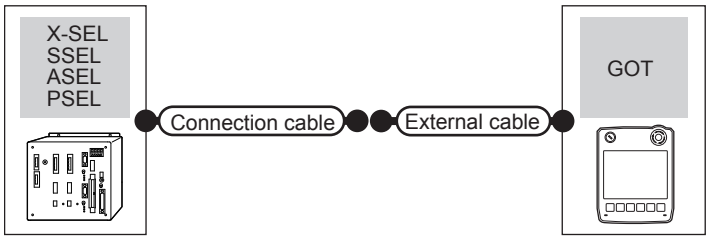

PLC		Connection cable	External cable	GOT model	Total distance	Number of connectable equipment
Series name	Communication type	Cable model Connection diagram number				
X-SEL (Teaching connector)	RS-232	User preparing RS232 connection diagram 2)	GT11H-C30-37P(3m)	GT14 Handy	6m	1 GOT for 1 Controller
X-SEL (General RS232C port connector)	RS-232	User preparing RS232 connection diagram 2)	GT11H-C30-37P(3m)	GT14 Handy	6m	

*1 Product manufactured by IAI Corporation. For details of the product, contact IAI Corporation.

(3) When using the external cable (GT11H-C□□□)

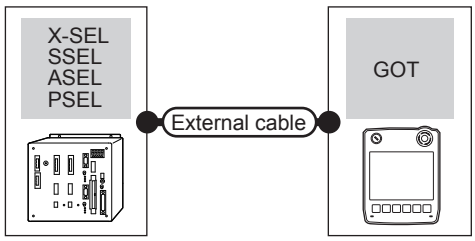

PLC		External cable	GOT model	Total distance	Number of connectable equipment
Series name	Communication type				
X-SEL (Teaching connector)	RS-232	GT11H-C60(3m) (User preparing) RS232 connection diagram 3)	GT14 Handy	6m	1 GOT for 1 Controller
X-SEL (General RS232C port connector)	RS-232	GT11H-C60(3m) (User preparing) RS232 connection diagram 3)	GT14 Handy	6m	

*1 Product manufactured by IAI Corporation. For details of the product, contact IAI Corporation.

32.2.2 Connecting to PCON, ACON, SCON, ERC2

Communication driver
IAI ROBO CYLINDER

■ When connecting to one controller (RS-232)

(1) PCON, ACON, SCON, ERC2 (SIO specifications), and ERC2 (NP/PN specifications)

(a) When using the connector conversion box

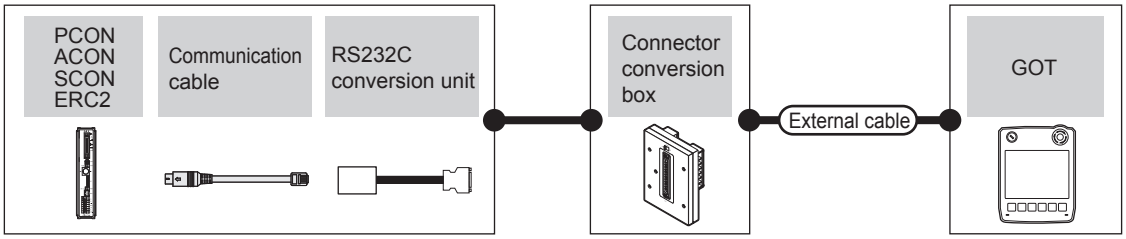

Controller Series name	External device communication cable	RS232 conversion adapter	Connector conversion box	External cable	GOT model	Total distance	Number of connectable equipment
PCON ACON SCON ERC2 (NP/PN specifications)*3	CB-RCA-SIO050(5m)*1	RCB-CV-MW(0.3m)*1	GT11H-CNB-37S	GT11H-C30-37P(3m)	GT14 Handy	6m	1 GOT for 1 Controller
ERC2 (SIO specifications)*2	CB-ERC2-SIO020*1 + CB-ERC2-PWBIO□□□*1 or CB-ERC2-PWBIO□□□-RB*1	RCB-CV-MW(0.3m)*1			GT14 Handy	6m	

*1 Product manufactured by IAI Corporation. For details of the product, contact IAI Corporation.
*2 Use ERC2-□-□-□-□-□-SE-□-□.
*3 Use the following models.
ERC2-□-□-□-□-□-NP-□-□, ERC2-□-□-□-□-□-PN-□-□

(b) When using the external cable (GT11H-C□□□-37P)

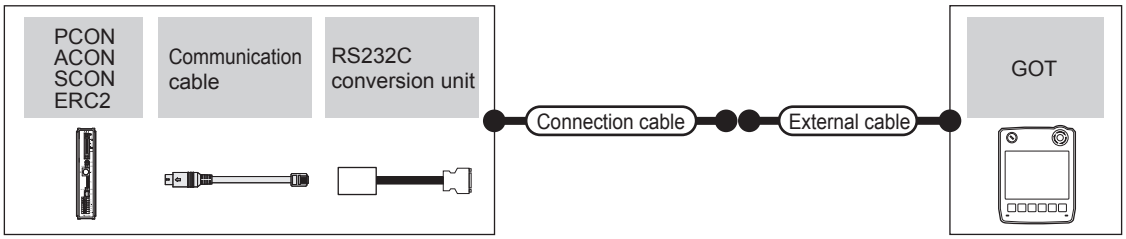

Controller Series name	External device communication cable	RS232 conversion adapter	Connection cable Cable model Connection diagram number	External cable	GOT model	Total distance	Number of connectable equipment
PCON ACON SCON ERC2 (NP/PN specifications)*3	CB-RCA-SIO050(5m)*1	RCB-CV-MW(0.3m)*1	User preparing RS232 connection diagram 10)	GT11H-C30-37P(3m)	GT14 Handy	6m	1 GOT for 1 Controller
ERC2 (SIO specifications)*2	CB-ERC2-SIO020*1 + CB-ERC2-PWBIO□□□*1 or CB-ERC2-PWBIO□□□-RB*1	RCB-CV-MW(0.3m)*1	User preparing RS232 connection diagram 10)	GT11H-C30-37P(3m)	GT14 Handy	6m	

*1 Product manufactured by IAI Corporation. For details of the product, contact IAI Corporation.
*2 Use ERC2-□-□-□-□-□-SE-□-□.
*3 Use the following models.
ERC2-□-□-□-□-□-NP-□-□, ERC2-□-□-□-□-□-PN-□-□

(c) When using the external cable (GT11H-C□□□)

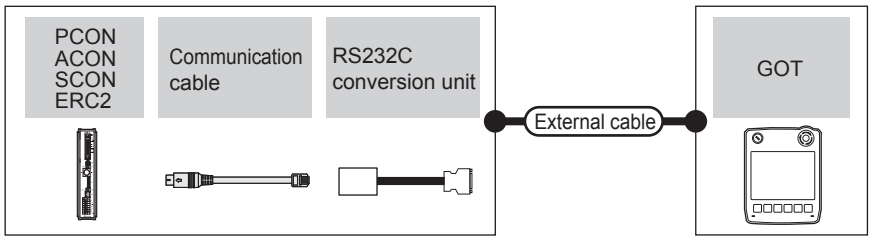

Controller Series name	External device communication cable	RS232 conversion adapter	External cable	GOT model	Total distance	Number of connectable equipment
PCON ACON SCON ERC2 (NP/PN specifications)*3	CB-RCA-SIO050(5m)*1	RCB-CV-MW(0.3m)*1	GT11H-C30(3m) GT11H-C60(6m) User preparing RS232 connection diagram 11)	GT14 Handy	6m	1 GOT for 1 Controller
ERC2 (SIO specifications)*2	CB-ERC2-SIO020*1 + CB-ERC2-PWBIO□□□*1 or CB-ERC2-PWBIO□□□-RB*1	RCB-CV-MW(0.3m)*1	GT11H-C30(3m) GT11H-C60(6m) User preparing RS232 connection diagram 11)	GT14 Handy	6m	

*1 Product manufactured by IAI Corporation. For details of the product, contact IAI Corporation.
*2 Use ERC2-□-□-□-□-□-SE-□-□.
*3 Use the following models.
ERC2-□-□-□-□-□-NP-□-□, ERC2-□-□-□-□-□-PN-□-□

(2) ERC2 (NP/PN specifications) only

(a) When using the connector conversion box

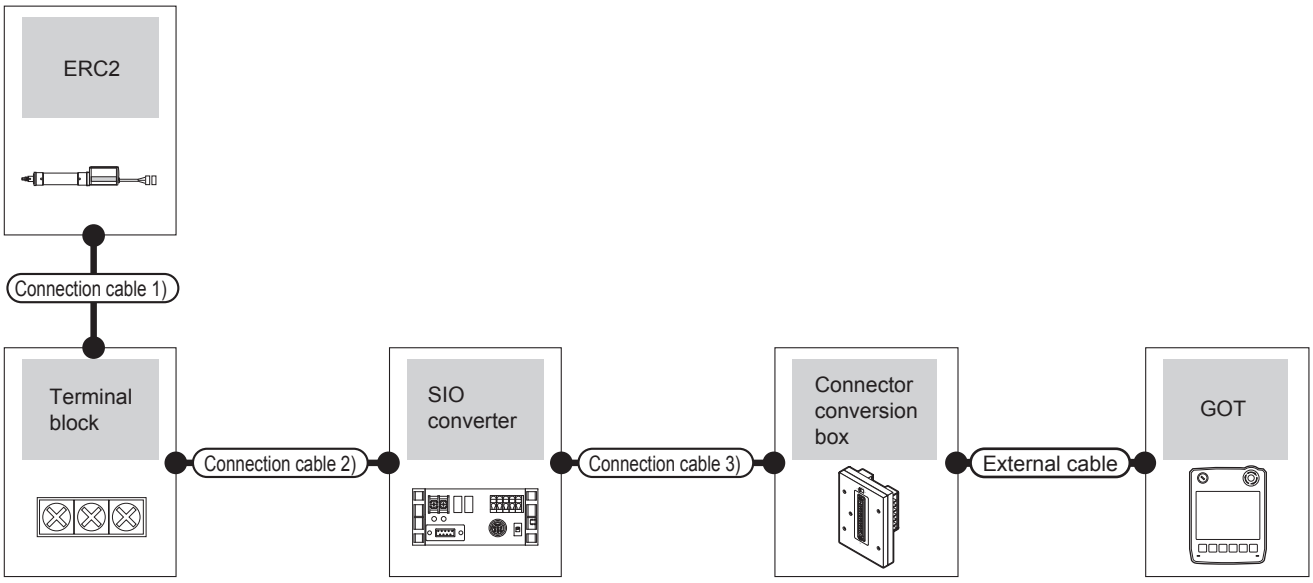

Controller		Connection cable 1)*1	Terminal block	Connection cable 2)	Max. distance	SIO controller*1		Connection cable 3)	Connector conversion box	External cable	GOT model	Total distance	Number of connectable equipment
Series	Communication type	Cable model		Connection diagram number		Model	Communication type	Cable model Connection diagram number					
ERC2 (NP/PN specifications) *2	RS-422	CB-ERC-PWBIO□□□ or CB-ERC-PWBIO□□□-RB	Terminal block (created by users)	User preparing RS422/485 connection diagram 4) or User preparing RS422/485 connection diagram 5)	100m	RCB-TU-SIO-□	RS-232	RCB-CV-MW*1(0.3m) + CB-RCA-SIO050*1 (5m) or User preparing RS232 connection diagram 7)	GT11H-CNB-37S	GT11H-C30-37P(3m)	GT14 Handy	6m	1 GOT for 1 Controller
			RC□TU-PIO*1	User preparing RS422/485 connection diagram 6)									

*1 Product manufactured by IAI Corporation. For details of the product, contact IAI Corporation.

*2 Use the following models.
ERC2-□-□-□-□-□-NP-□-□, ERC2-□-□-□-□-□-PN-□-□

(b) When using the external cable (GT11H-C□□□-37P)

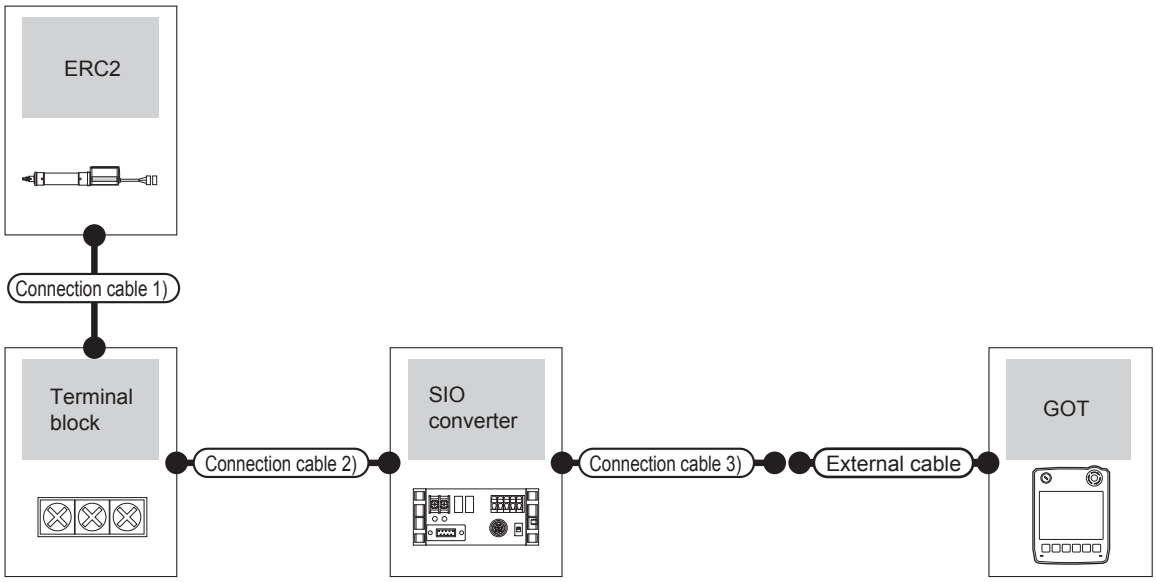

Controller		Connection cable 1)*1	Terminal block	Connection cable 2)	Max. distance	SIO controller*1		Connection cable 3)	External cable	GOT model	Total distance	Number of connectable equipment
Series	Communication type	Cable model		Connection diagram number		Model	Communication type	Cable model Connection diagram number				
ERC2 (NP/PN specifications) *2	RS-422	CB-ERC-PWBIO□□□ or CB-ERC-PWBIO□□□-RB	Terminal block (created by users)	User preparing RS422/485 connection diagram 4) or User preparing RS422/485 connection diagram 5)	100m	RCB-TU-SIO-□	RS-232	User preparing RS232 connection diagram 8)	GT11H-C30-37P(3m)	GT14 Handy	6m	1 GOT for 1 Controller
			RC□-TU-PIO*1	User preparing RS422/485 connection diagram 6)					GT11H-C30-37P(3m)			

*1 Product manufactured by IAI Corporation. For details of the product, contact IAI Corporation.

*2 Use the following models.
ERC2-□-□-□-□-□-NP-□-□, ERC2-□-□-□-□-□-PN-□-□

(c) When using the external cable (GT11H-C□□□)

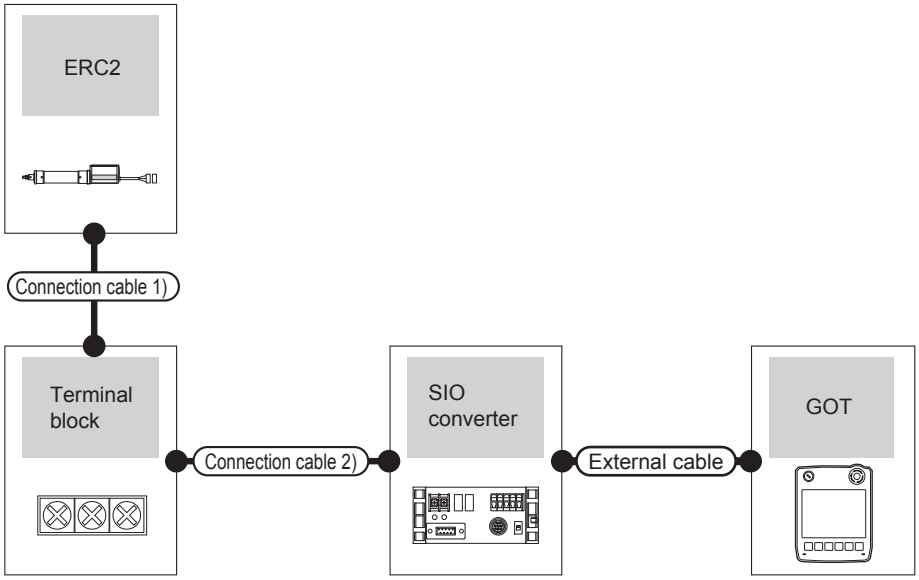

Controller		Connection cable 1)*1	Terminal block	Connection cable 2)	Max. distance	SIO controller*1		External cable	GOT model	Total distance	Number of connectable equipment
Series	Communication type	Cable model		Connection diagram number		Model	Communication type				
ERC2 (NP/PN specifications) *2	RS-422	CB-ERC-PWBIO□□□ or CB-ERC-PWBIO□□□-RB	Terminal block (created by users)	User preparing RS422/485 connection diagram 4) or User preparing RS422/485 connection diagram 5)	100m	RCB-TU-SIO-□	RS-232	GT11H-C30(3m) GT11H-C60(6m) User preparing RS232 connection diagram 9)	GT14 Handy	6m	1 GOT for 1 Controller
			RC□-TU-PIO*1	User preparing RS422/485 connection diagram 6)				GT11H-C30(3m) GT11H-C60(6m) User preparing RS232 connection diagram 9)			

*1 Product manufactured by IAI Corporation. For details of the product, contact IAI Corporation.

*2 Use the following models.
ERC2-□-□-□-□-□-NP-□-□, ERC2-□-□-□-□-□-PN-□-□

■ When connecting to multiple controllers (via an SIO converter)

(3) PCON, ACON, SCON, ERC2 (SIO specifications), and ERC2 (NP/PN specifications)

(a) When using the connector conversion box

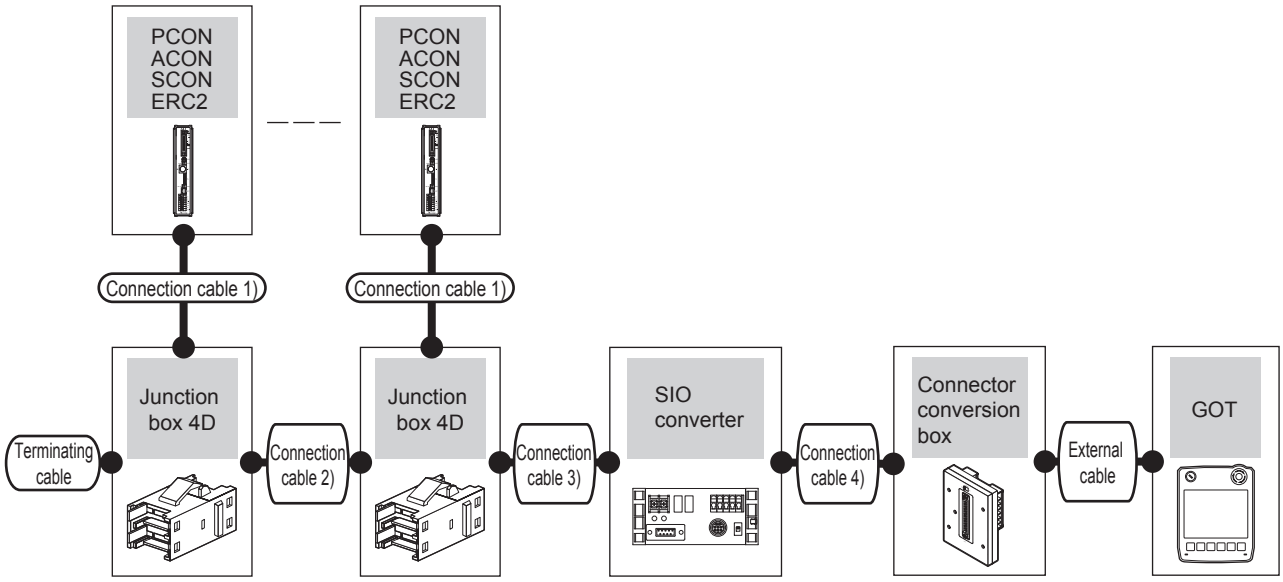

Controller	Terminal cable	Connection cable 1)	Four-way junction	Connection cable 2)	Connection cable 3)	Max. distance *4	SIO controller*1		Connection cable 4)	Connector conversion box	External cable	GOT model	Total distance *5	Number of connectable equipment
Series	Connection diagram number	Cable model	Model	Connection diagram number	Connection diagram number		Model	Communication type	Cable model Connection diagram number					
PCON ACON SCON	User preparing RS422 connection diagram 1)	CB-RCB-CTL002 (0.2m) *1	5-1473574-4*2	User preparing RS422 connection diagram 2)	User preparing RS422 connection diagram 2) or User preparing RS422 connection diagram 3)	100m	RCB-TU-SIO-□	RS-232	RCB-CV-MW (0.3m)*1 + CB-RCA-SIO050 (5m)*1 or User preparing RS232 connection diagram 7)	GT11H-CNB-37S	GT11H-C30-37P(3m)	GT14 Handy	6m	1 GOT for 16 controllers
PCON ACON SCON	-	CB-RCB-CTL002 (0.2m) *1*3	-	-	-	100m	RCB-TU-SIO-□	RS-232	RCB-CV-MW (0.3m)*1 + CB-RCA-SIO050 (5m)*1 or User preparing RS232 connection diagram 7)			GT14 Handy	6m	1 GOT for 2 controllers
ERC2 (SIO specifications) *6	User preparing RS422 connection diagram 1)	CB-ERC2-CTL001*1 + CB-ERC2-PWBIO □□□*1 or CB-ERC2-PWBIO □□□-RB*1	5-1473574-4*2	User preparing RS422 connection diagram 2)	User preparing RS422 connection diagram 2) or User preparing RS422 connection diagram 3)	100m	RCB-TU-SIO-□	RS-232	RCB-CV-MW (0.3m)*1 + CB-RCA-SIO050 (5m)*1 or User preparing RS232 connection diagram 7)			GT14 Handy	6m	1 GOT for 16 controllers

Controller	Terminal cable	Connection cable 1)	Four-way junction	Connection cable 2)	Connection cable 3)	Max. distance *4	SIO controller*1		Connection cable 4)	Connector conversion box	External cable	GOT model	Total distance *5	Number of connectable equipment
Series	Connection diagram number	Cable model	Model	Connection diagram number	Connection diagram number		Model	Communication type	Cable model Connection diagram number					
ERC2 (SIO specifications) *6	-	CB-ERC2-CTL001*1 + CB-ERC2-PWBIO □□□*1 or CB-ERC2-PWBIO □□□-RB*1	-	-	-	100m	RCB-TU-SIO-□	RS-232	RCB-CV-MW (0.3m)*1 + CB-RCA-SIO050 (5m)*1 or User preparing RS232 connection diagram 7)	GT11H-CNB-37S	GT11H-C30-37P(3m)	GT14 Handy	6m	1 GOT for 2 controllers
ERC2 (NP/PN specifications) *7	User preparing RS422 connection diagram 1)	CB-ERC-PWBIO □□□ or CB-ERC-PWBIO □□□-RB + Terminal block (created by users) + User preparing RS422/485 connection diagram 7)	5-1473574-4*2	User preparing RS422 connection diagram 2)	User preparing RS422 connection diagram 2) or User preparing RS422 connection diagram 3)	100m	RCB-TU-SIO-□	RS-232	RCB-CV-MW (0.3m)*1 + CB-RCA-SIO050 (5m)*1 or User preparing RS232 connection diagram 7)			GT14 Handy	6m	1 GOT for 16 controllers

*1 Product manufactured by IAI Corporation. For details of the product, contact IAI Corporation.
*2 Product manufactured by Tyco Electronics. For details of the product, contact Tyco Electronics.
*3 Connect the controller to the SIO converter directly with the CB-RCB-CTL002 cable.
*4 The distance from the controller to the SIO converter
*5 The distance from the SIO converter to the GT14 Handy
*6 Use ERC2-□-□-□-□-□-□-SE-□-□.
*7 Use the following models.
ERC2-□-□-□-□-□-NP-□-□, ERC2-□-□-□-□-□-PN-□-□

(b) When using the external cable (GT11H-C□□□-37P)

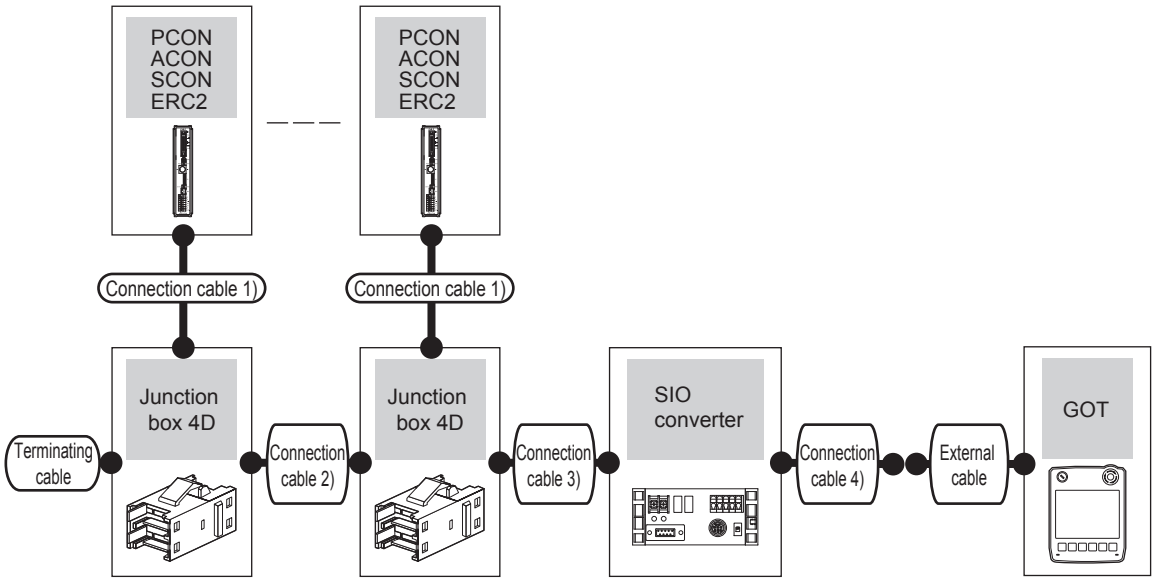

Controller	Terminal cable	Connection cable 1)	Four-way junction	Connection cable 2)	Connection cable 3)	Max. distance *4	SIO controller*1		Connection cable 4)	External cable	GOT model	Total distance *5	Number of connectable equipment
Series	Connection diagram number	Cable model	Model	Connection diagram number	Connection diagram number		Model	Communication type	Cable model Connection diagram number				
PCON ACON SCON	User preparing RS422 connection diagram 1)	CB-RCB-CTL002 (0.2m)*1	5-1473574-4*2	User preparing RS422 connection diagram 2)	User preparing RS422 connection diagram 2) or User preparing RS422 connection diagram 3)	100m	RCB-TU-SIO-□	RS-232	User preparing RS232 connection diagram 10)	GT11H-C30-37P(3m)	GT14 Handy	6m	1 GOT for 16 controllers
PCON ACON SCON	-	CB-RCB-CTL002 (0.2m)*1*3	-	-	-	100m	RCB-TU-SIO-□	RS-232	User preparing RS232 connection diagram 10)	GT11H-C30-37P(3m)	GT14 Handy	6m	1 GOT for 2 controllers
ERC2 (SIO specifications) *6	User preparing RS422 connection diagram 1)	CB-ERC2-CTL001*1 + CB-ERC2-PWBIO □□□*1 or CB-ERC2-PWBIO □□□-RB*1	5-1473574-4*2	User preparing RS422 connection diagram 2)	User preparing RS422 connection diagram 2) or User preparing RS422 connection diagram 3)	100m	RCB-TU-SIO-□	RS-232	User preparing RS232 connection diagram 10)	GT11H-C30-37P(3m)	GT14 Handy	6m	1 GOT for 16 controllers
ERC2 (SIO specifications) *6	-	CB-ERC2-CTL001*1 + CB-ERC2-PWBIO □□□*1 or CB-ERC2-PWBIO □□□-RB*1	-	-	-	100m	RCB-TU-SIO-□	RS-232	User preparing RS232 connection diagram 10)	GT11H-C30-37P(3m)	GT14 Handy	6m	1 GOT for 2 controllers

Controller	Terminal cable	Connection cable 1)	Four-way junction	Connection cable 2)	Connection cable 3)	Max. distance *4	SIO controller*1		Connection cable 4)	External cable	GOT model	Total distance *5	Number of connectable equipment
Series	Connection diagram number	Cable model	Model	Connection diagram number	Connection diagram number		Model	Communication type	Cable model Connection diagram number				
ERC2 (NP/PN specifications) *7	User preparing RS422 connection diagram 1)	CB-ERC-PWBIO □□□ or CB-ERC-PWBIO □□□-RB + Terminal block (created by users) + User preparing RS422/485 connection diagram 7)	5-1473574-4*2	User preparing RS422 connection diagram 2)	User preparing RS422 connection diagram 2) or User preparing RS422 connection diagram 3)	100m	RCB-TU-SIO-□	RS-232	User preparing RS232 connection diagram 10)	GT11H-C30-37P(3m)	GT14 Handy	6m	1 GOT for 16 controllers

*1 Product manufactured by IAI Corporation. For details of the product, contact IAI Corporation.
*2 Product manufactured by Tyco Electronics. For details of the product, contact Tyco Electronics.
*3 Connect the controller to the SIO converter directly with the CB-RCB-CTL002 cable.
*4 The distance from the controller to the SIO converter
*5 The distance from the SIO converter to the GT14 Handy
*6 Use ERC2-□-□-□-□-□-SE-□-□.
*7 Use the following models.
ERC2-□-□-□-□-□-NP-□-□, ERC2-□-□-□-□-□-PN-□-□

(c) When using the external cable (GT11H-C□□□)

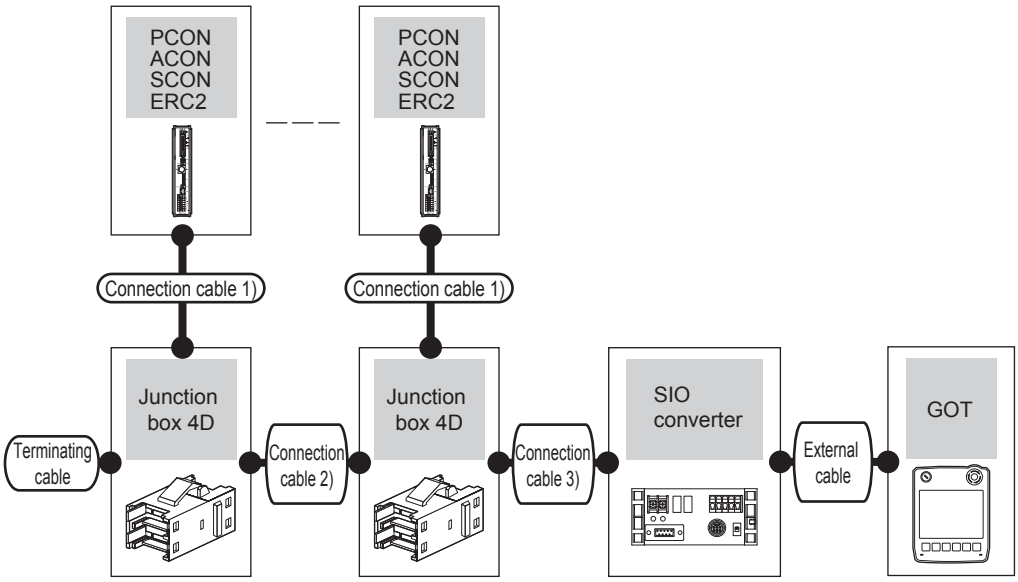

Controller	Terminal cable	Connection cable 1)	Four-way junction	Connection cable 2)	Connection cable 3)	Max. distance *4	SIO controller*1		External cable	GOT model	Total distance *5	Number of connectable equipment
Series	Connection diagram number	Cable model	Model	Connection diagram number	Connection diagram number		Model	Communication type				
PCON ACON SCON	User preparing RS422 connection diagram 1)	CB-RCB-CTL002 (0.2m)*1	5-1473574-4 *2	User preparing RS422 connection diagram 2)	User preparing RS422 connection diagram 2) or User preparing RS422 connection diagram 3)	100m	RCB-TU-SIO-□	RS-232	GT11H-C60(3m) User preparing RS232 connection diagram 11)	GT14 Handy	6m	1 GOT for 16 controllers
PCON ACON SCON	-	CB-RCB-CTL002 (0.2m)*1*3	-	-	-	100m	RCB-TU-SIO-□	RS-232	GT11H-C60(3m) User preparing RS232 connection diagram 11)	GT14 Handy	6m	1 GOT for 2 controllers
ERC2 (SIO specifications) *6	User preparing RS422 connection diagram 1)	CB-ERC2-CTL001*1 + CB-ERC2-PWBIO □□□*1 or CB-ERC2-PWBIO □□□-RB*1	5-1473574-4 *2	User preparing RS422 connection diagram 2)	User preparing RS422 connection diagram 2) or User preparing RS422 connection diagram 3)	100m	RCB-TU-SIO-□	RS-232	GT11H-C60(3m) User preparing RS232 connection diagram 11)	GT14 Handy	6m	1 GOT for 16 controllers
ERC2 (SIO specifications) *6	-	CB-ERC2-CTL001*1 + CB-ERC2-PWBIO □□□*1 or CB-ERC2-PWBIO □□□-RB*1	-	-	-	100m	RCB-TU-SIO-□	RS-232	GT11H-C60(3m) User preparing RS232 connection diagram 11)	GT14 Handy	6m	1 GOT for 2 controllers

Controller	Terminal cable	Connection cable 1)	Four-way junction	Connection cable 2)	Connection cable 3)	Max. distance *4	SIO controller*1		External cable	GOT model	Total distance *5	Number of connectable equipment
Series	Connection diagram number	Cable model	Model	Connection diagram number	Connection diagram number		Model	Communication type				
ERC2 (NP/PN specifications) *7	User preparing RS422 connection diagram 1)	CB-ERC-PWBIO □□□ or CB-ERC-PWBIO □□□-RB + Terminal block (created by users) + User preparing RS422/485 connection diagram 7)	5-1473574-4 *2	User preparing RS422 connection diagram 2)	User preparing RS422 connection diagram 2) or User preparing RS422 connection diagram 3)	100m	RCB-TU-SIO-□	RS-232	GT11H-C60(3m) User preparing RS232 connection diagram 11)	GT14 Handy	6m	1 GOT for 16 controllers

*1 Product manufactured by IAI Corporation. For details of the product, contact IAI Corporation.
*2 Product manufactured by Tyco Electronics. For details of the product, contact Tyco Electronics.
*3 Connect the controller to the SIO converter directly with the CB-RCB-CTL002 cable.
*4 The distance from the controller to the SIO converter
*5 The distance from the SIO converter to the GT14 Handy
*6 Use ERC2-□-□-□-□-□-SE-□-□.
*7 Use the following models.
ERC2-□-□-□-□-□-NP-□-□, ERC2-□-□-□-□-□-PN-□-□

(4) ERC2 (NP/PN specifications) only

(a) When using the connector conversion box

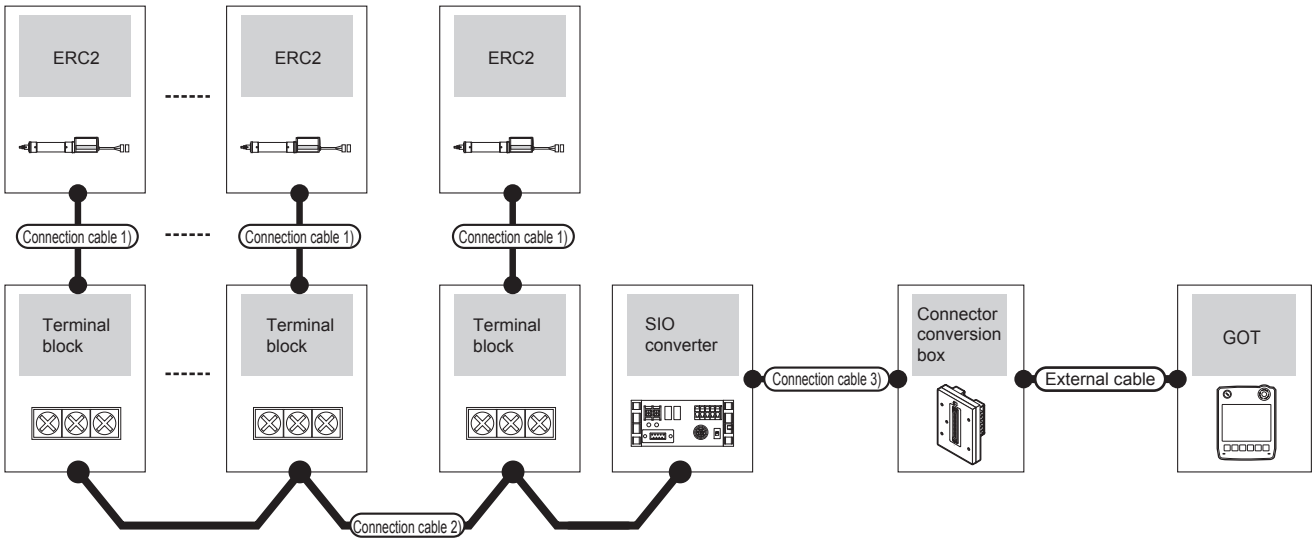

Controller		Connection cable 1)*1	Terminal block	Connection cable 2)	Max. distance	SIO controller*1		Connection cable 3)	Connector conversion box	External cable	GOT model	Total distance	Number of connectable equipment
Series	Communication type	Cable model		Connection diagram number		Model	Communication type	Cable model Connection diagram number					
ERC2 (NP/PN specifications) *2	RS-422	CB-ERC-PWBIO□□□ or CB-ERC-PWBIO□□□-RB	Terminal block (User made)	User preparing RS422/485 connection diagram 4) or User preparing RS422/485 connection diagram 5)	100m	RCB-TU-SIO-□	RS-232	RCB-CV-MW*1 (0.3m) + CB-RCA-SIO050*1 (5m) or User preparing RS232 connection diagram 7)	GT11H-CNB-37S	GT11H-C30-37P(3m)	GT14 Handy	6m	1 GOT for 1 Controller
			RC□-TU-PIO*1	User preparing RS422/485 connection diagram 6)									

*1 Product manufactured by IAI Corporation. For details of the product, contact IAI Corporation.

*2 Use the following models.
ERC2-□-□-□-□-□-NP-□-□, ERC2-□-□-□-□-□-PN-□-□

(b) When using the external cable (GT11H-C□□□-37P)

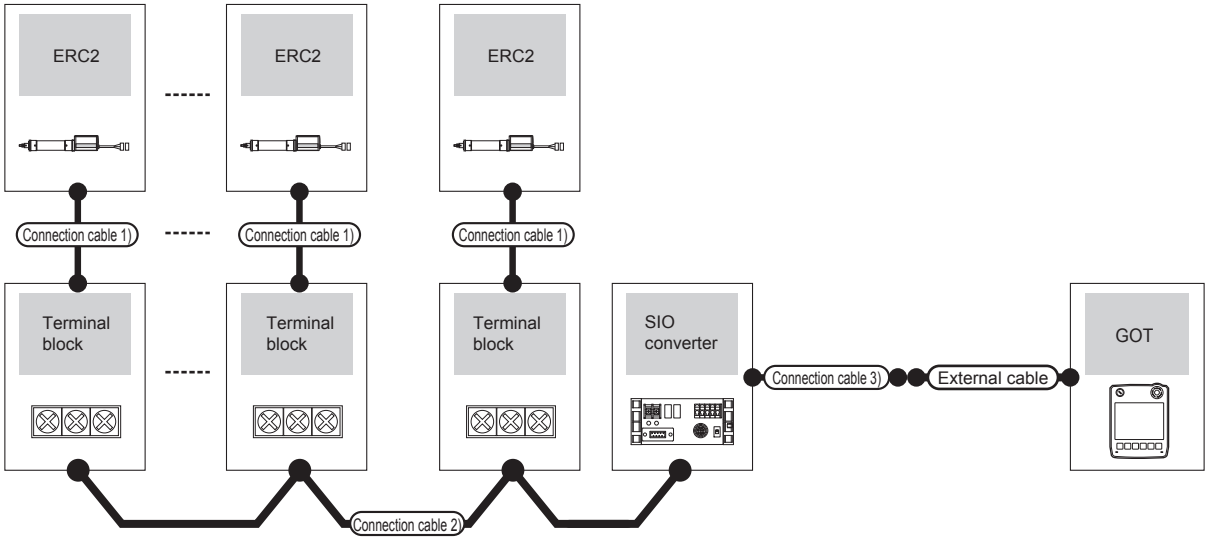

Controller		Connection cable 1)*1	Terminal block	Connection cable 2)	Max. distance	SIO controller*1		Connection cable 3)	External cable	GOT model	Total distance	Number of connectable equipment
Series	Communication type	Cable model		Connection diagram number		Model	Communication type	Cable model Connection diagram number				
ERC2 (NP/PN specifications) *2	RS-422	CB-ERC-PWBIO□□□ or CB-ERC-PWBIO□□□-RB	Terminal block (created by users)	User preparing RS422/485 connection diagram 4) or User preparing RS422/485 connection diagram 5)	100m	RCB-TU-SIO-□	RS-232	User preparing RS232 connection diagram 7)	GT11H-C30-37P(3m)	GT14 Handy	6m	1 GOT for 1 Controller
			RC□-TU-PIO*1	User preparing RS422/485 connection diagram 6)					GT11H-C30-37P(3m)			

*1 Product manufactured by IAI Corporation. For details of the product, contact IAI Corporation.

*2 Use the following models.
ERC2-□-□-□-□-□-NP-□-□, ERC2-□-□-□-□-□-PN-□-□

(c) When using the external cable (GT11H-C□□□)

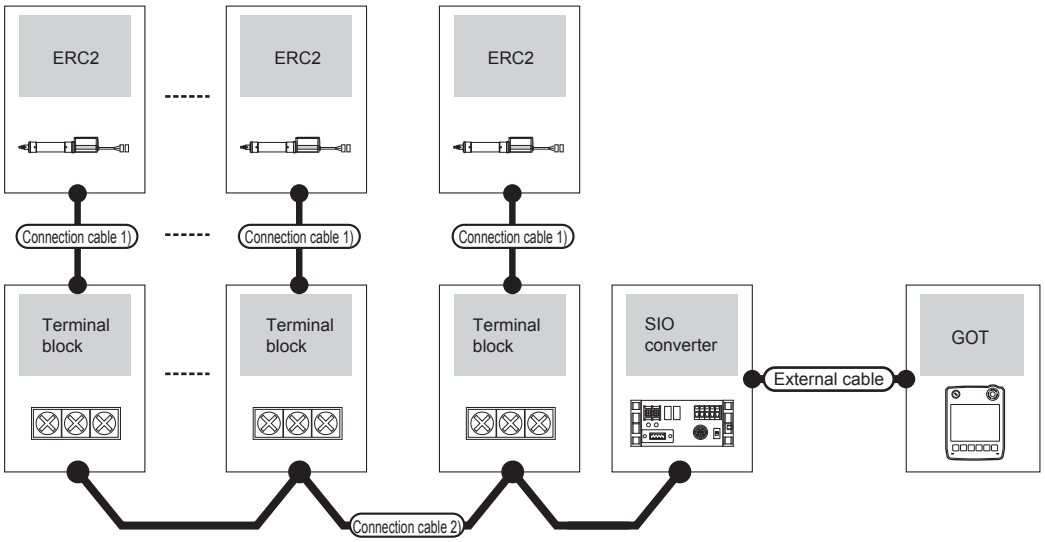

Controller		Connection cable 1)*1	Terminal block	Connection cable 2)	Max. distance	SIO controller*1		External cable	GOT model	Total distance	Number of connectable equipment
Series	Communication type	Cable model		Connection diagram number		Model	Communication type				
ERC2 (NP/PN specifications) *2	RS-422	CB-ERC-PWBIO□□□ or CB-ERC-PWBIO□□□-RB	Terminal block (created by users)	User preparing RS422/485 connection diagram 4) or User preparing RS422/485 connection diagram 5)	100m	RCB-TU-SIO-□	RS-232	GT11H-C30(3m) GT11H-C60(6m) User preparing RS232 connection diagram 7)	GT14 Handy	6m	1 GOT for 1 Controller
			RC□-TU-PIO*1	User preparing RS422/485 connection diagram 6)				GT11H-C30(3m) GT11H-C60(6m) User preparing RS232 connection diagram 7)			

*1 Product manufactured by IAI Corporation. For details of the product, contact IAI Corporation.

*2 Use the following models.
ERC2-□-□-□-□-□-NP-□-□, ERC2-□-□-□-□-□-PN-□-□

32.3 Connection Diagram

The following diagram shows the connection between the GOT and the PLC.

32.3.1 RS-232 cable

■ Connection diagram

RS232 connection diagram 1)

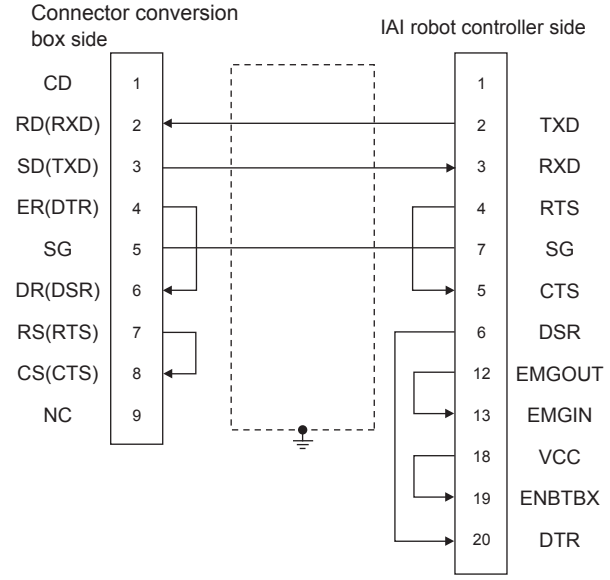

RS232 connection diagram 2)

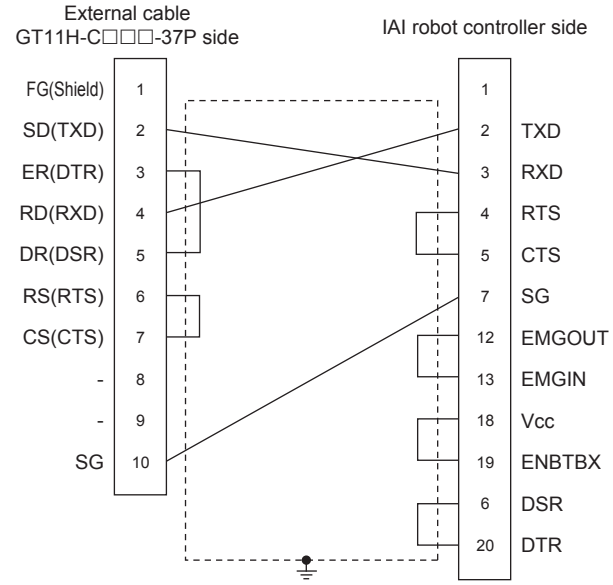

RS232 connection diagram 3)

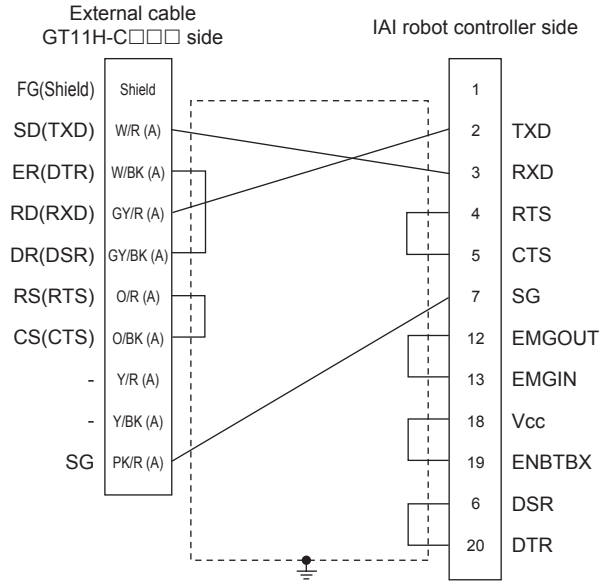

RS232 connection diagram 4)

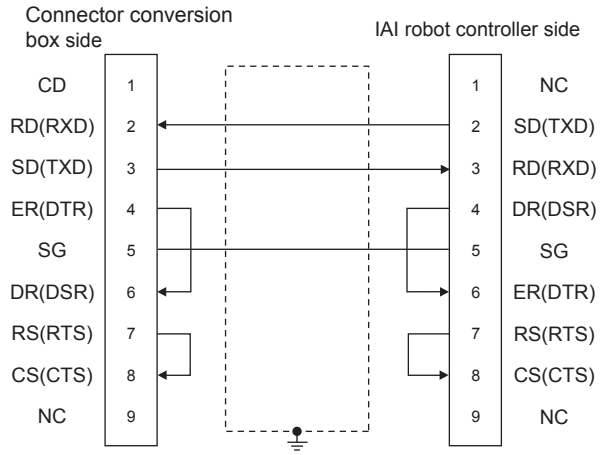

RS232 connection diagram 5)

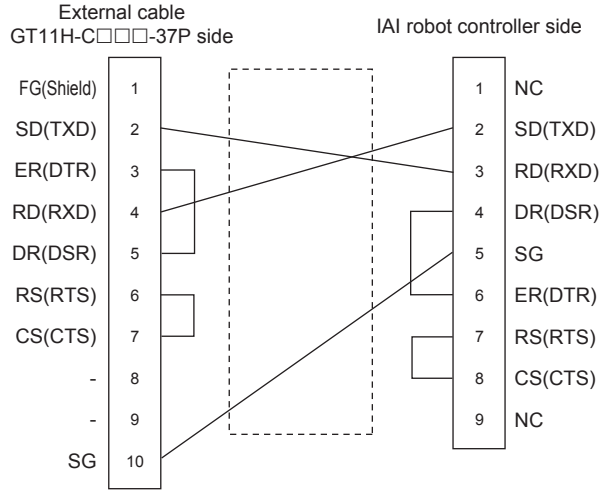

RS232 connection diagram 6)

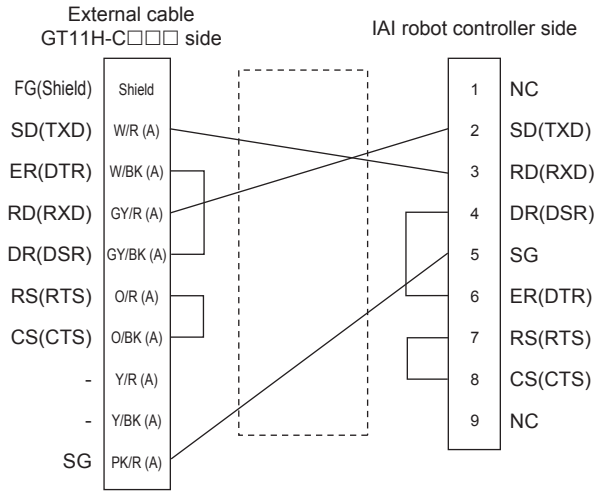

RS232 connection diagram 7)

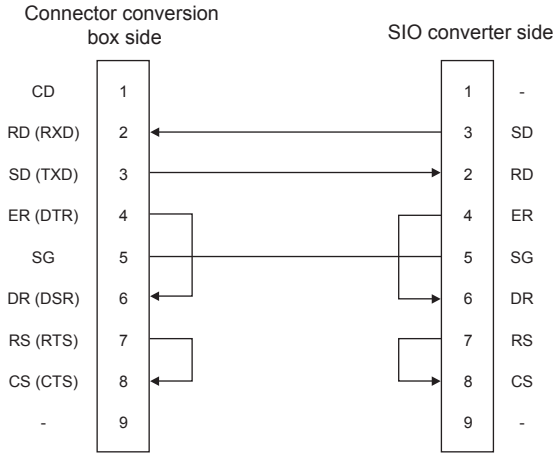

RS232 connection diagram 8)

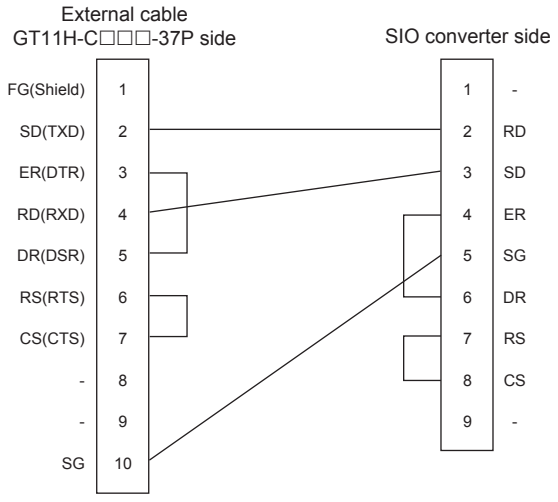

RS232 connection diagram 9)

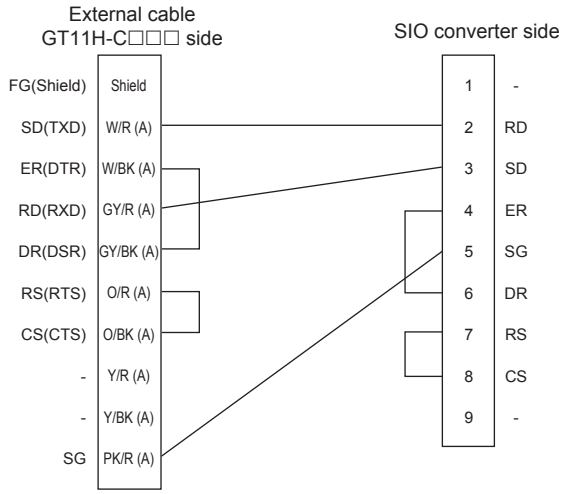

RS232 connection diagram 10)

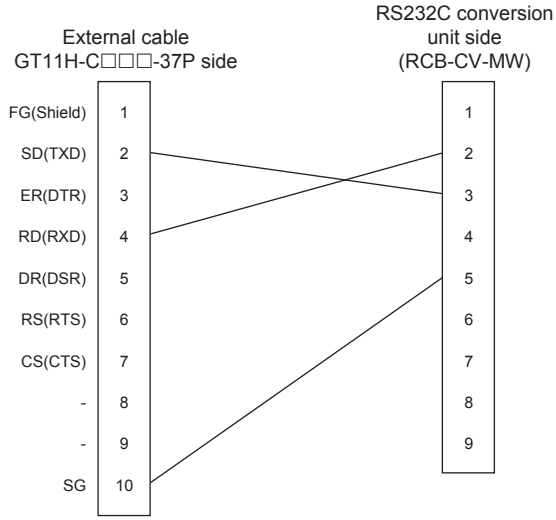

RS232 connection diagram 11)

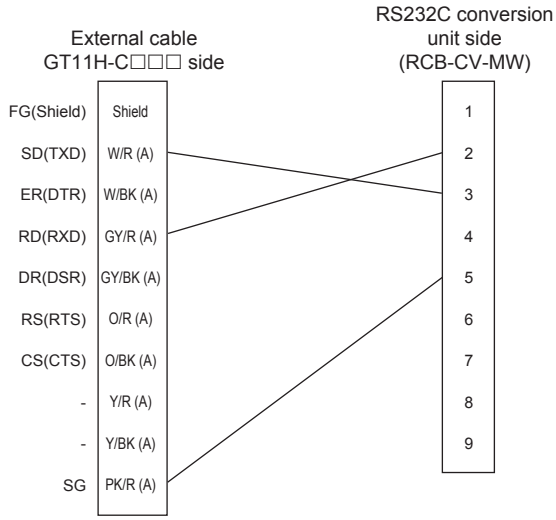

■ Precautions when preparing a cable

(1) Cable length
The length of the RS-232 cable must be 3m or less.

(2) Connector conversion box side connector
For the connector conversion box side connector, refer to the following.

☞ 6.6 Connector Conversion Box

(3) External cable side connector
For the connector specifications of the external cable side, refer to the following.

☞ 8.2 External Cable, Relay Cable

(4) IAI Robot Controller side connector
Use the connector compatible with the IAI Robot Controller.
For details, refer to the IAI Robot Controller user's manual.

32.3.2 RS-422 cable

■ Connection diagram

RS422 connection diagram 1)

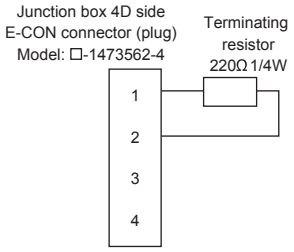

RS422 connection diagram 2)

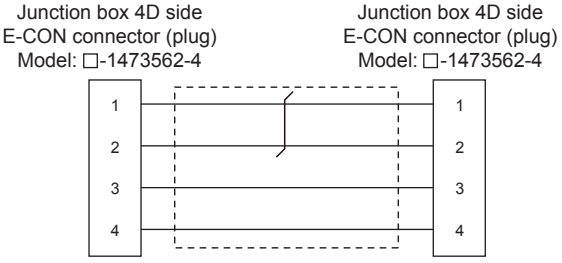

RS422 connection diagram 3)

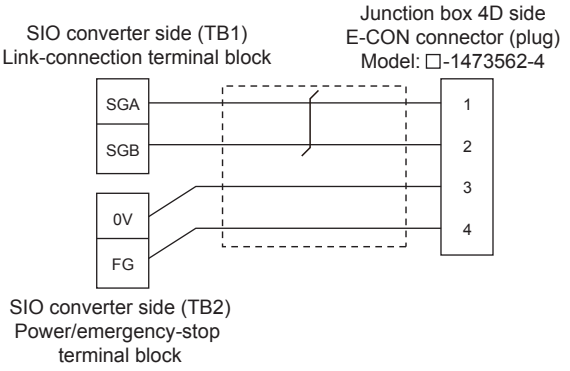

RS422/485 connection diagram 4)

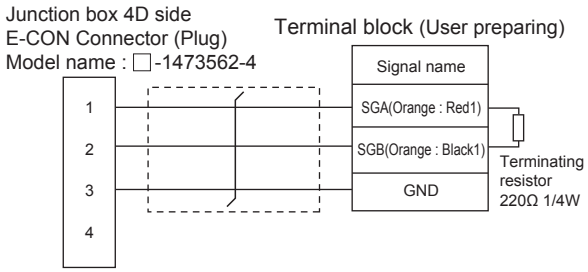

RS422/485 connection diagram 5)

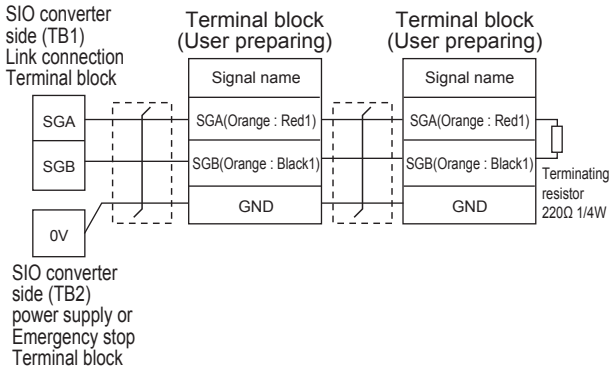

RS422/485 connection diagram 6)

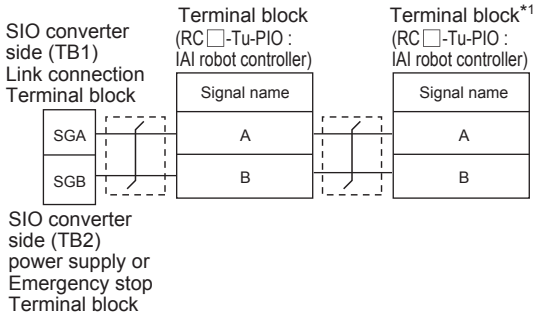

*1 Turn the terminator switch of a terminal block which will be a terminal to "RTON".

RS422/485 connection diagram 7)

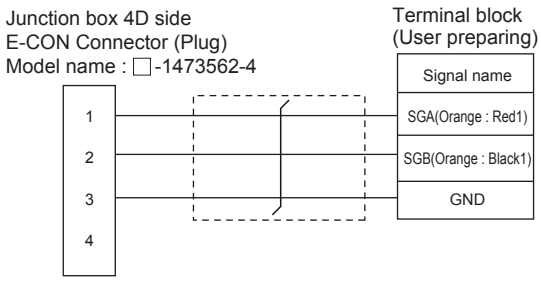

■ Precautions when preparing a cable

(1) Cable length

(a) When the communication route between the GOT and the robot controller does not go through the SIO converter
The distance from the robot controller to the Handy GOT converter must be 13m or less.

(b) When the communication route between the GOT and the robot controller goes through the SIO converter
The distance from the robot controller to the SIO converter must be 100m or less.

(2) Connector conversion box side connector
For the connector conversion box side connector, refer to the following.

☞ 6.6 Connector Conversion Box

(3) External cable side connector
For the connector specifications of the external cable side, refer to the following.

☞ 8.2 External Cable, Relay Cable

(4) IAI Robot Controller side connector
Use the connector compatible with the IAI Robot Controller.
For details, refer to the IAI Robot Controller user's manual.

32.4 GOT Side Settings

32.4.1 Setting communication interface (Communication settings)

Set the channel of the equipment connected to the GOT.

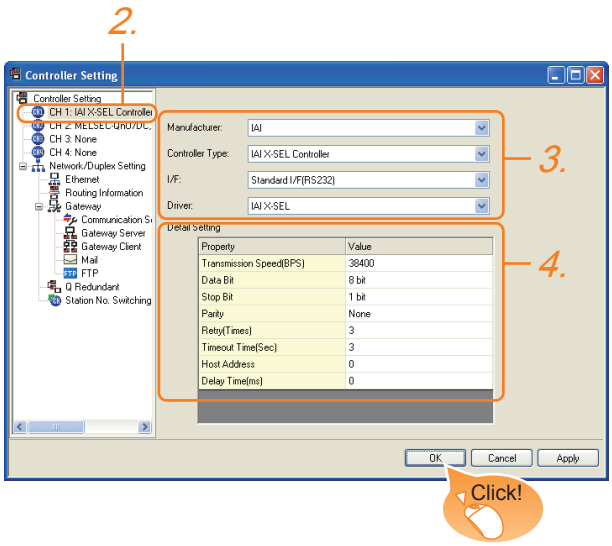

1. Select [Common] → [Controller Setting] from the menu.
2. The Controller Setting window is displayed. Select the channel to be used from the list menu.
3. Set the following items.
   - Manufacturer: IAI
   - Controller Type: Set either of the following.
     - IAI X-SEL Controller
     - IAI ROBO CYLINDER
   - Controller Type: IAI X-SEL Controller
   - I/F: Interface to be used
   - Driver: Set either of the following.
     - IAI X-SEL
     - IAI ROBO CYLINDER
4. The detailed setting is displayed after Manufacturer, Controller Type, I/F, and Driver are set.
   Make the settings according to the usage environment.
   32.4.2 Communication detail settings

Click the OK button when settings are completed.

POINT

The settings of connecting equipment can be confirmed in [I/F Communication Setting].
For details, refer to the following.
18.1.2 I/F communication setting

32.4.2 Communication detail settings

Make the settings according to the usage environment.

(1) IAI X-SEL Controller

Item	Description	Range
Transmission Speed	Set this item when change the transmission speed used for communication with the connected equipment. (Default: 38400bps)	9600bps, 19200bps, 38400bps, 57600bps, 115200bps
Data Bit	Set this item when change the data length used for communication with the connected equipment. (Default: 8bit)	7bit, 8bit
Stop Bit	Specify the stop bit length for communications. (Default: 1bit)	1bit, 2bit
Parity	Specify whether or not to perform a parity check, and how it is performed during communication. (Default: None)	None, Even, Odd
Retry	Set the number of retries to be performed when a communication error occurs. (Default: 3times)	0 to 5times
Timeout Time	Set the time period for a communication to time out. (Default: 3sec)	3 to 30sec
Host Address	Make the settings according to the station number (station code) of the controller to be monitored. (Default: 0)	0 to 255
Delay Time	Set this item to adjust the transmission timing of the communication request from the GOT. (Default: 0ms)	0 to 300ms

(2) IAI ROBO CYLINDER

Item	Description	Range
Transmission Speed	Set this item when change the transmission speed used for communication with the connected equipment. (Default: 38400bps)	9600bps, 19200bps, 38400bps, 57600bps, 115200bps
Data Bit	Set this item when change the data length used for communication with the connected equipment. (Default: 8bit)	7bit, 8bit
Stop Bit	Specify the stop bit length for communications. (Default: 1bit)	1bit, 2bit
Parity	Specify whether or not to perform a parity check, and how it is performed during communication. (Default: None)	None, Even, Odd
Retry	Set the number of retries to be performed when a communication error occurs. (Default: 3times)	0 to 5times
Timeout Time	Set the time period for a communication to time out. (Default: 3sec)	3 to 30sec
Host Address	Make the settings according to the station number (station code) of the controller to be monitored. (Default: 0)	0 to 15
Delay Time	Set this item to adjust the transmission timing of the communication request from the GOT. (Default: 0ms)	0 to 300ms

POINT

(1) Communication interface setting by Utility
The communication interface setting can be changed on the Utility's [Communication setting] after writing [Communication Settings] of project data.
For details on the Utility, refer to the following manual.

11. COMMUNICATION INTERFACE SETTING (COMMUNICATION SETTING)

(2) Precedence in communication settings
When settings are made by GT Designer3 or the Utility, the latest setting is effective.

32.5 Robot Controller Side Setting

POINT

IAI Robot Controller

For details of IAI Robot Controller, refer to the following manual.

IAI Robot Controller user's Manual

32.5.1 Connecting to X-SEL

Parameter setting

Enter the following parameters using peripheral software. When setting parameters, set the mode switch of the controller to "MANU".

Parameter	Parameter name	Set value*4
I/O parameter 90	Usage of SIO channel 1*1 opened to user	• When used in "MANU" Set either of the following. 0: SEL opened program 2: IAI protocol B • When used in "AUTO" 2: IAI protocol B
I/O parameter 91	Station code of SIO channel 1*1 opened to user	0 to 255 153*
I/O parameter 92*2	Baud rate type of SIO channel 1*1 opened to user	0: 9600bps* 1: 19200bps 2: 38400bps 3: 57600bps 5: 115200bps
I/O parameter 93	Data length of SIO channel 1*1 opened to user	7bit, 8bit*
I/O parameter 94	Stop bit length of SIO channel 1*1 opened to user	1bit*, 2bit
I/O parameter 95	Parity type of SIO channel 1*1 opened to user	0: None* 1: Odd 2: Even
I/O parameter 97*3	IAI-protocol minimum response delay for SIO channel 1*1 opened to user	0 to 999(ms)
Other parameter 46	Other setting bit pattern	bit0 to 3 = 1 (fixed)

*1 For X-SEL(P/Q/PX/QX), the parameter becomes the SIO channel 0 opened to user.

*2 Indicates only the transmission speeds that can be set on the GOT side.
Specify the transmission speed to match the transmission speed of the GOT.

*3 Set it only when a wait time is required before the response and transmission to the GOT request. Normally, the communication is available using default values.

*4 When using the "MANU" mode, the set value is fixed to the value with *. Adjust the settings of the GOT side to the * settings.
However, the communication setting of the PC software becomes the setting of X-SEL after the PC software for X-SEL is connected. In this case, adjust the communication setting of the GOT to the setting of the PC software.

Mode switch

(1) X-SEL K type

(a) When setting the mode switch to "MANU"
Connect the GOT to the following teaching connector.

(b) When setting the mode switch to "AUTO"
Connect the GOT to the following general RS232C port connector.

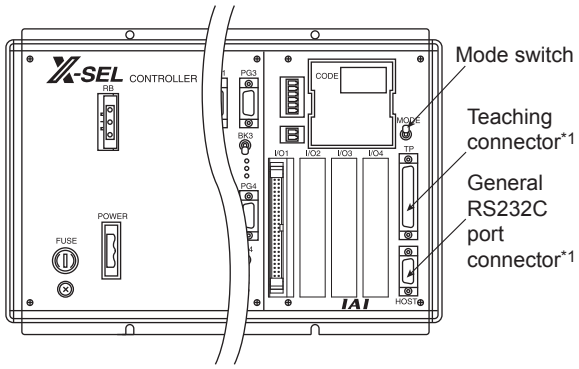

*1 The teaching connector and general RS232C port connector cannot be used at the same time.

(2) Other than X-SEL K type

Set the mode switch to "MANU" or "AUTO" and connect the GOT to the following teaching connector.

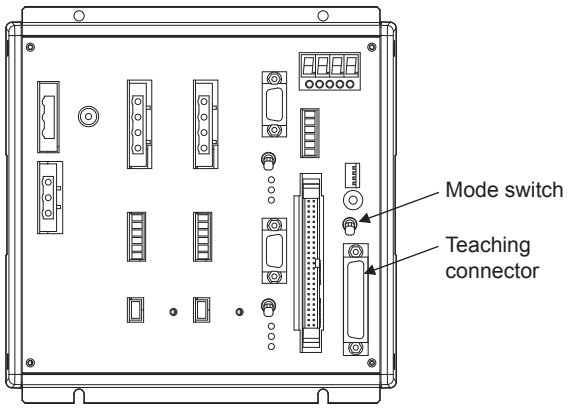

32.5.2 Connecting to SSEL, ASEL, PSEL

■ Parameter setting

Enter the following parameters using peripheral software. When setting parameters, set the mode switch of the controller to "MANU".

Parameter	Parameter name	Set value
I/O parameter 90	Usage of SIO channel 0 opened to user	2: IAI protocol B (fixed)
I/O parameter 91	Station code of SIO channel 0 opened to user	0 to 255
I/O parameter 92*1	Baud rate type of SIO channel 0 opened to user	0: 9600bps 1: 19200bps 2: 38400bps 3: 57600bps 5: 115200bps
I/O parameter 93	Data length of SIO channel 0 opened to user	7bit, 8bit
I/O parameter 94	Stop bit length of SIO channel 0 opened to user	1bit, 2bit
I/O parameter 95	Parity type of SIO channel 0 opened to user	0: None 1: Odd 2: Even
I/O parameter 97*2	IAI-protocol minimum response delay for SIO channel 0 opened to user	0 to 999(ms)
Other parameter 46	Other setting bit pattern	bit0 to 3 = 1 (fixed)

*1 Indicates only the transmission speeds that can be set on the GOT side.
Specify the transmission speed to match the transmission speed of the GOT.

*2 Set it only when a wait time is required before the response and transmission to the GOT request. Normally, the communication is available using default values.

■ Mode switch

Set the mode switch to "AUTO" and connect the GOT to the following teaching connector.

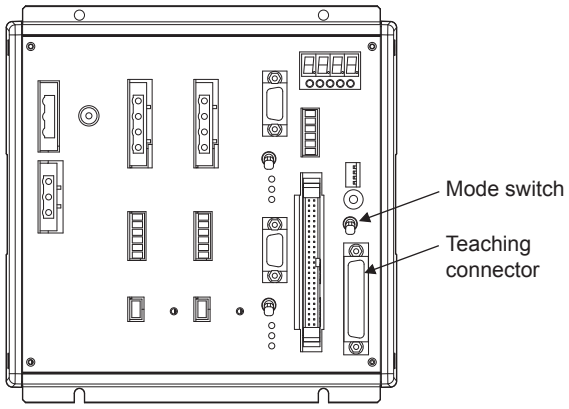

32.5.3 Connecting to PCON, ACON, SCON

■ Axis number setting and mode switching

For controllers without the following switches, set from the setting tool (PC software).

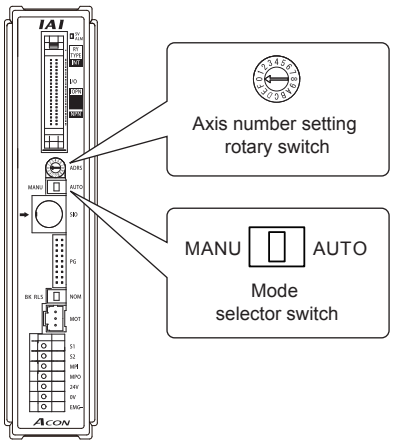

Switch	Set value
Axis number setting rotary switch	0 to 15
Mode selector switch	• Monitor only: AUTO • Monitor, data change: MANU

■ Transmission speed setting

Set the transmission speed from the setting tool (PC software).

Item	Setting range
SIO Communication speed*1	9600/19200/38400/57600/115200bps Default: 38400bps

*1 Indicates only the transmission speeds that can be set on the GOT side.
Specify the transmission speed to match the transmission speed of the GOT.

32.5.4 Connecting to ERC2

■ Axis number setting and mode switching

Set from the setting tool (PC software).

■ Transmission speed setting

Set the transmission speed from the setting tool (PC software).

Item	Setting range
SIO Communication speed*1	9600/19200/38400/57600/115200bps Default: 38400bps

*1 Indicates only the transmission speeds that can be set on the GOT side.
Specify the transmission speed to match the transmission speed of the GOT.

32.5.5 Station number setting

Set each station number so that no station number overlaps.
The station number can be set without regard to the cable connection order. There is no problem even if station numbers are not consecutive.

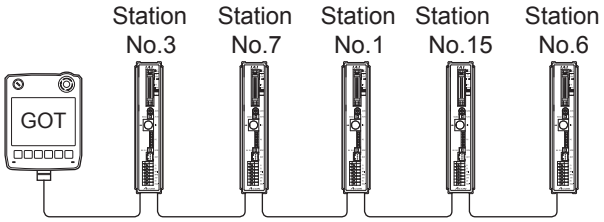

Examples of station number setting

(1) Direct specification

When setting the device, specify the station number of the robot controller of which data is to be changed.

Model	Specification range
PCON, ACON, SCON, ERC2	0 to 15

(2) Indirect specification

When setting the device, indirectly specify the station number of the robot controller of which data is to be changed using the 16-bit GOT internal data register (GD10 to GD25).
When specifying the station No. from 100 to 115 on GT Designer3, the value of GD10 to GD25 compatible to the station No. specification will be the station No. of the robot controller.

Specification station No.	Compatible device	Setting range
100	GD10	0 to 15 For the setting other than the above, an error (dedicated device is out of range) will occur.
101	GD11	
102	GD12	
103	GD13	
104	GD14	
105	GD15	
106	GD16	
107	GD17	
108	GD18	
109	GD19	
110	GD20	
111	GD21	
112	GD22	
113	GD23	
114	GD24	
115	GD25	

32.6 Device Range that Can Be Set

For details on the device range of controllers that can be used on GT14 Handy, refer to the following manuals.

☞ GT Designer3 Version1 Screen Design Manual (Fundamentals)

☞ GOT1000 Series Connection Manual (Non-Mitsubishi Products 1) for GT Works3

32.7 Precautions

■ Program control device

- When Program Execution Command (0), Program Exit Command (2), or Program Restart Command (4) is written to the program control device (PRG 0), it will be a request for all programs running in the controllers.
- When unsupported write data is input to the program control device, the following error is displayed in the system alarm.
  315: Device writing error.
  Correct device.

■ Variable devices

The variable number 99 of Integer device and variable number 199 of Real device are special devices used for operations by the X-SEL controller system. Do not use these variables for general purpose.

■ Command trigger compatible device

- For the device whose obtained data No.0 is a command trigger, communication with the controller is performed when the Write(1)/Read(2) is set to the command trigger.
  When the command trigger and setting value are written in a batch, the communication is performed based on the value set with batch write.
- When Clear(4) is set to the command trigger, the communication with the controller is not performed and the set value is initialized.
- When an unsupported set value is input to the command trigger, the following error is displayed in the system alarm.
  315: Device writing error.
  Correct device.

■ Device reserved for system use

Devices of "Reserved for system uses" are devices with indefinite values. Do not write to this device.

■ Write to the flash ROM

- The point data can be written to the flash ROM of the X-SEL controller. When the point data is written to the flash ROM, it is not cleared even when power supply to the controller is turned off. However, there are limits in the number of writing. For details, refer to the user's manual of X-SEL controller used.
- Never turn off the main power supply during the flash ROM write. Doing so may cause the loss of data and malfunction of controllers. For details, refer to the user's manual of X-SEL controller used.

■ Communication disconnection

- Writing to the flash ROM disconnects the communication with controllers until the writing is completed.
- Resetting software restarts the controllers. During this time, the communication with controllers is disconnected.

■ Connection of the IAI X-SEL K type

Note the following precaution when using the controller with the mode switch set to MANU.

- After powering up the X-SEL, connecting the GOT before the PC software causes the program startup disabled (A1D alarm) on the X-SEL side.

33. CONNECTION TO OMRON PLC

33.1 Connectable Model List

The following table shows the connectable models.

Series	Model	Clock	Communication type	GT14 Handy	Refer to
SYSMAC CPM	CPM1	×	RS-232	○	33.2.1
	CPM1A	×			
	CPM2A	○			
	CPM2C	○*3			
SYSMAC CQM1	CQM1*1	○*4	RS-232	○	33.2.1
SYSMAC CQM1H	CQM1H	○*4*5	RS-232 RS-422	○	33.2.2
SYSMAC CJ1	CJ1H	○	RS-232 RS-422	○	33.2.3
	CJ1G				
	CJ1M				
SYSMAC CJ2	CJ2H	○	RS-232 RS-422	○	33.2.3
	CJ2M				
SYSMAC CP1	CP1H	○	RS-232 RS-422	○	33.2.4
	CP1L				
	CP1E (N type)*8				
SYSMAC C200HS	C200HS	○	RS-232 RS-422	○	33.2.5
SYSMAC C200H	C200H	○*6			
SYSMAC α	C200HX	○	RS-232 RS-422	○	33.2.5
	C200HG				
	C200HE*2	○*7			
SYSMAC CS1	CS1H	○	RS-232 RS-422	○	33.2.6
	CS1G				
	CS1D				
SYSMAC C1000H	C1000H	×	RS-232 RS-422	○	33.2.7
SYSMAC C2000H	C2000H				
SYSMAC CVM1/CV	CV500	○	RS-232 RS-422	○	33.2.8
	CV1000				
	CV2000				
	CVM1	○*3			
SYSMAC CJ1	CJ1H	○	Ethernet	○*9	33.3.1
	CJ1G				
	CJ1M				
SYSMAC CJ2	CJ2H				
	CJ2M				
SYSMAC CS1	CS1H				
	CS1G				
	CS1D				

*1 The CQM1-CPU11 is unable to communicate with GOT since the CQM1-CPU11 has no RS-232C interface.
*2 The C200HE-CPU11 does not support communication board.
Use a host Link unit.
*3 Some models do not have a clock function.
*4 The memory cassette equipped with a clock is required.
*5 The EM device of the CQM-CPU61 cannot be monitored.
*6 To use the C200H-CPU21/CPU22/CPU23, the memory cassette equipped with a clock is required.
The C200H-CPU01/CPU02/CPU03 does not support the clock function.
*7 The C200HE-CPU11 does not support the clock function.
*8 For the 20 points PLC module of CP1E (N type), only the direct CPU connection is available.
*9 Not compatible with the redundant Ethernet.

33.2 Serial Connection

33.2.1 System configuration for connecting to CPM1, CPM1A, CPM2A, CPM2C or CQM1

Communication driver
OMRON SYSMAC

■ When connecting to PLC or RS-232C

(1) When using the connector conversion box

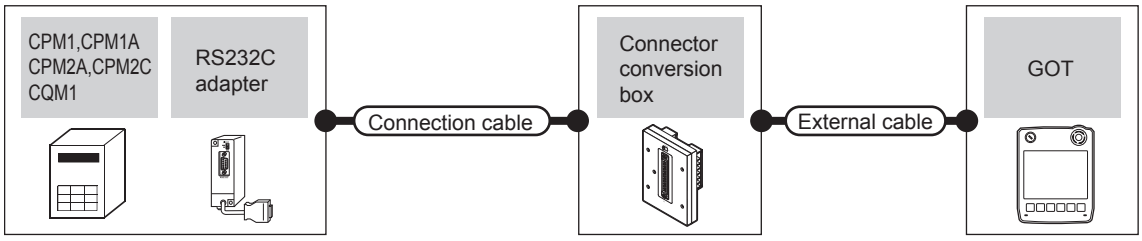

PLC			Connection cable	Connector conversion box	External cable	GOT model	Total distance	Number of connectable equipment
Model	RS-232C adapter*1	Communication type	Cable model Connection diagram number					
CPM2A CQM1	-	RS-232	GT09-C30R20101-9P(3m) or User preparing RS232 connection diagram 1)	GT11H-CNB-37S	GT11H-C30-37P(3m)	GT14 Handy	6m	1 GOT for 1 PLC
CPM1 CPM1A CPM2A CPM2C	CPM1-CIF01	RS-232	GT09-C30R20101-9P(3m) or User preparing RS232 connection diagram 1)			GT14 Handy	6m	1 GOT for 1 RS-232C adapter
CPM2C	CPM2C-CIF01-V1							

*1 Product manufactured by OMRON Corporation. For details on the product, contact OMRON Corporation.

(2) When using the external cable (GT11H-C□□□-37P)

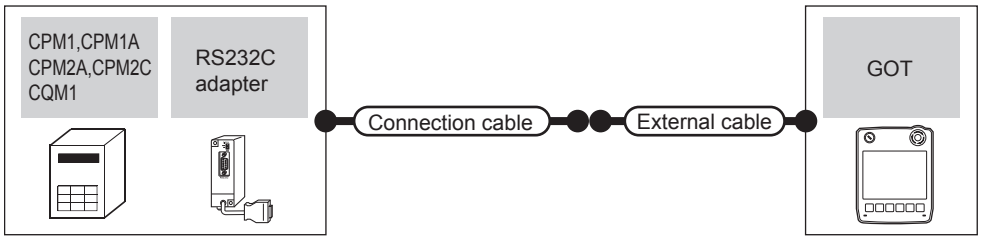

PLC			Connection cable	External cable	GOT model	Total distance	Number of connectable equipment
Model	RS-232C adapter*1	Communication type	Cable model Connection diagram number				
CPM2A CQM1	-	RS-232	User preparing RS232 connection diagram 2)	GT11H-C30-37P(3m)	GT14 Handy	6m	1 GOT for 1 PLC
CPM1 CPM1A CPM2A CPM2C	CPM1-CIF01	RS-232	User preparing RS232 connection diagram 2)	GT11H-C30-37P(3m)	GT14 Handy	6m	1 GOT for 1 RS-232C adapter
CPM2C	CPM2C-CIF01-V1						

*1 Product manufactured by OMRON Corporation. For details on the product, contact OMRON Corporation.

(3) When using the external cable (GT11H-C□□□)

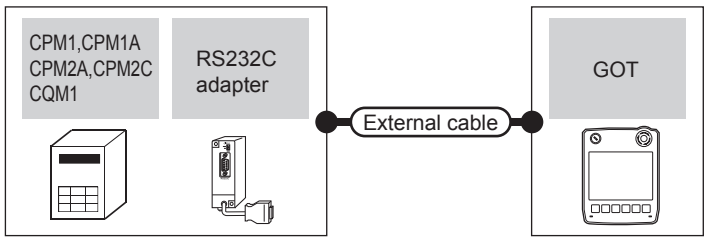

PLC			External cable	GOT model	Total distance	Number of connectable equipment
Model	RS-232C adapter*1	Communication type				
CPM2A CQM1	-	RS-232	GT11H-C30(3m) GT11H-C60(6m) User preparing RS232 connection diagram 3)	GT14 Handy	6m	1 GOT for 1 PLC
CPM1 CPM1A CPM2A CPM2C	CPM1-CIF01	RS-232	GT11H-C30(3m) GT11H-C60(6m) User preparing RS232 connection diagram 3)	GT14 Handy	6m	1 GOT for 1 RS-232C adapter
CPM2C	CPM2C-CIF01-V1					

*1 Product manufactured by OMRON Corporation. For details on the product, contact OMRON Corporation.

■ When connecting to OMRON connection cable

(1) When using the connector conversion box

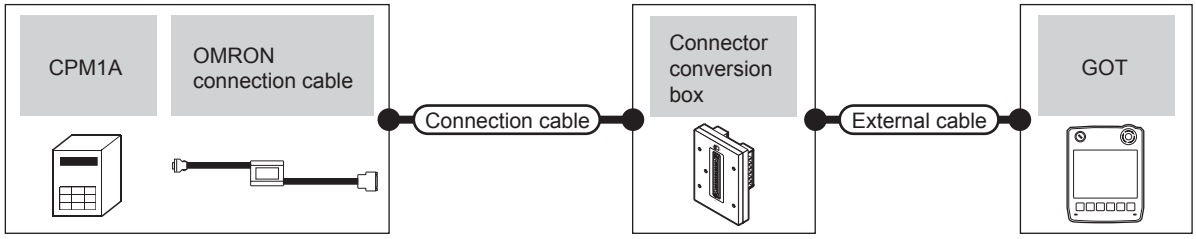

PLC			Connection cable	Connector conversion box	External cable	GOT model	Total distance	Number of connectable equipment
Model	OMRON connection cable*1	Communication type	Cable model Connection diagram number					
CPM1A	CQM1-CIF01	RS-232	GT09-C30R20102-25S(3m) or User preparing RS232 connection diagram 4)	GT11H-CNB-37S	GT11H-C30-37P(3m)	GT14 Handy	6m	1 GOT for 1 PLC
CPM2C	CPM2C-CN111	RS-232	GT09-C30R20101-9P(3m) or User preparing RS232 connection diagram 1)					

*1 Product manufactured by OMRON Corporation. For details on the product, contact OMRON Corporation.

(2) When using the external cable (GT11H-C□□□-37P)

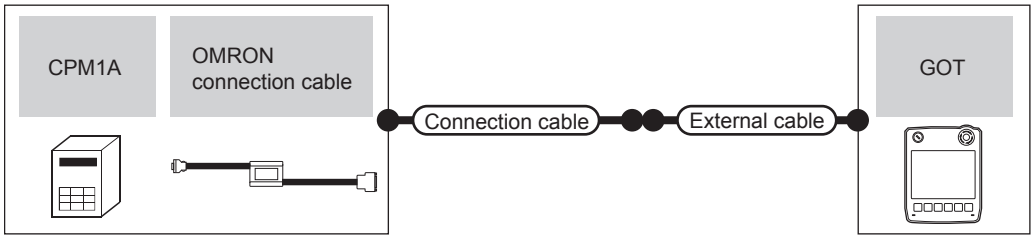

PLC			Connection cable	External cable	GOT model	Total distance	Number of connectable equipment
Model	OMRON connection cable*1	Communication type	Cable model Connection diagram number				
CPM1A	CQM1-CIF01	RS-232	User preparing RS232 connection diagram 5)	GT11H-C30-37P(3m)	GT14 Handy	6m	1 GOT for 1 PLC
CPM2C	CPM2C-CN111	RS-232	User preparing RS232 connection diagram 2)	GT11H-C30-37P(3m)			

*1 Product manufactured by OMRON Corporation. For details on the product, contact OMRON Corporation.

(3) When using the external cable (GT11H-C□□□)

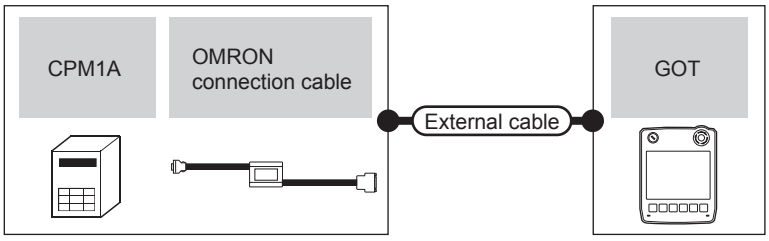

PLC			External cable	GOT model	Total distance	Number of connectable equipment
Model	OMRON connection cable*1	Communication type				
CPM1A	CQM1-CIF01	RS-232	GT11H-C30(3m) User preparing RS232 connection diagram 6)	GT14 Handy	6m	1 GOT for 1 PLC
CPM2C	CPM2C-CN111	RS-232	GT11H-C30(3m) User preparing RS232 connection diagram 3)			

*1 Product manufactured by OMRON Corporation. For details on the product, contact OMRON Corporation.

33.2.2 System configuration for connecting to CQM1H

Communication driver
OMRON SYSMAC

■ When connecting to PLC or serial communication board

(1) When using the connector conversion box

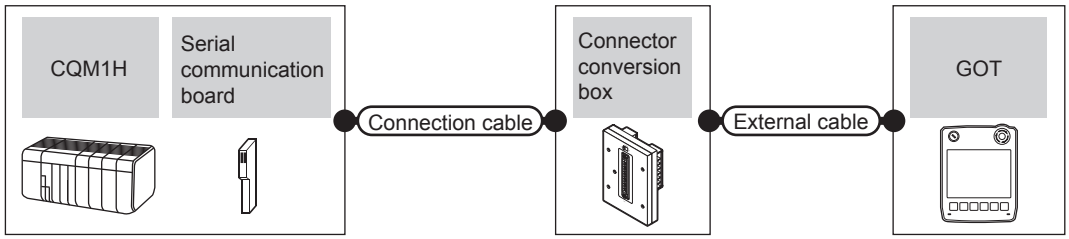

PLC			Connection cable	Connector conversion box	External cable	GOT model	Total distance	Number of connectable equipment
Model	Serial communication board*1	Communication type	Cable model Connection diagram number					
CQM 1H	-	RS-232	GT09-C30R20101-9P(3m) or User preparing RS232 connection diagram 1)	GT11H-CNB-37S	GT11H-C30-37P(3m)	GT14 Handy	6m	1 GOT for 1 PLC
	CQM1-SCB41	RS-232	GT09-C30R20101-9P(3m) or User preparing RS232 connection diagram 1)	GT11H-CNB-37S	GT11H-C30-37P(3m)	GT14 Handy	6m	1 GOT for 1 serial communication board
		RS-422	GT09-C30R40101-9P(3m) GT09-C100R40101-9P(10m) or User preparing RS422 connection diagram 7)	GT11H-CNB-37S	GT11H-C30-37P(3m) GT11H-C60-37P(6m) GT11H-C100-37P(10m)	GT14 Handy	13m	

*1 Product manufactured by OMRON Corporation. For details on the product, contact OMRON Corporation.

(2) When using the external cable (GT11H-C□□□-37P)

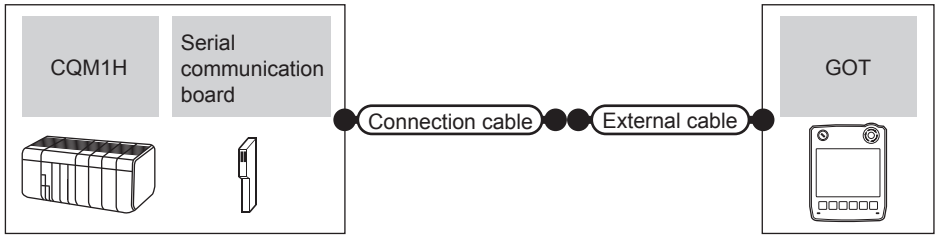

PLC			Connection cable	External cable	GOT model	Total distance	Number of connectable equipment
Model	Serial communication board*1	Communication type	Cable model Connection diagram number				
CQM 1H	-	RS-232	User preparing RS232 connection diagram 2)	GT11H-C30-37P(3m)	GT14 Handy	6m	1 GOT for 1 PLC
	CQM1-SCB41	RS-232	User preparing RS232 connection diagram 2)	GT11H-C30-37P(3m)	GT14 Handy	6m	1 GOT for 1 serial communication board
		RS-422	User preparing RS422 connection diagram 8)	GT11H-C30-37P(3m) GT11H-C60-37P(6m) GT11H-C100-37P(10m)	GT14 Handy	13m	

*1 Product manufactured by OMRON Corporation. For details on the product, contact OMRON Corporation.

(3) When using the external cable (GT11H-C□□□)

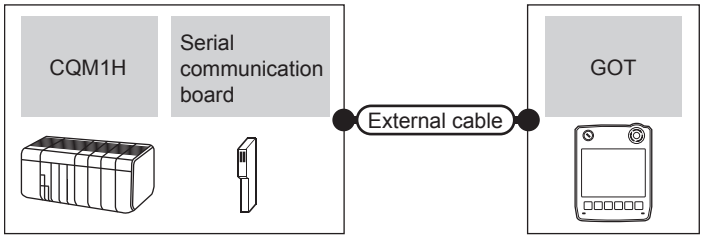

PLC			External cable	GOT model	Total distance	Number of connectable equipment
Model	Serial communication board*1	Communication type				
CQM 1H	-	RS-232	GT11H-C30 (3m) GT11H-C60 (6m) User preparing RS232 connection diagram 3)	GT14 Handy	6m	1 GOT for 1 PLC
	CQM1-SCB41	RS-232	GT11H-C30 (3m) GT11H-C60 (6m) User preparing RS232 connection diagram 3)	GT14 Handy	6m	1 GOT for 1 serial communication board
		RS-422	GT11H-C30 (3m) GT11H-C60 (6m) GT11H-C100 (10m) User preparing RS422 connection diagram 9)	GT14 Handy	13m	

*1 Product manufactured by OMRON Corporation. For details on the product, contact OMRON Corporation.

■ When connecting to OMRON connection cable

(1) When using the connector conversion box

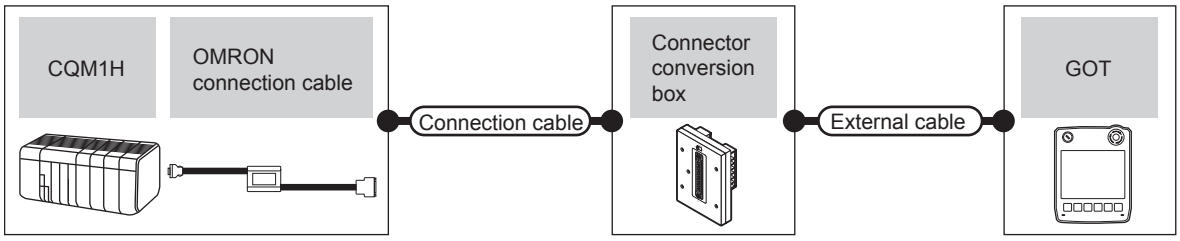

PLC			Connection cable	Connector conversion box	External cable	GOT model	Total distance	Number of connectable equipment
Model	OMRON connection cable*1	Communication type	Cable model Connection diagram number					
CQM 1H	CQM1-CIF02	RS-232	User preparing RS232 connection diagram 1)	GT11H-CNB-37S	GT11H-C30-37P(3m)	GT14 Handy	6m	1 GOT for 1 PLC

*1 Product manufactured by OMRON Corporation. For details on the product, contact OMRON Corporation.

(2) When using the external cable (GT11H-C□□□-37P)

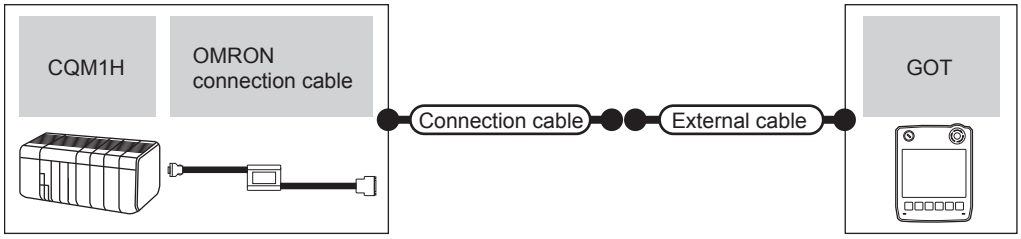

PLC			Connection cable	External cable	GOT model	Total distance	Number of connectable equipment
Model	OMRON connection cable*1	Communication type	Cable model Connection diagram number				
CQM 1H	CQM1-CIF02	RS-232	User preparing RS232 connection diagram 2)	GT11H-C30-37P(3m)	GT14 Handy	6m	1 GOT for 1 PLC

*1 Product manufactured by OMRON Corporation. For details on the product, contact OMRON Corporation.

(3) When using the external cable (GT11H-C□□□)

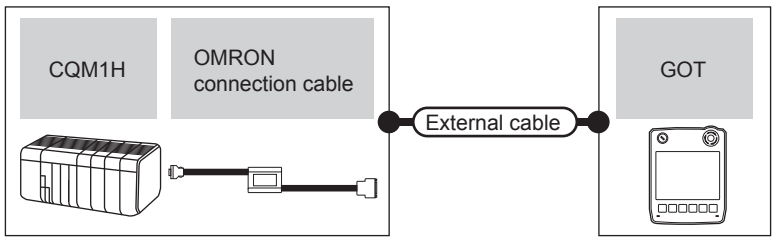

PLC			External cable	GOT model	Total distance	Number of connectable equipment
Model	OMRON connection cable*1	Communication type				
CQM 1H	CQM1-CIF02	RS-232	GT11H-C30 (3m) (User preparing) RS232 connection diagram 3)	GT14 Handy	6m	1 GOT for 1 PLC

*1 Product manufactured by OMRON Corporation. For details on the product, contact OMRON Corporation.

33.2.3 System configuration for connecting to CJ1H, CJ1G, CJ1M, CJ2H, or CJ2M

Communication driver
OMRON SYSMAC

(1) When using the connector conversion box

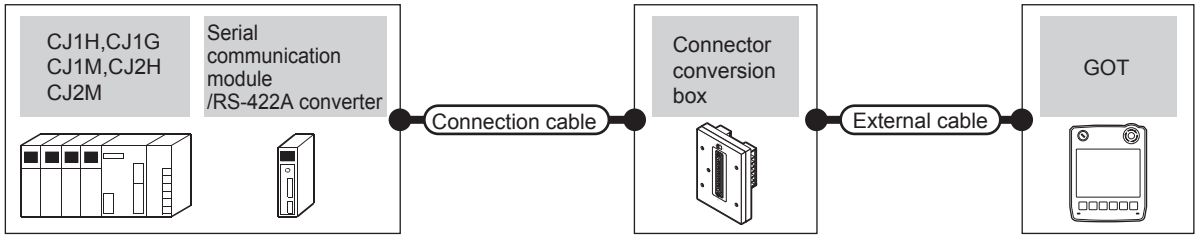

PLC			Connection cable	Connector conversion box	External cable	GOT model	Total distance	Number of connectable equipment
Model	Serial communication module/RS-422A converter/Option board*1	Communication type	Cable model Connection diagram number					
CJ1H, CJ1G, CJ1M, CJ2H, CJ2M-CPU1□	-	RS-232	GT09-C30R20101-9P(3m) or User preparing RS232 connection diagram 1)	GT11H-CNB-37S	GT11H-C30-37P(3m)	GT14 Handy	6m	1 GOT for 1 PLC
	CJ1W-CIF11	RS-422	GT09-C30R40103-5T(3m) GT09-C100R40103-5T(10m) or User preparing RS422 connection diagram 7)	GT11H-CNB-37S	GT11H-C30-37P(3m) GT11H-C60-37P(6m) GT11H-C100-37P(10m)	GT14 Handy	13m	1 GOT for 1 RS-422A converter
CJ1H, CJ1G, CJ1M, CJ2H, CJ2M-CPU1□, CJ2M-CPU3□	CJ1W-SCU21-V1 CJ1W-SCU41-V1	RS-232	GT09-C30R20101-9P(3m) or User preparing RS232 connection diagram 1)	GT11H-CNB-37S	GT11H-C30-37P(3m)	GT14 Handy	6m	1 GOT for 1 port of a serial communication module
	CJ1W-SCU41-V1 CJ1W-SCU31-V	RS-422	GT09-C30R40101-9P(3m) GT09-C100R40101-9P(10m) or User preparing RS422 connection diagram 7)	GT11H-CNB-37S	GT11H-C30-37P(3m) GT11H-C60-37P(6m) GT11H-C100-37P(10m)	GT14 Handy	13m	
CJ1H CJ1G CJ1M	CJ1W-SCU21 CJ1W-SCU41	RS-232	GT09-C30R20101-9P(3m) or User preparing RS232 connection diagram 1)	GT11H-CNB-37S	GT11H-C30-37P(3m)	GT14 Handy	6m	1 GOT for 1 port of a serial communication module
	CJ1W-SCU41	RS-422	GT09-C30R40101-9P(3m) GT09-C100R40101-9P(10m) or User preparing RS422 connection diagram 7)	GT11H-CNB-37S	GT11H-C30-37P(3m) GT11H-C60-37P(6m) GT11H-C100-37P(10m)	GT14 Handy	13m	
CJ2M-CPU3□	CP1W-CIF01	RS-232	GT09-C30R20101-9P(3m) or User preparing RS232 connection diagram 1)	GT11H-CNB-37S	GT11H-C30-37P(3m)	GT14 Handy	6m	1 GOT for 1 RS-232C option board
	CP1W-CIF11 CP1W-CIF12	RS-422	GT09-C30R40103-5T(3m) GT09-C100R40103-5T(10m) or User preparing RS422 connection diagram 10)	GT11H-CNB-37S	GT11H-C30-37P(3m) GT11H-C60-37P(6m) GT11H-C100-37P(10m)	GT14 Handy	13m	1 GOT for 1 RS-422A/ 485 option board

*1 Product manufactured by OMRON Corporation. For details on the product, contact OMRON Corporation.

(2) When using the external cable (GT11H-C□□□-37P)

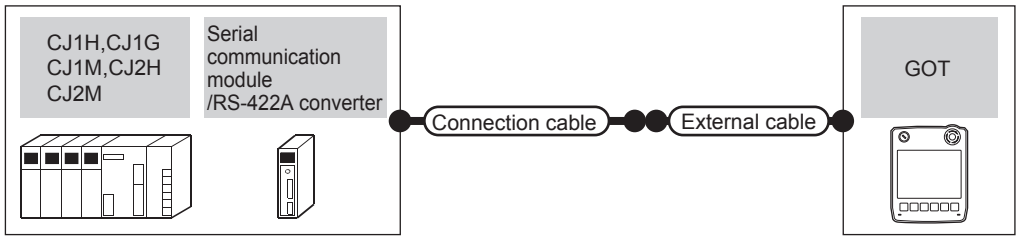

PLC			Connection cable	External cable	GOT model	Total distance	Number of connectable equipment
Model	Serial communication module/ RS-422A converter/Option board*1	Communication type	Cable model Connection diagram number				
CJ1H, CJ1G, CJ1M, CJ2H, CJ2M-CPU1□	-	RS-232	User preparing RS232 connection diagram 2)	GT11H-C30-37P(3m)	GT14 Handy	6m	1 GOT for1 PLC
	CJ1W-CIF11	RS-422	User preparing RS422 connection diagram 11)	GT11H-C30-37P(3m) GT11H-C60-37P(6m) GT11H-C100-37P(10m)	GT14 Handy	13m	1 GOT for 1 RS-422A converter
CJ1H, CJ1G, CJ1M, CJ2H, CJ2M-CPU1□, CJ2M-CPU3□	CJ1W-SCU21-V1 CJ1W-SCU41-V1	RS-232	User preparing RS232 connection diagram 2)	GT11H-C30-37P(3m)	GT14 Handy	6m	1 GOT for 1 port of a serial communication module
	CJ1W-SCU41-V1 CJ1W-SCU31-V	RS-422	User preparing RS422 connection diagram 8)	GT11H-C30-37P(3m) GT11H-C60-37P(6m) GT11H-C100-37P(10m)	GT14 Handy	13m	
CJ1H CJ1G CJ1M	CJ1W-SCU21 CJ1W-SCU41	RS-232	User preparing RS232 connection diagram 2)	GT11H-C30-37P(3m)	GT14 Handy	6m	1 GOT for 1 port of a serial communication module
	CJ1W-SCU41	RS-422	User preparing RS422 connection diagram 8)	GT11H-C30-37P(3m) GT11H-C60-37P(6m) GT11H-C100-37P(10m)	GT14 Handy	13m	
CJ2M-CPU3□	CP1W-CIF01	RS-232	User preparing RS232 connection diagram 2)	GT11H-C30-37P(3m)	GT14 Handy	6m	1 GOT for 1 RS-232C option board
	CP1W-CIF11 CP1W-CIF12	RS-422	User preparing RS422 connection diagram 11)	GT11H-C30-37P(3m) GT11H-C60-37P(6m) GT11H-C100-37P(10m)	GT14 Handy	13m	1 GOT for 1 RS-422A/ 485 option board

*1 Product manufactured by OMRON Corporation. For details on the product, contact OMRON Corporation.

(3) When using the external cable (GT11H-C□□□)

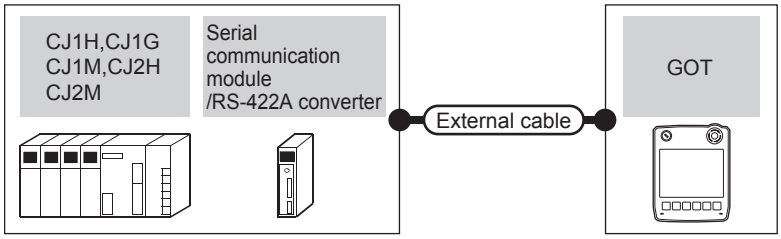

PLC			External cable	GOT model	Total distance	Number of connectable equipment
Model	Serial communication module/RS-422A converter/Option board*1	Communication type				
CJ1H, CJ1G, CJ1M, CJ2H, CJ2M-CPU1□	-	RS-232	GT11H-C30 (3m) GT11H-C60 (6m) User preparing RS232 connection diagram 3)	GT14 Handy	6m	1 GOT for 1 PLC
	CJ1W-CIF11	RS-422	GT11H-C30 (3m) GT11H-C60 (6m) GT11H-C100 (10m) User preparing RS422 connection diagram 12)	GT14 Handy	13m	1 GOT for 1 RS-422A converter
CJ1H, CJ1G, CJ1M, CJ2H, CJ2M-CPU1□, CJ2M-CPU3□	CJ1W-SCU21-V1 CJ1W-SCU41-V1	RS-232	GT11H-C30 (3m) GT11H-C60 (6m) User preparing RS232 connection diagram 3)	GT14 Handy	6m	1 GOT for 1 port of a serial communication module
	CJ1W-SCU41-V1 CJ1W-SCU31-V	RS-422	GT11H-C30 (3m) GT11H-C60 (6m) GT11H-C100 (10m) User preparing RS422 connection diagram 9)	GT14 Handy	13m	
CJ1H CJ1G CJ1M	CJ1W-SCU21 CJ1W-SCU41	RS-232	GT11H-C30 (3m) GT11H-C60 (6m) User preparing RS232 connection diagram 3)	GT14 Handy	6m	1 GOT for 1 port of a serial communication module
	CJ1W-SCU41	RS-422	GT11H-C30 (3m) GT11H-C60 (6m) GT11H-C100 (10m) User preparing RS422 connection diagram 9)	GT14 Handy	13m	
CJ2M-CPU3□	CP1W-CIF01	RS-232	GT11H-C30 (3m) GT11H-C60 (6m) User preparing RS232 connection diagram 3)	GT14 Handy	6m	1 GOT for 1 RS-232C option board
	CP1W-CIF11 CP1W-CIF12	RS-422	GT11H-C30 (3m) GT11H-C60 (6m) GT11H-C100 (10m) User preparing RS422 connection diagram 12)	GT14 Handy	13m	1 GOT for 1 RS-422A/485 option board

33.2.4 System configuration for connecting to CP1H, CP1L, or CP1E

Communication driver
OMRON SYSMAC

■ When connecting a PLC or option board

(1) When using the connector conversion box

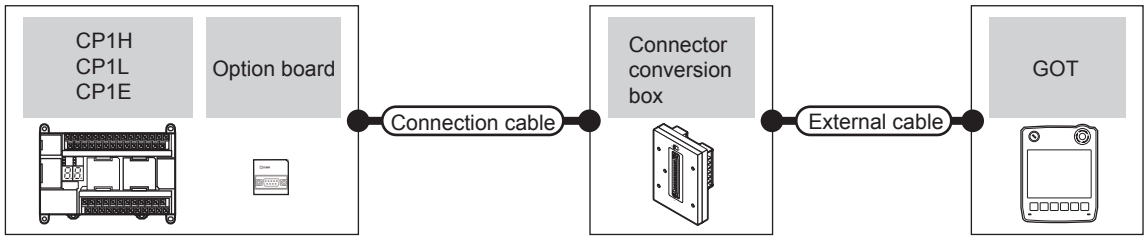

PLC			Connection cable	Connector conversion box	External cable	GOT model	Total distance	Number of connectable equipment
Model	Option board*1	Communication type	Cable model Connection diagram number					
CP1E	-	RS-232	GT09-C30R20101-9P(3m) or User preparing RS232 connection diagram 1)	GT11H-CNB-37S	GT11H-C30-37P(3m)	GT14 Handy	6m	1 GOT for 1 PLC
CP1H CP1L CP1E	CP1W-CIF01	RS-232	GT09-C30R20101-9P(3m) or User preparing RS232 connection diagram 1)	GT11H-CNB-37S	GT11H-C30-37P(3m)	GT14 Handy	6m	1 GOT for 1 RS-232C option board
	CP1W-CIF11 CP1W-CIF12	RS-422	GT09-C30R40103-5T(3m) GT09-C100R40103-5T(10m) or User preparing RS422 connection diagram 10)	GT11H-CNB-37S	GT11H-C30-37P(3m) GT11H-C60-37P(6m) GT11H-C100-37P(10m)	GT14 Handy	13m	1 GOT for 1 RS-422A/485 option board

*1 Product manufactured by OMRON Corporation. For details on the product, contact OMRON Corporation.

(2) When using the external cable (GT11H-C□□□-37P)

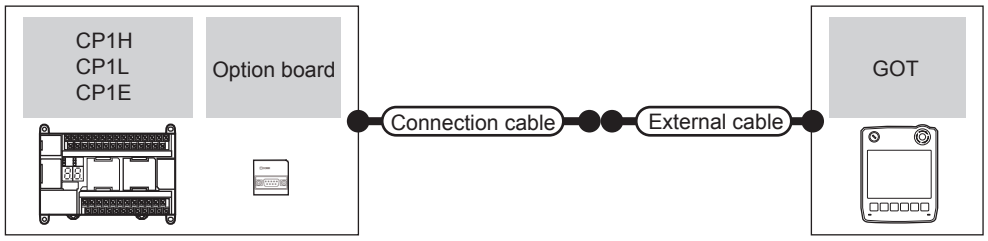

PLC			Connection cable	External cable	GOT model	Total distance	Number of connectable equipment
Model	Option board*1	Communication type	Cable model Connection diagram number				
CP1E	-	RS-232	User preparing RS232 connection diagram 2)	GT11H-C30-37P(3m)	GT14 Handy	6m	1 GOT for 1 PLC
CP1H CP1L CP1E	CP1W-CIF01	RS-232	User preparing RS232 connection diagram 2)	GT11H-C30-37P(3m)	GT14 Handy	6m	1 GOT for 1 RS-232C option board
	CP1W-CIF11 CP1W-CIF12	RS-422	User preparing RS422 connection diagram 11)	GT11H-C30-37P(3m) GT11H-C60-37P(6m) GT11H-C100-37P(10m)	GT14 Handy	13m	1 GOT for 1 RS-422A/485 option board

*1 Product manufactured by OMRON Corporation. For details on the product, contact OMRON Corporation.

(3) When using the external cable (GT11H-C□□□)

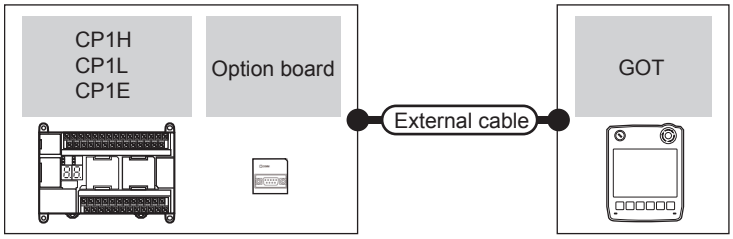

PLC			External cable	GOT model	Total distance	Number of connectable equipment
Model	Option board*1	Communication type				
CP1E	-	RS-232	GT11H-C30 (3m) GT11H-C60 (6m) (User preparing) RS232 connection diagram 3)	GT14 Handy	6m	1 GOT for 1 PLC
CP1H CP1L CP1E	CP1W-CIF01	RS-232	GT11H-C30 (3m) GT11H-C60 (6m) (User preparing) RS232 connection diagram 3)	GT14 Handy	6m	1 GOT for 1 RS-232C option board
	CP1W-CIF11 CP1W-CIF12	RS-422	GT11H-C30 (3m) GT11H-C60 (6m) GT11H-C100 (10m) (User preparing) RS422 connection diagram 12)	GT14 Handy	13m	1 GOT for 1 RS-422A/485 option board

■ When connecting to serial communication module

(1) When using the connector conversion box

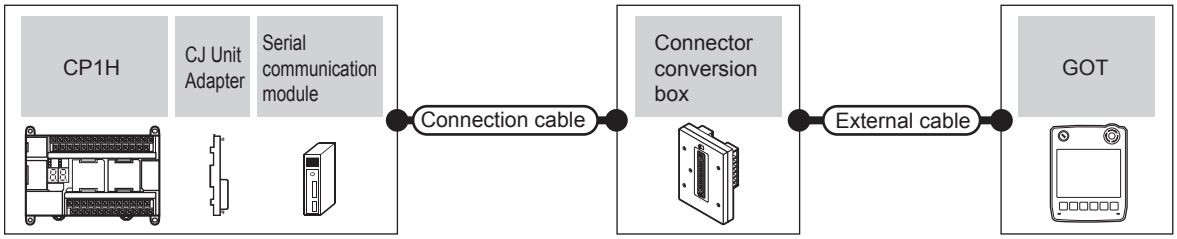

PLC				Connection cable	Connector conversion box	External cable	GOT model	Total distance	Number of connectable equipment
Model	CJ unit adapter*1	Serial communication module*1	Communication type	Cable model Connection diagram number					
CP1H	CP1W-EXT01	CJ1W-SCU21 CJ1W-SCU41 CJ1W-SCU21-V1 CJ1W-SCU41-V1	RS-232	GT09-C30R20101-9P(3m) or (User preparing) RS232 connection diagram 1)	GT11H-CNB-37S	GT11H-C30-37P(3m)	GT14 Handy	6m	1 GOT for 1 port of a serial communication module
		CJ1W-SCU41 CJ1W-SCU41-V1 CJ1W-SCU31-V1	RS-422	GT09-C30R40101-9P(3m) GT09-C100R40101-9P(10m) or (User preparing) RS422 connection diagram 7)	GT11H-CNB-37S	GT11H-C30-37P(3m) GT11H-C60-37P(6m) GT11H-C100-37P(10m)	GT14 Handy	13m	

*1 Product manufactured by OMRON Corporation. For details on the product, contact OMRON Corporation.

(2) When using the external cable (GT11H-C□□□-37P)

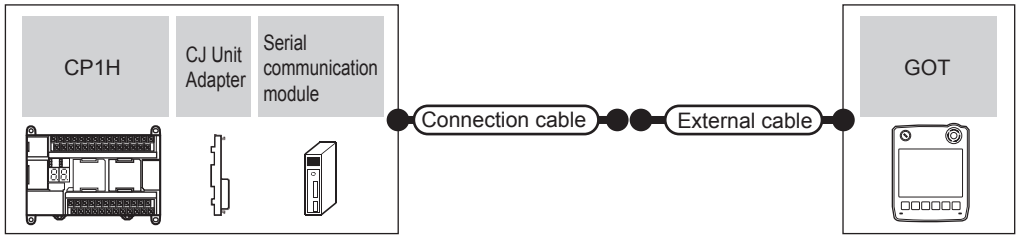

PLC				Connection cable	External cable	GOT model	Total distance	Number of connectable equipment
Model	CJ unit adapter*1	Serial communication module*1	Communication type	Cable model Connection diagram number				
CP1H	CP1W-EXT01	CJ1W-SCU21 CJ1W-SCU41 CJ1W-SCU21-V1 CJ1W-SCU41-V1	RS-232	User preparing RS232 connection diagram 2)	GT11H-C30-37P(3m)	GT14 Handy	6m	1 GOT for 1 port of a serial communication module
		CJ1W-SCU41 CJ1W-SCU41-V1 CJ1W-SCU31-V1	RS-422	User preparing RS422 connection diagram 8)	GT11H-C30-37P(3m) GT11H-C60-37P(6m) GT11H-C100-37P(10m)	GT14 Handy	13m	

*1 Product manufactured by OMRON Corporation. For details on the product, contact OMRON Corporation.

(3) When using the external cable (GT11H-C□□□)

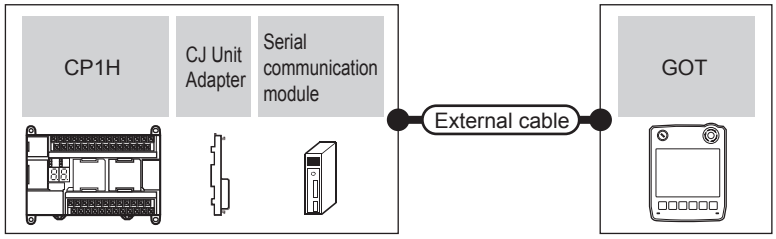

PLC				External cable	GOT model	Total distance	Number of connectable equipment
Model	CJ unit adapter*1	Serial communication module*1	Communication type				
CP1H	CP1W-EXT01	CJ1W-SCU21 CJ1W-SCU41 CJ1W-SCU21-V1 CJ1W-SCU41-V1	RS-232	GT11H-C30 (3m) GT11H-C60 (6m) User preparing RS232 connection diagram 3)	GT14 Handy	6m	1 GOT for 1 port of a serial communication module
		CJ1W-SCU41 CJ1W-SCU41-V1 CJ1W-SCU31-V1	RS-422	GT11H-C30 (3m) GT11H-C60 (6m) GT11H-C100 (10m) User preparing RS422 connection diagram 9)	GT14 Handy	13m	

*1 Product manufactured by OMRON Corporation. For details on the product, contact OMRON Corporation.

33.2.5 System configuration for connecting to C200HS, C200H, C200HX, C200HG, or C200HE

Communication driver
OMRON SYSMAC

■ When connecting to PLC or rack type host link unit

(1) When using the connector conversion box

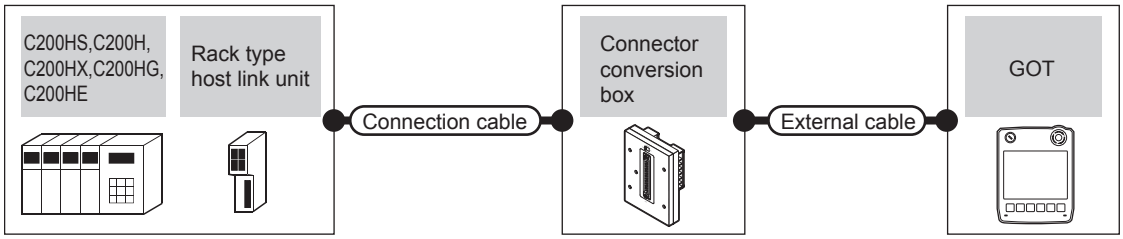

PLC			Connection cable	Connector conversion box	External cable	GOT model	Total distance	Number of connectable equipment
Model	Rack type host link unit*1	Communication type	Cable model Connection diagram number					
C200HX C200HG C200HE	-	RS-232	GT09-C30R20101-9P(3m) or User preparing RS232 connection diagram 1)	GT11H-CNB-37S	GT11H-C30-37P(3m)	GT14 Handy	6m	1 GOT for 1 PLC
C200HS C200H C200HX C200HG C200HE	C200H-LK201-V1	RS-232	GT09-C30R20103-25P(3m) or User preparing RS232 connection diagram 7)	GT11H-CNB-37S	GT11H-C30-37P(3m)	GT14 Handy	6m	1 GOT for 1 rack type host link unit
	C200H-LK202-V1	RS-422	GT09-C30R40102-9P(3m) GT09-C100R40102-9P(10m) or User preparing RS422 connection diagram 4)	GT11H-CNB-37S	GT11H-C30-37P(3m) GT11H-C60-37P(6m) GT11H-C100-37P(10m)	GT14 Handy	13m	

*1 Product manufactured by OMRON Corporation. For details on the product, contact OMRON Corporation.

(2) When using the external cable (GT11H-C□□□-37P)

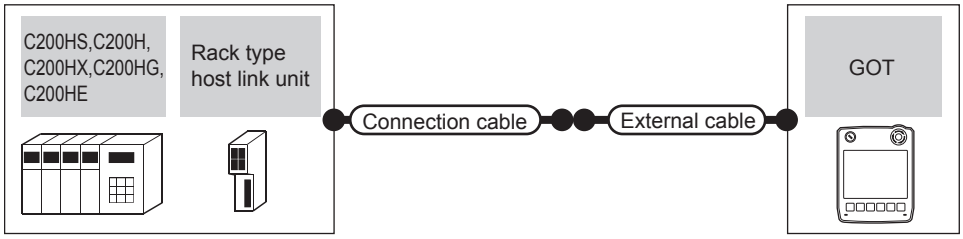

PLC			Connection cable	External cable	GOT model	Total distance	Number of connectable equipment
Model	Rack type host link unit*1	Communication type	Cable model Connection diagram number				
C200HX C200HG C200HE	-	RS-232	User preparing RS232 connection diagram 2)	GT11H-C30-37P(3m)	GT14 Handy	6m	1 GOT for 1 PLC
C200HS C200H	C200H-LK201-V1	RS-232	User preparing RS232 connection diagram 8)	GT11H-C30-37P(3m)	GT14 Handy	6m	1 GOT for 1 rack type host link unit
C200HX C200HG C200HE	C200H-LK202-V1	RS-422	User preparing RS232 connection diagram 5)	GT11H-C30-37P(3m) GT11H-C60-37P(6m) GT11H-C100-37P(10m)	GT14 Handy	13m	

*1 Product manufactured by OMRON Corporation. For details on the product, contact OMRON Corporation.

(3) When using the external cable (GT11H-C□□□)

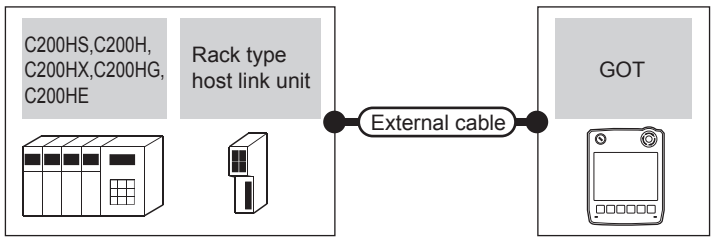

PLC			External cable	GOT model	Total distance	Number of connectable equipment
Model	Rack type host link unit*1	Communication type				
C200HX C200HG C200HE	-	RS-232	GT11H-C30 (3m) GT11H-C60 (6m) User preparing RS232 connection diagram 3)	GT14 Handy	6m	1 GOT for 1 PLC
C200HS C200H C200HX C200HG C200HE	C200H-LK201-V1	RS-232	GT11H-C30 (3m) GT11H-C60 (6m) User preparing RS232 connection diagram 9)	GT14 Handy	6m	1 GOT for 1 rack type host link unit
	C200H-LK202-V1	RS-422	GT11H-C30(3m) GT11H-C60(6m) GT11H-C100(10m) User preparing RS422 connection diagram 6)	GT14 Handy	13m	

*1 Product manufactured by OMRON Corporation. For details on the product, contact OMRON Corporation.

■ When connecting to a communication board

(1) When using the connector conversion box

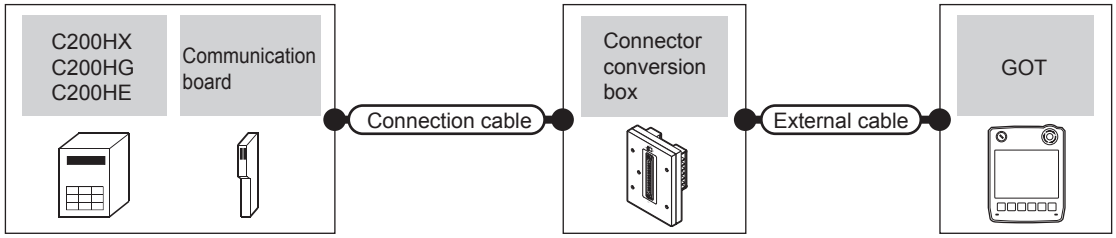

PLC			Connection cable	Connector conversion box	External cable	GOT model	Total distance	Number of connectable equipment
Model	Communication board*1	Communication type	Cable model Connection diagram number					
C200HX C200HG C200HE*2	C200HW-COM02 C200HW-COM05 C200HW-COM06	RS-232	GT09-C30R20101-9P(3m) or User preparing RS232 connection diagram 1)	GT11H-CNB-37S	GT11H-C30-37P(3m)	GT14 Handy	6m	1 GOT for 1 port of a serial communication module
	C200HW-COM03 C200HW-COM06	RS-422	GT09-C30R40101-9P(3m) GT09-C100R40101-9P(10m) or User preparing RS422 connection diagram 7)	GT11H-CNB-37S	GT11H-C30-37P(3m) GT11H-C60-37P(6m) GT11H-C100-37P(10m)	GT14 Handy	13m	

*1 Product manufactured by OMRON Corporation. For details on the product, contact OMRON Corporation.

*2 The C200HE-CPU11 does not support communication board.
Use a host Link unit.

(2) When using the external cable (GT11H-C□□□-37P)

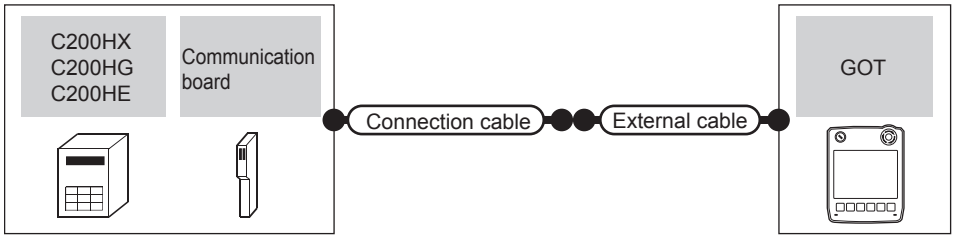

PLC			Connection cable	External cable	GOT model	Total distance	Number of connectable equipment
Model	Communication board*1	Communication type	Cable model Connection diagram number				
C200HX C200HG C200HE*2	C200HW-COM02 C200HW-COM05 C200HW-COM06	RS-232	User preparing RS232 connection diagram 2)	GT11H-C30-37P(3m)	GT14 Handy	6m	1 GOT for 1 port of a serial communication module
	C200HW-COM03 C200HW-COM06	RS-422	User preparing RS422 connection diagram 8)	GT11H-C30-37P(3m) GT11H-C60-37P(6m) GT11H-C100-37P(10m)	GT14 Handy	13m	

*1 Product manufactured by OMRON Corporation. For details on the product, contact OMRON Corporation.
*2 The C200HE-CPU11 does not support communication board.
Use a host Link unit.

(3) When using the external cable (GT11H-C□□□)

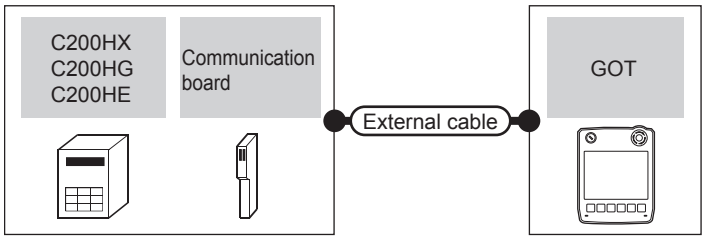

PLC			External cable	GOT model	Total distance	Number of connectable equipment
Model	Communication board*1	Communication type				
C200HX C200HG C200HE*2	C200HW-COM02 C200HW-COM05 C200HW-COM06	RS-232	GT11H-C30 (3m) GT11H-C60 (6m) User preparing RS232 connection diagram 3)	GT14 Handy	6m	1 GOT for 1 port of a serial communication module
	C200HW-COM03 C200HW-COM06	RS-422	GT11H-C30 (3m) GT11H-C60 (6m) GT11H-C100 (10m) User preparing RS422 connection diagram 9)	GT14 Handy	13m	

*1 Product manufactured by OMRON Corporation. For details on the product, contact OMRON Corporation.
*2 The C200HE-CPU11 does not support communication board.
Use a host Link unit.

33.2.6 System configuration for connecting to CS1H, CS1G, or CS1D

Communication driver
OMRON SYSMAC

■ When connecting to a PLC or a serial communication module

(1) When using the connector conversion box

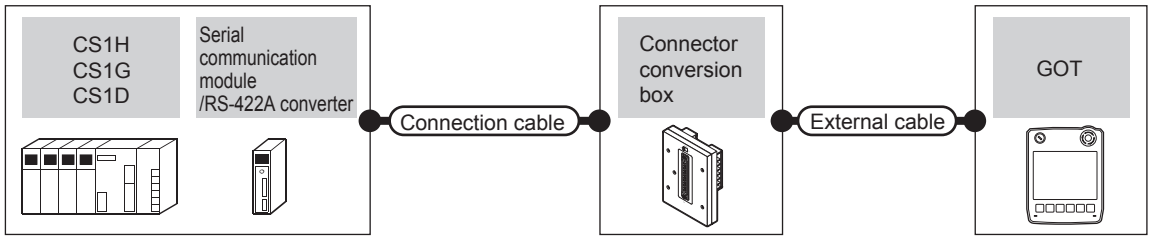

PLC			Connection cable	Connector conversion box	External cable	GOT model	Total distance	Number of connectable equipment
Model	Serial communication module/RS-422A converter*1	Communication type	Cable model Connection diagram number					
CS1H CS1G CS1D	-	RS-232	GT09-C30R20101-9P(3m) or User preparing RS232 connection diagram 1)	GT11H-CNB-37S	GT11H-C30-37P(3m)	GT14 Handy	6m	1 GOT for 1 PLC
	CS1W-SCU21 CS1W-SCU21-V1	RS-232	GT09-C30R20101-9P(3m) or User preparing RS232 connection diagram 1)	GT11H-CNB-37S	GT11H-C30-37P(3m)	GT14 Handy	6m	1 GOT for 1 serial communication module
	CJ1W-CIF11	RS-422	GT09-C30R40103-5T(3m) GT09-C100R40103-5T(10m) or User preparing RS422 connection diagram 10)	GT11H-CNB-37S	GT11H-C30-37P(3m) GT11H-C60-37P(6m) GT11H-C100-37P(10m)	GT14 Handy	13m	1 GOT for 1 RS-422A converter

*1 Product manufactured by OMRON Corporation. For details on the product, contact OMRON Corporation.

(2) When using the external cable (GT11H-C□□□-37P)

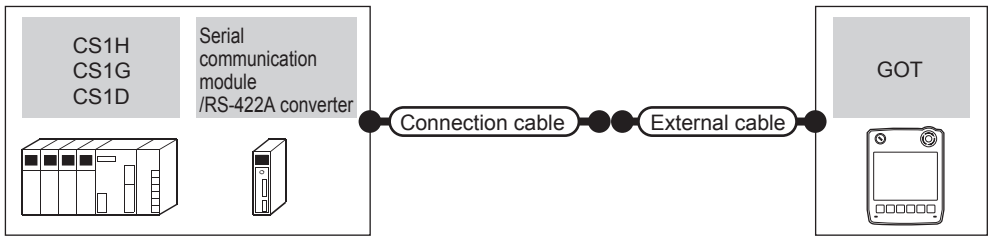

PLC			Connection cable	External cable	GOT model	Total distance	Number of connectable equipment
Model	Serial communication module/RS-422A converter*1	Communication type	Cable model Connection diagram number				
CS1H CS1G CS1D	-	RS-232	User preparing RS232 connection diagram 2)	GT11H-C30-37P(3m)	GT14 Handy	6m	1 GOT for 1 PLC
	CS1W-SCU21 CS1W-SCU21-V1	RS-232	User preparing RS232 connection diagram 2)	GT11H-C30-37P(3m)	GT14 Handy	6m	1 GOT for 1 serial communication module
	CJ1W-CIF11	RS-422	User preparing RS422 connection diagram 11)	GT11H-C30-37P(3m) GT11H-C60-37P(6m) GT11H-C100-37P(10m)	GT14 Handy	13m	1 GOT for 1 RS-422A converter

*1 Product manufactured by OMRON Corporation. For details on the product, contact OMRON Corporation.

(3) When using the external cable (GT11H-C□□□)

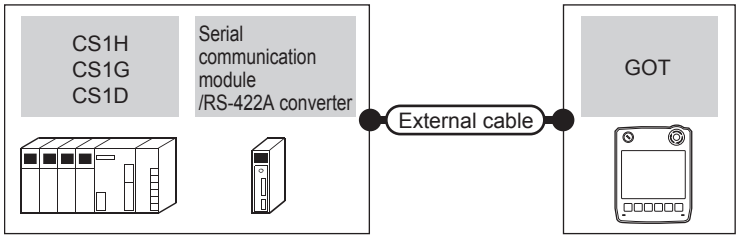

PLC			External cable	GOT model	Total distance	Number of connectable equipment
Model	Serial communication module/RS-422A converter*1	Communication type				
CS1H CS1G CS1D	-	RS-232	GT11H-C30 (3m) GT11H-C60 (6m) (User preparing) RS232 connection diagram 3)	GT14 Handy	6m	1 GOT for 1 PLC
	CS1W-SCU21 CS1W-SCU21-V1	RS-232	GT11H-C30 (3m) GT11H-C60 (6m) (User preparing) RS232 connection diagram 3)	GT14 Handy	6m	1 GOT for 1 serial communication module
	CJ1W-CIF11	RS-422	GT11H-C30 (3m) GT11H-C60 (6m) GT11H-C100 (10m) (User preparing) RS422 connection diagram 12)	GT14 Handy	13m	1 GOT for 1 RS-422A converter

*1 Product manufactured by OMRON Corporation. For details on the product, contact OMRON Corporation.

■ When connecting to a serial communication board

(1) When using the connector conversion box

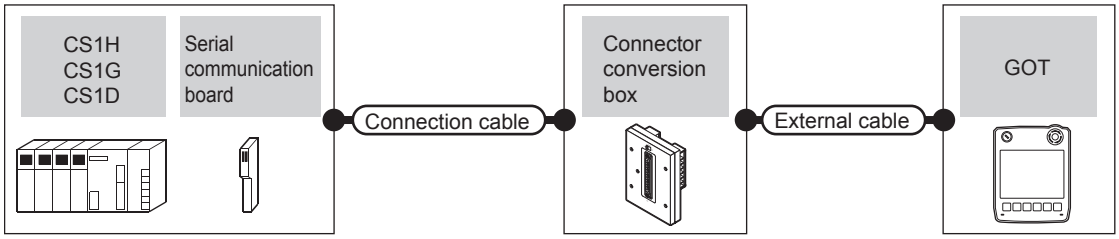

PLC			Connection cable	Connector conversion box	External cable	GOT model	Total distance	Number of connectable equipment
Model	Serial communication board*1	Communication type	Cable model Connection diagram number					
CS1H CS1G CS1D	CS1W-SCB21 CS1W-SCB41 CS1W-SCB21-V1 CS1W-SCB41-V1	RS-232	GT09-C30R20101-9P(3m) or (User preparing) RS232 connection diagram 1)	GT11H-CNB-37S	GT11H-C30-37P(3m)	GT14 Handy	6m	1 GOT for 1 serial communication board
	CS1W-SCB41 CS1W-SCB41-V1	RS-422	GT09-C30R40101-9P(3m) GT09-C100R40101-9P(10m) or (User preparing) RS422 connection diagram 7)	GT11H-CNB-37S	GT11H-C30-37P(3m) GT11H-C60-37P(6m) GT11H-C100-37P(10m)	GT14 Handy	13m	

*1 Product manufactured by OMRON Corporation. For details on the product, contact OMRON Corporation.

(2) When using the external cable (GT11H-C□□□-37P)

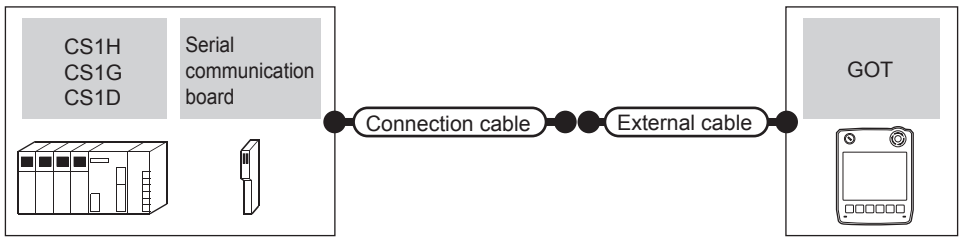

PLC			Connection cable	External cable	GOT model	Total distance	Number of connectable equipment
Model	Serial communication board*1	Communication type	Cable model Connection diagram number				
CS1H CS1G CS1D	CS1W-SCB21 CS1W-SCB41 CS1W-SCB21-V1 CS1W-SCB41-V1	RS-232	User preparing RS232 connection diagram 2)	GT11H-C30-37P(3m)	GT14 Handy	6m	1 GOT for 1 serial communication board
	CS1W-SCB41 CS1W-SCB41-V1	RS-422	User preparing RS422 connection diagram 8)	GT11H-C30-37P(3m) GT11H-C60-37P(6m) GT11H-C100-37P(10m)	GT14 Handy	13m	

*1 Product manufactured by OMRON Corporation. For details on the product, contact OMRON Corporation.

(3) When using the external cable (GT11H-C□□□)

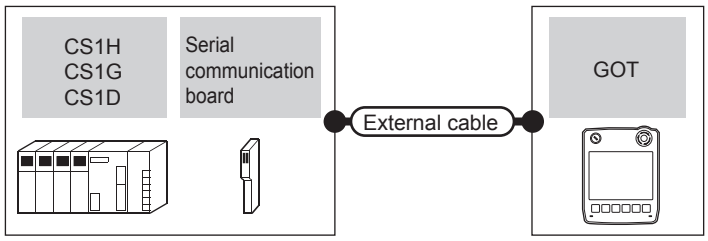

PLC			External cable	GOT model	Total distance	Number of connectable equipment
Model	Serial communication board*1	Communication type				
CS1H CS1G CS1D	CS1W-SCB21 CS1W-SCB41 CS1W-SCB21-V1 CS1W-SCB41-V1	RS-232	GT11H-C30 (3m) GT11H-C60 (6m) User preparing RS232 connection diagram 3)	GT14 Handy	6m	1 GOT for 1 serial communication board
	CS1W-SCB41 CS1W-SCB41-V1	RS-422	GT11H-C30 (3m) GT11H-C60 (6m) GT11H-C100 (10m) User preparing RS422 connection diagram 9)	GT14 Handy	13m	

*1 Product manufactured by OMRON Corporation. For details on the product, contact OMRON Corporation.

33.2.7 System configuration for connecting to C1000H or C2000H

Communication driver
OMRON SYSMAC

(1) When using the connector conversion box

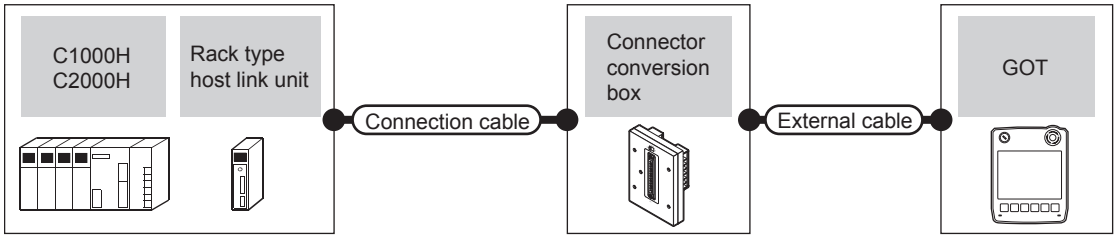

PLC			Connection cable	Connector conversion box	External cable	GOT model	Total distance	Number of connectable equipment
Model	Rack type host link unit*1	Communication type	Cable model Connection diagram number					
C1000H C2000H	C500-LK201-V1	RS-232	GT09-C30R20103-25P(3m) or User preparing RS232 connection diagram 7)	GT11H-CNB-37S	GT11H-C30-37P(3m)	GT14 Handy	6m	1 GOT for 1 port of a rack type host link unit
		RS-422	User preparing RS422 connection diagram 4)	GT11H-CNB-37S	GT11H-C30-37P(3m) GT11H-C60-37P(6m) GT11H-C100-37P(10m)	GT14 Handy	13m	

*1 Product manufactured by OMRON Corporation. For details on the product, contact OMRON Corporation.

(2) When using the external cable (GT11H-C□□□-37P)

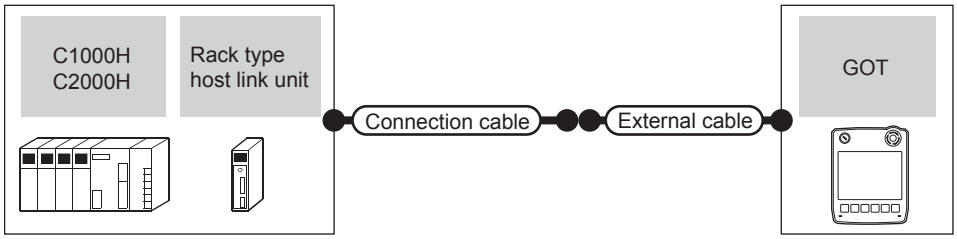

PLC			Connection cable	External cable	GOT model	Total distance	Number of connectable equipment
Model	Rack type host link unit*1	Communication type	Cable model Connection diagram number				
C1000H C2000H	C500-LK201-V1	RS-232	User preparing RS232 connection diagram 8)	GT11H-C30-37P(3m)	GT14 Handy	6m	1 GOT for 1 port of a rack type host link unit
		RS-422	User preparing RS422 connection diagram 5)	GT11H-C30-37P(3m) GT11H-C60-37P(6m) GT11H-C100-37P(10m)	GT14 Handy	13m	

*1 Product manufactured by OMRON Corporation. For details on the product, contact OMRON Corporation.

(3) When using the external cable (GT11H-C□□□)

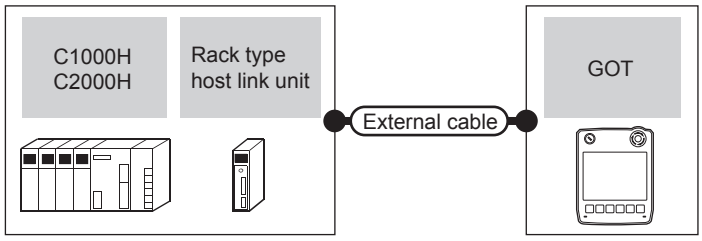

PLC			External cable	GOT model	Total distance	Number of connectable equipment
Model	Rack type host link unit*1	Communication type				
C1000H C2000H	C500-LK201-V1	RS-232	GT11H-C30 (3m) GT11H-C60 (6m) User preparing RS232 connection diagram 9)	GT14 Handy	6m	1 GOT for 1 port of a rack type host link unit
		RS-422	GT11H-C30(3m) GT11H-C60(6m) GT11H-C100(10m) User preparing RS422 connection diagram 6)	GT14 Handy	13m	

*1 Product manufactured by OMRON Corporation. For details on the product, contact OMRON Corporation.

33.2.8 System configuration for connecting to CV500, CV1000, CV2000, or CVM1

Communication driver
OMRON SYSMAC

(1) When using the connector conversion box

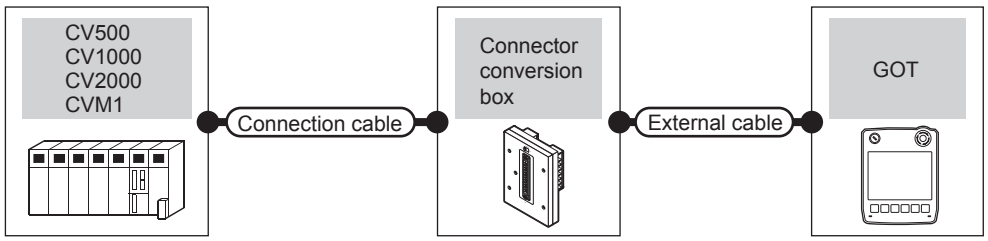

PLC		Connection cable	Connector conversion box	External cable	GOT model	Total distance	Number of connectable equipment
Model	Communication type	Cable model Connection diagram number					
CV500 CV1000 CV2000 CVM1	RS-232	GT09-C30R20101-9P(3m) or User preparing RS232 connection diagram 1)	GT11H-CNB-37S	GT11H-C30-37P(3m)	GT14 Handy	6m	1 GOT for 1 PLC
	RS-422	GT09-C30R40101-9P(3m) GT09-C100R40101-9P(10m) or User preparing RS422 connection diagram 1)	GT11H-CNB-37S	GT11H-C30-37P(3m) GT11H-C60-37P(6m) GT11H-C100-37P(10m)	GT14 Handy	13m	

(2) When using the external cable (GT11H-C□□□-37P)

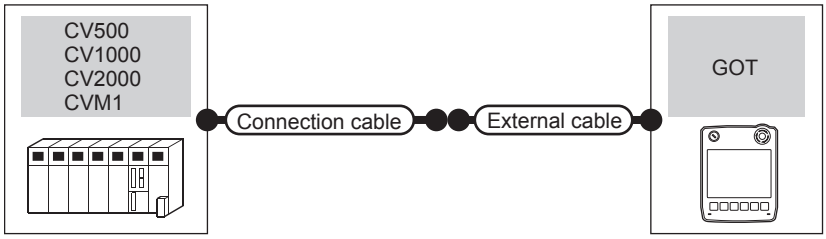

PLC		Connection cable	External cable	GOT model	Total distance	Number of connectable equipment
Model	Communication type	Cable model Connection diagram number				
CV500 CV1000 CV2000 CVM1	RS-232	User preparing RS232 connection diagram 2)	GT11H-C30-37P(3m)	GT14 Handy	6m	1 GOT for 1 PLC
	RS-422	User preparing RS422 connection diagram 2)	GT11H-C30-37P(3m) GT11H-C60-37P(6m) GT11H-C100-37P(10m)	GT14 Handy	13m	

(3) When using the external cable (GT11H-C□□□)

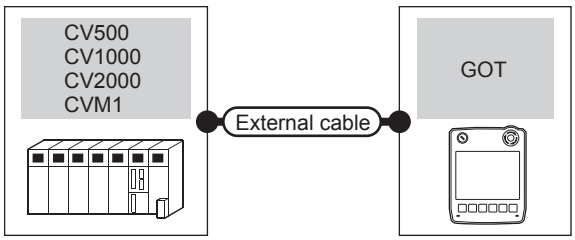

PLC		External cable	GOT model	Total distance	Number of connectable equipment
Model	Communication type				
CV500 CV1000 CV2000 CVM1	RS-232	GT11H-C30 (3m) GT11H-C60 (6m) User preparing RS232 connection diagram 3)	GT14 Handy	6m	1 GOT for 1 PLC
	RS-422	GT11H-C30(3m) GT11H-C60(6m) GT11H-C100(10m) User preparing RS422 connection diagram 3)	GT14 Handy	13m	

33.2.9 Connection diagram

The following diagram shows the connection between the GOT and the PLC.

■ RS-232 cable

(1) Connection diagram

RS232 connection diagram 1)

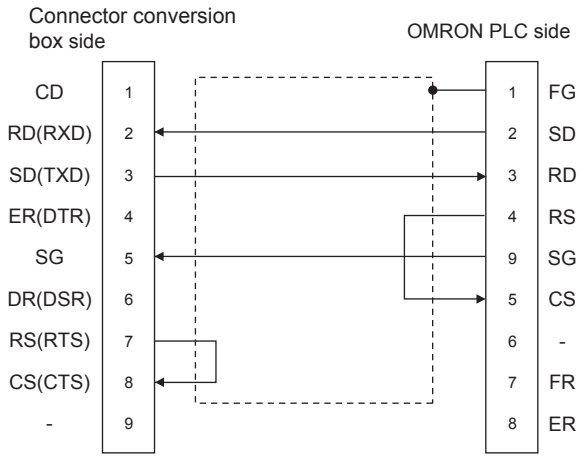

RS232 connection diagram 2)

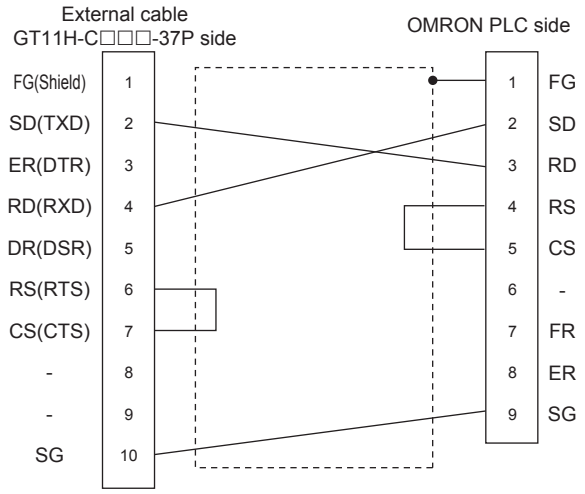

RS232 connection diagram 3)

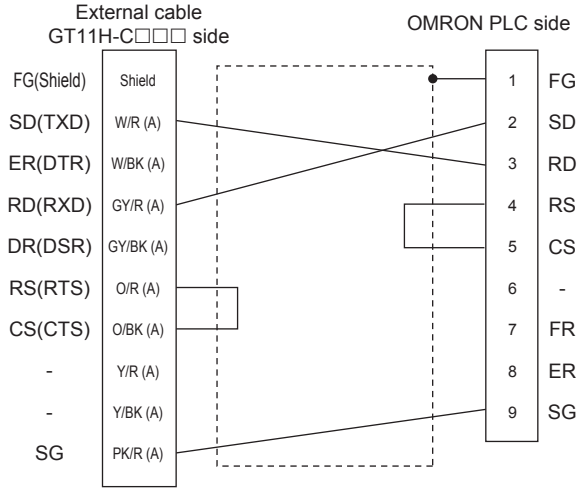

RS232 connection diagram 4)

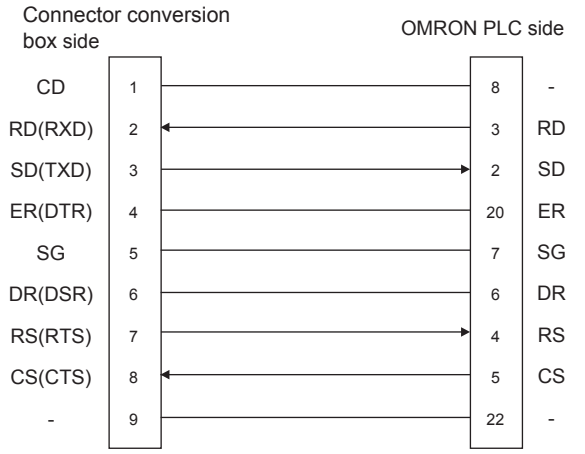

RS232 connection diagram 5)

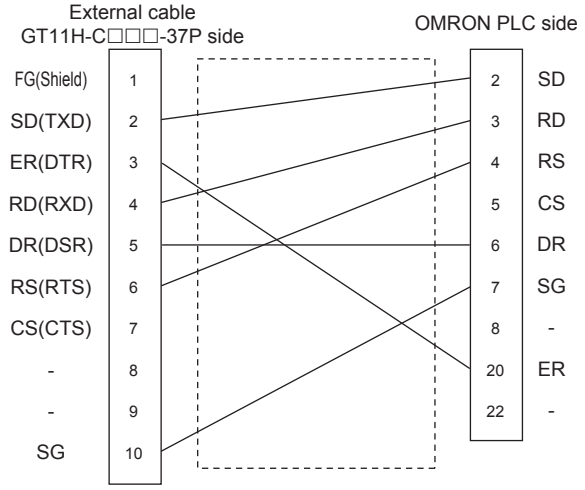

RS232 connection diagram 6)

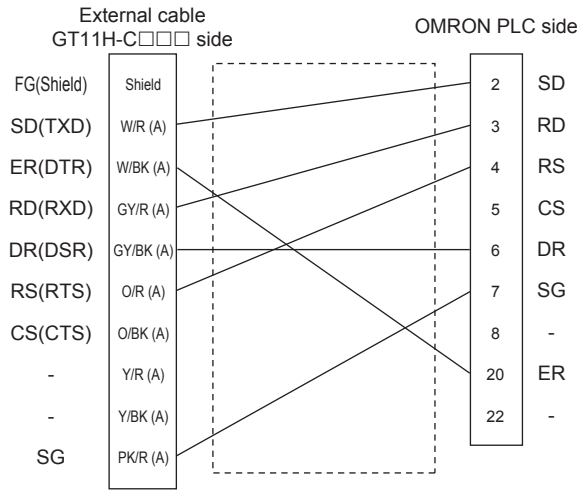

RS232 connection diagram 7)

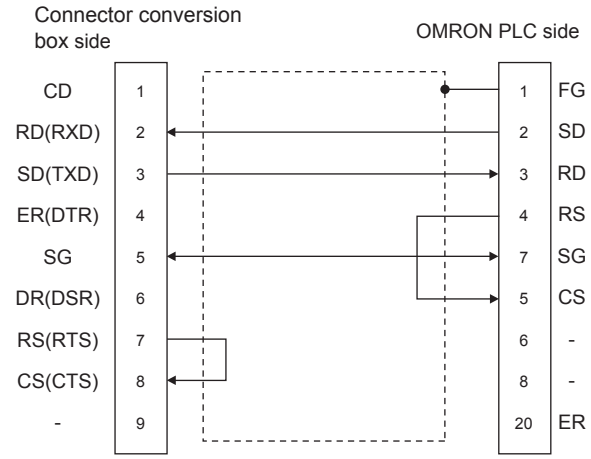

RS232 connection diagram 8)

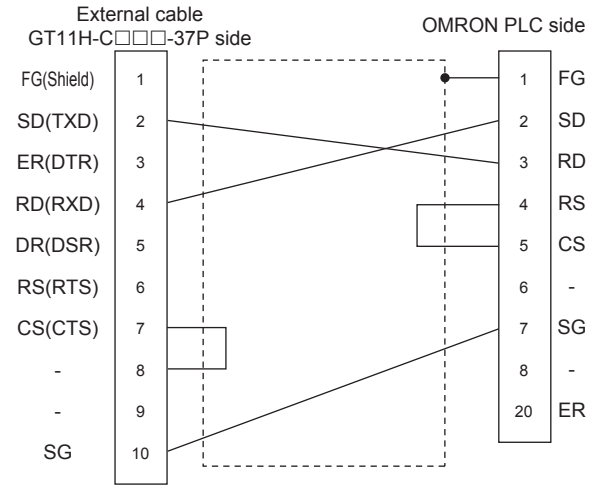

RS232 connection diagram 9)

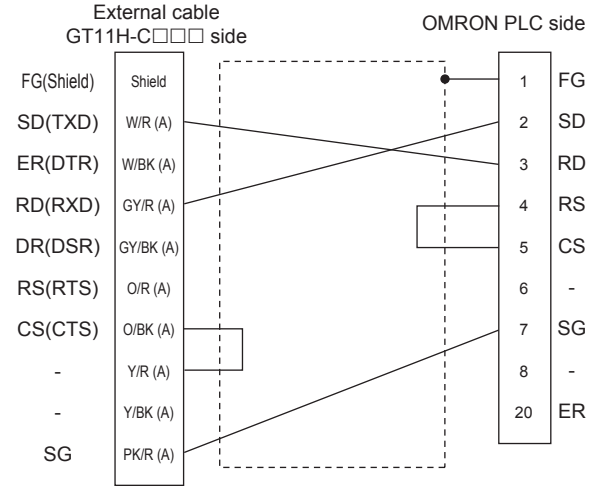

(2) Precautions when preparing a cable

(a) Cable length
The total distance (between GOT and controllers) of RS-232 cable must be 6m or less.

(b) Connector conversion box side connector
For the connector conversion box side connector, refer to the following.

☞ 6.6 Connector Conversion Box

(c) External cable side connector
For the connector specifications of the external cable side, refer to the following.

☞ 8.2 External Cable, Relay Cable

(d) OMRON PLC side connector
Use the connector compatible with the OMRON PLC.
For details, refer to the OMRON PLC user's manual.

■ RS-422 cable

POINT

Differences in polarity between GOT and OMRON PLCs

The polarity of poles A and B in signal names is reversed between GOT and OMRON PLCs.

■ Connect a cable according to the following connection diagrams.

(1) Connection diagram

RS422 connection diagram 1)

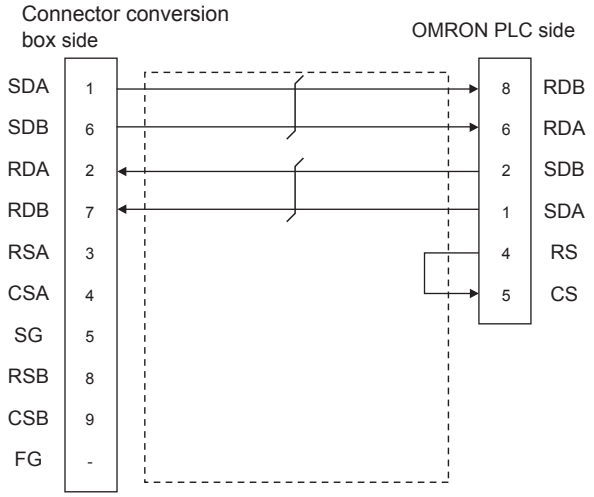

RS422 connection diagram 2)

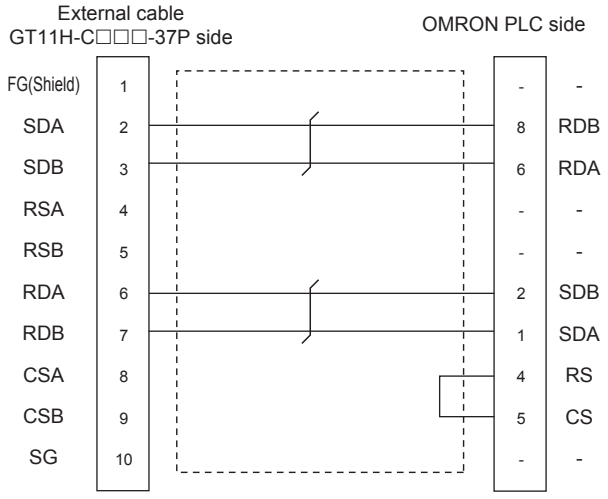

RS422 connection diagram 3)

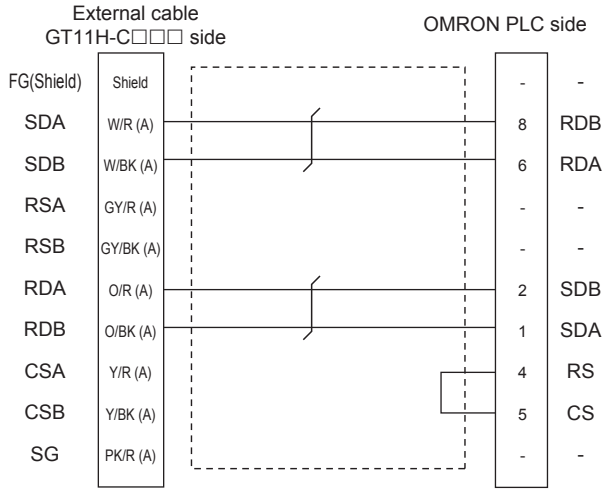

RS422 connection diagram 4)

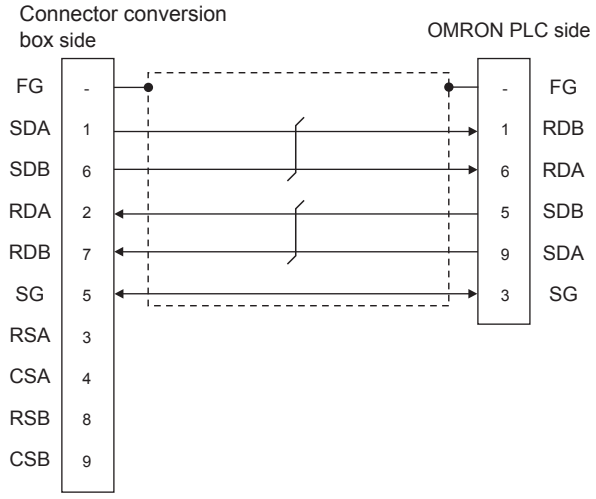

RS422 connection diagram 5)

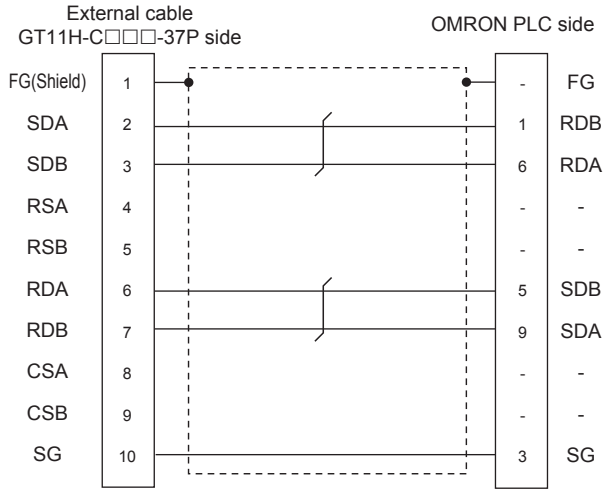

RS422 connection diagram 6)

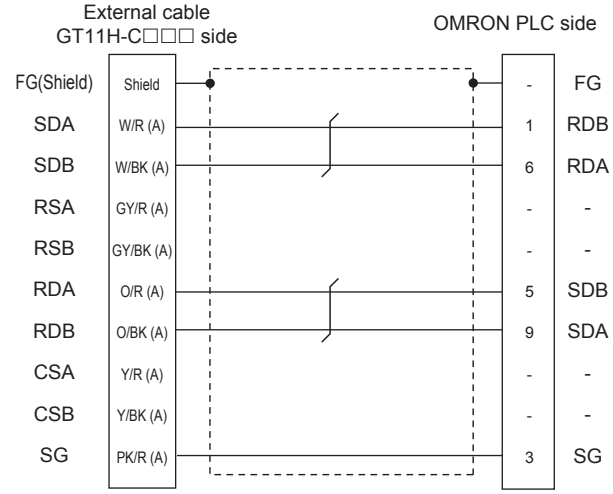

RS422 connection diagram 7)

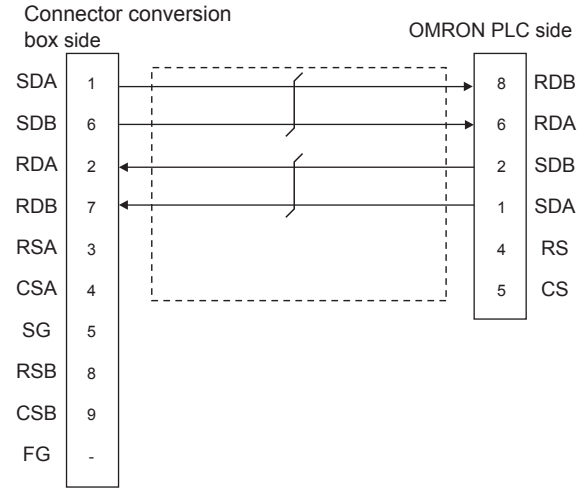

RS422 connection diagram 8)

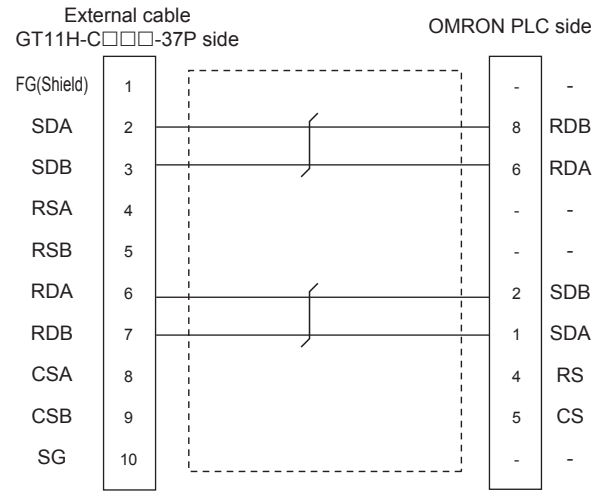

RS422 connection diagram 9)

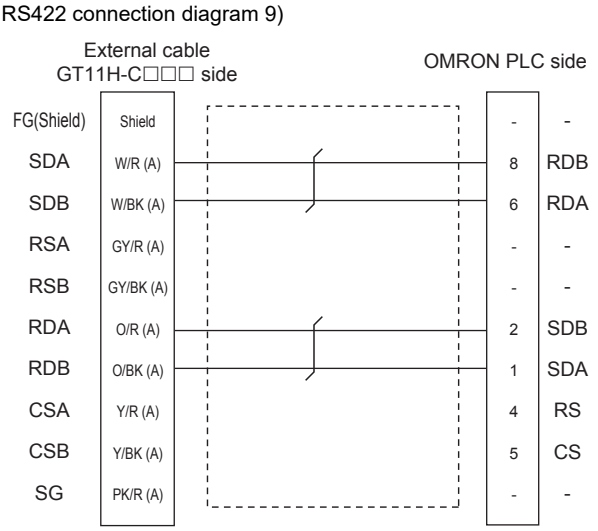

RS422 connection diagram 10)

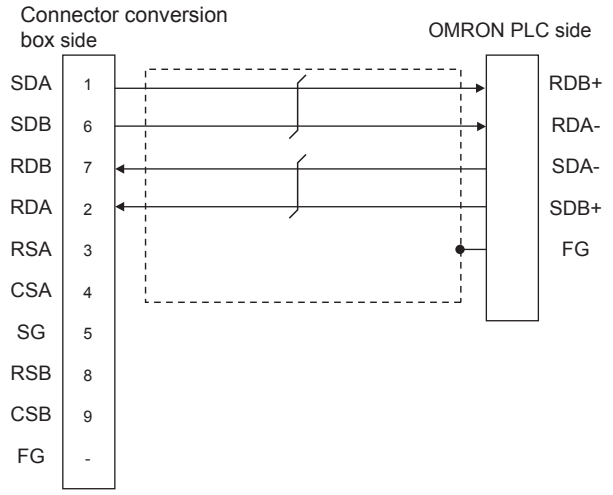

RS422 connection diagram 11)

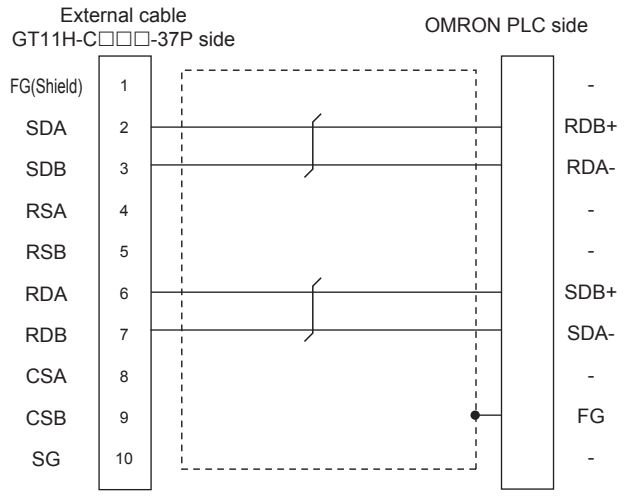

RS422 connection diagram 12)

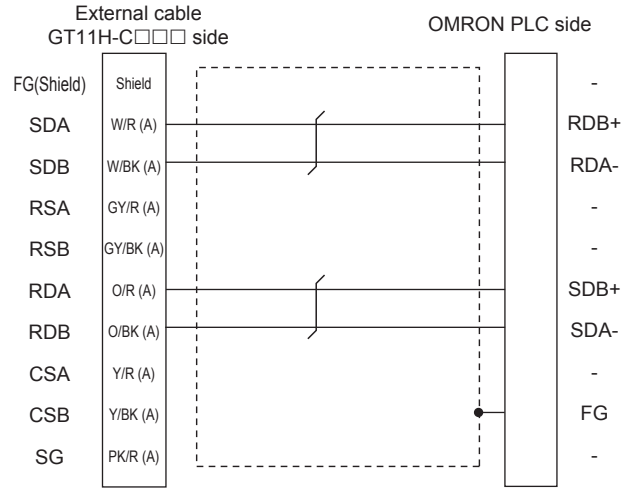

(2) Precautions when preparing a cable

(a) Cable length
The total distance (between GOT and controllers) of RS-422 cable must be 13m or less.

(b) Connector conversion box side connector
For the connector conversion box side connector, refer to the following.

☞ 6.6 Connector Conversion Box

(c) External cable side connector
For the connector specifications of the external cable side, refer to the following.

☞ 8.2 External Cable, Relay Cable

(d) OMRON PLC side connector
Use the connector compatible with the OMRON PLC.
For details, refer to the OMRON PLC user's manual.

(3) Connecting terminating resistors

(a) OMRON PLC side
When connecting an OMRON PLC to a GOT, a terminating resistor must be set to the OMRON PLC.

☞ OMRON PLC user's Manual

33.2.10 GOT side settings

■ Setting communication interface (Communication settings)

Set the channel of the equipment connected to the GOT.

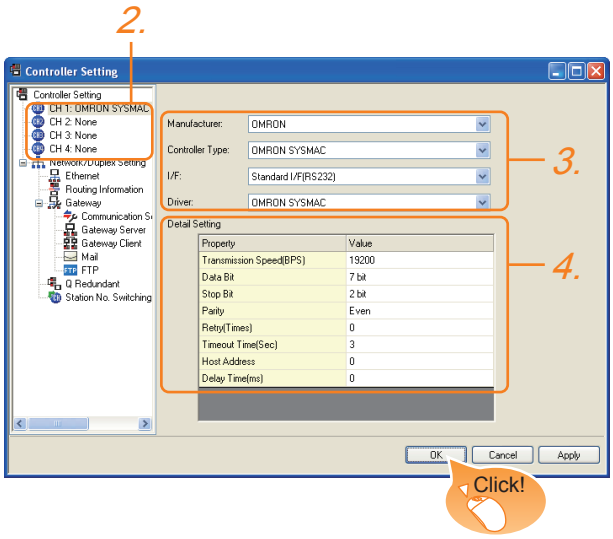

1. Select [Common] → [Controller Setting] from the menu.
2. The Controller Setting window is displayed. Select the channel to be used from the list menu.
3. Set the following items.
   - Manufacturer: OMRON
   - Controller Type: Set according to the Controller Type to be connected.
     - OMRON SYSMAC
     - OMRON SYSMAC CS/CJ
   - I/F: Interface to be used
   - Driver: OMRON SYSMAC
4. The detailed setting is displayed after Manufacturer, Controller Type, I/F, and Driver are set.
   Make the settings according to the usage environment.
   33.2.10 ■ Communication detail settings

Click the OK button when settings are completed.

POINT

The settings of connecting equipment can be confirmed in [I/F Communication Setting].
For details, refer to the following.
18.1.2 I/F communication setting

■ Communication detail settings

Make the settings according to the usage environment.

Item	Description	Range
Transmission Speed	Set this item when change the transmission speed used for communication with the connected equipment. (Default: 19200bps)	4800bps, 9600bps, 19200bps, 38400bps, 57600bps, 115200bps
Data Bit	Set this item when change the data length used for communication with the connected equipment. (Default: 7bits)	7bit (fixed)
Stop Bit	Specify the stop bit length for communications. (Default: 2bits)	2bit (fixed)
Parity	Specify whether or not to perform a parity check, and how it is performed during communication. (Default: Even)	Even (fixed)
Retry	Set the number of retries to be performed when a communication error occurs. (Default: 0time)	0 to 5times
Timeout Time	Set the time period for a communication to time out. (Default: 3sec)	3 to 30sec
Host Address	Specify the host address (station No. of the PLC to which the GOT is connected) in the network of the GOT. (Default: 0)	0 to 31
Delay Time	Set this item to adjust the transmission timing of the communication request from the GOT. (Default: 0ms)	0 to 300 (ms)

POINT

(1) Communication interface setting by Utility
The communication interface setting can be changed on the Utility's [Communication setting] after writing [Communication Settings] of project data.
For details on the Utility, refer to the following manual.
11. COMMUNICATION INTERFACE SETTING (COMMUNICATION SETTING)

(2) Precedence in communication settings
When settings are made by GT Designer3 or the Utility, the latest setting is effective.

33.2.11 PLC side setting

POINT

OMRON PLC

For details of OMRON PLCs, refer to the following manual.

☞ OMRON PLC user's Manual

Model		Refer to
PLC CPU	CPM2A	33.2.12
	CQM1, CQM1H	
	CS1, CJ1, CJ2	33.2.13
	CP1H, CP1L, CP1E	33.2.13
	C200Hα	33.2.12
	CV500, CV1000, CV2000, CVM1	33.2.14
RS-232C adapter	CPM1-CIF01, CPM2C-CIF01-V1	33.2.12
Connection cable	CQM1-CIF01	33.2.15
	CQM1-CIF02	
	CPM2C-CN111	
Rack type host link unit	C200H-LK201-V1	33.2.16
	C200H-LK202-V1	33.2.16
	C500-LK201-V1	33.2.16
Serial communication module	CJ1W-SCU21	33.2.17
	CJ1W-SCU41	
	CJ1W-SCU21-V1	
	CJ1W-SCU41-V1	
	CS1W-SCU21	
	CS1W-SCU21-V1	
Communication board	C200HW-COM02	33.2.18
	C200HW-COM03	
	C200HW-COM05	
	C200HW-COM06	
Serial communication board	CQM1-SCB41	33.2.18
	CS1W-SCB21 CS1W-SCB21-V1	33.2.19
	CS1W-SCB41 CS1W-SCB41-V1	
RS-422A/485 Option board	CP1W-CIF11	33.2.20
	CP1W-CIF12	
RS-422A converter	CJ1W-CIF11	33.2.21

33.2.12 Connecting to CPM2A, CQM1, CQM1H, C200Hα or RS-232C adapter

■ Device settings

Write the following set values to devices of each PLC CPU and initialize each port using a peripheral tool or DM monitor.

Device name	Set value
DM6645	0001H (fixed)
DM6646	b15 to b8: 2) / b7 to b0: 1) 1) RS-232C port transmission speed setting *1*2 02H: 4800bps 03H: 9600bps 04H: 19200bps 2) RS-232C port communication frame format 03H (fixed): The settings are: Start bit : 1 bit Data length: 7 bits Stop bit : 2 bits Parity : Even bits
DM6647	0000 (fixed)
DM6648*3	0000 to 0031
DM6649	0000 (fixed)

*1 Only transmission speeds available on the GOT side are shown.

*2 Set the same transmission speed of the RS-232C port as that of the GOT side.

*3 Set the RS-232C port host link station No. according to the Host Address on the GOT side.

HINT

Precautions for changing device values

Before changing the device values, make sure that the switch settings have been changed as follows:

CPM2A:

The communication condition switch to "individual"

Other PLC CPU:

Front panel DIP switch SW5 to "OFF"

33.2.13 Connecting to CJ1, CJ2, CS1, CP1H, CP1L, or CP1E

■ Setting DIP switches

Set the DIP switches.

(1) Setting on the CJ1, CJ2

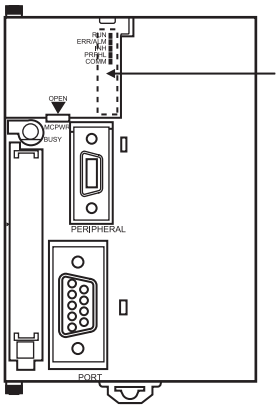

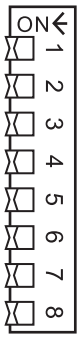

Switch	Description	Setting
SW1	Enable/disable write to user memory (UM)	OFF
SW2	Enable/disable automatic transfer of user program at power ON	OFF
SW3	Free	OFF
SW4	CJ1: Peripheral port communication condition CJ2: Free	OFF
SW5	RS-232C communication condition	OFF
SW6	User customized DIP switch	OFF
SW7	Type specification for simplified backup	OFF
SW8	-	OFF

(2) Setting on the CS1

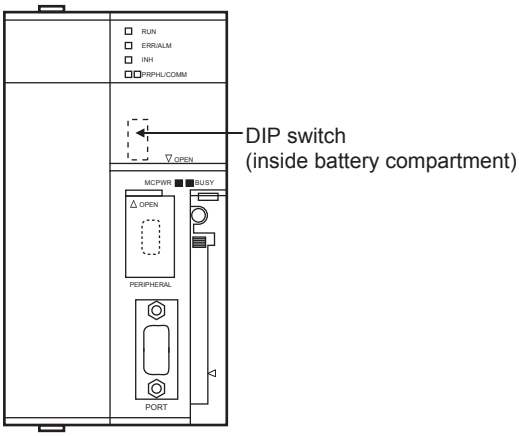

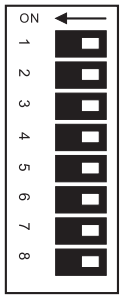

Switch	Description	Setting
SW1	Enable/disable write to user memory (UM)	OFF
SW2	Enable/disable automatic transfer of user program at power ON	OFF
SW3	Programming console message display language (Japanese/English)	OFF
SW4	Peripheral port communication condition	OFF
SW5	RS-232C communication condition	OFF
SW6	User customized DIP switch	OFF
SW7	Type specification for simplified backup	OFF
SW8	-	OFF

(3) Setting on the CP1H, CP1L

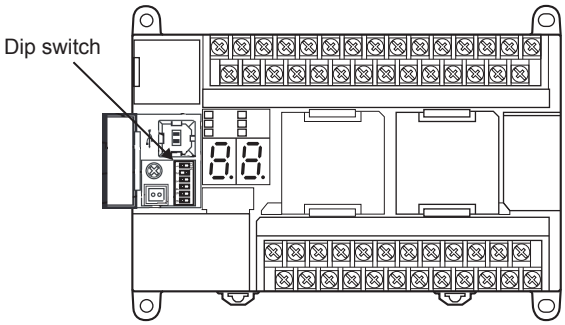

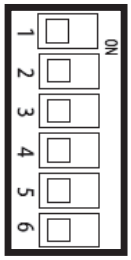

Switch	Description		Setting
SW4	Option Board Slot1	According to PLC Setup.	OFF
SW5	Option Board Slot2		OFF

(4) Setting on the CP1E

Settings by DIP switch are not required.

■ Setting PLC system settings

(1) CJ1, CJ2, CS1

Make the PLC system settings.

Channel	Bit	Item	Set value
160	15	Arbitrary settings ON/OFF	1H: Arbitary settings (fixed)
	8 to 11	Serial communication mode	0H: Upper link (fixed)
	3	Data bit	0H: 7bits (fixed)
	2	Stop bit	0H: 2bits (fixed)
	0 to 1	Parity	0H: Even (fixed)
161	0 to 7	Port transmission speed*1*2	00H: 9600bps 05H: 4800bps 06H: 9600bps 07H: 19200bps 08H: 38400bps 09H: 57600bps 0AH: 115200bps
163	0 to 7	Host link station No.*3	0H to 1FH : No.00 to 31

*1 Only transmission speeds available on the GOT side are shown.
*2 Set the same port transmission speed as that of the GOT side.
*3 Set the host link station No. according to the Host Address on the GOT side.

HINT

Precautions for changing the PLC system settings

Before changing the PLC system settings, make sure that the switch settings have been changed as follows: CJ1, CJ2, CS1: Front panel DIP switch SW5 to "OFF"

(2) CP1H, CP1L, CP1E

Set the PLC system settings of the option slot connected to the GOT.

Item	Set value
Mode	Host link
Parameter	7, 2, E
Transmission speed*1*2	4800bps, 9600bps, 19200bps, 38400bps,57600bps,115200bps
Station No.*3	00 to 31

*1 Only transmission speeds available on the GOT side are shown.
*2 Set the same port transmission speed as that of the GOT side.
*3 Set the host link station No. according to the Host Address on the GOT side.

HINT

Precautions for changing the PLC system settings

Before changing the PLC system settings, check the setting of the front DIP switch corresponding to the option slot used at the time of communication with GOT.

(3)Setting on the CP1H, CP1L

33.2.14 Connecting to CV500/CV1000/ CV2000 or CVM1

■ Setting DIP switches

Set the DIP switches.

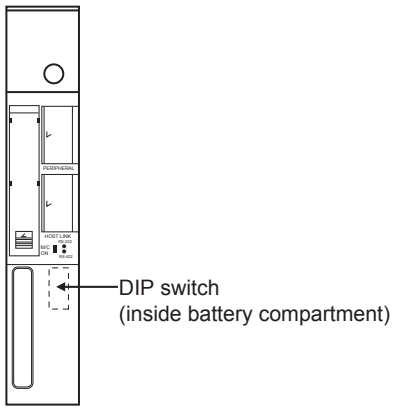

(1) Host link RS-422/232 switch

Setting	
For RS-232 communication	For RS-422 communication
RS-232 (up)	RS-422 (down)

(2) DIP switches

Switch No.	Setting	
	For RS-232 communication	For RS-422 communication
6	OFF (no terminating resistor)	ON (terminating resistor attached)
5	OFF	
4	OFF	
3	OFF	
2	OFF	
1	OFF	

■ Setting PLC system settings

Make the PLC system settings.

Item	Set value
Transmission speed*1*2	4800bps/9600bps/19200bps
Stop Bit	2 stop bits (fixed)
Parity	Even (fixed)
Data Bit	7bits (Fixed)
Station No.*3	00 to 31

*1 Only transmission speeds available on the GOT side are shown.
*2 Set the same transmission speed as that of the GOT side.
*3 Set the station No. according to the Host Address on the GOT side.

33.2.15 Connecting to connection cable

■ Device settings

Write the following set values to devices of each PLC CPU and initialize each port using a peripheral tool or DM monitor.

Device name	Set value
DM6650	0001H (fixed)
DM6651	b15 to b8: 2) / b7 to b0: 1) 1) RS-232C port transmission speed setting*1*2 02H: 4800bps 03H: 9600bps 04H: 19200bps 2) RS-232C port communication frame format 03H (fixed): The settings are: Start bit : 1 bit Data length: 7 bits Stop bit : 2 bits Parity : Even bits
DM6652	0000 (fixed)
DM6653*3	0000 to 0031

*1 Only transmission speeds available on the GOT side are shown.
*2 Set the same transmission speed of the peripheral port as that of the GOT side.
*3 Set the peripheral port host link station No. according to the Host Address on the GOT side.

HINT

Precautions for changing device values

Before changing the device values, make sure that the switch settings have been changed as follows:
CPM2A: The communication condition switch to "individual"
CPM2C: The communication port function switch to "OFF"

33.2.16 Connecting to rack type host link unit

■ Switch setting on C200H-LK201-V1

Set the switches accordingly.

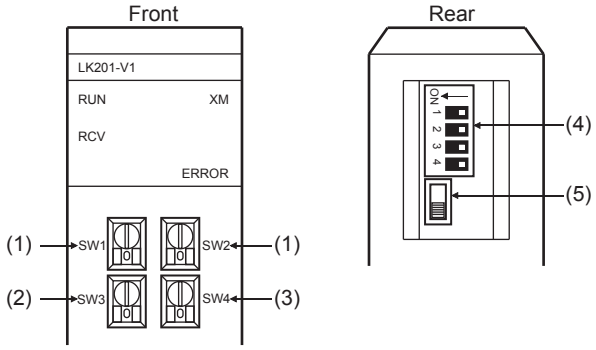

(1) Setting station No. (SW1, SW2)

Set the station No. within the range of 00 to 31.
Set the station No. according to the Host Address on the GOT side.

Rotary switch	Description	Setting
SW1	Station No. upper digit ($\times 10^1$)	0 to 3
SW2	Station No. lower digit ($\times 10^0$)	0 to 9

(2) Setting transmission speed (SW3)

Set the same transmission speed of the GOT.

Setting*1	Set value
4	4800bps
5	9600bps
6	19200bps

*1 Only transmission speeds available on the GOT side are shown.

(3) Setting command level/parity/transmission code (SW4)

Setting	Contents of setting		
	Command level	Parity	Transmission code
2 (fixed)	Levels 1, 2 and 3 are enabled	Even	ASCII 7 bits 2 stop bits

(4) Setting DIP switches

Switch No.	Set value
1	OFF
2	OFF
3	ON (1:N procedure)
4	OFF (no 5V power supply)

(5) Setting the CTS switch

Setting
0V

■ Switch setting on C200H-LK202-V1

Set the switches accordingly.

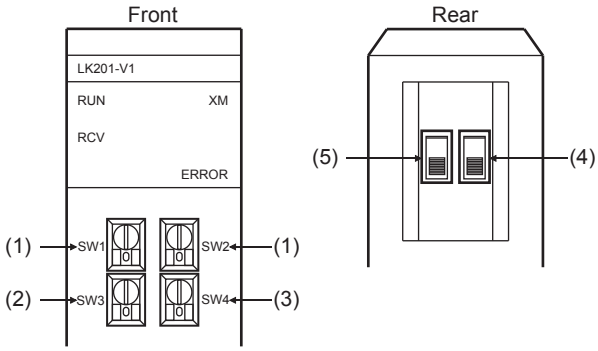

(1) Setting station No. (SW1, SW2)

Set the station No. within the range of 00 to 31.

Set the station No. according to the Host Address on the GOT side.

Rotary switch	Description	Setting
SW1	Station No. upper digit ($\times 10^1$)	0 to 3
SW2	Station No. lower digit ($\times 10^0$)	0 to 9

(2) Setting transmission speed (SW3)

Set the same transmission speed of the GOT.

Setting*1	Set value
4	4800bps
5	9600bps
6	19200bps

*1 Only transmission speeds available on the GOT side are shown.

(3) Setting command level/parity/transmission code (SW4)

Setting	Contents of setting		
	Command level	Parity	Transmission code
2 (fixed)	Levels 1, 2 and 3 are enabled	Even	ASCII 7 bits 2 stop bits

(4) Setting the 1:1/1:N procedure switch

Setting
OFF (1:N procedure)

(5) Setting the terminating resistor connection switch

Setting
ON (terminating resistor attached)

■ Switch setting on C500-LK201-V1

Set the switches accordingly.

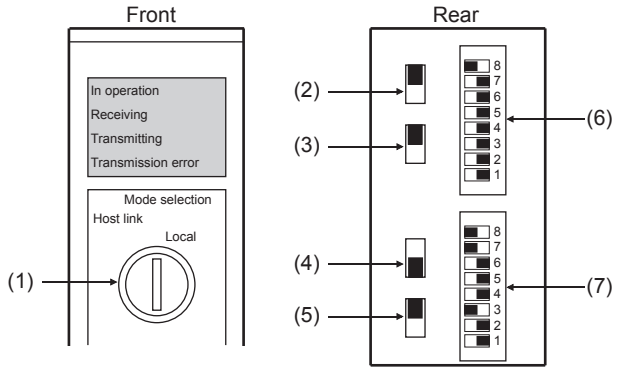

(1) Setting host link/local

Setting
Host link

(2) RS-232C/RS-422 switch

Setting	
For RS-232 communication	For RS-422 communication
RS-232 (down)	RS-422 (up)

(3) Internal/external clock switch

Setting
Internal (up)

(4) Terminating resistor connection switch

Setting
Attached (down)

(5) CTS switch

Setting
0V (up)

(6) Setting SW1 (Station No., Run/Stop)

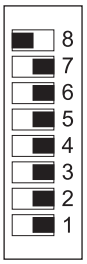

Switch No.	Setting	Description
8	ON	Run
7	OFF	-
6	OFF	-
5	Set the station No. within the range of 00 to 31. For details, refer to the following manual. User's Manual for the OMRON PLC	
4		
3		
2		
1		

(7) Setting SW2 (Transmission speed, Procedure, Level)

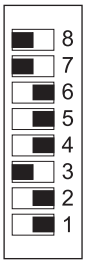

Switch No.	Setting	Description
8	ON	Levels 1, 2 and 3 are enabled
7	ON	
6	OFF	1:N procedure
5	OFF	-
4	*1	Transmission speed
3		
2		
1		

*1 Only transmission speeds available on the GOT side are shown.

Transmission speed	Switch No.			
	SW1	SW2	SW3	SW4
4800bps	OFF	ON	ON	OFF
9600bps	ON	OFF	ON	OFF
19200bps	OFF	OFF	ON	OFF

33.2.17 Connecting to serial communication unit

■ Device settings

Write the following set values to devices of each PLC CPU and initialize each port using a peripheral tool or DM monitor.

Device name		Set value
Port 1	Port 2	
DM (m)	DM (m+10)	8000H (fixed): The settings are: Port setting: Arbitrary setting Serial communication mode: Host link Start bit: 1bit Data bit: 7bits Stop bit: 2bits Parity: Even
DM (m+1)	DM (m+11)	b15 to b8 / b7 to b0 0H / 1) 1) Transmission speed*1*2 00H: 9600bps, 08H: 38400bps 05H: 4800bps, 09H: 57600bps 06H: 9600bps, 0AH: 115200bps 07H: 19200bps
DM (m+2)	DM (m+12)	8000H (fixed)
DM (m+3)*3	DM (m+13)*3	8000H to 801FH

m = 30000 + (100 × unit No.)

*1 Only transmission speeds available on the GOT side are shown.

*2 Set the same transmission speed as that of the GOT side.

*3 Set the host link station No. according to the Host Address setting on the GOT side.

33.2.18 Connecting to communication board, serial communication board (CQM1-SCB41)

■ Device settings

Write the following set values to devices of each PLC CPU and initialize each port using a peripheral tool or DM monitor.

Device name		Set value
Port B	Port A	
DM6550	DM6555	0001H (fixed)
DM6551	DM6556	b15 to b8 / b7 to b0 2) / 1) 1) Transmission speed*1*2 02H:4800bps 03H:9600bps 04H:19200bps 2) Frame format setting 03H (fixed): The settings are: Start bit :1 bit Data length:7 bits Stop bit :2 bits Parity :Even bits
DM6552	DM6557	0000H (fixed)
DM6553*3	DM6558*3	0000H to 0031H

*1 Only transmission speeds available on the GOT side are shown.

*2 Set the same transmission speed as that of the GOT side.

*3 Set the host link station No. according to the Host Address setting on the GOT side.

■ Setting DIP switches (C200HW-COM3 and C200HW-COM6 only)

Set the DIP switches when performing the RS-422 communications on the C200HW-COM3 and C200HW-COM6.

C200HW-COM3

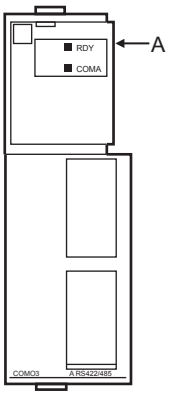

C200HW-COM6

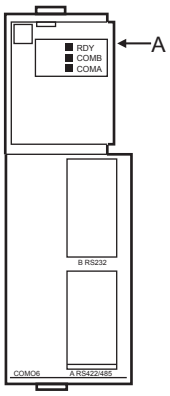

Side view indicated by A

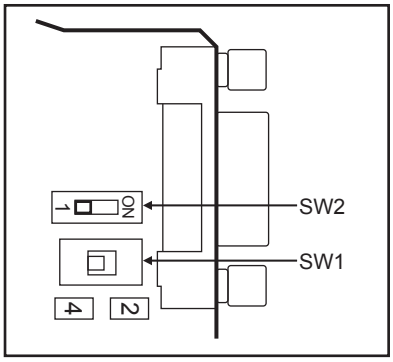

DIP switches		Set value
No.	Item	
SW1	RS-422/485 cable (2-wire/4-wire type) switching	4 (4-wire type)
SW2	Terminator ON/OFF	1 (no terminating resistor attached)

33.2.19 Connecting to serial communication board (CS1W-SCB21(-V1), CS1W-SCB41(-V1))

■ Device settings

Write the following set values to devices of each PLC CPU and initialize each port using a peripheral tool or DM monitor.

Device name		Set value
Port 1	Port 2	
D32000	D32010	8000H (fixed) The settings are: Port setting: Arbitrary setting Serial communication mode: Host link Start bit: 1bit Data bit: 7bits Stop bit: 2bits Parity: Even
D32001	D32011	b15 to b8 | b7 to b0 0H | 1) 1) Transmission speed*1*2 00H: 9600bps 08H: 38400bps 05H: 4800bps 09H: 57600bps 06H: 9600bps 0AH: 115200bps 07H: 19200bps
D32002	D32012	8000H (fixed)
D32003*3	D32013*3	0000H to 0001FH

*1 Only transmission speeds available on the GOT side are shown.
*2 Set the same transmission speed as that of the GOT side.
*3 Set the host link station No. according to the Host Address setting on the GOT side.

■ Setting the DIP switches (CS1W-SCB41(-V1) only)

Set the DIP switches when performing the RS-422 communications on the CS1W-SCB41(-V1).

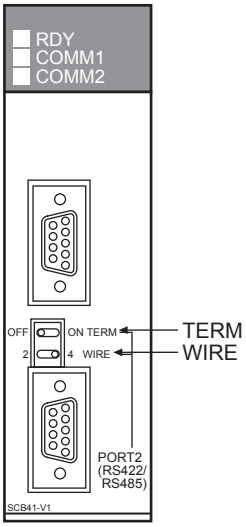

DIP switches		Set value
Name	Item	
WIRE	2-wire/4-wire type switch	4 (4-wire type)
TERM	Terminator ON/OFF switch	OFF (no terminating resistor)

HINT

Precautions for changing the DM area

Before changing the DM area, make sure that the switch setting has been changed as follows

CS1: Front panel DIP switch SW5 to "OFF"

33.2.20 Connecting to RS-422A/485 Option board

■ Setting DIP switches

Set the DIP switches

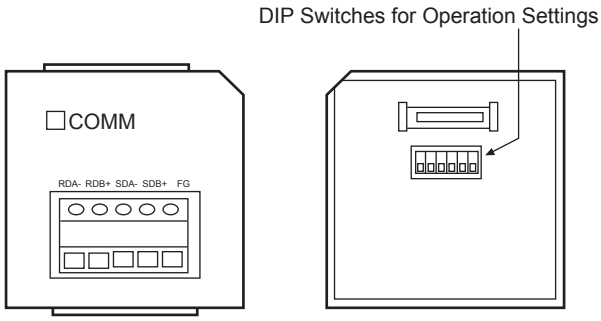

Switch No.	Setting	Description	
1	ON	Enable	Terminating resistance selection
2	OFF	4-wire type	2-wire or 4-wire selection
3	OFF	4-wire type	2-wire or 4-wire selection
5	ON	RS control enabled	RS control selection for RD
6	ON	RS control enabled	RS control selection for SD

33.2.21 Connecting to RS-422A converter

■ Setting DIP switches

Set the DIP switches.

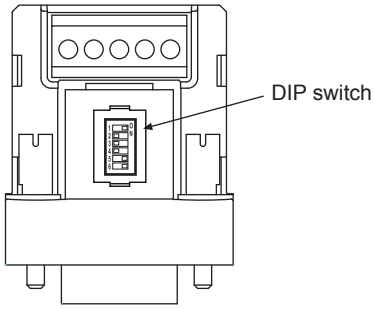

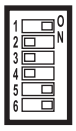

Switch No.	Setting	Description	
1	ON	Enable	Terminating resistance selection
2	OFF	4-wire type	2-wire or 4-wire selection
3	OFF	4-wire type	2-wire or 4-wire selection
5	ON	RS control enabled	RS control selection for RD
6	ON	RS control enabled	RS control selection for SD

33.3 Ethernet Connection

33.3.1 System configuration

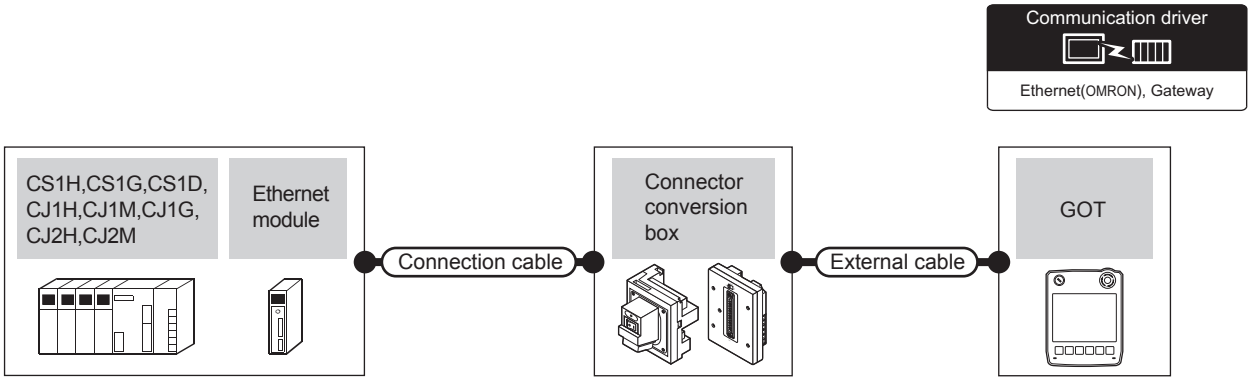

PLC		Connection cable*1	Connector conversion box	External cable*6	GOT model	Maximum segment length	Number of connectable equipment
Series	Ethernet module*3	Cable model					
CS1H CS1G CS1D	CS1W-ETN21	• 10BASE-T Shielded twisted pair cable (STP) or Unshielded twisted pair cable (UTP) Category 3, 4, and 5 • 100BASE-TX Shielded twisted pair cable (STP) Category 5 and 5e	GT16H-CNB-42S	GT14H-C30-42P(3m) GT14H-C60-42P(6m) GT14H-C100-42P(10m)	GT14 Handy	100m*2	When PLC:GOT is N:1 The following shows the number of PLCs for 1 GOT TCP: 128 or less UDP: 128 or less When PLC:GOT is 1:N The following shows the number of GOTs for 1 PLC TCP: 16 or less*4 UDP: No limit number*5
			GT16H-CNB-37S	GT11H-C30-37P(3m) GT11H-C60-37P(6m) GT11H-C100-37P(10m)			
CS1D	CS1D-ETN21D		GT16H-CNB-42S	GT14H-C30-42P(3m) GT14H-C60-42P(6m) GT14H-C100-42P(10m)			
			GT16H-CNB-37S	GT11H-C30-37P(3m) GT11H-C60-37P(6m) GT11H-C100-37P(10m)			
CJ1H CJ1M CJ1G	CJ1W-ETN21		GT16H-CNB-42S	GT14H-C30-42P(3m) GT14H-C60-42P(6m) GT14H-C100-42P(10m)			
			GT16H-CNB-37S	GT11H-C30-37P(3m) GT11H-C60-37P(6m) GT11H-C100-37P(10m)			
CJ2H CJ2M-CPU3□	-		GT16H-CNB-42S	GT14H-C30-42P(3m) GT14H-C60-42P(6m) GT14H-C100-42P(10m)			
			GT16H-CNB-37S	GT11H-C30-37P(3m) GT11H-C60-37P(6m) GT11H-C100-37P(10m)			
CJ2H CJ2M-CPU1□	CJ1W-ETN21		GT16H-CNB-42S	GT14H-C30-42P(3m) GT14H-C60-42P(6m) GT14H-C100-42P(10m)			
			GT16H-CNB-37S	GT11H-C30-37P(3m) GT11H-C60-37P(6m) GT11H-C100-37P(10m)			

*1 The destination connected with the twisted pair cable varies with the configuration of the applicable Ethernet network system.
Connect to the Ethernet module, hub, transceiver or other system equipment corresponding to the applicable Ethernet network system.
Use cables, connectors, and hubs that meet the IEEE802.3 10BASE-T/100BASE-TX standard.
The use of shielded twisted pair cable (STP) is recommended in environments in which the performance against noise is required.

*2 A length between a hub and a node.
The maximum distance differs depending on the Ethernet device to be used.
The following shows the number of the connectable nodes when a repeater hub is used.
- 10BASE-T: Max. 4 nodes for a cascade connection (500m)
- 100BASE-TX: Max. 2 nodes for a cascade connection (205m)

When switching hubs are used, the cascade connection between the switching hubs has no logical limit for the number of cascades.
For the limit, contact the switching hub manufacturer.

*3 Product manufactured by OMRON Corporation. For details on the product, contact OMRON Corporation.
*4 If it is connected to devices other than the GOT using the connection, the number of connectable GOTs decreases. For details, refer to the OMRON PLC user's manual.
*5 There is no restriction for the number of GOTs. However, if the number of GOTs increases, the communication becomes high-loaded, and it may affect the communication performance.
*6 Use C or later version of GT11H-C□□-37P.

33.3.2 GOT side settings

■ Setting communication interface (Communication settings)

Set the channel of the connected equipment.

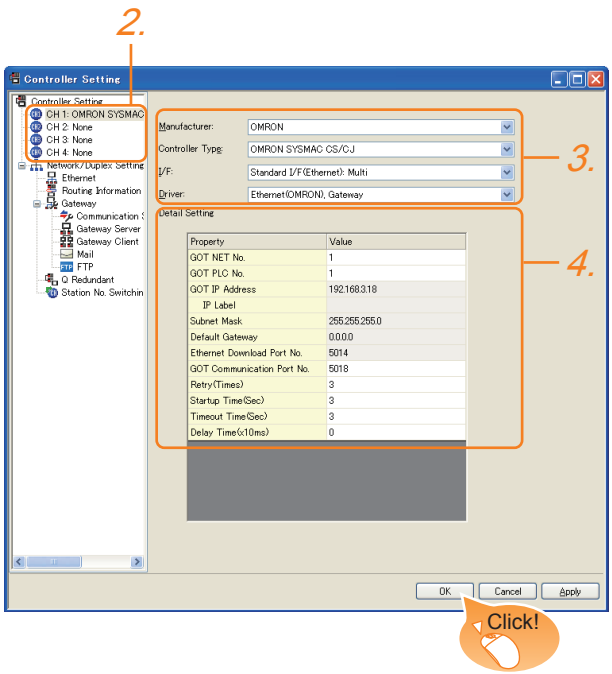

1. Select [Common] → [Controller Setting] from the menu.
2. The Controller Setting window is displayed. Select the channel to be used from the list menu.
3. Set the following items.
   - Manufacturer: OMRON
   - Controller Type: OMRON SYSMAC CS/CJ
   - I/F: Interface to be used
   - Driver: Ethernet (OMRON), Gateway
4. The detailed setting is displayed after Manufacturer, Controller Type, I/F, and Driver are set.
   Make the settings according to the usage environment.
   33.3.2 ■ Communication detail settings

Click the OK button when settings are completed.

POINT

The settings of connecting equipment can be confirmed in [I/F Communication Setting].
For details, refer to the following.
18.1.2 I/F communication setting

■ Communication detail settings

Make the settings according to the usage environment.

Item	Description	Range
GOT NET No.	Set the network No. of the GOT. (Default: 1)	1 to 127
GOT PLC No.*3	Set the station No. of the GOT. (Default: 1)	1 to 254
GOT IP Address*1	Set the IP address of the GOT. (Default: 192.168.3.18)	0.0.0.0 to 255.255.255.255
Subnet Mask*1	Set the subnet mask for the sub network. (Only for connection via router) If the sub network is not used, the default value is set. (Default: 255.255.255.0)	0.0.0.0 to 255.255.255.255
Default Gateway*1	Set the router address of the default gateway where the GOT is connected. (Only for connection via router) (Default: 0.0.0.0)	0.0.0.0 to 255.255.255.255
Ethernet Download Port No.*1	Set the GOT port No. for Ethernet download. (Default: 5014)	1024 to 5010, 5014 to 65534 (Except for 5011, 5012, 5013, and 49153)
GOT Communication Port No.*2	Set the GOT port No. for the connection with the Ethernet module. (Default: 5018)	1024 to 5010, 5015 to 65534 (Except for 5011, 5012, 5013, and 49153)
Retry	Set the number of retries to be performed when a communication timeout occurs. When receiving no response after retries, the communication times out. (Default: 3times)	0 to 5times
Startup Time	Specify the time period from the GOT startup until GOT starts the communication with the PLC CPU. (Default: 3sec)	3 to 255 sec
Timeout Time	Set the time period for a communication to time out. (Default: 3sec)	3 to 90sec
Delay Time	Set the delay time for reducing the load of the network/destination PLC. (Default: 0ms)	0 to 10000 (× 10 ms)

*1 Click the Setting button and perform the setting in the [GOT IP Address Setting] screen.

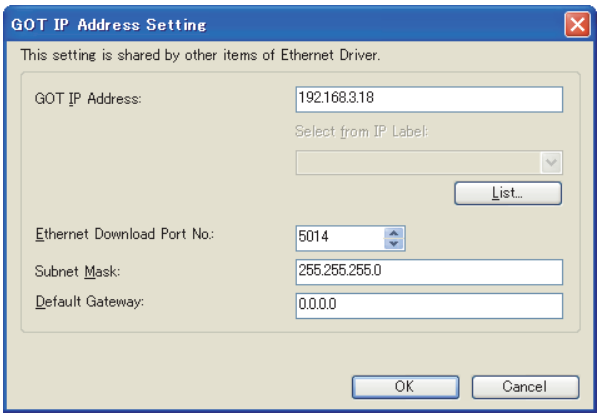

*2 If the [IP address conversion method] for the OMRON PLC setting is other than [Automatic conversion method (dynamic)], set the same [GOT Communication Port No.] setting as that of [FINS UDP Port] of CX-Programmer.

*3 Each of [GOT PLC No.] set in the communication detail setting and [PLC No.] set in the Ethernet setting must be set to different station numbers.
33.3.2 ■ Ethernet setting

■ Ethernet setting

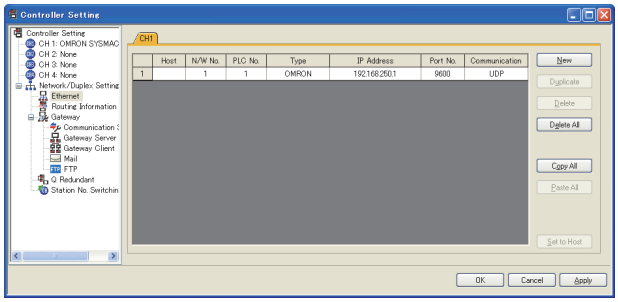

Item	Description	Set value
Host	The host is displayed. (The host is indicated with an asterisk (*).)	-
N/W No.	Set the network No. of the connected Ethernet module. (Default: blank)	1 to 127
PLC No.*1	Set the station No. of the connected Ethernet module. (Default: blank)	1 to 254
Type	OMRON (fixed)	OMRON (fixed)
IP Address	Set the IP address of the connected Ethernet module. (Default: blank)	PLC side IP address
Port No.	Set the port No. of the connected Ethernet module. (Default: 9600)	256 to 65534
Communication	Select a communication protocol. (Default: UDP)	UDP, TCP

*1 Each of [GOT PLC No.] set in the communication detail setting and [PLC No.] set in the Ethernet setting must be set to different station numbers.

33.3.2 ■ Communication detail settings

POINT

(1) Communication interface setting by Utility
The communication interface setting can be changed on the Utility's [Communication setting] after writing [Communication Settings] of project data.
For details on the Utility, refer to the following manual.

11. COMMUNICATION INTERFACE SETTING (COMMUNICATION SETTING)

(2) Precedence in communication settings
When settings are made by GT Designer3 or the Utility, the latest setting is effective.

33.3.3 PLC side setting

POINT

OMRON PLC

For the communication between OMRON PLC and GOT, use the FINS communication.
For the FINS communication, the node must be specified according to the realm of FINS. However, for the Ethernet network, the data transfer according to the IP address is required.

- Automatic conversion method (dynamic)
- Automatic conversion method (static)
- IP address table conversion method
- Combined method

The following four methods are available for converting the FINS node address to the IP address.
For details of OMRON PLCs, refer to the following manual.

OMRON PLC user's Manual

■ Communication settings

For the PLC communication setting, set with a software for programming apparatus (CX-Programmer Ver.3.20 or later).

(1) CX-Programmer setting

Item		Setting range			
		Automatic conversion method (dynamic)	Automatic coversion method (static)*4*5	IP address table method*4*6	Combined method*4*6
Ethernet module CPU highly-functional module	Global	All 1 (Default)	All 1 (Default)	All 1 (Default)	All 1 (Default)
	IP Address*1	[192]. [168]. [0]. [1]*3	[192]. [168]. [0]. [1]*3	[192]. [168]. [0]. [1]	[192]. [168]. [0]. [1]
	Subnet Mask	[255]. [255]. [255]. [0]	[255]. [255]. [255]. [0]	[255]. [255]. [255]. [0]	[255]. [255]. [255]. [0]
	FINS UDP port*1	9600	9600	9600	9600
	IP address conversion	Automatic conversion method (dynamic)	Automatic conversion method (static)	IP address table method	Combined method
	IP address table	-	-	10 [192]. [168]. [0]. [1] 11 [192]. [168]. [0]. [18]	10 [192]. [168]. [0]. [1]
	Transmission speed	Automatic detection (Default)	Automatic detection (Default)	Automatic detection (Default)	Automatic detection (Default)
	Node IP Address dynamically change*2	Change dynamically (Default)	Change dynamically (Default)	Change dynamically (Default)	Change dynamically (Default)

*1 Set the same [IP address] and [FINS UDP Port] settings as that of [IP address] and [Port No.] of the GT Designer3 Ethernet setting.

*2 The Node IP Address dynamically change function is available only when the Ethernet module to be used is Ver.1.3 or later.
For the setting, set in the module setting of CX-Programmer Ver.5.0 or later or in the WEB function.
For details of Node IP Address dynamically change, refer to the following manual.

OMRON PLC user's Manual

*3 Set the same lowermost bit of the [IP address] setting as that of the node setting switch of the module.

*4 Set the same [GOT Port No. (Communication)] In Communication detail settings as that of [Port No.] of the Ethernet setting.

*5 Set the same lowermost bit of the [GOT IP address] in Communication detail settings as that of [GOT PLC No.].

*6 Set the same lowermost bit of the [GOT IP address] and [GOT PLC No.] in Communication detail settings of GT Designer3 as that of [IP address table].

33.3.4 Precautions

■ When connecting to multiple GOTs

(1) Setting PLC No.
When connecting two or more GOTs in the Ethernet network, set each [PLC No.] to the GOT.

☞ 33.3.2 ■ Ethernet setting

(2) Setting IP address
Do not use the IP address "192.168.0.18" when using multiple GOTs.
A communication error may occur on the GOT with the IP address.

■ When setting IP address

Do not use "0" and "255" at the end of an IP address.
(Numbers of *.*.*.0 and *.*.*.255 are used by the system)
The GOT may not monitor the controller correctly with the above numbers.
Consult with the administrator of the network before setting an IP address to the GOT and controller.

■ When connecting to the multiple network equipment (including GOT) in a segment

By increasing the network load, the transmission speed between the GOT and PLC may be reduced.
The following actions may improve the communication performance.

- Using a switching hub
- More high speed by 100BASE-TX (100Mbps)
- Reduction of the monitoring points on GOT

33.4 Device Range that Can Be Set

For details on the device range of controllers that can be used on GT14 Handy, refer to the following manuals.

☞ GT Designer3 Version1 Screen Design Manual(Fundamentals)

☞ GOT1000 Series Connection Manual (Non-Mitsubishi Products 1) for GT Works3

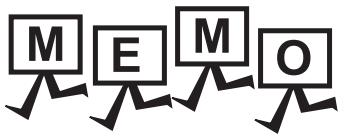
MEMO

34. CONNECTION TO OMRON TEMPERATURE CONTROLLER

34.1 Connectable Model List

The following table shows the connectable models.

Series	Model	Communication type	GT14 Handy	Refer to
THERMAC NEO	E5AN, E5EN E5CN, E5GN	RS-232	○	34.2.1
INPANEL NEO	E5ZN	RS-232	○	34.2.2

34.2 System Configuration

34.2.1 Connecting to the THERMAC NEO series

■ When connecting to one temperature controller

(1) When using the connector conversion box

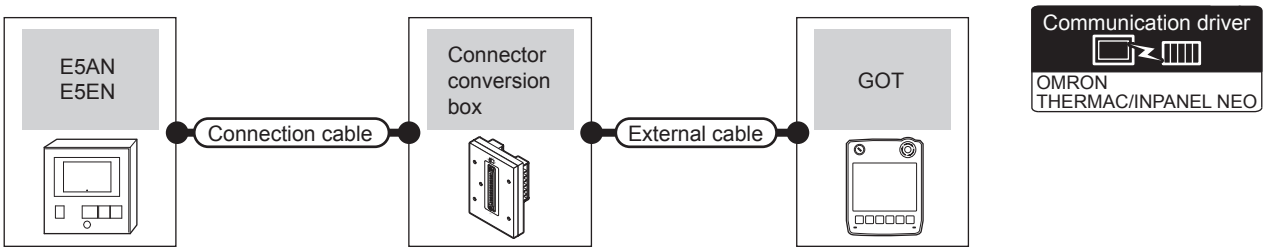

Temperature controller		Connection cable	Connector conversion box	External cable	GOT model	Total distance	Number of connectable equipment
Model	Communication type	Cable model Connection diagram number					
E5AN E5EN	RS-232	User preparing RS232 connection diagram 1)	GT11H-CNB-37S	GT11H-C30-37P (3m)	GT14 Handy	6m	1 temperature controller for 1 GOT

(2) When using the external cable (GT11H-C□□□-37P)

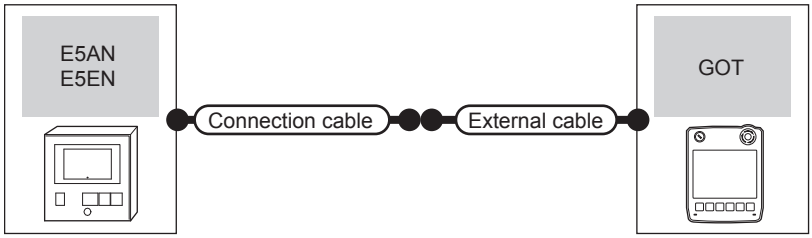

Temperature controller		Connection cable	External cable	GOT model	Total distance	Number of connectable equipment
Model	Communication type	Cable model Connection diagram number				
E5AN E5EN	RS-232	User preparing RS232 connection diagram 2)	GT11H-C30-37P (3m)	GT14 Handy	6m	1 temperature controller for 1 GOT

(3) When using the external cable (GT11H-C□□□)

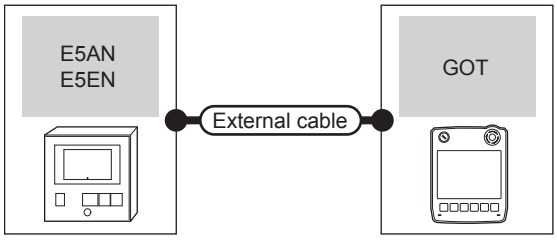

Temperature controller		External cable	GOT model	Total distance	Number of connectable equipment
Model	Communication type				
E5AN E5EN	RS-232	GT11H-C30 (3m) GT11H-C60 (6m) User preparing RS232 connection diagram 2)	GT14 Handy	6m	1 temperature controller for 1 GOT

■ When connecting to multiple temperature controllers (via an interface converter)

(1) When using the connector conversion box

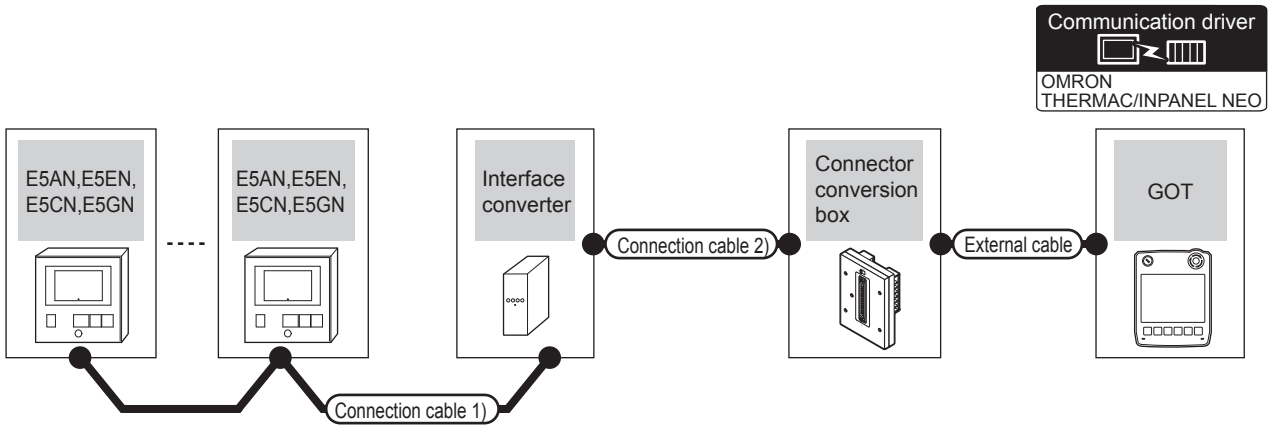

Temperature controller	Connection cable 1)		Interface converter*1		Connection cable 2)	Connector conversion box	External cable	GOT model	Total distance *2	Number of connectable equipment
Model	Cable model Connection diagram number	Max. distance	Model	Communication type	Cable model Connection diagram number					
E5AN E5EN E5CN E5GN	User preparing RS485 connection diagram 1)	500m	K3SC-10	RS-232	User preparing RS232 connection diagram 4)	GT11H-CNB-37S	GT11H-C30-37P (3m)	GT14 Handy	6m	32 temperature controllers for 1 GOT

*1 The interface converter is a product manufactured by OMRON Corporation. For details on the product, contact OMRON Corporation.

*2 The distance from the GOT to the interface converter (Connection cable 2) + External cable)

(2) When using the external cable (GT11H-C□□□-37P)

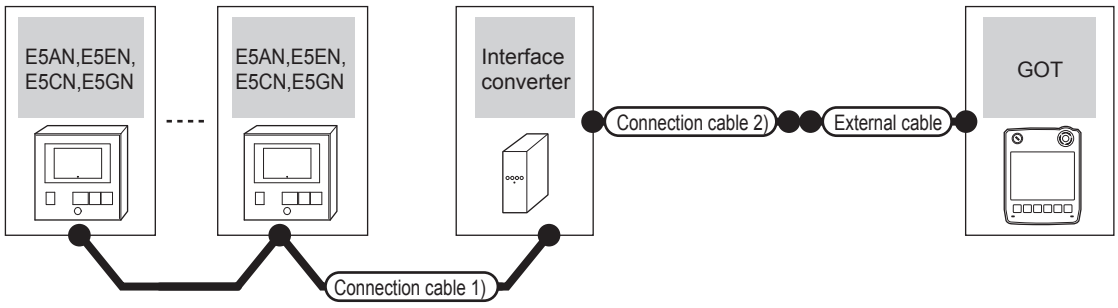

Temperature controller	Connection cable 1)		Interface converter*1		Connection cable 2)	External cable	GOT model	Total distance *2	Number of connectable equipment
Model	Cable model Connection diagram number	Max. distance	Model	Communication type	Cable model Connection diagram number				
E5AN E5EN E5CN E5GN	User preparing RS485 connection diagram 1)	500m	K3SC-10	RS-232	User preparing RS232 connection diagram 5)	GT11H-C30-37P (3m)	GT14 Handy	6m	32 temperature controllers for 1 GOT

*1 The interface converter is a product manufactured by OMRON Corporation. For details on the product, contact OMRON Corporation.

*2 The distance from the GOT to the interface converter (Connection cable 2) + External cable)

(3) When using the external cable (GT11H-C□□□)

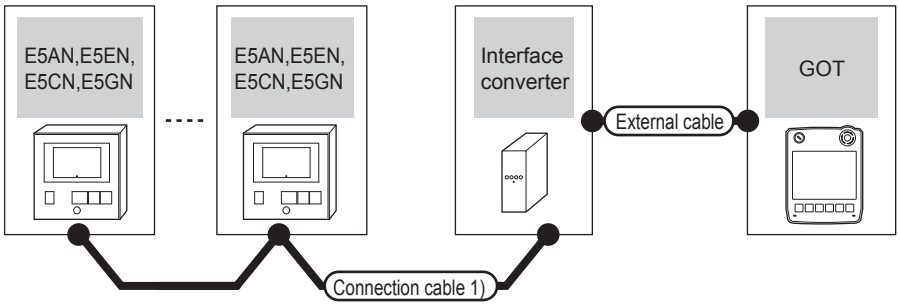

Temperature controller	Connection cable 1)		Interface converter*1		External cable	GOT model	Total distance *2	Number of connectable equipment
Model	Cable model Connection diagram number	Max. distance	Model	Communication type				
E5AN E5EN E5CN E5GN	User preparing RS485 connection diagram 1)	500m	K3SC-10	RS-232	GT11H-C30 (3m) GT11H-C60 (6m) User preparing RS232 connection diagram 6)	GT14 Handy	6m	32 temperature controllers for 1 GOT

*1 The interface converter is a product manufactured by OMRON Corporation. For details on the product, contact OMRON Corporation.

*2 The distance from the GOT to the interface converter (Connection cable 2) + External cable)

34.2.2 Connecting to the INPANEL NEO

Communication driver
OMRON THERMAC/INPANEL NEO

(1) When using the connector conversion box

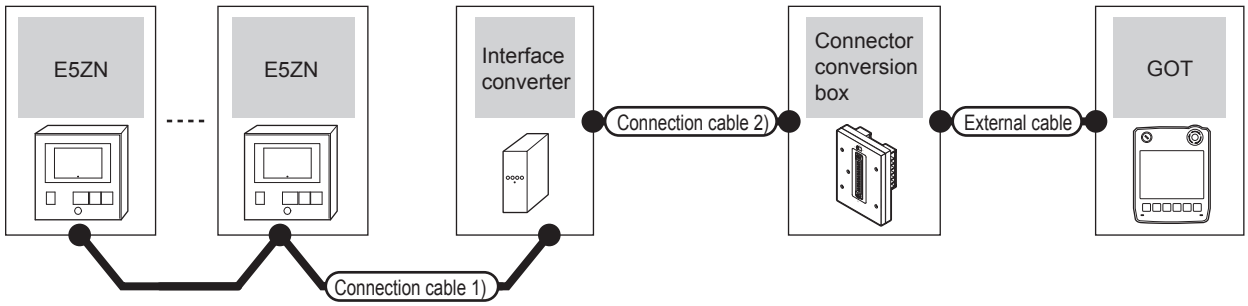

Temperature controller	Connection cable 1)		Interface converter*1		Connection cable 2)	Connector conversion box	External cable	GOT model	Total distance *2	Number of connectable equipment
Model	Cable model Connection diagram number	Max. distance	Model	Communication type	Cable model Connection diagram number					
E5ZN	User preparing RS485 connection diagram 1)	500m	K3SC-10	RS-232	User preparing RS232 connection diagram 4)	GT11H-CNB-37S	GT11H-C30-37P (3m)	GT14 Handy	6m	16 temperature controllers for 1 GOT

*1 The interface converter is a product manufactured by OMRON Corporation. For details on the product, contact OMRON Corporation.

*2 The distance from the GOT to the interface converter (Connection cable 2) + External cable)

(2) When using the external cable (GT11H-C□□□-37P)

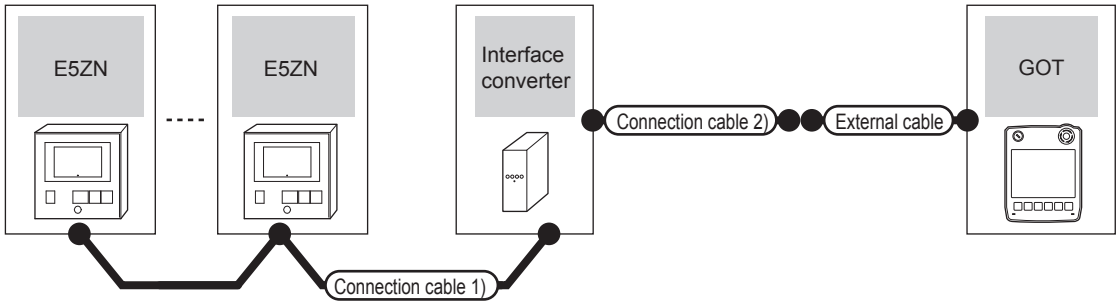

Temperature controller	Connection cable 1)		Interface converter*1		Connection cable 2)	External cable	GOT model	Total distance *2	Number of connectable equipment
Model	Cable model Connection diagram number	Max. distance	Model	Communication type	Cable model Connection diagram number				
E5ZN	User preparing RS485 connection diagram 1)	500m	K3SC-10	RS-232	User preparing RS232 connection diagram 5)	GT11H-C30-37P (3m)	GT14 Handy	6m	16 temperature controllers for 1 GOT

*1 The interface converter is a product manufactured by OMRON Corporation. For details on the product, contact OMRON Corporation.

*2 The distance from the GOT to the interface converter (Connection cable 2) + External cable)

(3) When using the external cable (GT11H-C□□□)

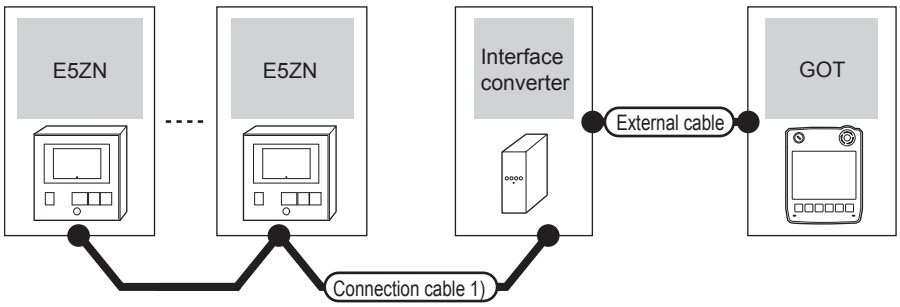

Temperature controller	Connection cable 1)		Interface converter*1		External cable	GOT model	Total distance *2	Number of connectable equipment
Model	Cable model Connection diagram number	Max. distance	Model	Communication type				
E5ZN	User preparing RS485 connection diagram 1)	500m	K3SC-10	RS-232	GT11H-C30 (3m) GT11H-C60 (6m) User preparing RS232 connection diagram 6)	GT14 Handy	6m	16 temperature controllers for 1 GOT

*1 The interface converter is a product manufactured by OMRON Corporation. For details on the product, contact OMRON Corporation.

*2 The distance from the GOT to the interface converter (Connection cable 2) + External cable)

34.3 Connection Diagram

The following diagram shows the connection between the GOT and the PLC.

34.3.1 RS-232 cable

■ Connection diagram

RS232 connection diagram 1)

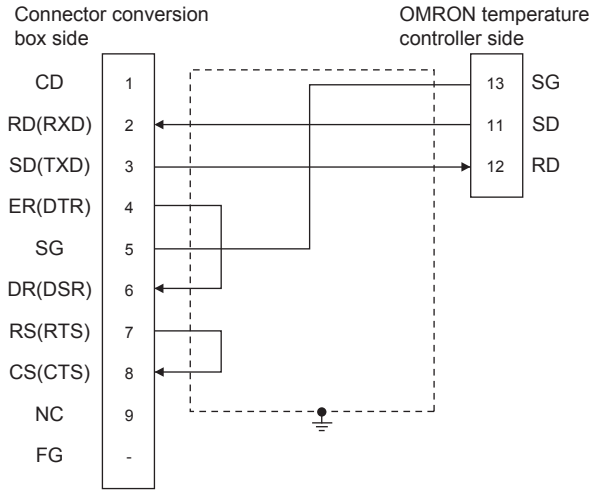

RS232 connection diagram 2)

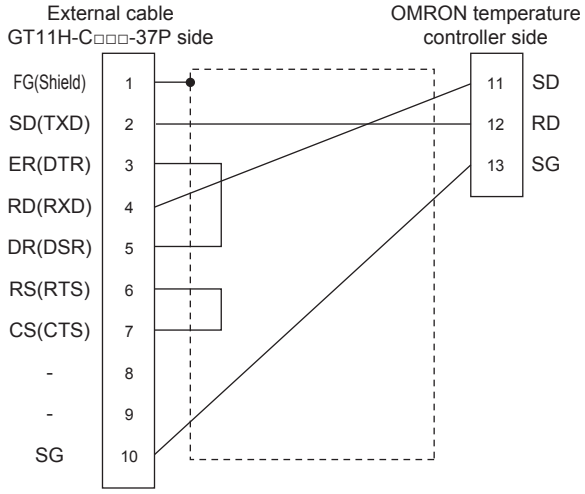

RS232 connection diagram 3)

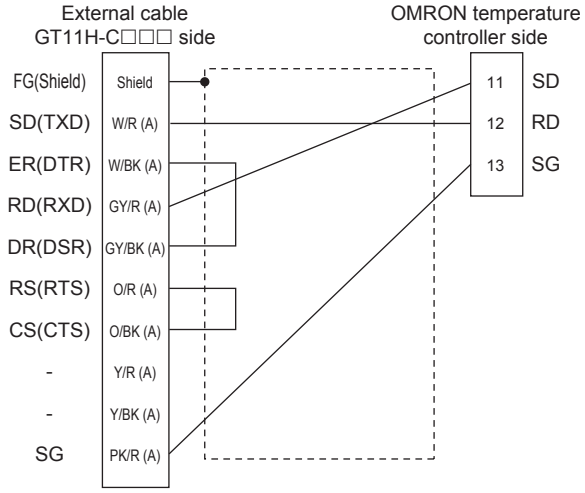

RS232 connection diagram 4)

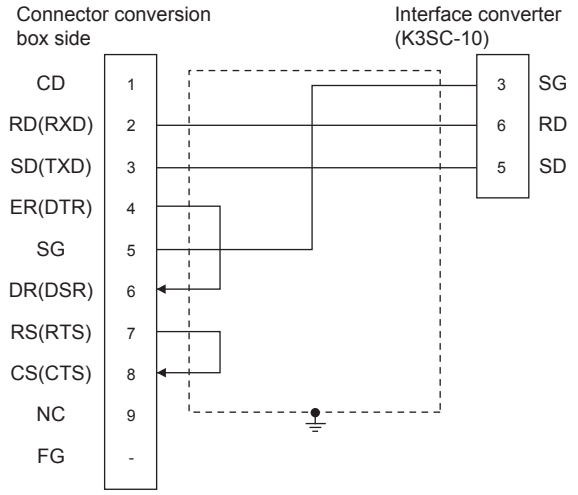

RS232 connection diagram 5)

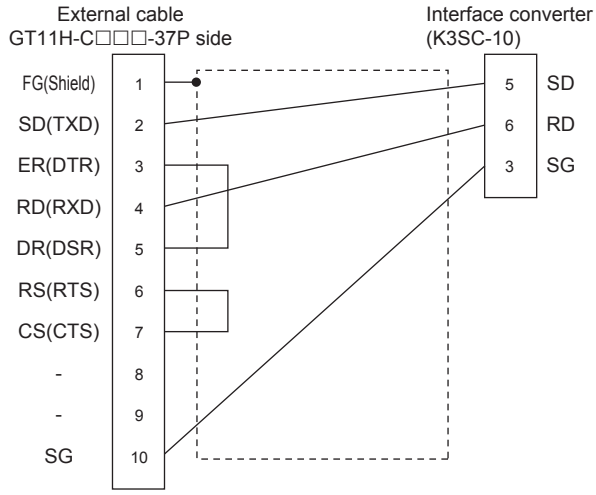

RS232 connection diagram 6)

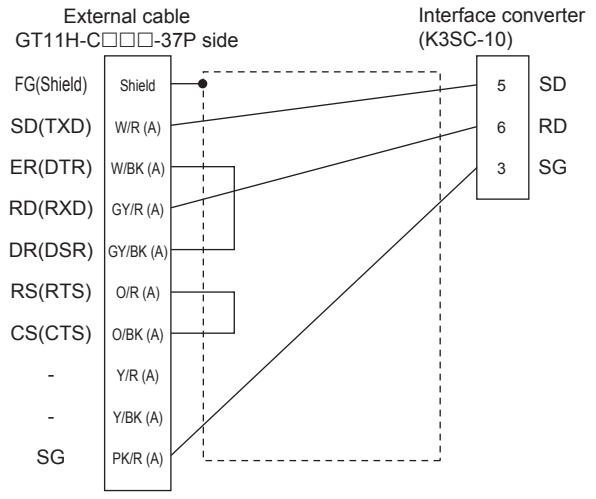

■ Precautions when preparing a cable

(1) Cable length
The total distance (between GOT and controllers) of RS-232 cable must be 6m or less.

(2) Connector conversion box side connector
For the connector conversion box side connector, refer to the following.

☞ 6.6 Connector Conversion Box

(3) External cable side connector
For the connector specifications of the external cable side, refer to the following.

☞ 8.2 External Cable, Relay Cable

(4) OMRON temperature controller side connector
Use the connector compatible with the OMRON temperature controller.
For details, refer to the user's manual of the OMRON temperature controller.

34.3.2 RS-485 cable

■ Connection diagram

RS485 connection diagram 1)

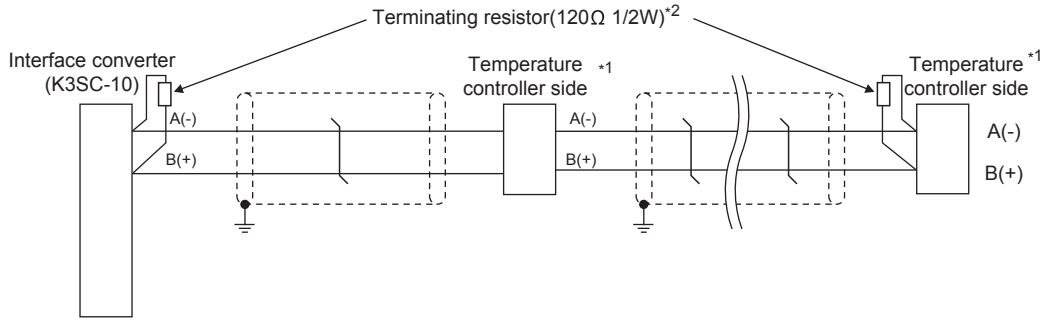

*1 Pin No. of temperature controller differs depending on the model. Refer to the following.

*2 Terminating resistor should be provided for a temperature controller and an interface converter which will be terminating resistors.

Signal name	Model of temperature controller			Interface converter (K3SC-10)
	E5AN E5EN E5CN	E5GN	E5ZN	
	Pin No.	Pin No.	Pin No.	Pin No.
A(-)	12	6	24	8
B(+)	11	5	23	11

■ Precautions when preparing a cable

(1) Cable length

The length of the RS-485 cable must be 500m or less.

(2) OMRON temperature controller side connector

Use the connector compatible with the OMRON temperature controller.

For details, refer to the user's manual of the OMRON temperature controller.

■ Connecting terminating resistors

(1) OMRON temperature controller side

The terminating resistor must be connected to the OMRON temperature controller.

☞ User's Manual of the OMRON temperature controller

34.4 GOT Side Settings

34.4.1 Setting communication interface (Communication settings)

Set the channel of the equipment connected to the GOT.

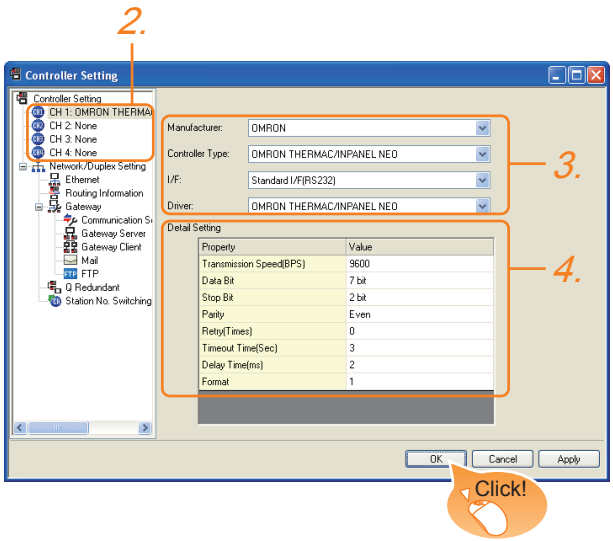

1. Select [Common] → [Controller Setting] from the menu.
2. The Controller Setting window is displayed. Select the channel to be used from the list menu.
3. Set the following items.
   - Manufacturer: OMRON
   - Controller Type: OMRON THERMAC/INPANEL NEO
   - I/F: Interface to be used
   - Driver: OMRON THERMAC/INPANEL NEO
4. The detailed setting is displayed after Manufacturer, Controller Type, I/F, and Driver are set.
   Make the settings according to the usage environment.
   34.4.2 Communication detail settings

Click the OK button when settings are completed.

POINT

The settings of connecting equipment can be confirmed in [I/F Communication Setting].
For details, refer to the following.
18.1.2 I/F communication setting

34.4.2 Communication detail settings

Make the settings according to the usage environment.

Item	Description	Range
Transmission Speed	Set this item when change the transmission speed used for communication with the connected equipment. (Default: 9600bps)	9600bps, 19200bps, 38400bps, 57600bps, 115200bps
Data Bit	Set this item when change the data length used for communication with the connected equipment. (Default: 7bits)	7bits/8bits
Stop Bit	Specify the stop bit length for communications. (Default: 2bits)	1bit/2bits
Parity	Specify whether or not to perform a parity check, and how it is performed during communication. (Default: Even)	None Even Odd
Retry	Set the number of retries to be performed when a communication error occurs. (Default: 0time)	0 to 5times
Timeout Time	Set the time period for a communication to time out. (Default: 3sec)	3 to 30sec
Delay Time	Set this item to adjust the transmission timing of the communication request from the GOT. (Default: 2ms)	0 to 300 (ms)
Format	Select the communication format. (Default: 1) format 1: only continuous access format 2: continuous and random access	1/2

POINT

(1) Delay Time
When connecting to the temperature controller E5ZN, set the delay time to 5ms or more.

(2) Format setting
The compatible format of temperature controller differs depending on model.

Model	Compatible format
E5AN, E5CN, E5EN, E5GN	Format 1 only
E5ZN	Format 1 or Format 2

For the continuous access and random access of the temperature controller, refer to the following manual.
User's Manual of the OMRON temperature controller

(3) Communication interface setting by Utility
The communication interface setting can be changed on the Utility's [Communication setting] after writing [Communication Settings] of project data.
For details on the Utility, refer to the following manual.
11. COMMUNICATION INTERFACE SETTING (COMMUNICATION SETTING)

(4) Precedence in communication settings
When settings are made by GT Designer3 or the Utility, the latest setting is effective.

34.5 Temperature Controller Side Setting

POINT

OMRON temperature controller

For details of OMRON temperature controller, refer to the following manual.

☞ User's Manual of the OMRON temperature controller

Model		Refer to
Temperature controller	E5AN, E5EN, E5CN, E5GN	34.5.1
	E5ZN	34.5.2
Interface converter	K3SC-10	34.5.3

34.5.1 Connecting to E5AN, E5EN, E5CN, E5GN

Set the communication data by operating the key of the temperature controller.

Item	Set value
Protocol	CompoWay/F (Sysway)
Transmission speed*1	9600bps, 19200bps
Data bit*1	8bits, 7bits
Parity bit*1	Even, Odd, None
Stop bit*1	1bit, 2bits
Communication unit NO.*2	0 to 99
CMWT (Communication write)*3	ON

*1 Adjust the settings with GOT settings.
*2 Select the communication unit No. without overlapping with that of other units.
*3 When changing the device value of the temperature controller from the GOT, set CMWT (Communication write) to ON in advance.

34.5.2 Connecting to E5ZN

Set the communication data by operating the key of the temperature controller.

Item	Set value
Transmission speed*1	9600bps, 38400bps
Data bit*1	8bits, 7bits
Parity bit*1	Even, Odd, None
Stop bit*1	1bit, 2bits
Communication unit NO.*2	0 to 15
CMWT (Communication write)*3	ON

*1 Adjust the settings with GOT settings.
*2 Select the communication unit No. without overlapping with that of other units.
*3 When changing the device value of the temperature controller from the GOT, set CMWT (Communication write) to ON in advance.

34.5.3 Connecting to interface converter (K3SC-10)

■ Communication settings

Make the communication settings by operating the DIP switch of the temperature controller.

Item	Set value
Transmission speed*1	19200bps, 38400bps
Data bit*1	7 bits, 8 bits
Parity bit*1	Odd, even, none
Stop bit*1	1bit, 2bits
Communication type	RS-232C ⟷ RS485
Echo back*2	With, Without

*1 Adjust the settings with GOT settings.
*2 Set to "Without".

■ Settings by DIP switch

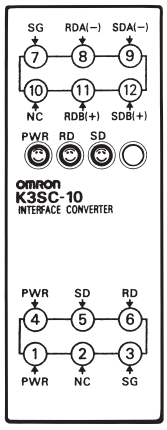

Front of K3SC-10 body

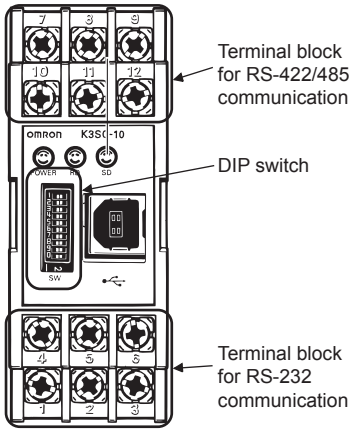

Inside of K3SC-10 body
(When removing the front cover)

(1) Transmission speed settings

Transmission speed (bps)	Switch No.		
	1	2	3
1200	ON	OFF	OFF
2400	OFF	ON	OFF
4800	ON	ON	OFF
9600	OFF	OFF	OFF
19200	ON	OFF	ON
38400	OFF	ON	ON

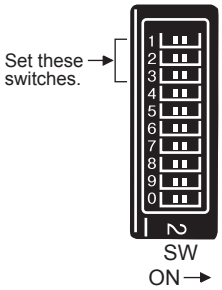

(2) Settings of data length, parity bit, stop bit, master/ slave device and echo back

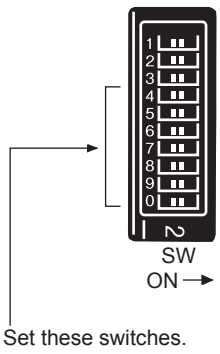

Setting item	Set value	Switch No.						
		4	5	6	7	8	9	0
Data bit	7bits	OFF						
	8bits	ON						
Stop bit	2bits		OFF					
	1bit		ON					
Parity	Even			OFF	OFF			
	Odd			ON	OFF			
	Disable			OFF	ON			
Communication type	RS232C ⟷ RS422					OFF	ON	
	RS-232C ⟷ RS485					OFF	OFF	
Echo back	Disable							OFF
	Enable							ON

34.5.4 Station number setting

Set each station number so that no station number overlaps.
The station number can be set without regard to the cable connection order. There is no problem even if station numbers are not consecutive.

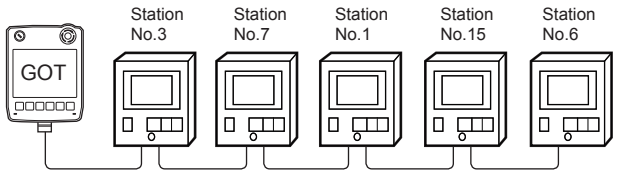

Examples of station number setting

(1) Direct specification
When setting the device, specify the station number of the temperature controller of which data is to be changed.

Model	Specification range
E5AN, E5EN, E5CN, E5GN	0 to 99
E5ZN	0 to 15

(2) Indirect specification
When setting the device, indirectly specify the station number of the inverter of which data is to be changed using the 16-bit GOT internal data register (GD10 to GD25).
When specifying the station No. from 100 to 115 on GT Designer3, the value of GD10 to GD25 compatible to the station No. specification will be the station No. of the temperature controller.

Specification station No.	Compatible device	Setting range
100	GD10	0 to 99: For E5AN, E5EN, E5CN or E5GN 0 to 15: For E5ZN For the setting other than the above, an error (dedicated device is out of range) will occur.
101	GD11	
102	GD12	
103	GD13	
104	GD14	
105	GD15	
106	GD16	
107	GD17	
108	GD18	
109	GD19	
110	GD20	
111	GD21	
112	GD22	
113	GD23	
114	GD24	
115	GD25	

(3) All station specification
Target station differs depending on write-in operation or read-out operation.
- For write-in operation, all station will be a target.
- For read-out operation, only one station will be a target.

34.6 Device Range that Can Be Set

For details on the device range of controllers that can be used on GT14 Handy, refer to the following manuals.

☞ GT Designer3 Version1 Screen Design Manual(Fundamentals)

☞ GOT1000 Series Connection Manual (Non-Mitsubishi Products 1) for GT Works3

34.7 Precautions

■ Station number setting of the temperature controller system

Make sure to establish temperature controller system with No.1 station.

■ GOT clock control

Since the temperature controller does not have a clock function, the settings of [time adjusting] or [Broadcast] by GOT clock control will be disabled.

■ Cutting the portion of multiple connection of the controller

The GOT can disconnect some of multiple connected equipment by setting GOT internal device. For example, the faulty station where a communication timeout error occurs can be disconnected from connected equipment.
For details of the setting contents of GOT internal device, refer to the following manual.

☞ GT Designer3 Version1 Screen Design Manual

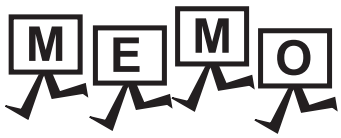
MEMO

35. CONNECTION TO KEYENCE PLC

35.1 Connectable Model List

The following table shows the connectable models.

Model	Clock	Communication type	GT14 Handy	Refer to
KV-5500 KV-5000	○	RS-232	○	35.2.1
		RS-422		
		RS-485		
	○	Ethernet	○	35.3.1
KV-3000	○	RS-232	○	35.2.2
		RS-422		
		RS-485		
	○	Ethernet	○	35.3.1
KV-1000	○	RS-232	○	35.2.3
		RS-422		
		RS-485		
	○	Ethernet	○	35.3.1
KV-700	○	RS-232	○	35.2.4
		RS-422		
		RS-485		
	○	Ethernet	○	35.3.1

35.2 Serial Connection

35.2.1 System configuration for connecting KV-5500,KV-5000

Communication driver
KEYENCE KV-700/1000

(1) When using the connector conversion box

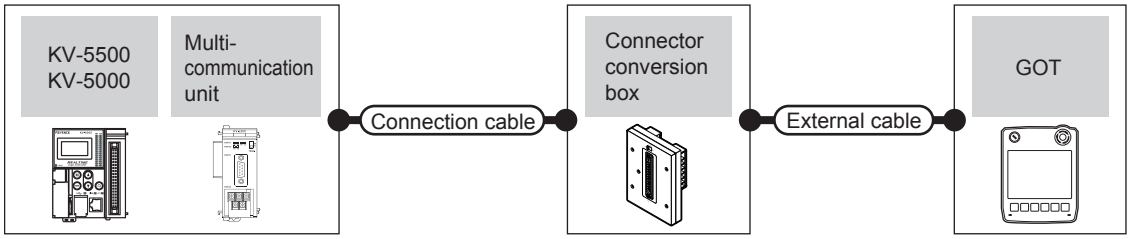

PLC			Connection cable	Connector conversion box	External cable	GOT model	Total distance	Number of connectable equipment
Model	Multi-communication unit*1	Communication type	Cable model Connection diagram number					
KV-5500 KV-5000	KV-L20V (port 1)	RS-232	GT09-C30R21102-9S(3m) or User preparing RS232 connection diagram 4)	GT11H-CNB-37S	GT11H-C30-37P(3m)	GT14 Handy	6m	1 GOT for 1 multi-communication unit
	KV-L20V (port 2)	RS-232	GT09-C30R21103-3T(3m) or User preparing RS232 connection diagram 7)	GT11H-CNB-37S	GT11H-C30-37P(3m)	GT14 Handy	6m	
		RS-422	GT09-C30R41101-5T(3m) GT09-C100R41101-5T(10m) or User preparing RS422 connection diagram 1)	GT11H-CNB-37S	GT11H-C30-37P(3m) GT11H-C60-37P(6m) GT11H-C100-37P(10m)	GT14 Handy	13m	

*1 Product manufactured by KEYENCE CORPORATION. For details of the product, contact KEYENCE CORPORATION.

(2) When using the external cable (GT11H-C□□□-37P)

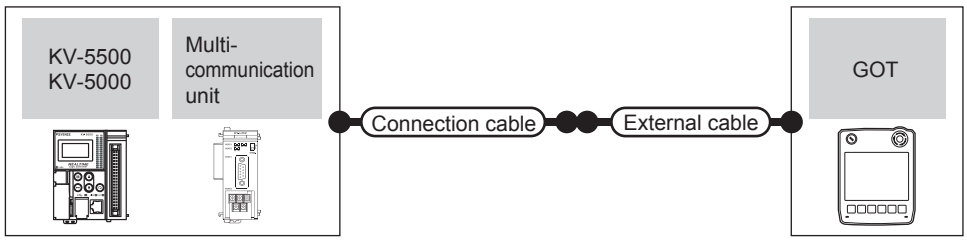

PLC			Connection cable	External cable	GOT model	Total distance	Number of connectable equipment
Model	Multi-communication unit*1	Communication type	Cable model Connection diagram number				
KV-5500 KV-5000	KV-L20V (port 1)	RS-232	User preparing RS232 connection diagram 5)	GT11H-C30-37P(3m)	GT14 Handy	6m	1 GOT for 1 multi-communication unit
	KV-L20V (port 2)	RS-232	User preparing RS232 connection diagram 8)	GT11H-C30-37P(3m)	GT14 Handy	6m	
		RS-422	User preparing RS422 connection diagram 2)	GT11H-C30-37P(3m) GT11H-C60-37P(6m) GT11H-C100-37P(10m)	GT14 Handy	13m	

*1 Product manufactured by KEYENCE CORPORATION. For details of the product, contact KEYENCE CORPORATION.

(3) When using the external cable (GT11H-C□□□)

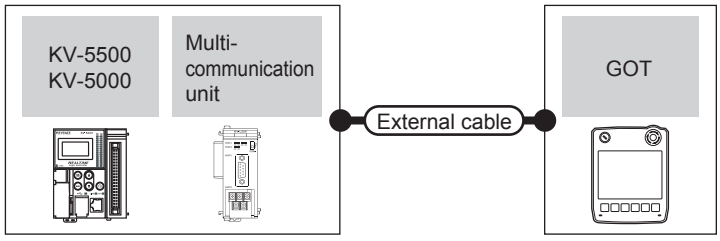

PLC			External cable	GOT model	Total distance	Number of connectable equipment
Model	Multi-communication unit*1	Communication type				
KV-5500 KV-5000	KV-L20V (port 1)	RS-232	GT11H-C30(3m) GT11H-C60(6m) User preparing RS232 connection diagram 6)	GT14 Handy	6m	1 GOT for 1 multi-communication unit
	KV-L20V (port 2)	RS-232	GT11H-C30(3m) GT11H-C60(6m) User preparing RS232 connection diagram 9)	GT14 Handy	6m	
		RS-422	GT11H-C30(3m) GT11H-C60(6m) GT11H-C100(10m) User preparing RS422 connection diagram 3)	GT14 Handy	13m	

*1 Product manufactured by KEYENCE CORPORATION. For details of the product, contact KEYENCE CORPORATION.

35.2.2 Connecting to KV-3000

Communication driver
KEYENCE KV-700/1000

■ When connecting to a PLC

(1) When using the connector conversion box

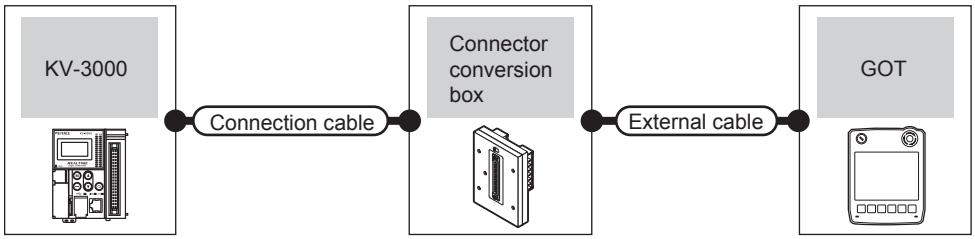

PLC		Connection cable		Connector conversion box	External cable	GOT model	Total distance	Number of connectable equipment
Model	Communication type	Cable model Connection diagram number	Conversion connector*1					
KV-3000	RS-232	GT09-C30R21101-6P or User preparing RS232 connection diagram 1)	-	GT11H-CNB-37S	GT11H-C30-37P(3m)	GT14 Handy	6m	1 GOT for 1 PLC
		OP-26487*1	OP-26486			GT14 Handy	6m	

*1 Product manufactured by KEYENCE CORPORATION. For details of the product, contact KEYENCE CORPORATION.

(2) When using the external cable (GT11H-C□□□-37P)

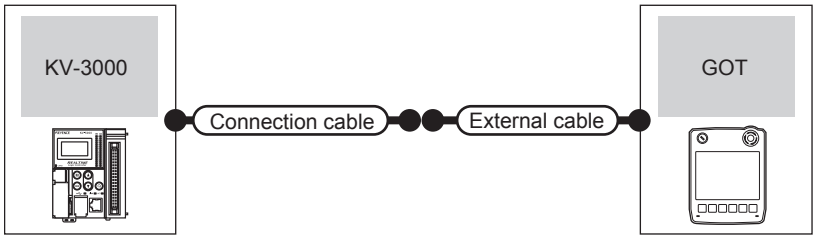

PLC		Connection cable	External cable	GOT model	Total distance	Number of connectable equipment
Model	Communication type	Cable model Connection diagram number				
KV-3000	RS-232	User preparing RS232 connection diagram 1)	GT11H-C30-37P(3m)	GT14 Handy	6m	1 GOT for 1 PLC

(3) When using the external cable (GT11H-C□□□)

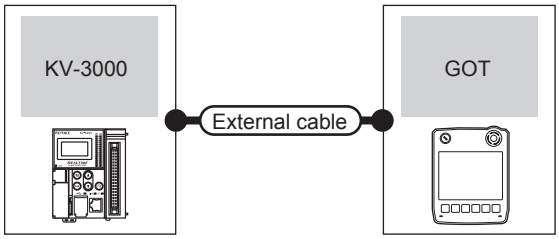

PLC		External cable	GOT model	Total distance	Number of connectable equipment
Model	Communication type				
KV-3000	RS-232	GT11H-C30(3m) GT11H-C60(6m) User preparing RS232 connection diagram 3)	GT14 Handy	6m	1 GOT for 1 PLC

*1 Product manufactured by KEYENCE CORPORATION. For details of the product, contact KEYENCE CORPORATION.

■ When connecting to multi-communication unit

(1) When using the connector conversion box

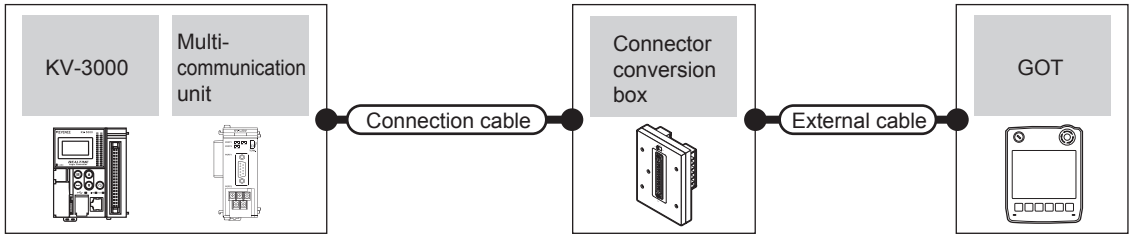

PLC			Connection cable	Connector conversion box	External cable	GOT model	Total distance	Number of connectable equipment
Model	Multi-communication unit*1	Communication type	Cable model Connection diagram number					
KV-3000	KV-L20V (port 1)	RS-232	GT09-C30R21102-9S(3m) or User preparing RS232 connection diagram 4)	GT11H-CNB-37S	GT11H-C30-37P(3m)	GT14 Handy	6m	1 GOT for 1 multi-communication unit
	KV-L20V (port 2)	RS-232	GT09-C30R21103-3T(3m) or User preparing RS232 connection diagram 7)	GT11H-CNB-37S	GT11H-C30-37P(3m)	GT14 Handy	6m	
		RS-422	GT09-C30R41101-5T(3m) GT09-C100R41101-5T(10m) or User preparing RS422 connection diagram 1)	GT11H-CNB-37S	GT11H-C30-37P(3m) GT11H-C60-37P(6m) GT11H-C100-37P(10m)	GT14 Handy	13m	

*1 Product manufactured by KEYENCE CORPORATION. For details of the product, contact KEYENCE CORPORATION.

(2) When using the external cable (GT11H-C□□□-37P)

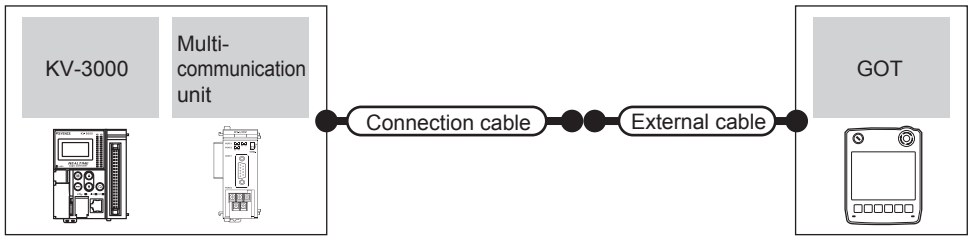

PLC			Connection cable	External cable	GOT model	Total distance	Number of connectable equipment
Model	Multi-communication unit*1	Communication type	Cable model Connection diagram number				
KV-3000	KV-L20V (port 1)	RS-232	User preparing RS232 connection diagram 5)	GT11H-C30-37P(3m)	GT14 Handy	6m	1 GOT for 1 multi-communication unit
	KV-L20V (port 2)	RS-232	User preparing RS232 connection diagram 8)	GT11H-C30-37P(3m)	GT14 Handy	6m	
		RS-422	User preparing RS422 connection diagram 1)	GT11H-C30-37P(3m) GT11H-C60-37P(6m) GT11H-C100-37P(10m)	GT14 Handy	13m	

*1 Product manufactured by KEYENCE CORPORATION. For details of the product, contact KEYENCE CORPORATION.

(3) When using the external cable (GT11H-C□□□)

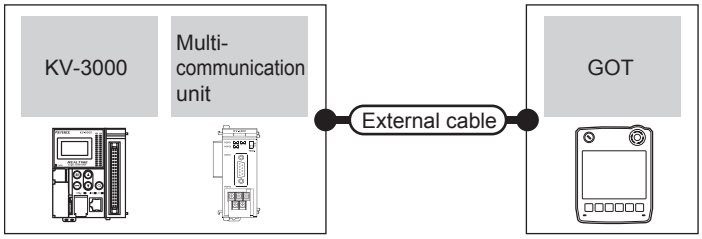

PLC			External cable	GOT model	Total distance	Number of connectable equipment
Model	Multi-communication unit*1	Communication type				
KV-3000	KV-L20V (port 1)	RS-232	GT11H-C30(3m) GT11H-C60(6m) User preparing RS232 connection diagram 6)	GT14 Handy	6m	1 GOT for 1 multi-communication unit
	KV-L20V (port 2)	RS-232	GT11H-C30(3m) GT11H-C60(6m) User preparing RS232 connection diagram 9)	GT14 Handy	6m	
		RS-422	GT11H-C30(3m) GT11H-C60(6m) GT11H-C100(10m) User preparing RS422 connection diagram 3)	GT14 Handy	13m	

*1 Product manufactured by KEYENCE CORPORATION. For details of the product, contact KEYENCE CORPORATION.

35.2.3 Connecting to KV-1000

Communication driver
KEYENCE KV-700/1000

■ When connecting to a PLC

(1) When using the connector conversion box

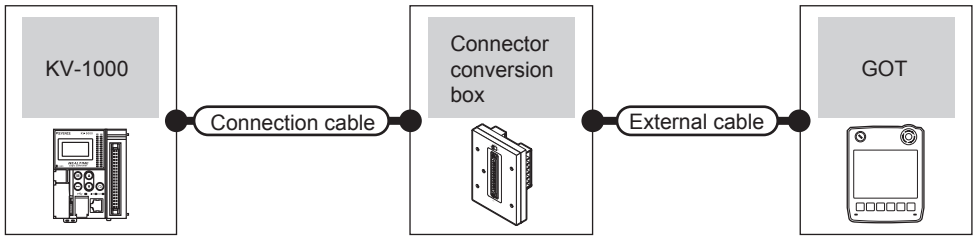

PLC		Connection cable		Connector conversion box	External cable	GOT model	Total distance	Number of connectable equipment
Model	Communication type	Cable model Connection diagram number	Conversion connector*1					
KV-1000	RS-232	GT09-C30R21101-6P or User preparing RS232 connection diagram 1)	-	GT11H-CNB-37S	GT11H-C30-37P(3m)	GT14 Handy	6m	1 GOT for 1 PLC
		OP-26487*1	OP-26486			GT14 Handy	6m	

*1 Product manufactured by KEYENCE CORPORATION. For details of the product, contact KEYENCE CORPORATION.

(2) When using the external cable (GT11H-C□□□-37P)

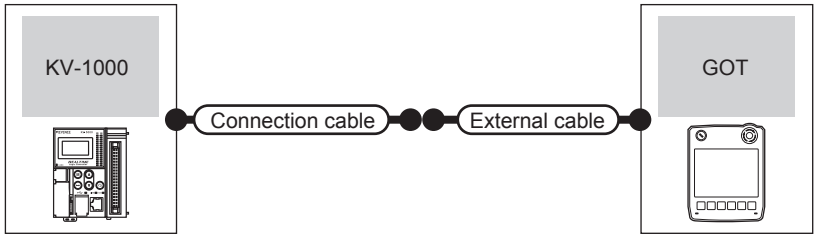

PLC		Connection cable	External cable	GOT model	Total distance	Number of connectable equipment
Model	Communication type	Cable model Connection diagram number				
KV-1000	RS-232	User preparing RS232 connection diagram 2)	GT11H-C30-37P(3m)	GT14 Handy	6m	1 GOT for 1 PLC

*1 Product manufactured by KEYENCE CORPORATION. For details of the product, contact KEYENCE CORPORATION.

(3) When using the external cable (GT11H-C□□□)

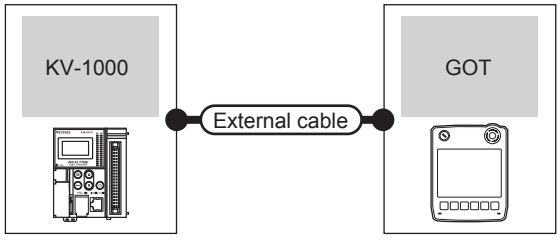

PLC		External cable	GOT model	Total distance	Number of connectable equipment
Model	Communication type				
KV-1000	RS-232	GT11H-C30(3m) GT11H-C60(6m) User preparing RS232 connection diagram 3)	GT14 Handy	6m	1 GOT for 1 PLC

■ When connecting to multi-communication unit

(1) When using the connector conversion box

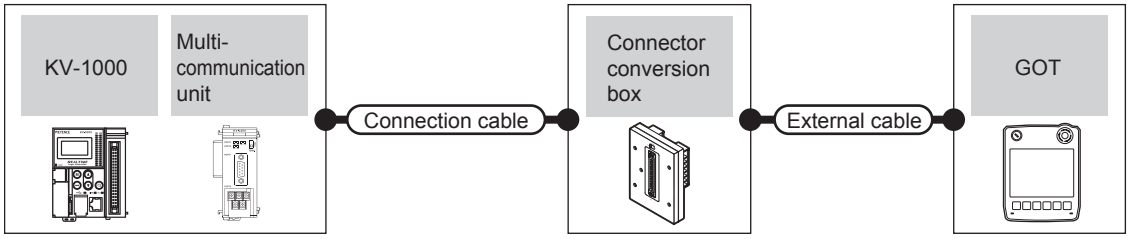

PLC			Connection cable	Connector conversion box	External cable	GOT model	Total distance	Number of connectable equipment
Model	Multi-communication unit*1	Communication type	Cable model Connection diagram number					
KV-1000	KV-L20R, KV-L20V (port 1)	RS-232	GT09-C30R21102-9S(3m) or User preparing RS232 connection diagram 4)	GT11H-CNB-37S	GT11H-C30-37P(3m)	GT14 Handy	6m	1 GOT for 1 multi-communication unit
	KV-L20R, KV-L20V (port 2)	RS-232	GT09-C30R21103-3T(3m) or User preparing RS232 connection diagram 7)	GT11H-CNB-37S	GT11H-C30-37P(3m)	GT14 Handy	6m	
		RS-422	GT09-C30R41101-5T(3m) GT09-C100R41101-5T(10m) or User preparing RS422 connection diagram 1)	GT11H-CNB-37S	GT11H-C30-37P (3m) GT11H-C60-37P (6m) GT11H-C100-37P (10m)	GT14 Handy	13m	

*1 Product manufactured by KEYENCE CORPORATION. For details of the product, contact KEYENCE CORPORATION.

(2) When using the external cable (GT11H-C□□□-37P)

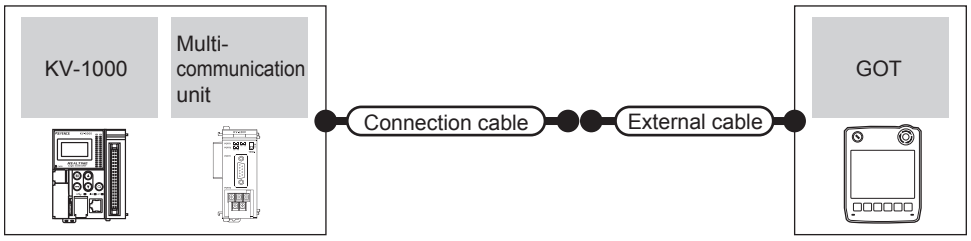

PLC			Connection cable	External cable	GOT model	Total distance	Number of connectable equipment
Model	Multi-communication unit*1	Communication type	Cable model Connection diagram number				
KV-1000	KV-L20R, KV-L20V (port 1)	RS-232	User preparing RS232 connection diagram 5)	GT11H-C30-37P(3m)	GT14 Handy	6m	1 GOT for 1 multi-communication unit
	KV-L20R, KV-L20V (port 2)	RS-232	User preparing RS232 connection diagram 8)	GT11H-C30-37P(3m)	GT14 Handy	6m	
		RS-422	User preparing RS422 connection diagram 2)	GT11H-C30-37P(3m) GT11H-C60-37P(6m) GT11H-C100-37P(10m)	GT14 Handy	13m	

*1 Product manufactured by KEYENCE CORPORATION. For details of the product, contact KEYENCE CORPORATION.

(3) When using the external cable (GT11H-C□□□)

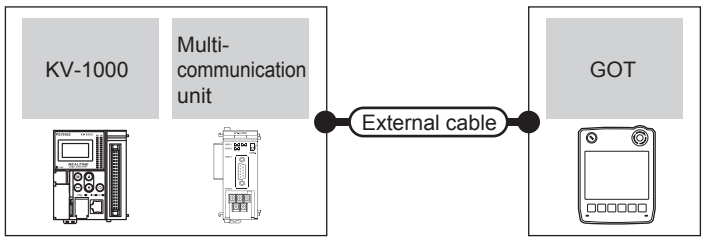

PLC			External cable	GOT model	Total distance	Number of connectable equipment
Model	Multi-communication unit*1	Communication type				
KV-1000	KV-L20R, KV-L20V (port 1)	RS-232	GT11H-C30(3m) GT11H-C60(6m) User preparing RS232 connection diagram 6)	GT14 Handy	6m	1 GOT for 1 multi-communication unit
	KV-L20R, KV-L20V (port 2)	RS-232	GT11H-C30(3m) GT11H-C60(6m) User preparing RS232 connection diagram 9)	GT14 Handy	6m	
		RS-422	GT11H-C30(3m) GT11H-C60(6m) GT11H-C100(10m) User preparing RS232 connection diagram 3)	GT14 Handy	13m	

*1 Product manufactured by KEYENCE CORPORATION. For details of the product, contact KEYENCE CORPORATION.

35.2.4 Connecting to KV-700

Communication driver
KEYENCE KV-700/1000

■ When connecting to a PLC

(1) When using the connector conversion box

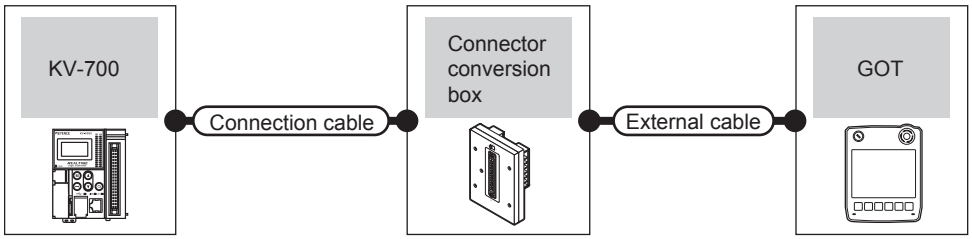

PLC		Connection cable		Connector conversion box	External cable	GOT model	Total distance	Number of connectable equipment
Model	Communication type	Cable model Connection diagram number	Conversion connector*1					
KV-700	RS-232	GT09-C30R21101-6P or User preparing RS232 connection diagram 1)	-	GT11H-CNB-37S	GT11H-C30-37P(3m)	GT14 Handy	6m	1 GOT for 1 PLC
		OP-26487*1	OP-26486			GT14 Handy	6m	

*1 Product manufactured by KEYENCE CORPORATION. For details of the product, contact KEYENCE CORPORATION.

(2) When using the external cable (GT11H-C□□□-37P)

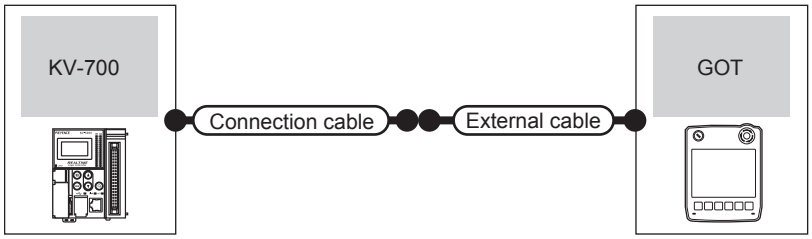

PLC		Connection cable	External cable	GOT model	Total distance	Number of connectable equipment
Model	Communication type	Cable model Connection diagram number				
KV-700	RS-232	User preparing RS232 connection diagram 2)	GT11H-C30-37P(3m)	GT14 Handy	6m	1 GOT for 1 PLC

(3) When using the external cable (GT11H-C□□□)

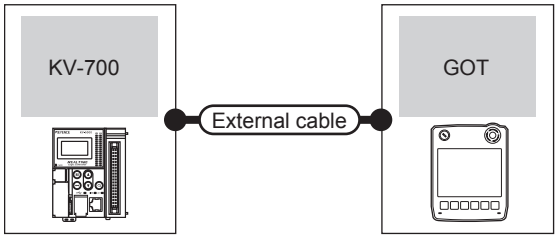

PLC		External cable	GOT model	Total distance	Number of connectable equipment
Model	Communication type				
KV-700	RS-232	GT11H-C30(3m) GT11H-C60(6m) User preparing RS232 connection diagram 3)	GT14 Handy	6m	1 GOT for 1 PLC

■ When connecting to multi-communication unit

(1) When using the connector conversion box

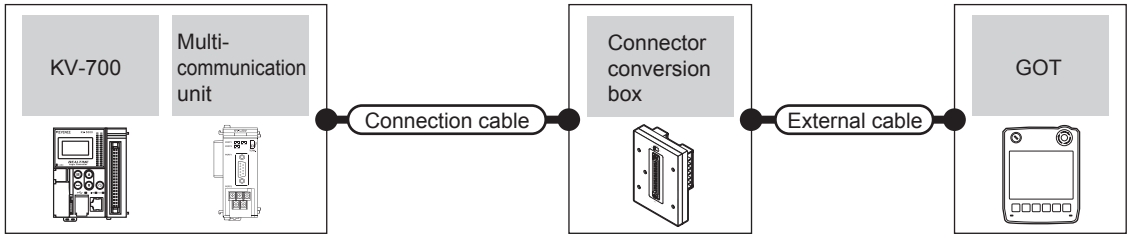

PLC			Connection cable	Connector conversion box	External cable	GOT model	Total distance	Number of connectable equipment
Model	Multi-communication unit*1	Communication type	Cable model Connection diagram number					
KV-700	KV-L20R, KV-L20, KV-L20V (port 1)	RS-232	GT09-C30R21102-9S(3m) or User preparing RS232 connection diagram 4)	GT11H-CNB-37S	GT11H-C30-37P(3m)	GT14 Handy	6m	1 GOT for 1 multi-communication unit
	KV-L20R, KV-L20, KV-L20V (port 2)	RS-232	GT09-C30R21103-3T(3m) or User preparing RS232 connection diagram 7)	GT11H-CNB-37S	GT11H-C30-37P(3m)	GT14 Handy	6m	
		RS-422	GT09-C30R41101-5T(3m) GT09-C100R41101-5T(10m) or User preparing RS422 connection diagram 1)	GT11H-CNB-37S	GT11H-C30-37P (3m) GT11H-C60-37P (6m) GT11H-C100-37P (10m)	GT14 Handy	13m	

*1 Product manufactured by KEYENCE CORPORATION. For details of the product, contact KEYENCE CORPORATION.

(2) When using the external cable (GT11H-C□□□-37P)

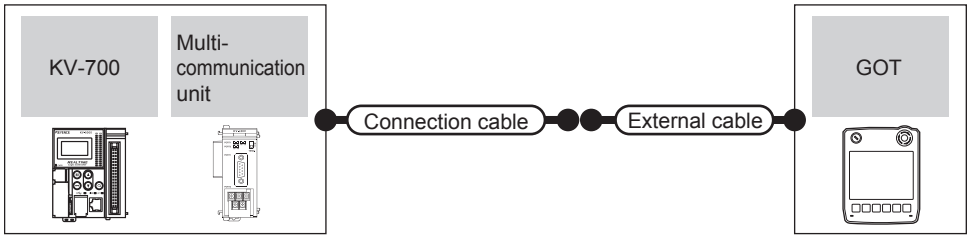

PLC			Connection cable	External cable	GOT model	Total distance	Number of connectable equipment
Model	Multi-communication unit*1	Communication type	Cable model Connection diagram number				
KV-700	KV-L20R, KV-L20, KV-L20V (port 1)	RS-232	User preparing RS232 connection diagram 5)	GT11H-C30-37P(3m)	GT14 Handy	6m	1 GOT for 1 multi-communication unit
	KV-L20R, KV-L20, KV-L20V (port 2)	RS-232	GT09-C30R21103-3T(3m) or User preparing RS232 connection diagram 8)	GT11H-C30-37P(3m)	GT14 Handy	6m	
		RS-422	User preparing RS422 connection diagram 2)	GT11H-C30-37P(3m) GT11H-C60-37P(6m) GT11H-C100-37P(10m)	GT14 Handy	13m	

*1 Product manufactured by KEYENCE CORPORATION. For details of the product, contact KEYENCE CORPORATION.

(3) When using the external cable (GT11H-C□□□)

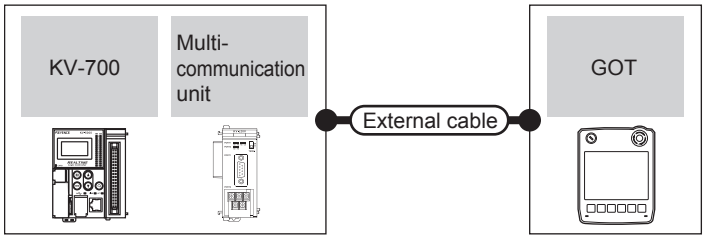

PLC			External cable	GOT model	Total distance	Number of connectable equipment
Model	Multi-communication unit*1	Communication type				
KV-700	KV-L20R, KV-L20, KV-L20V (port 1)	RS-232	GT11H-C30(3m) GT11H-C60(6m) User preparing RS232 connection diagram 6)	GT14 Handy	6m	1 GOT for 1 multi-communication unit
	KV-L20R, KV-L20, KV-L20V (port 2)	RS-232	GT11H-C30(3m) GT11H-C60(6m) User preparing RS232 connection diagram 9)	GT14 Handy	6m	
		RS-422	GT11H-C30(3m) GT11H-C60(6m) GT11H-C100(10m) User preparing RS232 connection diagram 3)	GT14 Handy	13m	

*1 Product manufactured by KEYENCE CORPORATION. For details of the product, contact KEYENCE CORPORATION.

35.2.5 Connection diagram

The following diagram shows the connection between the GOT and the PLC.

■ RS-232 cable

(1) Connection diagram

RS232 connection diagram 1)

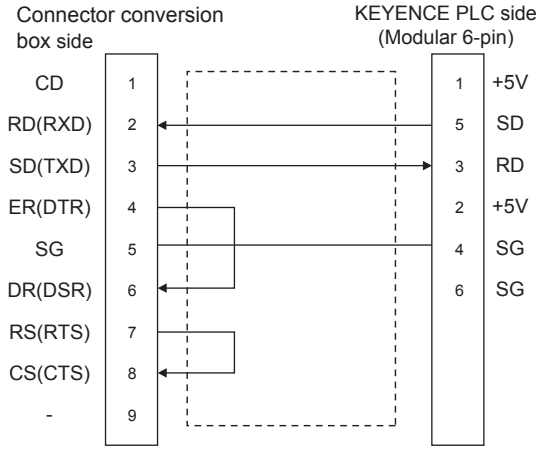

RS232 connection diagram 2)

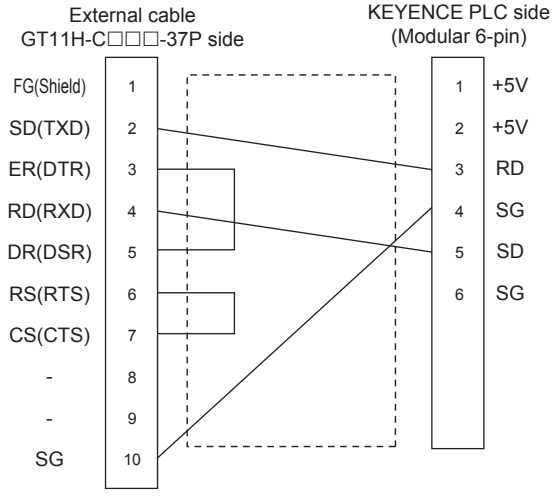

RS232 connection diagram 3)

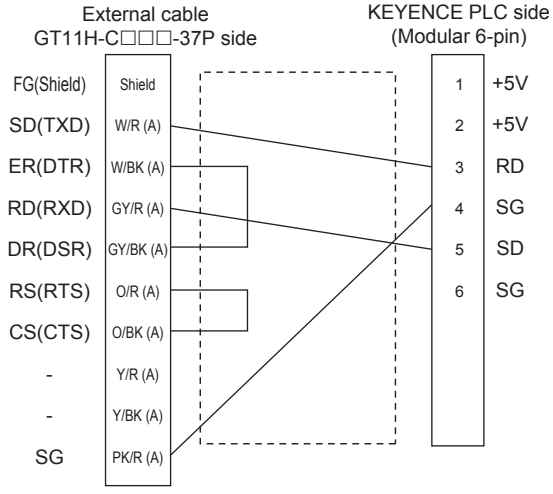

RS232 connection diagram 4)

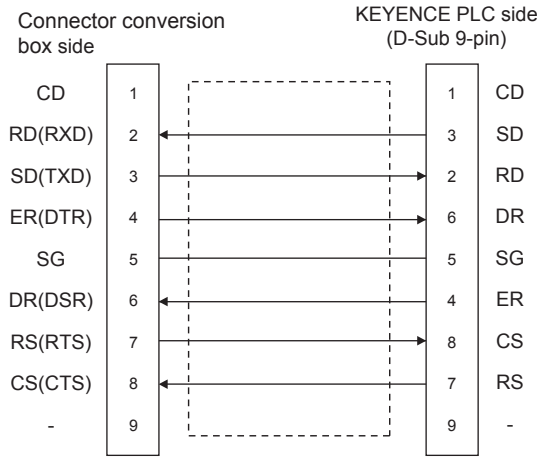

RS232 connection diagram 5)

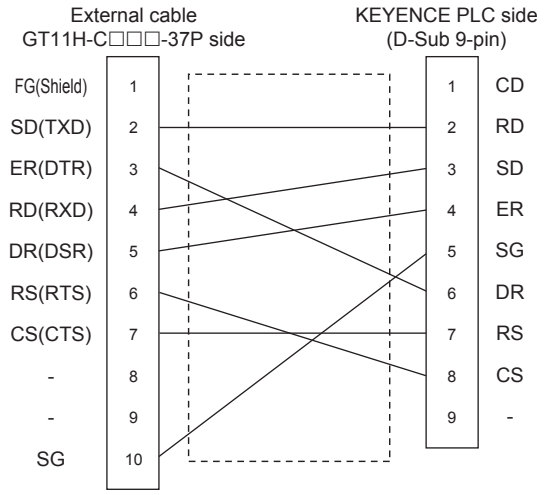

RS232 connection diagram 6)

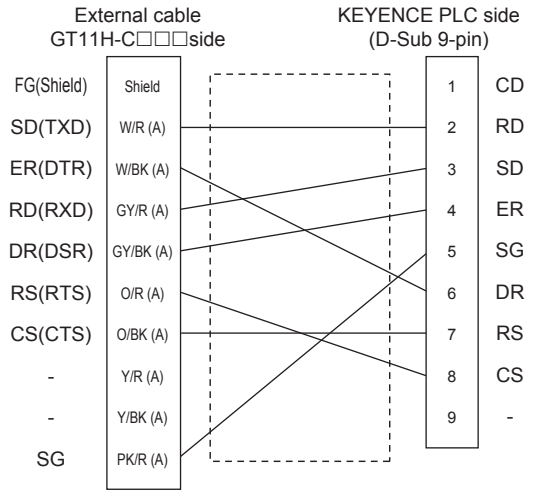

RS232 connection diagram 7)

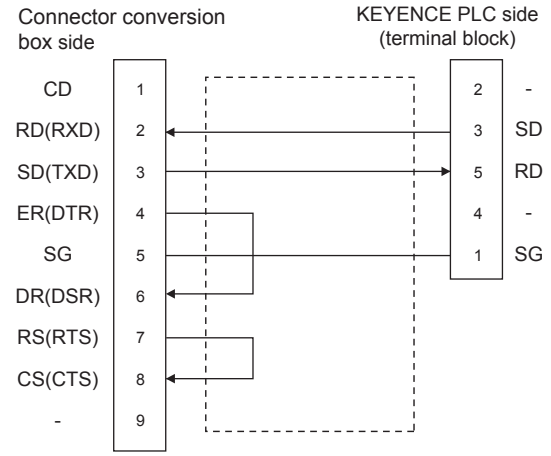

RS232 connection diagram 8)

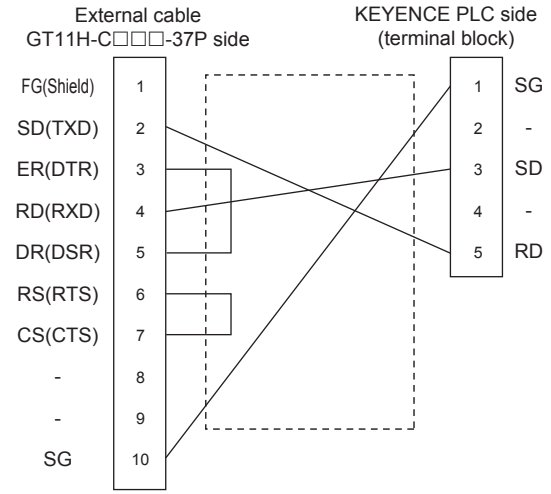

RS232 connection diagram 9)

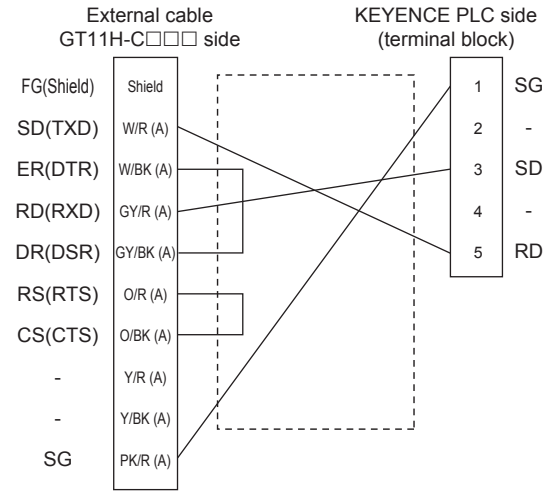

(2) Precautions when preparing a cable

(a) Cable length
The total distance (between the GOT and a controller) of RS-232 cable must be 6m or less.

(b) Connector conversion box side connector
For the connector conversion box side connector, refer to the following.
☞ 6.6 Connector Conversion Box

(c) External cable side connector
For the connector specifications of the external cable side, refer to the following.
☞ 8.2 External Cable, Relay Cable

(d) KEYENCE PLC side connector
Use the connector compatible with the KEYENCE PLC side module.
For details, refer to the KEYENCE PLC user's manual.

■ RS-422 cable

(1) Connection diagram

RS422 connection diagram 1)

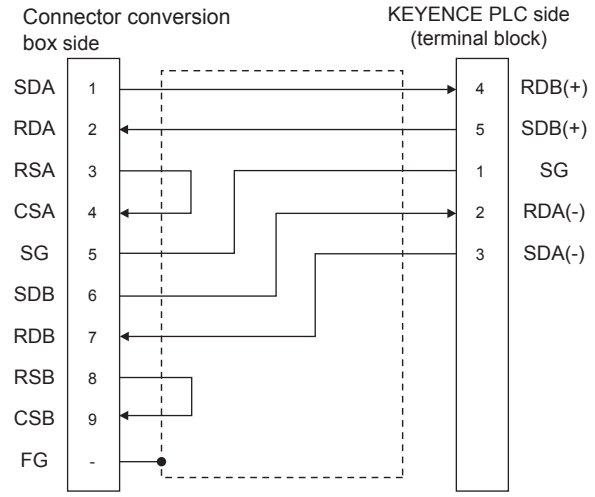

RS422 connection diagram 2)

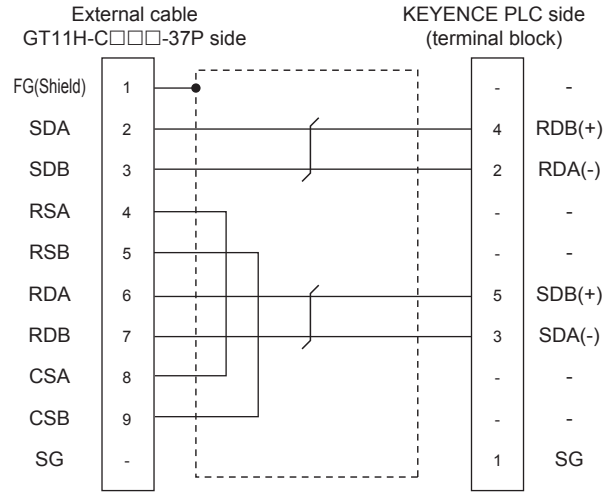

RS422 connection diagram 3)

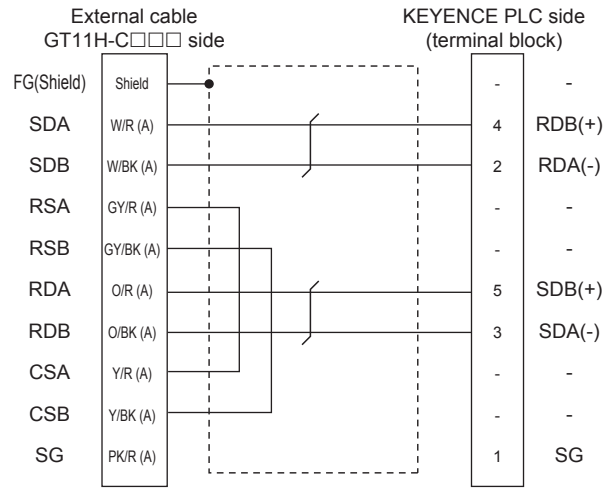

(2) Precautions when preparing a cable

(a) Cable length
The total distance (between GOT and controllers) of RS-422 cable must be 13m or less.

(b) Connector conversion box side connector
For the connector conversion box side connector, refer to the following.
☞ 6.6 Connector Conversion Box

(c) External cable side connector
For the connector specifications of the external cable side, refer to the following.
☞ 8.2 External Cable, Relay Cable

(d) KEYENCE PLC side connector
Use the connector compatible with the KEYENCE PLC side module.
For details, refer to the KEYENCE PLC user's manual.

35.2.6 GOT side settings

■ Setting communication interface (Communication settings)

Set the channel of the equipment connected to the GOT.

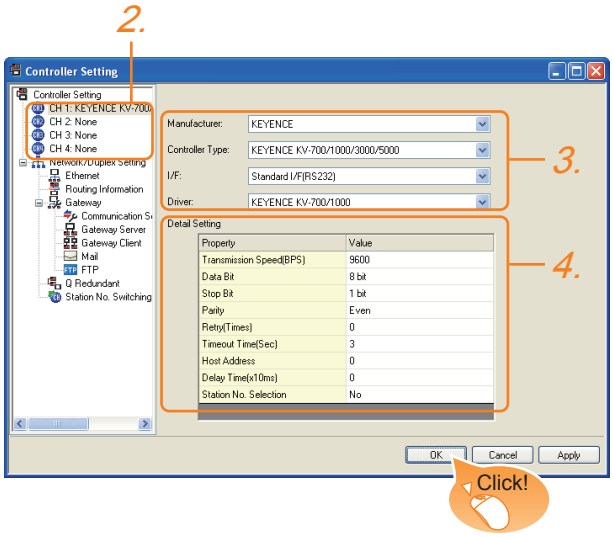

1. Select [Common] → [Controller Setting] from the menu.
2. The Controller Setting window is displayed. Select the channel to be used from the list menu.
3. Set the following items.
   - Manufacturer: KEYENCE
   - Controller Type: KEYENCE KV-700/1000/3000/5000
   - I/F: Interface to be used
   - Driver: KEYENCE KV-700/1000
4. The detailed setting is displayed after Manufacturer, Controller Type, I/F, and Driver are set.
   Make the settings according to the usage environment.

   ■ Communication detail settings

Click the OK button when settings are completed.

POINT

The settings of connecting equipment can be confirmed in [I/F Communication Setting].
For details, refer to the following.

18.1.2 I/F communication setting

■ Communication detail settings

Make the settings according to the usage environment.

Item	Description	Range
Transmission Speed	Set this item when change the transmission speed used for communication with the connected equipment. (Default: 9600bps)	9600bps, 19200bps, 38400bps, 57600bps, 115200bps
Data Bit	Set this item when change the data length used for communication with the connected equipment. (Default: 8bit)	7bits/8bits
Stop Bit	Specify the stop bit length for communications. (Default: 1bit)	1bit/2bits
Parity	Specify whether or not to perform a parity check, and how it is performed during communication. (Default: Even)	None Even Odd
Retry	Set the number of retries to be performed when a communication error occurs. (Default: 0time)	0 to 5times
Timeout Time	Set the time period for a communication to time out. (Default: 3sec)	3 to 30sec
Host Address	Specify the host address (station No. of the PLC to which the GOT is connected) in the network of the GOT. (Default: 0)	0 to 9
Delay Time	Set this item to adjust the transmission timing of the communication request from the GOT. (Default: 0ms)	0 to 300ms
Station No. Selection	Specify whether to use the station No. during communication. If [Yes] is selected, the station No. is fixed to "0." (Default: No)	Yes or No

POINT

(1) Communication interface setting by Utility
The communication interface setting can be changed on the Utility's [Communication setting] after writing [Communication Settings] of project data.
For details on the Utility, refer to the following manual.

11. COMMUNICATION INTERFACE SETTING (COMMUNICATION SETTING)

(2) Precedence in communication settings
When settings are made by GT Designer3 or the Utility, the latest setting is effective.

35.2.7 PLC side setting

POINT

KEYENCE PLC

For details of KEYENCE PLC, refer to the following manual.

☞ KEYENCE PLC user's Manual

Model		Refer to
PLC CPU	KV-3000	35-17
	KV-1000	35-17
	KV-700	35-17
Multi-communication unit	KV-L20R	35-17
	KV-L20	
	KV-L20V	

■ Connecting to KV-3000 or KV-1000

Item	Set value
Transmission speed	9600 to 115200 bps*1
Data bit	8bits
Parity bit	Even
Stop bit	1bit

*1 There is no transmission speed setting on the PLC side. The transmission speed of the PLC side is automatically adjusted to that of the GOT side.

■ Connecting to KV-700

Item	Set value
Transmission speed	9600bps
Data bit	8bits
Parity bit	Even
Stop bit	1bit

■ Connecting to KV-L20R, KV-L20, or KV-L20V

(1) Communication settings

Item	Set value
Communication mode	KV mode (Upper link)
Transmission speed*1*2	4800bps, 9600bps, 19200bps, 38400bps, 57600bps, 115200bps
Data bit	8bits
Parity bit	Even
Stop bit	1bit
Station No.*3	0 to 9

*1 Only transmission speeds available on the GOT side are shown.
*2 Set the same transmission speed as that of the GOT side.
*3 Set the station No. according to the host address on the GOT side.

(2) Setting DIP switches

Set the DIP switches.

(a) When using KV-L20R or KV-L20

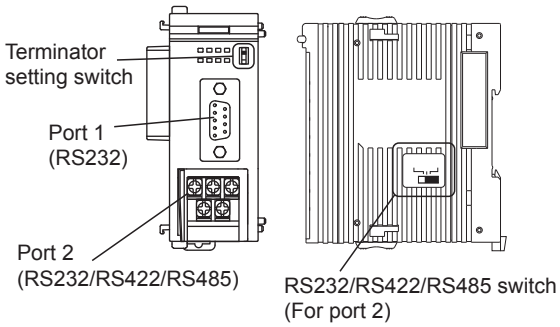

• RS232/RS422/RS485 switch (For port 2) (For KV-L20R)

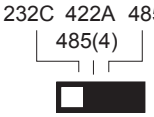

Setting	
For RS-232 communication	For RS-422 communication
RS-232C	RS-422A 485(4)

(For KV-L20)

Setting	
For RS-232 communication	For RS-422 communication
RS-232C	RS-422A

• Terminator setting switch
Set when carrying out RS-422 communication.

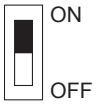

Setting	
When multi-communication unit is a terminal	When multi-communication unit is not a terminal
ON	OFF

(b) When using KV-L20V

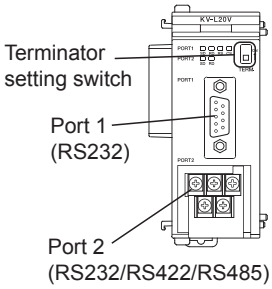

• Terminator setting switch
Set when carrying out RS-422 communication.

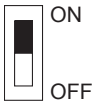

Setting	
When multi-communication unit is a terminal	When multi-communication unit is not a terminal
ON	OFF

35.3 Ethernet Connection

35.3.1 System configuration for connecting to KV-700/1000/3000/5000/5500

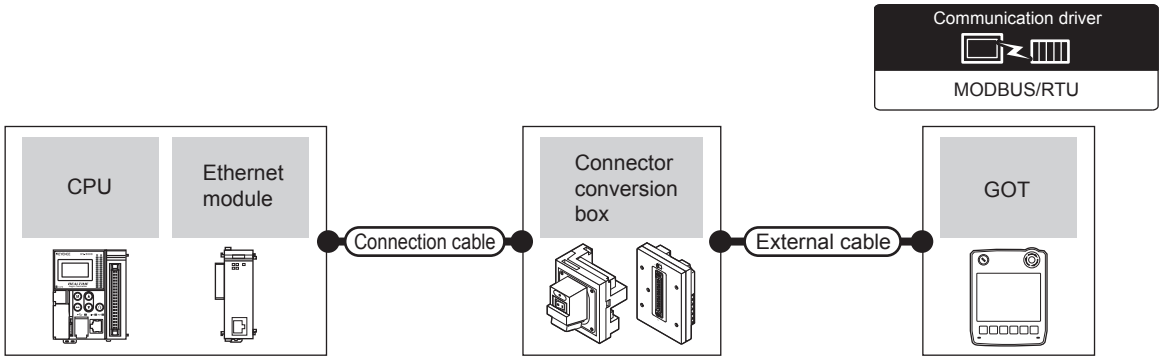

PLC		Connection cable*1	Connector conversion box	External cable*4	GOT model	Maximum segment length	Number of connectable equipment
Series	Ethernet module*3	Cable model					
KV-5000	-	Twisted pair cable • 10BASE-T Shielded twisted pair cable (STP) or unshielded twisted pair cable in category (UTP): 3, 4 and 5 • 100BASE-TX Shielded twisted pair cable (STP): Category 5 and 5e	GT16H-CNB-42S	GT14H-C30-42P (3m) GT14H-C60-42P (6m) GT14H-C100-42P (10m)	GT14 Handy	100m *2	When PLC:GOT is N:1 The following shows the number of PLCs for 1 GOT TCP: 128 or less UDP: 128 or less When PLC:GOT is 1:N The following shows the number of GOTs for 1 PLC TCP: 15 or less UDP: 1 or less
			GT16H-CNB-37S	GT11H-C30-37P (3m) GT11H-C60-37P (6m) GT11H-C100-37P (10m)			
KV-700 KV-1000 KV-3000 KV-5000 KV-5500	KV-LE20V KV-LE21V		GT16H-CNB-42S	GT14H-C30-42P (3m) GT14H-C60-42P (6m) GT14H-C100-42P (10m)			
			GT16H-CNB-37S	GT11H-C30-37P (3m) GT11H-C60-37P (6m) GT11H-C100-37P (10m)			

*1 The destination connected with the twisted pair cable varies with the configuration of the applicable Ethernet network system. Connect to the Ethernet module, hub, transceiver or other system equipment corresponding to the applicable Ethernet network system.
Use cables, connectors, and hubs that meet the IEEE802.3 10BASE-T/100BASE-TX standard.

*2 A length between a hub and a node.
The maximum distance differs depending on the Ethernet device to be used.
The following shows the number of the connectable nodes when a repeater hub is used.
• 10BASE-T: Max. 4 nodes for a cascade connection (500m)
• 100BASE-TX: Max. 2 nodes for a cascade connection (205m)
When switching hubs are used, the cascade connection between the switching hubs has no logical limit for the number of cascades.
For the limit, contact the switching hub manufacturer.

*3 Product manufactured by KEYENCE CORPORATION. For details of the product, contact KEYENCE CORPORATION.

*4 Use C or later version of GT11H-C□□-37P.

35.3.2 GOT side settings

■ Setting communication interface (Communication settings)

Set the channel of the connected equipment.

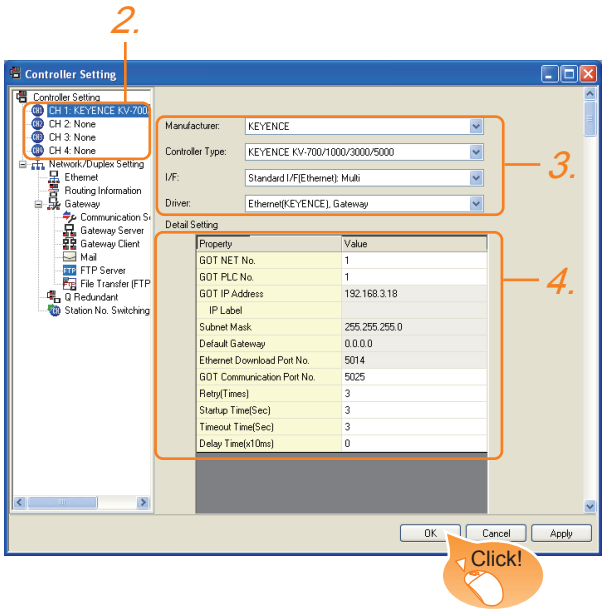

1. Select [Common] → [Controller Setting] from the menu.
2. The Controller Setting window is displayed. Select the channel to be used from the list menu.
3. Set the following items.
   - Manufacturer: KEYENCE
   - Controller Type: KEYENCE KV-700/1000/3000/5000
   - I/F: Interface to be used
   - Driver: Ethernet (KEYENCE), Gateway
4. The detailed setting is displayed after Manufacturer, Controller Type, I/F, and Driver are set.
   Make the settings according to the usage environment.
   35.3.2 ■ Communication detail settings

Click the OK button when settings are completed.

POINT

The settings of connecting equipment can be confirmed in [I/F Communication Setting].
For details, refer to the following.
18.1.2 I/F communication setting

■ Communication detail settings

Make the settings according to the usage environment.

Item	Description	Range
GOT NET No.	Set the network No. of the GOT. (Default: 1)	1 to 239
GOT PLC No.*1	Set the station No. of the GOT. (Default: 1)	1 to 254
GOT IP Address	Set the IP address of the GOT. (Default: 192.168.0.18)	0.0.0.0 to 255.255.255.255
Subnet Mask	Set the subnet mask for the sub network. (Only for connection via router) If the sub network is not used, the default value is set. (Default: 255.255.255.0)	0.0.0.0 to 255.255.255.255
Default Gateway	Set the router address of the default gateway where the GOT is connected. (Only for connection via router) (Default: 0.0.0.0)	0.0.0.0 to 255.255.255.255
Ethernet Download Port No.	Set the GOT port No. for Ethernet download. (Default: 5014)	1024 to 5010, 5014 to 65534 (Except for 5011, 5012 and 5013)
GOT Communication Port No.	Set the GOT port No. for the connection with the Ethernet module. (Default: 5025)	1024 to 5010, 5014 to 65534 (Except for 5011, 5012, 5013, and 49153)
Retry	Set the number of retries to be performed when a communication timeout occurs. When receiving no response after retries, the communication times out. (Default: 3times)	0 to 5times
Startup Time	Specify the time period from the GOT startup until GOT starts the communication with the PLC CPU. (Default: 3sec)	3 to 255 sec
Timeout Time	Set the time period for a communication to time out. (Default: 3sec)	3 to 90sec
Delay Time	Set the delay time for reducing the load of the network/destination PLC. (Default: 0ms)	0 to 10000 (× 10 ms)

*1 Each of [GOT PLC No.] set in the communication detail setting and [PLC No.] set in the Ethernet setting must be set to different station numbers.
35.3.2 ■ Ethernet setting

■ Ethernet setting

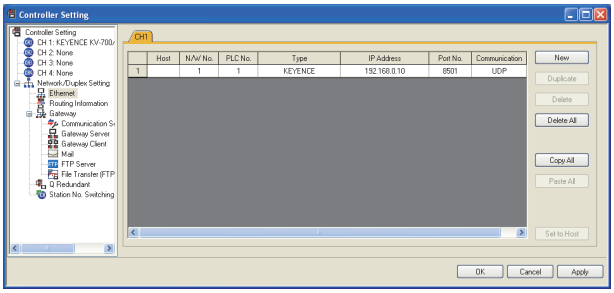

Item	Description	Set value
Host	The host is displayed. (The host is indicated with an asterisk (*).)	-
N/W No.	Set the network No. of the connected Ethernet module. (Default: blank)	1 to 239
PLC No.*1	Set the station No. of the connected Ethernet module. (Default: blank)	1 to 254
Controller Type	KEYENCE (fixed)	KEYENCE (fixed)
IP Address	Set the IP address of the connected Ethernet module. (Default: 192.168.0.10)	PLC side IP address
Port No.	Set the port No. of the connected Ethernet module. (Default: 8501)	PLC side port No.
Communication	UDP, TCP (Default: UDP)	Adjust the settings with the PLC settings.

*1 Each of [GOT PLC No.] set in the communication detail setting and [PLC No.] set in the Ethernet setting must be set to different station numbers.

35.3.2 ■ Communication detail settings

POINT

(1) Communication interface setting by Utility
The communication interface setting can be changed on the Utility's [Communication setting] after writing [Communication Settings] of project data.
For details on the Utility, refer to the following manual.

11. COMMUNICATION INTERFACE SETTING (COMMUNICATION SETTING)

(2) Precedence in communication settings
When settings are made by GT Designer3 or the Utility, the latest setting is effective.

35.3.3 PLC side setting

POINT

KEYENCE PLC
For details of KEYENCE PLC, refer to the following manual.

KEYENCE PLC user's Manual

■ Setting of KV-LE21V/LE20V

Set the IP address and port No. by the unit editor of KV STUDIO.

Item	Description	Range
Communication mode	Ethernet	-
IP Address*1	Set the IP address.	0.0.0.0 to 255.255.255.255
Port No.*1 (Host link)	Set the port No.	256 to 65534

*1 Adjust the settings with the Ethernet settings of the GOT side.

35.3.2 ■ Ethernet setting

35.4 Device Range that Can Be Set

For details on the device range of controllers that can be used on GT14 Handy, refer to the following manuals.

☞ GT Designer3 Version1 Screen Design Manual (Fundamentals)

☞ GOT1000 Series Connection Manual (Non-Mitsubishi Products 1) for GT Works3

36. CONNECTION TO KOYO EI PLC

36.1 Connectable Model List

The following table shows the connectable models.

Series	Model	Clock*1	Communication type	GT14 Handy	Refer to
KOSTAC SU Series	SU-5E	×	RS-232 RS-422	○	36.2.1
	SU-6B	○			
	SU-5M	○	RS-232 RS-422	○	
	SU-6M	○			
DirectLOGIC 05 Series	D0-05AA	×	RS-232 RS-422	○	36.2.2
	D0-05AD	×			
	D0-05AR	×			
	D0-05DA	×			
	D0-05DD	×			
	D0-05DD-D	×			
	D0-05DR	×			
	D0-05DR-D	×			
DirectLOGIC 06 Series	D0-06DD1	○	RS-232 RS-422	○	36.2.2
	D0-06DD2	○			
	D0-06DR	○			
	D0-06DA	○			
	D0-06AR	○			
	D0-06AA	○			
	D0-06DD1-D	○			
	D0-06DD2-D	○			
	D0-06DR-D	○			
DirectLOGIC 205 Series	D2-240	○	RS-232 RS-422	○	36.2.3
	D2-250-1	○			
	D2-260	○			
PZ series	PZ3	×	RS-232 RS-422	○	36.2.4

*1 The GOT can only read the clock data. In the clock setting, though the adjust is available, the broadcast is not available.

36.2 System Configuration

36.2.1 Connecting to SU-5E, SU-6B, SU-5M, or SU-6M

Communication driver

KOYO KOSTAC/DL

■ When connecting to one PLC

(1) When using the connector conversion box

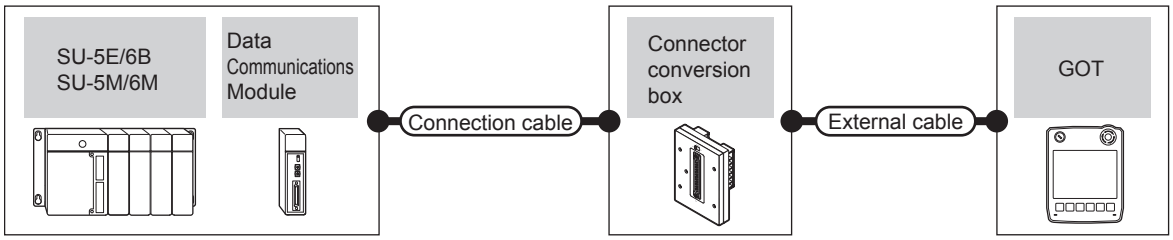

PLC			Connection cable	Connector conversion box	External cable	GOT model	Total distance	Number of connectable equipment
Model	Data communications module*1	Communication type	Cable model Connection diagram number					
SU-5E/6B (general communication port) SU-5M/6M (general communication port 1)	-	RS-232	User preparing RS232 connection diagram 1)	GT11H-CNB-37S	GT11H-C30-37P(3m)	GT14 Handy	6m	1 PLC for 1 GOT
SU-5E/6B (general communication port) SU-5M/6M (general communication port 1)	-	RS-422	User preparing RS422 connection diagram 1)	GT11H-CNB-37S	GT11H-C30-37P(3m) GT11H-C60-37P(6m) GT11H-C100-37P(10m)	GT14 Handy	13m	
SU-5M/6M (general communication port 2)	-	RS-232	Z20P (Programmable connection cable) + S-9CNS1(Conversion connector)*1	GT11H-CNB-37S	GT11H-C30-37P(3m)	GT14 Handy	6m	
SU-5M/6M (general communication port 3)	-	RS-422	User preparing RS422 connection diagram 4)	GT11H-CNB-37S	GT11H-C30-37P(3m) GT11H-C60-37P(6m) GT11H-C100-37P(10m)	GT14 Handy	13m	
SU-5E/6B SU-5M/6M	U-01DM	RS-232	User preparing RS232 connection diagram 1)	GT11H-CNB-37S	GT11H-C30-37P(3m)	GT14 Handy	6m	1 data communication module for 1 GOT
SU-5E/6B SU-5M/6M	U-01DM	RS-422	User preparing RS422 connection diagram 7)	GT11H-CNB-37S	GT11H-C30-37P(3m) GT11H-C60-37P(6m) GT11H-C100-37P(10m)	GT14 Handy	13m	

*1 Product manufactured by KOYO ELECTRONICS INDUSTRIES CO., LTD. For details of the product, contact KOYO ELECTRONICS INDUSTRIES CO., LTD.

(2) When using the external cable (GT11H-C□□□-37P)

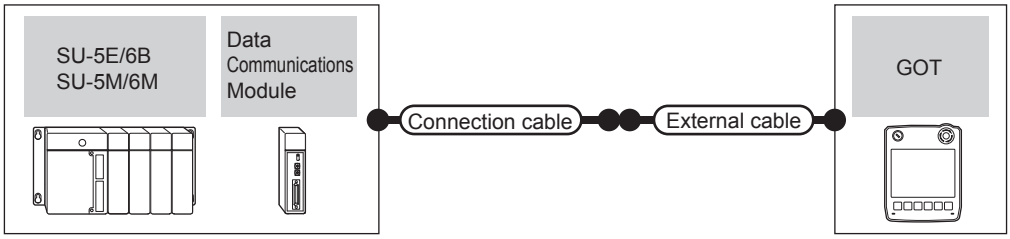

PLC			Connection cable	External cable	GOT model	Total distance	Number of connectable equipment
Model	Data communications module*1	Communication type	Cable model Connection diagram number				
SU-5E/6B (general communication port)	-	RS-232	User preparing RS232 connection diagram 2)	GT11H-C30-37P(3m)	GT14 Handy	6m	1 PLC for 1 GOT
SU-5M/6M (general communication port 1)							
SU-5E/6B (general communication port)	-	RS-422	User preparing RS422 connection diagram 2)	GT11H-C30-37P(3m) GT11H-C60-37P(6m) GT11H-C100-37P(10m)	GT14 Handy	13m	
SU-5M/6M (general communication port 1)							
SU-5M/6M (general communication port 3)	-	RS-422	User preparing RS422 connection diagram 5)	GT11H-C30-37P(3m) GT11H-C60-37P (6m) GT11H-C100-37P(10m)	GT14 Handy	13m	
SU-5E/6B	U-01DM	RS-232	User preparing RS232 connection diagram 2)	GT11H-C30-37P(3m)	GT14 Handy	6m	1 data communication module for 1 GOT
SU-5M/6M							
SU-5E/6B	U-01DM	RS-422	User preparing RS422 connection diagram 8)	GT11H-C30-37P(3m) GT11H-C60-37P(6m) GT11H-C100-37P(10m)	GT14 Handy	13m	
SU-5M/6M							

*1 Product manufactured by KOYO ELECTRONICS INDUSTRIES CO., LTD. For details of the product, contact KOYO ELECTRONICS INDUSTRIES CO., LTD.

(3) When using the external cable (GT11H-C□□□)

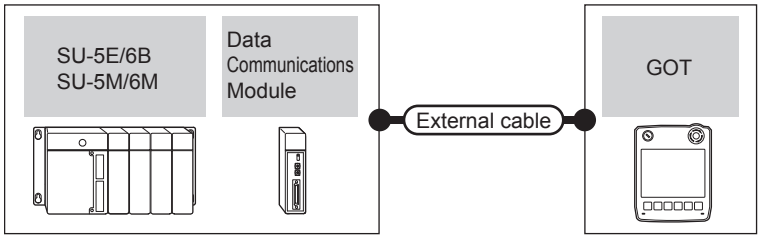

PLC			External cable	GOT model	Total distance	Number of connectable equipment
Model	Data communications module*1	Communication type				
SU-5E/6B (general communication port)	-	RS-232	GT11H-C30(3m) GT11H-C60(6m) User preparing RS232 connection diagram 3)	GT14 Handy	6m	1 PLC for 1 GOT
SU-5M/6M (general communication port 1)						
SU-5E/6B (general communication port)	-	RS-422	GT11H-C30(3m) GT11H-C60(6m) GT11H-C100(10m) User preparing RS422 connection diagram 3)	GT14 Handy	13m	
SU-5M/6M (general communication port 1)						
SU-5M/6M (general communication port 3)	-	RS-422	GT11H-C30(3m) GT11H-C60 (6m) GT11H-C100(10m) User preparing RS422 connection diagram 6)	GT14 Handy	13m	
SU-5E/6B	U-01DM	RS-232	GT11H-C30(3m) GT11H-C60(6m) User preparing RS232 connection diagram 3)	GT14 Handy	6m	1 data communication module for 1 GOT
SU-5M/6M						
SU-5E/6B	U-01DM	RS-422	GT11H-C30(3m) GT11H-C60 (6m) GT11H-C100(10m) User preparing RS422 connection diagram 9)	GT14 Handy	13m	
SU-5M/6M						

*1 Product manufactured by KOYO ELECTRONICS INDUSTRIES CO., LTD. For details of the product, contact KOYO ELECTRONICS INDUSTRIES CO., LTD.

■ When connecting to multiple PLCs

Communication driver

KOYO KOSTAC/DL

(1) When using the connector conversion box

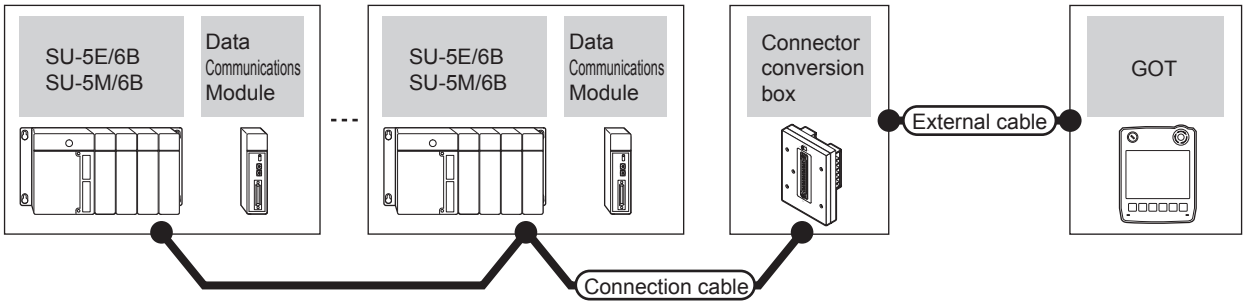

PLC			Connection cable	Connector conversion box	External cable	GOT model	Total distance	Number of connectable equipment
Model	Data communications module*1	Communication type	Cable model Connection diagram number					
SU-5E/6B SU-5M/6M (general communication port 1)	-	RS-422	User preparing RS422 connection diagram 13)	GT11H-CNB-37S	GT11H-C30-37P(3m) GT11H-C60-37P(6m) GT11H-C100-37P(10m)	GT14 Handy	13m	90 PLCs for 1 GOT*2
SU-5M/6M (general communication port 3)	-	RS-422	User preparing RS422 connection diagram 16)			GT14 Handy	13m	90 PLCs for 1 GOT*2
SU-5E/6B SU-5M/6M	U-01DM	RS-422	User preparing RS422 connection diagram 19)			GT14 Handy	13m	90 PLCs for 1 GOT*2

*1 Product manufactured by KOYO ELECTRONICS INDUSTRIES CO., LTD. For details of the product, contact KOYO ELECTRONICS INDUSTRIES CO., LTD.

*2 When the number of links exceeds 30, use a transmission line conversion unit D-01CV per 30 links. For details, refer to the following manual.

KOYO EI PLC user's Manual

(2) When using the external cable (GT11H-C□□□-37P)

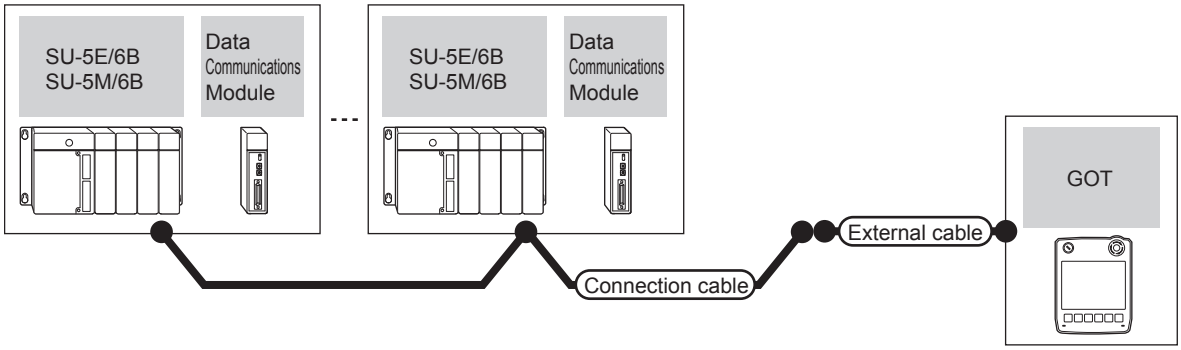

PLC			Connection cable	External cable	GOT model	Total distance	Number of connectable equipment
Model	Data communications module*1	Communication type	Cable model Connection diagram number				
SU-5E/6B	-	RS-422	User preparing RS422 connection diagram 14)	GT11H-C30-37P(3m) GT11H-C60-37P(6m) GT11H-C100-37P(10m)	GT14 Handy	13m	90 PLCs for 1 GOT*2
SU-5M/6M (general communication port 1)							
SU-5M/6M (general communication port 3)	-	RS-422	User preparing RS422 connection diagram 17)				
SU-5E/6B	U-01DM	RS-422	User preparing RS422 connection diagram 20)				
SU-5M/6M							

*1 Product manufactured by KOYO ELECTRONICS INDUSTRIES CO., LTD. For details of the product, contact KOYO ELECTRONICS INDUSTRIES CO., LTD.

*2 When the number of links exceeds 30, use a transmission line conversion unit D-01CV per 30 links. For details, refer to the following manual.

KOYO EI PLC user's Manual

(3) When using the external cable (GT11H-C□□□)

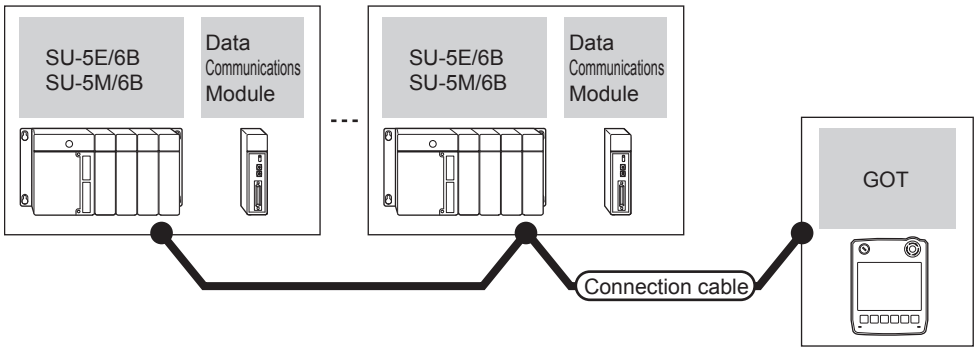

PLC			External cable	GOT model	Total distance	Number of connectable equipment
Model	Data communications module*1	Communication type				
SU-5E/6B	-	RS-422	GT11H-C30 (3m) GT11H-C60 (6m) GT11H-C100 (10m) User preparing RS422 connection diagram 15)	GT14 Handy	13m	90 PLCs for 1 GOT*2
SU-5M/6M (general communication port 1)						
SU-5M/6M (general communication port 3)	-	RS-422	GT11H-C30 (3m) GT11H-C60 (6m) GT11H-C100 (10m) User preparing RS422 connection diagram 18)			
SU-5E/6B	U-01DM	RS-422	GT11H-C30 (3m) GT11H-C60 (6m) GT11H-C100 (10m) User preparing RS422 connection diagram 21)			
SU-5M/6M						

*1 Product manufactured by KOYO ELECTRONICS INDUSTRIES CO., LTD. For details of the product, contact KOYO ELECTRONICS INDUSTRIES CO., LTD.

*2 When the number of links exceeds 30, use a transmission line conversion unit D-01CV per 30 links. For details, refer to the following manual.

KOYO EI PLC user's Manual

36.2.2 Connecting to DirectLOGIC 05 or DirectLOGIC 06 series

■ When connecting to one PLC

Communication driver

KOYO KOSTAC/DL

(1) When using the connector conversion box

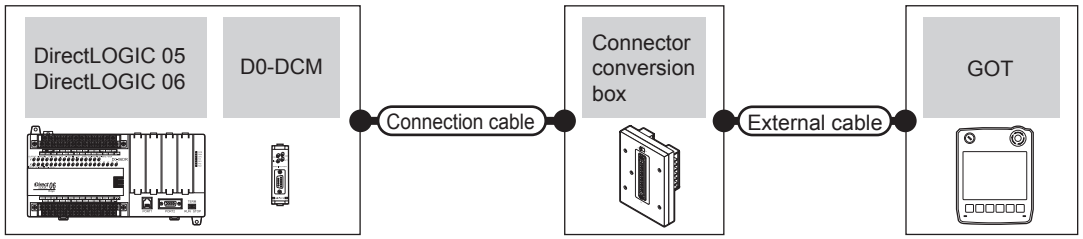

PLC			Connection cable	Connector conversion box	External cable	GOT model	Total distance	Number of connectable equipment
Model	Serial data communications module*1	Communication type	Cable model Connection diagram number					
Direct LOGIC 05 (communication port 1) (communication port 2)	-	RS-232	Z20P (Programmable connection cable) + S-9CNS1 (Conversion connector)*1	GT11H-CNB-37S	GT11H-C30-37P(3m)	GT14 Handy	6m	1 PLC for 1 GOT
Direct LOGIC 06 (communication port 1)								
Direct LOGIC 06 (communication port 2)	-	RS-232	User preparing RS232 connection diagram 4)	GT11H-CNB-37S	GT11H-C30-37P(3m)	GT14 Handy	6m	
	-	RS-422	User preparing RS422 connection diagram 10)	GT11H-CNB-37S	GT11H-C30-37P(3m) GT11H-C60-37P(6m) GT11H-C100-37P(10m)	GT14 Handy	13m	
Direct LOGIC 05	D0-DCM (port 1)	RS-232	Z20P (Programmable connection cable) + S-9CNS1 (Conversion connector)*1	GT11H-CNB-37S	GT11H-C30-37P(3m)	GT14 Handy	6m	1 serial data communication module for 1 GOT
Direct LOGIC 06								
Direct LOGIC 05	D0-DCM (port 2)	RS-232	User preparing RS232 connection diagram 4)	GT11H-CNB-37S	GT11H-C30-37P(3m)	GT14 Handy	6m	
Direct LOGIC 06								
Direct LOGIC 05	D0-DCM (port 2)	RS-422	User preparing RS422 connection diagram 10)	GT11H-CNB-37S	GT11H-C30-37P(3m) GT11H-C60-37P(6m) GT11H-C100-37P(10m)	GT14 Handy	13m	
Direct LOGIC 06								

*1 Product manufactured by KOYO ELECTRONICS INDUSTRIES CO., LTD. For details of the product, contact KOYO ELECTRONICS INDUSTRIES CO., LTD.

(2) When using the external cable (GT11H-C□□□-37P)

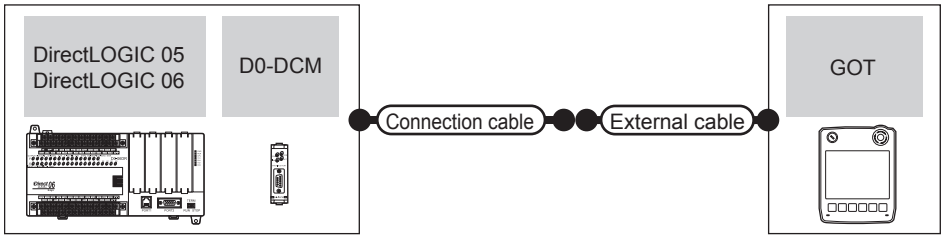

PLC			Connection cable	External cable	GOT model	Total distance	Number of connectable equipment
Model	Serial data communications module*1	Communication type	Cable model Connection diagram number				
Direct LOGIC 06 (communication port 2)	-	RS-232	User preparing RS232 connection diagram 5)	GT11H-C30-37P(3m)	GT14 Handy	6m	1 PLC for 1 GOT
	-	RS-422	User preparing RS422 connection diagram 11)	GT11H-C30-37P(3m) GT11H-C60-37P(6m) GT11H-C100-37P(10m)	GT14 Handy	13m	
Direct LOGIC 05	D0-DCM (port 2)	RS-232	User preparing RS232 connection diagram 5)	GT11H-C30-37P(3m)	GT14 Handy	6m	1 serial data communication module for 1 GOT
Direct LOGIC 06							
Direct LOGIC 05	D0-DCM (port 2)	RS-422	User preparing RS422 connection diagram 11)	GT11H-C30-37P(3m) GT11H-C60-37P(6m) GT11H-C100-37P(10m)	GT14 Handy	13m	
Direct LOGIC 06							

*1 Product manufactured by KOYO ELECTRONICS INDUSTRIES CO., LTD. For details of the product, contact KOYO ELECTRONICS INDUSTRIES CO., LTD.

(3) When using the external cable (GT11H-C□□□)

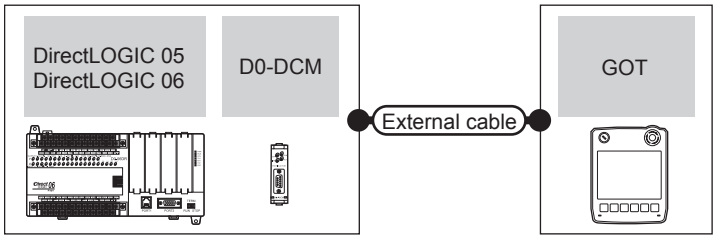

PLC			External cable	GOT model	Total distance	Number of connectable equipment
Model	Serial data communications module*1	Communication type				
Direct LOGIC 06 (communication port 2)	-	RS-232	GT11H-C30 (3m) GT11H-C60 (6m) User preparing RS232 connection diagram 6)	GT14 Handy	6m	1 PLC for 1 GOT
	-	RS-422	GT11H-C30 (3m) GT11H-C60 (6m) GT11H-C100 (10m) User preparing RS422 connection diagram 12)	GT14 Handy	13m	
Direct LOGIC 05	D0-DCM (port 2)	RS-232	GT11H-C30 (3m) GT11H-C60 (6m) User preparing RS232 connection diagram 6)	GT14 Handy	6m	1 serial data communication module for 1 GOT
Direct LOGIC 06						
Direct LOGIC 05	D0-DCM (port 2)	RS-422	GT11H-C30 (3m) GT11H-C60 (6m) GT11H-C100 (10m) User preparing RS422 connection diagram 12)	GT14 Handy	13m	
Direct LOGIC 06						

*1 Product manufactured by KOYO ELECTRONICS INDUSTRIES CO., LTD. For details of the product, contact KOYO ELECTRONICS INDUSTRIES CO., LTD.

■ When connecting to multiple PLCs

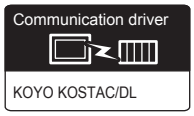

(1) When using the connector conversion box

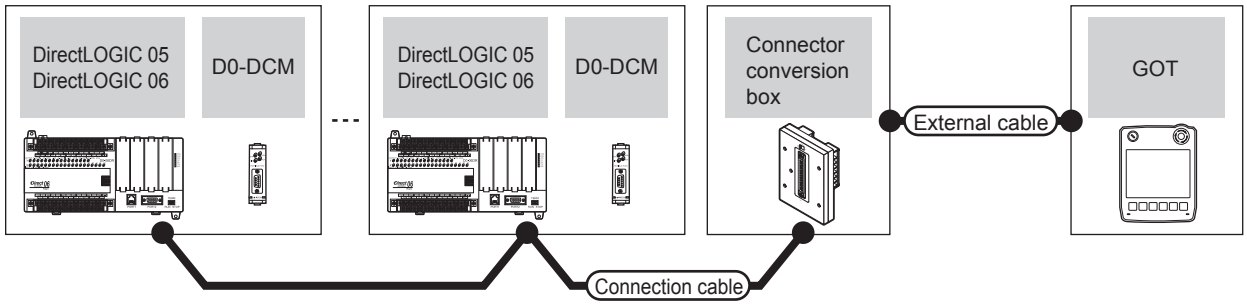

PLC			Connection cable	Connector conversion box	External cable	GOT model	Total distance	Number of connectable equipment
Model	Serial communication module *1	Communication type	Cable model Connection diagram number					
Direct LOGIC 06 (communication port 2)	-	RS-422	User preparing RS422 connection diagram 22)	GT11H-CNB-37S	GT11H-C30-37P (3m) GT11H-C60-37P (6m) GT11H-C100-37P (10m)	GT14 Handy	13m	90 PLCs for 1 GOT *2
Direct LOGIC 05	D0-DCM (port 2)							
Direct LOGIC 06								

*1 Product manufactured by KOYO ELECTRONICS INDUSTRIES CO., LTD. For details of the product, contact KOYO ELECTRONICS INDUSTRIES CO., LTD.

*2 When the number of links exceeds 30, use a transmission line conversion unit D-01CV per 30 links.
For details, refer to the following manual.

KOYO EI PLC user's Manual

(2) When using the external cable (GT11H-C□□□-37P)

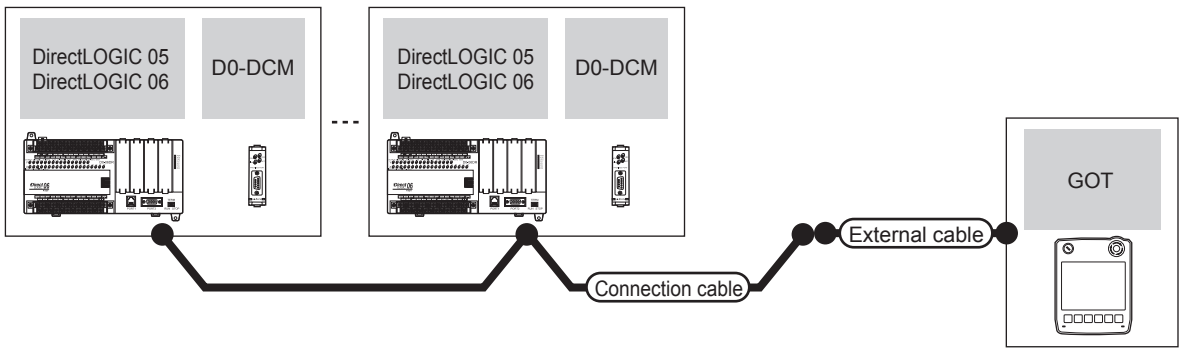

PLC			Connection cable	External cable	GOT model	Total distance	Number of connectable equipment
Model	Serial communication module *1	Communication type	Cable model Connection diagram number				
Direct LOGIC 06 (communication port 2)	-	RS-422	User preparing RS422 connection diagram 23)	GT11H-C30-37P (3m) GT11H-C60-37P (6m) GT11H-C100-37P (10m)	GT14 Handy	13m	90 PLCs for 1 GOT *2
Direct LOGIC 05	D0-DCM (port 2)						
Direct LOGIC 06							

*1 Product manufactured by KOYO ELECTRONICS INDUSTRIES CO., LTD. For details of the product, contact KOYO ELECTRONICS INDUSTRIES CO., LTD.

*2 When the number of links exceeds 30, use a transmission line conversion unit D-01CV per 30 links.
For details, refer to the following manual.

KOYO EI PLC user's Manual

(3) When using the external cable (GT11H-C□□□)

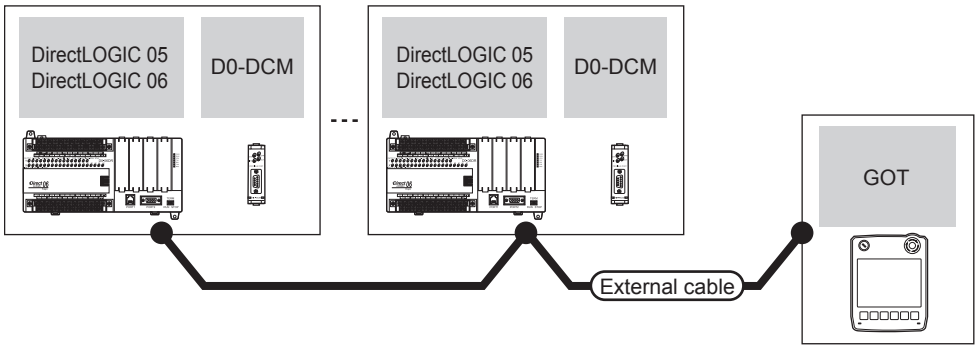

PLC			External cable	GOT model	Total distance	Number of connectable equipment
Model	Serial communication module*1	Communication type				
Direct LOGIC 06 (communication port 2)	-	RS-422	GT11H-C30 (3m) GT11H-C60 (6m) GT11H-C100 (10m) User preparing RS422 connection diagram 24)	GT14 Handy	13m	90 PLCs for 1 GOT *2
Direct LOGIC 05	D0-DCM (port 2)					
Direct LOGIC 06						

*1 Product manufactured by KOYO ELECTRONICS INDUSTRIES CO., LTD. For details of the product, contact KOYO ELECTRONICS INDUSTRIES CO., LTD.

*2 When the number of links exceeds 30, use a transmission line conversion unit D-01CV per 30 links. For details, refer to the following manual.

KOYO EI PLC user's Manual

36.2.3 Connecting to D2-240, D2-250-1 or D2-260

■ When connecting to one PLC

Communication driver

KOYO KOSTAC/DL

(1) When using the connector conversion box

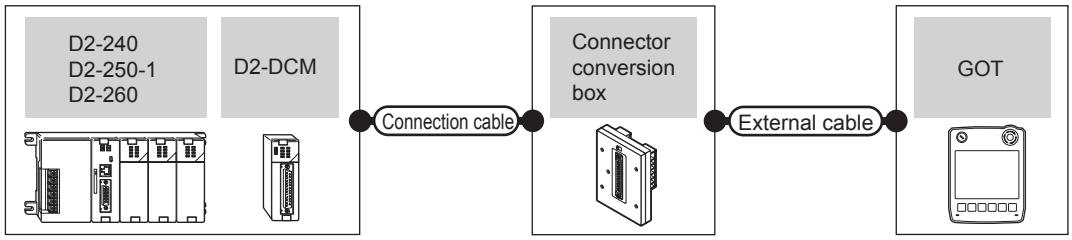

PLC			Connection cable	Connector conversion box	External cable	GOT model	Total distance	Number of connectable equipment
Model	Data communications module*1	Communication type	Cable model Connection diagram number					
D2-240 D2-250-1 D2-260 (communication port 2)	-	RS-232	User preparing RS232 connection diagram 4)	GT11H-CNB-37S	GT11H-C30-37P(3m)	GT14 Handy	6m	1 PLC for 1 GOT
D2-250-1 D2-260 (communication port 2)	-	RS-422	User preparing RS422 connection diagram 10)	GT11H-CNB-37S	GT11H-C30-37P(3m) GT11H-C60-37P(6m) GT11H-C100-37P(10m)	GT14 Handy	13m	
D2-240 D2-250-1 D2-260	D2-DCM	RS-232	User preparing RS232 connection diagram 1)	GT11H-CNB-37S	GT11H-C30-37P(3m)	GT14 Handy	6m	1 data communication module for 1 GOT
		RS-422	User preparing RS422 connection diagram 7)	GT11H-CNB-37S	GT11H-C30-37P(3m) GT11H-C60-37P(6m) GT11H-C100-37P(10m)	GT14 Handy	13m	

*1 Product manufactured by KOYO ELECTRONICS INDUSTRIES CO., LTD. For details of the product, contact KOYO ELECTRONICS INDUSTRIES CO., LTD.

(2) When using the external cable (GT11H-C□□□-37P)

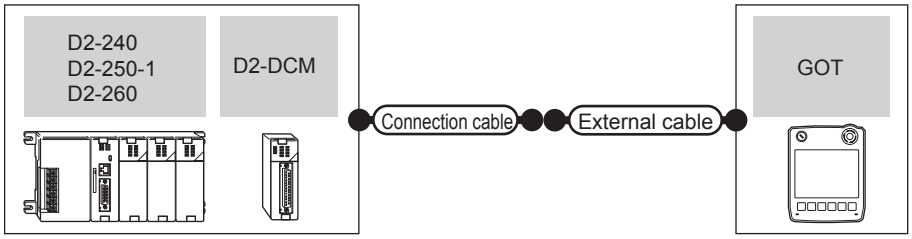

PLC			Connection cable	External cable	GOT model	Total distance	Number of connectable equipment
Model	Data communications module*1	Communication type	Cable model Connection diagram number				
D2-240 D2-250-1 D2-260 (communication port 2)	-	RS-232	User preparing RS232 connection diagram 5)	GT11H-C30-37P(3m)	GT14 Handy	6m	1 PLC for 1 GOT
D2-250-1 D2-260 (communication port 2)	-	RS-422	User preparing RS422 connection diagram 11)	GT11H-C30-37P(3m) GT11H-C60-37P(6m) GT11H-C100-37P(10m)	GT14 Handy	13m	
D2-240 D2-250-1 D2-260	D2-DCM	RS-232	User preparing RS232 connection diagram 2)	GT11H-C30-37P(3m)	GT14 Handy	6m	1 data communication module for 1 GOT
		RS-422	User preparing RS422 connection diagram 8)	GT11H-C30-37P(3m) GT11H-C60-37P(6m) GT11H-C100-37P(10m)	GT14 Handy	13m	

*1 Product manufactured by KOYO ELECTRONICS INDUSTRIES CO., LTD. For details of the product, contact KOYO ELECTRONICS INDUSTRIES CO., LTD.

(3) When using the external cable (GT11H-C□□□)

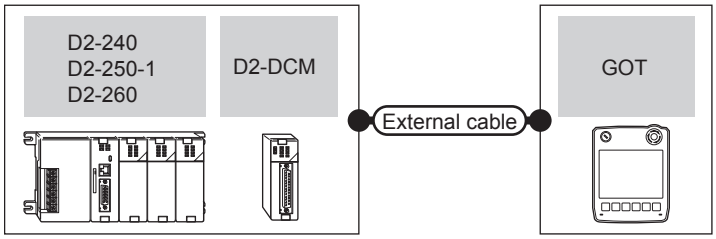

PLC			External cable	GOT model	Total distance	Number of connectable equipment
Model	Data communications module*1	Communication type				
D2-240 D2-250-1 D2-260 (communication port 2)	-	RS-232	GT11H-C30(3m) GT11H-C60(6m) User preparing RS232 connection diagram 6)	GT14 Handy	6m	1 PLC for 1 GOT
D2-250-1 D2-260 (communication port 2)	-	RS-422	GT11H-C30 (3m) GT11H-C60 (6m) GT11H-C100 (10m) User preparing RS422 connection diagram 12)	GT14 Handy	13m	
D2-240 D2-250-1 D2-260	D2-DCM	RS-232	GT11H-C30 (3m) GT11H-C60 (6m) User preparing RS232 connection diagram 3)	GT14 Handy	6m	1 data communication module for 1 GOT
		RS-422	GT11H-C30 (3m) GT11H-C60 (6m) GT11H-C100 (10m) User preparing RS422 connection diagram 9)	GT14 Handy	13m	

*1 Product manufactured by KOYO ELECTRONICS INDUSTRIES CO., LTD. For details of the product, contact KOYO ELECTRONICS INDUSTRIES CO., LTD.

■ When connecting to multiple PLCs

Communication driver
KOYO KOSTAC/DL

(1) When using the connector conversion box

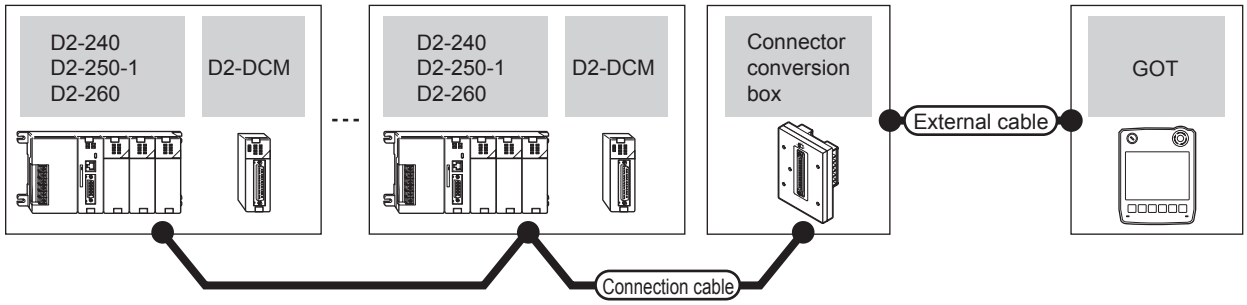

PLC			Connection cable	Connector conversion box	External cable	GOT model	Total distance	Number of connectable equipment
Model	Data communications module*1	Communication type	Cable model Connection diagram number					
D2-250-1 D2-260 (communication port 2)	-	RS-422	User preparing RS422 connection diagram 22)	GT11H-CNB-37S	GT11H-C30-37P(3m) GT11H-C60-37P(6m) GT11H-C100-37P(10m)	GT14 Handy	13m	90 PLCs for 1 GOT*2
D2-240 D2-250-1 D2-260	D2-DCM	RS-422	User preparing RS422 connection diagram 19)					

*1 Product manufactured by KOYO ELECTRONICS INDUSTRIES CO., LTD. For details of the product, contact KOYO ELECTRONICS INDUSTRIES CO., LTD.

*2 When the number of links exceeds 30, use a transmission line conversion unit D-01CV per 30 links. For details, refer to the following manual.

KOYO EI PLC user's Manual

(2) When using the external cable (GT11H-C□□□-37P)

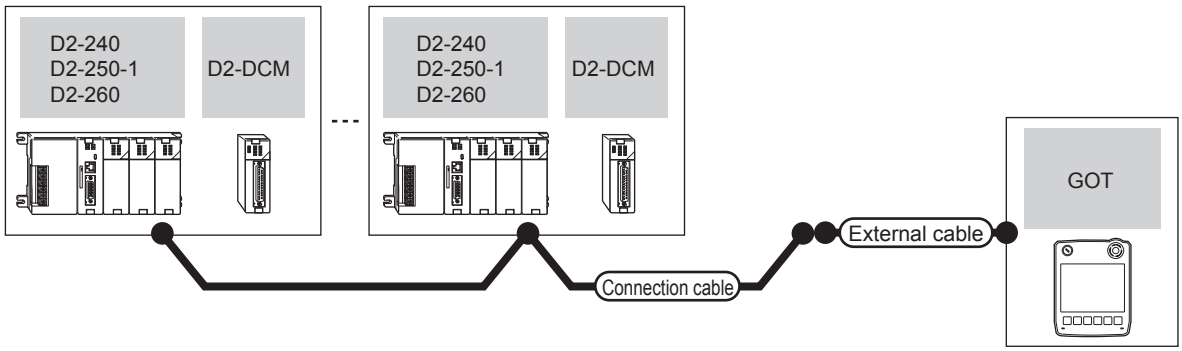

PLC			Connection cable	External cable	GOT model	Total distance	Number of connectable equipment
Model	Data communications module*1	Communication type	Cable model Connection diagram number				
D2-250-1 D2-260 (communication port 2)	-	RS-422	User preparing RS422 connection diagram 23)	GT11H-C30-37P(3m) GT11H-C60-37P(6m) GT11H-C100-37P(10m)	GT14 Handy	13m	90 PLCs for 1 GOT*2
D2-240 D2-250-1 D2-260	D2-DCM	RS-422	User preparing RS422 connection diagram 20)				

*1 Product manufactured by KOYO ELECTRONICS INDUSTRIES CO., LTD. For details of the product, contact KOYO ELECTRONICS INDUSTRIES CO., LTD.

*2 When the number of links exceeds 30, use a transmission line conversion unit D-01CV per 30 links. For details, refer to the following manual.

KOYO EI PLC user's Manual

(3) When using the external cable (GT11H-C□□□)

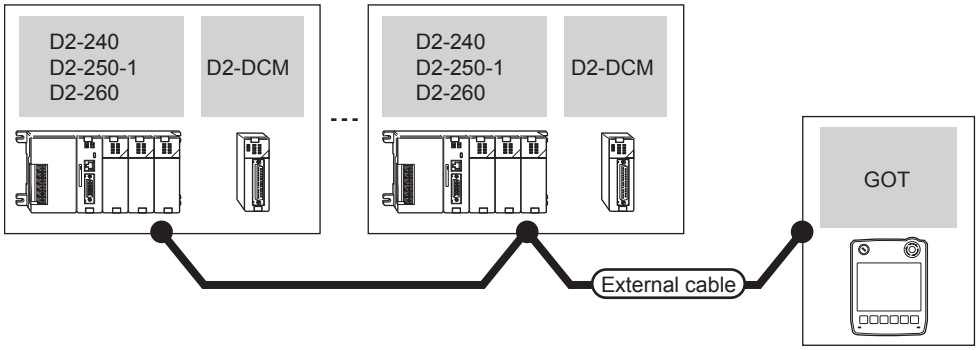

PLC			External cable	GOT model	Total distance	Number of connectable equipment
Model	Data communications module*1	Communication type				
D2-250-1 D2-260 (communication port 2)	-	RS-422	GT11H-C30(3m) GT11H-C60(6m) GT11H-C100(10m) User preparing RS422 connection diagram 24)	GT14 Handy	13m	90 PLCs for 1 GOT*2
D2-240 D2-250-1 D2-260	D2-DCM	RS-422	GT11H-C30(3m) GT11H-C60(6m) GT11H-C100(10m) User preparing RS422 connection diagram 21)			

*1 Product manufactured by KOYO ELECTRONICS INDUSTRIES CO., LTD. For details of the product, contact KOYO ELECTRONICS INDUSTRIES CO., LTD.

*2 When the number of links exceeds 30, use a transmission line conversion unit D-01CV per 30 links.
For details, refer to the following manual.

KOYO EI PLC user's Manual

36.2.4 Connecting to PZ

■ When connecting to one PLC

Communication driver

KOYO KOSTAC/DL

(1) When using the connector conversion box

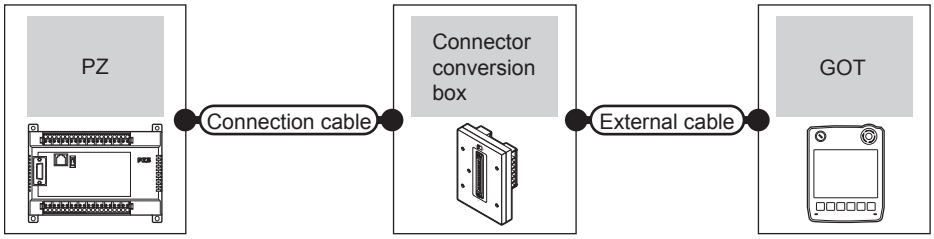

PLC		Connection cable	Connector conversion box	External cable	GOT model	Total distance	Number of connectable equipment
Model	Communication type	Cable model Connection diagram number					
PZ (general communication port 2)	RS-232	User preparing RS232 connection diagram 4)	GT11H-CNB-37S	GT11H-C30-37P(3m)	GT14 Handy	6m	1 PLC for 1 GOT
	RS-422	User preparing RS422 connection diagram 10)	GT11H-CNB-37S	GT11H-C30-37P(3m) GT11H-C60-37P(6m) GT11H-C100-37P(10m)	GT14 Handy	13m	

(2) When using the external cable (GT11H-C□□□-37P)

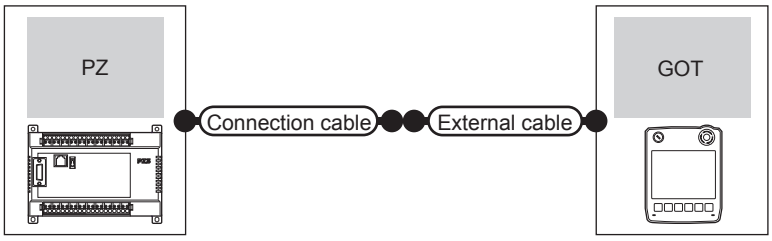

PLC		Connection cable	External cable	GOT model	Total distance	Number of connectable equipment
Model	Communication type	Cable model Connection diagram number				
PZ (general communication port 2)	RS-232	User preparing RS232 connection diagram 5)	GT11H-C30-37P(3m)	GT14 Handy	6m	1 PLC for 1 GOT
	RS-422	User preparing RS422 connection diagram 11)	GT11H-C30-37P(3m) GT11H-C60-37P(6m) GT11H-C100-37P(10m)	GT14 Handy	13m	

(3) When using the external cable (GT11H-C□□□)

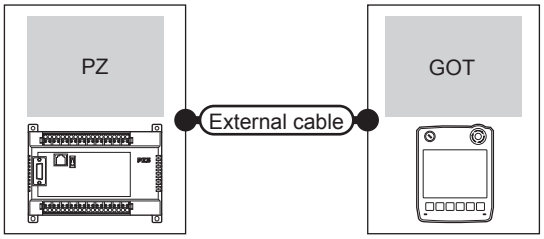

PLC		External cable	GOT model	Total distance	Number of connectable equipment
Model	Communication type				
PZ (general communication port 2)	RS-232	GT11H-C30(3m) GT11H-C60(6m) User preparing RS232 connection diagram 6)	GT14 Handy	6m	1 PLC for 1 GOT
	RS-422	GT11H-C30(3m) GT11H-C60(6m) GT11H-C100(10m) User preparing RS422 connection diagram 12)	GT14 Handy	13m	

■ When connecting to multiple PLCs

Communication driver

KOYO KOSTAC/DL

(1) When using the connector conversion box

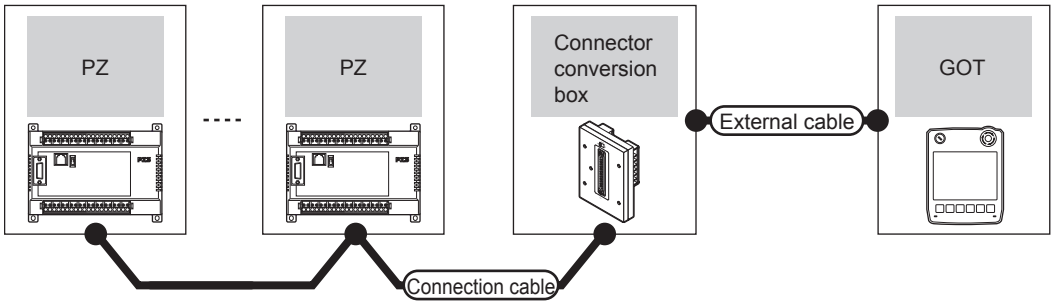

PLC		Connection cable	Connector conversion box	External cable	GOT model	Total distance	Number of connectable equipment
Model	Communication type	Cable model Connection diagram number					
PZ (general communication port 2)	RS-422	User preparing RS422 connection diagram 22)	GT11H-CNB-37S	GT11H-C30-37P(3m) GT11H-C60-37P(6m) GT11H-C100-37P(10m)	GT14 Handy	13m	90 PLCs for 1 GOT*1

*1 When the number of links exceeds 30, use a transmission line conversion unit D-01CV per 30 links.
For details, refer to the following manual.

KOYO EI PLC user's Manual

(2) When using the external cable (GT11H-C□□□-37P)

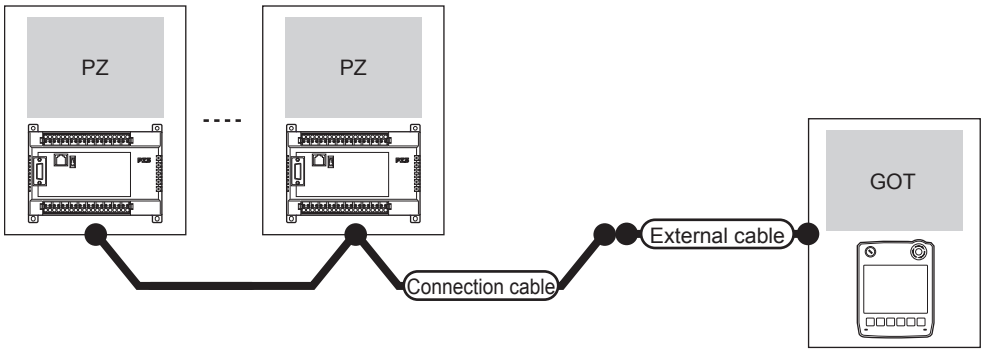

PLC		Connection cable	External cable	GOT model	Total distance	Number of connectable equipment
Model	Communication type	Cable model Connection diagram number				
PZ (general communication port 2)	RS-422	User preparing RS422 connection diagram 23)	GT11H-C30-37P(3m) GT11H-C60-37P(6m) GT11H-C100-37P(10m)	GT14 Handy	13m	90 PLCs for 1 GOT*1

*1 When the number of links exceeds 30, use a transmission line conversion unit D-01CV per 30 links.
For details, refer to the following manual.

KOYO EI PLC user's Manual

(3) When using the external cable (GT11H-C□□□)

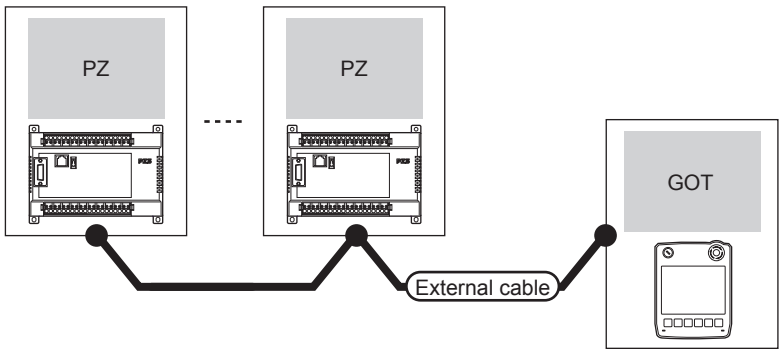

PLC		External cable	GOT model	Total distance	Number of connectable equipment
Model	Communication type				
PZ (general communication port 2)	RS-422	GT11H-C30(3m) GT11H-C60(6m) GT11H-C100(10m) User preparing RS422 connection diagram 24)	GT14 Handy	13m	90 PLCs for 1 GOT*1

*1 When the number of links exceeds 30, use a transmission line conversion unit D-01CV per 30 links.
For details, refer to the following manual.
KOYO EI PLC user's Manual

36.3 Connection Diagram

The following diagram shows the connection between the GOT and the PLC.

36.3.1 RS-232 cable

■ Connection diagram

RS232 connection diagram 1)

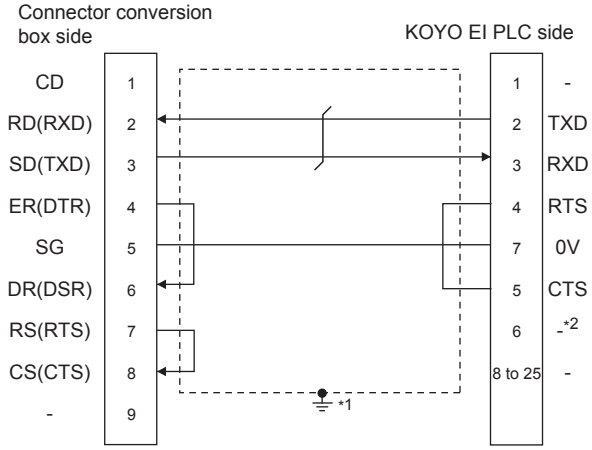

*1 Connect FG grounding to the appropriate part of a cable shield line.
*2 For U-01DM and D2-DCM, the signal name will be +5V.

RS232 connection diagram 2)

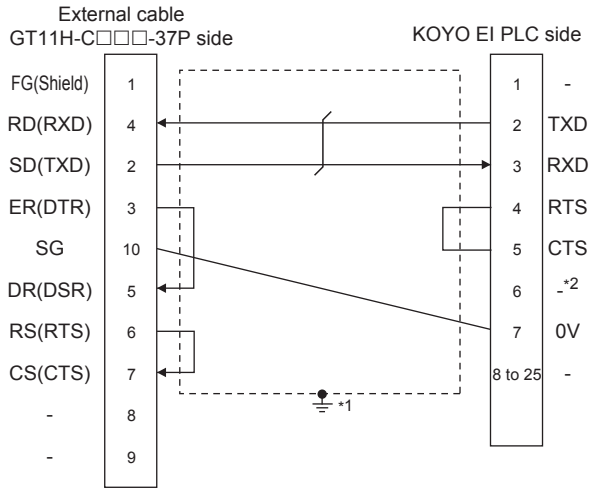

*1 Connect FG grounding to the appropriate part of a cable shield line.
*2 For U-01DM and D2-DCM, the signal name will be +5V.

RS232 connection diagram 3)

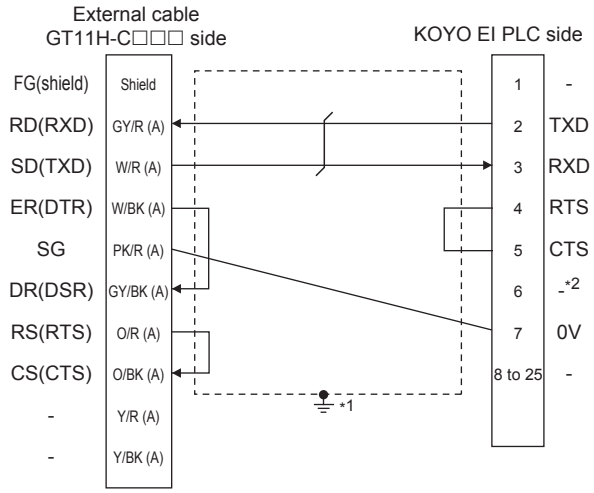

*1 Connect FG grounding to the appropriate part of a cable shield line.
*2 For U-01DM and D2-DCM, the signal name will be +5V.

RS232 connection diagram 4)

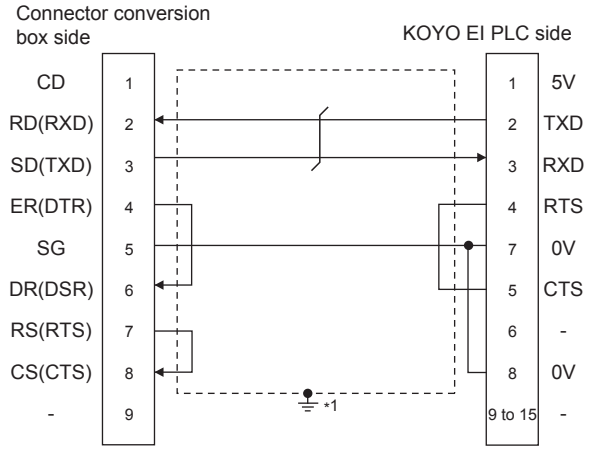

*1 Connect FG grounding to the appropriate part of a cable shield line.

RS232 connection diagram 5)

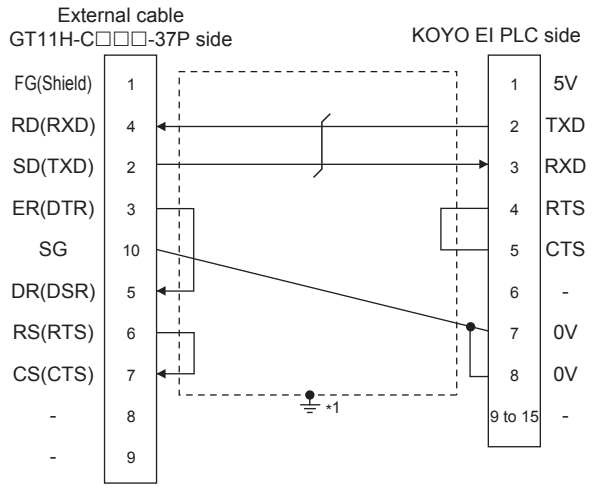

*1 Connect FG grounding to the appropriate part of a cable shield line.

RS232 connection diagram 6)

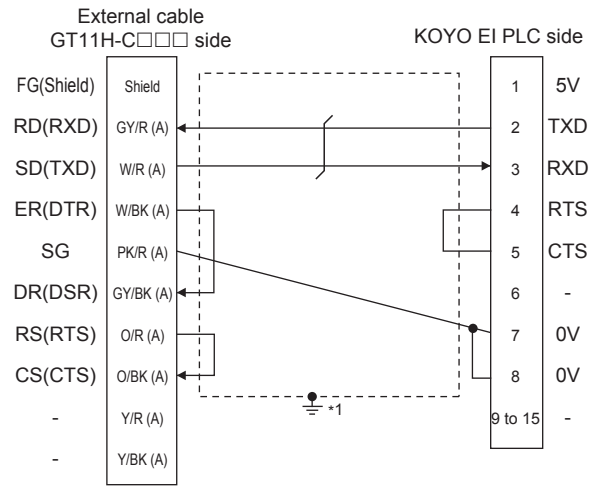

*1 Connect FG grounding to the appropriate part of a cable shield line.

■ Precautions when preparing a cable

(1) Cable length
The total distance (between the GOT and a controller) of RS-232 cable must be 6m or less.

(2) Connector conversion box side connector
For the connector conversion box side connector, refer to the following.

☞ 6.6 Connector Conversion Box

(3) External cable side connector
For the connector specifications of the external cable side, refer to the following.

☞ 8.2 External Cable, Relay Cable

(4) KOYO EI PLC side connector
Use the connector compatible with the KOYO EI PLC side.
For details, refer to the KOYO EI PLC user's manual.

36.3.2 RS-422 cable

■ Connection diagram

RS422 connection diagram 1)

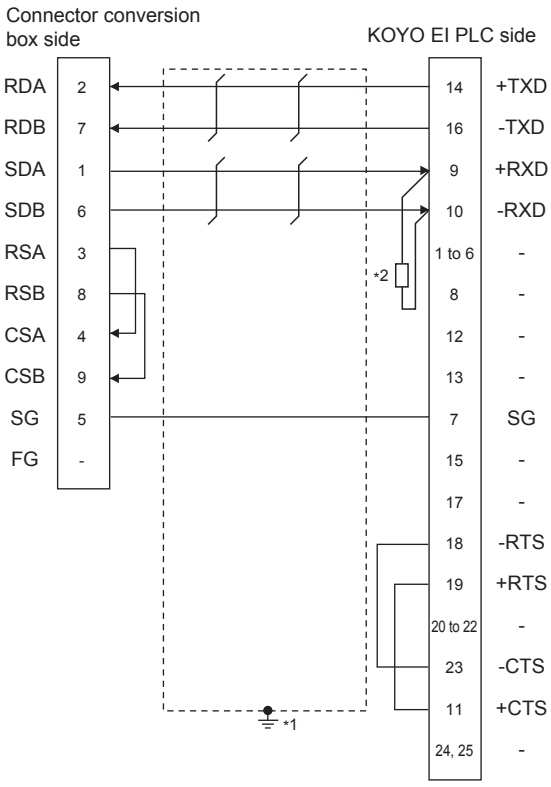

*1 Connect FG grounding to the appropriate part of a cable shield line.
*2 Connect a terminating resistor (approximately 150Ω) to the PLC at a terminal station.

RS422 connection diagram 2)

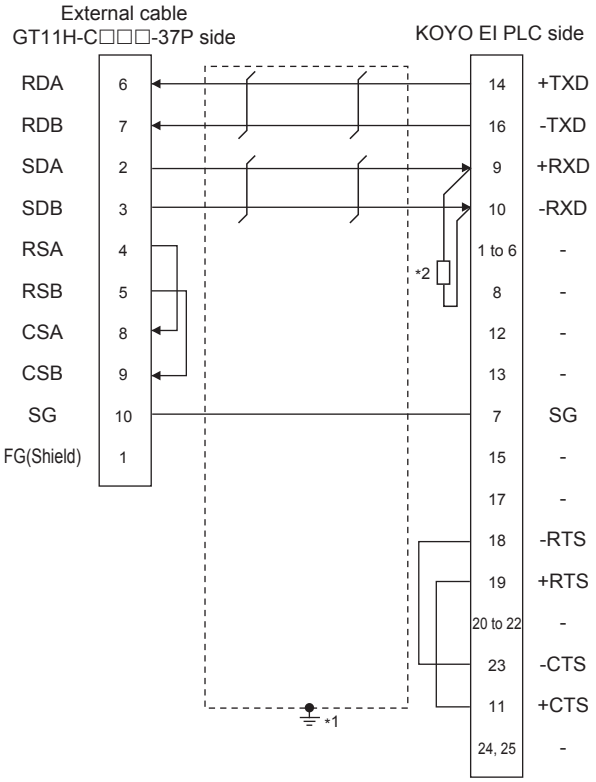

*1 Connect FG grounding to the appropriate part of a cable shield line.
*2 Connect a terminating resistor (approximately 150Ω) to the PLC at a terminal station.

RS422 connection diagram 3)

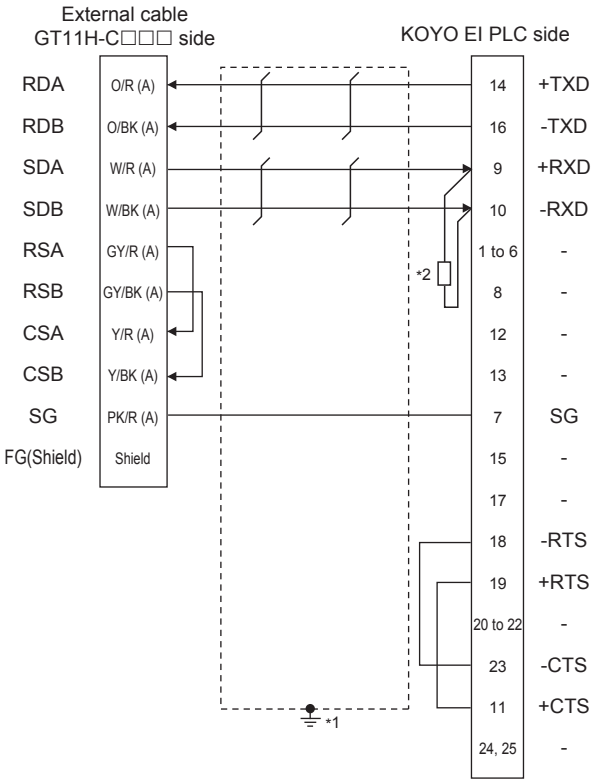

*1 Connect FG grounding to the appropriate part of a cable shield line.
*2 Connect a terminating resistor (approximately 150Ω) to the PLC at a terminal station.

RS422 connection diagram 4)

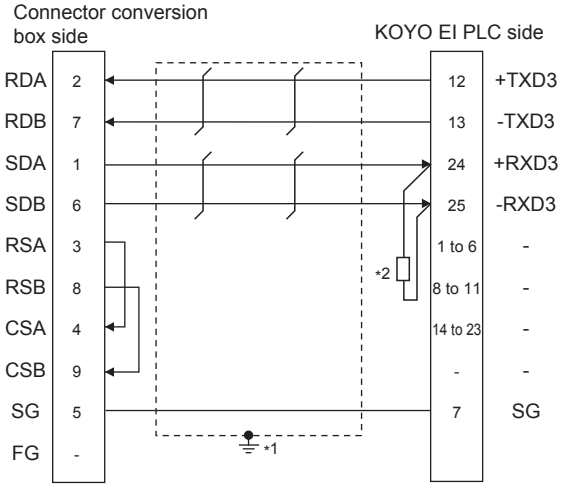

*1 Connect FG grounding to the appropriate part of a cable shield line.
*2 Connect a terminating resistor (approximately 150Ω) to the PLC at a terminal station.

RS422 connection diagram 5)

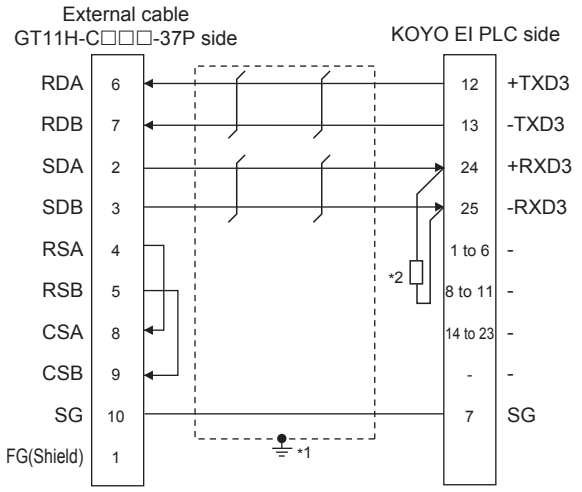

*1 Connect FG grounding to the appropriate part of a cable shield line.
*2 Connect a terminating resistor (approximately 150Ω) to the PLC at a terminal station.

RS422 connection diagram 6)

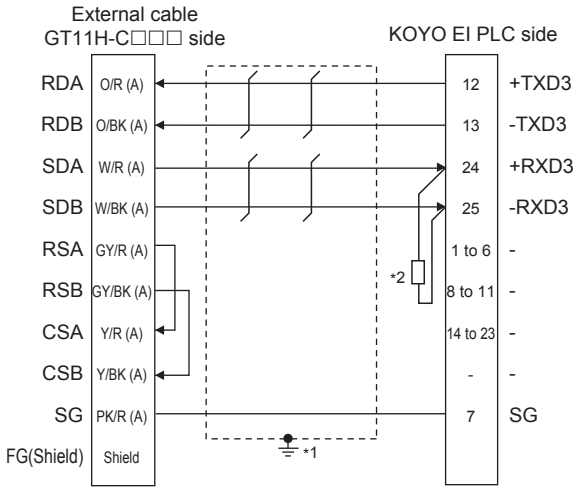

*1 Connect FG grounding to the appropriate part of a cable shield line.
*2 Connect a terminating resistor (approximately 150Ω) to the PLC at a terminal station.

RS422 connection diagram 7)

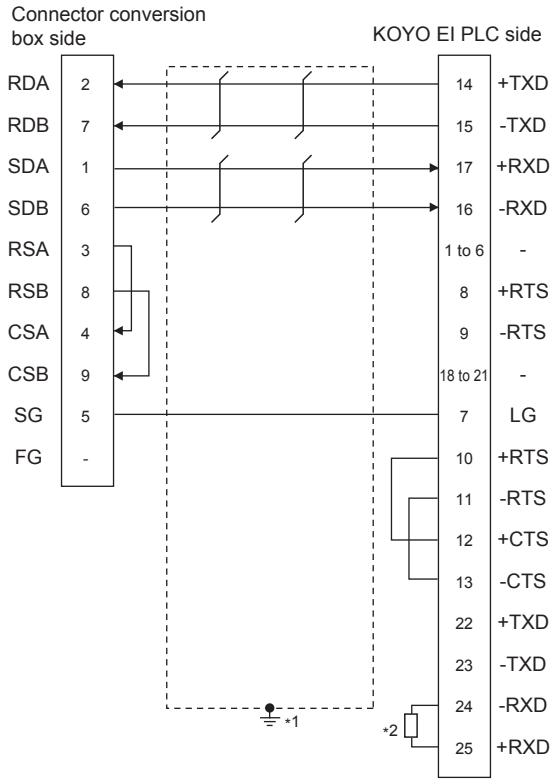

*1 Connect FG grounding to the appropriate part of a cable shield line.
*2 Connect a terminating resistor (approximately 150Ω) to the PLC at a terminal station.

RS422 connection diagram 8)

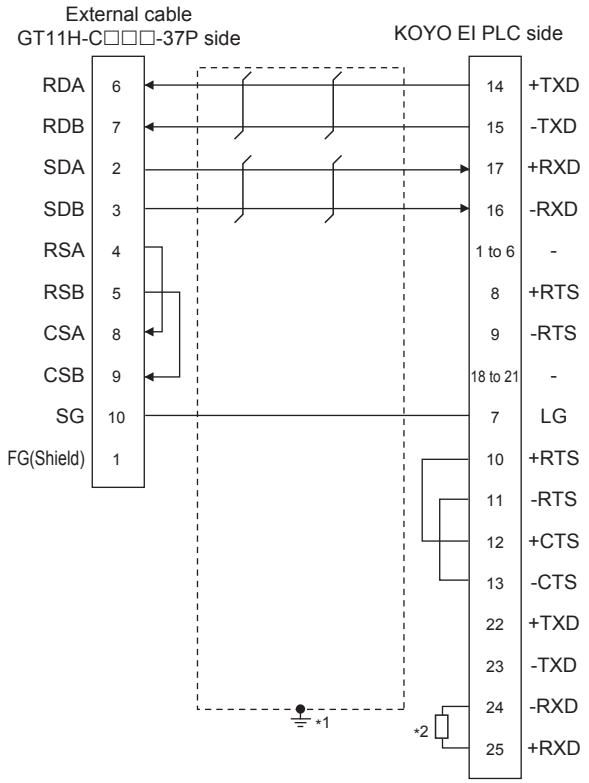

*1 Connect FG grounding to the appropriate part of a cable shield line.
*2 Connect a terminating resistor (approximately 150Ω) to the PLC at a terminal station.

RS422 connection diagram 9)

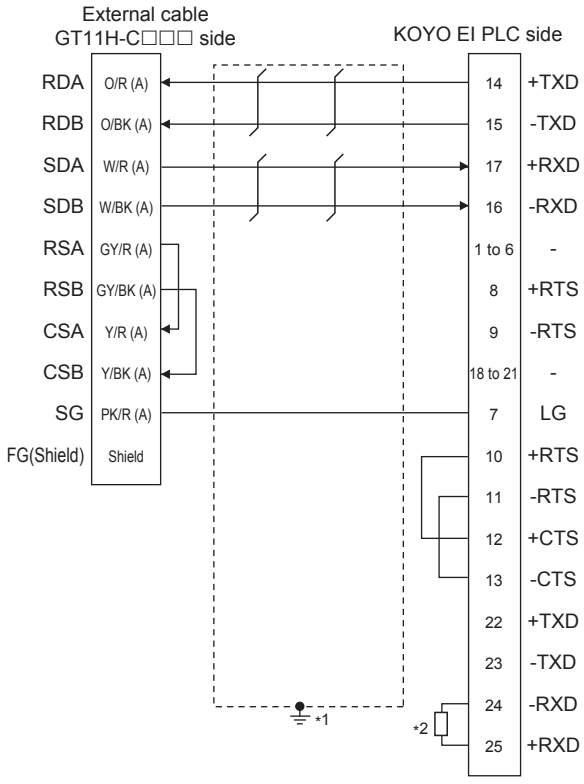

*1 Connect FG grounding to the appropriate part of a cable shield line.
*2 Connect a terminating resistor (approximately 150Ω) to the PLC at a terminal station.

RS422 connection diagram 10)

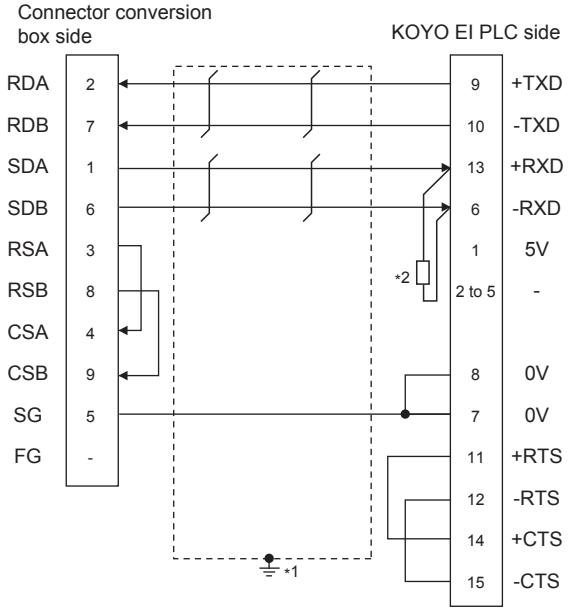

*1 Connect FG grounding to the appropriate part of a cable shield line.
*2 Connect a terminating resistor (approximately 100 to 500Ω) to the PLC to be a terminal.

RS422 connection diagram 11)

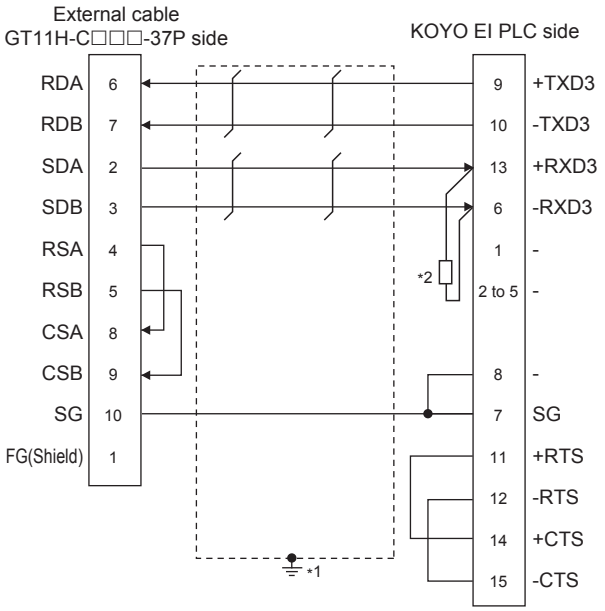

*1 Connect FG grounding to the appropriate part of a cable shield line.
*2 Connect a terminating resistor (approximately 100 to 500Ω) to the PLC to be a terminal.

RS422 connection diagram 12)

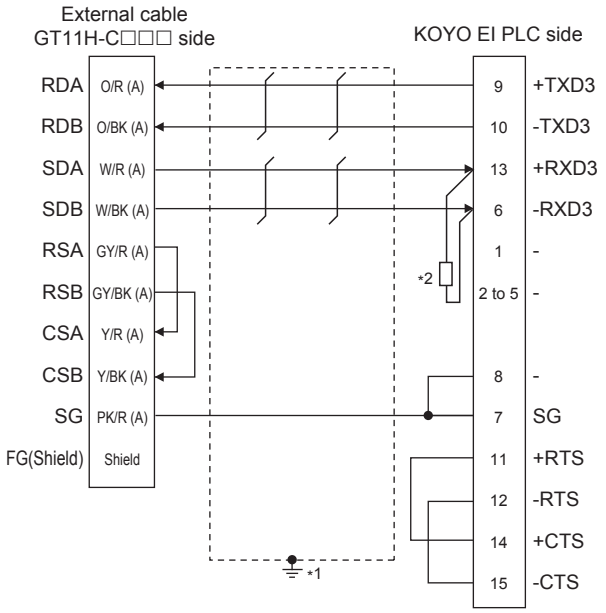

*1 Connect FG grounding to the appropriate part of a cable shield line.
*2 Connect a terminating resistor (approximately 100 to 500Ω) to the PLC to be a terminal.

RS422 connection diagram 13)

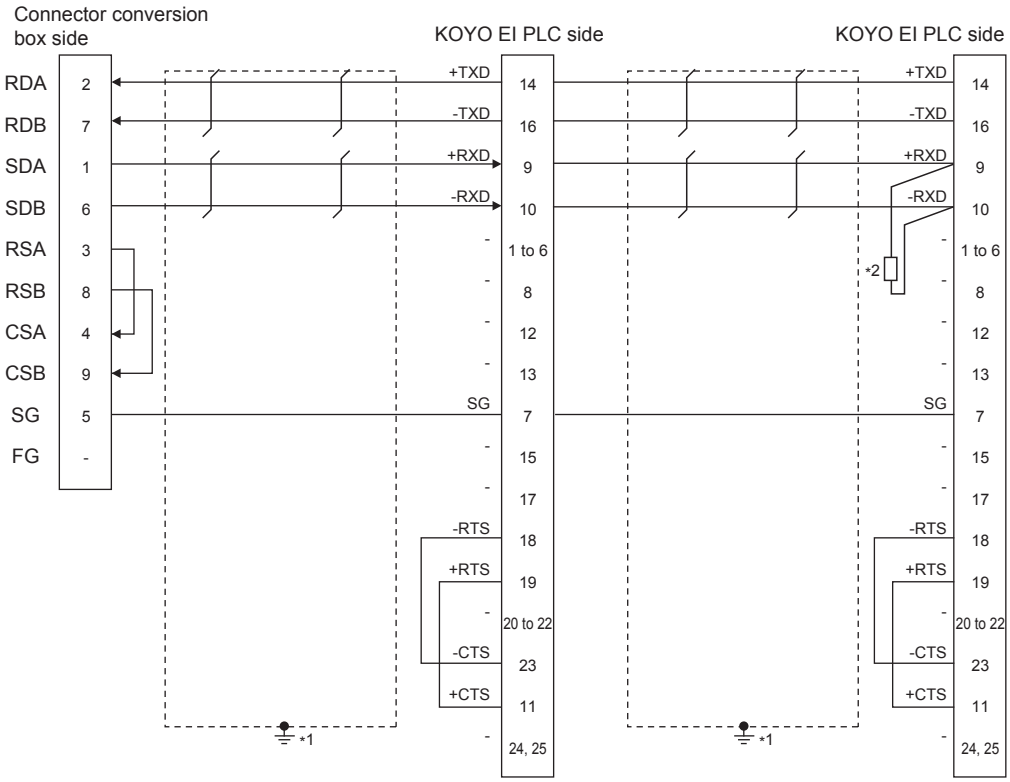

*1 Connect FG grounding to the appropriate part of a cable shield line.
*2 Connect a terminating resistor (approximately 150Ω) to the PLC at a terminal station.
When the number of links exceeds 30, use a transmission line conversion unit D-01CV per 30 links.
For details, refer to the following manual.

☞ KOYO EI PLC user's Manual

RS422 connection diagram 14)

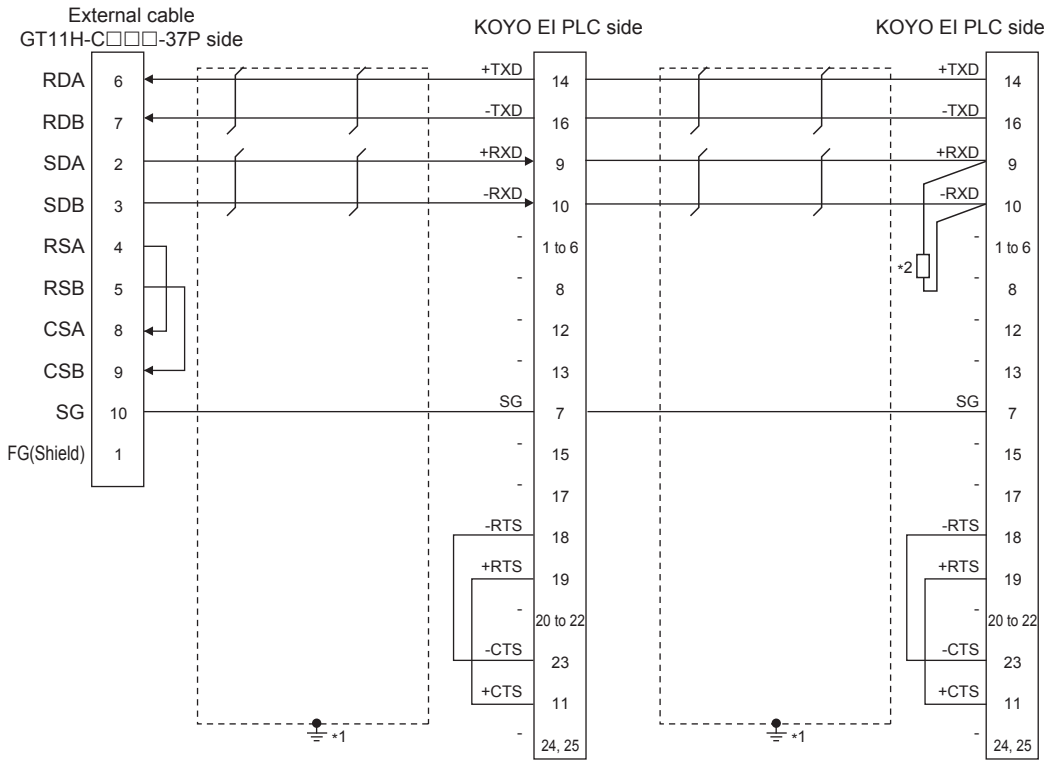

*1 Connect FG grounding to the appropriate part of a cable shield line.
*2 Connect a terminating resistor (approximately 150Ω) to the PLC at a terminal station.
When the number of links exceeds 30, use a transmission line conversion unit D-01CV per 30 links.
For details, refer to the following manual.

KOYO EI PLC user's Manual

RS422 connection diagram 15)

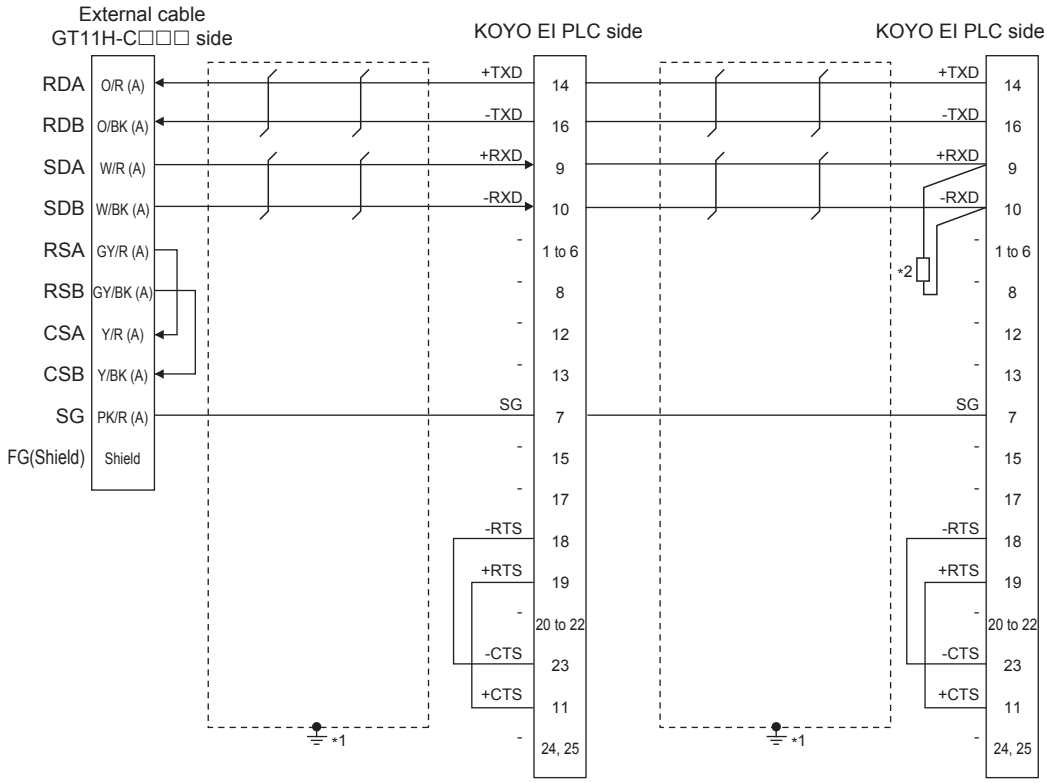

*1 Connect FG grounding to the appropriate part of a cable shield line.
*2 Connect a terminating resistor (approximately 150Ω) to the PLC at a terminal station.
When the number of links exceeds 30, use a transmission line conversion unit D-01CV per 30 links.
For details, refer to the following manual.

KOYO EI PLC user's Manual

RS422 connection diagram 16)

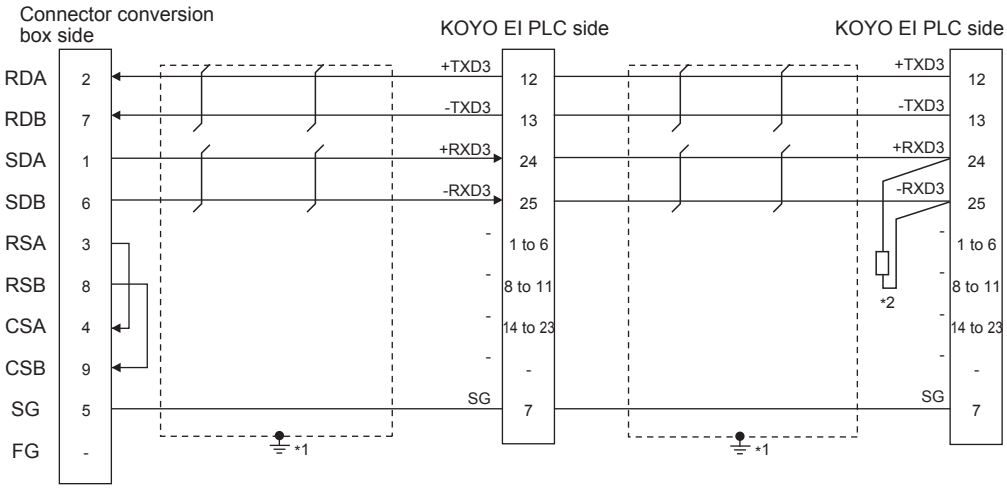

*1 Connect FG grounding to the appropriate part of a cable shield line.

*2 Connect a terminating resistor (approximately 150Ω) to the PLC at a terminal station.
When the number of links exceeds 30, use a transmission line conversion unit D-01CV per 30 links.
For details, refer to the following manual.

☞ KOYO EI PLC user's Manual

RS422 connection diagram 17)

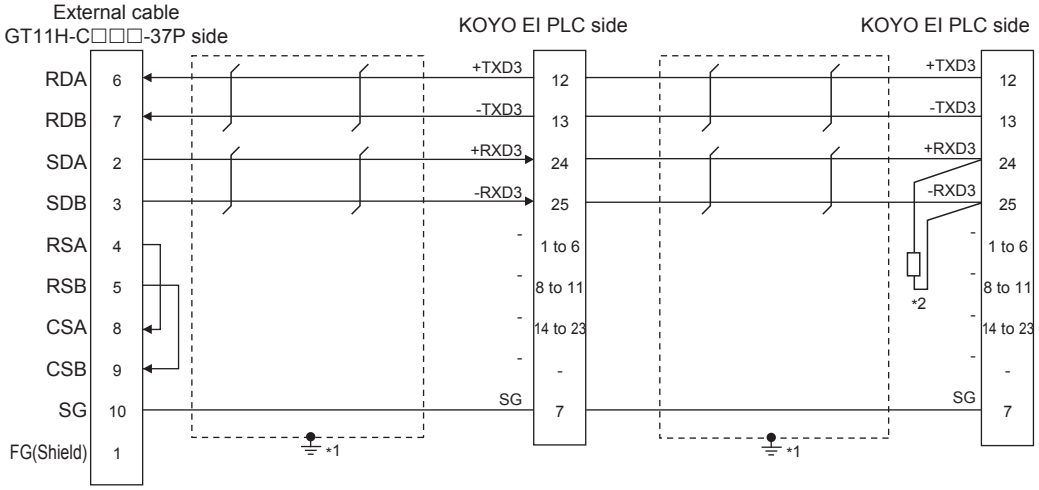

*1 Connect FG grounding to the appropriate part of a cable shield line.

*2 Connect a terminating resistor (approximately 150Ω) to the PLC at a terminal station.
When the number of links exceeds 30, use a transmission line conversion unit D-01CV per 30 links.
For details, refer to the following manual.

☞ KOYO EI PLC user's Manual

RS422 connection diagram 18)

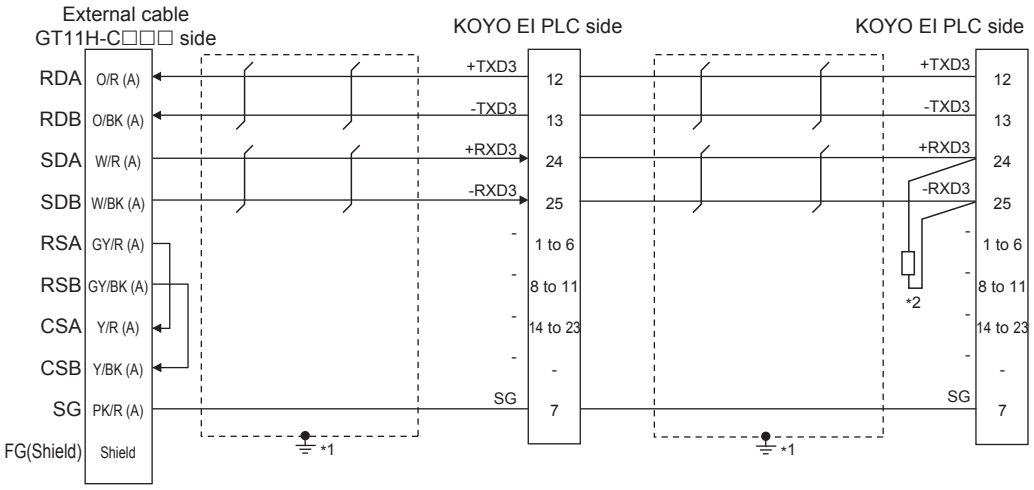

*1 Connect FG grounding to the appropriate part of a cable shield line.

*2 Connect a terminating resistor (approximately 150Ω) to the PLC at a terminal station.
When the number of links exceeds 30, use a transmission line conversion unit D-01CV per 30 links.
For details, refer to the following manual.

KOYO EI PLC user's Manual

RS422 connection diagram 19)

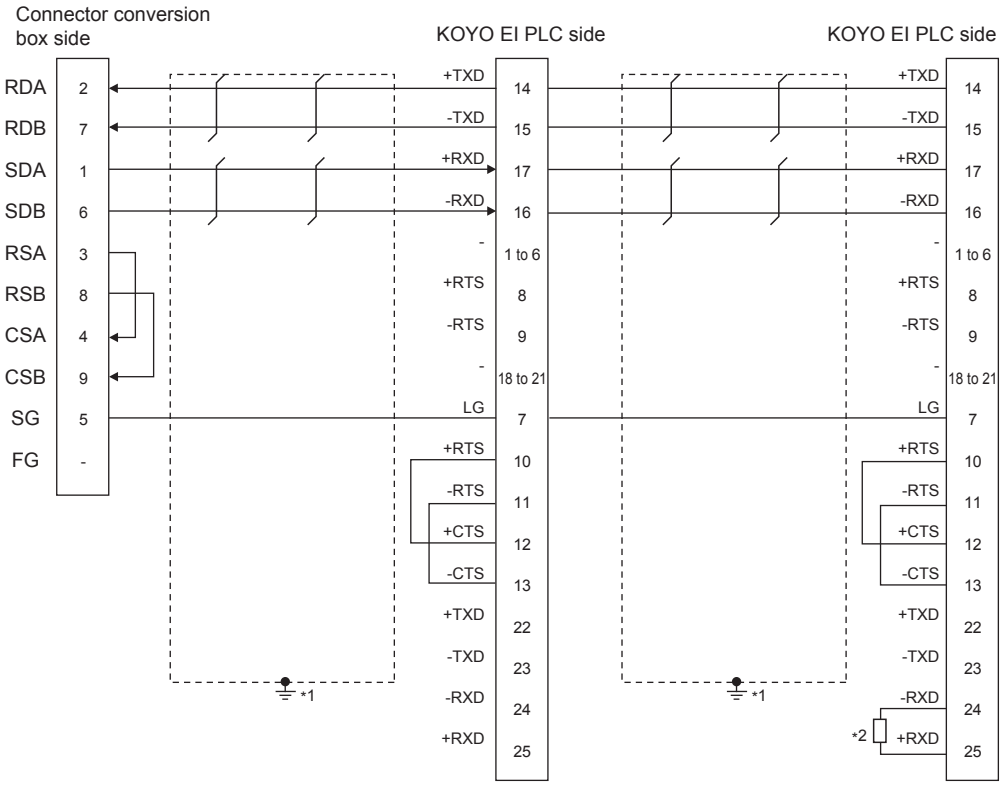

*1 Connect FG grounding to the appropriate part of a cable shield line.

*2 Connect a terminating resistor (approximately 150Ω) to the PLC at a terminal station.
When the number of links exceeds 30, use a transmission line conversion unit D-01CV per 30 links.
For details, refer to the following manual.

KOYO EI PLC user's Manual

RS422 connection diagram 20)

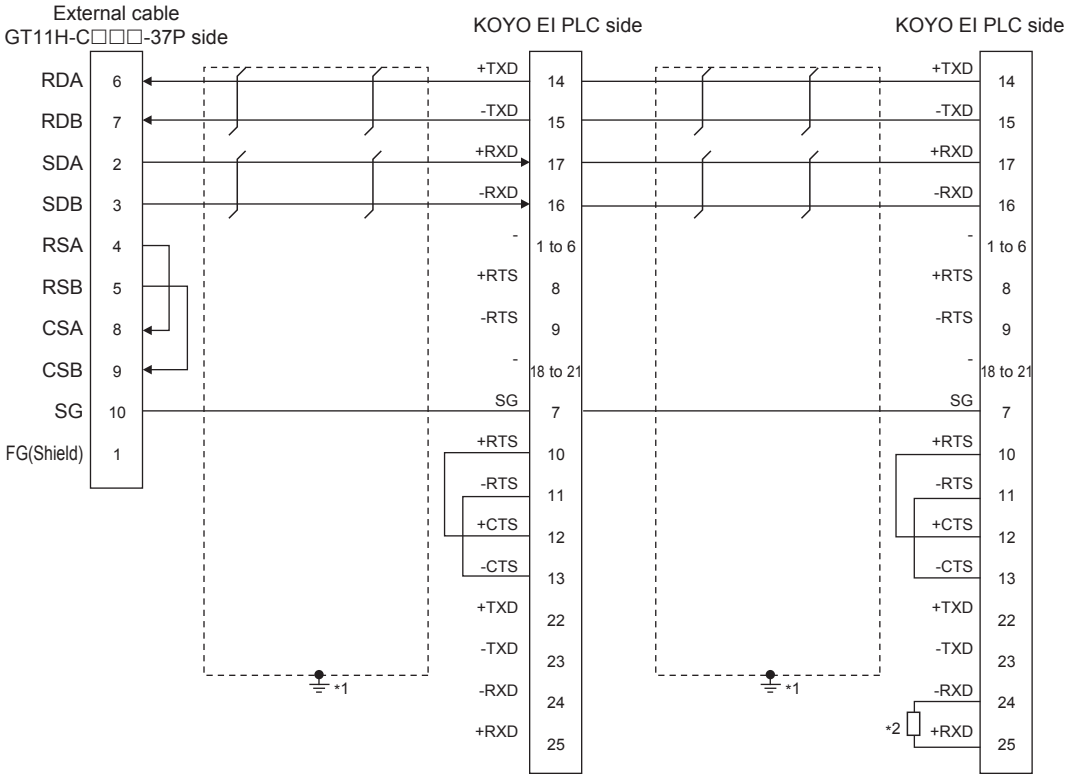

*1 Connect FG grounding to the appropriate part of a cable shield line.
*2 Connect a terminating resistor (approximately 150Ω) to the PLC at a terminal station.
When the number of links exceeds 30, use a transmission line conversion unit D-01CV per 30 links.
For details, refer to the following manual.

KOYO EI PLC user's Manual

RS422 connection diagram 21)

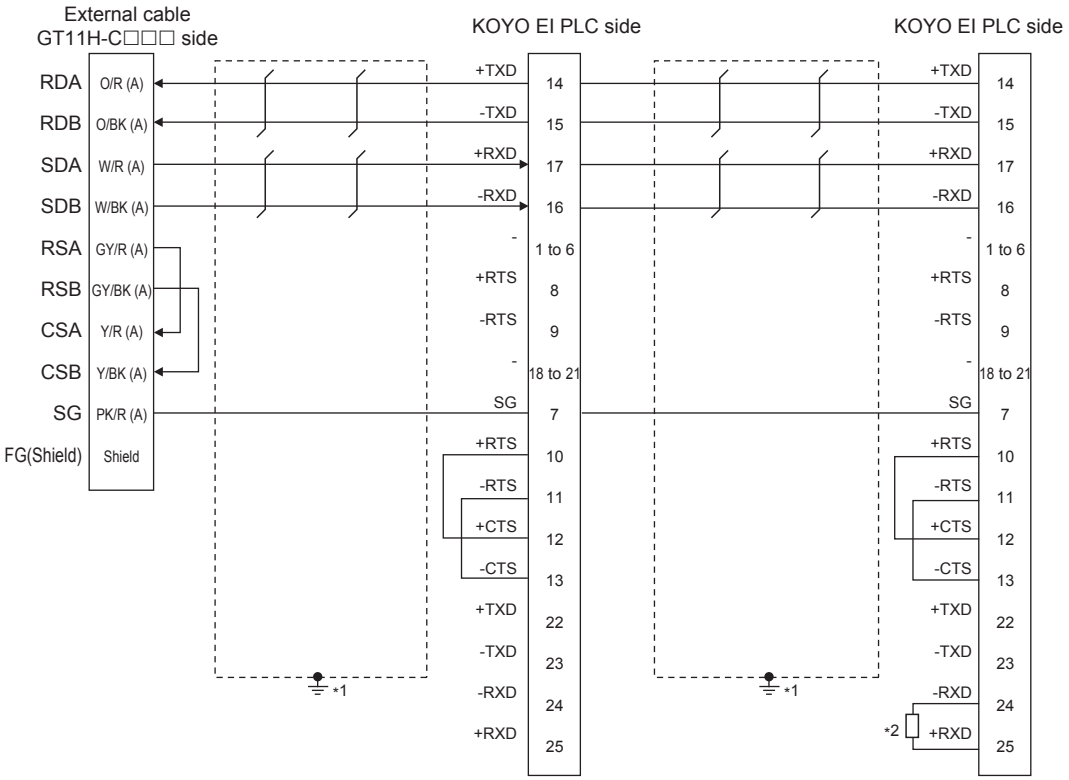

*1 Connect FG grounding to the appropriate part of a cable shield line.
*2 Connect a terminating resistor (approximately 150Ω) to the PLC at a terminal station.
When the number of links exceeds 30, use a transmission line conversion unit D-01CV per 30 links.
For details, refer to the following manual.

KOYO EI PLC user's Manual

RS422 connection diagram 22)

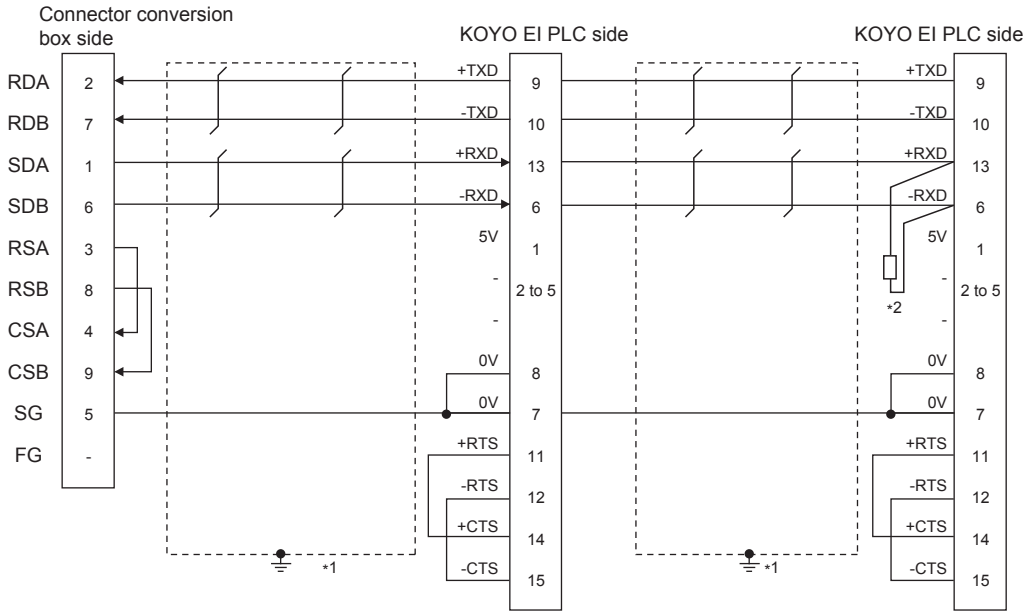

*1 Connect FG grounding to the appropriate part of a cable shield line.

*2 Connect a terminating resistor (approximately 100 to 500Ω) to the PLC to be a terminal.
When the number of links exceeds 30, use a transmission line conversion unit D-01CV per 30 links.
For details, refer to the following manual.

KOYO EI PLC user's Manual

RS422 connection diagram 23)

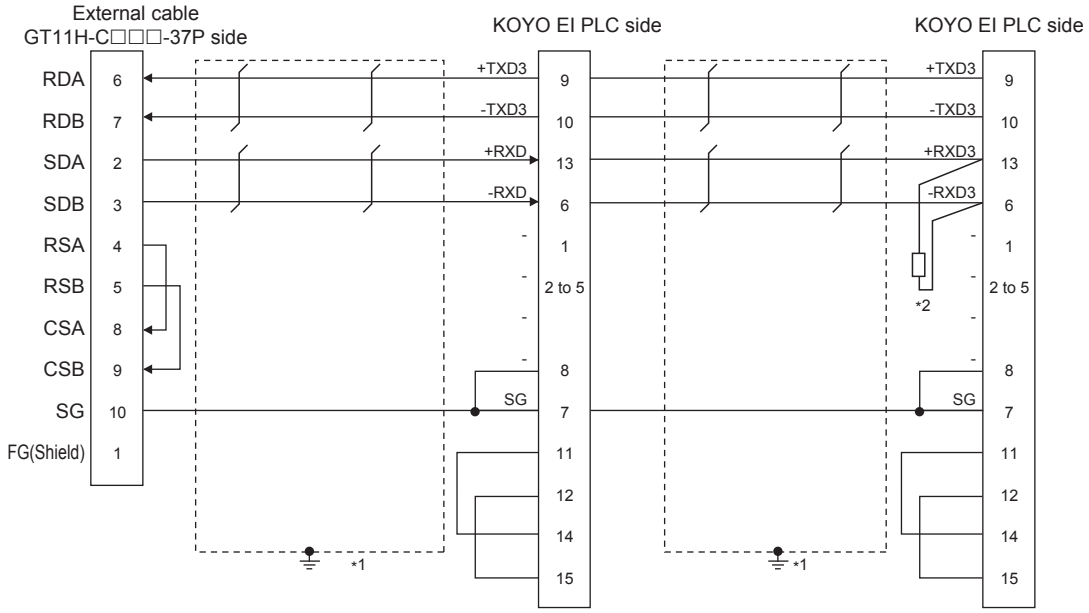

*1 Connect FG grounding to the appropriate part of a cable shield line.

*2 Connect a terminating resistor (approximately 100 to 500Ω) to the PLC to be a terminal.
When the number of links exceeds 30, use a transmission line conversion unit D-01CV per 30 links.
For details, refer to the following manual.

KOYO EI PLC user's Manual

RS422 connection diagram 24)

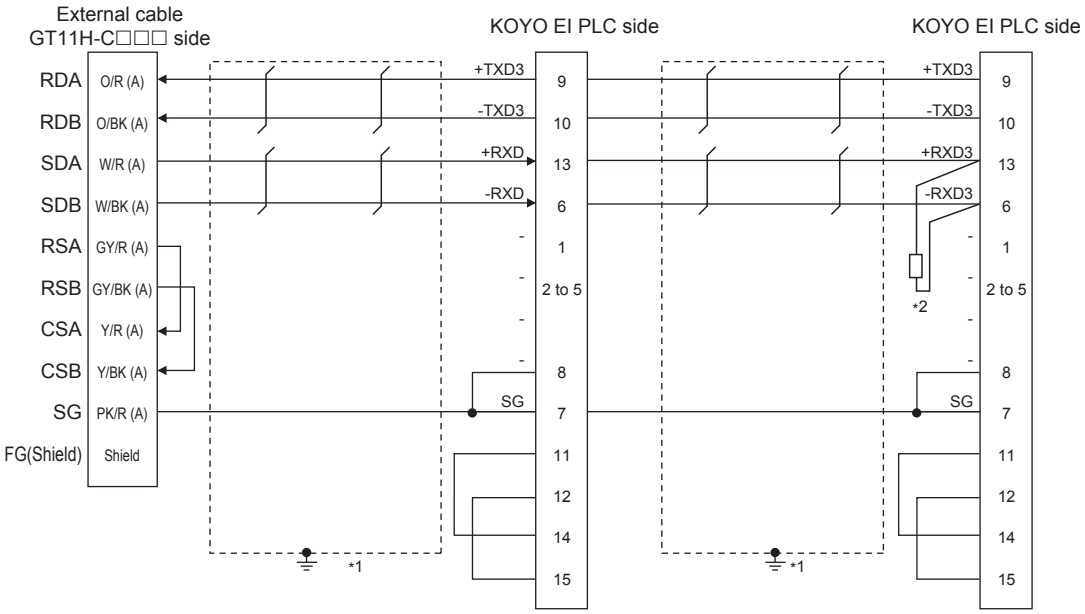

*1 Connect FG grounding to the appropriate part of a cable shield line.

*2 Connect a terminating resistor (approximately 100 to 500Ω) to the PLC to be a terminal.
When the number of links exceeds 30, use a transmission line conversion unit D-01CV per 30 links.
For details, refer to the following manual.

☞ KOYO EI PLC user's Manual

■ Precautions when preparing a cable

(1) Cable length
The total distance (between GOT and controllers) of RS-422 cable must be 13m or less.

(2) Connector conversion box side connector
For the connector conversion box side connector, refer to the following.

☞ 6.6 Connector Conversion Box

(3) External cable side connector
For the connector specifications of the external cable side, refer to the following.

☞ 8.2 External Cable, Relay Cable

(4) KOYO EI PLC side connector
Use the connector compatible with the KOYO EI PLC side.
For details, refer to the KOYO EI PLC user's manual.

■ Connecting terminating resistors

(1) KOYO EI PLC
To connect a KOYO EI PLC to a GOT, a terminating resistor must be set to the KOYO EI PLC.

☞ KOYO EI PLC user's Manual

36.4 GOT Side Settings

36.4.1 Setting communication interface (Communication settings)

Set the channel of the equipment connected to the GOT.

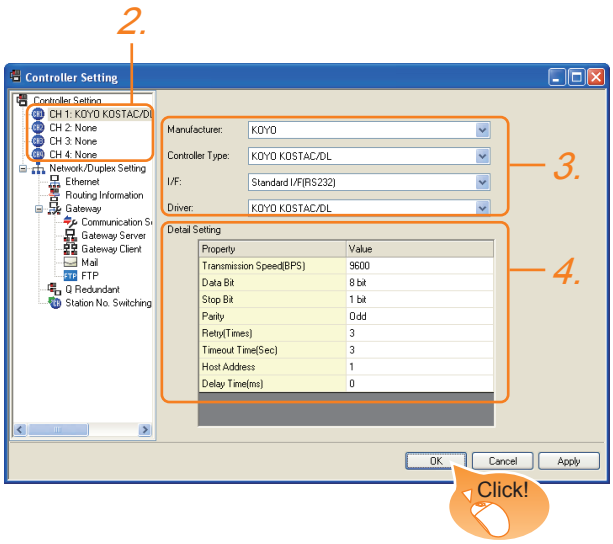

1. Select [Common] →o [Controller Setting] from the menu.
2. The Controller Setting window is displayed. Select the channel to be used from the list menu.
3. Set the following items.
   - Manufacturer: KOYO
   - Controller Type: KOYO KOSTAC/DL
   - I/F: Interface to be used
   - Driver: KOYO KOSTAC/DL
4. The detailed setting is displayed after Manufacturer, Controller Type, I/F, and Driver are set.
   Make the settings according to the usage environment.
   36.4.2 Communication detail settings

Click the OK button when settings are completed.

POINT

The settings of connecting equipment can be confirmed in [I/F Communication Setting].
For details, refer to the following.
18.1.2 I/F communication setting

36.4.2 Communication detail settings

Make the settings according to the usage environment.

Item	Description	Range
Transmission Speed	Set this item when change the transmission speed used for communication with the connected equipment. (Default: 9600bps)	9600bps, 19200bps, 38400bps, 57600bps, 115200bps
Data Bit	Set this item when change the data length used for communication with the connected equipment. (Default: 8bit)	7bit/8bit
Stop Bit	Specify the stop bit length for communications. (Default: 1bit)	1bit/2bits
Parity	Specify whether or not to perform a parity check, and how it is performed during communication. (Default: Odd)	None Even Odd
Retry	Set the number of retries to be performed when a communication error occurs. (Default: 3times)	0 to 5times
Timeout Time	Set the time period for a communication to time out. (Default: 3sec)	3 to 50sec
Delay Time	Set this item to adjust the transmission timing of the communication request from the GOT. (Default: 0ms)	0 to 300ms
Host Address	Specify the host address (station No. of the GOT to which the PLC is connected) in the connected network. (Default: 1)	1 to 90

POINT

(1) Communication interface setting by Utility
The communication interface setting can be changed on the Utility's [Communication setting] after writing [Communication Settings] of project data.
For details on the Utility, refer to the following manual.
11. COMMUNICATION INTERFACE SETTING (COMMUNICATION SETTING)

(2) Precedence in communication settings
When settings are made by GT Designer3 or the Utility, the latest setting is effective.

36.5 PLC Side Setting

POINT

KOYO EI PLC

For details of KOYO EI PLCs, refer to the following manuals.

☞ KOYO EI PLC user's Manual

■ PLC CPU

Model		Refer to
KOSTAC SU Series	SU-5E/6B	36.5.1
	SU-5M/6M	36.5.2
DirectLOGIC 05 Series DirectLOGIC 06 Series		36.5.3
DirectLOGIC 205 Series		36.5.4
PZ series		36.5.5

■ Data Communications Module

Model		Refer to
Data Communications Module	U-01DM	36.5.6
	D0-DCM	36.5.7
	D2-DCM	36.5.8

36.5.1 Connecting to SU-5E/6B

■ Communication settings

Make the following settings using the programmer system parameter setting.

Item	Set value
Station No.	1 to 90
MODE	HEX
Parity	NONE, ODD
Data bit	8bits (Fixed)
Stop bit	1bit (Fixed)

■ Setting DIP switches

Set the transmission speed using the CPU DIP switch.

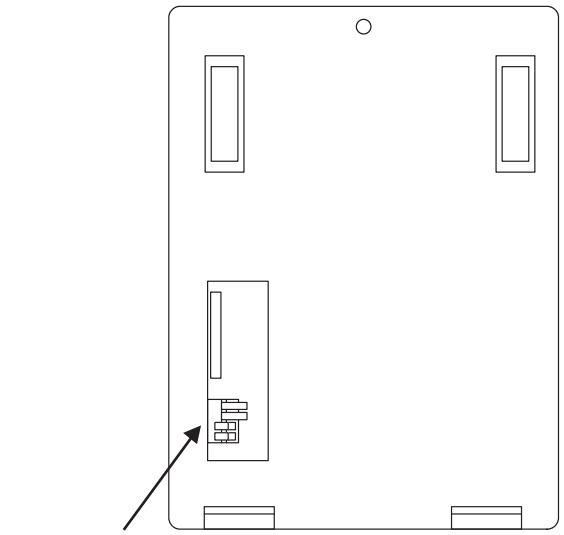

CPU DIP switch

Item	Set value	Switch No.	
		3	4
Transmission speed*1	9600bps	ON	OFF
	19200bps	ON	ON

*1 Indicates only the transmission speeds that can be set on the GOT side.
Specify the transmission speed to match the transmission speed of the GOT.

36.5.2 Connecting to SU-5M/6M

■ Communication settings

Make the following settings using the programmer system parameter setting.

Item	Set value
Protocol	CCM
Response delay time	0ms
Timeout Time	800ms/960ms/1200ms/1600ms/4000ms/ 8000ms/16000ms/40000ms
Station No.	1 to 90
MODE	HEX
Stop bit	1bit, 2bits
Data bit	8bits (Fixed)
Parity	NONE, ODD, EVEN
Transmission speed*1	9600bps, 19200bps, 38400bps

*1 Indicates only the transmission speeds that can be set on the GOT side.
Specify the transmission speed to match the transmission speed of the GOT.

36.5.3 Connecting to DirectLOGIC 05 series or DirectLOGIC 06 series

■ Communication settings

Make the following settings using the programmer system parameter setting.

Item	Set value
Protocol	CCM NET (DirectNET)
Timeout	780ms or more
RTS On Delay Time	0ms*1
RTS Off Delay Time	0ms*1
Station No.	1 to 90
Transmission speed*2	9600bps, 19200bps, 38400bps
Stop bit	1bit, 2bits
Parity	NONE, ODD, EVEN
Communication format	HEX

*1 To use a PLC with multidrop, set the "RTS on delay time" to 5ms or more and the "RTS off delay time" to 2ms or more.
*2 Indicates only the transmission speeds that can be set on the GOT side.
Specify the transmission speed to match the transmission speed of the GOT.

36.5.4 Connecting to DirectLOGIC 205 series

■ Communication settings

Make the following settings using the programmer system parameter setting.

Item	Set value
Protocol	CCM NET (DirectNET)
Station No.	1 to 90
Transmission speed*1	9600bps, 19200bps, 38400bps
Data bit	8bits (Fixed)
Stop bit	1bit (Fixed)
Parity	NONE, ODD
Self-diagnostic mode	OFF
Response delay time	0ms
Peer to Peer	OFF
Master/Slave	Slave
Timeout	Enable
MODE	HEX
MODBUS	OFF

*1 Indicates only the transmission speeds that can be set on the GOT side.
Specify the transmission speed to match the transmission speed of the GOT.

36.5.5 Connecting to PZ Series

■ Communication settings

Make the following settings using the programmer system parameter setting.

Item	Set value
Protocol	CCM NET
Timeout	800ms/960ms/1200ms/1600ms/4000ms/ 8000ms/16000ms/40000ms
Response delay time	0ms
Station No.	1 to 90
Communication format	HEX
Transmission speed*1	9600bps, 19200bps, 38400bps
Stop Bit	1bit
Parity	NONE, ODD

*1 Indicates only the transmission speeds that can be set on the GOT side.
Specify the transmission speed to match the transmission speed of the GOT.

■ Setting switches

Make the communication settings using each setting switch.

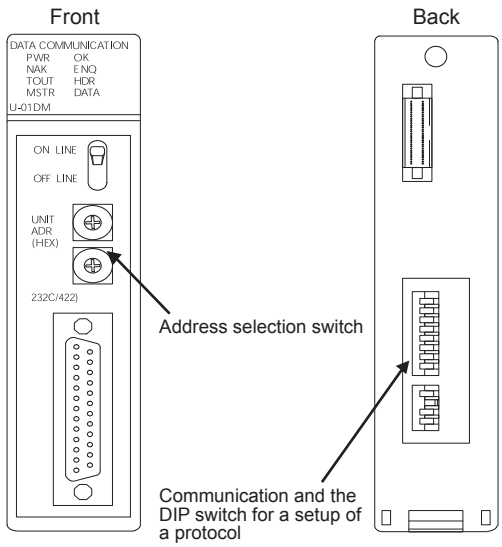

(1) Address selection switch (SW2, SW3)

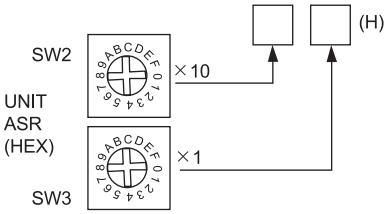

Switch No.	Setting	Contents of setting
SW2	Code higher rank (10^1figures)	01 to 5A
SW3	Code low rank (10^0figures)	

(2) Communication and the DIP switch for a setup of a protocol (SW4)

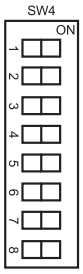

Setting item	Set value	Switch No.							
		1	2	3	4	5	6	7	8
Transmission speed*1	9600bps	OFF	ON	ON					
	19200bps	ON	ON	ON					
	38400bps	OFF	OFF	OFF					
Parity	ODD				ON				
	NONE				OFF				
Self-diagnostic	OFF					OFF			
Response delay time	0ms						OFF	OFF	OFF

*1 Indicates only the transmission speeds that can be set on the GOT side.
Specify the transmission speed to match the transmission speed of the GOT.

(3) Communication and the DIP switch for a setup of a protocol (SW5)

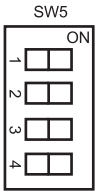

Item	Set value	Switch No.			
		1	2	3	4
Peer to Peer	OFF	OFF			
M/S	Slave		OFF		
TOUT existence	Enable			OFF	
ASCII/HEX	HEX				OFF

36.5.7 Connecting to D0-DCM

■ Communication settings

Write the following communication settings to the specified register using the programmer. For details of the register, refer to the following manual.

☞ KOYO EI PLC user's Manual

Item	Set value
MODE	HEX
Protocol	DirectNet
Station No.	1 to 90
Transmission speed*1	9600bps, 19200bps, 38400bps, 57600bps, 115200bps
Parity	NONE, ODD, EVEN (Only communication port 2)
RTS On Delay Time (Only communication port 2)	0ms
RTS Off Delay Time (Only communication port 2)	0ms
Timeout (Only communication port 2)	800ms/960ms/1200ms/1600ms/4000ms/ 8000ms/16000ms/40000ms
485 mode selection (Only communication port 2)	RS232 • RS422/485 4 line type
Data bit (Only communication port 2)	8bits, 7bits
Stop bit (Only communication port 2)	1bit, 2bits
The timeout between characters (Only communication port 2)	0 to 9999ms
The completion of a setting	Default use,A preset value is effective
Reset timeout	Invalid,Effective

*1 Indicates only the transmission speeds that can be set on the GOT side.
Specify the transmission speed to match the transmission speed of the GOT.

36.5.8 Connecting to D2-DCM

■ Communication settings

Make the following settings using the programmer.

Item	Set value
Station No.	1 to 90
Transmission speed*1	9600bps, 19200bps, 38400bps
Data bit	8bits (Fixed)
Stop bit	1bit (Fixed)
Parity	NONE, ODD
Self-diagnostic mode	OFF
Response delay time	0ms
Peer to Peer	OFF
Master/Slave	Slave
Timeout	Enable
MODE	HEX
MODBUS	OFF

*1 Indicates only the transmission speeds that can be set on the GOT side.
Specify the transmission speed to match the transmission speed of the GOT.

36.5.9 Station number setting

Set each station number so that no station number overlaps.
The station number can be set without regard to the cable connection order. There is no problem even if station numbers are not consecutive.

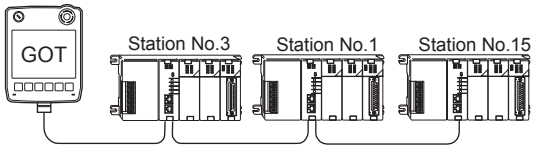

The example of a Station No. setting

(1) Direct specification

Specify the station No. of the PLC to be changed when setting device.

Specification range
1 to 90

36.6 Device Range that Can Be Set

For details on the device range of controllers that can be used on GT14 Handy, refer to the following manuals.

☞ GT Designer3 Version1 Screen Design Manual (Fundamentals)

☞ GOT1000 Series Connection Manual (Non-Mitsubishi Products 1) for GT Works3

37. CONNECTION TO JTEKT PLC

37.1 Connectable Model List

The following table shows the connectable models.

Model	Model type	Clock	Communication type	GT14 Handy	Refer to
PC3JG-P	TIC-6088	○	RS-232 RS-422	○	37.2.1
PC3JG	TIC-6125				
PC3JD	TIC-5642				
PC3JD-C	TIC-6029				
PC3J*1	TIC-5339	○	RS-232 RS-422	○	37.2.2
PC3JL	TIC-5783				
PC2J	THC-2764	○	RS-232 RS-422	○	37.2.3
PC2JS	THC-2994				
PC2JR	THC-5053				
PC2JC	THC-5070	○	RS-232 RS-422	○	37.2.4
PC2J16P	THC-5169				
PC2J16PR	THC-5173				

*1 Use PC3J of the version 2.1 or later.

37.2 System Configuration

37.2.1 Connecting to PC3JG, PC3JG-P, PC3JD, or PC3JD-C

■ For the RS-422 connection

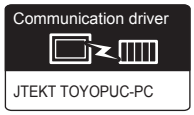

(1) When using the connector conversion box

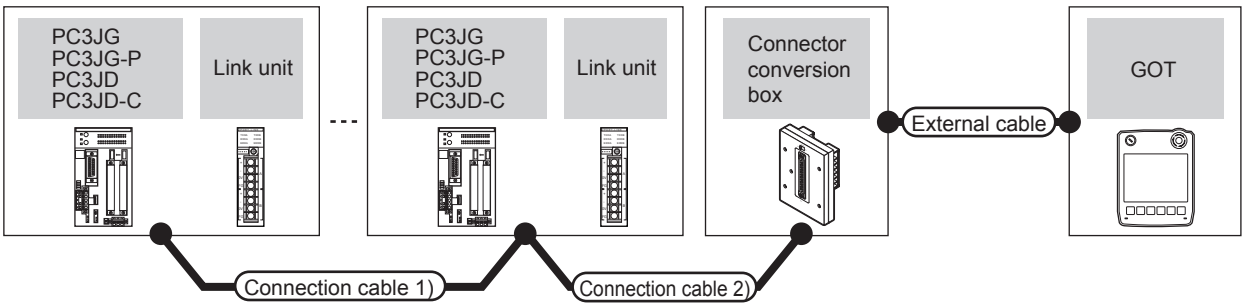

PLC			Connection cable 1)	Connection cable 2)	Connector conversion box	External cable	GOT model	Total distance *2	Number of connectable equipment
Model	Link unit*1	Communication type	Cable model Connection diagram number	Cable model Connection diagram number					
PC3JG PC3JG-P PC3JD PC3JD-C	PC/CMP2-LINK	RS-422	User preparing RS422 connection diagram 4)	GT09-C30R41201-6C(3m) GT09-C100R41201-6C(10m) or User preparing RS422 connection diagram 7)	GT11H-CNB-37S	GT11H-C30-37P(3m) GT11H-C60-37P(6m) GT11H-C100-37P(10m)	GT14 Handy	13m	10 PLCs for 1 GOT

*1 Product manufactured by JTEKT Corporation. For details of the product, contact JTEKT Corporation.
*2 The distance from the GOT to the PLC (Connection cable 1) + Connection cable 2) + External cable)

(2) When using the external cable (GT11H-C□□□-37P)

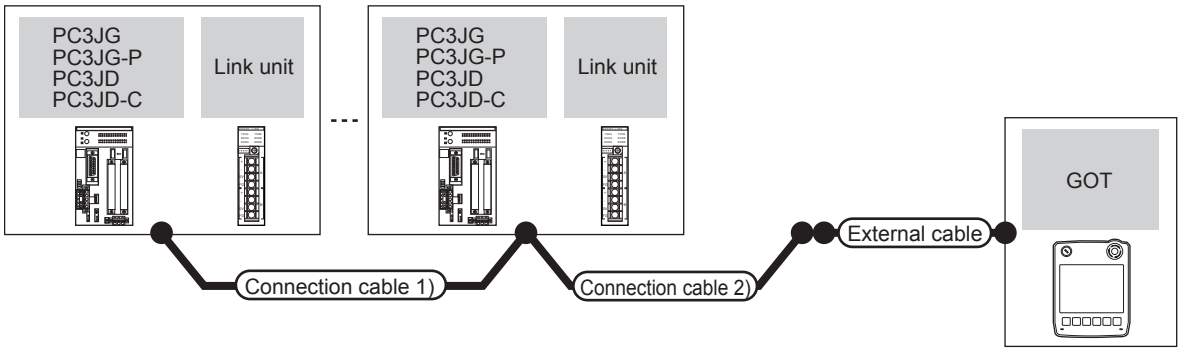

PLC			Connection cable 1)	Connection cable 2)	External cable	GOT model	Total distance *2	Number of connectable equipment
Model	Link unit*1	Communication type	Cable model Connection diagram number	Cable model Connection diagram number				
PC3JG PC3JG-P PC3JD PC3JD-C	PC/CMP2-LINK	RS-422	User preparing RS422 connection diagram 4)	User preparing RS422 connection diagram 8)	GT11H-C30-37P(3m) GT11H-C60-37P(6m) GT11H-C100-37P(10m)	GT14 Handy	13m	10 PLCs for 1 GOT

*1 Product manufactured by JTEKT Corporation. For details of the product, contact JTEKT Corporation.
*2 The distance from the GOT to the PLC (Connection cable 1) + Connection cable 2) + External cable)

(3) When using the external cable (GT11H-C□□□)

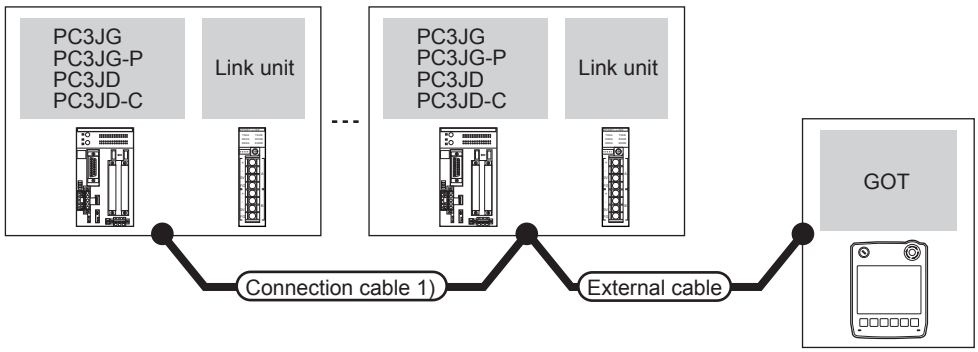

PLC			Connection cable 1)	External cable	GOT model	Total distance *2	Number of connectable equipment
Model	Link unit*1	Communication type	Cable model Connection diagram number				
PC3JG PC3JG-P PC3JD PC3JD-C	PC/CMP2-LINK	RS-422	User preparing RS422 connection diagram 4)	GT11H-C30(3m) GT11H-C60(6m) GT11H-C100(10m) User preparing RS422 connection diagram 9)	GT14 Handy	13m	10 PLCs for 1 GOT

*1 Product manufactured by JTEKT Corporation. For details of the product, contact JTEKT Corporation.
*2 The distance from the GOT to the PLC (Connection cable 1) + Connection cable 2) + External cable)

■ For the RS-232 connection (via an interface converter)

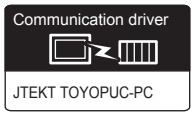

(1) When using the connector conversion box

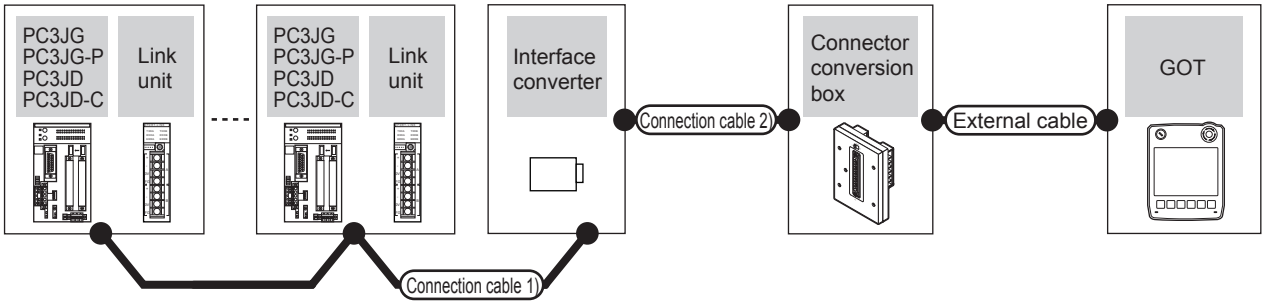

PLC		Connection cable 1)		RS-232/RS-422 Interface converter*1		Connection cable 2)	Connector conversion box	External cable	GOT model	Total distance *2	Number of connectable equipment
Model	Link unit*1	Cable model Connection diagram number	Max. distance	Model	Communication type	Cable model Connection diagram number					
PC3JG PC3JG-P PC3JD PC3JD-C	-	User preparing RS422 connection diagram 1)	500m	TXU-2051	RS-232	GT09-C30R21201-25P(3m) or User preparing RS232 connection diagram 1)	GT11H-CNB-37S	GT11H-C30-37P (3m)	GT14 Handy	6m	32 PLCs for 1 GOT
	PC/CMP-LINK 2PORT-LINK	User preparing RS422 connection diagram 2)									
	PC/CMP2-LINK	User preparing RS422 connection diagram 3)									

*1 Product manufactured by JTEKT Corporation. For details of the product, contact JTEKT Corporation.
*2 The distance from the GOT to the interface converter (Connection cable 2) + External cable)

(2) When using the external cable (GT11H-C□□□-37P)

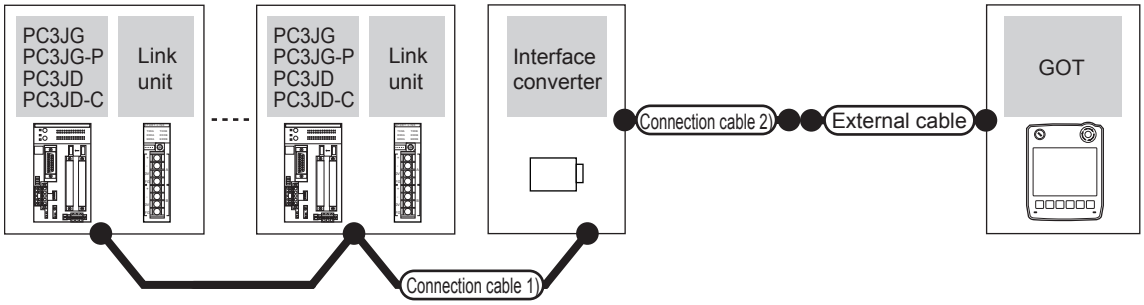

PLC		Connection cable 1)		RS-232/RS-422 Interface converter*1		Connection cable 2)	External cable	GOT model	Total distance *2	Number of connectable equipment
Model	Link unit*1	Cable model Connection diagram number	Max. distance	Model	Communication type	Cable model Connection diagram number				
PC3JG PC3JG-P PC3JD PC3JD-C	-	User preparing RS422 connection diagram 1)	500m	TXU-2051	RS-232	User preparing RS232 connection diagram 2)	GT11H-C30-37P (3m)	GT14 Handy	6m	32 PLCs for 1 GOT
	PC/CMP-LINK 2PORT-LINK	User preparing RS422 connection diagram 2)								
	PC/CMP2-LINK	User preparing RS422 connection diagram 3)								

*1 Product manufactured by JTEKT Corporation. For details of the product, contact JTEKT Corporation.
*2 The distance from the GOT to the interface converter (Connection cable 2) + External cable)

(3) When using the external cable (GT11H-C□□□)

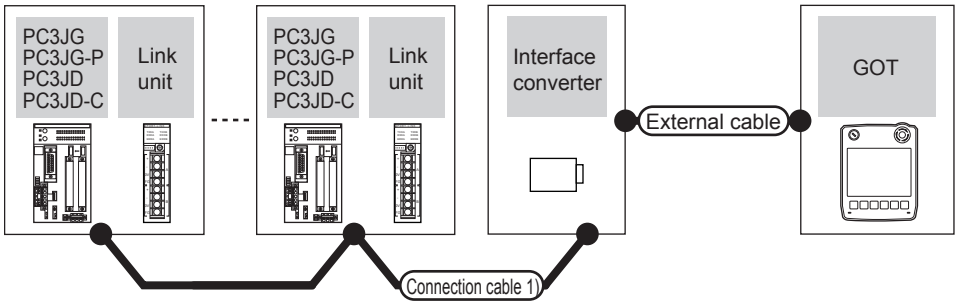

PLC		Connection cable 1)		RS-232/RS-422 Interface converter*1		External cable	GOT model	Total distance *2	Number of connectable equipment
Model	Link unit*1	Cable model Connection diagram number	Max. distance	Model	Communication type				
PC3JG PC3JG-P PC3JD PC3JD-C	-	User preparing RS422 connection diagram 1)	500m	TXU-2051	RS-232	GT11H-C30(3m) GT11H-C60(6m) User preparing RS232 connection diagram 3)	GT14 Handy	6m	32 PLCs for 1 GOT
	PC/CMP-LINK 2PORT-LINK	User preparing RS422 connection diagram 2)							
	PC/CMP2-LINK	User preparing RS422 connection diagram 3)							

*1 Product manufactured by JTEKT Corporation. For details of the product, contact JTEKT Corporation.
*2 The distance from the GOT to the interface converter (External cable)

37.2.2 Connecting to PC3J or PC3JL

■ For the RS-422 connection

Communication driver
JTEKT TOYOPUC-PC

(1) When using the connector conversion box

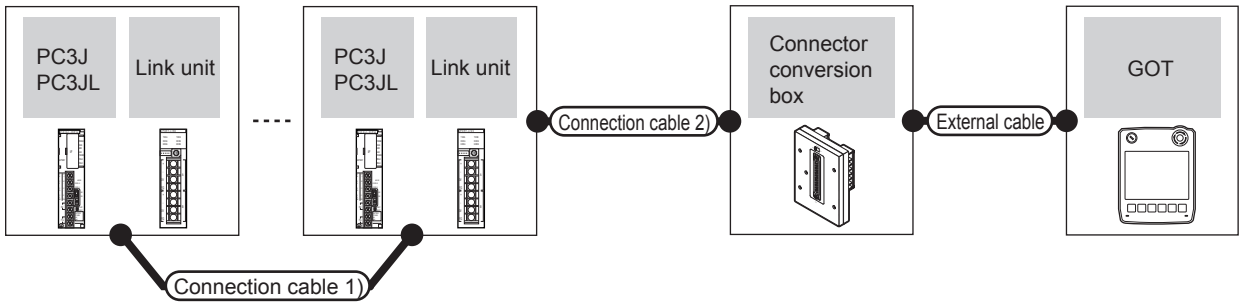

PLC			Connection cable 1)	Connection cable 2)	Connector conversion box	External cable	GOT model	Total distance *2	Number of connectable equipment
Model	Link unit*1	Communication type	Cable model Connection diagram number	Cable model Connection diagram number					
PC3J PC3JL	-	RS-422	User preparing RS422 connection diagram 6)	GT09-C30R41201-6C(3m) GT09-C100R41201-6C(10m) or User preparing RS422 connection diagram 7)	GT11H-CNB-37S	GT11H-C30-37P(3m) GT11H-C60-37P(6m) GT11H-C100-37P(10m)	GT14 Handy	13m	10 PLCs for 1 GOT
	PC/CMP2-LINK	RS-422	User preparing RS422 connection diagram 4)						

*1 Product manufactured by JTEKT Corporation. For details of the product, contact JTEKT Corporation.
*2 The distance from the GOT to the PLC (Connection cable 1) + Connection cable 2) + External cable)

(2) When using the external cable (GT11H-C□□□-37P)

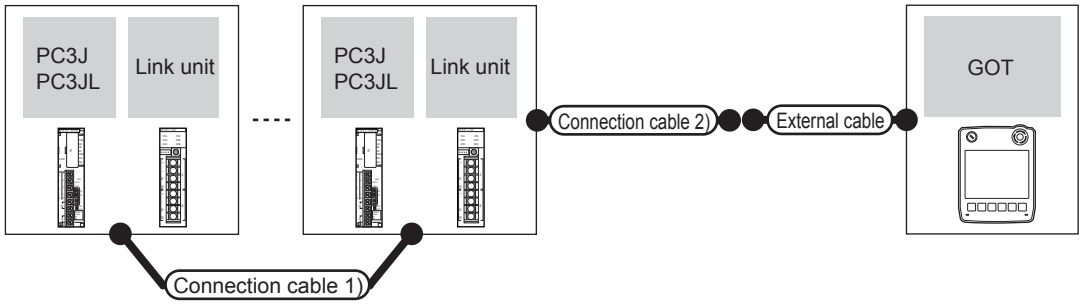

PLC			Connection cable 1)	Connection cable 2)	External cable	GOT model	Total distance *2	Number of connectable equipment
Model	Link unit*1	Communication type	Cable model Connection diagram number	Cable model Connection diagram number				
PC3J PC3JL	-	RS-422	User preparing RS422 connection diagram 6)	User preparing RS422 connection diagram 8)	GT11H-C30-37P(3m) GT11H-C60-37P(6m) GT11H-C100-37P(10m)	GT14 Handy	13m	10 PLCs for 1 GOT
	PC/CMP2-LINK	RS-422	User preparing RS422 connection diagram 4)					

*1 Product manufactured by JTEKT Corporation. For details of the product, contact JTEKT Corporation.
*2 The distance from the GOT to the PLC (Connection cable 1) + Connection cable 2) + External cable)

(3) When using the external cable (GT11H-C□□□)

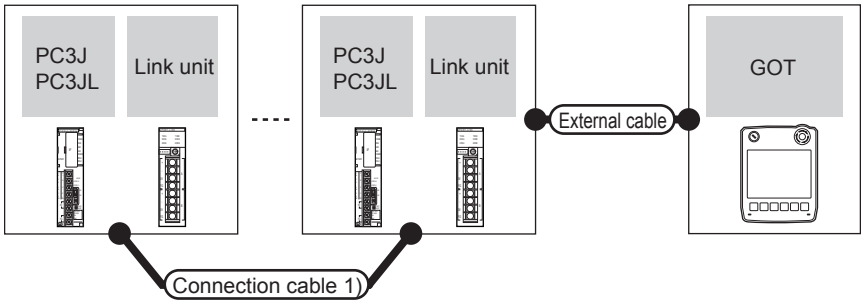

PLC			Connection cable 1)	External cable	GOT model	Total distance *2	Number of connectable equipment
Model	Link unit*1	Communication type	Cable model Connection diagram number				
PC3J PC3JL	-	RS-422	User preparing RS422 connection diagram 6)	GT11H-C30(3m) GT11H-C60(6m) GT11H-C100(10m) User preparing RS422 connection diagram 9)	GT14 Handy	13m	10 PLCs for 1 GOT
	PC/CMP2-LINK	RS-422	User preparing RS422 connection diagram 4)				

*1 Product manufactured by JTEKT Corporation. For details of the product, contact JTEKT Corporation.
*2 The distance from the GOT to the PLC (Connection cable 1) + External cable)

■ For the RS-232 connection (via an interface converter)

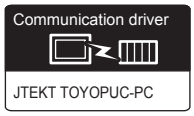

(1) When using the connector conversion box

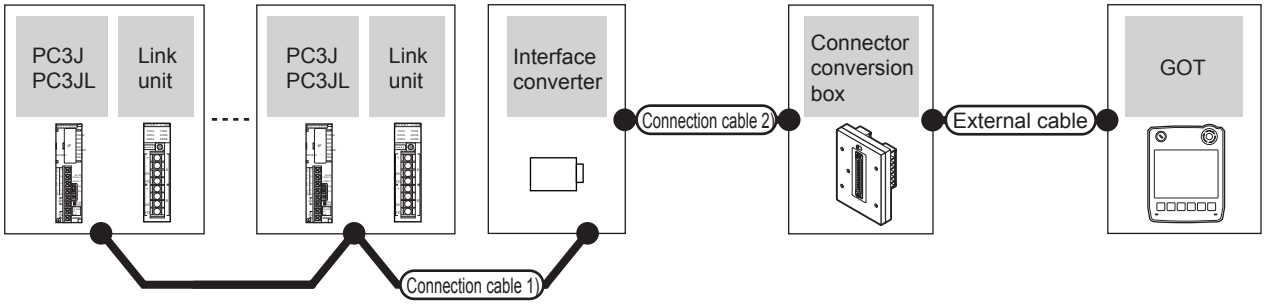

PLC		Connection cable 1)		RS-232/RS-422 Interface converter*1		Connection cable 2)	Connector conversion box	External cable	GOT model	Total distance *2	Number of connectable equipment
Model	Link unit*1	Cable model Connection diagram number	Max. distance	Model	Communication type	Cable model Connection diagram number					
PC3J PC3JL	-	User preparing RS422 connection diagram 1)	500m	TXU-2051	RS-232	GT09-C30R21201-25P(3m) or User preparing RS232 connection diagram 1)	GT11H-CNB-37S	GT11H-C30-37P (3m)	GT14 Handy	6m	32 PLCs for 1 GOT
		User preparing RS422 connection diagram 5)									
	PC/CMP-LINK 2PORT-LINK	User preparing RS422 connection diagram 2)									
	PC/CMP2-LINK	User preparing RS422 connection diagram 3)									

*1 Product manufactured by JTEKT Corporation. For details of the product, contact JTEKT Corporation.
*2 The distance from the GOT to the interface converter (Connection cable 2) + External cable)

(2) When using the external cable (GT11H-C□□□-37P)

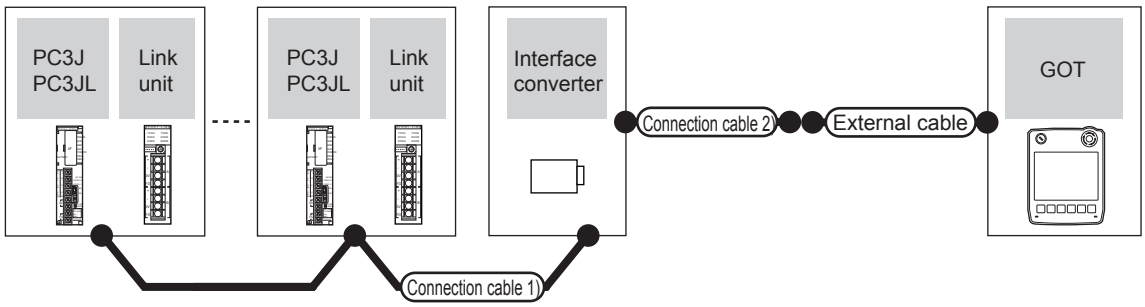

PLC		Connection cable 1)		RS-232/RS-422 Interface converter*1		Connection cable 2)	External cable	GOT model	Total distance *2	Number of connectable equipment
Model	Link unit*1	Cable model Connection diagram number	Max. distance	Model	Communication type	Cable model Connection diagram number				
PC3J PC3JL	-	User preparing RS422 connection diagram 1)	500m	TXU-2051	RS-232	User preparing RS232 connection diagram 2)	GT11H-C30-37P (3m)	GT14 Handy	6m	32 PLCs for 1 GOT
		User preparing RS422 connection diagram 5)								
	PC/CMP-LINK 2PORT-LINK	User preparing RS422 connection diagram 2)								
	PC/CMP2-LINK	User preparing RS422 connection diagram 3)								

*1 Product manufactured by JTEKT Corporation. For details of the product, contact JTEKT Corporation.
*2 The distance from the GOT to the interface converter (Connection cable 2) + External cable)

(3) When using the external cable (GT11H-C□□□)

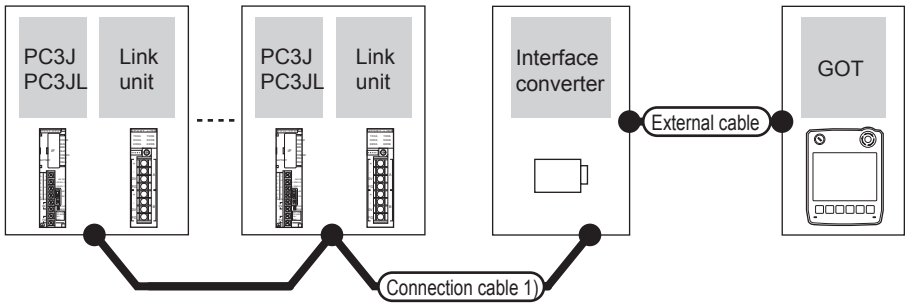

PLC		Connection cable 1)		RS-232/RS-422 Interface converter*1		External cable	GOT model	Total distance *2	Number of connectable equipment
Model	Link unit*1	Cable model Connection diagram number	Max. distance	Model	Communication type				
PC3J PC3JL	-	User preparing RS422 connection diagram 1)	500m	TXU-2051	RS-232	GT11H-C30(3m) GT11H-C60(6m) User preparing RS232 connection diagram 3)	GT14 Handy	6m	32 PLCs for 1 GOT
		User preparing RS422 connection diagram 5)							
	PC/CMP-LINK 2PORT-LINK	User preparing RS422 connection diagram 2)							
	PC/CMP2-LINK	User preparing RS422 connection diagram 3)							

*1 Product manufactured by JTEKT Corporation. For details of the product, contact JTEKT Corporation.
*2 The distance from the GOT to the interface converter (External cable)

37.2.3 Connecting to PC2J, PC2JS or PC2JR

■ For the RS-422 connection

Communication driver

JTEKT TOYOPUC-PC

(1) When using the connector conversion box

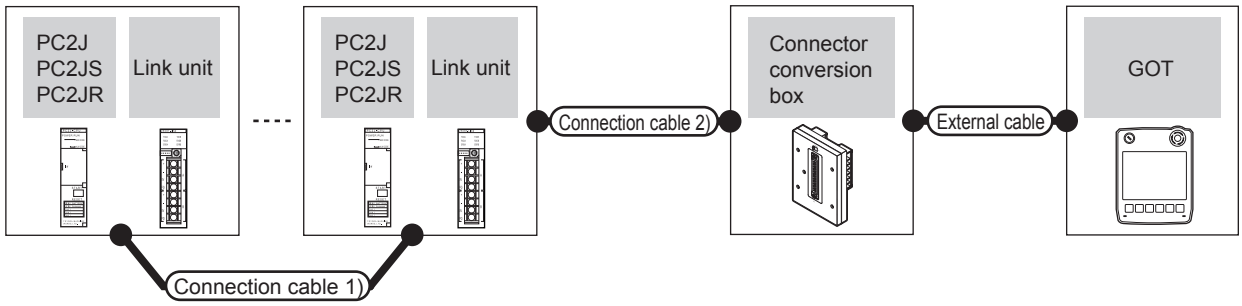

PLC			Connection cable 1)	Connection cable 2)	Connector conversion box	External cable	GOT model	Total distance *2	Number of connectable equipment
Model	Link unit*1	Communication type	Cable model Connection diagram number	Cable model Connection diagram number					
PC2J PC2JS PC2JR	PC/CMP2-LINK	RS-422	User preparing RS422 connection diagram 4)	GT09-C30R41201-6C(3m) GT09-C100R41201-6C(10m) or User preparing RS422 connection diagram 7)	GT11H-CNB-37S	GT11H-C30-37P(3m) GT11H-C60-37P(6m) GT11H-C100-37P(10m)	GT14 Handy	13m	10 PLCs for 1 GOT

*1 Product manufactured by JTEKT Corporation. For details of the product, contact JTEKT Corporation.

*2 The distance from the GOT to the PLC (Connection cable 1) + Connection cable 2) + External cable)

(2) When using the external cable (GT11H-C□□□-37P)

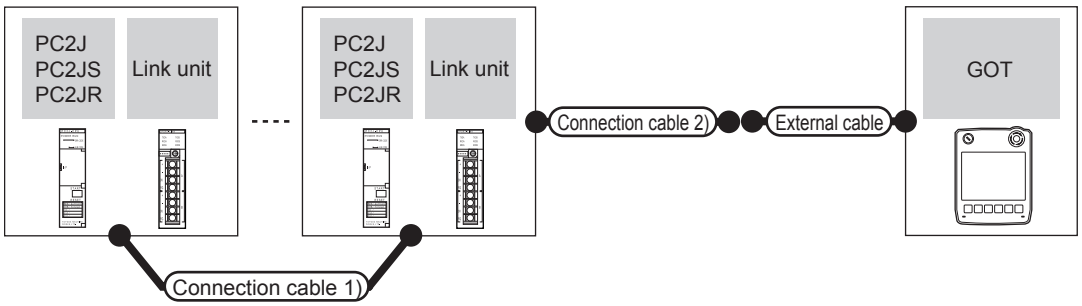

PLC			Connection cable 1)	Connection cable 2)	External cable	GOT model	Total distance *2	Number of connectable equipment
Model	Link unit*1	Communication type	Cable model Connection diagram number	Cable model Connection diagram number				
PC2J PC2JS PC2JR	PC/CMP2-LINK	RS-422	User preparing RS422 connection diagram 4)	User preparing RS422 connection diagram 8)	GT11H-C30-37P(3m) GT11H-C60-37P(6m) GT11H-C100-37P(10m)	GT14 Handy	13m	10 PLCs for 1 GOT

*1 Product manufactured by JTEKT Corporation. For details of the product, contact JTEKT Corporation.

*2 The distance from the GOT to the PLC (Connection cable 1) + Connection cable 2) + External cable)

(3) When using the external cable (GT11H-C□□□)

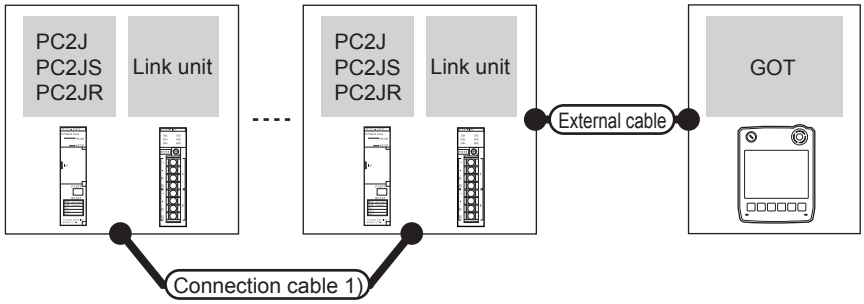

PLC			Connection cable 1)	External cable	GOT model	Total distance *2	Number of connectable equipment
Model	Link unit*1	Communication type	Cable model Connection diagram number				
PC2J PC2JS PC2JR	PC/CMP2-LINK	RS-422	User preparing RS422 connection diagram 4)	GT11H-C30(3m) GT11H-C60(6m) GT11H-C100(10m) User preparing RS422 connection diagram 9)	GT14 Handy	13m	10 PLCs for 1 GOT

*1 Product manufactured by JTEKT Corporation. For details of the product, contact JTEKT Corporation.
*2 The distance from the GOT to the PLC (Connection cable 1) + External cable)

■ For the RS-232 connection (via an interface converter)

Communication driver
JTEKT TOYOPUC-PC

(1) When using the connector conversion box

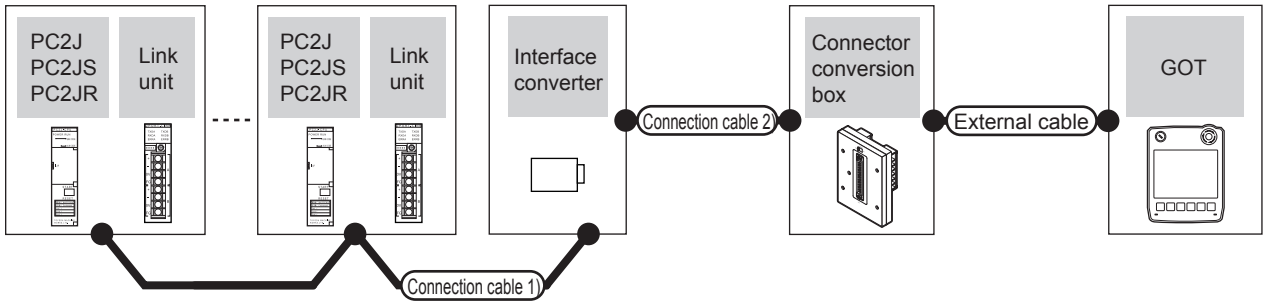

PLC		Connection cable 1)		RS-232/RS-422 Interface converter*1		Connection cable 2)	Connector conversion box	External cable	GOT model	Total distance *2	Number of connectable equipment
Model	Link unit*1	Cable model Connection diagram number	Max. distance	Model	Communication type	Cable model Connection diagram number					
PC2J PC2JS PC2JR	PC/CMP-LINK 2PORT-LINK	User preparing RS422 connection diagram 2)	500m	TXU-2051	RS-232	GT09-C30R21201-25P(3m) or User preparing RS232 connection diagram 1)	GT11H-CNB-37S	GT11H-C30-37P(3m)	GT14 Handy	6m	32 PLCs for 1 GOT
	PC/CMP2-LINK	User preparing RS422 connection diagram 3)									

*1 Product manufactured by JTEKT Corporation. For details of the product, contact JTEKT Corporation.
*2 The distance from the GOT to the interface converter (Connection cable 2) + External cable)

(2) When using the external cable (GT11H-C□□□-37P)

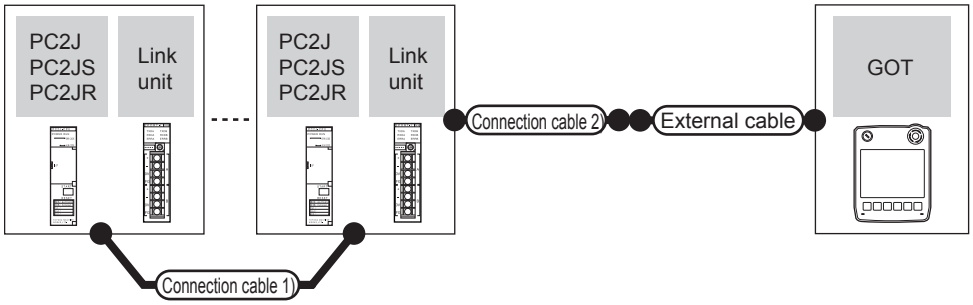

PLC		Connection cable 1)		RS-232/RS-422 Interface converter*1		Connection cable 2)	External cable	GOT model	Total distance *2	Number of connectable equipment
Model	Link unit*1	Cable model Connection diagram number	Max. distance	Model	Communication type	Cable model Connection diagram number				
PC2J PC2JS PC2JR	PC/CMP-LINK 2PORT-LINK	User preparing RS422 connection diagram 2)	500m	TXU-2051	RS-232	User preparing RS232 connection diagram 2)	GT11H-C30-37P (3m)	GT14 Handy	6m	10 PLCs for 1 GOT
	PC/CMP2-LINK	User preparing RS422 connection diagram 3)								

*1 Product manufactured by JTEKT Corporation. For details of the product, contact JTEKT Corporation.
*2 The distance from the GOT to the interface converter (Connection cable 2) + External cable)

(3) When using the external cable (GT11H-C□□□)

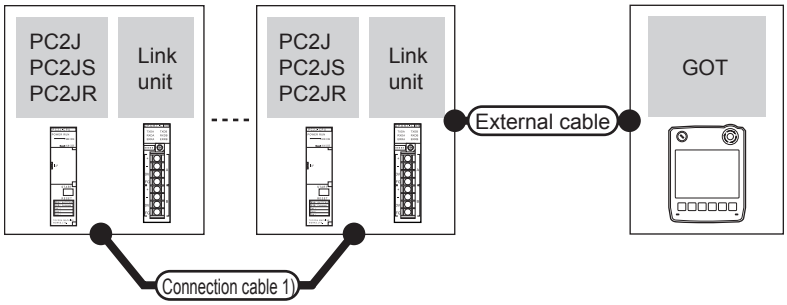

PLC		Connection cable 1)		RS-232/RS-422 Interface converter*1		External cable	GOT model	Total distance *2	Number of connectable equipment
Model	Link unit*1	Cable model Connection diagram number	Max. distance	Model	Communication type				
PC2J PC2JS PC2JR	PC/CMP-LINK 2PORT-LINK	User preparing RS422 connection diagram 2)	500m	TXU-2051	RS-232	GT11H-C30(3m) GT11H-C60(6m) User preparing RS232 connection diagram 3)	GT14 Handy	6m	10 PLCs for 1 GOT
	PC/CMP2-LINK	User preparing RS422 connection diagram 3)							

*1 Product manufactured by JTEKT Corporation. For details of the product, contact JTEKT Corporation.
*2 The distance from the GOT to the interface converter (External cable)

37.2.4 Connecting to PC2JC, PC216P or PC2J16PR

■ For the RS-422 connection

Communication driver
JTEKT TOYOPUC-PC

(1) When using the connector conversion box

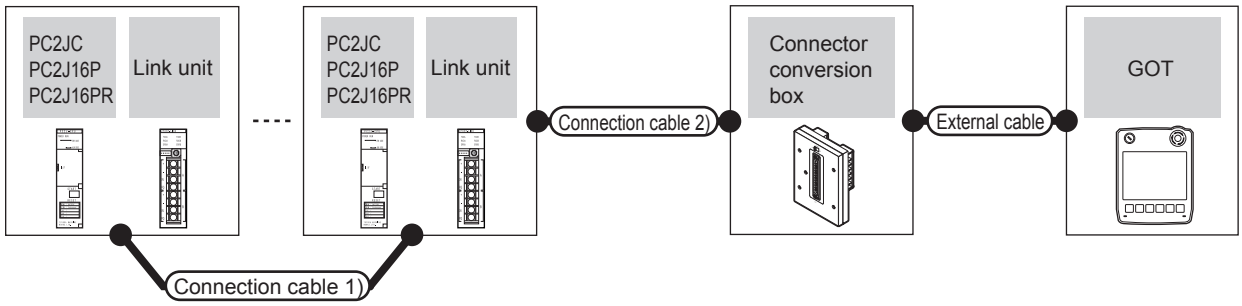

PLC			Connection cable 1)	Connection cable 2)	Connector conversion box	External cable	GOT model	Total distance *2	Number of connectable equipment
Model	Link unit*1	Communication type	Cable model Connection diagram number	Cable model Connection diagram number					
PC2JC PC2J16P PC2J16PR	PC/CMP2-LINK	RS-422	User preparing RS422 connection diagram 4)	User preparing RS422 connection diagram 7)	GT11H-CNB-37S	GT11H-C30-37P(3m) GT11H-C60-37P(6m) GT11H-C100-37P(10m)	GT14 Handy	13m	10 PLCs for 1 GOT

*1 Product manufactured by JTEKT Corporation. For details of the product, contact JTEKT Corporation.
*2 The distance from the GOT to the PLC (Connection cable 1) + Connection cable 2) + External cable)

(2) When using the external cable (GT11H-C□□□-37P)

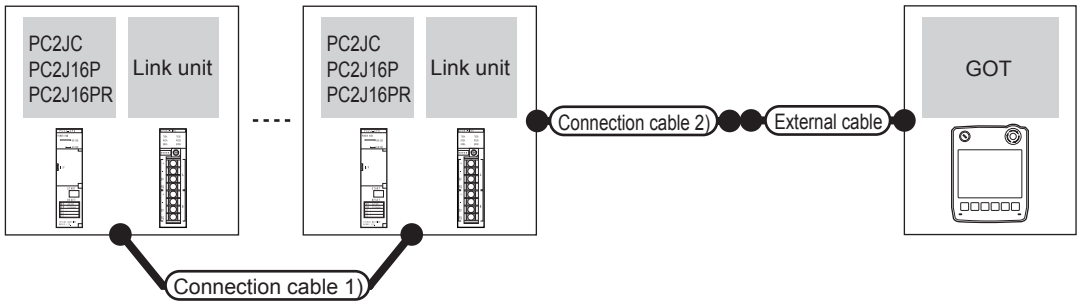

PLC			Connection cable 1)	Connection cable 2)	External cable	GOT model	Total distance *2	Number of connectable equipment
Model	Link unit*1	Communication type	Cable model Connection diagram number	Cable model Connection diagram number				
PC2JC PC2J16P PC2J16PR	PC/CMP2-LINK	RS-422	User preparing RS422 connection diagram 4)	User preparing RS422 connection diagram 8)	GT11H-C30-37P(3m) GT11H-C60-37P(6m) GT11H-C100-37P(10m)	GT14 Handy	13m	10 PLCs for 1 GOT

*1 Product manufactured by JTEKT Corporation. For details of the product, contact JTEKT Corporation.
*2 The distance from the GOT to the PLC (Connection cable 1) + Connection cable 2) + External cable)

(3) When using the external cable (GT11H-C□□□)

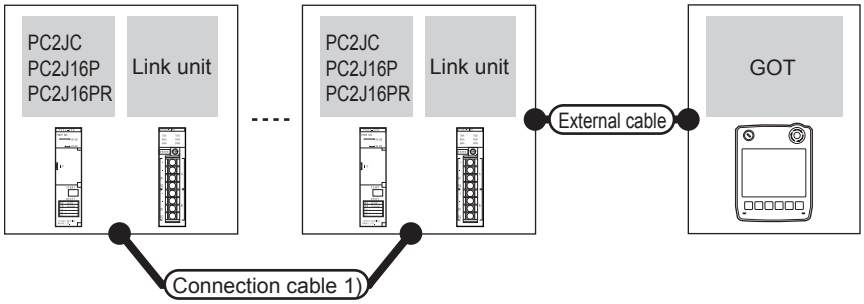

PLC			Connection cable 1)	External cable	GOT model	Total distance *2	Number of connectable equipment
Model	Link unit*1	Communication type	Cable model Connection diagram number				
PC2JC PC2J16P PC2J16PR	PC/CMP2-LINK	RS-422	User preparing RS422 connection diagram 4)	GT11H-C30(3m) GT11H-C60(6m) GT11H-C100(10m) User preparing RS422 connection diagram 9)	GT14 Handy	13m	10 PLCs for 1 GOT

*1 Product manufactured by JTEKT Corporation. For details of the product, contact JTEKT Corporation.
*2 The distance from the GOT to the PLC (Connection cable 1) + External cable)

■ For the RS-232 connection (via an interface converter)

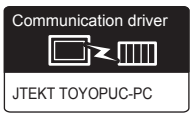

(1) When using the connector conversion box

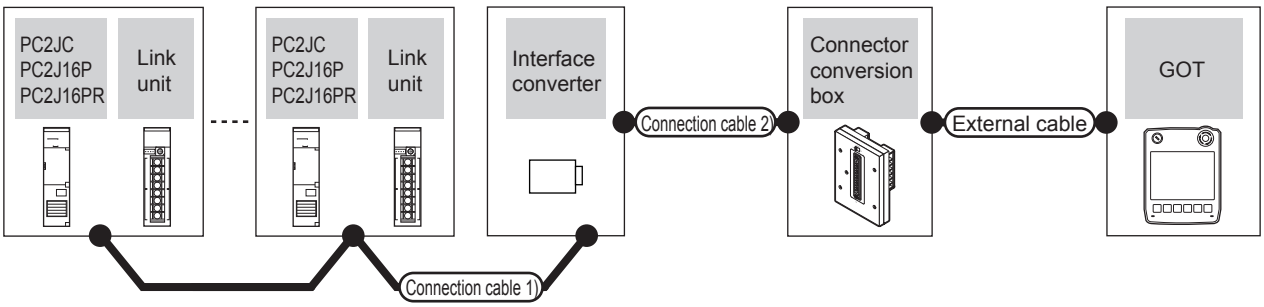

PLC			Connection cable 1)		RS-232/RS-422 Interface converter*1	Connection cable 2)	Connector conversion box	External cable	GOT model	Total distance *2	Number of connectable equipment
Model	Link unit*1	Communication type	Cable model Connection diagram number	Max. distance		Cable model Connection diagram number					
PC2JC PC2J16P PC2J16PR	-	RS-232	User preparing RS422 connection diagram 1)	500m	TXU-2051	GT09-C30R21201-25P (3m) or User preparing RS232 connection diagram 1)	GT11H-CNB-37S	GT11H-C30-37P (3m)	GT14 Handy	6m	32 PLCs for 1 GOT
	PC/CMP-LINK 2PORT-LINK	RS-232	User preparing RS422 connection diagram 2)								
	PC/CMP2-LINK	RS-232	User preparing RS422 connection diagram 3)								

*1 Product manufactured by JTEKT Corporation. For details of the product, contact JTEKT Corporation.
*2 The distance from the GOT to the interface converter (Connection cable 2) + External cable)

(2) When using the external cable (GT11H-C□□□-37P)

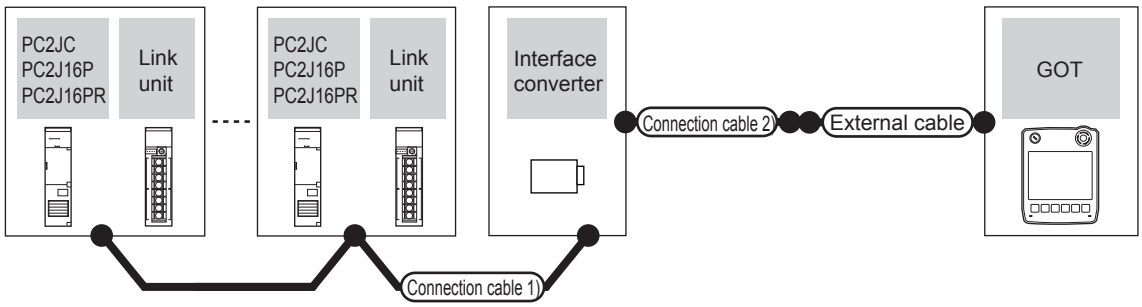

PLC			Connection cable 1)		RS-232/RS-422 Interface converter*1	Connection cable 2)	External cable	GOT model	Total distance *2	Number of connectable equipment
Model	Link unit*1	Communication type	Cable model Connection diagram number	Max. distance		Cable model Connection diagram number				
PC2JC PC2J16P PC2J16PR	-	RS-232	User preparing RS422 connection diagram 1)	500m	TXU-2051	User preparing RS232 connection diagram 2)	GT11H-C30-37P (3m)	GT14 Handy	6m	32 PLCs for 1 GOT
	PC/CMP-LINK 2PORT-LINK	RS-232	User preparing RS422 connection diagram 2)							
	PC/CMP2-LINK	RS-232	User preparing RS422 connection diagram 3)							

*1 Product manufactured by JTEKT Corporation. For details of the product, contact JTEKT Corporation.
*2 The distance from the GOT to the interface converter (Connection cable 2) + External cable)

(3) When using the external cable (GT11H-C□□□)

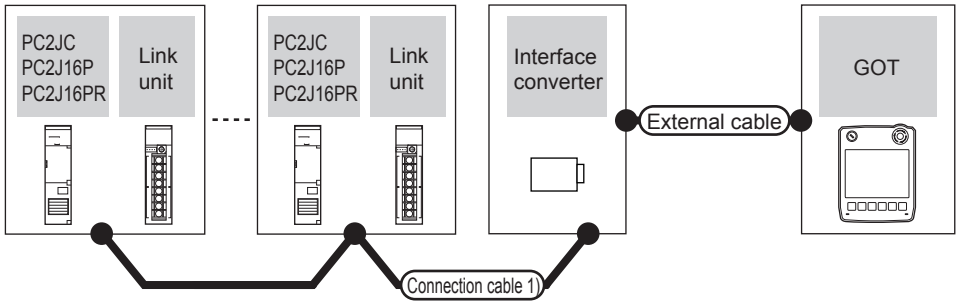

PLC			Connection cable 1)		RS-232/RS-422 Interface converter*1	External cable	GOT model	Total distance *2	Number of connectable equipment
Model	Link unit*1	Communication type	Cable model Connection diagram number	Max. distance					
PC2JC PC2J16P PC2J16PR	-	RS-232	User preparing RS422 connection diagram 1)	500m	TXU-2051	GT11H-C30(3m) GT11H-C60(6m) User preparing RS232 connection diagram 3)	GT14 Handy	6m	32 PLCs for 1 GOT
	PC/CMP-LINK 2PORT-LINK	RS-232	User preparing RS422 connection diagram 2)						
	PC/CMP2-LINK	RS-232	User preparing RS422 connection diagram 3)						

*1 Product manufactured by JTEKT Corporation. For details of the product, contact JTEKT Corporation.
*2 The distance from the GOT to the interface converter (External cable)

37.3 Connection Diagram

The following diagram shows the connection between the GOT and the PLC.

37.3.1 RS-232 cable

■ Connection diagram

RS232 connection diagram 1)

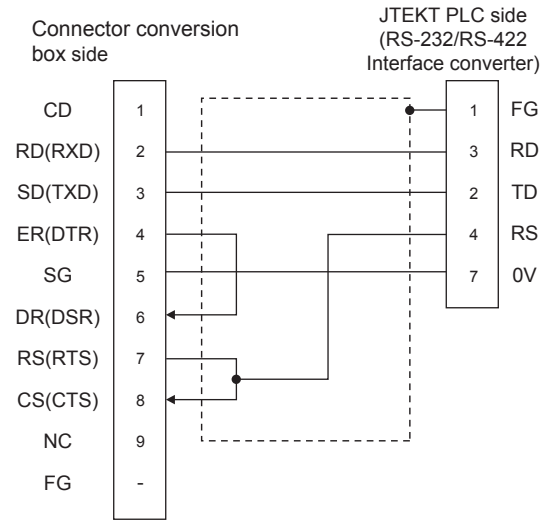

RS232 connection diagram 2)

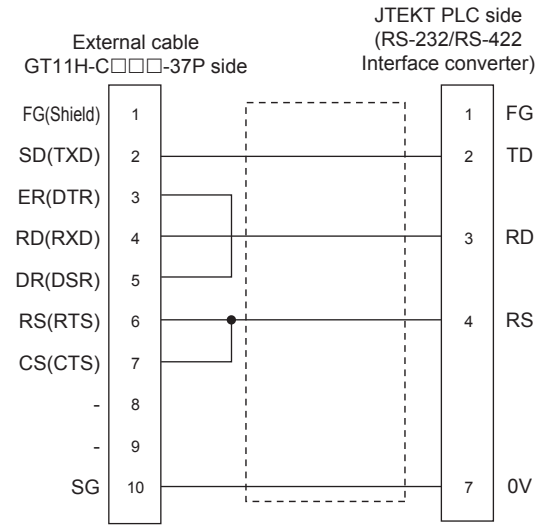

RS232 connection diagram 3)

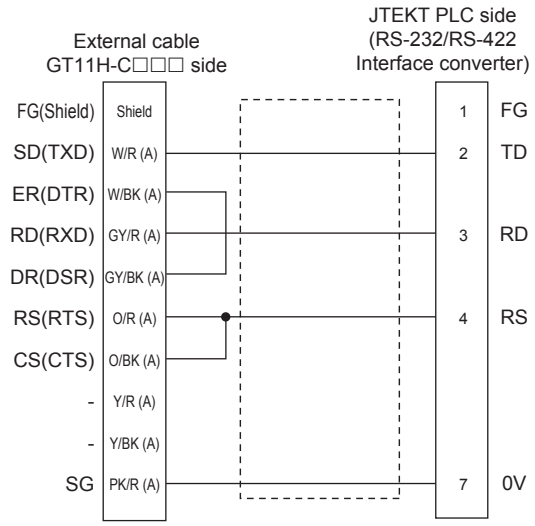

■ Precautions when preparing a cable

(1) Cable length
The total distance (between the GOT and a controller) of RS-232 cable must be 6m or less.

(2) Connector conversion box side connector
For the connector conversion box side connector, refer to the following.

☞ 6.6 Connector Conversion Box

(3) External cable side connector
For the connector specifications of the external cable side, refer to the following.

☞ 8.2 External Cable, Relay Cable

(4) JTEKT PLC side connector
Use the connector compatible with the JTEKT PLC side module.
For details, refer to the JTEKT PLC user's manual.

37.3.2 RS-422 cable

■ Connection diagram

RS422 connection diagram 1)

(For PC3JG-P/PC3JG/PC3JD/PC3JD-C)

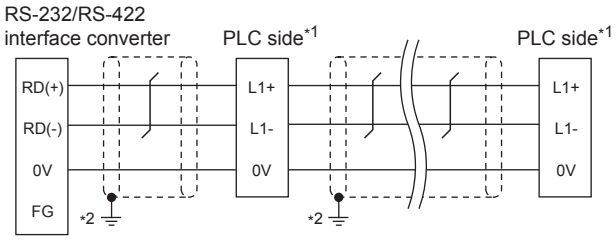

*1 Terminating resistors should not be provided for a PLC and an RS-232/RS-422 interface converter which will be terminals.

*2 Connect FG grounding to the appropriate part of a cable shield line.

(For PC3J/PC3JL)

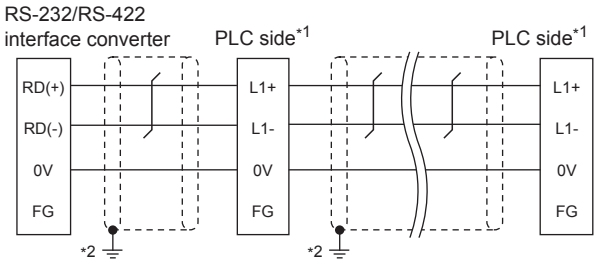

*1 Terminating resistors should not be provided for a PLC and an RS-232/RS-422 interface converter which will be terminals.

*2 Connect FG grounding to the appropriate part of a cable shield line.

(For PC2JC/PC2J16P, PC2J16PR)

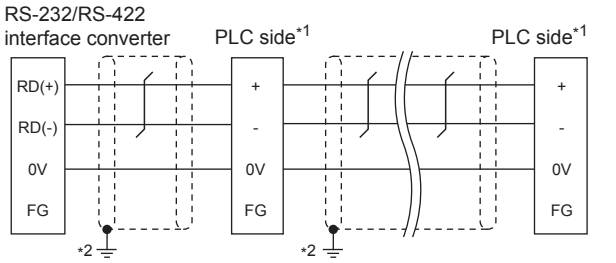

*1 Terminating resistors should not be provided for a PLC and an RS-232/RS-422 interface converter which will be terminals.

*2 Connect FG grounding to the appropriate part of a cable shield line.

RS422 connection diagram 2)

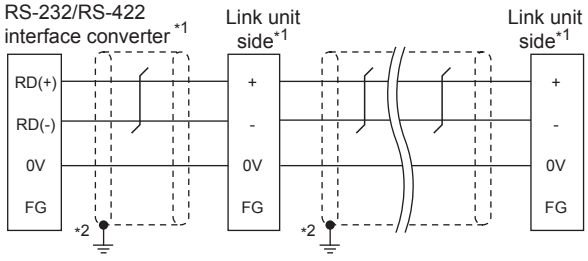

*1 Terminating resistors should not be provided for a PLC and an RS-232/RS-422 interface converter which will be terminals.

*2 Connect FG grounding to the appropriate part of a cable shield line.

RS422 connection diagram 3)

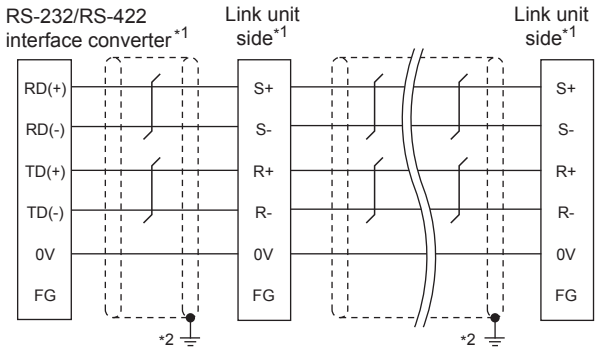

*1 Terminating resistors should not be provided for a PLC and an RS-232/RS-422 interface converter which will be terminals.

*2 Connect FG grounding to the appropriate part of a cable shield line.

RS422 connection diagram 4)

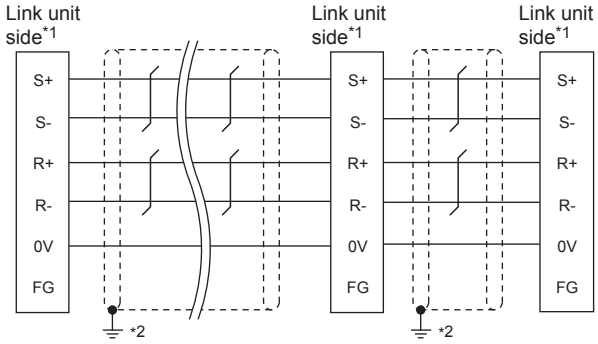

*1 Terminating resistors should not be provided for a PLC and an RS-232/RS-422 interface converter which will be terminals.

*2 Connect FG grounding to the appropriate part of a cable shield line.

RS422 connection diagram 5)

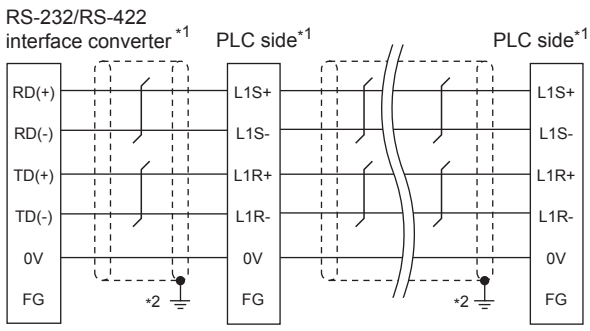

*1 Terminating resistors should not be provided for a PLC and an RS-232/RS-422 interface converter which will be terminals.

*2 Connect FG grounding to the appropriate part of a cable shield line.

RS422 connection diagram 6)

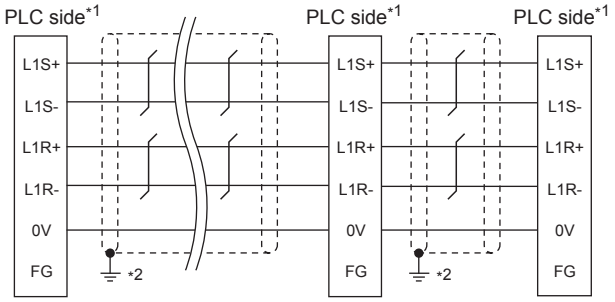

*1 Terminating resistors should not be provided for a PLC and an RS-232/RS-422 interface converter which will be terminals.
*2 Connect FG grounding to the appropriate part of a cable shield line.

RS422 connection diagram 7)

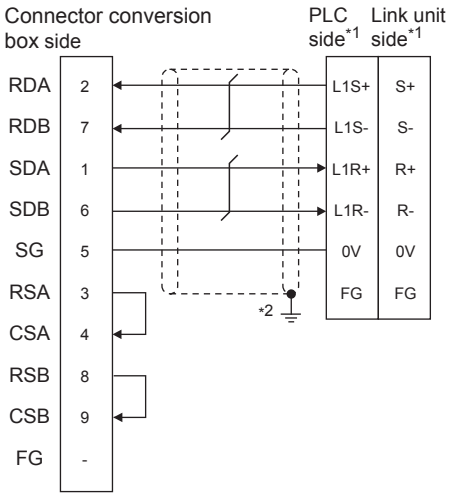

*1 Terminating resistors should not be provided for a PLC and an RS-232/RS-422 interface converter which will be terminals.
*2 Connect FG grounding to the appropriate part of a cable shield line.

RS422 connection diagram 8)

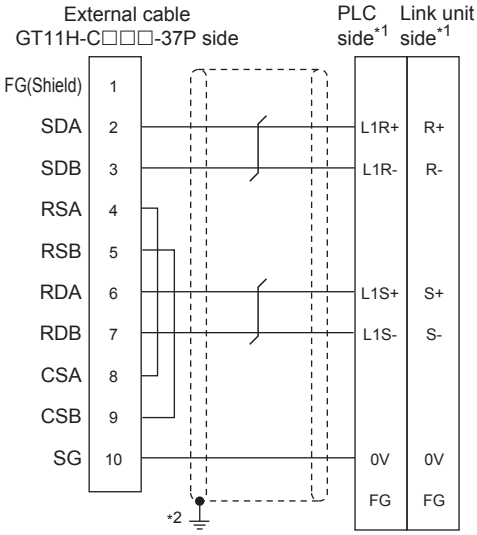

*1 Terminating resistor should be provided for a PLC which will be a terminal.
*2 Connect FG grounding to the appropriate part of a cable shield line.

RS422 connection diagram 9)

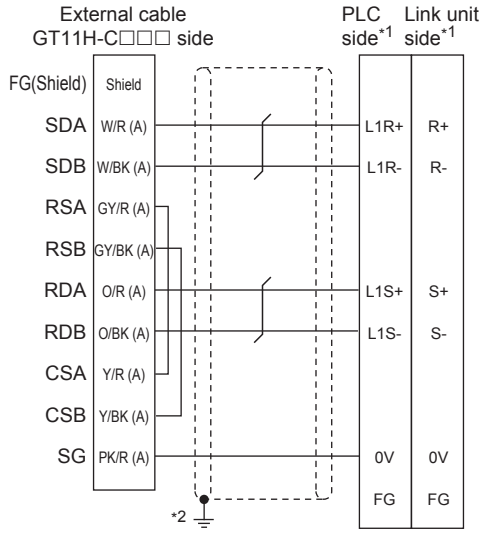

*1 Terminating resistor should be provided for a PLC which will be a terminal.
*2 Connect FG grounding to the appropriate part of a cable shield line.

■ Precautions when preparing a cable

(1) Cable length

(a) The length of the RS-422 cable used for connecting the connected equipment to the communication converter
The length of the RS-422 cable must be 500m or less.

(b) The length of the RS-422 cable used for connecting the connected equipment to the GOT.
The total distance (between GOT and controllers) of RS-422 cable must be 13m or less.

(2) Connector conversion box side connector
For the connector conversion box side connector, refer to the following.

☞ 6.6 Connector Conversion Box

(3) External cable side connector
For the connector specifications of the external cable side, refer to the following.

☞ 8.2 External Cable, Relay Cable

(4) JTEKT PLC side connector
Use the connector compatible with the JTEKT PLC side module.
For details, refer to the JTEKT PLC user's manual.

37.4 GOT Side Settings

37.4.1 Setting communication interface (Communication settings)

Set the channel of the equipment connected to the GOT.

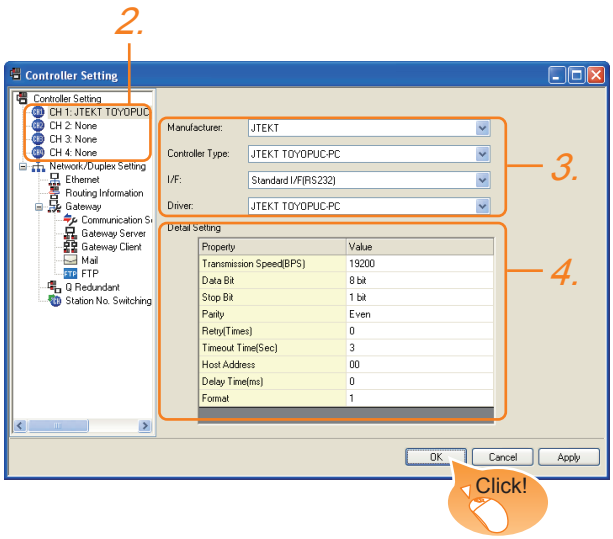

1. Select [Common] → [Controller Setting] from the menu.
2. The Controller Setting window is displayed. Select the channel to be used from the list menu.
3. Set the following items.
   - Manufacturer: JTEKT
   - Controller Type: JTEKT TOYOPUC-PC
   - I/F: Interface to be used
   - Driver: JTEKT TOYOPUC-PC
4. The detailed setting is displayed after Manufacturer, Controller Type, I/F, and Driver are set.
   Make the settings according to the usage environment.
   37.4.2 Communication detail settings

Click the OK button when settings are completed.

POINT

The settings of connecting equipment can be confirmed in [I/F Communication Setting].
For details, refer to the following.
18.1.2 I/F communication setting

37.4.2 Communication detail settings

Make the settings according to the usage environment.

Item	Description	Range
Transmission Speed	Set this item when change the transmission speed used for communication with the connected equipment. (Default: 19200bps)	9600bps, 19200bps, 38400bps, 57600bps, 115200bps
Data Bit	Set this item when change the data length used for communication with the connected equipment. (Default: 8bit)	7bit/8bit
Stop Bit	Specify the stop bit length for communications. (Default: 1bit)	1bit/2bits
Parity	Specify whether or not to perform a parity check, and how it is performed during communication. (Default: Even)	None Even Odd
Retry	Set the number of retries to be performed when a communication error occurs. (Default: 0time)	0 to 5times
Timeout Time	Set the time period for a communication to time out. (Default: 3sec)	3 to 30sec
Delay Time	Set this item to adjust the transmission timing of the communication request from the GOT. (Default: 0)	0 to 300ms
Host Address	Specify the host address (station No. of the GOT to which the PLC is connected) in the connected network. (Default: 00)	00 to 37 (Octal)
Format	Select the communication format. (Default: 1) format 1: PC3J extended function incompliant format 2: PC3J extended function compliant	1/2

POINT

(1) Format setting
The compatible format of PLC differs depending on model.

Model	Compatible format
PC2J, PC2JS, PC2JR, PC2JC, PC2J16P, PC2J16PR	Format 1 only
PC3JG, PC3JG-P, PC3JD, PC3JD-C, PC3J, PC3JL	Format 1 or Format 2

For details of PC3J extended function, refer to the following manual.
JTEKT PLC user's manual

(2) Communication interface setting by Utility
The communication interface setting can be changed on the Utility's [Communication setting] after writing [Communication Settings] of project data.
For details on the Utility, refer to the following manual.
11. COMMUNICATION INTERFACE SETTING (COMMUNICATION SETTING)

(3) Precedence in communication settings
When settings are made by GT Designer3 or the Utility, the latest setting is effective.

37.5 PLC Side Setting

POINT

JTEKT PLC

For details of JTEKT PLCs, refer to the following manuals.

☞ JTEKT PLC user's manual

Model		Refer to
PLC CPU	PC3JG, PC3JG-P, PC3JD, PC3JD-C, PC3J, PC3JL, PC2J, PC2JS, PC2JR	37.5.1
	PC2JC	37.5.2
	PC2J16P, PC2J16RR	37.5.3
RS-232/RS-422 interface converter	TXU-2051	37.5.4
Link unit	PC/CMP-LINK	37.5.5
	2PORT-LINK	
	PC/CMP2-LINK	

37.5.1 Connecting to PC3JG, PC3JG-P, PC3JD, PC3JD-C, PC3J, PC3JL, PC2J, PC2JS or PC2JR

■ Communication settings

Make the communication settings using the PLC peripheral device (PCwin).

Item	Set value
Transmission speed*1	9600bps, 19200bps, 38400bps
Data bit*1	8bits, 7bits
Parity bit	Even (fixed)
Stop bit*1	1bit, 2bits
Station No.*2	0 to 37 (Octal)
2-wire/4-wire type*3	2-wire type or 4-wire type

*1 Adjust the settings with GOT settings.
*2 Avoid duplication of the station No. with any of the other units.
*3 Make the settings referring to the following connection diagram.

☞ 37.3.2 RS-422 cable

37.5.2 Connecting to PC2JC

■ Communication settings

Make the communication settings using each setting switch.

For the detail settings, refer to the following manual.

☞ JTEKT PLC user's manual

Item	Set value
Transmission speed*1	9600bps, 19200bps
Data bit*1	8bits, 7bits
Stop bit*1	1bit, 2bits
Station No.*1	0 to 37 (Octal)

*1 Adjust the settings with GOT settings.

■ Settings by switch

Make the communication settings using each setting switch.

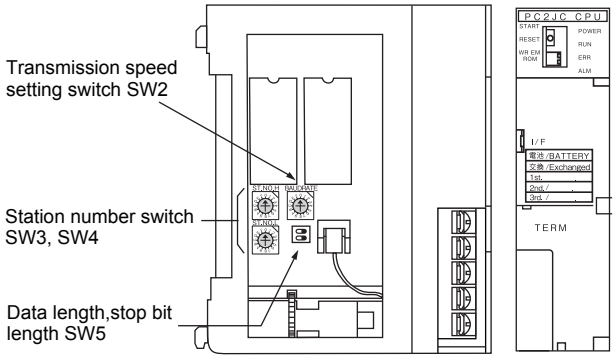

(1) Setting of the station No.

Set the station No. between 00 and 37 (Octal).

Switch name	Station number setting
SW3	Upper digit
SW4	Lower digit

(2) Transmission speed settings

Switch name	Switch position	Transmission speed (bps)
SW2	1	19200
	2	9600

(3) Settings of data length and stop bit length

Switch name	Setting item	Set value	Switch No.	
			2	1
SW5	Data bit	8bits	OFF	
		7bits	ON	
	Stop bit length	2bits		OFF
		1bit		ON

37.5.3 Connecting to PC2J16P or PC2J16PR

■ Communication settings

Make the communication settings using each setting switch.

For the detail settings, refer to the following manual.

☞ JTEKT PLC user's manual

Item	Set value
Transmission speed*1	9600bps, 19200bps
Data bit*1	8bits, 7bits
Stop bit*1	1bit, 2bits
Station No.*1	0 to 37 (Octal)
Selection of module type	Computer link

*1 Adjust the settings with GOT settings.

■ Settings by switch

Make the communication settings using each setting switch.

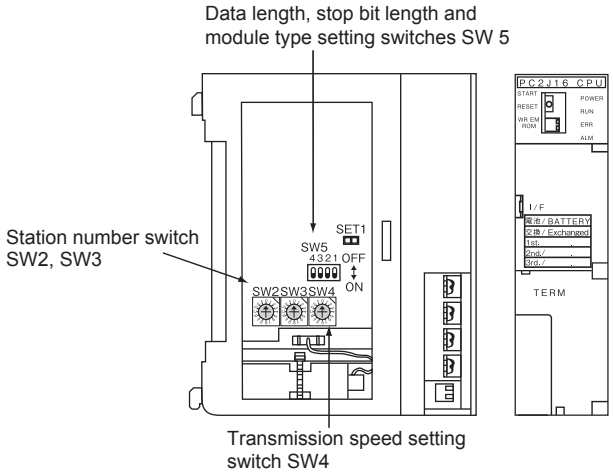

(1) Setting of the station No.

Set the station No. between 00 and 37 (Octal).

Switch name	Station number setting
SW2	Upper digit
SW3	Lower digit

(2) Transmission speed settings

Switch name	Switch position	Transmission speed (bps)
SW4	1	19200
	2	9600

(3) Settings of data length, stop bit length and module type

Switch name	Setting item	Set value	Switch No.		
			4	3	2
SW5	Data bit	8bits	OFF		
		7bits	ON		
	Stop bit length	2bits		OFF	
		1bit		ON	
	Module type	Computer link			OFF

37.5.4 RS-232/RS-422 interface converter setting

■ Communication settings

Make the communication settings by the setting switch of the RS-232/RS-422 interface converter.

Item	Set value
Transmission speed*1	9600bps, 19200bps
2-wire/4-wire type*2	2-wire type or 4-wire type
Echo back	OFF

*1 Adjust the settings with GOT settings.

*2 Set referring to the RS-422 connection diagram. For details, refer to the following.

☞ 37.3.2 RS-422 cable

■ Settings by switch

Make the communication settings by each setting switch of the RS-232/RS-422 interface converter.

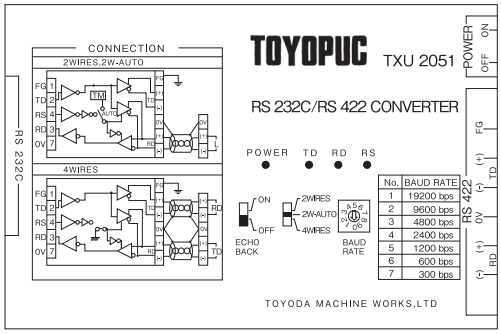

(1) Transmission speed settings

Transmission speed (bps)	Switch position
9600	2
19200	1

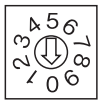

(2) Mode setting switch

Mode	Switch position
2-wire	2W-AUTO
4-wire type	4 WIRES

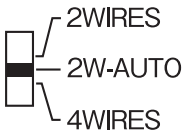

(3) Echoback setting switch

Setting	Switch position
OFF	OFF

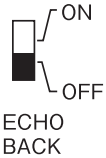

37.5.5 Link unit setting

■ Communication settings

Make the communication settings using each setting switch of the link unit.
For the detail settings, refer to the following manual.

☞ User's Manual of the JTEKT link unit

Item	Set value
Transmission speed*1	9600bps, 19200bps
Data bit*1	8bits, 7bits
Stop bit*1	1bit, 2bits
Station No.*1	0 to 37 (Octal)
Selection of module type	Computer link
Selection of 2-wire type or 4- wire type*2	2-wire type or 4-wire type

*1 Adjust the settings with GOT settings.
*2 Set referring to the RS-422 connection diagram. For details, refer to the following.

☞ 37.3.2 RS-422 cable

■ Settings by switch

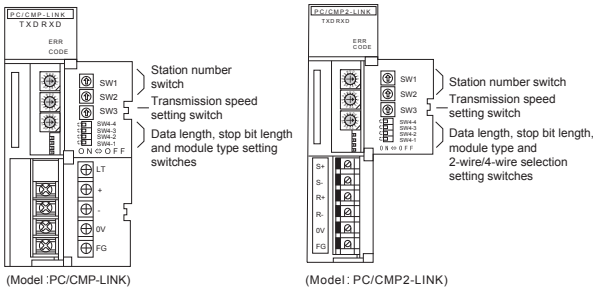

(Model :PC/CMP-LINK) (Model: PC/CMP2-LINK)

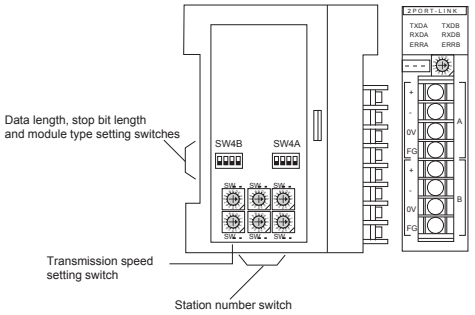

(Model :2PORT-LINK)

(1) Setting of the station No.
Set the station No. between 00 and 37 (Octal).

Switch name	Station number setting
SW1	Upper digit
SW2	Lower digit

(2) Transmission speed settings

Switch name	Switch position	Transmission speed (bps)
SW3	2	9600
	1	19200

(3) Data length, stop bit length, module type and 2-wire/4-wire type communication selection setting

Switch name	Setting item	Set value	Switch No.			
			4	3	2	1
SW4	Data bit	8bits	OFF			
		7bits	ON			
	Stop bit length	2bits		OFF		
		1bit		ON		
	Module type	PLC link unit			OFF	
		Computer link			ON	
	2-wire type/4-wire type communication selection*1	2-wire type communication				OFF
		4-wire type communication				ON

*1 The setting is available only for the link unit (Model: PC/CMP2-LINK).

37.5.6 Station number setting

Set each station number so that no station number overlaps.
The station number can be set without regard to the cable connection order. There is no problem even if station numbers are not consecutive.

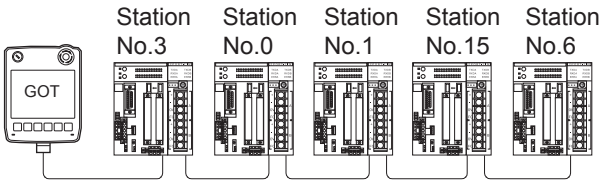

Examples of station number setting

(1) Direct specification
Specify the station No. of the PLC to be changed when setting device.

Specification range
00 to 37 (Octal)

37.6 Device Range that Can Be Set

For details on the device range of controllers that can be used on GT14 Handy, refer to the following manuals.

☞ GT Designer3 Version1 Screen Design Manual (Fundamentals)

☞ GOT1000 Series Connection Manual (Non-Mitsubishi Products 1) for GT Works3

37.7 Precautions

■ Station No. settings of the PLC side

In the system configuration, the PLC with the station number set with the host address must be included. For details of host address setting, refer to the following.

☞ 37.4.1 Setting communication interface (Communication settings)

■ GOT clock control

The GOT clock function is available only for the PLC with the station number set with the host address.
For details of host address setting, refer to the following.

☞ 37.4.1 Setting communication interface (Communication settings)

■ System Configuration

If the system is configured by mixing the PC3J extended function compliant PLC with the PC3J extended function incompliant PLC, normal communication may not be performed. Unify the PLCs into PC3J extended function compliant or PC3J extended function incompliant to configure the system.

■ System alarm

The system alarm can be displayed only for the PLC set with a host address. When connected to the PC3J extended function compliant PLC, only the system alarm of program No. 1 can be displayed.

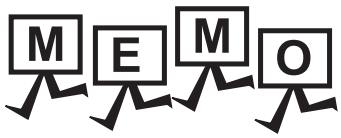
MEMO

38. CONNECTION TO SHARP PLC

38.1 Connectable Model List

The following table shows the connectable models.

Model	Clock	Communication type	GT14 Handy	Refer to
JW-21CU	×	RS-422	○	38.2.1
JW-22CU	○	RS-232 RS-422		
JW-31CUH	×	RS-422	○	38.2.2
JW-32CUH	○	RS-232 RS-422		
JW-33CUH	○			
JW-50CUH	×	RS-422	○	38.2.3
JW-70CUH	○*1	RS-232 RS-422		
JW-100CUH	○*1			
JW-100CU	○			
Z-512J	○	RS-232 RS-422	○	38.2.4

*1 When the link unit (ZW-10CM) is used in JW-70CUH/100CUH, the clock function is not available.

38.2 System Configuration

38.2.1 Connecting to JW-21CU or JW-22CU

Communication driver
SHARP JW

(1) When using the connector conversion box

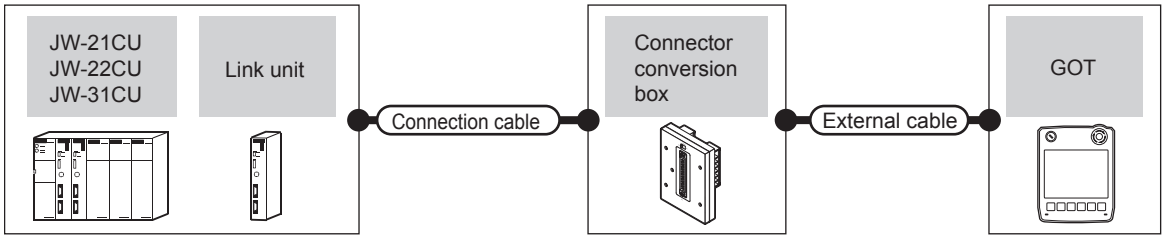

PLC			Connection cable	Connector conversion box	External cable	GOT model	Total distance	Number of connectable equipment
Model	Link unit*1	Communication type	Cable model Connection diagram number					
JW-22CU	-	RS-232	GT09-C30R20601-15P(3m) or User preparing RS232 connection diagram 1)	GT11H-CNB-37S	GT11H-C30-37P(3m)	GT14 Handy	6m	1 GOT for 1 PLC
		RS-422	GT09-C30R40601-15P(3m) GT09-C100R40601-15P(10m) or User preparing RS422 connection diagram 1)	GT11H-CNB-37S	GT11H-C30-37P(3m) GT11H-C60-37P(6m) GT11H-C100-37P(10m)	GT14 Handy	13m	
JW-21CU JW-22CU	JW-21CM	RS-422	GT09-C30R40603-6T(3m) GT09-C100R40103-5T (10m) or User preparing RS422 connection diagram 7)	GT11H-CNB-37S	GT11H-C30-37P(3m) GT11H-C60-37P(6m) GT11H-C100-37P(10m)	GT14 Handy	13m	

*1 Product manufactured by SHARP Corporation.
For details of this product, contact SHARP Corporation.

(2) When using the external cable (GT11H-C□□□-37P)

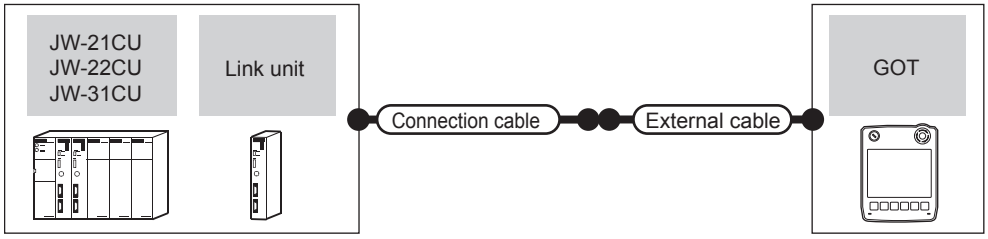

PLC			Connection cable	External cable	GOT model	Total distance	Number of connectable equipment
Model	Link unit*1	Communication type	Cable model Connection diagram number				
JW-22CU	-	RS-232	User preparing RS232 connection diagram 2)	GT11H-C30-37P(3m)	GT14 Handy	6m	1 GOT for 1 PLC
		RS-422	User preparing RS422 connection diagram 2)	GT11H-C30-37P(3m) GT11H-C60-37P(6m) GT11H-C100-37P(10m)	GT14 Handy	13m	
JW-21CU JW-22CU	JW-21CM	RS-422	User preparing RS422 connection diagram 8)	GT11H-C30-37P(3m) GT11H-C60-37P(6m) GT11H-C100-37P(10m)	GT14 Handy	13m	

*1 Product manufactured by SHARP Corporation.
For details of this product, contact SHARP Corporation.

(3) When using the external cable (GT11H-C□□□)

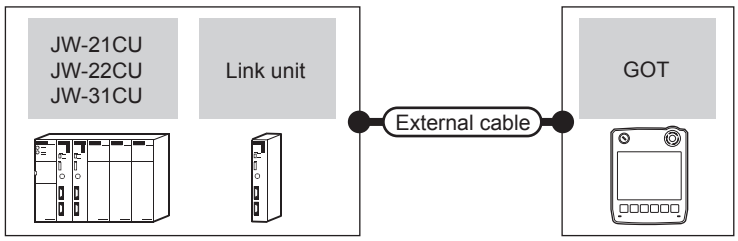

PLC			External cable	GOT model	Total distance	Number of connectable equipment
Model	Link unit*1	Communication type				
JW-22CU	-	RS-232	GT11H-C30(3m) GT11H-C60(6m) User preparing RS232 connection diagram 3)	GT14 Handy	6m	1 GOT for 1 PLC
		RS-422	GT11H-C30(3m) GT11H-C60(6m) GT11H-C100(10m) User preparing RS422 connection diagram 3)	GT14 Handy	13m	
JW-21CU JW-22CU	JW-21CM	RS-422	GT11H-C30(3m) GT11H-C60(6m) GT11H-C100(10m) User preparing RS422 connection diagram 9)	GT14 Handy	13m	

*1 Product manufactured by SHARP Corporation.
For details of this product, contact SHARP Corporation.

38.2.2 Connecting to JW-31CUH, JW-32CUH or JW-33CUH

Communication driver
SHARP JW

(1) When using the connector conversion box

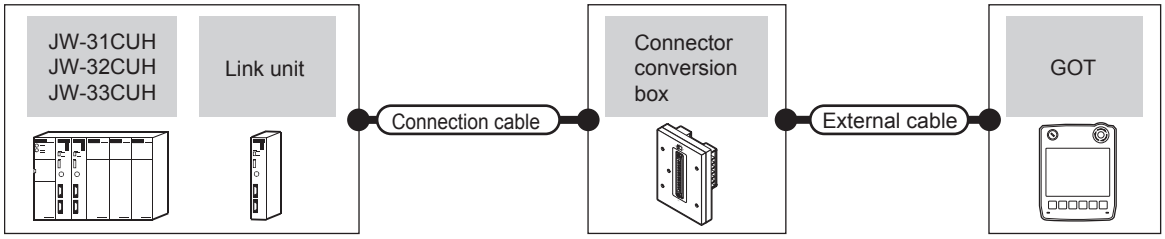

PLC			Connection cable	Connector conversion box	External cable	GOT model	Total distance	Number of connectable equipment
Model	Link unit*1	Communication type	Cable model Connection diagram number					
JW-32CUH JW-33CUH	-	RS-232	GT09-C30R20602-15P(3m) or User preparing RS232 connection diagram 4)	GT11H-CNB-37S	GT11H-C30-37P(3m)	GT14 Handy	6m	1 GOT for 1 PLC
		RS-422	GT09-C30R40602-15P(3m) GT09-C100R40602-15P(10m) or User preparing RS422 connection diagram 4)	GT11H-CNB-37S	GT11H-C30-37P(3m) GT11H-C60-37P(6m) GT11H-C100-37P(10m)	GT14 Handy	13m	
JW-31CUH JW-32CUH JW-33CUH	JW-21CM	RS-422	GT09-C30R40603-6T(3m) GT09-C100R40103-5T (10m) or User preparing RS422 connection diagram 7)	GT11H-CNB-37S	GT11H-C30-37P(3m) GT11H-C60-37P(6m) GT11H-C100-37P(10m)	GT14 Handy	13m	

*1 Use the link unit supporting JW-31CUH, JW-32CUH or JW-33CUH.
Product manufactured by SHARP Corporation.
For details of this product, contact SHARP Corporation.

(2) When using the external cable (GT11H-C□□□-37P)

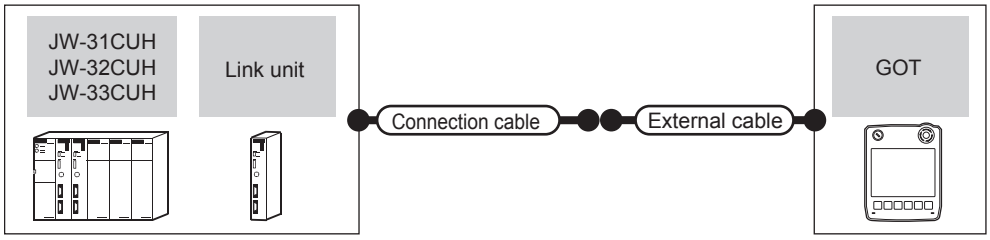

PLC			Connection cable	External cable	GOT model	Total distance	Number of connectable equipment
Model	Link unit*1	Communication type	Cable model Connection diagram number				
JW-32CUH JW-33CUH	-	RS-232	User preparing RS232 connection diagram 5)	GT11H-C30-37P(3m)	GT14 Handy	6m	1 GOT for 1 PLC
		RS-422	User preparing RS422 connection diagram 5)	GT11H-C30-37P(3m) GT11H-C60-37P(6m) GT11H-C100-37P(10m)	GT14 Handy	13m	
JW-31CUH JW-32CUH JW-33CUH	JW-21CM	RS-422	User preparing RS422 connection diagram 8)	GT11H-C30-37P(3m) GT11H-C60-37P(6m) GT11H-C100-37P(10m)	GT14 Handy	13m	

*1 Use the link unit supporting JW-31CUH, JW-32CUH or JW-33CUH.
Product manufactured by SHARP Corporation.
For details of this product, contact SHARP Corporation.

(3) When using the external cable (GT11H-C□□□)

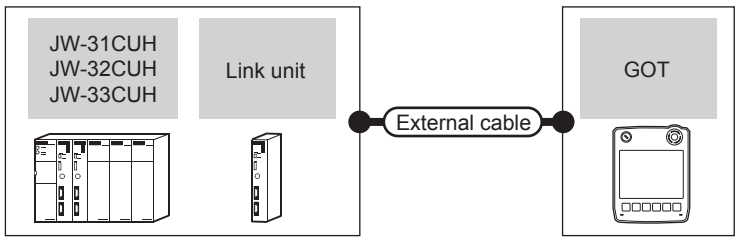

PLC			External cable	GOT model	Total distance	Number of connectable equipment
Model	Link unit*1	Communication type				
JW-32CUH JW-33CUH	-	RS-232	GT11H-C30(3m) GT11H-C60(6m) User preparing RS232 connection diagram 6)	GT14 Handy	6m	1 GOT for 1 PLC
		RS-422	GT11H-C30(3m) GT11H-C60(6m) GT11H-C100(10m) User preparing RS422 connection diagram 6)	GT14 Handy	13m	
JW-31CUH JW-32CUH JW-33CUH	JW-21CM	RS-422	GT11H-C30(3m) GT11H-C60(6m) GT11H-C100(10m) User preparing RS422 connection diagram 9)	GT14 Handy	13m	

*1 Use the link unit supporting JW-31CUH, JW-32CUH or JW-33CUH.
Product manufactured by SHARP Corporation.
For details of this product, contact SHARP Corporation.

38.2.3 Connecting to JW-50CUH, JW-70CUH, JW-100CUH or JW-100CU

Communication driver
SHARP JW

(1) When using the connector conversion box

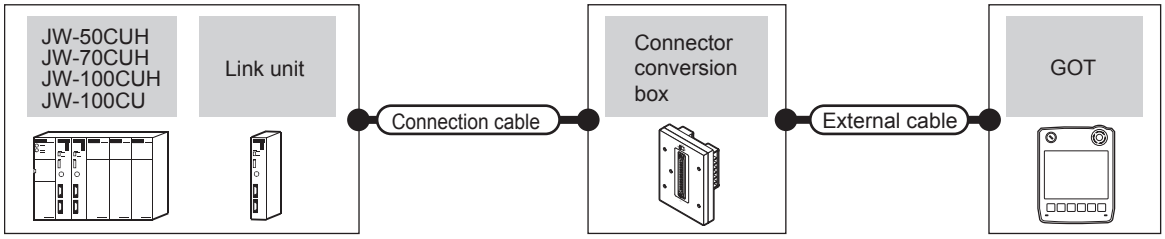

PLC			Connection cable	Connector conversion box	External cable	GOT model	Total distance	Number of connectable equipment
Model	Link unit*1	Communication type	Cable model Connection diagram number					
JW-70CUH JW-100CUH JW-100CU	-	RS-232	GT09-C30R20601-15P(3m) or User preparing RS232 connection diagram 1)	GT11H-CNB-37S	GT11H-C30-37P(3m)	GT14 Handy	6m	1 GOT for 1 PLC
		RS-422	GT09-C30R40601-15P(3m) GT09-C100R40601-15P(10m) or User preparing RS422 connection diagram 1)	GT11H-CNB-37S	GT11H-C30-37P(3m) GT11H-C60-37P(6m) GT11H-C100-37P(10m)	GT14 Handy	13m	
JW-50CUH JW-70CUH JW-100CUH JW-100CU	JW-10CM ZW-10CM	RS-422	GT09-C30R40603-6T(3m) GT09-C100R40103-5T (10m) or User preparing RS422 connection diagram 7)	GT11H-CNB-37S	GT11H-C30-37P(3m) GT11H-C60-37P(6m) GT11H-C100-37P(10m)	GT14 Handy	13m	

*1 Product manufactured by SHARP Corporation.
For details of this product, contact SHARP Corporation.

(2) When using the external cable (GT11H-C□□□-37P)

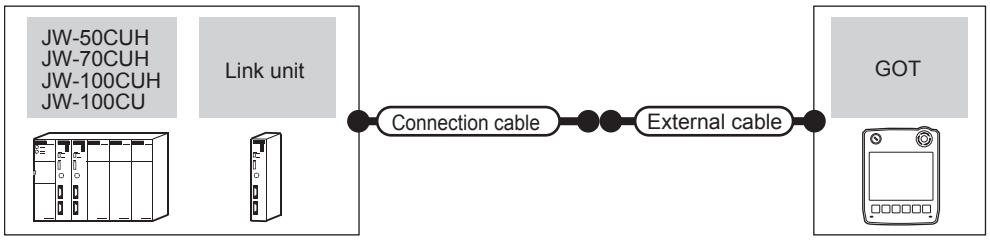

PLC			Connection cable	External cable	GOT model	Total distance	Number of connectable equipment
Model	Link unit*1	Communication type	Cable model Connection diagram number				
JW-70CUH JW-100CUH JW-100CU	-	RS-232	User preparing RS232 connection diagram 2)	GT11H-C30-37P(3m)	GT14 Handy	6m	1 GOT for 1 PLC
		RS-422	User preparing RS422 connection diagram 2)	GT11H-C30-37P(3m) GT11H-C60-37P(6m) GT11H-C100-37P(10m)	GT14 Handy	13m	
JW-50CUH JW-70CUH JW-100CUH JW-100CU	JW-10CM ZW-10CM	RS-422	User preparing RS422 connection diagram 8)	GT11H-C30-37P(3m) GT11H-C60-37P(6m) GT11H-C100-37P(10m)	GT14 Handy	13m	

*1 Product manufactured by SHARP Corporation.
For details of this product, contact SHARP Corporation.

(3) When using the external cable (GT11H-C□□□)

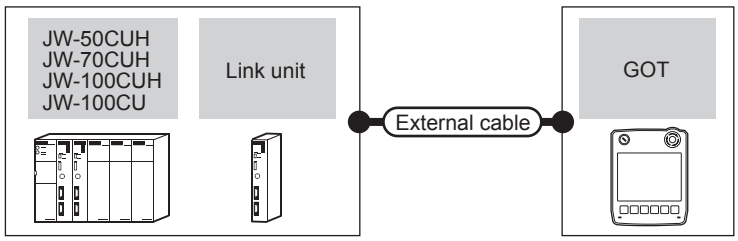

PLC			External cable	GOT model	Total distance	Number of connectable equipment
Model	Link unit*1	Communication type				
JW-70CUH JW-100CUH JW-100CU	-	RS-232	GT11H-C30(3m) GT11H-C60(6m) User preparing RS232 connection diagram 3)	GT14 Handy	6m	1 GOT for 1 PLC
		RS-422	GT11H-C30(3m) GT11H-C60(6m) GT11H-C100(10m) User preparing RS422 connection diagram 3)	GT14 Handy	13m	
JW-50CUH JW-70CUH JW-100CUH JW-100CU	JW-10CM ZW-10CM	RS-422	GT11H-C30(3m) GT11H-C60(6m) GT11H-C100(10m) User preparing RS422 connection diagram 9)	GT14 Handy	13m	

*1 Product manufactured by SHARP Corporation.
For details of this product, contact SHARP Corporation.

38.2.4 Connecting to Z-512J

Communication driver
SHARP JW

(1) When using the connector conversion box

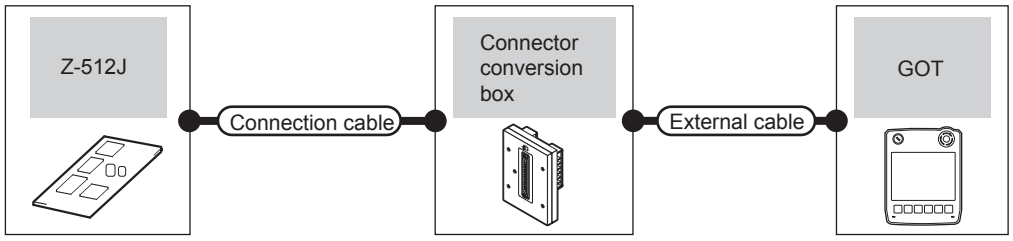

PLC		Connection cable	Connector conversion box	External cable	GOT model	Total distance	Number of connectable equipment
Model	Communication type	Cable model Connection diagram number					
Z-512J	RS-232	GT09-C30R20602-15P(3m) or User preparing RS232 connection diagram 4)	GT11H-CNB-37S	GT11H-C30-37P(3m)	GT14 Handy	6m	1 GOT for 1 PLC
	RS-422	GT09-C30R40602-15P(3m) GT09-C100R40602-15P(10m) or User preparing RS422 connection diagram 4)	GT11H-CNB-37S	GT11H-C30-37P(3m) GT11H-C60-37P(6m) GT11H-C100-37P(10m)	GT14 Handy	13m	

(2) When using the external cable (GT11H-C□□□-37P)

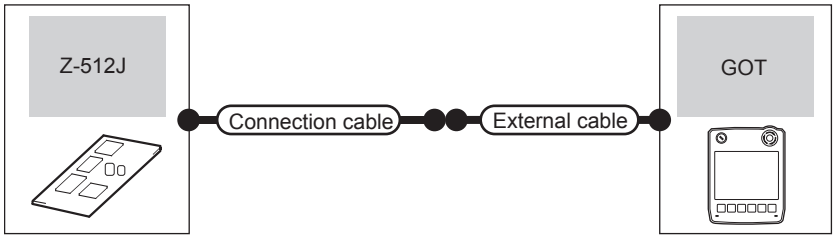

PLC		Connection cable	External cable	GOT model	Total distance	Number of connectable equipment
Model	Communication type	Cable model Connection diagram number				
Z-512J	RS-232	User preparing RS232 connection diagram 5)	GT11H-C30-37P(3m)	GT14 Handy	6m	1 GOT for 1 PLC
	RS-422	User preparing RS422 connection diagram 5)	GT11H-C30-37P(3m) GT11H-C60-37P(6m) GT11H-C100-37P(10m)	GT14 Handy	13m	

(3) When using the external cable (GT11H-C□□□)

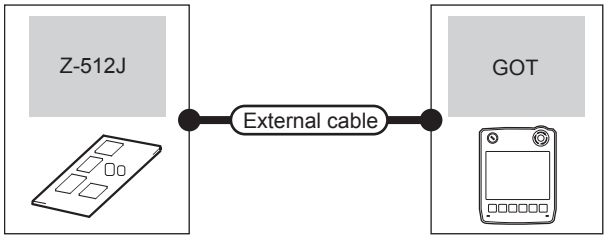

PLC		External cable	GOT model	Total distance	Number of connectable equipment
Model	Communication type				
Z-512J	RS-232	GT11H-C30(3m) GT11H-C60(6m) User preparing RS232 connection diagram 6)	GT14 Handy	6m	1 GOT for 1 PLC
	RS-422	GT11H-C30(3m) GT11H-C60(6m) GT11H-C100(10m) User preparing RS422 connection diagram 6)	GT14 Handy	13m	

38.3 Connection Diagram

The following diagram shows the connection between the GOT and the PLC.

38.3.1 RS-232 cable

■ Connection diagram

RS232 connection diagram 1)

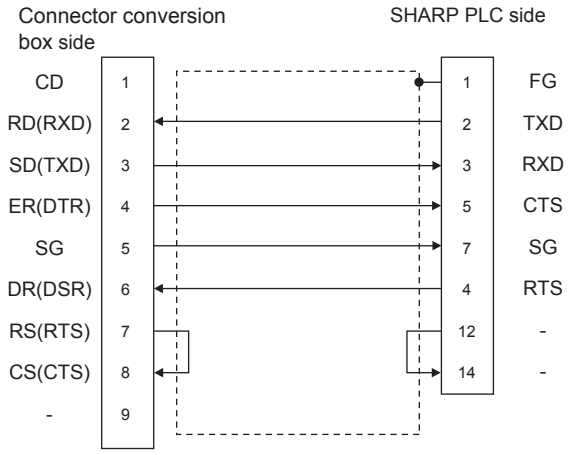

RS232 connection diagram 2)

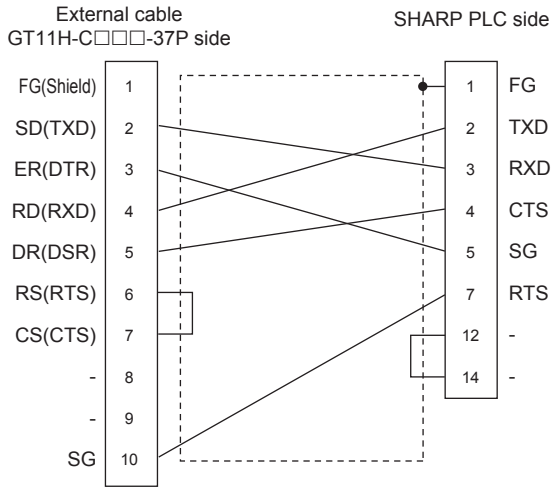

RS232 connection diagram 3)

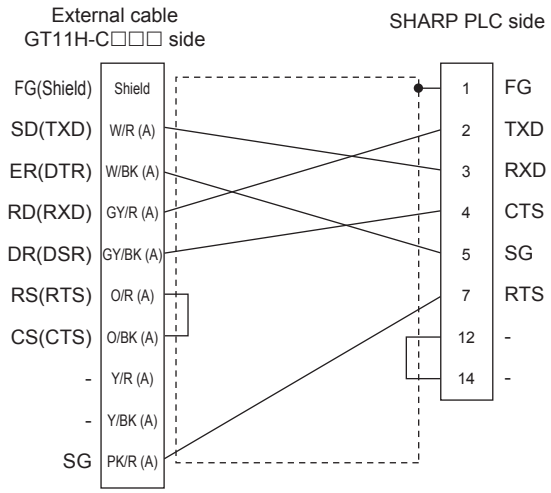

RS232 connection diagram 4)

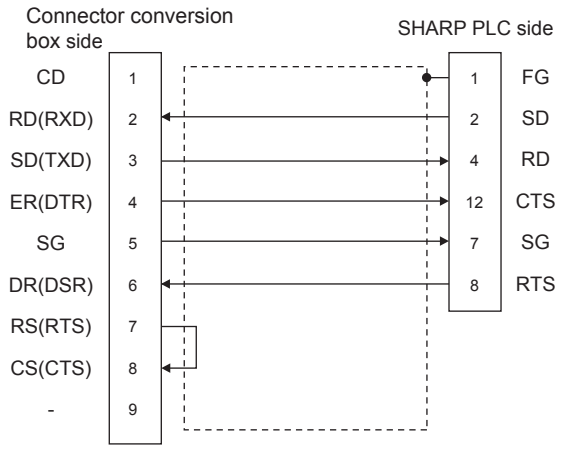

RS232 connection diagram 5)

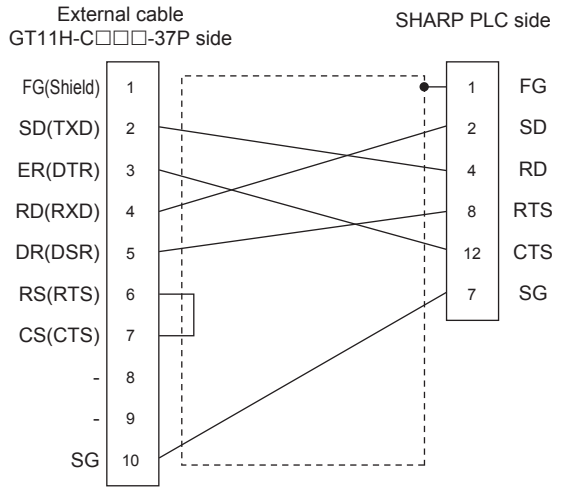

RS232 connection diagram 6)

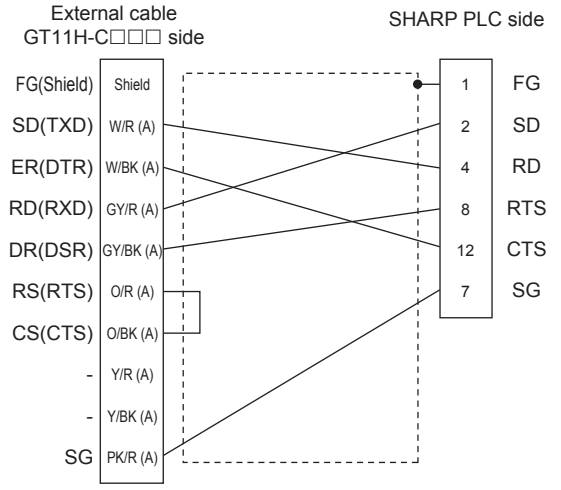

■ Precautions when preparing a cable

(1) Cable length
The total distance (between the GOT and a controller) of RS-232 cable must be 6m or less.

(2) Connector conversion box side connector
For the connector conversion box side connector, refer to the following.

☞ 6.6 Connector Conversion Box

(3) External cable side connector
For the connector specifications of the external cable side, refer to the following.

☞ 8.2 External Cable, Relay Cable

(4) SHARP PLC side connector
Use the connector compatible with the SHARP PLC side module.
For details, refer to the SHARP PLC user's manual.

38.3.2 RS-422 cable

■ Connection diagram

RS422 connection diagram 1)

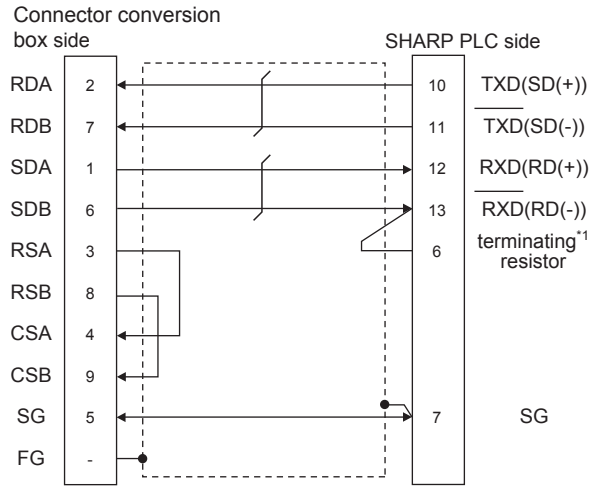

*1 Connect the terminating resistor at pin 6 with pin 13 (RXD) only at the terminal station.
(Valid for JW-70CUH and JW-100CUH. The terminating resistor does not exist in JW-22CU and JW-100CU.)

RS422 connection diagram 2)

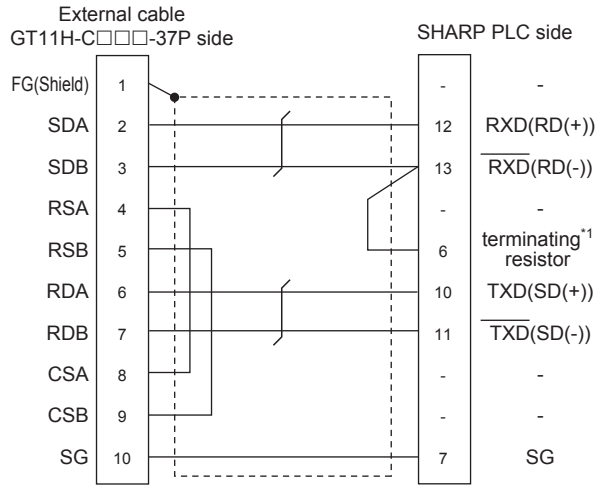

*1 Connect the terminating resistor at pin 6 with pin 13 (RXD) only at the terminal station.
(Valid for JW-70CUH and JW-100CUH. The terminating resistor does not exist in JW-22CU and JW-100CU.)

RS422 connection diagram 3)

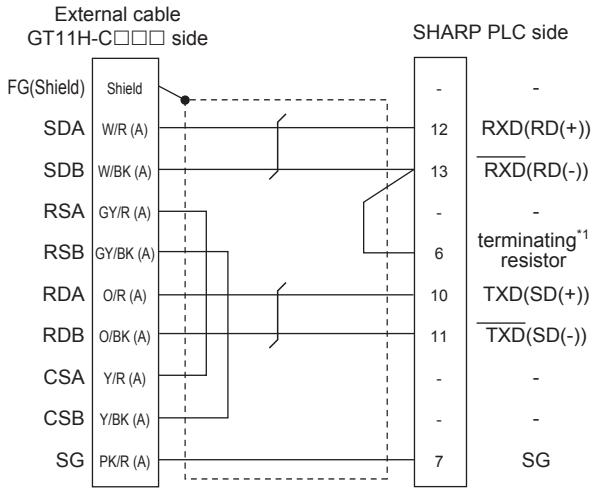

*1 Connect the terminating resistor at pin 6 with pin 13 (RXD) only at the terminal station.
(Valid for JW-70CUH and JW-100CUH. The terminating resistor does not exist in JW-22CU and JW-100CU.)

RS422 connection diagram 4)

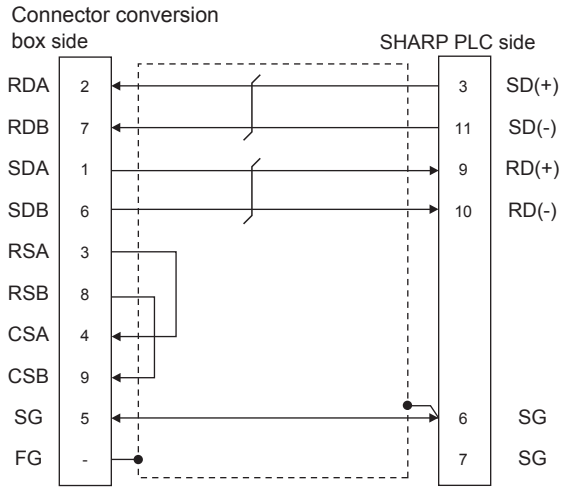

RS422 connection diagram 5)

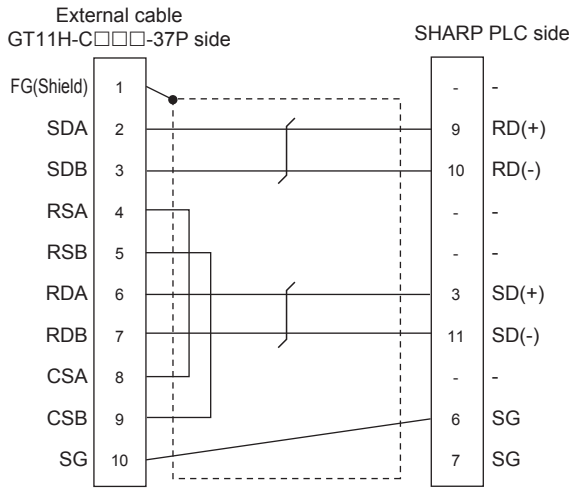

RS422 connection diagram 6)

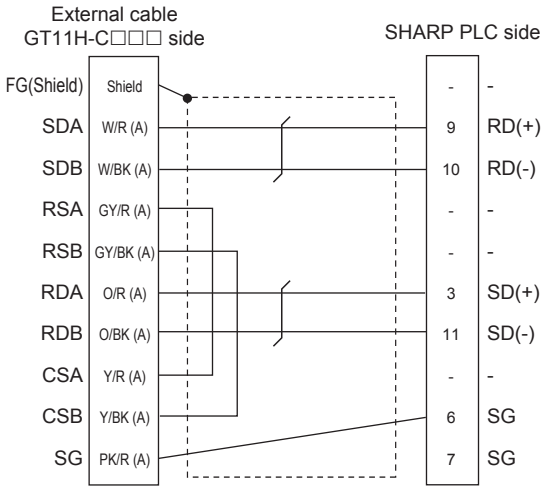

RS422 connection diagram 7)

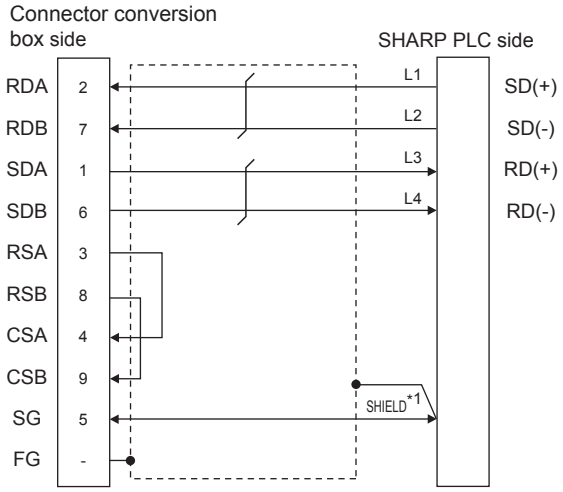

*1 Two SHIELD terminals are provided for JW-10CM and ZW-10CM. Connect to either SHIELD terminal.

RS422 connection diagram 8)

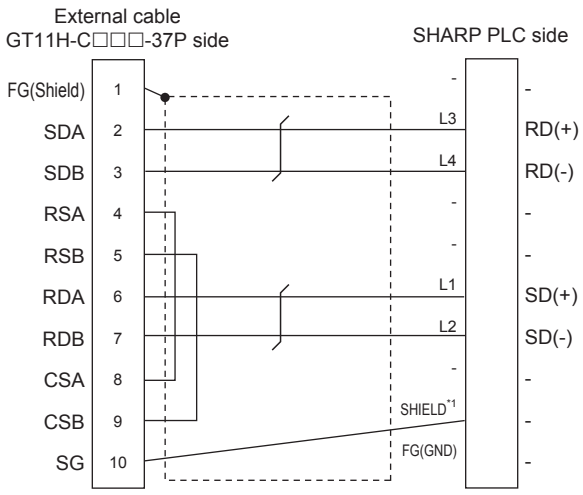

*1 Two SHIELD terminals are provided for JW-10CM and ZW-10CM. Connect to either SHIELD terminal.

RS422 connection diagram 9)

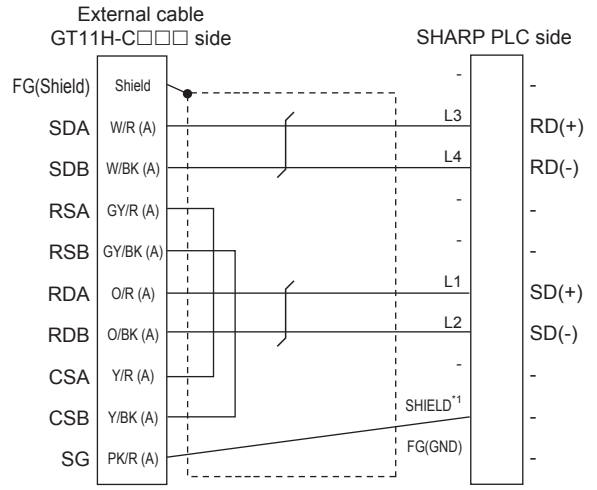

*1 Two SHIELD terminals are provided for JW-10CM and ZW-10CM. Connect to either SHIELD terminal.

■ Precautions when preparing a cable

(1) Cable length
The total distance (between GOT and controllers) of RS-422 cable must be 13m or less.

(2) Connector conversion box side connector
For the connector conversion box side connector, refer to the following.

☞ 6.6 Connector Conversion Box

(3) External cable side connector
For the connector specifications of the external cable side, refer to the following.

☞ 8.2 External Cable, Relay Cable

(4) SHARP PLC side connector
Use the connector compatible with the SHARP PLC side module.
For details, refer to the SHARP PLC user's manual.

■ Connecting terminating resistors

(1) SHARP PLC side
Connect the terminating resistor on the SHARP PLC side when connecting a GOT to a SHARP PLC.

The PLC CPUs and the modules on the PLC CPU side requiring a terminating resistor are shown below.

(a) JW-22CU

Turn "ON" the terminating resistor setting switch (SW1) on the back of JW-22CU to validate the terminating resistor.

(b) JW-70CUH and JW-100CUH

Connect the pin 6 (terminating resistor) of the communication port connection connector with the pin 13 (RXD) only at the terminal station to validate the terminating resistor.

(c) JW-21CM, JW-10CM and ZW-10CM

Turn "ON" the terminator switch (SW7) on the front panel only at the terminal station to validate the terminating resistor.

38.4 GOT Side Settings

38.4.1 Setting communication interface (Communication settings)

Set the channel of the equipment connected to the GOT.

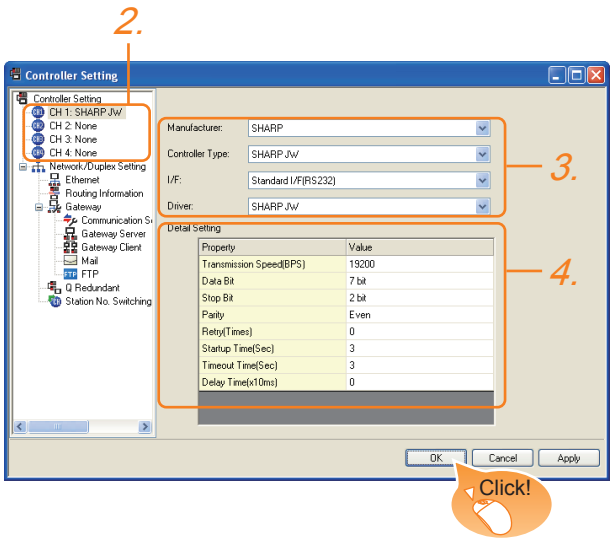

1. Select [Common] → [Controller Setting] from the menu.
2. The Controller Setting window is displayed. Select the channel to be used from the list menu.
3. Set the following items.
   - Manufacturer: SHARP
   - Controller Type: SHARP JW
   - I/F: Interface to be used
   - Driver: SHARP JW
4. The detailed setting is displayed after Manufacturer, Controller Type, I/F, and Driver are set.
   Make the settings according to the usage environment.
   38.4.2 Communication detail settings

Click the OK button when settings are completed.

POINT

The settings of connecting equipment can be confirmed in [I/F Communication Setting].
For details, refer to the following.
18.1.2 I/F communication setting

38.4.2 Communication detail settings

Make the settings according to the usage environment.

Item	Description	Range
Transmission Speed	Set this item when change the transmission speed used for communication with the connected equipment. (Default: 19200bps)	4800bps, 9600bps, 19200bps
Data Bit	Set this item when change the data length used for communication with the connected equipment. (Default: 7bit)	7bit (fixed)
Stop Bit	Specify the stop bit length for communications. (Default: 2bit)	2bit (fixed)
Parity	Specify whether or not to perform a parity check, and how it is performed during communication. (Default: Even)	Even (fixed)
Retry	Set the number of retries to be performed when a communication error occurs. (Default: 0time)	0 to 5times
Startup Time	Specify the time period from the GOT startup until GOT starts the communication with the PLC CPU. (Default: 3sec)	3 to 30sec
Timeout Time	Set the time period for a communication to time out. (Default: 3sec)	3 to 30sec
DelayTime*1	Set this item to adjust the transmission timing of the communication request from the GOT. (Default: 0ms)	0 to 300ms

*1 When connecting to the communication port, set "Delay Time" of the GOT side to 30ms or more.

POINT

(1) Communication interface setting by Utility
The communication interface setting can be changed on the Utility's [Communication setting] after writing [Communication Settings] of project data.
For details on the Utility, refer to the following manual.
11. COMMUNICATION INTERFACE SETTING (COMMUNICATION SETTING)

(2) Precedence in communication settings
When settings are made by GT Designer3 or the Utility, the latest setting is effective.

38.5 PLC Side Setting

POINT

SHARP PLC

For details of the SHARP PLC, refer to the following manual.

☞ SHARP PLC user's Manual

Model		Refer to
PLC CPU	JW-22CU	38.5.1
	JW-32CUH, JW-33CUH	38.5.2
	JW-70CUH, JW-100CUH, JW-100CU	38.5.1
	Z-512J	38.5.2
Link unit	JW-21CM	38.5.3
	JW-10CM, ZW-10CM	38.5.4

38.5.1 Connecting to JW-22CU, JW-70CUH, JW-100CUH or JW-100CU

■ System memory setting

Set the system memory.

System memory No.	Item	Set value
#236	Transmission speed, Parity, Stop bit	D7 D6 D5 D4 D3 D2 to D0 0 0 (3) (2) (1) (1) Transmission speed *1 *2 000: 19200bps 001: 9600bps 010: 4800bps (2) Parity 10 (fixed): Even (3) Stop bit 1 (fixed): 2 bits
#237	Station No.	1: Station No. 1 (fixed)

*1 Indicates only the transmission speeds that can be set on the GOT side.

*2 Specify the transmission speed to match the transmission speed of the GOT.

■ Terminating resistor setting switch (For JW-22CU only)

Set the terminating resistor setting switch.

(1) When using KV-L20R or KV-L20

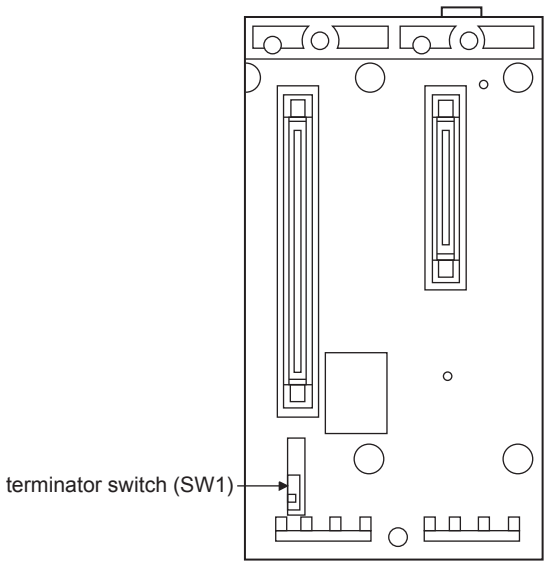

Settings	
For RS-232 communication	For RS-422 communication
OFF (no terminating resistor)	ON (terminating resistor attached)

38.5.2 Connecting to JW-32CUH, JW-33CUH or Z-512J

■ Settings for connecting to communication port 1 (PG/COMM1 port)

Set the system memory.

System memory No.	Item	Set value
#234	Transmission speed, Parity, Stop bit	D7 D6 D5 D4 D3 D2 to D0 0 0 (3) (2) (1) (1) Transmission speed *1 *2 000: 19200bps 001: 9600bps 010: 4800bps (2) Parity 10 (fixed): Even (3) Stop bit 1 (fixed): 2 bits
#235	Station No.	1: Station No. 1 (fixed)

*1 Indicates only the transmission speeds that can be set on the GOT side.
*2 Specify the transmission speed to match the transmission speed of the GOT.

■ Settings for connecting to communication port 2 (PG/COMM2 port)

Set the system memory.

System memory No.	Item	Set value
#236	Transmission speed, Parity, Stop bit	D7 D6 D5 D4 D3 D2 to D0 0 0 (3) (2) (1) (1) Transmission speed *1 *2 000: 19200bps 001: 9600bps 010: 4800bps (2) Parity 10 (fixed): Even (3) Stop bit 1 (fixed): 2 bits
#237	Station No.	1: Station No. 1 (fixed)

*1 Indicates only the transmission speeds that can be set on the GOT side.
*2 Specify the transmission speed to match the transmission speed of the GOT.

38.5.3 Connecting to the link unit (JW-21CM)

■ Switch setting of the link unit (JW-21CM)

Make setting for each switch.

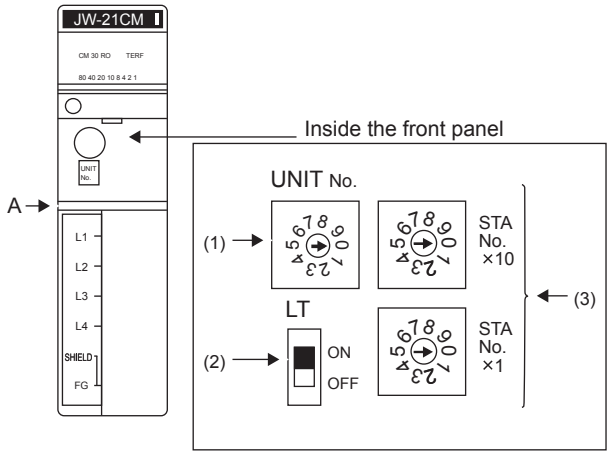

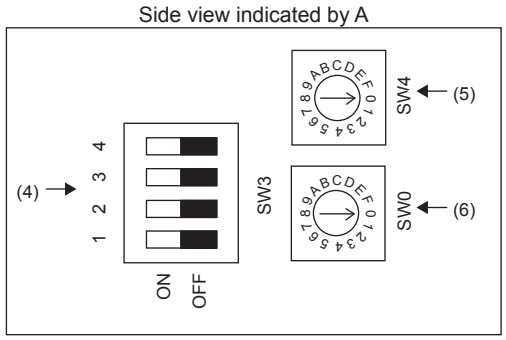

(1) Module No. switch (SW8)
The module No. switch is not used for communication with the GOT.

(2) Terminator switch (SW7)

Setting	Settings
ON*1	Terminating resistor validated

*1 Turn on the terminal station only.

(3) Station number setting switch (SW1, SW2)

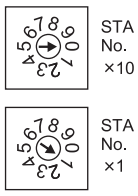

Switch No.	Setting	Contents of setting
SW1	Station No. lower digit (10^0 digits)	1 (fixed)
SW2	Station No. upper digit (10^1 digits)	0 (fixed)

(4) Operation mode setting switch (SW3)

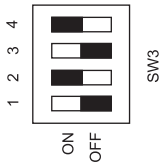

Switch No.	Setting	Contents of setting
SW3-1	OFF (fixed)	Invalid
SW3-2	ON (fixed)	4-wire type
SW3-3	OFF (fixed)	Invalid
SW3-4	ON (fixed)	Even

(5) Transmission speed setting switch (SW4)
Specify the transmission speed to match the transmission speed of the GOT.

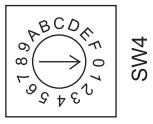

Setting*1	Contents of setting
0	19200bps
1	9600bps
2	4800bps

*1 Indicates only the transmission speeds that can be set on the GOT side.

(6) Function setting switch (SW0)

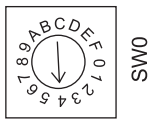

Setting	Settings
4 (fixed)	Computer link

38.5.4 Connecting to the link unit (JW-10CM or ZW-10CM)

■ Switch setting of link unit (JW-10CM and ZW-10CM)

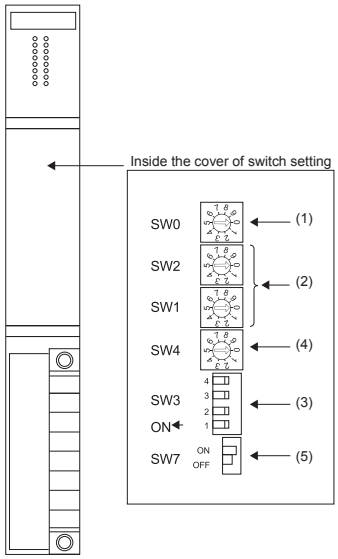

(1) Function setting switch (SW0)

Setting	Settings
4 (fixed)	Computer link (command mode)

(2) Station number switch (SW1, SW2)

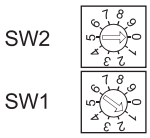

Switch No.	Setting	Settings
SW1	Station No. lower digit (10^0 digit)	1 (fixed)
SW2	Station No. upper digit (10^1 digits)	0 (fixed)

(3) Operation mode setting switch (SW3)

Switch No.	Setting	Contents of setting
SW3-1	OFF(fixed)	Invalid
SW3-2	ON (fixed)	4-wire type
SW3-3	OFF(fixed)	Invalid
SW3-4	ON (fixed)	Even

(4) Transmission speed setting switch (SW4)
Specify the transmission speed to match the transmission speed of the GOT.

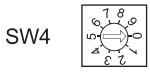

Setting*1	Contents of setting
0	19200bps
1	9600bps
2	4800bps

*1 Indicates only the transmission speeds that can be set on the GOT side.

(5) Terminator switch (SW7)

Setting	Contents of setting
ON*2	Terminating resistor validated

*2 Turn on the terminal station only.

38.6 Device Range that Can Be Set

For details on the device range of controllers that can be used on GT14 Handy, refer to the following manuals.

☞ GT Designer3 Version1 Screen Design Manual (Fundamentals)

☞ GOT1000 Series Connection Manual (Non-Mitsubishi Products 1) for GT Works3

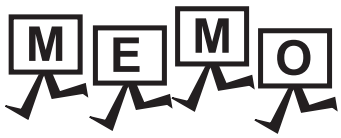
MEMO

39. CONNECTION TO SHINKO TECHNOS INDICATING CONTROLLER

39.1 Connectable Model List

The following table shows the connectable models.

Series	Model	Clock	Communication type	GT14 Handy	Refer to
ACS-13A Series	ACS-13A□/□, □, C5*2	×	RS-232	○	39.2.1
JC Series	JCS-33A-□/□□, C5*2	×	RS-232	○	39.2.1
	JCR-33A-□/□□, C5*2				
	JCD-33A-□/□□, C5*2				
JCM-33A Series	JCM-33A□/□, □C5*2	×	RS-232	○	39.2.1
JIR-301-M Series	JIR-301-M□, C5*2	×	RS-232	○	39.2.1
PCD-300 Series	PCD-33A-□/M, C5*2	×	RS-232	○	39.2.1
PC-900 Series	PC935-□/M, C5*2	×	RS-232	○	39.2.1
	PC955-□/M, C5*2				
	PC935-□/M, C*1	×	RS-232	○	39.2.2
	PC955-□/M, C*1				
FCD-100 Series*1	FCD-13A-□/M, C	×	RS-232	○	39.2.2
	FCD-15A-□/M, C				
FCR-100 Series*1	FCR-13A-□/M, C	×	RS-232	○	39.2.2
	FCR-15A-□/M, C				
FCR-23A Series*1	FCR-23A-□/M, C	×	RS-232	○	39.2.2
FIR Series*1	FIR-201-M, C	×	RS-232	○	39.2.2
DCL-33A Series	DCL-33A-□/M, □, C5*2	×	RS-232	○	39.2.3

*1 Only the indicating controller equipped with RS-232 communication function can be connected.

*2 indicating controller of the following version or later can be connected.

Series	Model	Version
ACS-13A Series	ACS-13A□/□, □, C5	Products manufactured in October 2007 or later (Indicating controllers with the serial numbers 07Axxxxxx, 07Kxxxxxx, and 07Xxxxxxx or later) (The first two digits of the serial numbers show the last two digits of the year.)
JC Series	JCS-33A-□/□□, C5	
	JCR-33A-□/□□, C5	
	JCD-33A-□/□□, C5	
JCM-33A Series	JCM-33A□/□, □C5	
JIR-301-M Series	JIR-301-M□, C5	
PCD-300 Series	PCD-33A-□/M, C5	
PC-900 Series	PC935-□/M, C5	
	PC955-□/M, C5	
DCL-33A Series	DCL-33A-□/M, □, C5	

39.2 System Configuration

39.2.1 Connecting to ACS-13A, JC, JCM-33A, JIR-301-M, PCD-300 Series, PC-900 Series (PC-955-□/M, C5, PC-935-□/M, C5)

Communication driver

Shinko Technos Controller

(1) When using the connector conversion box

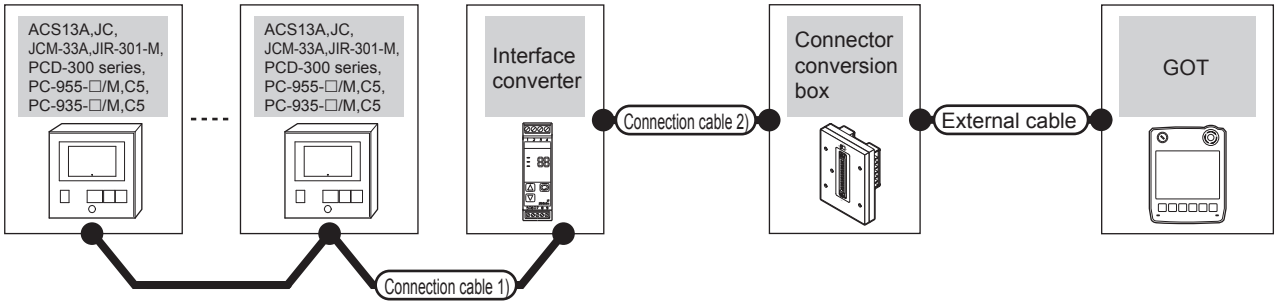

Indicating controller		Connection cable 1)		Interface converter *1	Connection cable 2)	Connector conversion box	External cable	GOT model	Total distance *2	Number of connectable equipment
Model	Communication type	Cable model Connection diagram number	Max. distance		Cable model Connection diagram number					
ACS13A JC JCM-33A JIR-301-M PCD-300 Series PC-955-□/M, C5 PC-935-□/M, C5	RS-232	User preparing RS485 connection diagram 1)	1200m	IF-400	RS-232C CFP-C2 *1	GT11H-CNB-37S	GT11H-C30-37P (3m)	GT14 Handy	6m	31 indicating controllers for 1 GOT

*1 Product manufactured by Shinko Technos Co., Ltd. For details of the product, contact Shinko Technos Co., Ltd.

*2 The distance from the GOT to the interface converter (Connection cable 2) + External cable)

(2) When using the external cable (GT11H-C□□□-37P)

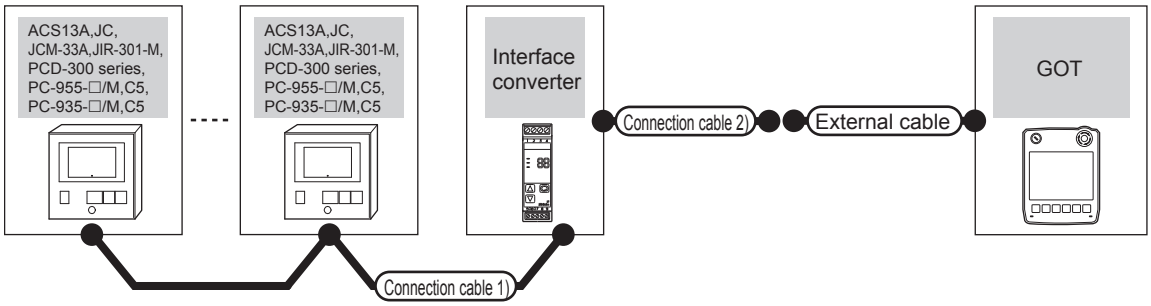

Indicating controller		Connection cable 1)		Interface converter *1	Connection cable 2)	External cable	GOT model	Total distance *2	Number of connectable equipment
Model	Communication type	Cable model Connection diagram number	Max. distance		Cable model Connection diagram number				
ACS13A JC JCM-33A JIR-301-M PCD-300 Series PC-955-□/M, C5 PC-935-□/M, C5	RS-232	User preparing RS485 connection diagram 1)	1200m	IF-400	User preparing RS232 connection diagram 2)	GT11H-C30-37P(3m)	GT14 Handy	6m	31 indicating controllers for 1 GOT

*1 Product manufactured by Shinko Technos Co., Ltd. For details of the product, contact Shinko Technos Co., Ltd.

*2 The distance from the GOT to the interface converter (Connection cable 2) + External cable)

(3) When using the external cable (GT11H-C□□□)

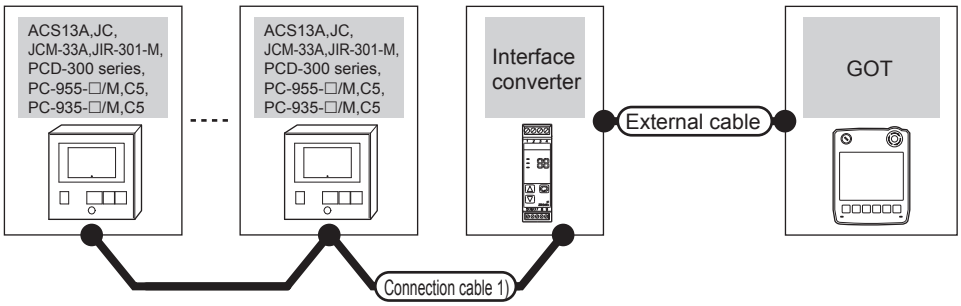

Indicating controller		Connection cable 1)		Interface converter *1	External cable	GOT model	Total distance *2	Number of connectable equipment
Model	Communication type	Cable model Connection diagram number	Max. distance					
ACS13A JC JCM-33A JIR-301-M PCD-300 Series PC-955-□/M, C5 PC-935-□/M, C5	RS-232	User preparing RS485 connection diagram 1)	1200m	IF-400	GT11H-C30(3m) GT11H-C60(6m) User preparing RS232 connection diagram 3)	GT14 Handy	6m	31 indicating controllers for 1 GOT

*1 Product manufactured by Shinko Technos Co., Ltd. For details of the product, contact Shinko Technos Co., Ltd.

*2 The distance from the GOT to the interface converter (Connection cable 2) + External cable)

39.2.2 Connecting to FCD-100, FCR-100, FCR-23A, FIR Series, PC-900 Series (PC-955□/M, C, PC-935-□/M, C)

(1) When using the connector conversion box

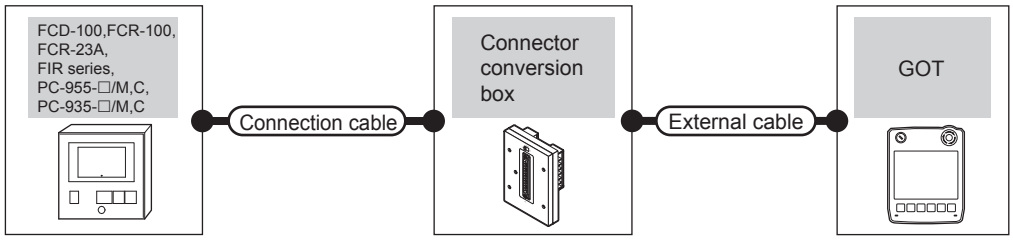

Indicating controller*1		Connection cable	Connector conversion box	External cable	GOT model	Total distance	Number of connectable equipment
Model	Communication type	Cable model Connection diagram number					
FCD-100 FCR-100 FCR-23A FIR Series PC-955-□/M, C PC-935-□/M, C	RS-232	GT09-C30R21401-4T(3m) or User preparing RS232 connection diagram 1)	GT11H-CNB-37S	GT11H-C30-37P(3m)	GT14 Handy	6m	1 indicating controller for 1 GOT

*1 Only the indicating controller equipped with RS-232 communication function can be connected.

(2) When using the external cable (GT11H-C□□□-37P)

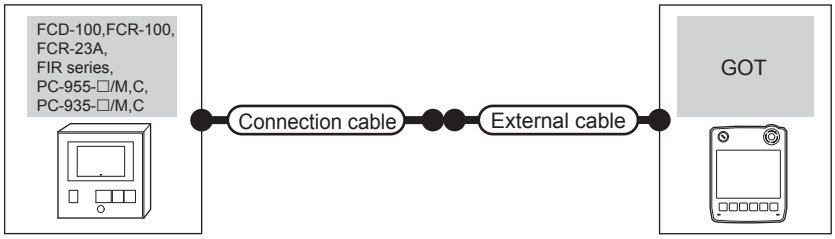

Indicating controller*1		Connection cable	External cable	GOT model	Total distance	Number of connectable equipment
Model	Communication type	Cable model Connection diagram number				
FCD-100 FCR-100 FCR-23A FIR Series PC-955-□/M, C PC-935-□/M, C	RS-232	User preparing RS232 connection diagram 2)	GT11H-C30-37P(3m)	GT14 Handy	6m	1 indicating controller for 1 GOT

*1 Only the indicating controller equipped with RS-232 communication function can be connected.

(3) When using the external cable (GT11H-C□□□)

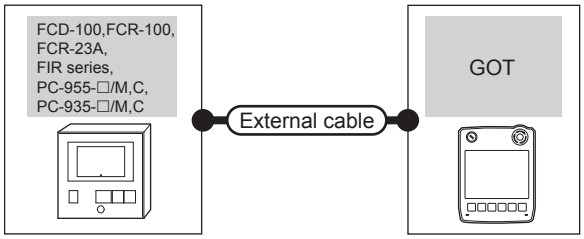

Indicating controller*1		External cable	GOT model	Total distance	Number of connectable equipment
Model	Communication type				
FCD-100 FCR-100 FCR-23A FIR Series PC-955-□/M, C PC-935-□/M,C	RS-232	GT11H-C30(3m) GT11H-C60(6m) User preparing RS232 connection diagram 3)	GT14 Handy	6m	1 indicating controller for 1 GOT

*1 Only the indicating controller equipped with RS-232 communication function can be connected.

39.2.3 Connecting to DCL-33A Series

Communication driver

Shinko Technos Controller

(1) When using the connector conversion box

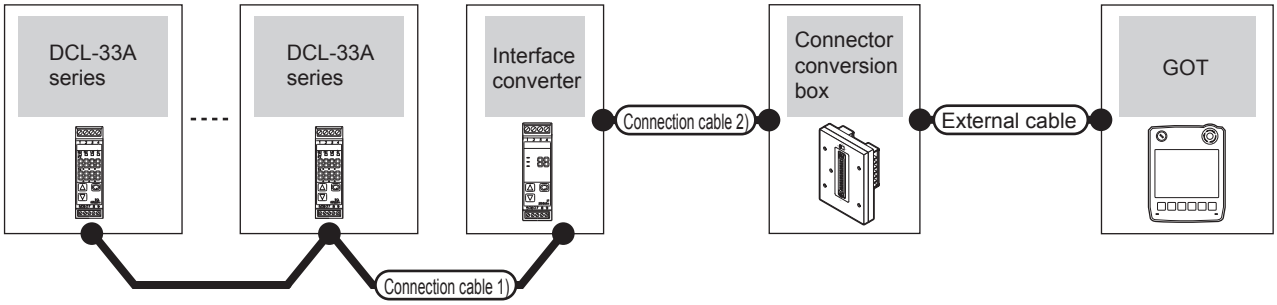

Indicating controller		Connection cable 1)		Interface converter *1	Connection cable 2)	Connector conversion box	External cable	GOT model	Total distance *2	Number of connectable equipment
Model	Communication type	Cable model Connection diagram number	Max. distance		Cable model Connection diagram number					
DCL-33A Series	RS-232	RS485-CPP *1	1200m	IF-400	RS-232CCFP-C2 *1	GT11H-CNB-37S	GT11H-C30-37P (3m)	GT14 Handy	6m	31 indicating controllers for 1 GOT

*1 Product manufactured by Shinko Technos Co., Ltd. For details of the product, contact Shinko Technos Co., Ltd.

*2 The distance from the GOT to the interface converter (Connection cable 2) + External cable)

(2) When using the external cable (GT11H-C□□□-37P)

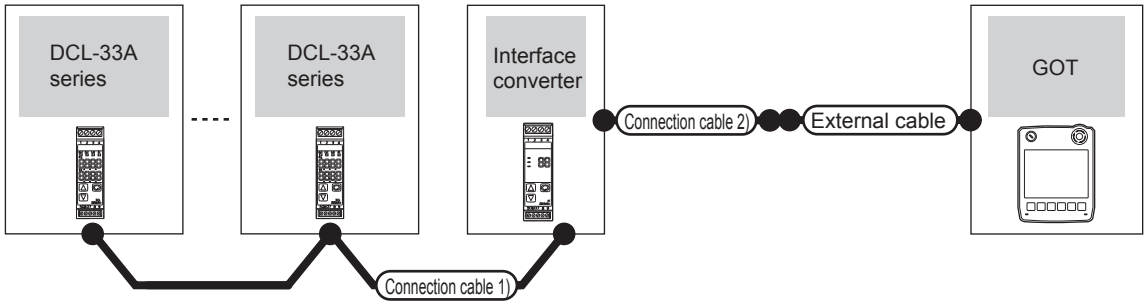

Indicating controller		Connection cable 1)		Interface converter *1	Connection cable 2)	External cable	GOT model	Total distance *2	Number of connectable equipment
Model	Communication type	Cable model Connection diagram number	Max. distance		Cable model Connection diagram number				
DCL-33A Series	RS-232	RS485-CPP*1	1200m	IF-400	RS232 connection diagram 2)	GT11H-C30-37P (3m)	GT14 Handy	6m	31 indicating controllers for 1 GOT

*1 Product manufactured by Shinko Technos Co., Ltd. For details of the product, contact Shinko Technos Co., Ltd.

*2 The distance from the GOT to the interface converter (Connection cable 2) + External cable)

(3) When using the external cable (GT11H-C□□□)

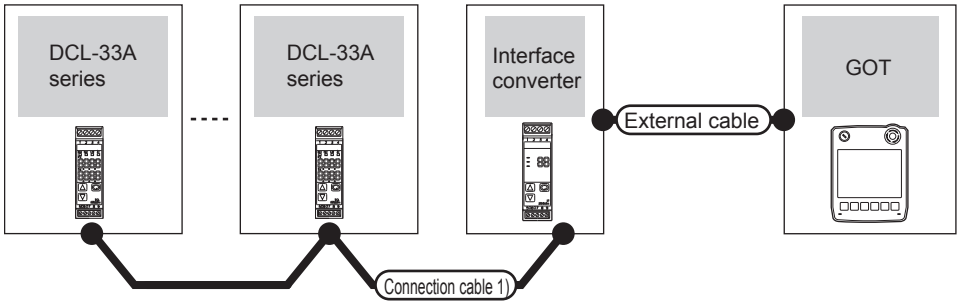

Indicating controller		Connection cable 1)		Interface converter *1	External cable	GOT model	Total distance *2	Number of connectable equipment
Model	Communication type	Cable model Connection diagram number	Max. distance					
DCL-33A Series	RS-232	RS485-CPP*1	1200m	IF-400	GT11H-C30(3m) GT11H-C60(6m) (User preparing) RS232 connection diagram 3)	GT14 Handy	6m	31 indicating controllers for 1 GOT

*1 Product manufactured by Shinko Technos Co., Ltd. For details of the product, contact Shinko Technos Co., Ltd.

*2 The distance from the GOT to the interface converter (Connection cable 2) + External cable)

39.3 Connection Diagram

The following diagram shows the connection between the GOT and the PLC.

39.3.1 RS-232 cable

■ Connection diagram

RS232 connection diagram 1)

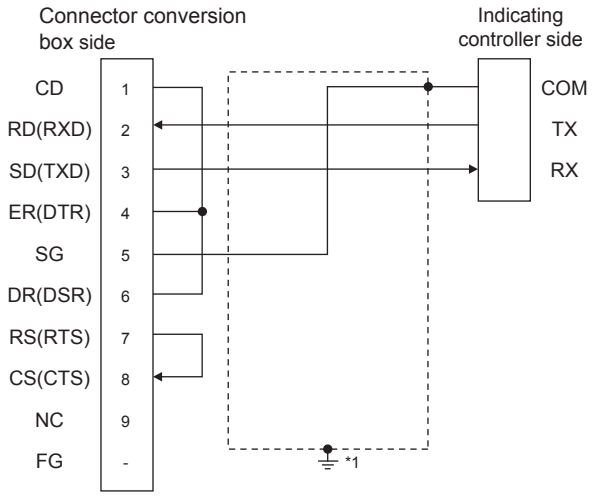

*1 Connect FG grounding to the appropriate part of a cable shield line.

RS232 connection diagram 2)

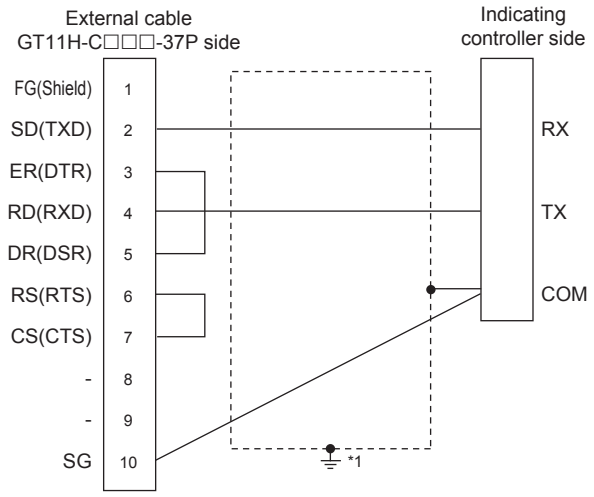

*1 Connect FG grounding to the appropriate part of a cable shield line.

RS232 connection diagram 3)

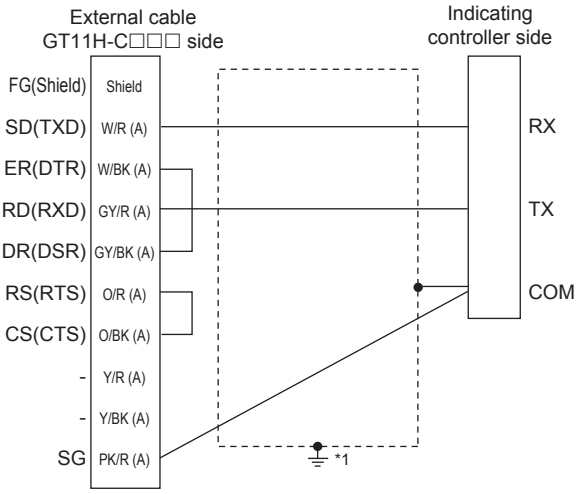

*1 Connect FG grounding to the appropriate part of a cable shield line.

■ Precautions when preparing a cable

(1) Cable length
The total distance (between the GOT and a controller) of RS-232 cable must be 6m or less.

(2) Connector conversion box side connector
For the connector conversion box side connector, refer to the following.
☞ 6.6 Connector Conversion Box

(3) External cable side connector
For the connector specifications of the external cable side, refer to the following.
☞ 8.2 External Cable, Relay Cable

(4) Shinko Technos indicating controller controller side connector
Use the connector compatible with the Shinko Technos indicating controller controller side.
For details, refer to the user's manual of the Shinko Technos indicating controller controller.

39.3.2 RS-485 cable

■ Connection diagram

RS485 connection diagram 1)

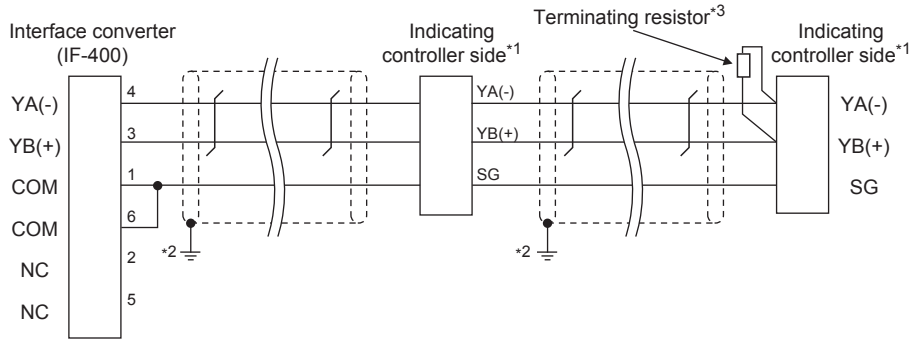

*1 Pin No. of communication converter differs depending on the model.
Refer to the following table.

*2 Connect FG grounding to the appropriate part of a cable shield line.

*3 For details of the terminating resistor specifications, refer to the following manual.

☞ User's Manual of the Shinko Technos indicating controller

Signal name	Model of indicating controller								
	JCS-33A	JCR-33A	JCD-33A	JCM-33A	JIR-301-M	ACS-13A	PCD-33A	PC-955	PC-935
	Pin No.	Pin No.	Pin No.	Pin No.	Pin No.	Pin No.	Pin No.	Pin No.	Pin No.
YA(-)	13	11	11	10	11	16	11	11	11
YB(+)	14	14	14	13	14	17	14	12	12
SG	15	17	17	14	17	18	17	16	16

■ Precautions when preparing a cable

(1) Cable length
The length of the RS-485 cable must be 1200m or less.

(2) Shinko Technos indicating controller controller side connector
Use the connector compatible with the Shinko Technos indicating controller controller side.
For details, refer to the user's manual of the Shinko Technos indicating controller controller.

■ Connecting terminating resistors

(1) Shinko Technos indicating controller side
A terminating resistor must be connected to the Shinko Technos indicating controller.

☞ User's Manual of the Shinko Technos indicating controller

39.4 GOT Side Settings

39.4.1 Setting communication interface (Communication settings)

Set the channel of the equipment connected to the GOT.

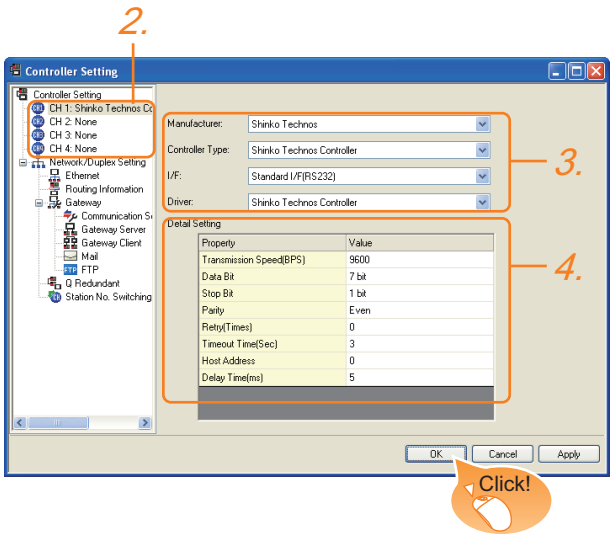

1. Select [Common] → [Controller Setting] from the menu.
2. The Controller Setting window is displayed. Select the channel to be used from the list menu.
3. Set the following items.
   - Manufacturer: Shinko Technos
   - Controller Type: Shinko Technos Controller
   - I/F: Interface to be used
   - Driver: Shinko Technos Controller
4. The detailed setting is displayed after Manufacturer, Controller Type, I/F, and Driver are set.
   Make the settings according to the usage environment.
   ☞ 39.4.2 Communication detail settings

Click the OK button when settings are completed.

POINT

The settings of connecting equipment can be confirmed in [I/F Communication Setting].
For details, refer to the following.
☞ 18.1.2 I/F communication setting

39.4.2 Communication detail settings

Make the settings according to the usage environment.

Item	Description	Range
Transmission Speed	Set this item when change the transmission speed used for communication with the connected equipment. (Default: 9600bps)	9600bps, 19200bps, 38400bps, 57600bps, 115200bps
Data Bit	Set this item when change the data length used for communication with the connected equipment. (Default: 7bit)	7bit/8bit
Stop Bit	Specify the stop bit length for communications. (Default: 1bit)	1bit/2bits
Parity	Specify whether or not to perform a parity check, and how it is performed during communication. (Default: Even)	None Even Odd
Retry	Set the number of retries to be performed when a communication error occurs. (Default: 0time)	0 to 5times
Timeout Time	Set the time period for a communication to time out. (Default: 3sec)	3 to 30sec
Host Address	Specify the host address (station No. of the GOT to which the indicating controller is connected) in the connected network. (Default: 0)	0 to 94
Delay Time	Set this item to adjust the transmission timing of the communication request from the GOT. (Default: 5ms)	0 to 300ms

POINT

(1) Communication interface setting by Utility
The communication interface setting can be changed on the Utility's [Communication setting] after writing [Communication Settings] of project data.
For details on the Utility, refer to the following manual.
☞ 11. COMMUNICATION INTERFACE SETTING (COMMUNICATION SETTING)

(2) Precedence in communication settings
When settings are made by GT Designer3 or the Utility, the latest setting is effective.

39.5 Indicating Controller Side Setting

POINT

(1) Shinko Technos indicating controller
For details of Shinko Technos indicating controller, refer to the following manual.

☞ User's Manual of the Shinko Technos indicating controller

(2) Interface converter
For details on communication settings of the RS232C/RS485 converter, refer to the following manual.

☞ User's Manual of RS232C/RS485 converter

Model		Refer to
Indicating controller	ACS-13A, DCL-33A, JC, JCM-33A, JIR-301-M, PCD-300 Series, PC-900 Series (PC-955-☐/M, C5, PC-935-☐/M, C5)	39.5.1
	FCD-100, FCR-100, FCR-23A, FIR Series, PC-900 Series (PC-955-☐/M, C, PC-935-☐/M, C)	39.5.2
Communication controller	IF-400	39.5.3

39.5.1 Connecting to ACS-13A, DCL-33A, JC, JCM-33A, JIR-301-M, PCD-300 Series, PC-900 Series (PC-955-☐/M, C5, PC-935-☐/M, C5)

■ Communication settings

Make the communication settings by operating the key of the indicating controller.

Item	Set value
Transmission speed*1	9600bps, 19200bps
Data Bit	7bits (Fixed)
Parity bit	Even (fixed)
Stop Bit	1bit (Fixed)
Station No.*2*3	0 to 95
Communication protocol	Shinko protocol

*1 Adjust the settings with GOT settings.
*2 Avoid duplication of the station No. with any of the other units.
*3 When setting the "95" to the station No., the read-out of data cannot be performed.

39.5.2 Connecting to FCD-100, FCR-100, FCR-23A, FIR Series, PC-900 Series (PC-955-☐/M, C, PC-935-☐/M, C)

■ Communication settings

Make the communication settings by operating the key of the indicating controller.

Item	Set value
Transmission speed*1	9600bps, 19200bps
Data Bit	7bits (Fixed)
Parity bit	Even (fixed)
Stop Bit	1bit (Fixed)
Station No.*1*2	0 to 95
Communication protocol	Shinko protocol

*1 Adjust the settings with GOT settings.
*2 When setting the "95" to the station No., the read-out of data cannot be performed.

39.5.3 Connecting to communication converter (IF-400)

■ Communication settings

Make the communication settings using a setting switch.

Item	Set value
Transmission speed*1	9600bps, 19200bps
Sending/Receiving switching period*2	1 character, 2 character

*1 Adjust the settings with GOT and the indicating controller settings.
*2 The setting of 1 character is recommended.

39.5.4 Station number setting

Set each station number so that no station number overlaps.

The station number can be set without regard to the cable connection order. There is no problem even if station numbers are not consecutive.

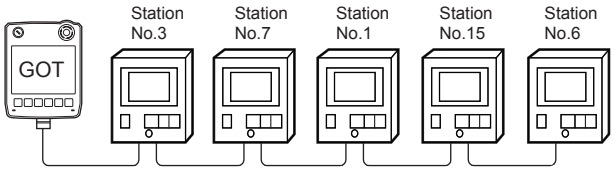

Examples of station number setting

(1) Direct specification

When setting the device, specify the station number of the indicating controller of which data is to be changed.

Specification range
0 to 94

(2) Indirect specification

When setting the device, indirectly specify the station number of the inverter of which data is to be changed using the 16-bit GOT internal data register (GD10 to GD25).

When specifying the station No. from 100 to 115 on GT Designer3, the value of GD10 to GD25 compatible to the station No. specification will be the station No. of the indicating controller.

Specification station No.	Compatible device	Setting range
100	GD10	0 to 94 For the setting other than the above, an error (dedicated device is out of range) will occur.
101	GD11	
102	GD12	
103	GD13	
104	GD14	
105	GD15	
106	GD16	
107	GD17	
108	GD18	
109	GD19	
110	GD20	
111	GD21	
112	GD22	
113	GD23	
114	GD24	
115	GD25	

(3) All station specification

Target station differs depending on write-in operation or read-out operation.

- For write-in operation, all station will be a target.
  In the WORD BIT write-in operation, only the indicating controller whose station No. is the same as host address is applicable. For details of host address setting, refer to the following.
  39.4.1 Setting communication interface (Communication settings)
- In the read-out operation, only the indicating controller whose station No. is the same as host address is applicable.
  For details of host address setting, refer to the following.
  39.4.1 Setting communication interface (Communication settings)

39.6 Device Range that Can Be Set

For details on the device range of controllers that can be used on GT14 Handy, refer to the following manuals.

☞ GT Designer3 Version1 Screen Design Manual (Fundamentals)

☞ GOT1000 Series Connection Manual (Non-Mitsubishi Products 1) for GT Works3

39.7 Precautions

■ Station number settings of indicating controller

In the system configuration, the indicating controller with the station number set with the host address must be included.

For details of host address setting, refer to the following.

☞ 39.4.1 Setting communication interface (Communication settings)

■ GOT clock control

Since the indicating controller does not have a clock function, the settings of [time adjusting] or [time broad cast] by GOT clock control will be disabled.

■ When using the communication converter IF-400

When using the communication converter IF-400, some communication error may occur. Set the number of retries to more than one time.

■ Cutting the portion of multiple connection of the controller

By setting GOT internal device, GOT can cut the portion of multiple connection of the controller. For example, faulty station that has communication timeout can be cut from the system.

For details of the setting contents of GOT internal device, refer to the following manual.

☞ GT Designer3 Version1 Screen Design Manual

40. CONNECTION TO CHINO CONTROLLER

40.1 Connectable Model List

The following table shows the connectable models.

Series	Model	Clock	Communication type	GT14 Handy	Refer to
LT230 Series	LT230	×	RS-232	○	40.2.1
LT300 Series	LT350	×	RS-232 RS-422	○	40.2.1
	LT370				
LT400 Series	LT450	×	RS-232 RS-422	○	40.2.1
	LT470				
LT830 Series	LT830	×	RS-232	○	40.2.1
DZ1000 Series	DZ1000	×	RS-232 RS-422	○	40.2.1
DZ2000 Series	DZ2000	×	RS-232 RS-422	○	40.2.1
DB1000 Series	DB1000	×	RS-232 RS-422	○	40.2.1
DB2000 Series	DB2000	×	RS-232 RS-422	○	40.2.1
KP Series	KP1000	×	RS-232 RS-422	○	40.2.2
	KP2000				
AL3000 Series	AL3000	×	RS-232 RS-422	○	40.2.2
AH3000 Series	AH3000	×	RS-232 RS-422	○	40.2.2
KE Series	KE3000	×	RS-232 RS-422	○	40.2.2
SE3000 Series	SE3000	×	RS-232 RS-422	○	40.2.2
LE5000 Series	LE5100	×	RS-232 RS-422	○	40.2.2
	LE5200				
	LE5300				
JU Series	JU	×	RS-232 RS-422	○	40.2.2
GT120 Series	GT120	×	RS-232	○	40.2.3

40.2 System Configuration

40.2.1 Connecting to LT230, LT300, LT400, LT830, DZ1000, DZ2000, DB1000, DB2000 Series

■ When connecting to controllers

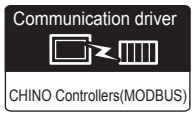

(1) When using the connector conversion box

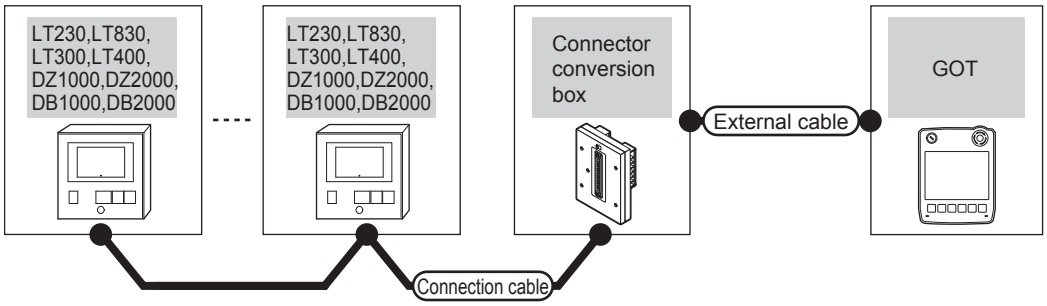

Indicating controller		Connection cable	Connector conversion box	External cable	GOT model	Total distance	Number of connectable equipment
Model	Communication type	Cable model Connection diagram number					
LT300, LT400 DZ1000, DZ2000 DB1000, DB2000	RS-232	User preparing RS232 connection diagram 1)	GT11H-CNB-37S	GT11H-C30-37P(3m)	GT14 Handy	6m	1 controller for 1 GOT
	RS-422	User preparing RS422 connection diagram 2)	GT11H-CNB-37S	GT11H-C30-37P(3m) GT11H-C60-37P(6m) GT11H-C100-37P(10m)	GT14 Handy	13m	10 controllers for 1 GOT

(2) When using the external cable (GT11H-C□□□-37P)

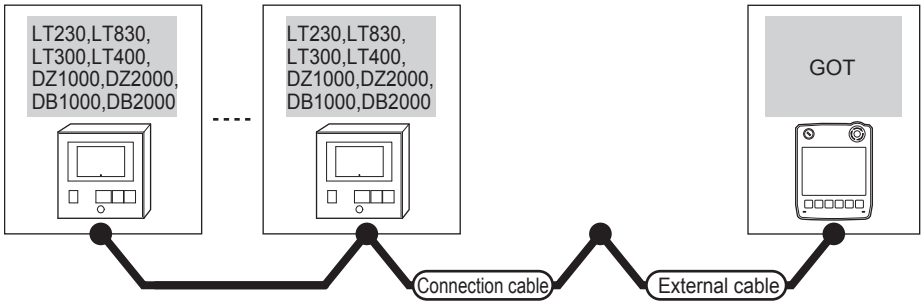

Indicating controller		Connection cable	External cable	GOT model	Total distance	Number of connectable equipment
Model	Communication type	Cable model Connection diagram number				
LT300, LT400 DZ1000, DZ2000 DB1000, DB2000	RS-232	User preparing RS232 connection diagram 2)	GT11H-C30-37P(3m)	GT14 Handy	6m	1 controller for 1 GOT
	RS-422	User preparing RS422 connection diagram 3)	GT11H-C30-37P(3m) GT11H-C60-37P(6m) GT11H-C100-37P(10m)	GT14 Handy	13m	10 controllers for 1 GOT

(3) When using the external cable (GT11H-C□□□)

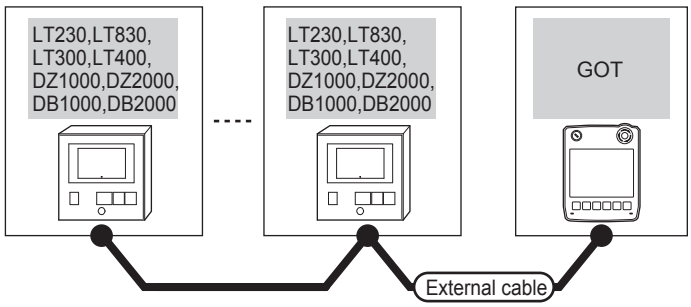

Indicating controller		External cable	GOT model	Total distance	Number of connectable equipment
Model	Communication type				
LT300, LT400 DZ1000, DZ2000 DB1000, DB2000	RS-232	GT11H-C30(3m) GT11H-C60(6m) User preparing RS232 connection diagram 3)	GT14 Handy	6m	1 controller for 1 GOT
	RS-422	GT11H-C30(3m) GT11H-C60(6m) GT11H-C100(10m) User preparing RS422 connection diagram 4)	GT14 Handy	13m	10 controllers for 1 GOT

■ When connecting to converter

(1) When using the connector conversion box

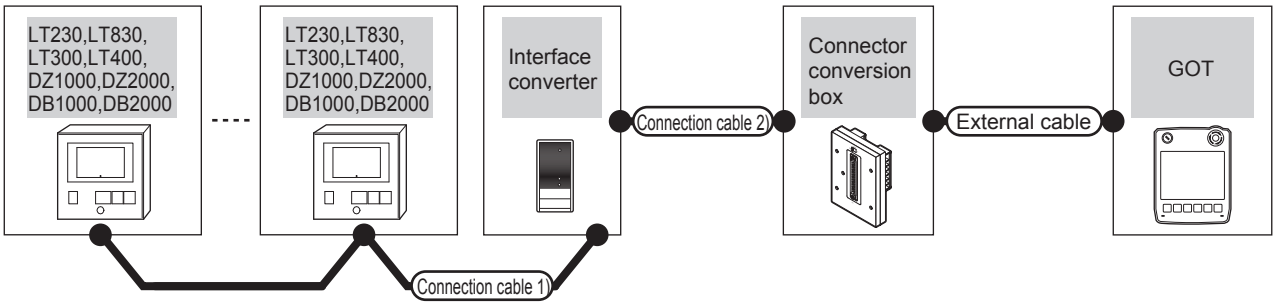

Indicating controller	Connection cable 1)		Interface converter*1		Connection cable 2)	Connector conversion box	External cable	GOT model	Total distance *2	Number of connectable equipment
Model	Cable model Connection diagram number	Max. distance	Model	Communication type	Cable model Connection diagram number					
LT300, LT400 DZ1000 DZ2000 DB1000 DB2000	User preparing RS422 connection diagram 1)	1200m	SC8-10	RS-232	User preparing RS232 connection diagram 1)	GT11H-CNB-37S	GT11H-C30-37P (3m)	GT14 Handy	6m	31 controllers for 1 GOT
LT230, LT300 LT400, LT830 DZ1000 DZ2000 DB1000 DB2000	User preparing RS485 connection diagram 1)	1200m	SC8-10	RS-232	User preparing RS232 connection diagram 1)			GT14 Handy	6m	

*1 Product manufactured by CHINO CORPORATION. For details of the product, contact CHINO corporation.
*2 The distance from the GOT to the interface converter (Connection cable 2) + External cable)

(2) When using the external cable (GT11H-C□□□-37P)

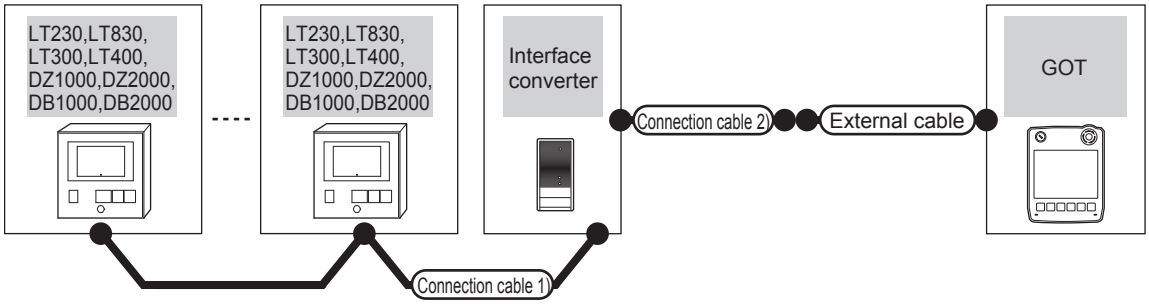

Indicating controller	Connection cable 1)		Interface converter*1		Connection cable 2)	External cable	GOT model	Total distance *2	Number of connectable equipment
Model	Cable model Connection diagram number	Max. distance	Model	Communication type	Cable model Connection diagram number				
LT300, LT400 DZ1000 DZ2000 DB1000 DB2000	User preparing RS422 connection diagram 1)	1200m	SC8-10	RS-232	User preparing RS232 connection diagram 2)	GT11H-C30-37P (3m)	GT14 Handy	6m	31 controllers for 1 GOT
LT230, LT300 LT400, LT830 DZ1000 DZ2000 DB1000 DB2000	User preparing RS485 connection diagram 1)	1200m	SC8-10	RS-232	User preparing RS232 connection diagram 2)	GT11H-C30-37P (3m)	GT14 Handy	6m	

*1 Product manufactured by CHINO CORPORATION. For details of the product, contact CHINO corporation.
*2 The distance from the GOT to the interface converter (Connection cable 2) + External cable)

(3) When using the external cable (GT11H-C□□□)

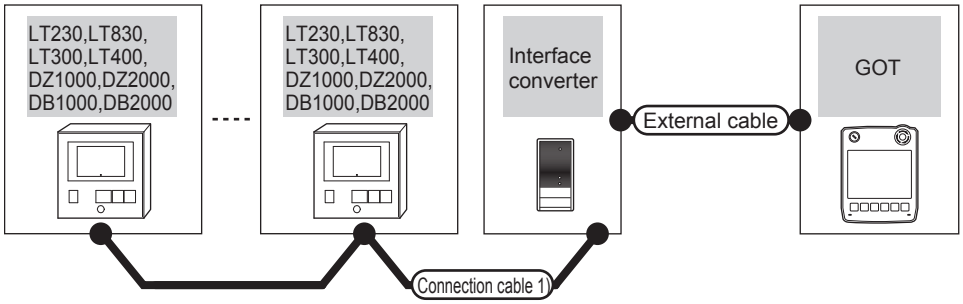

Indicating controller	Connection cable 1)		Interface converter*1		External cable	GOT model	Total distance *2	Number of connectable equipment
Model	Cable model Connection diagram number	Max. distance	Model	Communication type				
LT300, LT400 DZ1000 DZ2000 DB1000 DB2000	User preparing RS422 connection diagram 1)	1200m	SC8-10	RS-232	GT11H-C30(3m) GT11H-C60(6m) User preparing RS232 connection diagram 3)	GT14 Handy	6m	31 controllers for 1 GOT
LT230, LT300 LT400, LT830 DZ1000 DZ2000 DB1000 DB2000	User preparing RS485 connection diagram 1)	1200m	SC8-10	RS-232	GT11H-C30(3m) GT11H-C60(6m) User preparing RS232 connection diagram 3)	GT14 Handy	6m	

*1 Product manufactured by CHINO CORPORATION. For details of the product, contact CHINO corporation.
*2 The distance from the GOT to the interface converter (Connection cable 2) + External cable)

40.2.2 Connecting to KP1000, KP2000, AL3000, AH3000, SE3000, KE3000, LE5100, LE5200, LE5300, or JU Series

■ When connecting to controllers

Communication driver

CHINO Controllers(MODBUS)

(1) When using the connector conversion box

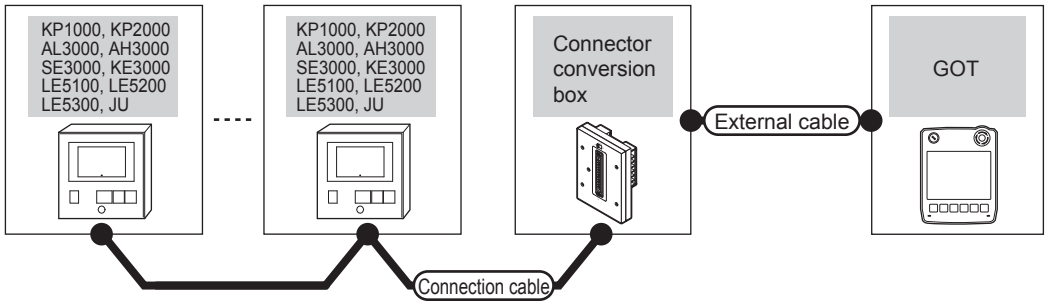

Indicating controller		Connection cable	Connector conversion box	External cable	GOT model	Total distance	Number of connectable equipment
Model	Communication type	Cable model Connection diagram number					
KP1000, KP2000 AL3000, AH3000 SE3000, KE3000 LE5100, LE5200 LE5300, JU	RS-232	User preparing RS232 connection diagram 1)	GT11H-CNB-37S	GT11H-C30-37P(3m)	GT14 Handy	6m	1 controller for 1 GOT
	RS-422	User preparing RS422 connection diagram 2)	GT11H-CNB-37S	GT11H-C30-37P(3m) GT11H-C60-37P(6m) GT11H-C100-37P(10m)	GT14 Handy	13m	10 controllers for 1 GOT

(2) When using the external cable (GT11H-C□□□-37P)

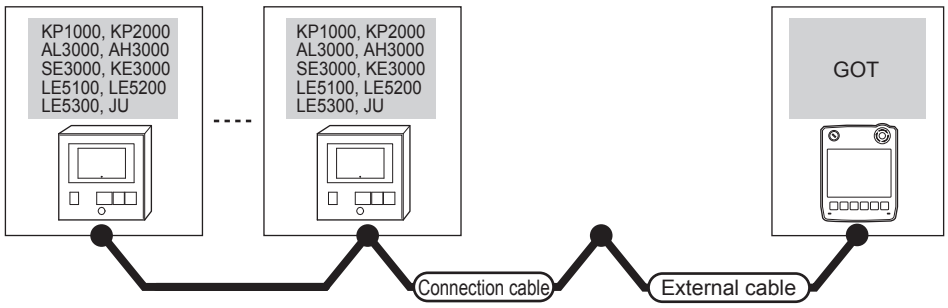

Indicating controller		Connection cable	External cable	GOT model	Total distance	Number of connectable equipment
Model	Communication type	Cable model Connection diagram number				
KP1000, KP2000 AL3000, AH3000 SE3000, KE3000 LE5100, LE5200 LE5300, JU	RS-232	User preparing RS232 connection diagram 2)	GT11H-C30-37P(3m)	GT14 Handy	6m	1 controller for 1 GOT
	RS-422	User preparing RS422 connection diagram 3)	GT11H-C30-37P(3m) GT11H-C60-37P(6m) GT11H-C100-37P(10m)	GT14 Handy	13m	10 controllers for 1 GOT

(3) When using the external cable (GT11H-C□□□)

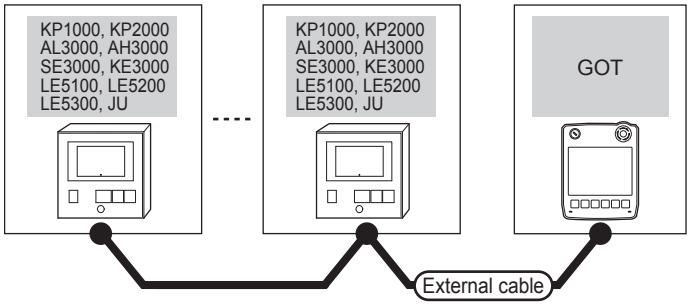

Indicating controller		External cable	GOT model	Total distance	Number of connectable equipment
Model	Communication type				
KP1000, KP2000 AL3000, AH3000 SE3000, KE3000 LE5100, LE5200 LE5300, JU	RS-232	GT11H-C30(3m) GT11H-C60(6m) (User preparing) RS232 connection diagram 3)	GT14 Handy	6m	1 controller for 1 GOT
	RS-422	GT11H-C30(3m) GT11H-C60(6m) GT11H-C100(10m) (User preparing) RS422 connection diagram 4)	GT14 Handy	13m	10 controllers for 1 GOT

■ When connecting to converter

(1) When using the connector conversion box

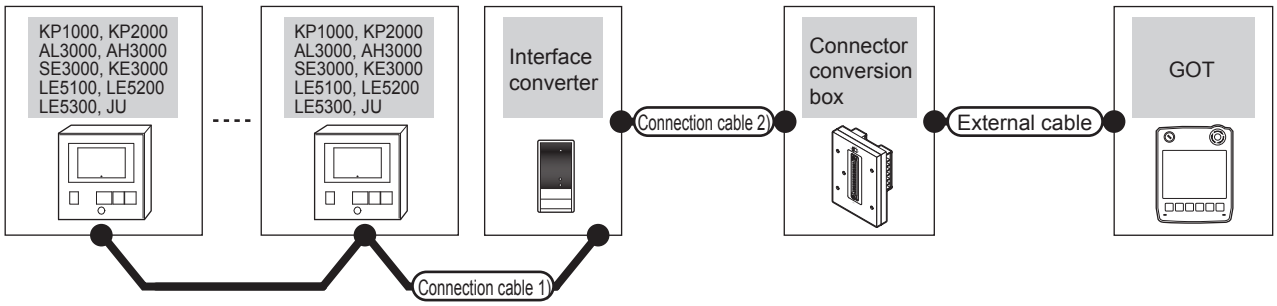

Indicating controller	Connection cable 1)		Interface converter*1		Connection cable 2)	Connector conversion box	External cable	GOT model	Total distance *2	Number of connectable equipment
Model	Cable model Connection diagram number	Max. distance	Model	Communication type	Cable model Connection diagram number					
KP1000, KP2000 AL3000, AH3000 SE3000, KE3000 LE5100, LE5200 LE5300, JU	(User preparing) RS422 connection diagram 1)	1200m	SC8-10	RS-232	(User preparing) RS232 connection diagram 1)	GT11H-CNB-37S	GT11H-C30-37P (3m)	GT14 Handy	6m	31 controllers for 1 GOT
KP1000, KP2000 AL3000, AH3000	(User preparing) RS485 connection diagram 1)	1200m	SC8-10	RS-232	(User preparing) RS232 connection diagram 1)			GT14 Handy	6m	31 controllers for 1 GOT
SE3000, KE3000 LE5100, LE5200 LE5300, JU	(User preparing) RS485 connection diagram 2)	1200m	SC8-10	RS-232	(User preparing) RS232 connection diagram 1)			GT14 Handy	6m	31 controllers for 1 GOT

*1 Product manufactured by CHINO CORPORATION. For details of the product, contact CHINO corporation.

*2 The distance from the GOT to the interface converter (Connection cable 2) + External cable)

(2) When using the external cable (GT11H-C□□□-37P)

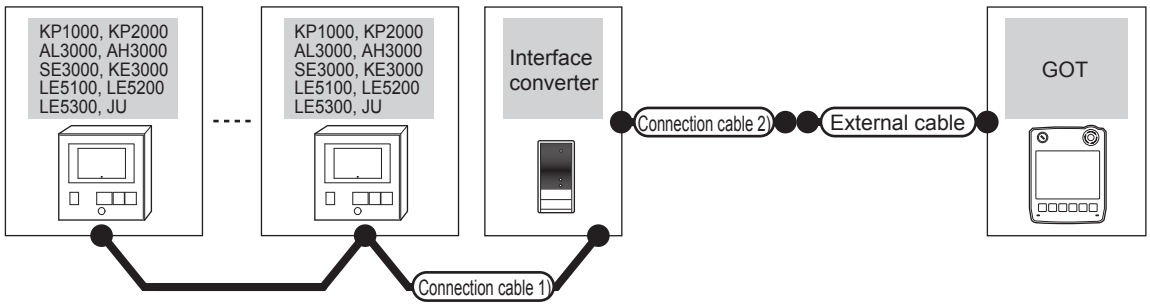

Indicating controller	Connection cable 1)		Interface converter*1		Connection cable 2)	External cable	GOT model	Total distance *2	Number of connectable equipment
Model	Cable model Connection diagram number	Max. distance	Model	Communication type	Cable model Connection diagram number				
KP1000, KP2000 AL3000, AH3000 SE3000, KE3000 LE5100, LE5200 LE5300, JU	User preparing RS422 connection diagram 1)	1200m	SC8-10	RS-232	User preparing RS232 connection diagram 2)	GT11H-C30-37P (3m)	GT14 Handy	6m	31 controllers for 1 GOT
KP1000, KP2000 AL3000, AH3000	User preparing RS485 connection diagram 1)								
SE3000, KE3000 LE5100, LE5200 LE5300, JU	User preparing RS485 connection diagram 2)								

*1 Product manufactured by CHINO CORPORATION. For details of the product, contact CHINO corporation.
*2 The distance from the GOT to the interface converter (Connection cable 2) + External cable)

(3) When using the external cable (GT11H-C□□□)

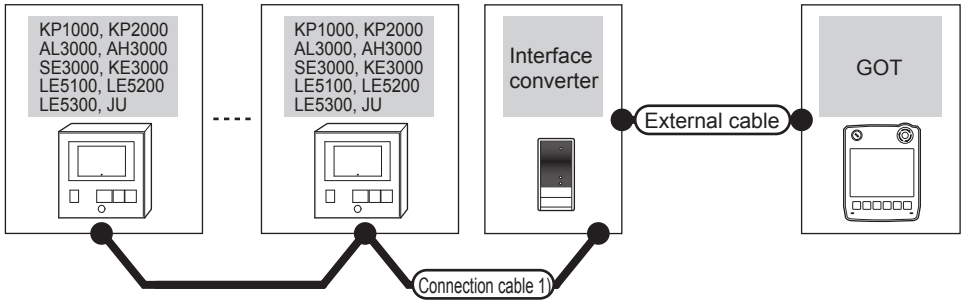

Indicating controller	Connection cable 1)		Interface converter*1		External cable	GOT model	Total distance *2	Number of connectable equipment
Model	Cable model Connection diagram number	Max. distance	Model	Communication type				
KP1000, KP2000 AL3000, AH3000 SE3000, KE3000 LE5100, LE5200 LE5300, JU	User preparing RS422 connection diagram 1)	1200m	SC8-10	RS-232	GT11H-C30(3m) GT11H-C60(6m) User preparing RS232 connection diagram 3)	GT14 Handy	6m	31 controllers for 1 GOT
KP1000, KP2000 AL3000, AH3000	User preparing RS485 connection diagram 1)							
SE3000, KE3000 LE5100, LE5200 LE5300, JU	User preparing RS485 connection diagram 2)							

*1 Product manufactured by CHINO CORPORATION. For details of the product, contact CHINO corporation.
*2 The distance from the GOT to the interface converter (Connection cable 2) + External cable)

40.2.3 Connecting to GT120 Series

Communication driver
CHINO Controllers(MODBUS)

(1) When using the connector conversion box

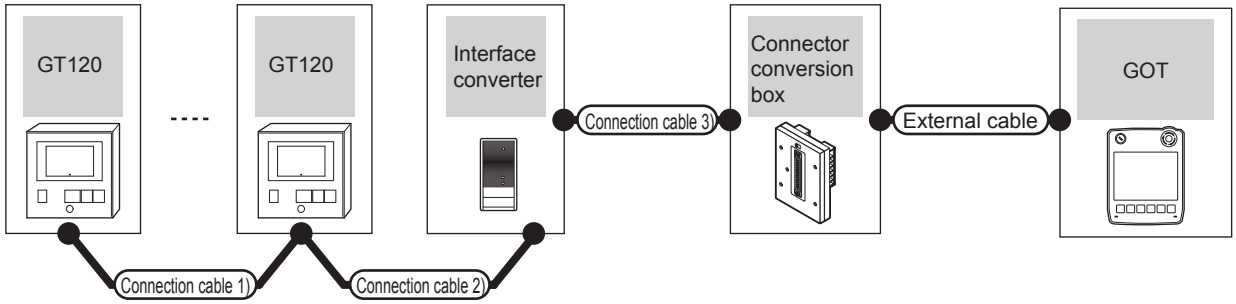

\

Indicating controller	Connection cable 1)	Connection cable 2)	Max. distance	Interface converter*1		Connection cable 3)	Connector conversion box	External cable	GOT model	Total distance *2	Number of connectable equipment
Model	Cable model Connection diagram number	Cable model Connection diagram number		Model	Communication type	Cable model Connection diagram number					
GT120	GT8-CDD(60mm) or User preparing RS485 connection diagram 3)	GT8-CDM(3m) or User preparing RS485 connection diagram 4)	1200m	SC8-10	RS-232	User preparing RS232 connection diagram 1)	GT11H-CNB-37S	GT11H-C30-37P (3m)	GT14 Handy	6m	31 controllers for 1 GOT

*1 Product manufactured by CHINO CORPORATION. For details of the product, contact CHINO corporation.
*2 The distance from the GOT to the interface converter (Connection cable 2) + External cable)

(2) When using the external cable (GT11H-C□□□-37P)

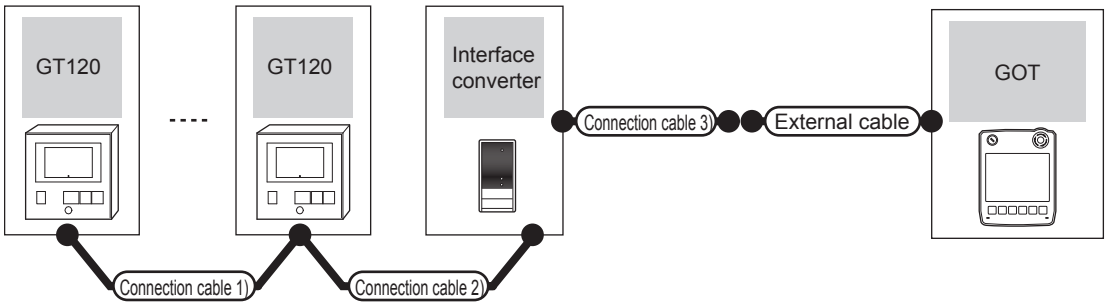

Indicating controller	Connection cable 1)	Connection cable 2)	Max. distance	Interface converter*1		Connection cable 3)	External cable	GOT model	Total distance *2	Number of connectable equipment
Model	Cable model Connection diagram number	Cable model Connection diagram number		Model	Communication type	Cable model Connection diagram number				
GT120	GT8-CDD(60mm) or User preparing RS485 connection diagram 3)	GT8-CDM(3m) or User preparing RS485 connection diagram 4)	1200m	SC8-10	RS-232	User preparing RS232 connection diagram 2)	GT11H-C30-37P (3m)	GT14 Handy	6m	31 controllers for 1 GOT

*1 Product manufactured by CHINO CORPORATION. For details of the product, contact CHINO corporation.
*2 The distance from the GOT to the interface converter (Connection cable 2) + External cable)

(3) When using the external cable (GT11H-C□□□)

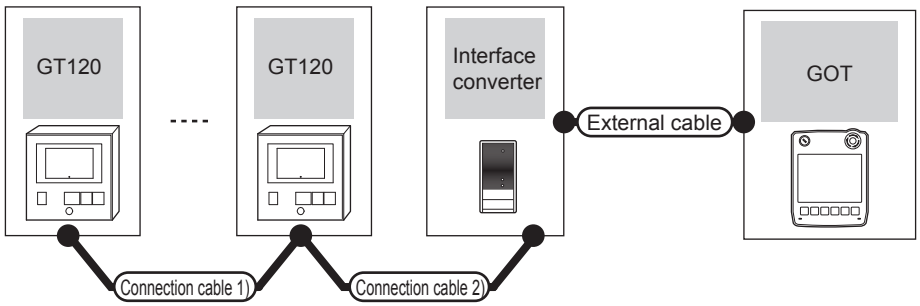

Indicating controller	Connection cable 1)	Connection cable 2)	Max. distance	Interface converter*1		External cable	GOT model	Total distance *2	Number of connectable equipment
Model	Cable model Connection diagram number	Cable model Connection diagram number		Model	Communication type				
GT120	GT8-CDD(60mm) or User preparing RS485 connection diagram 3)	GT8-CDM(3m) or User preparing RS485 connection diagram 4)	1200m	SC8-10	RS-232	GT11H-C30(3m) GT11H-C60(6m) User preparing RS232 connection diagram 3)	GT14 Handy	6m	31 controllers for 1 GOT

*1 Product manufactured by CHINO CORPORATION. For details of the product, contact CHINO corporation.

*2 The distance from the GOT to the interface converter (Connection cable 2) + External cable)

40.3 Connection Diagram

The following diagram shows the connection between the GOT and the PLC.

40.3.1 RS-232 cable

■ Connection diagram

RS232 connection diagram 1)

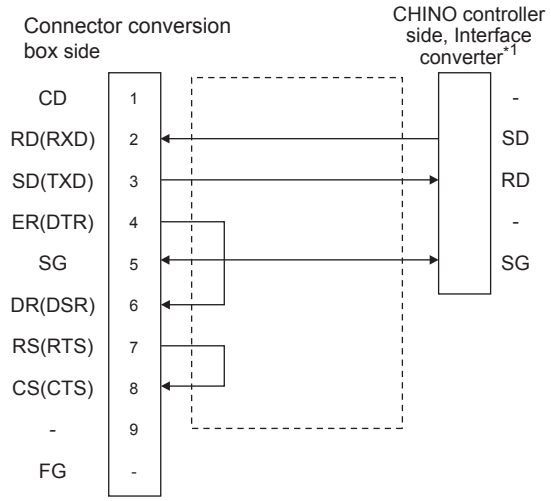

*1 Terminal number of the controller and the converter differ depending on the model. Refer to the following table.

RS232 connection diagram 2)

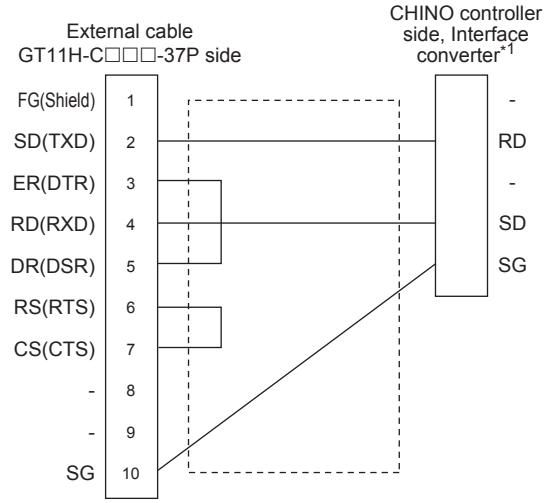

*1 Terminal number of the controller and the converter differ depending on the model. Refer to the following table.

RS232 connection diagram 3)

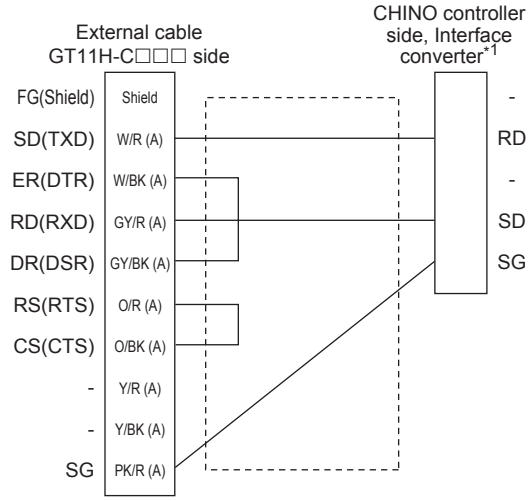

*1 Terminal number of the controller and the converter differ depending on the model. Refer to the following table.

Signal name	Controller					Interface converter
	LT300	LT400	DZ1000 DZ2000	DB1000	DB2000	SC8-10
	Terminal No.	Terminal No.	Terminal No.	Terminal No.	Terminal No.	Terminal No.
SD	11	11	19	13	27	2
RD	13	13	21	12	26	1
SG	15	15	23	14	28	3

Signal name	Controller		
	KP1000	KP2000*2	
		R,B,C,D	B,E
	Terminal No.	Terminal No.	Terminal No.
SD	13	27	30
RD	12	26	29
SG	14	28	31

*2 For KP2000 series, the terminal No. differs according to the model. This indicates the symbols of the position 10) (third zone) of the following models.
Model: KP2 4) 5) 6) 7) 8) 9) 10) - 12) 13) 14)
For the symbol B, two terminal numbers are available. Select one as required.

■ Precautions when preparing a cable

(1) Cable length
The total distance (between the GOT and a controller) of RS-232 cable must be 6m or less.

(2) Connector conversion box side connector
For the connector conversion box side connector, refer to the following.
☞ 6.6 Connector Conversion Box

(3) External cable side connector
For the connector specifications of the external cable side, refer to the following.
☞ 8.2 External Cable, Relay Cable

(4) CHINO controller side connector
Use the connector compatible with the CHINO controller side module.
For details, refer to the user's manual of the CHINO controller.

40.3.2 RS-422 cable

■ Connection diagram

RS422 connection diagram 1)

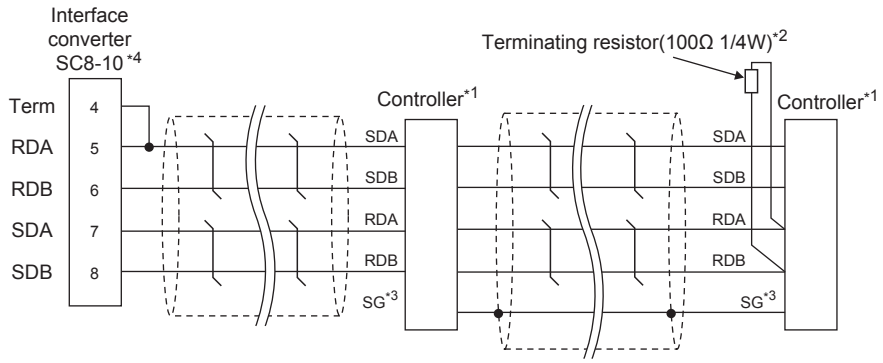

*1 Pin No. of controller differs depending on the model. Refer to the following table.
*2 Terminating resistor should be provided for a controller which will be a terminal.
*3 Do not connect SG of the controller and SG of the converter.
*4 Set the Communication Type switch of the converter to RS-422.

Signal name	Controller type								
	LT300	LT400	DZ1000, DZ2000	DB1000	DB2000	KP1000	KP2000*5		JU
							A	C, F	
	Terminal No.	Terminal No.	Terminal No.	Terminal No.	Terminal No.	Terminal No.	Terminal No.	Terminal No.	Terminal No.
SDA	11	11	19	14	28	14	28	31	1
SDB	12	12	20	15	29	15	29	32	2
RDA	13	13	21	12	26	12	26	29	3
RDB	14	14	22	13	27	13	27	30	4
SG	15	15	23	16	30	16	30	28	5

*5 For KP2000 series, the terminal No. differs according to the model.
This indicates the symbols of the position 10) (third zone) of the following models.
Model: KP2 4) 5) 6) 7) 8) 9) 10) - 12) 13) 14)

RS422 connection diagram 2)

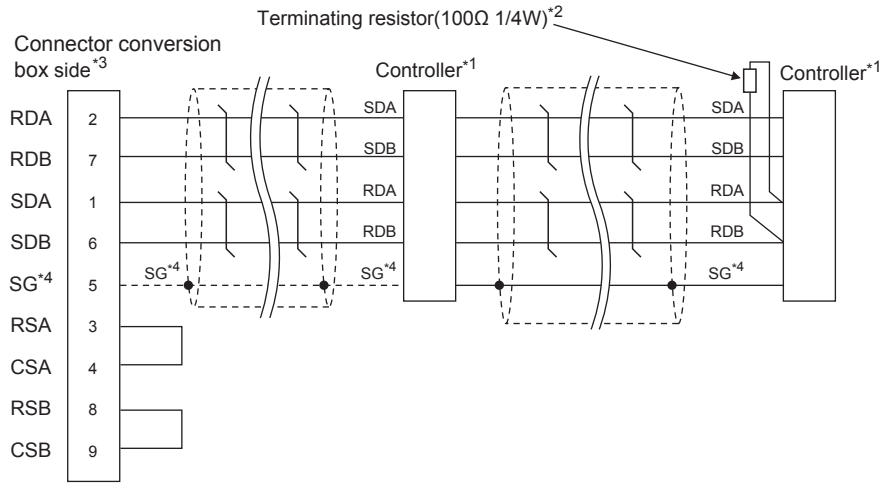

RS422 connection diagram 3)

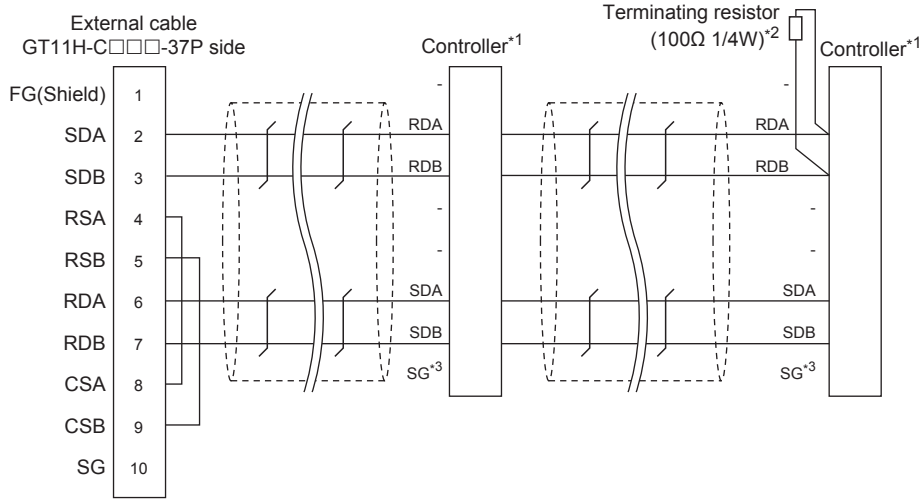

RS422 connection diagram 4)

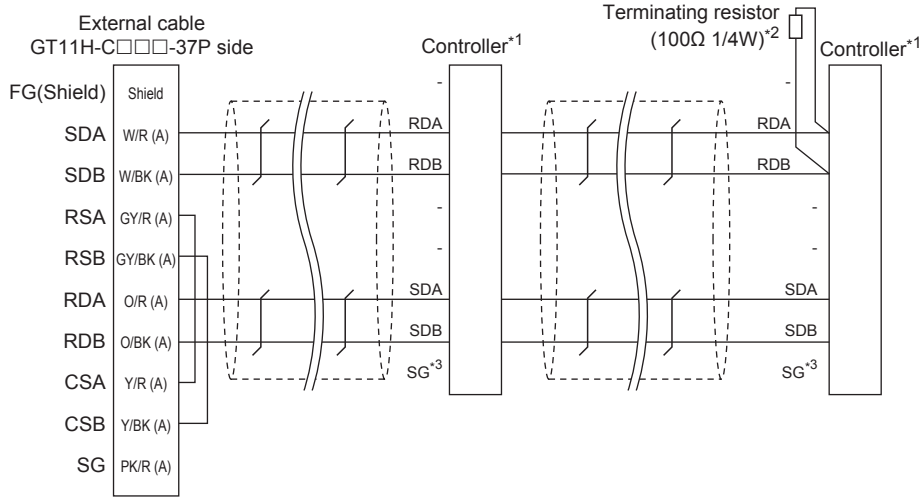

*1 Pin No. of controller differs depending on the model. Refer to the table on the next page.

*2 Terminating resistor should be provided for a controller which will be a terminal.

*3 When connecting to DB1000 or DB200 Series, connect SG of the controller and SG of the GOT.

Signal name	Controller type								
	LT300	LT400	DZ1000, DZ2000	DB1000	DB2000	KP1000	KP2000*5		JU
							A	C, F	
	Terminal No.	Terminal No.	Terminal No.	Terminal No.	Terminal No.	Terminal No.	Terminal No.	Terminal No.	Terminal No.
SDA	11	11	19	14	28	14	28	31	1
SDB	12	12	20	15	29	15	29	32	2
RDA	13	13	21	12	26	12	26	29	3
RDB	14	14	22	13	27	13	27	30	4
SG	15	15	23	16	30	16	30	28	5

*4 For KP2000 series, the terminal No. differs according to the model.
This indicates the symbols of the position 10) (third zone) of the following models.
Model: KP2 4) 5) 6) 7) 8) 9) 10) - 12) 13) 14)

■ Precautions when preparing a cable

(1) Cable length

(a) The length of the RS-422 cable used for connecting the controller to the converter
The length of the RS-422 cable must be 1200m or less.

(b) The length of the RS-422 cable used for connecting the controller to the GOT
The total distance (between GOT and the controller) of the RS-422 cable must be 13m or less.

(2) Connector conversion box side connector
For the connector conversion box side connector, refer to the following.

☞ 6.6 Connector Conversion Box

(3) External cable side connector
For the connector specifications of the external cable side, refer to the following.

☞ 8.2 External Cable, Relay Cable

(4) CHINO controller side connector
Use the connector compatible with the CHINO controller side module.
For details, refer to the user's manual of the CHINO controller.

■ Connecting terminating resistors

(1) CHINO controller side
When connecting a CHINO controller to the GOT, a terminating resistor must be connected to the CHINO controller.

☞ User's Manual of the CHINO controller

40.3.3 RS-485 cable

■ Connection diagram

RS485 connection diagram 1)

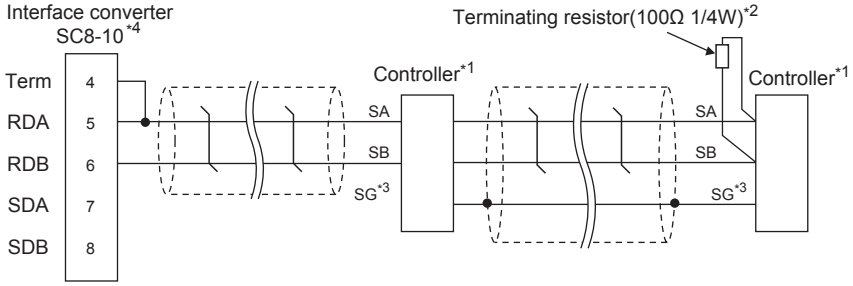

*1 Pin No. of controller differs depending on the model. Refer to the following table.
*2 Terminating resistor should be provided for a controller which will be a terminal.
*3 Do not connect SG of the controller and SG of the GOT.
*4 Set the Communication Type switch of the converter to RS-485.

Signal name	Controller type									
	LT230	LT300	LT400	LT830	DZ1000, DZ2000	DB1000	DB2000	KP1000	KP2000*5	
									S, E, F, G	D, G
	Terminal No.	Terminal No.	Terminal No.	Terminal No.	Terminal No.	Terminal No.	Terminal No.	Terminal No.	Terminal No.	Terminal No.
SA	6	11	11	6	19	12	26	12	26	29
SB	7	12	12	7	20	13	27	13	27	30
SG	8	15	15	8	23	14	28	14	28	31

*5 For KP2000 series, the terminal No. differs according to the model.
This indicates the symbols of the position 10) (third zone) of the following models.
Model: KP2 4) 5) 6) 7) 8) 9) 10) - 12) 13) 14)
For the symbol G, two terminal numbers are available. Select as necessary.

RS485 connection diagram 2)

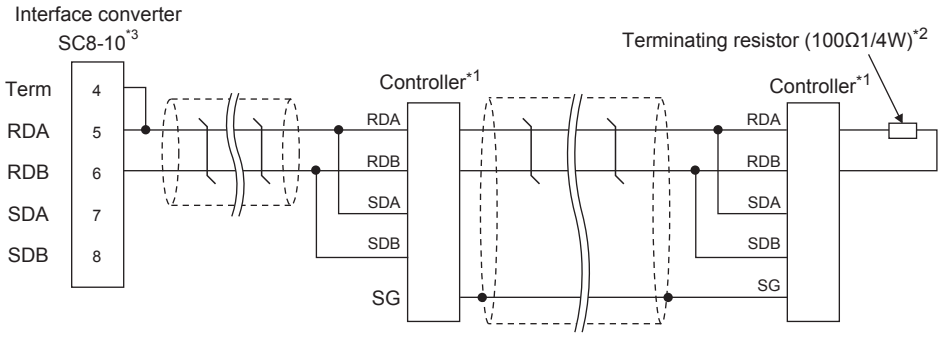

*1 Pin No. of controller differs depending on the model. Refer to the following table.
*2 Terminating resistor should be provided for a controller which will be a terminal.
*3 Set the Communication Type switch of the converter to RS-485.

Signal name	Controller type			
	SE3000	JU	KE3000	LE5000
	Terminal No.	Terminal No.	Terminal No.	Terminal No.
RDA	RDA	3	RDA	RDA
RDB	RDB	4	RDB	RDB
SDA	SDA	1	SDA	SDA
SDB	SDB	2	SDB	SDB
SG	SG	5	SG	SG

RS485 connection diagram 3)

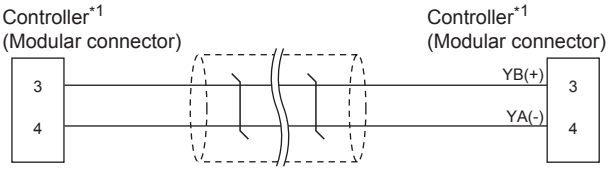

*1 For details of the pin assignment, refer to the following manual.

☞ User's Manual of the CHINO controller

RS485 connection diagram 4)

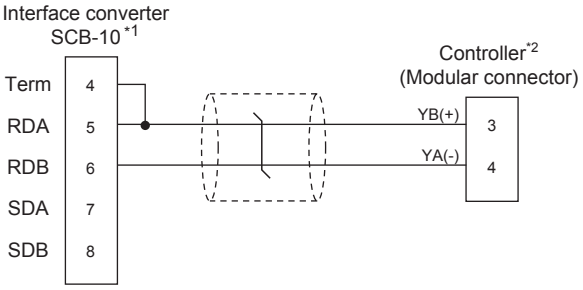

*1 Set the Communication Type switch of the converter to RS-485.

*2 For details of the pin assignment, refer to the following manual.

☞ User's Manual of the CHINO controller

■ Precautions when preparing a cable

(1) Cable length

The length of the RS-485 cable must be 1200m or less.

(2) CHINO controller side connector

Use the connector compatible with the CHINO controller side module.
For details, refer to the user's manual of the CHINO controller.

■ Connecting terminating resistors

(1) CHINO controller side

The terminating resistor must be connected to the CHINO temperature controller.

☞ User's Manual of the CHINO controller

40.4 GOT Side Settings

40.4.1 Setting communication interface (Communication settings)

Set the channel of the equipment connected to the GOT.

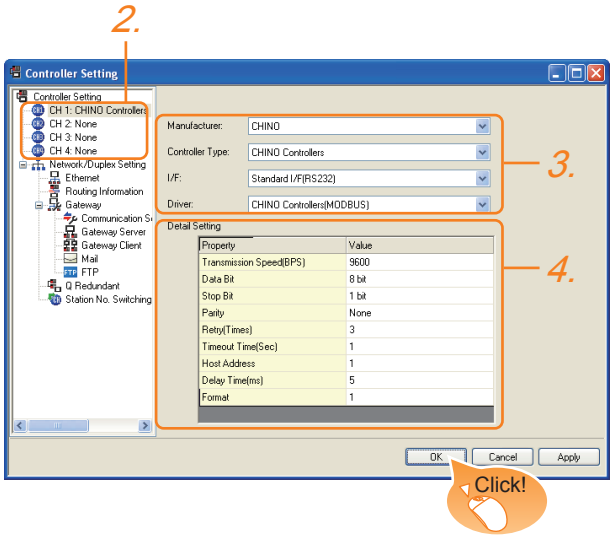

1. Select [Common] → [Controller Setting] from the menu.
2. The Controller Setting window is displayed. Select the channel to be used from the list menu.
3. Set the following items.
   - Manufacturer: CHINO
   - Controller Type: CHINO Controllers
   - I/F: Interface to be used
   - Driver: CHINO Controller (MODBUS)
4. The detailed setting is displayed after Manufacturer, Controller Type, I/F, and Driver are set.
   Make the settings according to the usage environment.
   40.4.2 Communication detail settings

Click the [OK] button when settings are completed.

POINT

The settings of connecting equipment can be confirmed in [I/F Communication Setting].
For details, refer to the following.
18.1.2 I/F communication setting

40.4.2 Communication detail settings

Make the settings according to the usage environment.

Item	Description	Range
Transmission Speed	Set this item when change the transmission speed used for communication with the connected equipment. (Default: 9600bps)	9600bps, 19200bps, 38400bps, 57600bps, 115200bps
Data Bit	Set this item when change the data length used for communication with the connected equipment. (Default: 8bit)	7bit/8bit
Stop Bit	Specify the stop bit length for communications. (Default: 1bit)	1bit/2bits
Parity	Specify whether or not to perform a parity check, and how it is performed during communication. (Default: None)	None Even Odd
Retry	Set the number of retries to be performed when a communication error occurs. (Default: 3times)	0 to 5times
Timeout Time	Set the time period for a communication to time out. (Default: 1sec)	1 to 30sec
Host Address	Specify the host address (station No. of the GOT to which the controller is connected) in the connected network. (Default: 1)	1 to 99
Delay Time	Set this item to adjust the transmission timing of the communication request from the GOT. (Default: 5ms)	0 to 300ms
Format	Select the communication format. (Default: 1) Format 1: Accessible to LT230/300/400/830, DZ1000/2000, Not accessible to GT120 Format 2: Accessible to GT120	1/2

POINT

(1) Format
When connecting to GT120, specify format 2.

(2) Delay Time
When connecting to the following models, set the send delay time to 30ms or more.

Model name
DZ1000, DZ2000

(3) Communication interface setting by Utility
The communication interface setting can be changed on the Utility's [Communication setting] after writing [Communication Settings] of project data.
For details on the Utility, refer to the following manual.
11. COMMUNICATION INTERFACE SETTING (COMMUNICATION SETTING)

(4) Precedence in communication settings
When settings are made by GT Designer3 or the Utility, the latest setting is effective.

40.5 Controller Side Setting

POINT

(1) CHINO controller
For details of CHINO controller, refer to the following manual.

☞ User's Manual of the CHINO controller

(2) Interface converter
For details on communication settings of the RS232C/RS485 converter, refer to the following manual.

☞ User's Manual of RS232C/RS485 converter

Model		Refer to
Controller	LT230, LT300	40.5.1
	LT400, LT830	40.5.2
	DZ1000, DZ2000	40.5.3
	DB1000, DB2000	40.5.4
	GT120	40.5.5
	KP1000, KP2000	40.5.6
	AL3000, AH3000	40.5.7
	SE3000	40.5.8
	JU	40.5.9
	KE3000	40.5.10
	LE5100, LE5200, LE5300	40.5.11
Interface converter	SC8-10	40.5.12

40.5.1 Connecting to LT230, LT300 Series

■ Key Lock setting

To write the Digital and the Analog parameters, set the Key Lock setting to Lock 4.

■ Communication settings

Set the communication settings with controller key operation.

Item	Set value
Protocol	rtU: MODBUS RTU
Function	Com: Upper communication
Station No.*1	1 to 99
Transmission speed*2	9600bps, 19200bps
Character*2 (Bit length, Parity bit, Stop bit)	5: 8bits, None, 1bit 6: 8bits, None, 2bits 7: 8bits, Even, 1bit 8: 8bits, Even, 2bits 9: 8bits, Odd, 1bit 10: 8bits, Odd, 2bits

*1 Avoid duplication of the station No. with any of the other units.
*2 Adjust the settings with GOT settings.

40.5.2 Connecting to LT400, LT830 Series

■ Key Lock setting

To write the Digital and the Analog parameters, set the following Key Lock setting.

- LT400: Lock4
- LT830: Lock3

■ Communication settings

Set the communication settings with controller key operation.

Item	Set value
Protocol	rtU: MODBUS RTU
Function	Com: Upper communication
Station No.*1	1 to 99
Transmission speed*2	9600bps, 19200bps
Character*2 (Bit length, Parity bit, Stop bit)	8N1: 8bits, None, 1bit 8N2: 8bits, None, 2bits 8E1: 8bits, Even, 1bit 8E2: 8bits, Even, 2bits 8O1: 8bits, Odd, 1bit 8O2: 8bits, Odd, 2bits

*1 Avoid duplication of the station No. with any of the other units.
*2 Adjust the settings with GOT settings.

40.5.3 Connecting to DZ1000, DZ2000 Series

■ Key Lock setting

To write the Digital and the Analog parameters, set the Key Lock setting to Lock 2.

■ Communication settings

Set the communication settings with controller key operation.

Item	Set value
Protocol	rtU: MODBUS RTU
Function	Com: Upper communication
Station No.*1	1 to 31
Transmission speed*2	9600bps, 19200bps
Data bit	8bits (fixed)
Stop Bit	1bit (fixed)
Parity bit	None (fixed)

*1 Avoid duplication of the station No. with any of the other units.
*2 Adjust the settings with GOT settings.

40.5.4 Connecting to DB1000, DB2000 Series

■ Communication settings

Set the communication settings with controller key operation.

Item	Set value
Protocol	MODBUS (RTU)
Function	COM: Upper communication
Station No.*1	01 to 99
Transmission speed*2	9600bps, 19200bps, 38400bps
Character*2	7BIT/EVEN/STOP1 7BIT/EVEN/STOP2 7BIT/ODD/STOP1 7BIT/ODD/STOP2 8BIT/NON/STOP1 8BIT/NON/STOP2 8BIT/EVEN/STOP1 8BIT/EVEN/STOP2 8BIT/ODD/STOP1 8BIT/ODD/STOP2

*1 Avoid duplication of the station No. with any of the other units.
*2 Adjust the settings with GOT settings.

40.5.5 Connecting to GT120 Series

■ Key Lock setting

To write the Digital and the Analog parameters, set the Key Lock setting to Lock 3.

■ Communication settings

Release the controller lock function in advance and set the following communication settings.
After completing the communication settings, set the Key Lock setting to Lock 3.

Item	Set value
Communication protocol	comr: MODBUS RTU
Station No.*1	1 to 95
Transmission speed*2	96: 9600bps 192: 19200bps
Data bit	8bits (fixed)
Stop bit*2	1bit, 2bits
Parity bit*2	nonE: None EVEn: Even odd: Odd

*1 Avoid duplication of the station No. with any of the other units.
*2 Adjust the settings with GOT settings.

40.5.6 Connecting to KP1000, KP2000

■ Key Lock setting

To write the Digital and the Analog parameters, set the Key Lock setting.

■ Communication settings

Set the communication settings with controller key operation.

Item	Set value
Protocol	MODBUS (RTU)
Function	COM
Station No.*1	1 to 99
Transmission speed*2	2400bps, 4800bps, 9600bps, 19200bps, 38400bps
Character*2 (Bit length, Parity bit, Stop bit)	8BIT/NON/STOP1 8BIT/NON/STOP2 8BIT/EVEN/STOP1 8BIT/EVEN/STOP2 8BIT/ODD/STOP1 8BIT/ODD/STOP2

*1 Avoid duplication of the station No. with any of the other units.
*2 Adjust the settings with GOT settings.

40.5.7 Connecting to AL3000, AH3000

■ Key Lock setting

To write the Digital and the Analog parameters, set the Key Lock setting.

■ Communication settings

Set the communication settings with controller key operation.

Item	Set value
Protocol	MODBUS
Transmission code	rtu
Communication type	RS-232C, RS-422A, RS-485
Station No.*1	1 to 31
Transmission speed*2	2400bps, 4800bps, 9600bps, 19200bps
Character*2 (Bit length, Parity bit, Stop bit)	[8N1]: 8bits, None, 1bit [8N2]: 8bits, None, 2bits [8E1]: 8bits, Even, 1bit [8E2]: 8bits, Even, 2bits [8O1]: 8bits, Odd, 1bit [8O2]: 8bits, Odd, 2bits

*1 Avoid duplication of the station No. with any of the other units.
*2 Adjust the settings with GOT settings.

40.5.8 Connecting to SE3000

■ Key Lock setting

To write the Digital and the Analog parameters, set the Key Lock setting.

■ Communication settings

Make the communication settings using CHINO parameter setting software (PASS).

Item	Set value
Protocol	MODBUS RTU
Station No.*1*3	1 to 31
Transmission speed*2*3	9600bps, 19200bps
Data bit	8bits (fixed)
Parity bit*2	Even, Odd, None
Stop bit*2	1bit, 2bits
Transmission code	Binary (fixed)
Error check	CRC-16 (fixed)

*1 Avoid duplication of the station No. with any of the other units.
*2 Adjust the settings with GOT settings.
*3 Station No. and Transmission speed can also be set by switch SW1.

■ Setting by Switch (SW1)

Station No. and Transmission speed can be set.

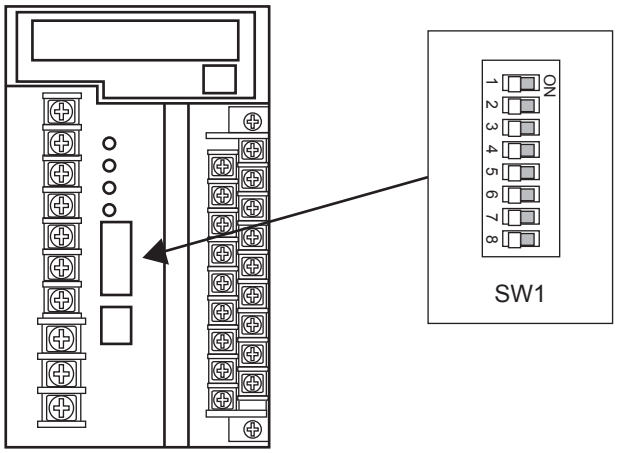

(1) Station No.

SW1-1	SW1-2	SW1-3	SW1-4	SW1-5	Station No.
OFF	OFF	OFF	OFF	OFF	1
ON	OFF	OFF	OFF	OFF	1
OFF	ON	OFF	OFF	OFF	2
ON	ON	OFF	OFF	OFF	3
		:			
ON	OFF	ON	ON	ON	29
OFF	ON	ON	ON	ON	30
ON	ON	ON	ON	ON	31

(2) Transmission speed

SW1-6	SW1-7	Communication port	Transmission speed
OFF	OFF	Upper communication	9600bps
OFF	ON	Upper communication	19200bps
ON	OFF	ENG	-
ON	ON	This combination is not permitted.	

■ Setting by Switch (SW2)

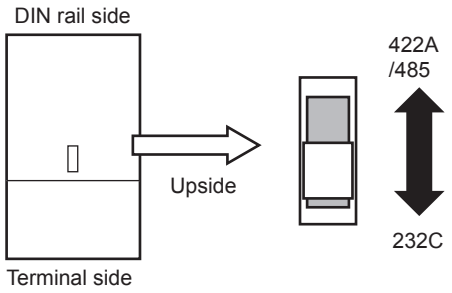

SW2	
Front side (Terminal side)	Back side (DIN rail side)
RS232C	RS422A/485

40.5.9 Connecting to JU

■ Key Lock setting

To write the Digital and the Analog parameters, set the Key Lock setting.

■ Communication settings

Set the communication settings with controller key operation.

Item	Set value
Protocol	rtU
Station No.*1	1 to 99
Transmission speed*2	9600bps, 19200bps
Character*2 (Bit length, Parity bit, Stop bit)	[8N1]: 8bits, None, 1bit [8N2]: 8bits, None, 2bits [8E1]: 8bits, Even, 1bit [8E2]: 8bits, Even, 2bits [8O1]: 8bits, Odd, 1bit [8O2]: 8bits, Odd, 2bits

*1 Avoid duplication of the station No. with any of the other units.
*2 Adjust the settings with GOT settings.

40.5.10 Connecting to KE3000

■ Key Lock setting

To write the Digital and the Analog parameters, set the Key Lock setting.

■ Communication settings

Make the communication settings by operating the switches SW2 and SW3 of the module.

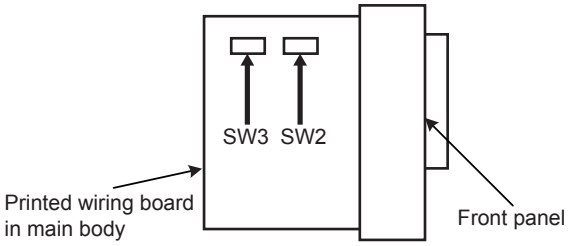

(1) Setting by Switch (SW2)

Setting item	Set value	SW2-2	SW2-3
Transmission code*2	MODBUS RTU	OFF	-
Transmission speed*1	9600bps	-	OFF
	19200bps	-	ON
Transmission character structure*2	8bits Disable 1bit (fixed)	-	-

*1 Adjust the settings with GOT settings.
*2 When the transmission code is MODBUS RTU, the setting of the transmission character structure is fixed.

(2) Setting by Switch (SW3)

Set the station No. as follows.

SW3-4	SW3-5	SW3-6	SW3-7	SW3-8	Station address*1
OFF	OFF	OFF	OFF	OFF	1
ON	OFF	OFF	OFF	OFF	1
OFF	ON	OFF	OFF	OFF	2
ON	ON	OFF	OFF	OFF	3
			:		
			:		
ON	OFF	ON	ON	ON	29
OFF	ON	ON	ON	ON	30
ON	ON	ON	ON	ON	31

*1 Select the station address without overlapping with that of other units.

40.5.11 Connecting to LE5100, LE5200, LE5300

■ Key Lock setting

To write the Digital and the Analog parameters, set the Key Lock setting.

■ Communication settings

Set the communication settings with controller key operation.

Item	Set value
RTU/ASCII	RTU
Station address*1	1 to 99
Transmission speed*2	9600bps, 19200bps
Character*2 (Bit length, Parity bit, Stop bit)	[8N1]: 8bits, None, 1bit [8N2]: 8bits, None, 2bits [8E1]: 8bits, Even, 1bit [8E2]: 8bits, Even, 2bits [8O1]: 8bits, Odd, 1bit [8O2]: 8bits, Odd, 2bits

*1 Avoid duplication of the station No. with any of the other units.
*2 Adjust the settings with GOT settings.

40.5.12 Connecting to converter SC8-10

■ Communication settings

Make the communication settings using a setting switch.

Item	Set value
Transmission speed select switch*1	9600bps, 19200bps
Communication type switch	RS-485, RS-422

*1 Adjust the settings with GOT and controller settings.

■ Settings by switch

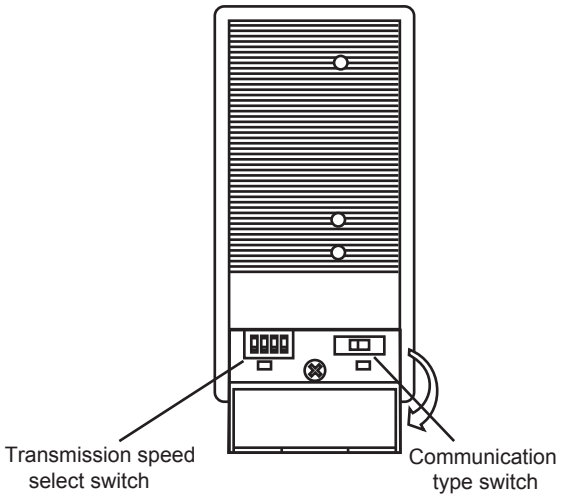

(1) Transmission speed setting

Setting item	Set value	Switch No.			
		1	2	3	4
Communication speed	9600bps	OFF	ON	OFF	OFF
	19200bps	OFF	OFF	ON	OFF

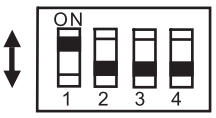

(2) Communication type setting

Setting item
RS-485/RS-422

40.5.13 Station number setting

Set each station number so that no station number overlaps. The station number can be set without regard to the cable connection order. There is no problem even if station numbers are not consecutive.

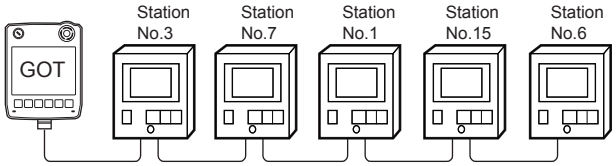

Examples of station number setting

(1) Direct specification

When setting the device, specify the station number of the controller of which data is to be changed.

Model	Specification range	Refer to
LT230, LT300, LT400, LT830	1 to 99	40.5.1 40.5.2
DZ1000, DZ2000	1 to 31	40.5.3
DB1000, DB2000	1 to 99	40.5.4
GT120	1 to 95	40.5.5
KP1000, KP2000	1 to 99	40.5.6
AL3000, AH3000	1 to 31	40.5.7
SE3000	1 to 31	40.5.8
JU	1 to 99	40.5.9
KE3000	1 to 31	40.5.10
LE5100, LE5200, LE5300	1 to 99	40.5.11

(2) Indirect specification

When setting the device, indirectly specify the station number of the controller of which data is to be changed using the 16-bit GOT internal data register (GD10 to GD25).

When specifying the station No. from 100 to 115 on GT Designer3, the value of GD10 to GD25 compatible to the station No. specification will be the station No. of the controller.

Specification station No.	Compatible device	Setting range
100	GD10	1 to 99: LT230, LT300, LT400, LT830 DB1000, DB2000, LE5100, LE5200 ,LE5300, JU, KP 1 to 31: DZ1000, DZ2000, SE3000 KE3000 ,AL3000, AH3000 1 to 95: GT120 For the setting other than the above, error (dedicated device is out of range) will occur.
101	GD11	
102	GD12	
103	GD13	
104	GD14	
105	GD15	
106	GD16	
107	GD17	
108	GD18	
109	GD19	
110	GD20	
111	GD21	
112	GD22	
113	GD23	
114	GD24	
115	GD25	

(3) All station specification

Target station differs depending on write-in operation or read-out operation.

- For write-in operation, all station will be a target.
- For read-out operation, only one station will be a target.
- All station specification is not available for KE3000. Do not use the all station specification for systems which include KE3000.

40.6 Device Range that Can Be Set

For details on the device range of controllers that can be used on GT14 Handy, refer to the following manuals.

☞ GT Designer3 Version1 Screen Design Manual (Fundamentals)

☞ GOT1000 Series Connection Manual (Non-Mitsubishi Products 1) for GT Works3

40.7 Precautions

■ Station number settings of temperature controller

In the system configuration, the controller with the station number set with the host address must be included.
For details of host address setting, refer to the following.

☞ 40.4.1 Setting communication interface (Communication settings)

■ GOT clock control

Since the controller does not have a clock function, the settings of [time adjusting] or [time broad cast] by GOT clock control will be disabled.

■ Cutting the portion of multiple connection of the controller

By setting GOT internal device, GOT can cut the portion of multiple connection of the controller. For example, faulty station that has communication timeout can be cut from the system.
For details of the setting contents of GOT internal device, refer to the following manual.

☞ GT Designer3 Version1 Screen Design Manual

41. CONNECTION TO TOSHIBA PLC

41.1 Connectable Model List

The following table shows the connectable models.

Series	Model	Clock	Communication type	GT14 Handy	Refer to
PROSEC T Series	T2(PU224)	○	RS-422	○	41.2.1
	T3	○			
	T3H	○			
	T2E	○	RS-232 RS-422	○	
	T2N	○	RS-232 RS-422	○	
PROSEC V Series	model 2000(S2)	○	RS-422	○	41.2.2
	model 2000(S2T)	○			
	model 2000(S2E)	○			
	model 3000(S3)	○	RS-422	○	
Unified Controller nv Series	Controller type1 PU811	○	Ethernet	○	41.3.1

41.2 Serial Connection

41.2.1 System configuration for connecting to PROSEC T Series

Communication driver
TOSHIBA PROSEC T/V

(1) When using the connector conversion box

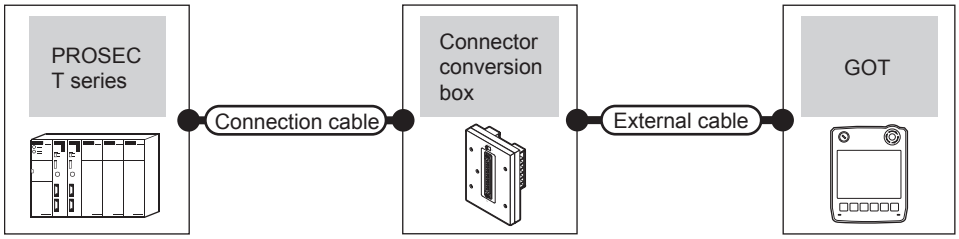

PLC		Connection cable	Connector conversion box	External cable	GOT model	Total distance	Number of connectable equipment
Model	Communication type	Cable model Connection diagram number					
T2(PU224) T3 T3H	RS-422	GT09-C30R40501-15P(3m) GT09-C100R40501-15P(10m) or User preparing RS422 connection diagram 1)	GT11H-CNB-37S	GT11H-C30-37P(3m) GT11H-C60-37P(6m) GT11H-C100-37P(10m)	GT14 Handy	13m	1 GOT for 1 PLC
T2E	RS-232	GT09-C30R20501-9P(3m) or User preparing RS232 connection diagram 1)	GT11H-CNB-37S	GT11H-C30-37P(3m)	GT14 Handy	6m	
	RS-422	GT09-C30R40502-6C(3m) GT09-C100R40502-6C(10m) or User preparing RS422 connection diagram 4)	GT11H-CNB-37S	GT11H-C30-37P(3m) GT11H-C60-37P(6m) GT11H-C100-37P(10m)	GT14 Handy	13m	
T2N	RS-232	GT09-C30R20502-15P(3m) or User preparing RS232 connection diagram 4)	GT11H-CNB-37S	GT11H-C30-37P(3m)	GT14 Handy	6m	
	RS-422	GT09-C30R40503-15P(3m) GT09-C100R40503-15P(10m) or User preparing RS422 connection diagram 7)	GT11H-CNB-37S	GT11H-C30-37P(3m) GT11H-C60-37P(6m) GT11H-C100-37P(10m)	GT14 Handy	13m	

(2) When using the external cable (GT11H-C□□□-37P)

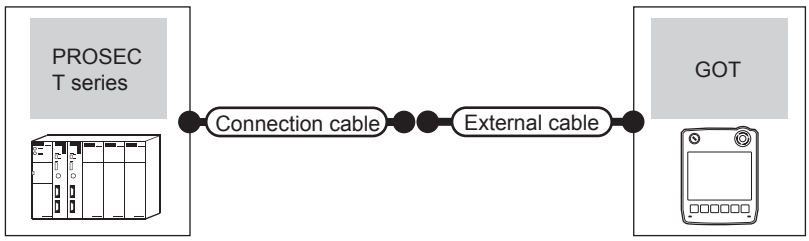

PLC		Connection cable	External cable	GOT model	Total distance	Number of connectable equipment
Model	Communication type	Cable model Connection diagram number				
T2(PU224) T3 T3H	RS-422	User preparing RS422 connection diagram 2)	GT11H-C30-37P(3m) GT11H-C60-37P(6m) GT11H-C100-37P(10m)	GT14 Handy	13m	1 GOT for 1 PLC
T2E	RS-232	User preparing RS232 connection diagram 2)	GT11H-C30-37P(3m)	GT14 Handy	6m	
	RS-422	User preparing RS422 connection diagram 5)	GT11H-C30-37P(3m) GT11H-C60-37P(6m) GT11H-C100-37P(10m)	GT14 Handy	13m	
T2N	RS-232	User preparing RS232 connection diagram 5)	GT11H-C30-37P(3m)	GT14 Handy	6m	
	RS-422	User preparing RS422 connection diagram 8)	GT11H-C30-37P(3m) GT11H-C60-37P(6m) GT11H-C100-37P(10m)	GT14 Handy	13m	

(3) When using the external cable (GT11H-C□□□)

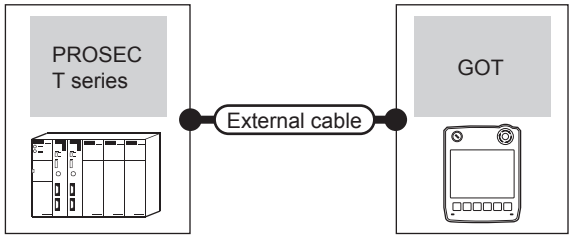

PLC		External cable	GOT model	Total distance	Number of connectable equipment
Model	Communication type				
T2(PU224) T3 T3H	RS-422	GT11H-C30(3m) GT11H-C60(6m) GT11H-C100(10m) User preparing RS422 connection diagram 3)	GT14 Handy	13m	1 GOT for 1 PLC
T2E	RS-232	GT11H-C30(3m) GT11H-C60(6m) User preparing RS232 connection diagram 3)	GT14 Handy	6m	
	RS-422	GT11H-C30(3m) GT11H-C60(6m) GT11H-C100(10m) User preparing RS422 connection diagram 6)	GT14 Handy	13m	
T2N	RS-232	GT11H-C30(3m) GT11H-C60(6m) User preparing RS232 connection diagram 6)	GT14 Handy	6m	
	RS-422	GT11H-C30(3m) GT11H-C60(6m) GT11H-C100(10m) User preparing RS422 connection diagram 9)	GT14 Handy	13m	

41.2.2 System configuration for connecting to PROSEC V Series

Communication driver
TOSHIBA PROSEC T/V

(1) When using the connector conversion box

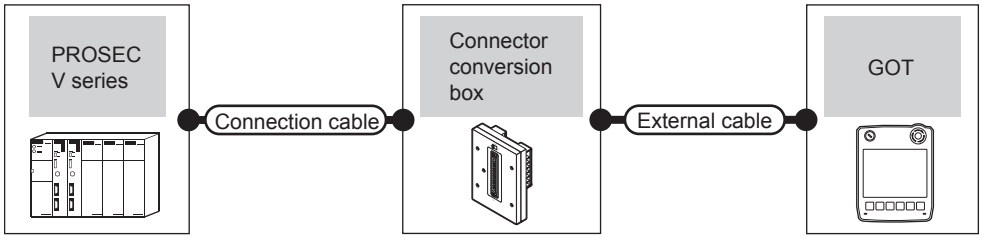

PLC		Connection cable	Connector conversion box	External cable	GOT model	Total distance	Number of connectable equipment
Model	Communication type	Cable model Connection diagram number					
model 2000 (S2, S2T, S2E)	RS-422	GT09-C30R40502-6C(3m) GT09-C100R40502-6C(10m) or User preparing RS422 connection diagram 4)	GT11H-CNB-37S	GT11H-C30-37P(3m) GT11H-C60-37P(6m) GT11H-C100-37P(10m)	GT14 Handy	13m	1 GOT for 1 PLC
model 3000 (S3)	RS-422	GT09-C30R40501-15P(3m) GT09-C100R40501-15P(10m) or User preparing RS422 connection diagram 1)			GT14 Handy	13m	

(2) When using the external cable (GT11H-C□□□-37P)

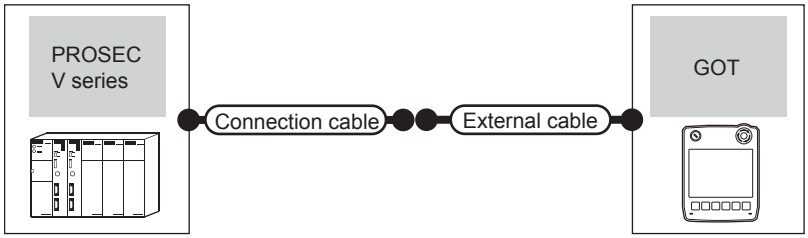

PLC		Connection cable	External cable	GOT model	Total distance	Number of connectable equipment
Model	Communication type	Cable model Connection diagram number				
model 2000 (S2, S2T, S2E)	RS-422	User preparing RS422 connection diagram 5)	GT11H-C30-37P(3m) GT11H-C60-37P(6m) GT11H-C100-37P(10m)	GT14 Handy	13m	1 GOT for 1 PLC
model 3000 (S3)	RS-422	User preparing RS422 connection diagram 5)	GT11H-C30-37P(3m) GT11H-C60-37P(6m) GT11H-C100-37P(10m)	GT14 Handy	13m	

(3) When using the external cable (GT11H-C□□□)

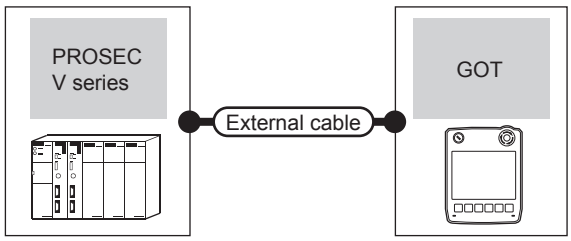

PLC		External cable	GOT model	Total distance	Number of connectable equipment
Model	Communication type				
model 2000 (S2, S2T, S2E)	RS-422	GT11H-C30(3m) GT11H-C60(6m) GT11H-C100(10m) User preparing RS422 connection diagram 6)	GT14 Handy	13m	1 GOT for 1 PLC
model 3000 (S3)	RS-422	GT11H-C30(3m) GT11H-C60(6m) GT11H-C100(10m) User preparing RS422 connection diagram 3)	GT14 Handy	13m	

41.2.3 Connection diagram

The following diagram shows the connection between the GOT and the PLC.

■ RS-232 cable

(1) Connection diagram

RS232 connection diagram 1)

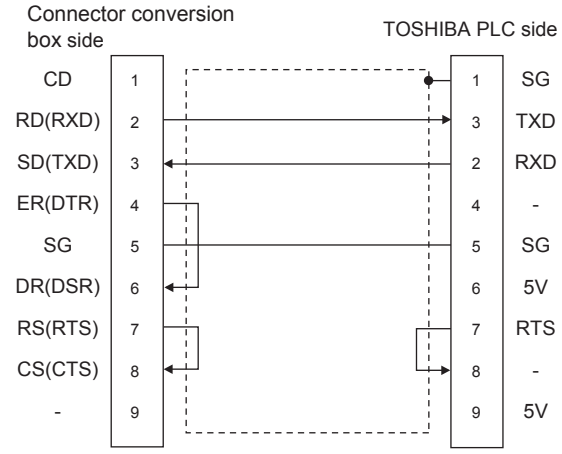

RS232 connection diagram 2)

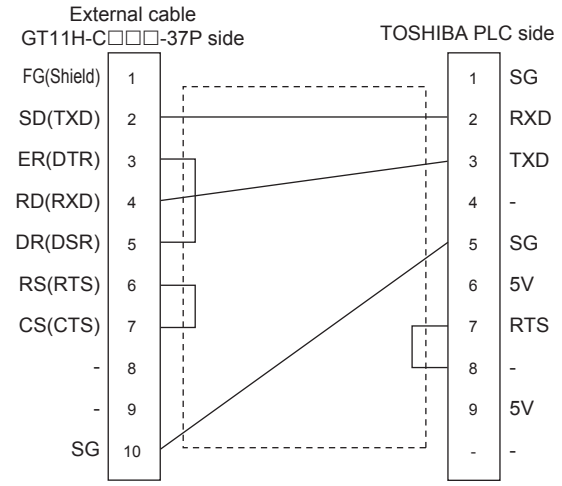

RS232 connection diagram 3)

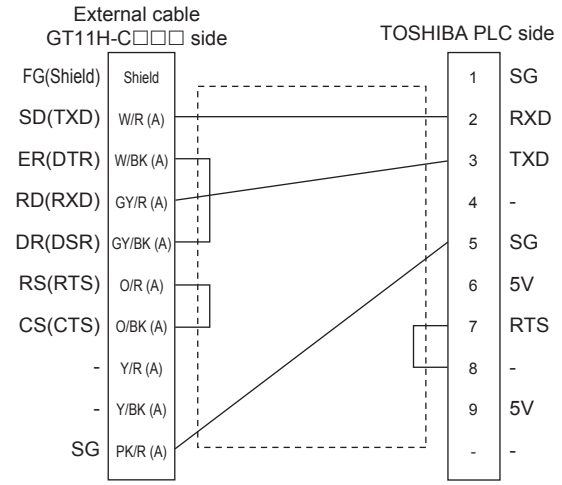

RS232 connection diagram 4)

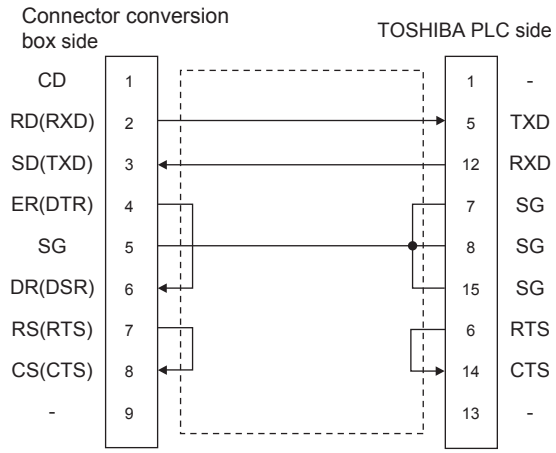

RS232 connection diagram 5)

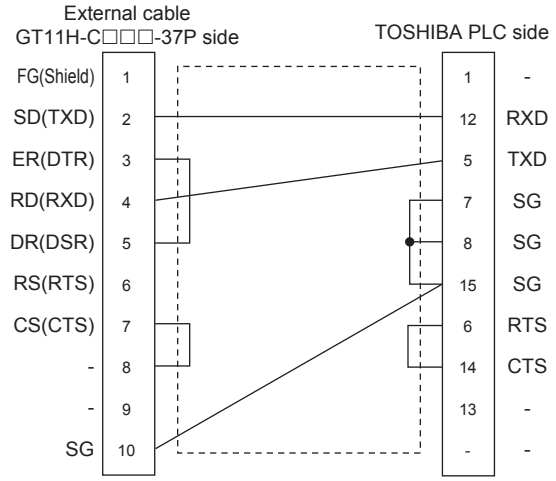

RS232 connection diagram 6)

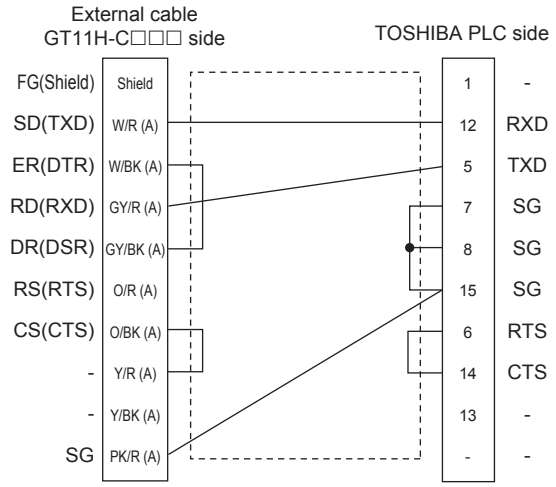

(2) Precautions when preparing a cable

(a) Cable length
The total distance (between the GOT and a controller) of RS-232 cable must be 6m or less.

(b) Connector conversion box side connector
For the connector conversion box side connector, refer to the following.

☞ 6.6 Connector Conversion Box

(c) External cable side connector
For the connector specifications of the external cable side, refer to the following.

☞ 8.2 External Cable, Relay Cable

(d) TOSHIBA PLC side connector
Use the connector compatible with the TOSHIBA PLC.
For details, refer to the TOSHIBA PLC user's manual.

■ RS-422 cable

(1) Connection diagram

RS422 connection diagram 1)

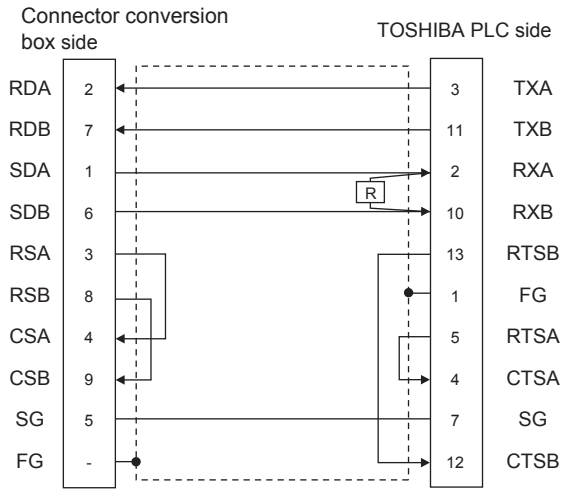

RS422 connection diagram 2)

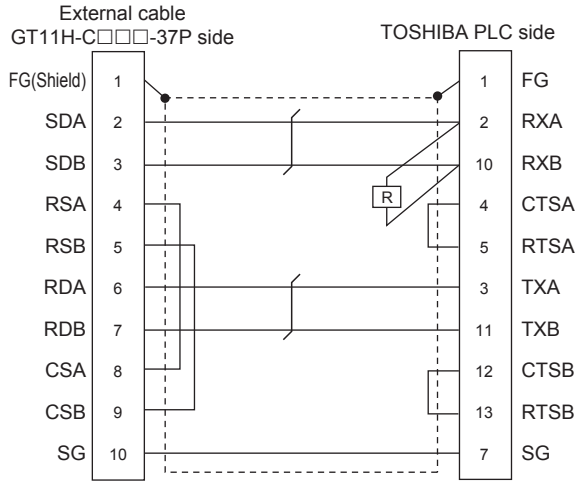

RS422 connection diagram 3)

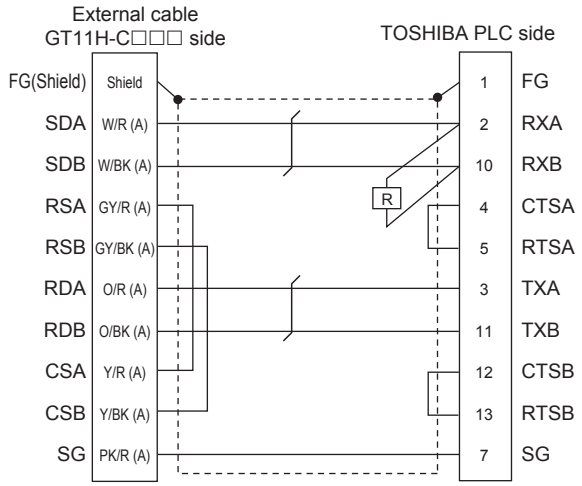

RS422 connection diagram 4)

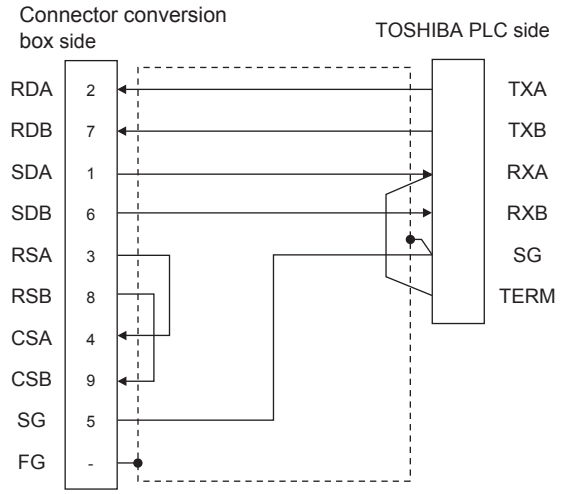

RS422 connection diagram 5)

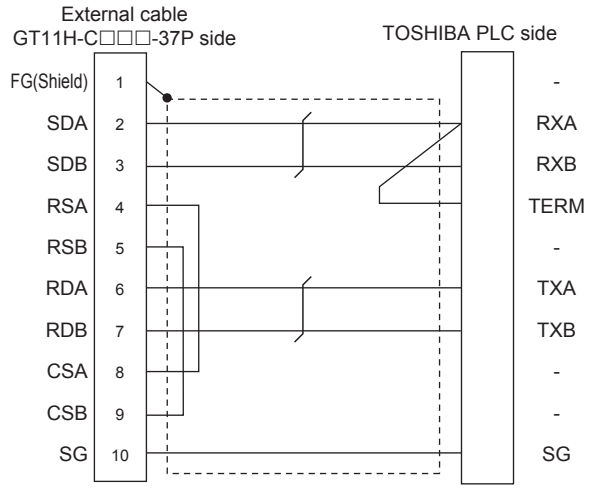

RS422 connection diagram 6)

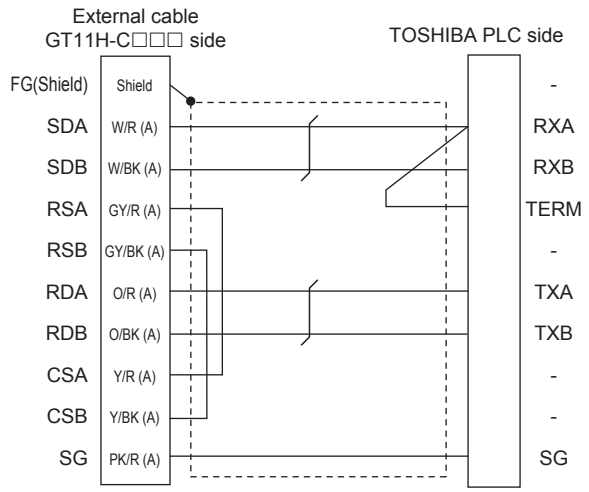

RS422 connection diagram 7)

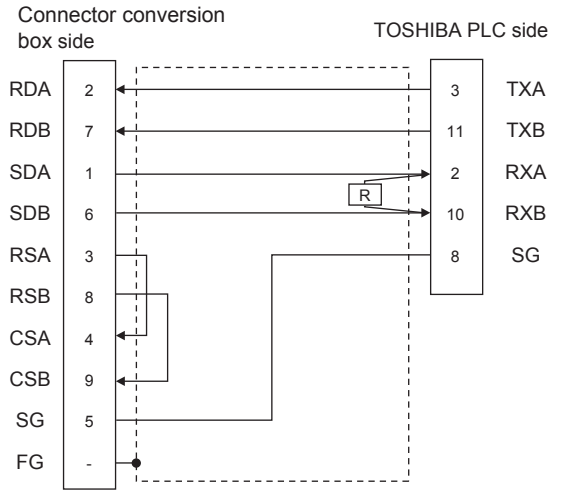

RS422 connection diagram 8)

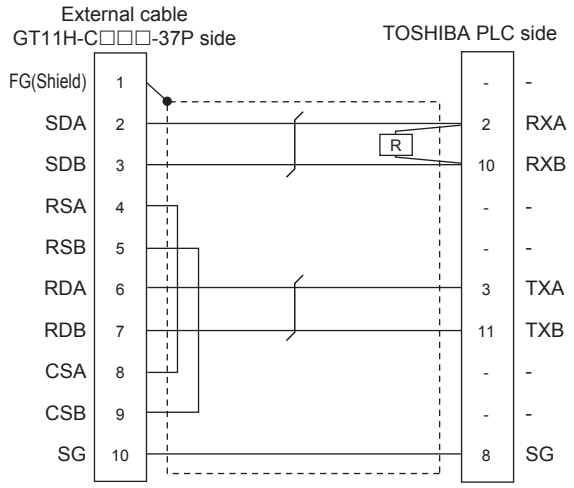

RS422 connection diagram 9)

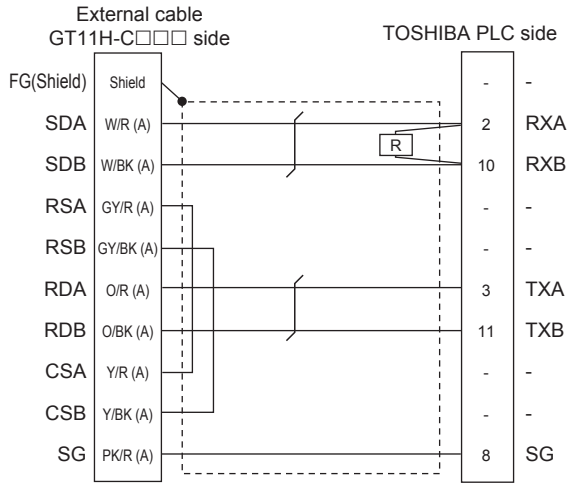

(2) Precautions when preparing a cable

(a) Cable length
The total distance (between GOT and controllers) of RS-422 cable must be 13m or less.

(b) Connector conversion box side connector
For the connector conversion box side connector, refer to the following.

☞ 6.6 Connector Conversion Box

(c) External cable side connector
For the connector specifications of the external cable side, refer to the following.

☞ 8.2 External Cable, Relay Cable

(d) TOSHIBA PLC side connector
Use the connector compatible with the TOSHIBA PLC.
For details, refer to the TOSHIBA PLC user's manual.

(3) Connecting terminating resistors

(a) TOSHIBA PLC side
When connecting a TOSHIBA PLC to a GOT, a terminating resistor must be set to the TOSHIBA PLC.
For the setting of the terminating resistor, refer to the following manual.

☞ TOSHIBA PLC user's Manual

- T2 (PU224), T2N, T3, T3H, model 3000 (S3)
  Connect the terminating resistor (1/2W-120Ω) across RXA and RXB.
- T2E, model 2000 (S2, S2T, S2E)
  Short across the RXA and TERM terminals.

41.2.4 GOT side settings

■ Setting communication interface (Communication settings)

Set the channel of the equipment connected to the GOT.

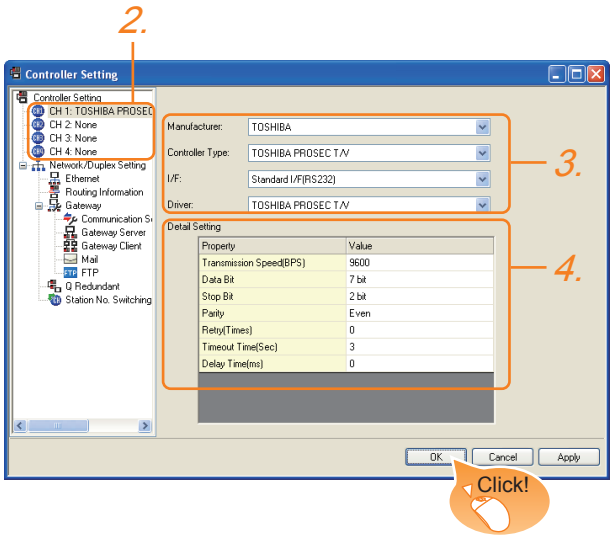

1. Select [Common] → [Controller Setting] from the menu.
2. The Controller Setting window is displayed. Select the channel to be used from the list menu.
3. Set the following items.
   - Manufacturer: TOSHIBA
   - Controller Type: TOSHIBA PROSEC T/V
   - I/F: Interface to be used
   - Driver: TOSHIBA PROSEC T/V
4. The detailed setting is displayed after Manufacturer, Controller Type, I/F, and Driver are set.
   Make the settings according to the usage environment.
   41.2.4 ■ Communication detail settings

Click the OK button when settings are completed.

POINT

The settings of connecting equipment can be confirmed in [I/F Communication Setting].
For details, refer to the following.
18.1.2 I/F communication setting

■ Communication detail settings

Make the settings according to the usage environment.

Item	Description	Range
Transmission Speed	Set this item when change the transmission speed used for communication with the connected equipment. (Default: 9600bps)	4800bps, 9600bps, 19200bps, 38400bps, 57600bps, 115200bps
Data Bit	Set this item when change the data length used for communication with the connected equipment. (Default: 7bit)	7bit, 8bit
Stop Bit	Specify the stop bit length for communications. (Default: 2bit)	1bit, 2bit
Parity	Specify whether or not to perform a parity check, and how it is performed during communication. (Default: Even)	None Even Odd
Retry	Set the number of retries to be performed when a communication error occurs. (Default: 0time)	0 to 5times
Timeout Time	Set the time period for a communication to time out. (Default: 3sec)	3 to 30sec
Delay Time	Set this item to adjust the transmission timing of the communication request from the GOT. (Default: 0ms)	0 to 300 (ms)

POINT

(1) Communication interface setting by Utility
The communication interface setting can be changed on the Utility's [Communication setting] after writing [Communication Settings] of project data.
For details on the Utility, refer to the following manual.
11. COMMUNICATION INTERFACE SETTING (COMMUNICATION SETTING)

(2) Precedence in communication settings
When settings are made by GT Designer3 or the Utility, the latest setting is effective.

POINT

TOSHIBA PLC

For details of the TOSHIBA PLC, refer to the following manual.

☞ TOSHIBA PLC user's Manual

■ Connecting to T2 (PU224), T2E or T2N

(1) By switch

Set the switches accordingly.

(a) mode setting switch

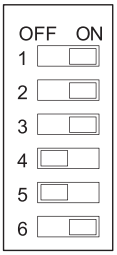

Switch No.	Setting	Settings
4	OFF (fixed)	Computer link
5	OFF (fixed)	

(b) DIP switch on module PCB (T2N only)

Switch No.	Set value	
	For RS-232 communication	For RS-422 communication
DIP switch: No. 1	ON (RS-232C)	OFF (RS-485*1)

*1 Can be used as RS-422.

(2) Transmission parameter setting

Enter the transmission parameters.

Item	Set value
Transmission speed*1*2*3	4800bps, 9600bps, 19200bps
Data Bit	7bit
Stop Bit	2bit
Parity bit	Even
Station No.	1

*1 Indicates only the transmission speeds that can be set on the GOT side.
*2 Fixed to 9600bps for T2E only.
*3 Set the same transmission speed as that of the GOT side.

■ Connecting to T3 or T3H

Enter the transmission parameters.

Item	Set value
Transmission speed*1*2	4800bps, 9600bps, 19200bps
Data Bit	7bit
Stop Bit	2bit
Parity bit	Even
Station No.	1

*1 Indicates only the transmission speeds that can be set on the GOT side.
*2 Set the same transmission speed as that of the GOT side.

■ Connecting to model 2000 (S2, S2T, S2E), model 3000 (S3)

Enter the transmission parameters.

Item	Set value
Transmission method	RS485*1
RS485	COM1
Timeout Time	5sec
Transmission speed*2*3	4800bps, 9600bps, 19200bps
Data Bit	7bit
Stop Bit	2bit
Parity bit	Even
Station No.	1

*1 Can be used as RS-422.
*2 Indicates only the transmission speeds that can be set on the GOT side.
*3 Set the same transmission speed as that of the GOT side.

41.3 Ethernet Connection

41.3.1 Connecting to Unified Controller nv Series

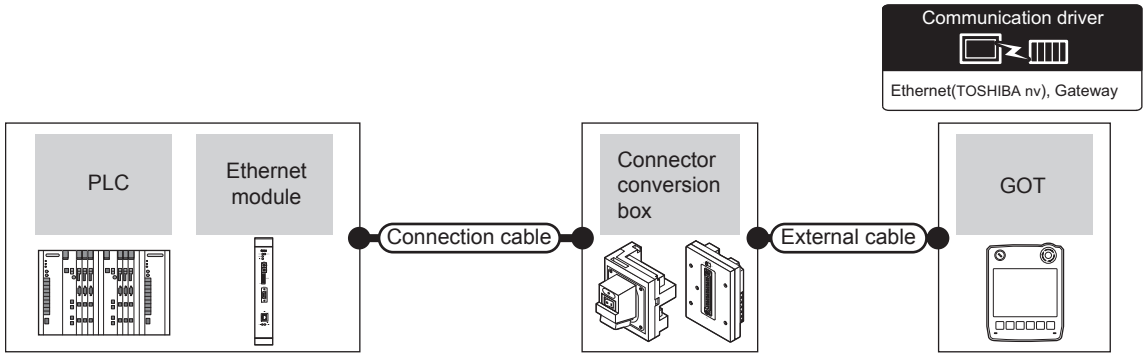

PLC		Connection cable*1	Connector conversion box	External cable*5	GOT model	Maximum segment length	Number of connectable equipment
Series	Ethernet module*3	Cable model					
Unified Controller nv Series	EN811	• 10BASE-T Shielded twisted pair cable (STP) or Unshielded twisted pair cable (UTP): Category 3, 4, and 5 • 100BASE-TX Shielded twisted pair cable (STP): Category 5 and 5e	GT16H-CNB-42S	GT14H-C30-42P (3m) GT14H-C60-42P (6m) GT14H-C100-42P (10m)	GT14 Handy	100m*2	When PLC: GOT is N:1 The number of PLCs for 1 GOT: 32 or less When PLC: GOT is 1:N The number of GOTs for 1 PLC: No limit number*4
			GT16H-CNB-37S	GT11H-C30-37P (3m) GT11H-C60-37P (6m) GT11H-C100-37P (10m)			

*1 The destination connected with the twisted pair cable varies with the configuration of the applicable Ethernet network system. Connect to the Ethernet module, hub, transceiver or other system equipment corresponding to the applicable Ethernet network system.
Use cables, connectors, and hubs that meet the IEEE802.3 10BASE-T/100BASE-TX standard.

*2 A length between a hub and a node.
The maximum distance differs depending on the Ethernet device to be used.
The following shows the number of the connectable nodes when a repeater hub is used.
- 10BASE-T: Max. 4 nodes for a cascade connection (500m)
- 100BASE-TX: Max. 2 nodes for a cascade connection (205m)

When switching hubs are used, the cascade connection between the switching hubs has no logical limit for the number of cascades.
For the limit, contact the switching hub manufacturer.

*3 Product manufactured by TOSHIBA Corporation. For details of this product, contact TOSHIBA Corporation.

*4 There is no restriction for the number of GOTs. However, if the number of GOTs increases, the communication becomes high-loaded, and it may affect the communication performance.

*5 Use C or later version of GT11H-C□□-37P.

41.3.2 GOT side settings

■ Setting communication interface (Communication settings)

Set the channel of the connected equipment.

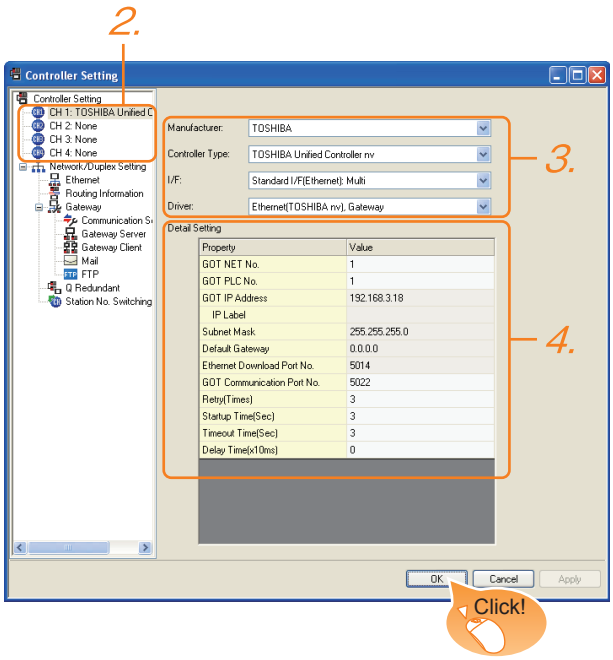

1. Select [Common] → [Controller Setting] from the menu.
2. The Controller Setting window is displayed. Select the channel to be used from the list menu.
3. Set the following items.
   - Manufacturer: TOSHIBA
   - Controller Type: TOSHIBA Unified Controller nv
   - I/F: Interface to be used
   - Driver: Ethernet (TOSHIBA nv), Gateway
4. The detailed setting is displayed after Manufacturer, Controller Type, I/F, and Driver are set. Make the settings according to the usage environment.

41.3.2 ■ Communication detail settings

Click the OK button when settings are completed.

POINT

The settings of connecting equipment can be confirmed in [I/F Communication Setting].
For details, refer to the following.

18.1.2 I/F communication setting

■ Communication detail settings

Make the settings according to the usage environment.

Item	Description	Range
GOT NET No.	Set the network No. of the GOT. (Default: 1)	1 to 239
GOT PLC No.*2	Set the station No. of the GOT. (Default: 1)	1 to 254
GOT IP Address*1	Set the IP address of the GOT. (Default: 192.168.3.18)	0.0.0.0 to 255.255.255.255
Subnet Mask*1	Set the subnet mask for the sub network. (Only for connection via router) If the sub network is not used, the default value is set. (Default: 255.255.255.0)	0.0.0.0 to 255.255.255.255
Default Gateway*1	Set the router address of the default gateway where the GOT is connected. (Only for connection via router) (Default: 0.0.0.0)	0.0.0.0 to 255.255.255.255
Ethernet Download Port No.*1	Set the GOT port No. for Ethernet download. (Default: 5014)	1024 to 5010, 5014 to 65534 (Except for 5011, 5012, 5013, and 49153)
GOT Communication Port No.	Set the GOT port No. for the connection with the Ethernet module. (Default: 5022)	1024 to 5010, 5014 to 65534 (Except for 5011, 5012, 5013, and 49153)
Retry	Set the number of retries to be performed when a communication timeout occurs. When receiving no response after retries, the communication times out. (Default: 3times)	0 to 5times
Startup Time	Specify the time period from the GOT startup until GOT starts the communication with the PLC CPU. (Default: 3sec)	3 to 255sec
Timeout Time	Set the time period for a communication to time out. (Default: 3sec)	3 to 90sec
Delay Time	Set the delay time for reducing the load of the network/destination PLC. (Default: 0ms)	0 to 10000 (× 10 ms)

*1 Click the Setting button and perform the setting in the [GOT IP Address Setting] screen.

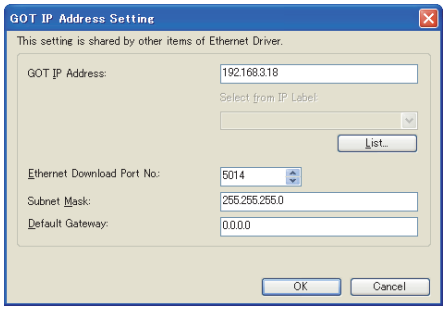

*2 Each of [GOT PLC No.] set in the communication detail setting and [PLC No.] set in the Ethernet setting must be set to different station numbers.

41.3.2 ■ Ethernet setting

■ Ethernet setting

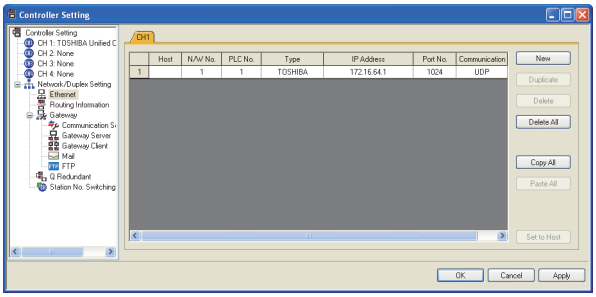

Item	Description	Set value
Host	The host is displayed. (The host is indicated with an asterisk (*).)	-
N/W No.	Set the network No. of the connected Ethernet module. (Default: blank)	1 to 127
PLC No.*1	Set the station No. of the connected Ethernet module. (Default: blank)	1 to 254
Controller Type	TOSHIBA (fixed)	TOSHIBA (fixed)
IP Address	Set the IP address of the connected Ethernet module. (Default: blank)	PLC side IP address
Port No.	Set the port No. of the connected Ethernet module. (Default: 9600)	256 to 65534
Communication	UDP (fixed)	UDP (fixed)

*1 Each of [GOT PLC No.] set in the communication detail setting and [PLC No.] set in the Ethernet setting must be set to different station numbers.

41.3.2 ■ Communication detail settings

POINT

(1) Communication interface setting by Utility
The communication interface setting can be changed on the Utility's [Communication setting] after writing [Communication Settings] of project data.
For details on the Utility, refer to the following manual.

11. COMMUNICATION INTERFACE SETTING (COMMUNICATION SETTING)

(2) Precedence in communication settings
When settings are made by GT Designer3 or the Utility, the latest setting is effective.

41.3.3 PLC side setting

■ Setting of operation mode switch and station address switch

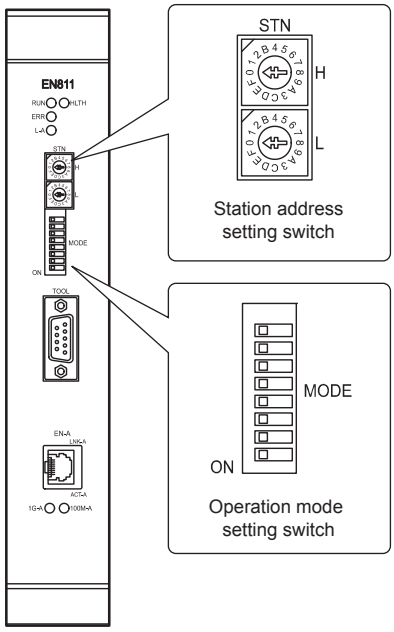

(1) Station number switch
The station address setting switches are hexadecimal rotary switches that determine the station address on the Ethernet network.
Set the station address (1 to 254) that has been assigned upon system configuration in a HEX code.
Assign an address with a different value to each of the nodes in the system.
Set as follows.

Switch name	Settings	Setting range
STN-H	Upper address: 0 to F (Hex)	01 to FE (Hex)
STN-L	Lower address: 0 to F (Hex)	

(2) Operation mode setting switch

Setting item	Set value	Switch No. 1	2	3	6	7	8
Operation mode	Nomal use	OFF	OFF	OFF			
	Cannot be used	ON	OFF	OFF			
		OFF	ON	OFF			
IP address type	Class B 172.16.64.XX*1				OFF	OFF	OFF
	Reserved				OFF	ON	OFF
	Class C 192.168.0.XX*2				OFF	OFF	ON
	Tool setting*3				ON	ON	ON

*1 XX indicates the value of the station address setting switch.
Subnet mask: 255.255.192.0

*2 XX indicates the value of the station address setting switch.
Subnet mask: 255.255.255.0

*3 It can be set freely from the engineering tool for the Unified Controller nv Series, and the value has precedence over the value of the station address setting switches.

41.3.4 Precautions

■ Delay of device communication

Note that if a non-existent station, or a station which power is turned OFF is monitored, the communication of normal stations is also delayed.

■ Redundant system

When configuring a redundant system, the "Multicast address setting" for the configured PLC pair (System A: Primary, System B: Secondary) is required.

41.4 Device Range that Can Be Set

For details on the device range of controllers that can be used on GT14 Handy, refer to the following manuals.

☞ GT Designer3 Version1 Screen Design Manual (Fundamentals)

☞ GOT1000 Series Connection Manual (Non-Mitsubishi Products 1) for GT Works3

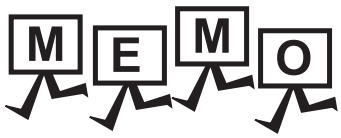
MEMO

42. CONNECTION TO TOSHIBA MACHINE PLC

42.1 Connectable Model List

The following table shows the connectable models.

Series	Model	Clock	Communication type	GT14 Handy	Refer to
TCmini Series*1	TC3-01	○	RS-232	○	42.2.1
	TC3-02	○			
	TC6-00	○			
	TC8-00	○			
Robot controller	TS2000	×	RS-232	○	42.2.2
	TS2100	×			

*1 Connectable to the products only, which have RS-232 communication function.

42.2 System Configuration

42.2.1 Connecting to TC3, TC6, TC8

Communication driver
TOSHIBA MACHINE TCmini

(1) When using the connector conversion box

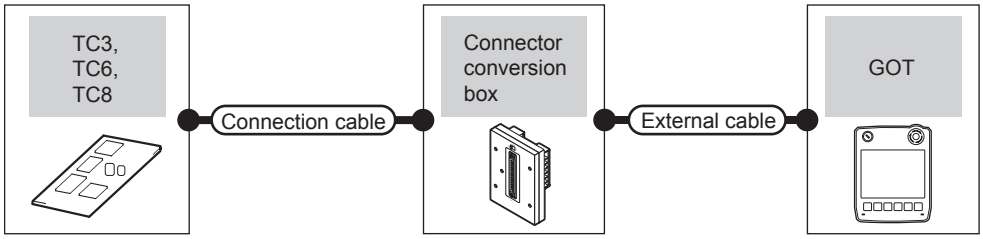

PLC		Connection cable	Connector conversion box	External cable	GOT model	Total distance	Number of connectable equipment
Model	Communication type	Cable model Connection diagram number					
TC3, TC6, TC8	RS-232	User preparing RS232 connection diagram 1)	GT11H-CNB-37S	GT11H-C30-37P(3m)	GT14 Handy	6m	1 GOT for 1 PLC

(2) When using the external cable (GT11H-C□□□-37P)

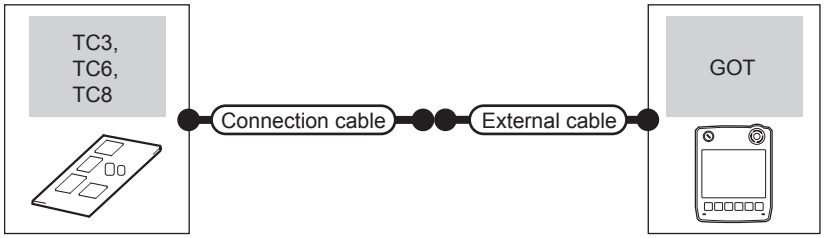

PLC		Connection cable	External cable	GOT model	Total distance	Number of connectable equipment
Model	Communication type	Cable model Connection diagram number				
TC3, TC6, TC8	RS-232	User preparing RS232 connection diagram 2)	GT11H-C30-37P(3m)	GT14 Handy	6m	1 GOT for 1 PLC

(3) When using the external cable (GT11H-C□□□)

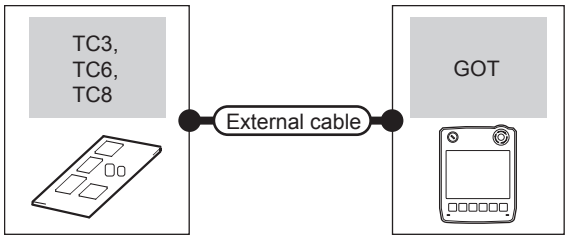

PLC		External cable	GOT model	Total distance	Number of connectable equipment
Model	Communication type				
TC3, TC6, TC8	RS-232	GT11H-C30(3m) GT11H-C60(6m) User preparing RS232 connection diagram 3)	GT14 Handy	6m	1 GOT for 1 PLC

42.2.2 Connecting to TS2000, TS2100

Communication driver
TOSHIBA MACHINE TCmini

(1) When using the connector conversion box

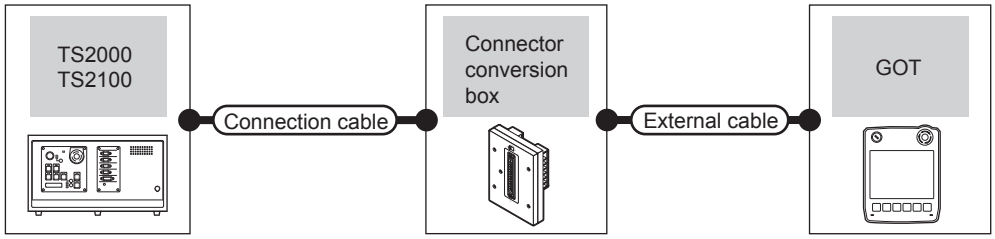

Robot controller		Connection cable	Connector conversion box	External cable	GOT model	Total distance	Number of connectable equipment
Model	Communication type	Cable model Connection diagram number					
TS2000 TS2100 (POD port)	RS-232	User preparing RS232 connection diagram 4)	GT11H-CNB-37S	GT11H-C30-37P(3m)	GT14 Handy	6m	1 GOT for 1 robot controller

(2) When using the external cable (GT11H-C□□□-37P)

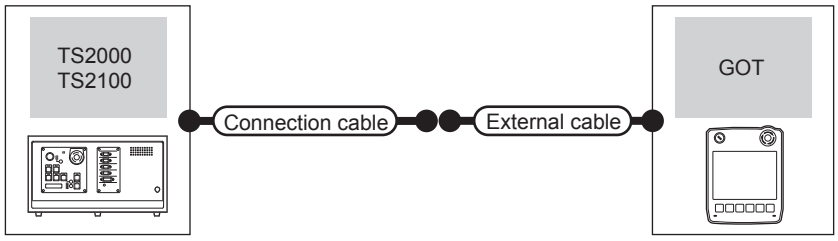

Robot controller		Connection cable	External cable	GOT model	Total distance	Number of connectable equipment
Model	Communication type	Cable model Connection diagram number				
TS2000 TS2100 (POD port)	RS-232	User preparing RS232 connection diagram 5)	GT11H-C30-37P(3m)	GT14 Handy	6m	1 GOT for 1 robot controller

(3) When using the external cable (GT11H-C□□□)

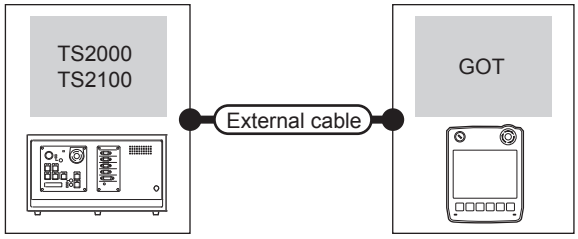

Robot controller		External cable	GOT model	Total distance	Number of connectable equipment
Model	Communication type				
TS2000 TS2100 (POD port)	RS-232	GT11H-C30(3m) GT11H-C60(6m) User preparing RS232 connection diagram 6)	GT14 Handy	6m	1 GOT for 1 robot controller

42.3 Connection Diagram

The following diagram shows the connection between the GOT and the PLC.

42.3.1 RS-232 cable

■ Connection diagram

RS232 connection diagram 1)

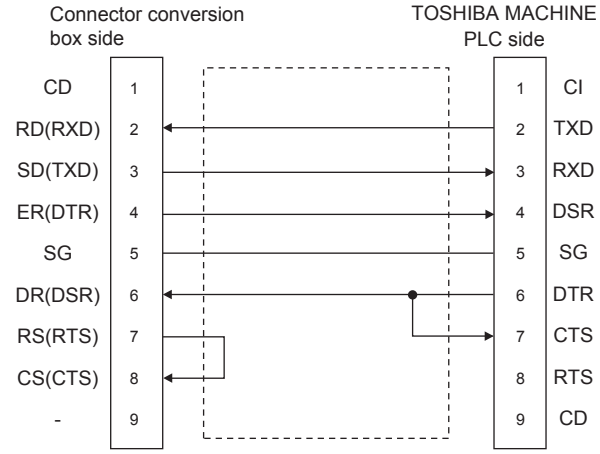

RS232 connection diagram 2)

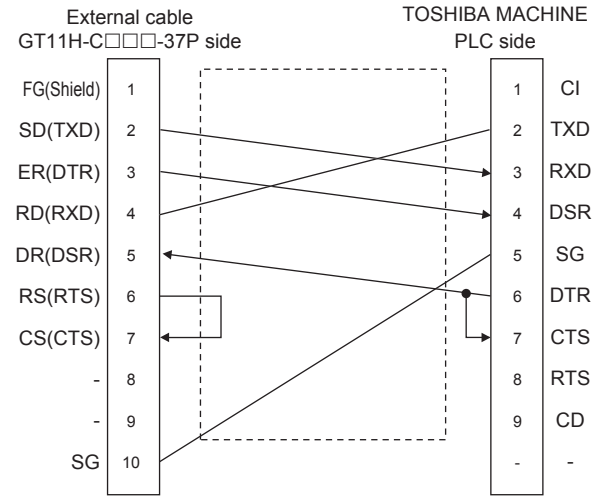

RS232 connection diagram 3)

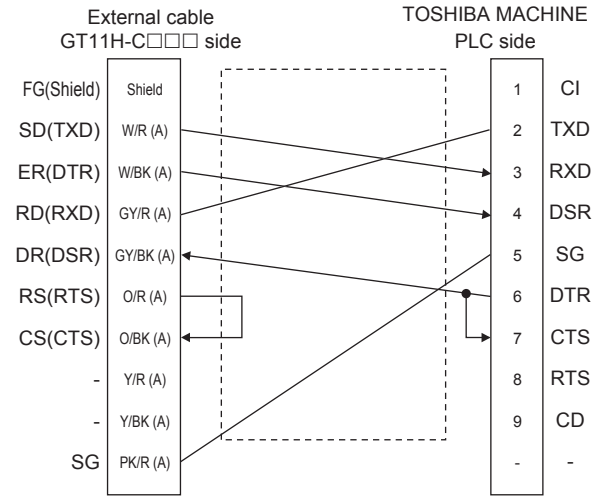

RS232 connection diagram 4)

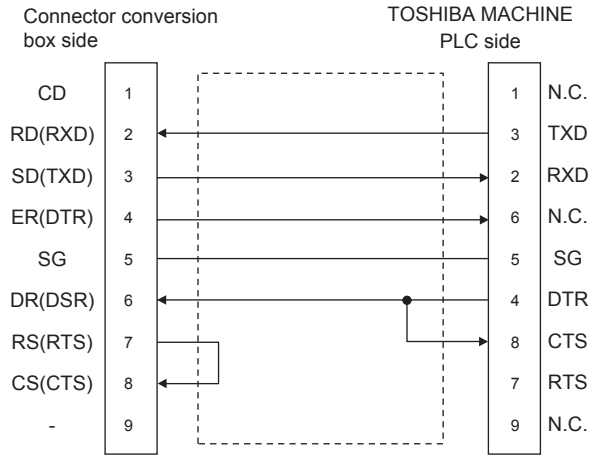

RS232 connection diagram 5)

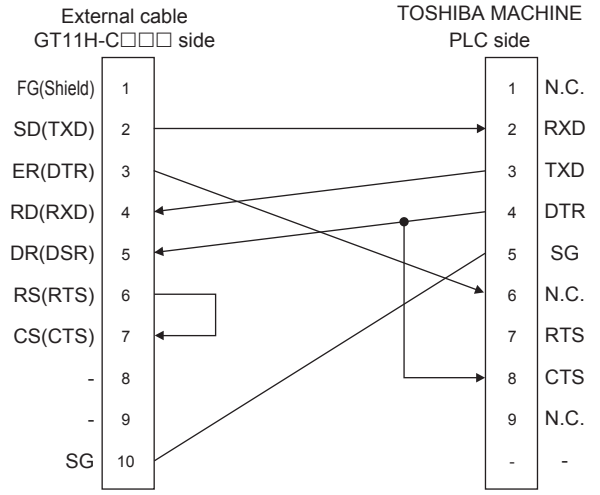

RS232 connection diagram 6)

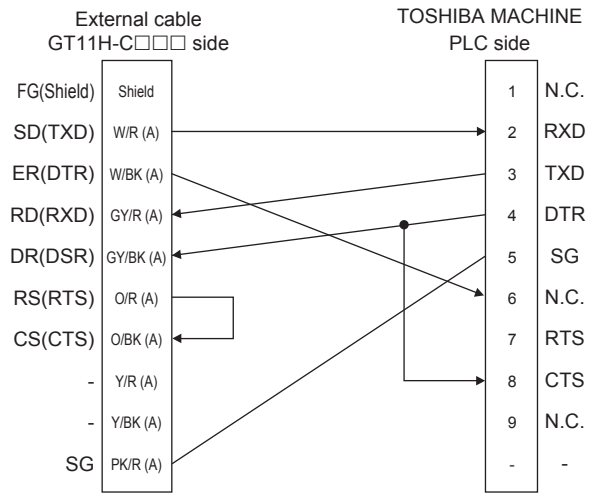

■ Precautions when preparing a cable

(1) Cable length
The total distance (between the GOT and a controller) of RS-232 cable must be 6m or less.

(2) Connector conversion box side connector
For the connector conversion box side connector, refer to the following.

☞ 6.6 Connector Conversion Box

(3) External cable side connector
For the connector specifications of the external cable side, refer to the following.

☞ 8.2 External Cable, Relay Cable

(4) TOSHIBA MACHINE PLC side connector
Use the connector compatible with the TOSHIBA MACHINE PLC side module.
For details, refer to the TOSHIBA MACHINE PLC user's manual.

42.4 GOT Side Settings

42.4.1 Setting communication interface (Communication settings)

Set the channel of the equipment connected to the GOT.

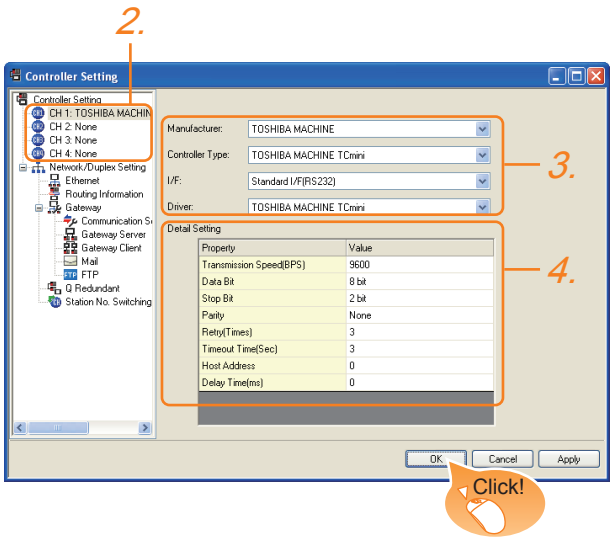

1. Select [Common] → [Controller Setting] from the menu.

2. The Controller Setting window is displayed. Select the channel to be used from the list menu.

3. Set the following items.
   - Manufacturer: TOSHIBA MACHINE
   - Controller Type: TOSHIBA MACHINE TCmini
   - I/F: Interface to be used
   - Driver: TOSHIBA MACHINE TCmini

4. The detailed setting is displayed after Manufacturer, Controller Type, I/F, and Driver are set.
   Make the settings according to the usage environment.
   42.4.2 Communication detail settings

Click the OK button when settings are completed.

POINT

The settings of connecting equipment can be confirmed in [I/F Communication Setting].
For details, refer to the following.
18.1.2 I/F communication setting

42.4.2 Communication detail settings

Make the settings according to the usage environment.

Item	Description	Range
Transmission Speed	Set this item when change the transmission speed used for communication with the connected equipment. (Default: 9600bps)	9600bps, 19200bps, 38400bps, 57600bps, 115200bps
Data Bit	Set this item when change the data length used for communication with the connected equipment. (Default: 8bit)	7bit/8bit
Stop Bit	Specify the stop bit length for communications. (Default: 2bit)	1bit/2bit
Parity	Specify whether or not to perform a parity check, and how it is performed during communication. (Default: None)	None Even Odd
Retry	Set the number of retries to be performed when a communication error occurs. (Default: 3times)	0 to 5times
Timeout Time	Set the time period for a communication to time out. (Default: 3sec)	3 to 30sec
Host Address	Specify the host address (station No. of the GOT to which the PLC is connected) in the connected network. (Default: 0)	0 to 63
Delay Time	Set this item to adjust the transmission timing of the communication request from the GOT. (Default: 0ms)	0 to 300 (ms)

POINT

(1) Communication interface setting by Utility
The communication interface setting can be changed on the Utility's [Communication setting] after writing [Communication Settings] of project data.
For details on the Utility, refer to the following manual.
11. COMMUNICATION INTERFACE SETTING (COMMUNICATION SETTING)

(2) Precedence in communication settings
When settings are made by GT Designer3 or the Utility, the latest setting is effective.

42.5 PLC Side Setting

POINT

TOSHIBA MACHINE PLC

For details of the TOSHIBA MACHINE PLC, refer to the following manual.

☞ TOSHIBA MACHINE PLC user's Manual

Model		Refer to
PLC CPU	TC3, TC8	42.5.1
	TC6	42.5.2
Robot controller	TS2000, TS2100	42.5.3

42.5.1 Connecting to TC3, TC8 series

No communication settings.

Communication is available using default value of the PLC.

42.5.2 Connecting to TC6 series

The setting of transmission speed is changeable.

Set the following Special AUX Relay(A) using engineering tool.

The communication may not work properly if the settings are made using the GOT.

Transmission speed*1	Special AUX Relay		
	A158	A159	A15A
9600bps	OFF	OFF	OFF
19200bps	ON	OFF	OFF
38400bps	-	ON	OFF
57600bps	-	OFF	ON
115200bps	-	ON	ON

*1 Set the same transmission speed as that of the GOT side.

42.5.3 Connecting to TS2000, TS2100

No communication settings.

Communication is available using the default value of the robot controller.

42.6 Device Range that Can Be Set

For details on the device range of controllers that can be used on GT14 Handy, refer to the following manuals.

☞ GT Designer3 Version1 Screen Design Manual (Fundamentals)

☞ GOT1000 Series Connection Manual (Non-Mitsubishi Products 1) for GT Works3

43. CONNECTION TO PANASONIC SERVO AMPLIFIER

43.1 Connectable Model List

The following table shows the connectable models.

Series	Clock	Communication type	GT14 Handy	Refer to
MINAS A4	×	RS-232 RS-485	○	43.2.1
MINAS A4F	×			
MINAS A4L	×			
MINAS A5	×			

43.2 System Configuration

43.2.1 Connecting to MINAS A4, MINAS A4F, MINAS A4L, MINAS A5 series

Communication driver

PANASONIC MINAS

(1) When using the connector conversion box

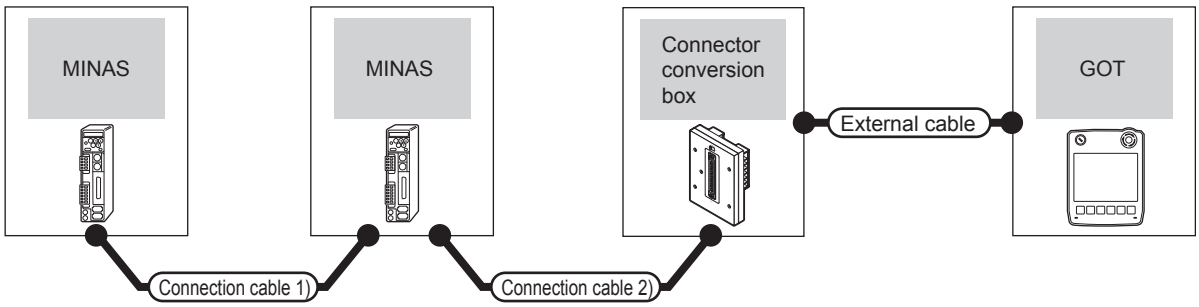

Servo amplifier		Connection cable 1)		Servo amplifier		Connection cable 2)		Connector conversion box	External cable	GOT model	Total distance *2	Number of connectable equipment
Model	Communication type	Cable model*1	Max. distance	Model	Communication type	Cable model Connection diagram number	Max. distance					
MINAS A4 MINAS A4F MINAS A4L	RS-485	DVOP1970(0.2m) DVOP1971(0.5m) DVOP1972(1m)	-	MINAS A4 MINAS A4F MINAS A4L	RS-232	DVOP1960*1 or User preparing RS232 connection diagram 1)	2m	GT11H-CNB-37S	GT11H-C30-37P (3m)	GT14 Handy	17m	16 servo amplifiers for 1 GOT
MINAS A5	RS-485	User preparing RS485 connection diagram 1)	1m	MINAS A5	RS-232	User preparing RS232 connection diagram 4)	2m	GT11H-CNB-37S	GT11H-C30-37P (3m)	GT14 Handy	33m	32 servo amplifiers for 1 GOT

*1 Product manufactured by Panasonic Corporation. For details of this product, contact Panasonic Corporation.

*2 The distance from the GOT to the terminal servo amplifier (Connection cable 1) + Connection cable 2) + External cable)

(2) When using the external cable (GT11H-C□□□-37P)

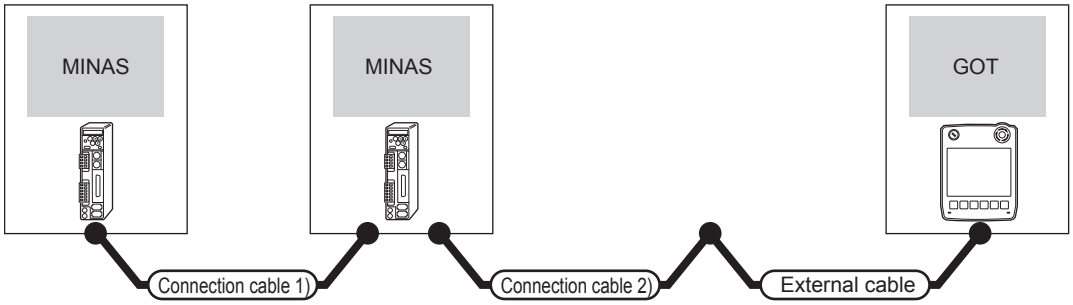

Servo amplifier		Connection cable 1)		Servo amplifier		Connection cable 2)		External cable	GOT model	Total distance *2	Number of connectable equipment
Model	Communication type	Cable model*1	Max. distance	Model	Communication type	Cable model Connection diagram number	Max. distance				
MINAS A4 MINAS A4F MINAS A4L	RS-485	DVOP1970(0.2m) DVOP1971(0.5m) DVOP1972(1m)	-	MINAS A4 MINAS A4F MINAS A4L	RS-232	User preparing RS232 connection diagram 2)	2m	GT11H-C30-37P (3m)	GT14 Handy	17m	16 servo amplifiers for 1 GOT
MINAS A5	RS-485	User preparing RS485 connection diagram 1)	1m	MINAS A5	RS-232	User preparing RS232 connection diagram 5)	2m	GT11H-C30-37P (3m)	GT14 Handy	33m	32 servo amplifiers for 1 GOT

*1 Product manufactured by Panasonic Corporation. For details of this product, contact Panasonic Corporation.

*2 The distance from the GOT to the terminal servo amplifier (Connection cable 1) + Connection cable 2) + External cable)

(3) When using the external cable (GT11H-C□□□)

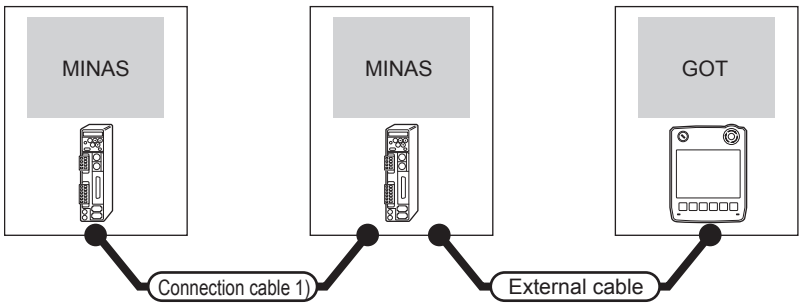

Servo amplifier		Connection cable 1)		Servo amplifier		External cable	GOT model	Total distance *2	Number of connectable equipment
Model	Communication type	Cable model*1	Max. distance	Model	Communication type				
MINAS A4 MINAS A4F MINAS A4L	RS-485	DVOP1970(0.2m) DVOP1971(0.5m) DVOP1972(1m)	-	MINAS A4 MINAS A4F MINAS A4L	RS-232	GT11H-C30(3m) User preparing RS232 connection diagram 3)	GT14 Handy	17m	16 servo amplifiers for 1 GOT
MINAS A5	RS-485	User preparing RS485 connection diagram 1)	1m	MINAS A5	RS-232	GT11H-C30(3m) User preparing RS232 connection diagram 6)	GT14 Handy	33m	32 servo amplifiers for 1 GOT

*1 Product manufactured by Panasonic Corporation. For details of this product, contact Panasonic Corporation.

*2 The distance from the GOT to the terminal servo amplifier (Connection cable 1) + Connection cable 2) + External cable)

43.3 Connection Diagram

The following diagram shows the connection between the GOT and the servo amplifier.

43.3.1 RS-232 cable

■ Connection diagram

RS232 connection diagram 1)

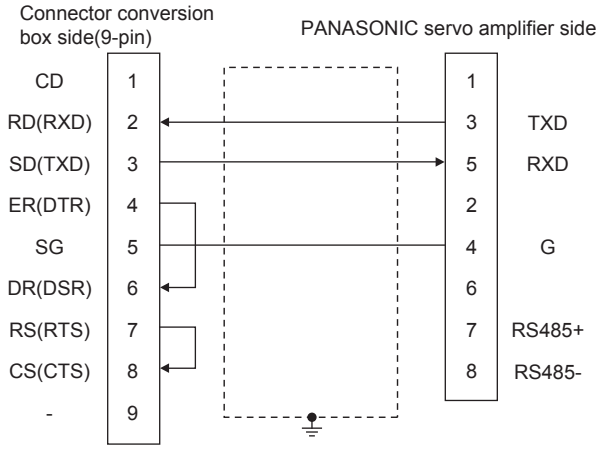

RS232 connection diagram 2)

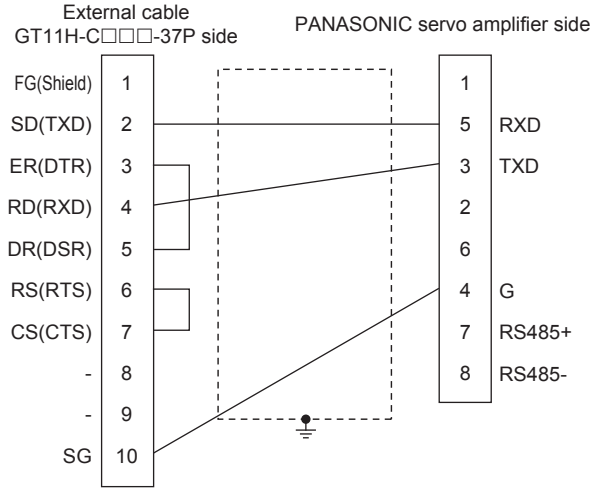

RS232 connection diagram 3)

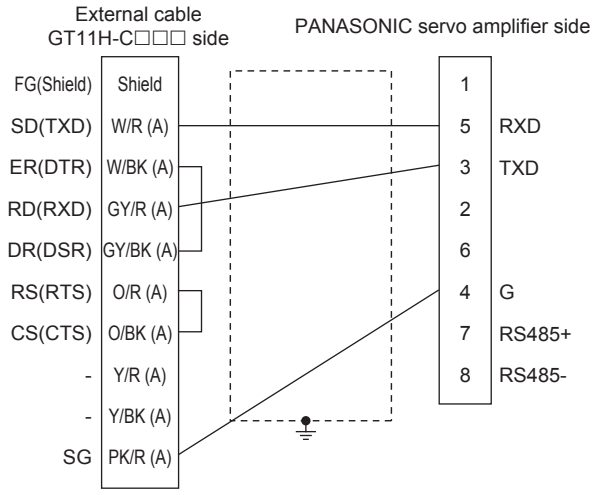

RS232 connection diagram 4)

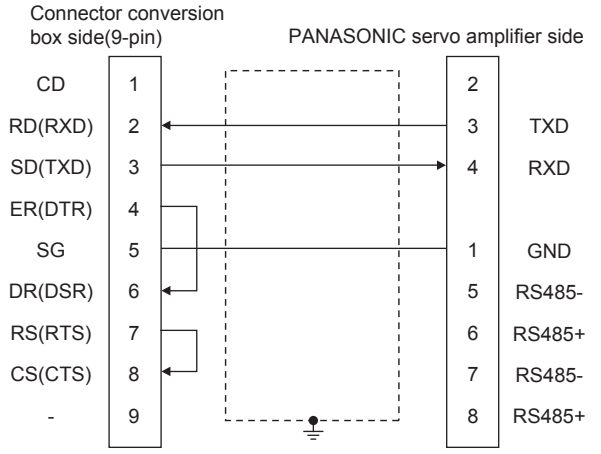

RS232 connection diagram 5)

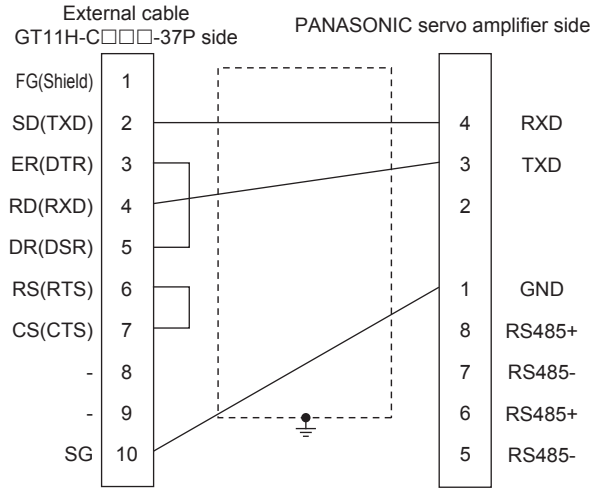

RS232 connection diagram 6)

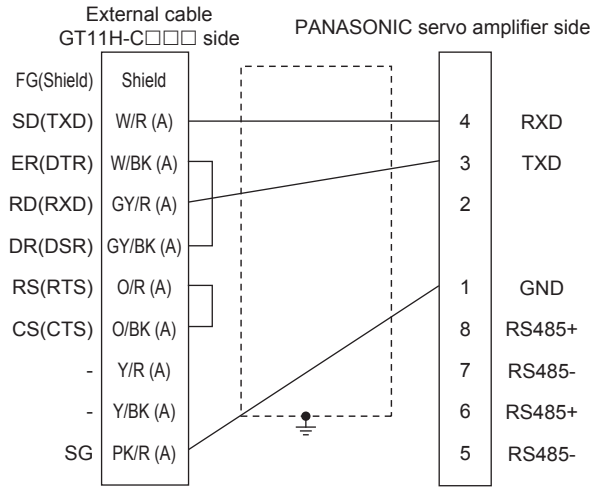

■ Precautions when preparing a cable

(1) Cable length
The length of the RS-232 cable must be 2m or less.

(2) Connector conversion box side connector
For the connector conversion box side connector, refer to the following.

☞ 6.6 Connector Conversion Box

(3) External cable side connector
For the connector specifications of the external cable side, refer to the following.

☞ 8.2 External Cable, Relay Cable

(4) PANASONIC servo amplifier side connector
Use the connector compatible with the PANASONIC servo amplifier.
For details, refer to the user's manual of the PANASONIC servo amplifier.

43.3.2 RS-485 cable

■ Connection diagram

RS485 connection diagram 1)

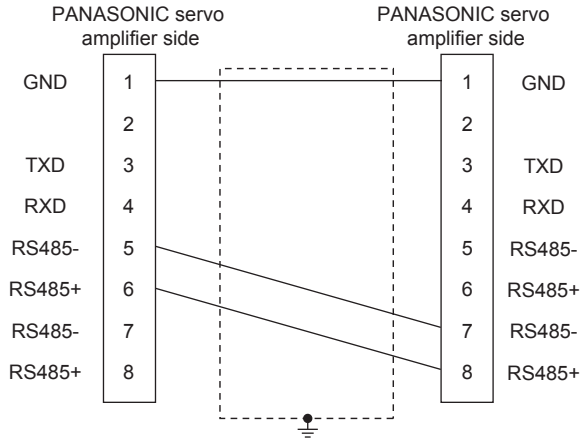

■ Precautions when preparing a cable

(1) Cable length
The length of the RS-485 cable must be 1m or less.

(2) PANASONIC servo amplifier side connector
Use the connector compatible with the PANASONIC servo amplifier.
For details, refer to the user's manual of the PANASONIC servo amplifier.

43.4 GOT Side Settings

43.4.1 Setting communication interface (Communication settings)

Set the channel of the equipment connected to the GOT.

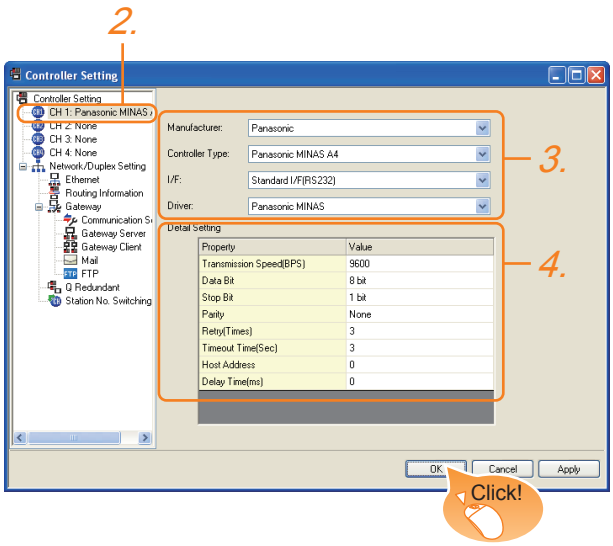

1. Select [Common] → [Controller Setting] from the menu.
2. The Controller Setting window is displayed. Select the channel to be used from the list menu.
3. Set the following items.
   - Manufacturer: PANASONIC
   - Controller Type: Set according to the Controller Type to be connected.
     - Panasonic MINAS-A4
     - Panasonic MINAS-A5
   - I/F: Interface to be used
   - Driver: Panasonic MINAS
4. The detailed setting is displayed after Manufacturer, Controller Type, I/F, and Driver are set.
   Make the settings according to the usage environment.
   ☞ 43.4.2 Communication detail settings

Click the OK button when settings are completed.

POINT

The settings of connecting equipment can be confirmed in [I/F Communication Setting].
For details, refer to the following.
☞ 18.1.2 I/F communication setting

43.4.2 Communication detail settings

Make the settings according to the usage environment.

Item	Description	Range
Transmission Speed	Set this item when change the transmission speed used for communication with the connected equipment. (Default: 9600bps)	9600bps, 19200bps, 38400bps, 57600bps, 115200bps
Data Bit	Set this item when change the data length used for communication with the connected equipment. (Default: 8bit)	7bit/8bit
Stop Bit	Specify the stop bit length for communications. (Default: 1bit)	1bit/2bit
Parity	Specify whether or not to perform a parity check, and how it is performed during communication. (Default: None)	None Even Odd
Retry	Set the number of retries to be performed when a communication error occurs. (Default: 3times)	0 to 5times
Timeout Time	Set the time period for a communication to time out. (Default: 3sec)	3 to 30sec
Host Address	Specify the station No. of the servo amplifier to connect the GOT. (Default: 0)	0 to 31
Delay Time	Set this item to adjust the transmission timing of the communication request from the GOT. (Default: 0ms)	0 to 300ms

POINT

(1) Communication interface setting by Utility
The communication interface setting can be changed on the Utility's [Communication setting] after writing [Communication Settings] of project data.
For details on the Utility, refer to the following manual.
☞ 11. COMMUNICATION INTERFACE SETTING (COMMUNICATION SETTING)

(2) Precedence in communication settings
When settings are made by GT Designer3 or the Utility, the latest setting is effective.

43.5 Setting on Servo Amplifier Side

POINT

PANASONIC Servo Amplifier

For details of the PANASONIC Servo Amplifier, refer to the following manual.

☞ PANASONIC Servo Amplifier user's Manual

43.5.1 Connecting to MINAS A4/A4F/A4L

■ MINAS A4/A4F/A4L communication settings

Set them from the main unit front panel of MINAS A4/A4F/A4L or using the setup support software.

PrNo.	Set value
Address of axis (Parameter No.00)	0 to 15
Baud rate setup of RS232*1 (Parameter No.0C)	2: 9600bps 3: 19200bps 4: 38400bps 5: 57600bps
Baud rate setup of RS485*1 (Parameter No.0D)	2: 9600bps 3: 19200bps 4: 38400bps 5: 57600bps

*1 Only transmission speeds available on the GOT side are shown.
Adjust the settings with GOT settings.

POINT

Axis name setting

- The axis name is determined according to the rotary switch ID set value when the power supply to the servo amplifier is turned on. This value will be the station number (axis number) during communication.
- The axis name setting can be changed only with the rotary switch ID.

43.5.2 Connecting to MINAS A5

■ MINAS A5 communication settings

Set them from the main unit front panel of MINAS A5 or using the setup support software.

PrNo.	Set value
Address of axis (Parameter No.5.31)	0 to 31
Baud rate setup of RS232*1 (Parameter No.5.29)	2: 9600bps 3: 19200bps 4: 38400bps 5: 57600bps
Baud rate setup of RS485*1 (Parameter No.5.30)	2: 9600bps 3: 19200bps 4: 38400bps 5: 57600bps

*1 Only transmission speeds available on the GOT side are shown.
Adjust the settings with GOT settings.

43.5.3 Station number setting

Set each station number so that no station number overlaps.

The station number can be set without regard to the cable connection order. There is no problem even if station numbers are not consecutive.

- When connecting the GOT and servo amplifier with RS-232
  Set the station number (axis number) of the servo amplifier connected to the GOT to 0. Set the station numbers (axis numbers) of other servo amplifiers connected to the GOT to other than 0.

  Example of RS-232 connection between GOT-servo amplifier

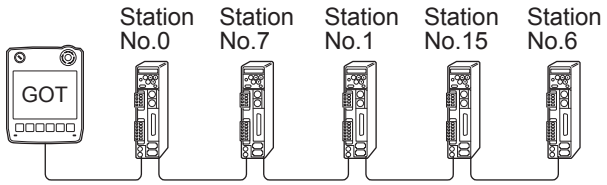

Examples of station number setting

(1) Direct specification

When setting the device, specify the station number of the servo amplifier of which data is to be changed.

Model	Specification range
MINAS A4, MINAS A4F, MINAS A4L	0 to 15
MINAS A5	0 to 31

(2) Indirect specification

When setting the device, indirectly specify the station number of the inverter of which data is to be changed using the 16-bit GOT internal data register (GD10 to GD25).

When specifying the station No. from 100 to 115 on GT Designer3, the value of GD10 to GD25 compatible to the station No. specification will be the station No. of the servo amplifier.

Specification station No.	Compatible device	Setting range
100	GD10	• MINAS A4, MINAS A4F, MINAS A4L 0 to 15 • MINAS A5 0 to 31 For the setting other than the above, a communication timeout error will occur.
101	GD11	
102	GD12	
103	GD13	
104	GD14	
105	GD15	
106	GD16	
107	GD17	
108	GD18	
109	GD19	
110	GD20	
111	GD21	
112	GD22	
113	GD23	
114	GD24	
115	GD25	

43.6 Device Range that Can Be Set

For details on the device range of controllers that can be used on GT14 Handy, refer to the following manuals.

☞ GT Designer3 Version1 Screen Design Manual (Fundamentals)

☞ GOT1000 Series Connection Manual (Non-Mitsubishi Products 1) for GT Works3

43.7 Precautions

■ Station number setting in the servo system

Configure the servo system so that there is a servo amplifier with a station number set with a host address.
For details of host address setting, refer to the following.

☞ 43.4.2 Communication detail settings

■ Monitor speed

When monitoring multiple station devices placed on the same GOT screen, the monitor speed is slow.
Even when monitoring a single station, the monitor speed is slow if the number of device points is large.

■ Combination use of MINAS A4 series and MINAS A5 series

MINAS A4 series and MINAS A5 series cannot be used together. The multiple MINAS A4 series can be used together.

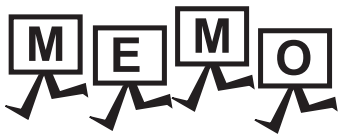
MEMO

44. CONNECTION TO PANASONIC INDUSTRIAL DEVICES SUNX PLC

44.1 Connectable Model List

The following table shows the connectable models.

Model	Clock	Communication type	GT14 Handy	Refer to
FP0-C16CT	×	RS-232	○	44.2.1
FP0-C32CT				
FP0R	○			
FP1-C24C	○	RS-232	○	44.2.2
FP1-C40C				
FP2	○*1	RS-232	○	44.2.3
FP2SH	○			
FP3	○*2	RS-232	○	44.2.4
FP5	○			
FP10(S)	○	RS-232	○	44.2.5
FP-M(C20TC)	○	RS-232	○	44.2.6
FP-M(C32TC)	○		○	
FP10SH	○	RS-232	○	44.2.7
FP-Σ	○	RS-232	○	44.2.8
FP-X	○	RS-232 RS-422	○	44.2.9

*1 Any of the extension memory unit FP2-EM1, FP2-EM2 or FP2-EM3 is required.

*2 The clock function is available for the AFP3210C-F, AFP3211C-F, AFP3212C-F and AFP3220C-F.

44.2 System Configuration

44.2.1 Connecting to FP0-C16CT, FP0-C32CT, or FP0R

Communication driver
Panasonic MEWNET-FP

(1) When using the connector conversion box

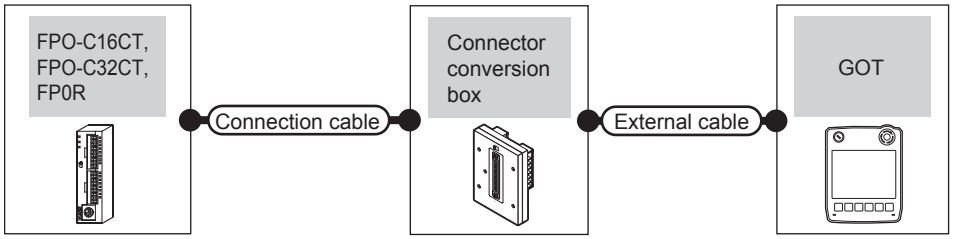

PLC		Connection cable	Connector conversion box	External cable	GOT model	Total distance	Number of connectable equipment
Model	Communication type	Cable model Connection diagram number					
FP0-C16CT FP0-C32CT FP0R (Tool port)	RS-232	AFC8503(3m)*1	GT11H-CNB-37S	GT11H-C30-37P(3m)	GT14 Handy	6m	1 GOT for 1 PLC
FP0-C16CT FP0-C32CT FP0R (RS232C port)	RS-232	GT09-C30R20904-3C(3m) or User preparing RS232 connection diagram 10)	GT11H-CNB-37S	GT11H-C30-37P(3m)	GT14 Handy	6m	

*1 Product manufactured by Panasonic Industrial Devices SUNX Co., Ltd. For details of this product, contact Panasonic Industrial Devices SUNX Co., Ltd.

(2) When using the external cable (GT11H-C□□□-37P)

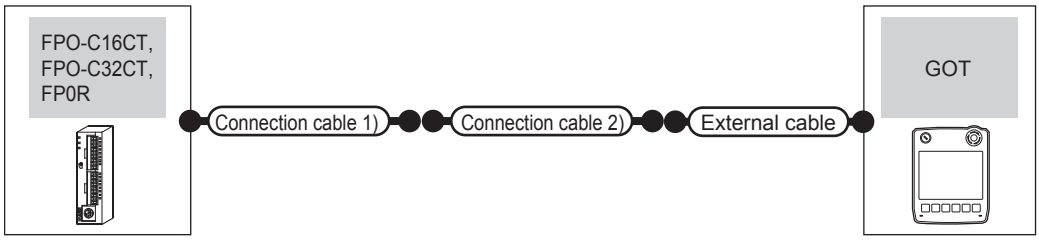

PLC		Connection cable 1)	Connection cable 2)	External cable	GOT model	Total distance	Number of connectable equipment
Model	Communication type	Cable model	Connection diagram number				
FP0-C16CT FP0-C32CT FP0R (Tool port)	RS-232	AFC8503(3m)*1	User preparing RS232 connection diagram 25)	GT11H-C30-37P(3m)	GT14 Handy	6m	1 GOT for 1 PLC
FP0-C16CT FP0-C32CT FP0R (RS232C port)	RS-232	-	User preparing RS232 connection diagram 11)	GT11H-C30-37P(3m)	GT14 Handy	6m	

*1 Product manufactured by Panasonic Industrial Devices SUNX Co., Ltd. For details of this product, contact Panasonic Industrial Devices SUNX Co., Ltd.

(3) When using the external cable (GT11H-C□□□)

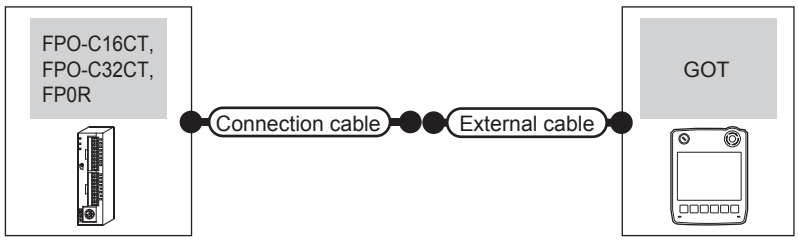

PLC		Connection cable	External cable	GOT model	Total distance	Number of connectable equipment
Model	Communication type	Cable model				
FP0-C16CT FP0-C32CT FP0R (Tool port)	RS-232	AFC8503(3m)*1	GT11H-C30(3m) GT11H-C60(6m) User preparing RS232 connection diagram 26)	GT14 Handy	6m	1 GOT for 1 PLC
FP0-C16CT FP0-C32CT FP0R (RS232C port)	RS-232	-	GT11H-C30(3m) GT11H-C60(6m) User preparing RS232 connection diagram 12)	GT14 Handy	6m	

*1 Product manufactured by Panasonic Industrial Devices SUNX Co., Ltd. For details of this product, contact Panasonic Industrial Devices SUNX Co., Ltd.

44.2.2 Connecting to FP1-C24C or FP1-C40C

Communication driver
Panasonic MEWNET-FP

(1) When using the connector conversion box

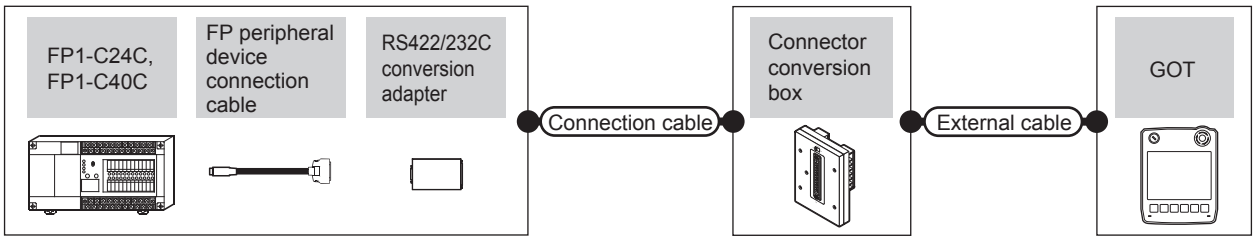

PLC		FP peripheral device connection cable*1	RS422/232 conversion adapter*1	Connection cable	Connector conversion box	External cable	GOT model	Total distance	Number of connectable equipment
Model	Communication type	Cable model Connection diagram number		Cable model Connection diagram number					
FP1-C24C FP1-C40C (Tool port)	RS-232	AFP15205 (0.5m)	AFP8550	GT09-C30R20901-25P(3m) or User preparing RS232 connection diagram 1)	GT11H-CNB-37S	GT11H-C30-37P(3m)	GT14 Handy	6m	1 GOT for 1 PLC
FP1-C24C FP1-C40C (RS232C port)	RS-232	-	-	GT09-C30R20903-9P(3m) or User preparing RS232 connection diagram 7)	GT11H-CNB-37S	GT11H-C30-37P(3m)	GT14 Handy	6m	

*1 Product manufactured by Panasonic Industrial Devices SUNX Co., Ltd. For details of this product, contact Panasonic Industrial Devices SUNX Co., Ltd.

(2) When using the external cable (GT11H-C□□□-37P)

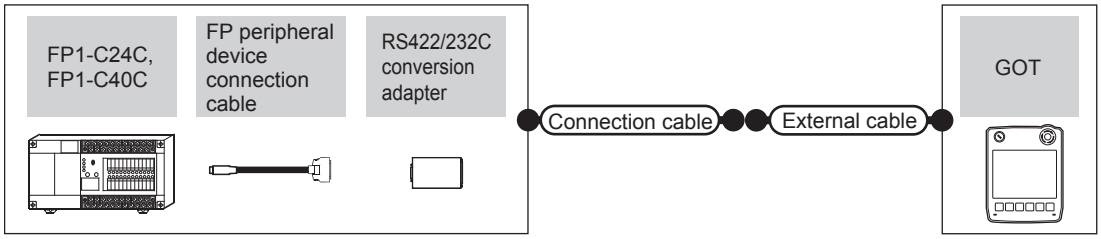

PLC		FP peripheral device connection cable*1	RS422/232 conversion adapter*1	Connection cable	External cable	GOT model	Total distance	Number of connectable equipment
Model	Communication type	Cable model Connection diagram number		Cable model Connection diagram number				
FP1-C24C FP1-C40C (Tool port)	RS-232	AFP15205 (0.5m)	AFP8550	User preparing RS232 connection diagram 2)	GT11H-C30-37P(3m)	GT14 Handy	6m	1 GOT for 1 PLC
FP1-C24C FP1-C40C (RS232C port)	RS-232	-	-	User preparing RS232 connection diagram 8)	GT11H-C30-37P(3m)	GT14 Handy	6m	

*1 Product manufactured by Panasonic Industrial Devices SUNX Co., Ltd. For details of this product, contact Panasonic Industrial Devices SUNX Co., Ltd.

(3) When using the external cable (GT11H-C□□□)

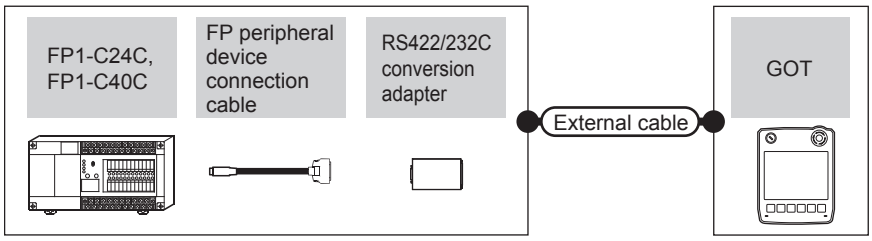

PLC		FP peripheral device connection cable*1	RS422/232 conversion adapter *1	External cable	GOT model	Total distance	Number of connectable equipment
Model	Communication type	Cable model Connection diagram number					
FP1-C24C FP1-C40C (Tool port)	RS-232	AFP15205 (0.5m)	AFP8550	GT11H-C30(3m) User preparing RS232 connection diagram 3)	GT14 Handy	6m	1 GOT for 1 PLC
FP1-C24C FP1-C40C (RS232C port)	RS-232	-	-	GT11H-C30(3m) GT11H-C60(6m) User preparing RS232 connection diagram 9)	GT14 Handy	6m	

*1 Product manufactured by Panasonic Industrial Devices SUNX Co., Ltd. For details of this product, contact Panasonic Industrial Devices SUNX Co., Ltd.

44.2.3 Connecting to FP2 or FP2SH

■ When connecting to tool port or RS232C port

Communication driver
Panasonic MEWNET-FP

(1) When using the connector conversion box

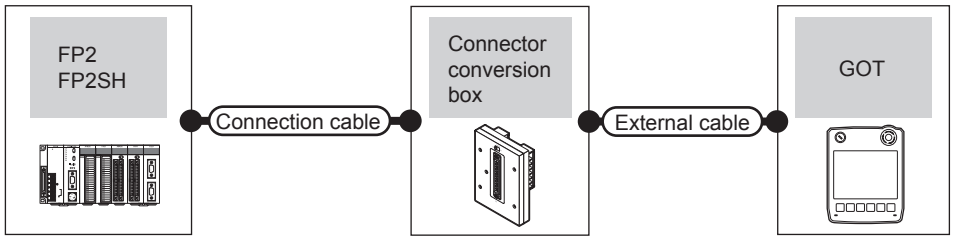

PLC		Connection cable	Connector conversion box	External cable	GOT model	Total distance	Number of connectable equipment
Model	Communication type	Cable model Connection diagram number					
FP2 FP2SH (Tool port)	RS-232	AFC8503(3m)*1	GT11H-CNB-37S	GT11H-C30-37P(3m)	GT14 Handy	6m	1 GOT for 1 PLC
FP2 FP2SH (RS232C port)	RS-232	AFC85853(3m)*1 GT09-C30R20902-9P(3m) or User preparing RS232 connection diagram 4)	GT11H-CNB-37S	GT11H-C30-37P(3m)	GT14 Handy	6m	

*1 Product manufactured by Panasonic Industrial Devices SUNX Co., Ltd. For details of this product, contact Panasonic Industrial Devices SUNX Co., Ltd.

(2) When using the external cable (GT11H-C□□□-37P)

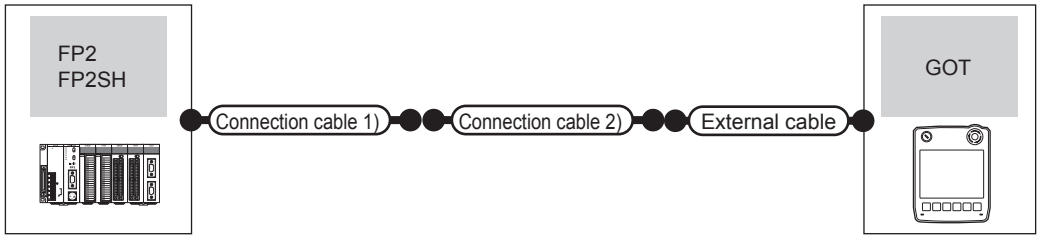

PLC		Connection cable 1)	Connection cable 2)	External cable	GOT model	Total distance	Number of connectable equipment
Model	Communication type	Cable model	Connection diagram number				
FP2 FP2SH (Tool port)	RS-232	AFC8503(3m)*1	User preparing RS232 connection diagram 25)	GT11H-C30-37P(3m)	GT14 Handy	6m	1 GOT for 1 PLC
FP2 FP2SH (RS232C port)	RS-232	-	User preparing RS232 connection diagram 5)	GT11H-C30-37P(3m)	GT14 Handy	6m	

*1 Product manufactured by Panasonic Industrial Devices SUNX Co., Ltd. For details of this product, contact Panasonic Industrial Devices SUNX Co., Ltd.

(3) When using the external cable (GT11H-C□□□)

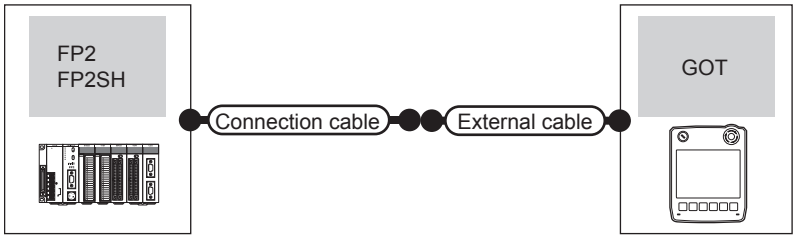

PLC		Connection cable	External cable	GOT model	Total distance	Number of connectable equipment
Model	Communication type	Cable model				
FP2 FP2SH (Tool port)	RS-232	AFC8503(3m)*1	GT11H-C30(3m) User preparing RS232 connection diagram 26)	GT14 Handy	6m	1 GOT for 1 PLC
FP2 FP2SH (RS232C port)	RS-232	-	GT11H-C30(3m) GT11H-C60(6m) User preparing RS232 connection diagram 6)	GT14 Handy	6m	

*1 Product manufactured by Panasonic Industrial Devices SUNX Co., Ltd. For details of this product, contact Panasonic Industrial Devices SUNX Co., Ltd.

■ When connecting to computer communication unit

Communication driver
Panasonic MEWNET-FP

(1) When using the connector conversion box

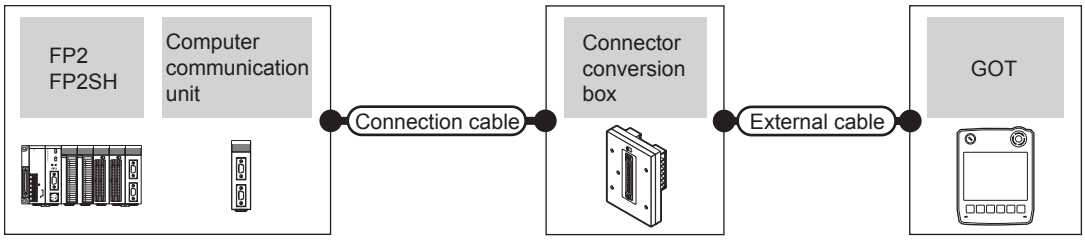

PLC		Computer communication unit*1	Connection cable	Connector conversion box	External cable	GOT model	Total distance	Number of connectable equipment
Model	Communication type		Cable model Connection diagram number					
FP2 FP2SH	RS-232	AFP2462	AFC85853(3m)*1 GT09-C30R20902-9P(3m) or User preparing RS232 connection diagram 4)	GT11H-CNB-37S	GT11H-C30-37P(3m)	GT14 Handy	6m	1 GOT for 1 computer communication unit

*1 Product manufactured by Panasonic Industrial Devices SUNX Co., Ltd. For details of this product, contact Panasonic Industrial Devices SUNX Co., Ltd.

(2) When using the external cable (GT11H-C□□□-37P)

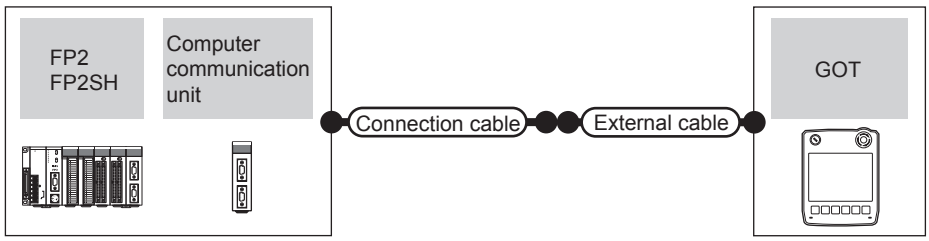

PLC		Computer communication unit*1	Connection cable	External cable	GOT model	Total distance	Number of connectable equipment
Model	Communication type		Cable model Connection diagram number				
FP2 FP2SH	RS-232	AFP2462	User preparing RS232 connection diagram 5)	GT11H-C30-37P(3m)	GT14 Handy	6m	1 GOT for 1 computer communication unit

*1 Product manufactured by Panasonic Industrial Devices SUNX Co., Ltd. For details of this product, contact Panasonic Industrial Devices SUNX Co., Ltd.

(3) When using the external cable (GT11H-C□□□)

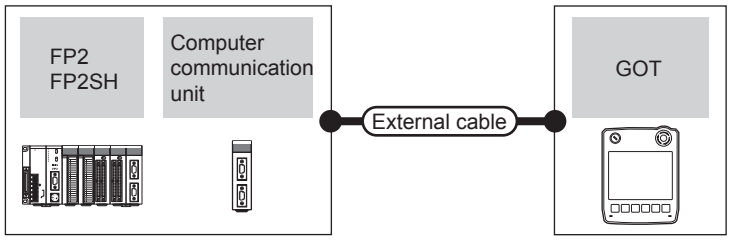

PLC		Computer communication unit*1	External cable	GOT model	Total distance	Number of connectable equipment
Model	Communication type					
FP2 FP2SH	RS-232	AFP2462	GT11H-C30(3m) GT11H-C60(6m) User preparing RS232 connection diagram 6)	GT14 Handy	6m	1 GOT for 1 computer communication unit

*1 Product manufactured by Panasonic Industrial Devices SUNX Co., Ltd. For details of this product, contact Panasonic Industrial Devices SUNX Co., Ltd.

44.2.4 Connecting to FP3 or FP5

■ When connecting to tool port

Communication driver

Panasonic MEWNET-FP

(1) When using the connector conversion box

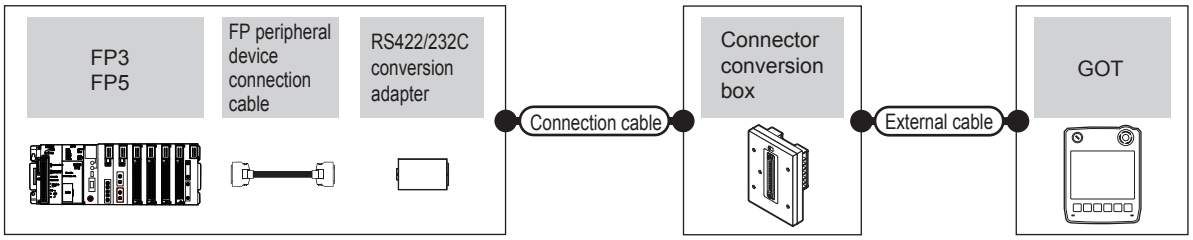

PLC		FP peripheral device connection cable*1	RS422/232C conversion adapter*1	Connection cable	Connector conversion box	External cable	GOT model	Total distance	Number of connectable equipment
Model	Communication type	Cable model Connection diagram number		Cable model Connection diagram number					
FP3 FP5	RS-232	AFP5520 (0.5m)	AFP8550	GT09-C30R20901-25P(3m) or User preparing RS232 connection diagram 1)	GT11H-CNB-37S	GT11H-C30-37P (3m)	GT14 Handy	6m	1 GOT for 1 RS422/232 conversion adapter

*1 Product manufactured by Panasonic Industrial Devices SUNX Co., Ltd. For details of this product, contact Panasonic Industrial Devices SUNX Co., Ltd.

(2) When using the external cable (GT11H-C□□□-37P)

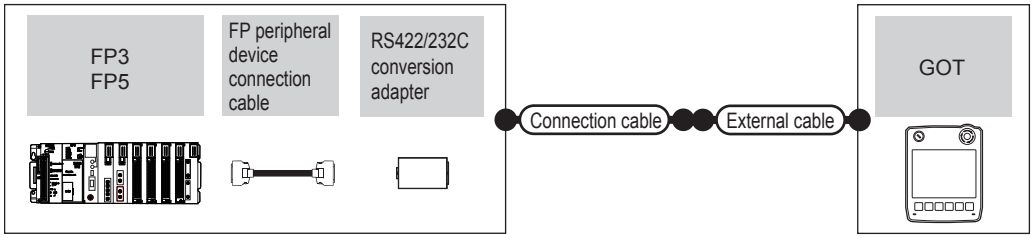

PLC		FP peripheral device connection cable*1	RS422/232C conversion adapter*1	Connection cable	External cable	GOT model	Total distance	Number of connectable equipment
Model	Communication type	Cable model Connection diagram number		Cable model Connection diagram number				
FP3 FP5	RS-232	AFP5520 (0.5m)	AFP8550	User preparing RS232 connection diagram 2)	GT11H-C30-37P(3m)	GT14 Handy	6m	1 GOT for 1 RS422/232 conversion adapter

*1 Product manufactured by Panasonic Industrial Devices SUNX Co., Ltd. For details of this product, contact Panasonic Industrial Devices SUNX Co., Ltd.

(3) When using the external cable (GT11H-C□□□)

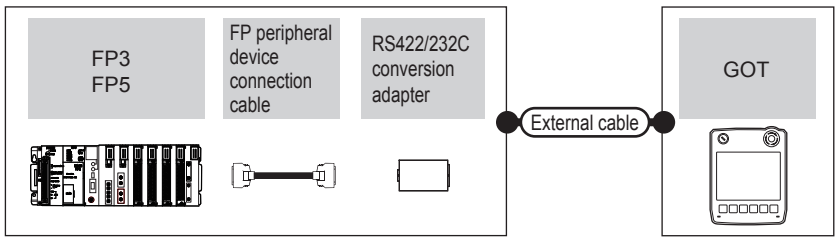

PLC		FP peripheral device connection cable*1	RS422/232C conversion adapter*1	External cable	GOT model	Total distance	Number of connectable equipment
Model	Communication type	Cable model Connection diagram number					
FP3 FP5	RS-232	AFP5520 (0.5m)	AFP8550	GT11H-C30(3m) User preparing RS232 connection diagram 3)	GT14 Handy	6m	1 GOT for 1 RS422/232 conversion adapter

■ When connecting to computer communication unit

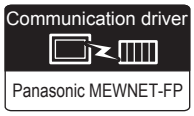

(1) When using the connector conversion box

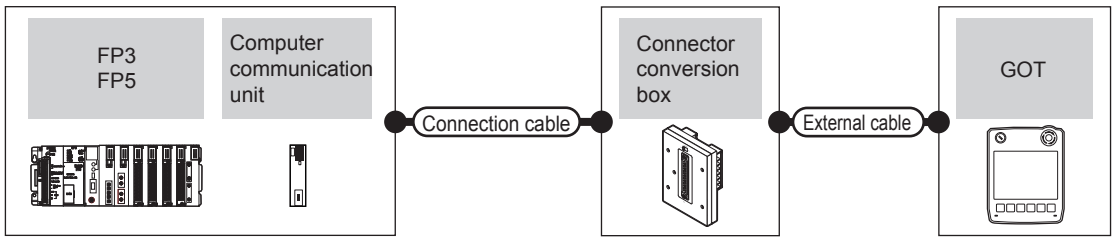

PLC		Computer communication unit*1	Connection cable	Connector conversion box	External cable	GOT model	Total distance	Number of connectable equipment
Model	Communication type		Cable model Connection diagram number					
FP3	RS-232	AFP3462	AFC85853(3m)*1 GT09-C30R20902-9P(3m) or User preparing RS232 connection diagram 4)	GT11H-CNB-37S	GT11H-C30-37P(3m)	GT14 Handy	6m	1 GOT for 1 computer communication unit
FP5	RS-232	AFP5462	AFC85853(3m)*1 GT09-C30R20902-9P(3m) or User preparing RS232 connection diagram 4)	GT11H-CNB-37S	GT11H-C30-37P(3m)	GT14 Handy	6m	

*1 Product manufactured by Panasonic Industrial Devices SUNX Co., Ltd. For details of this product, contact Panasonic Industrial Devices SUNX Co., Ltd.

(2) When using the external cable (GT11H-C□□□-37P)

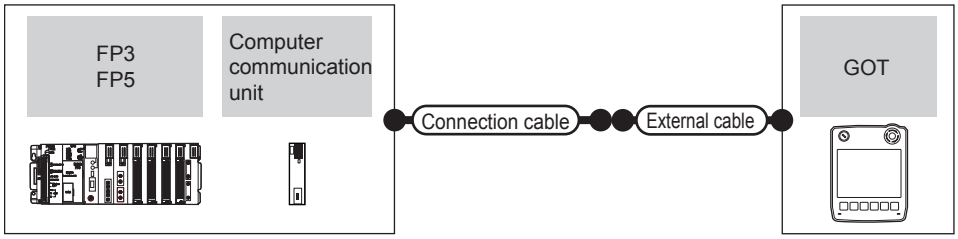

PLC		Computer communication unit*1	Connection cable	External cable	GOT model	Total distance	Number of connectable equipment
Model	Communication type		Cable model Connection diagram number				
FP3	RS-232	AFP3462	User preparing RS232 connection diagram 5)	GT11H-C30-37P(3m)	GT14 Handy	6m	1 GOT for 1 computer communicati on unit
FP5	RS-232	AFP5462	User preparing RS232 connection diagram 5)	GT11H-C30-37P(3m)	GT14 Handy	6m	

*1 Product manufactured by Panasonic Industrial Devices SUNX Co., Ltd. For details of this product, contact Panasonic Industrial Devices SUNX Co., Ltd.

(3) When using the external cable (GT11H-C□□□)

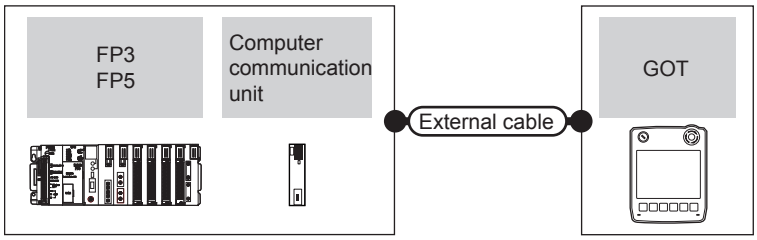

PLC		Computer communication unit*1	External cable	GOT model	Total distance	Number of connectable equipment
Model	Communication type					
FP3	RS-232	AFP3462	GT11H-C30(3m) GT11H-C60(6m) User preparing RS232 connection diagram 6)	GT14 Handy	6m	1 GOT for 1 computer communication unit
FP5	RS-232	AFP5462	GT11H-C30(3m) GT11H-C60(6m) User preparing RS232 connection diagram 6)	GT14 Handy	6m	

*1 Product manufactured by Panasonic Industrial Devices SUNX Co., Ltd. For details of this product, contact Panasonic Industrial Devices SUNX Co., Ltd.

44.2.5 Connecting to FP10(S)

■ When connecting to tool port

Communication driver

Panasonic MEWNET-FP

(1) When using the connector conversion box

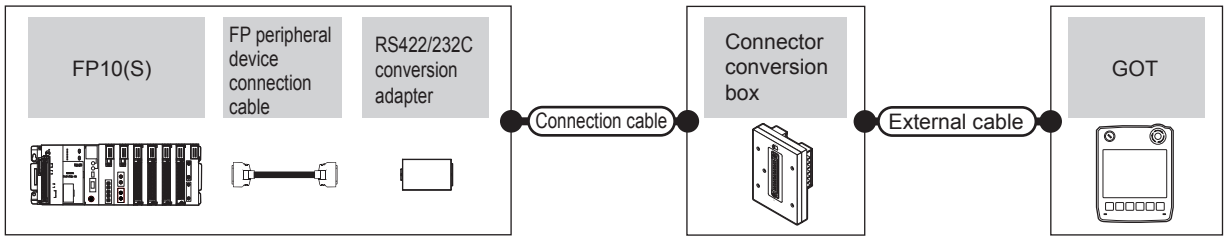

PLC		FP peripheral device connection cable*1	RS422/232 conversion adapter*1	Connection cable	Connector conversion box	External cable	GOT model	Total distance	Number of connectable equipment
Model	Communication type	Cable model Connection diagram number		Cable model Connection diagram number					
FP10(S)	RS-232	AFP5520 (0.5m)	AFP8550	GT09-C30R20901-25P or User preparing RS232 connection diagram 1)	GT11H-CNB-37S	GT11H-C30-37P(3m)	GT14 Handy	6m	1 GOT for 1 RS422/232 conversion adapter

*1 Product manufactured by Panasonic Industrial Devices SUNX Co., Ltd. For details of this product, contact Panasonic Industrial Devices SUNX Co., Ltd.

(2) When using the external cable (GT11H-C□□□-37P)

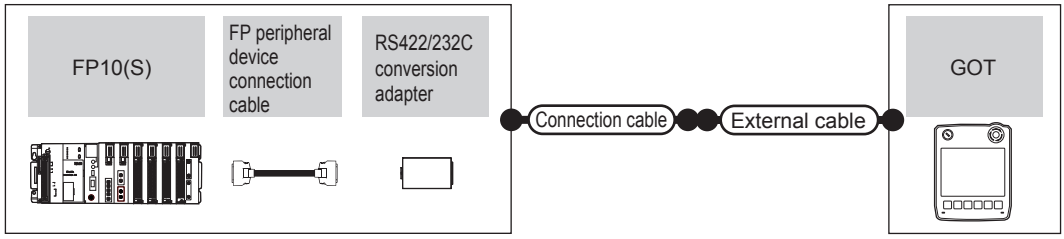

PLC		FP peripheral device connection cable*1	RS422/232 conversion adapter*1	Connection cable	External cable	GOT model	Total distance	Number of connectable equipment
Model	Communication type	Cable model Connection diagram number		Cable model Connection diagram number				
FP10(S)	RS-232	AFP5520 (0.5m)	AFP8550	User preparing RS232 connection diagram 2)	GT11H-C30-37P(3m)	GT14 Handy	6m	1 GOT for 1 RS422/232 conversion adapter

*1 Product manufactured by Panasonic Industrial Devices SUNX Co., Ltd. For details of this product, contact Panasonic Industrial Devices SUNX Co., Ltd.

(3) When using the external cable (GT11H-C□□□)

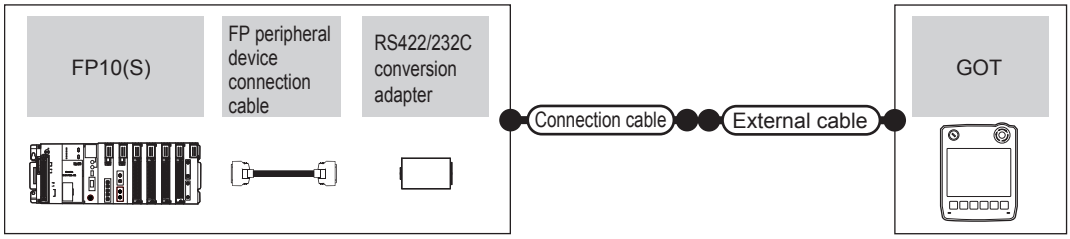

PLC		FP peripheral device connection cable*1	RS422/232 conversion adapter*1	External cable	GOT model	Total distance	Number of connectable equipment
Model	Communication type	Cable model Connection diagram number					
FP10(S)	RS-232	AFP5520 (0.5m)	AFP8550	GT11H-C30(3m) User preparing RS232 connection diagram 3)	GT14 Handy	6m	1 GOT for 1 RS422/232 conversion adapter

*1 Product manufactured by Panasonic Industrial Devices SUNX Co., Ltd. For details of this product, contact Panasonic Industrial Devices SUNX Co., Ltd.

■ When connecting to RS232C port

Communication driver
Panasonic MEWNET-FP

(1) When using the connector conversion box

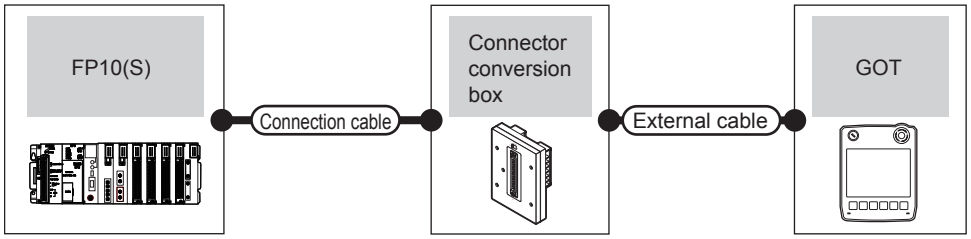

PLC		Connection cable	Connector conversion box	External cable	GOT model	Total distance	Number of connectable equipment
Model	Communication type	Cable model Connection diagram number					
FP10(S)	RS-232	AFC85853(3m)*1 GT09-C30R20902-9P(3m) or User preparing RS232 connection diagram 4)	GT11H-CNB-37S	GT11H-C30-37P(3m)	GT14 Handy	6m	1 GOT for 1 PLC

*1 Product manufactured by Panasonic Industrial Devices SUNX Co., Ltd. For details of this product, contact Panasonic Industrial Devices SUNX Co., Ltd.

(2) When using the external cable (GT11H-C□□□-37P)

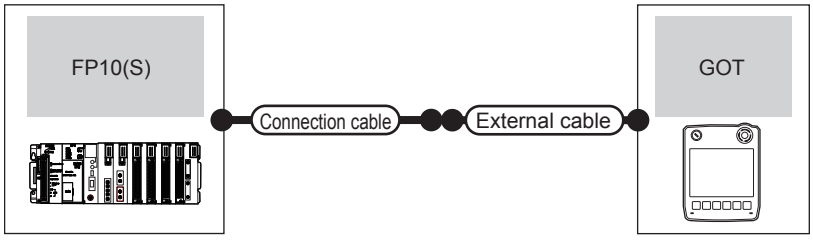

PLC		Connection cable	External cable	GOT model	Total distance	Number of connectable equipment
Model	Communication type	Cable model Connection diagram number				
FP10(S)	RS-232	User preparing RS232 connection diagram 5)	GT11H-C30-37P(3m)	GT14 Handy	6m	1 GOT for 1 PLC

(3) When using the external cable (GT11H-C□□□)

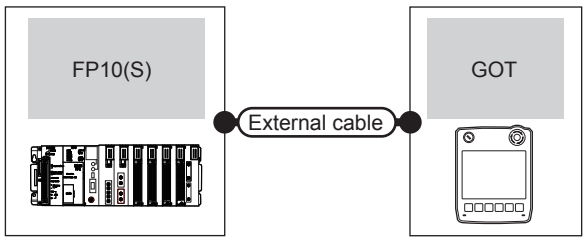

PLC		External cable	GOT model	Total distance	Number of connectable equipment
Model	Communication type				
FP10(S)	RS-232	GT11H-C30(3m) GT11H-C60(6m) (User preparing) RS232 connection diagram 6)	GT14 Handy	6m	1 GOT for 1 PLC

■ When connecting to computer communication unit

Communication driver

Panasonic MEWNET-FP

(1) When using the connector conversion box

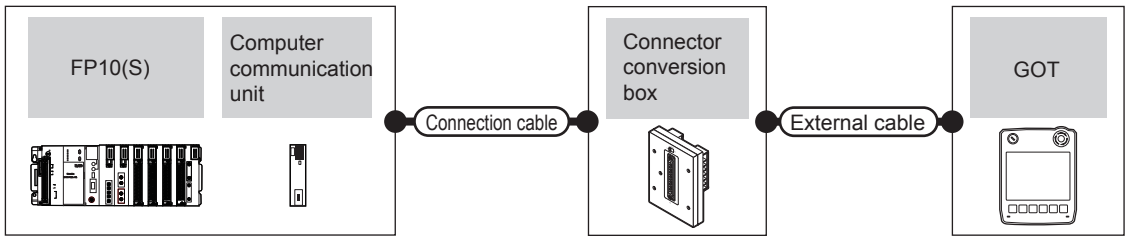

PLC		Computer communication unit*1	Connection cable	Connector conversion box	External cable	GOT model	Total distance	Number of connectable equipment
Model	Communication type		Cable model Connection diagram number					
FP10(S)	RS-232	AFP3462	AFC85853(3m)*1 GT09-C30R20902-9P(3m) or (User preparing) RS232 connection diagram 4)	GT11H-CNB-37S	GT11H-C30-37P(3m)	GT14 Handy	6m	1 GOT for 1 computer communication unit

*1 Product manufactured by Panasonic Industrial Devices SUNX Co., Ltd. For details of this product, contact Panasonic Industrial Devices SUNX Co., Ltd.

(2) When using the external cable (GT11H-C□□□-37P)

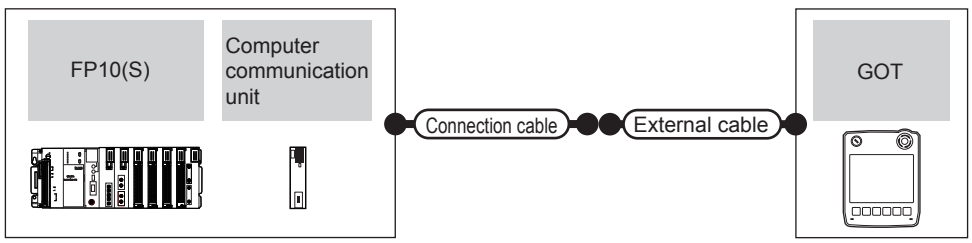

PLC		Computer communication unit*1	Connection cable	External cable	GOT model	Total distance	Number of connectable equipment
Model	Communication type		Cable model Connection diagram number				
FP10(S)	RS-232	AFP3462	(User preparing) RS232 connection diagram 5)	GT11H-C30-37P(3m)	GT14 Handy	6m	1 GOT for 1 computer communication unit

*1 Product manufactured by Panasonic Industrial Devices SUNX Co., Ltd. For details of this product, contact Panasonic Industrial Devices SUNX Co., Ltd.

(3) When using the external cable (GT11H-C□□□)

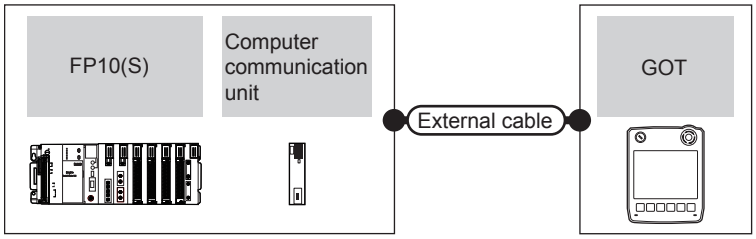

PLC		Computer communication unit*1	External cable	GOT model	Total distance	Number of connectable equipment
Model	Communication type					
FP10(S)	RS-232	AFP3462	GT11H-C30(3m) GT11H-C60(6m) (User preparing) RS232 connection diagram 6)	GT14 Handy	6m	1 GOT for 1 computer communication unit

*1 Product manufactured by Panasonic Industrial Devices SUNX Co., Ltd. For details of this product, contact Panasonic Industrial Devices SUNX Co., Ltd.

44.2.6 Connecting to FP-M(C20TC) or FP-M(C32TC)

■ When connecting to tool port or RS232C port

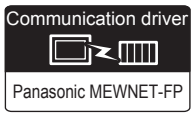

(1) When using the connector conversion box

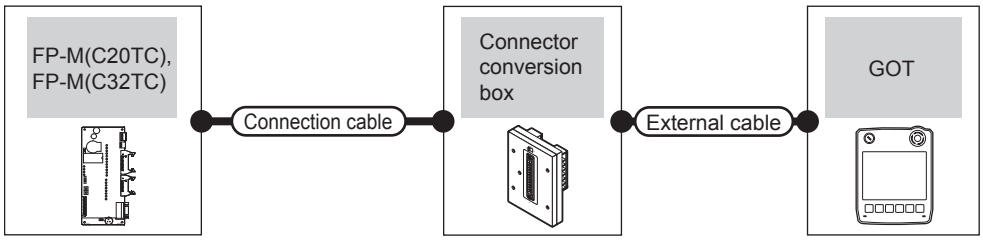

PLC		Connection cable	Connector conversion box	External cable	GOT model	Total distance	Number of connectable equipment
Model	Communication type	Cable model Connection diagram number					
FP-M(C20TC), FP-M(C32TC) (Tool port)	RS-232	AFC8503(3m)*1	GT11H-CNB-37S	GT11H-C30-37P(3m)	GT14 Handy	6m	1 GOT for 1 PLC
FP-M(C20TC), FP-M(C32TC) (RS232C port)	RS-232	AFC85853(3m)*1 GT09-C30R20902-9P(3m) or (User preparing) RS232 connection diagram 4)			GT14 Handy	6m	

*1 Product manufactured by Panasonic Industrial Devices SUNX Co., Ltd. For details of this product, contact Panasonic Industrial Devices SUNX Co., Ltd.

(2) When using the external cable (GT11H-C□□□-37P)

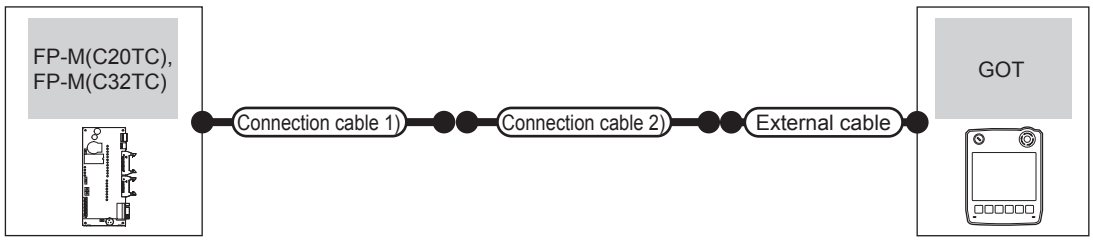

PLC		Connection cable 1)	Connection cable 2)	External cable	GOT model	Total distance	Number of connectable equipment
Model	Communication type	Cable model	Connection diagram number				
FP-M(C20TC), FP-M(C32TC) (Tool port)	RS-232	AFC8503(3m)*1	User preparing RS232 connection diagram 25)	GT11H-C30-37P(3m)	GT14 Handy	6m	1 GOT for 1 PLC
FP-M(C20TC), FP-M(C32TC) (RS232C port)	RS-232	-	User preparing RS232 connection diagram 5)	GT11H-C30-37P(3m)	GT14 Handy	6m	

*1 Product manufactured by Panasonic Industrial Devices SUNX Co., Ltd. For details of this product, contact Panasonic Industrial Devices SUNX Co., Ltd.

(3) When using the external cable (GT11H-C□□□)

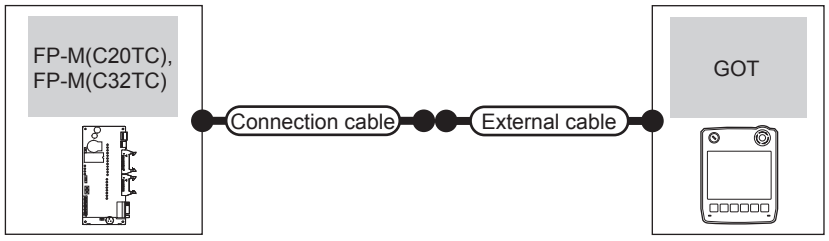

PLC		Connection cable	External cable	GOT model	Total distance	Number of connectable equipment
Model	Communication type	Cable model				
FP-M(C20TC), FP-M(C32TC) (Tool port)	RS-232	AFC8503(3m)*1	GT11H-C30(3m) User preparing RS232 connection diagram 26)	GT14 Handy	6m	1 GOT for 1 PLC
FP-M(C20TC), FP-M(C32TC) (RS232C port)	RS-232	-	GT11H-C30(3m) GT11H-C60(6m) User preparing RS232 connection diagram 6)	GT14 Handy	6m	

*1 Product manufactured by Panasonic Industrial Devices SUNX Co., Ltd. For details of this product, contact Panasonic Industrial Devices SUNX Co., Ltd.

44.2.7 Connecting to FP10SH

■ When connecting to tool port or RS232C port

Communication driver

Panasonic MEWNET-FP

(1) When using the connector conversion box

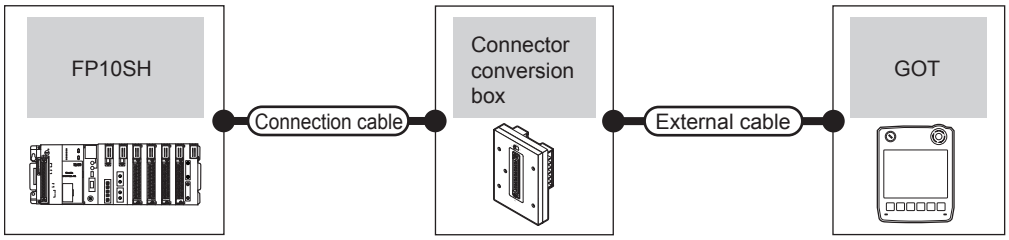

PLC		Connection cable	Connector conversion box	External cable	GOT model	Total distance	Number of connectable equipment
Model	Communication type	Cable model Connection diagram number					
FP10SH	RS-232	AFC85853(3m)*1 GT09-C30R20902-9P(3m) or User preparing RS232 connection diagram 4)	GT11H-CNB-37S	GT11H-C30-37P(3m)	GT14 Handy	6m	1 GOT for 1 PLC

*1 Product manufactured by Panasonic Industrial Devices SUNX Co., Ltd. For details of this product, contact Panasonic Industrial Devices SUNX Co., Ltd.

(2) When using the external cable (GT11H-C□□□-37P)

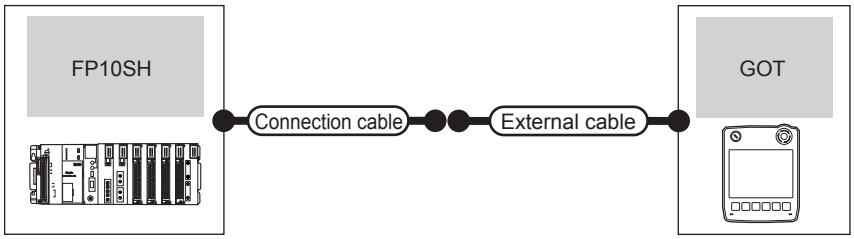

PLC		Connection cable	External cable	GOT model	Total distance	Number of connectable equipment
Model	Communication type	Cable model Connection diagram number				
FP10SH	RS-232	User preparing RS232 connection diagram 5)	GT11H-C30-37P(3m)	GT14 Handy	6m	1 GOT for 1 PLC

(3) When using the external cable (GT11H-C□□□)

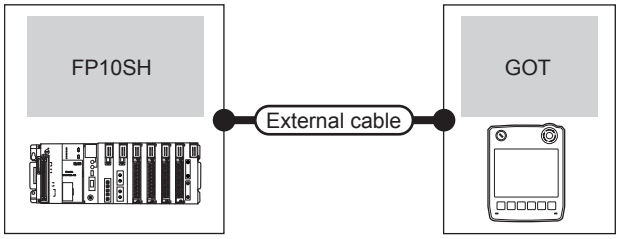

PLC		External cable	GOT model	Total distance	Number of connectable equipment
Model	Communication type				
FP10SH	RS-232	GT11H-C30(3m) GT11H-C60(6m) User preparing RS232 connection diagram 6)	GT14 Handy	6m	1 GOT for 1 PLC

■ When connecting to computer communication unit

Communication driver
Panasonic MEWNET-FP

(1) When using the connector conversion box

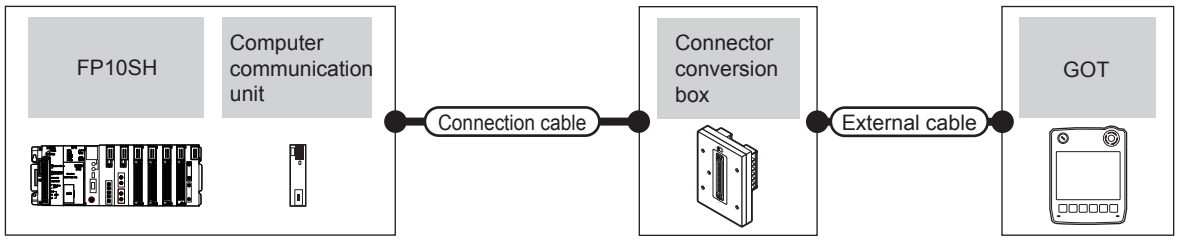

PLC		Computer communication unit*1	Connection cable	Connector conversion box	External cable	GOT model	Total distance	Number of connectable equipment
Model	Communication type		Cable model Connection diagram number					
FP10SH	RS-232	AFP3462	AFC85853(3m)*1 GT09-C30R20902-9P(3m) or User preparing RS232 connection diagram 4)	GT11H-CNB-37S	GT11H-C30-37P(3m)	GT14 Handy	6m	1 GOT for 1 computer communicatio n unit

*1 Product manufactured by Panasonic Industrial Devices SUNX Co., Ltd. For details of this product, contact Panasonic Industrial Devices SUNX Co., Ltd.

(2) When using the external cable (GT11H-C□□□-37P)

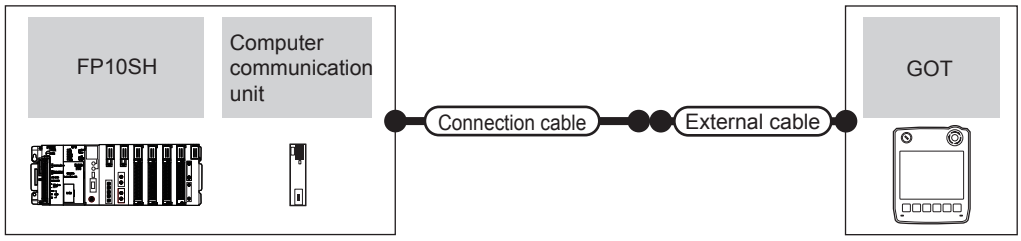

PLC		Computer communication unit*1	Connection cable	External cable	GOT model	Total distance	Number of connectable equipment
Model	Communication type		Cable model Connection diagram number				
FP10SH	RS-232	AFP3462	User preparing RS232 connection diagram 5)	GT11H-C30-37P(3m)	GT14 Handy	6m	1 GOT for 1 computer communication unit

*1 Product manufactured by Panasonic Industrial Devices SUNX Co., Ltd. For details of this product, contact Panasonic Industrial Devices SUNX Co., Ltd.

(3) When using the external cable (GT11H-C□□□)

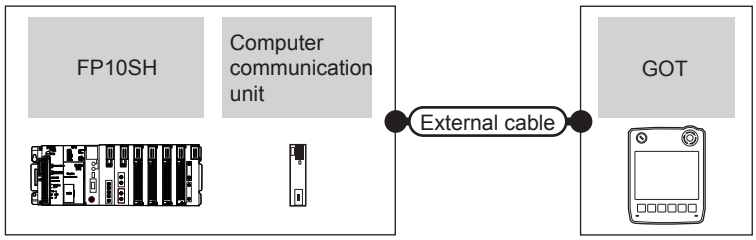

PLC		Computer communication unit*1	External cable	GOT model	Total distance	Number of connectable equipment
Model	Communication type					
FP10SH	RS-232	AFP3462	GT11H-C30(3m) GT11H-C60(6m) User preparing RS232 connection diagram 6)	GT14 Handy	6m	1 GOT for 1 computer communication unit

*1 Product manufactured by Panasonic Industrial Devices SUNX Co., Ltd. For details of this product, contact Panasonic Industrial Devices SUNX Co., Ltd.

44.2.8 Connecting to FPΣ

■ When connecting to tool port

Communication driver

Panasonic MEWNET-FP

(1) When using the connector conversion box

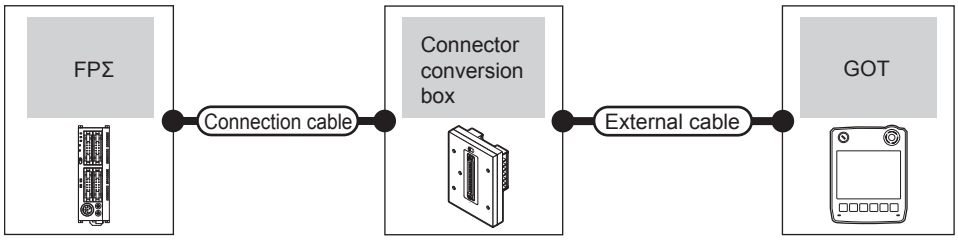

PLC		Connection cable	Connector conversion box	External cable	GOT model	Total distance	Number of connectable equipment
Model	Communication type	Cable model Connection diagram number					
FPΣ	RS-232	AFC8503(3m)*1	GT11H-CNB-37S	GT11H-C30-37P(3m)	GT14 Handy	6m	1 GOT for 1 PLC

*1 Product manufactured by Panasonic Industrial Devices SUNX Co., Ltd. For details of this product, contact Panasonic Industrial Devices SUNX Co., Ltd.

(2) When using the external cable (GT11H-C□□□-37P)

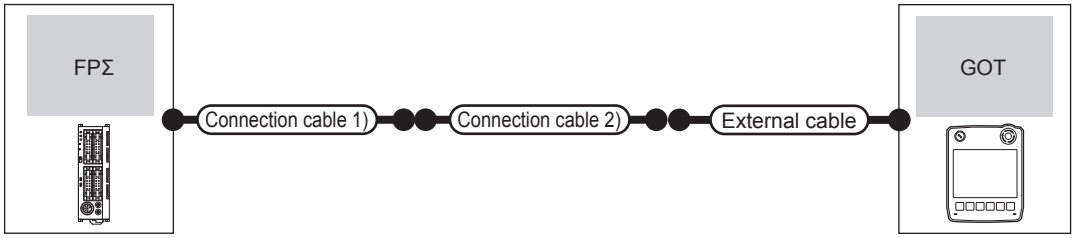

PLC		Connection cable 1)	Connection cable 2)	External cable	GOT model	Total distance	Number of connectable equipment
Model	Communication type	Cable model	Connection diagram number				
FPΣ	RS-232	AFC8503(3m)*1	User preparing RS232 connection diagram 25)	GT11H-C30-37P(3m)	GT14 Handy	6m	1 GOT for 1 PLC

*1 Product manufactured by Panasonic Industrial Devices SUNX Co., Ltd. For details of this product, contact Panasonic Industrial Devices SUNX Co., Ltd.

(3) When using the external cable (GT11H-C□□□)

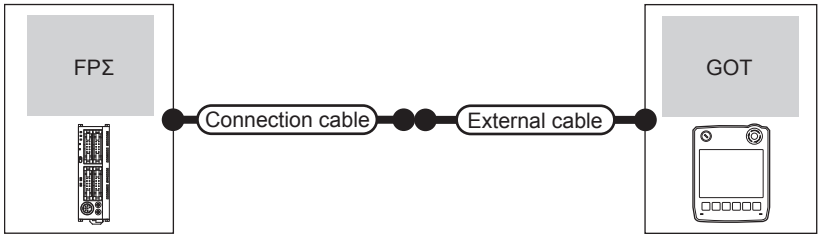

PLC		Connection cable	External cable	GOT model	Total distance	Number of connectable equipment
Model	Communication type	Cable model				
FPΣ	RS-232	AFC8503(3m)*1	GT11H-C30(3m) User preparing RS232 connection diagram 26)	GT14 Handy	6m	1 GOT for 1 PLC

*1 Product manufactured by Panasonic Industrial Devices SUNX Co., Ltd. For details of this product, contact Panasonic Industrial Devices SUNX Co., Ltd.

■ When connecting to COM port

Communication driver
Panasonic MEWNET-FP

(1) When using the connector conversion box

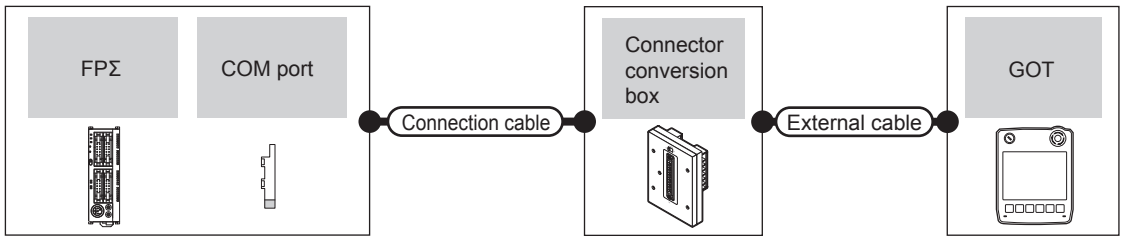

PLC			Connection cable	Connector conversion box	External cable	GOT model	Total distance	Number of connectable equipment
Model	COM port*1	Communication type	Cable model Connection diagram number					
FPΣ	AFPG801	RS-232	User preparing RS232 connection diagram 13)	GT11H-CNB-37S	GT11H-C30-37P(3m)	GT14 Handy	6m	1 GOT for 1 PLC
	AFPG802	RS-232	User preparing RS232 connection diagram 16)	GT11H-CNB-37S	GT11H-C30-37P(3m)			

*1 Product manufactured by Panasonic Industrial Devices SUNX Co., Ltd. For details of this product, contact Panasonic Industrial Devices SUNX Co., Ltd.

(2) When using the external cable (GT11H-C□□□-37P)

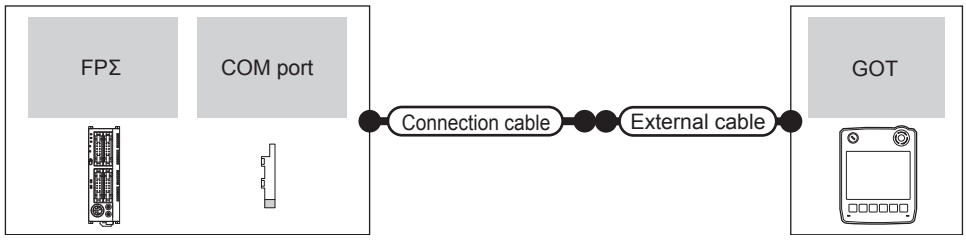

PLC			Connection cable	External cable	GOT model	Total distance	Number of connectable equipment
Model	COM port*1	Communication type	Cable model Connection diagram number				
FPΣ	AFPG801	RS-232	User preparing RS232 connection diagram 14)	GT11H-C30-37P(3m)	GT14 Handy	6m	1 GOT for 1 PLC
	AFPG802	RS-232	User preparing RS232 connection diagram 17)				

*1 Product manufactured by Panasonic Industrial Devices SUNX Co., Ltd. For details of this product, contact Panasonic Industrial Devices SUNX Co., Ltd.

(3) When using the external cable (GT11H-C□□□)

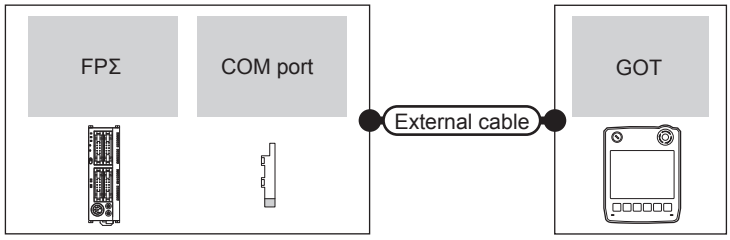

PLC			External cable	GOT model	Total distance	Number of connectable equipment
Model	COM port*1	Communication type				
FPΣ	AFPG801	RS-232	GT11H-C30(3m) GT11H-C60(6m) User preparing RS232 connection diagram 15)	GT14 Handy	6m	1 GOT for 1 PLC
	AFPG802	RS-232	GT11H-C30(3m) GT11H-C60(6m) User preparing RS232 connection diagram 18)			

*1 Product manufactured by Panasonic Industrial Devices SUNX Co., Ltd. For details of this product, contact Panasonic Industrial Devices SUNX Co., Ltd.

44.2.9 Connecting to FP-X

■ When connecting to tool port

Communication driver

Panasonic MEWNET-FP

(1) When using the connector conversion box

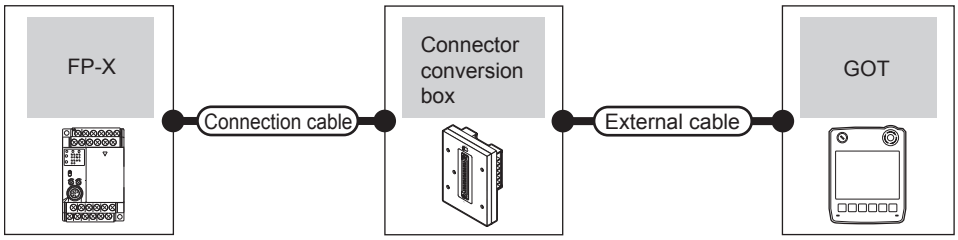

PLC		Connection cable	Connector conversion box	External cable	GOT model	Total distance	Number of connectable equipment
Model	Communication type	Cable model Connection diagram number					
FP-X	RS-232	AFC8503(3m)*1	GT11H-CNB-37S	GT11H-C30-37P(3m)	GT14 Handy	6m	1 GOT for 1 PLC

*1 Product manufactured by Panasonic Industrial Devices SUNX Co., Ltd. For details of this product, contact Panasonic Industrial Devices SUNX Co., Ltd.

(2) When using the external cable (GT11H-C□□□-37P)

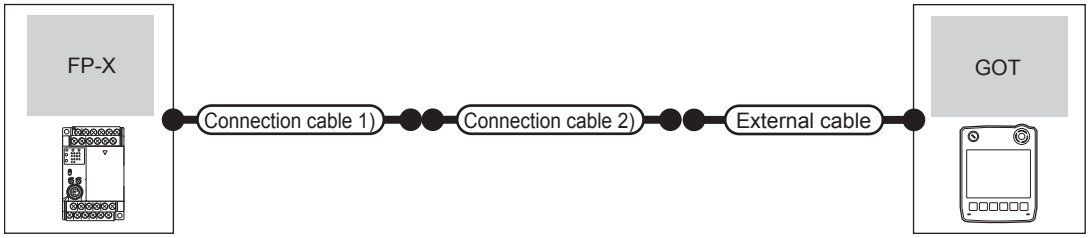

PLC		Connection cable 1)	Connection cable 2)	External cable	GOT model	Total distance	Number of connectable equipment
Model	Communication type	Cable model	Connection diagram number				
FP-X	RS-232	AFC8503(3m)*1	User preparing RS232 connection diagram 25)	GT11H-C30-37P(3m)	GT14 Handy	6m	1 GOT for 1 PLC

*1 Product manufactured by Panasonic Industrial Devices SUNX Co., Ltd. For details of this product, contact Panasonic Industrial Devices SUNX Co., Ltd.

(3) When using the external cable (GT11H-C□□□)

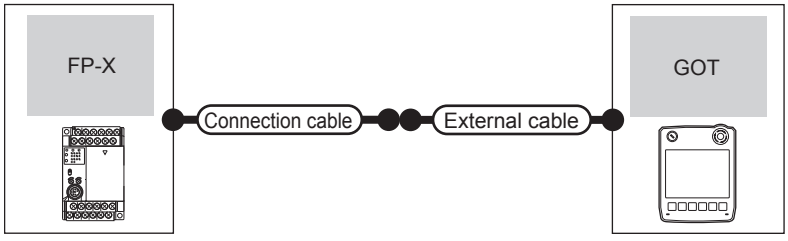

PLC		Connection cable	External cable	GOT model	Total distance	Number of connectable equipment
Model	Communication type	Cable model				
FP-X	RS-232	AFC8503(3m)*1	GT11H-C30(3m) User preparing RS232 connection diagram 26)	GT14 Handy	6m	1 GOT for 1 PLC

*1 Product manufactured by Panasonic Industrial Devices SUNX Co., Ltd. For details of this product, contact Panasonic Industrial Devices SUNX Co., Ltd.

■ When connecting to communication cassette

Communication driver
Panasonic MEWNET-FP

(1) When using the connector conversion box

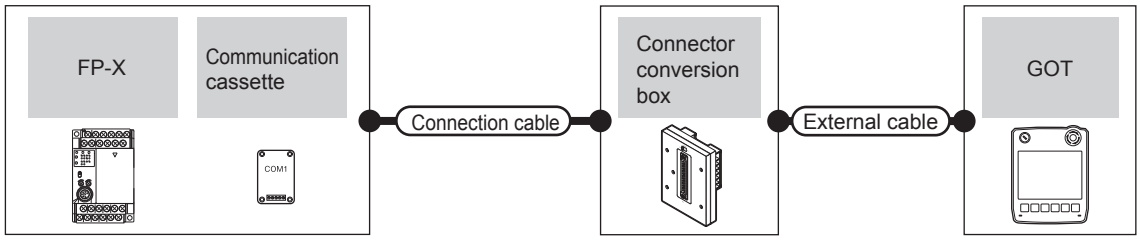

PLC		Communication cassette*1	Connection cable	Connector conversion box	External cable	GOT model	Total distance	Number of connectable equipment
Model	Communication type		Cable model Connection diagram number					
FP-X	RS-232	AFPX-COM1 (RS232C one channel type)	User preparing RS232 connection diagram 13)	GT11H-CNB-37S	GT11H-C30-37P(3m)	GT14 Handy	6m	1 GOT for 1 PLC
		AFPX-COM2*2 (RS232C two channel type)	User preparing RS232 connection diagram 16)	GT11H-CNB-37S	GT11H-C30-37P(3m)	GT14 Handy	6m	
	RS-422	AFPX-COM3 (RS485/RS422 one channel type)	User preparing RS422 connection diagram 1)	GT11H-CNB-37S	GT11H-C30-37P(3m) GT11H-C60-37P(6m) GT11H-C100-37P(10m)	GT14 Handy	13m	
	RS-232	AFPX-COM4*2 (RS485 one channel and RS232C one channel mixed type)	User preparing RS232 connection diagram 19)	GT11H-CNB-37S	GT11H-C30-37P(3m)	GT14 Handy	6m	

*1 Product manufactured by Panasonic Industrial Devices SUNX Co., Ltd. For details of this product, contact Panasonic Industrial Devices SUNX Co., Ltd.

*2 To connect C30 and C60, USB port may set at the COM2 port on AFPX-COM2 and AFPX-COM4. In this case, set the COM2 port to RS232C.

(2) When using the external cable (GT11H-C□□□-37P)

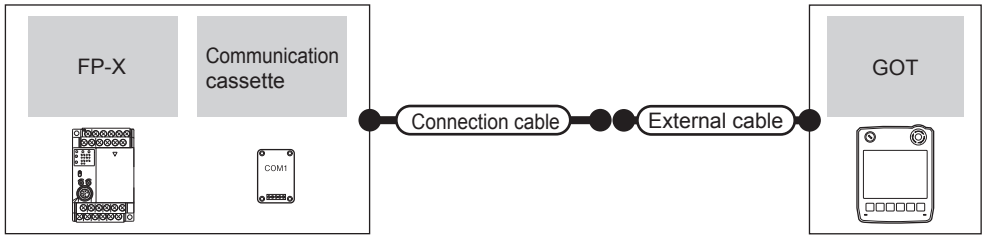

PLC		Communication cassette*1	Connection cable	External cable	GOT model	Total distance	Number of connectable equipment
Model	Communication type		Cable model Connection diagram number				
FP-X	RS-232	AFPX-COM1 (RS232C one channel type)	User preparing RS232 connection diagram 14)	GT11H-C30-37P(3m)	GT14 Handy	6m	1 GOT for 1 PLC
		AFPX-COM2*2 (RS232C two channel type)	User preparing RS232 connection diagram 17)	GT11H-C30-37P(3m)	GT14 Handy	6m	
	RS-422	AFPX-COM3 (RS485/RS422 one channel type)	User preparing RS422 connection diagram 2)	GT11H-C30-37P(3m) GT11H-C60-37P(6m) GT11H-C100-37P(10m)	GT14 Handy	13m	
	RS-232	AFPX-COM4*2 (RS485 one channel and RS232C one channel mixed type)	User preparing RS232 connection diagram 20)	GT11H-C30-37P(3m)	GT14 Handy	6m	

*1 Product manufactured by Panasonic Industrial Devices SUNX Co., Ltd. For details of this product, contact Panasonic Industrial Devices SUNX Co., Ltd.

*2 To connect C30 and C60, USB port may set at the COM2 port on AFPX-COM2 and AFPX-COM4. In this case, set the COM2 port to RS232C.

(3) When using the external cable (GT11H-C□□□)

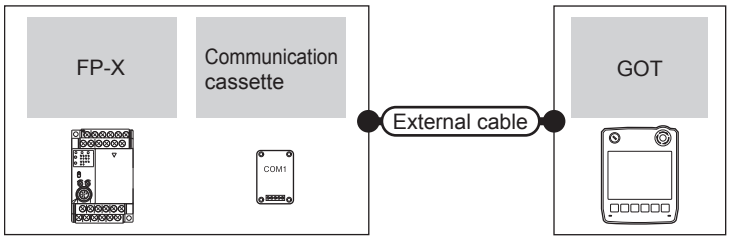

PLC		Communication cassette*1	External cable	GOT model	Total distance	Number of connectable equipment
Model	Communication type					
FP-X	RS-232	AFPX-COM1 (RS232C one channel type)	GT11H-C30(3m) GT11H-C60(6m) User preparing RS232 connection diagram 14)	GT14 Handy	6m	1 GOT for 1 PLC
		AFPX-COM2*2 (RS232C two channel type)	GT11H-C30(3m) GT11H-C60(6m) User preparing RS232 connection diagram 17)	GT14 Handy	6m	
	RS-422	AFPX-COM3 (RS485/RS422 one channel type)	GT11H-C30(3m) GT11H-C60(6m) GT11H-C100(10m) User preparing RS422 connection diagram 3)	GT14 Handy	13m	
	RS-232	AFPX-COM4*2 (RS485 one channel and RS232C one channel mixed type)	GT11H-C30(3m) GT11H-C60(6m) User preparing RS232 connection diagram 20)	GT14 Handy	6m	

*1 Product manufactured by Panasonic Industrial Devices SUNX Co., Ltd. For details of this product, contact Panasonic Industrial Devices SUNX Co., Ltd.

*2 To connect C30 and C60, USB port may set at the COM2 port on AFPX-COM2 and AFPX-COM4. In this case, set the COM2 port to RS232C.

44.3 Connection Diagram

The following diagram shows the connection between the GOT and the PLC.

44.3.1 RS-232 cable

■ Connection diagram

RS232 connection diagram 1)

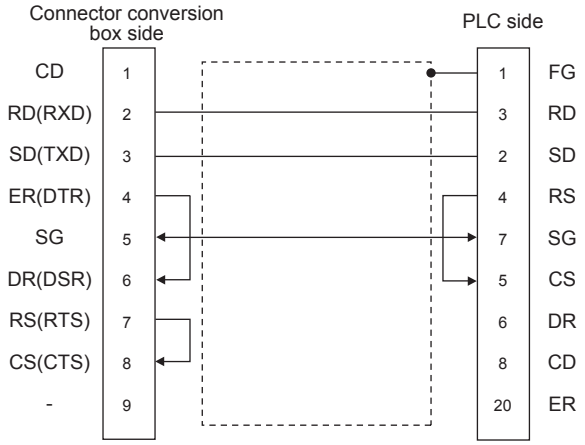

RS232 connection diagram 2)

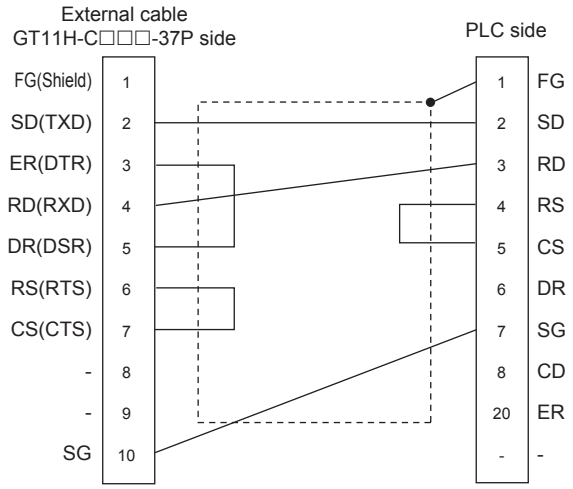

RS232 connection diagram 3)

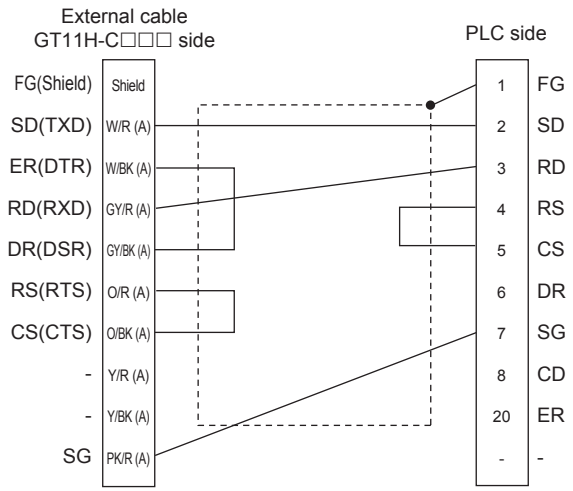

RS232 connection diagram 4)

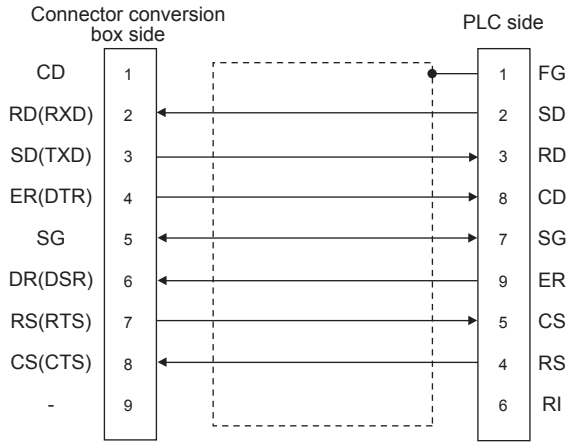

RS232 connection diagram 5)

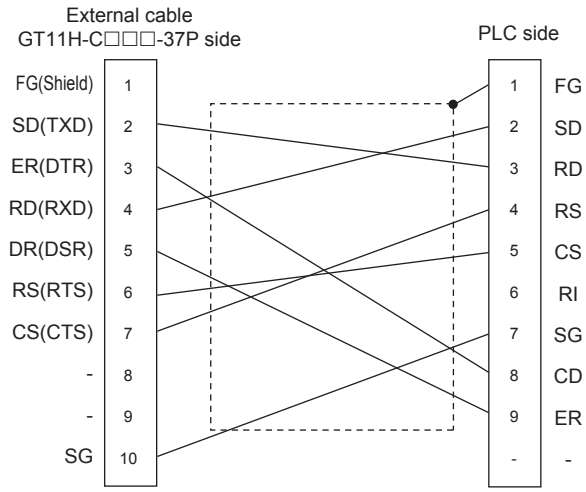

RS232 connection diagram 6)

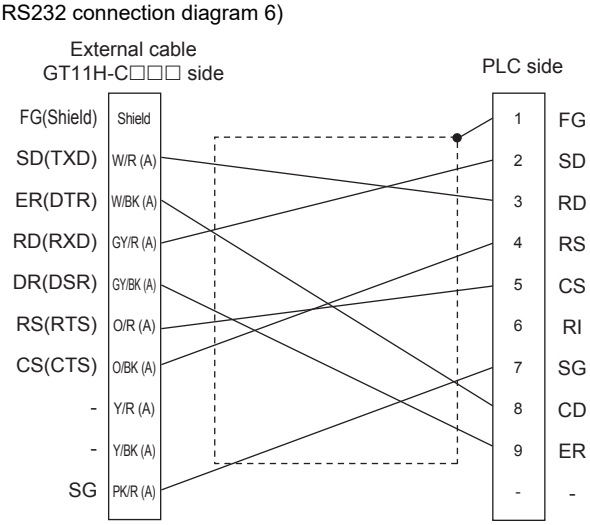

RS232 connection diagram 7)

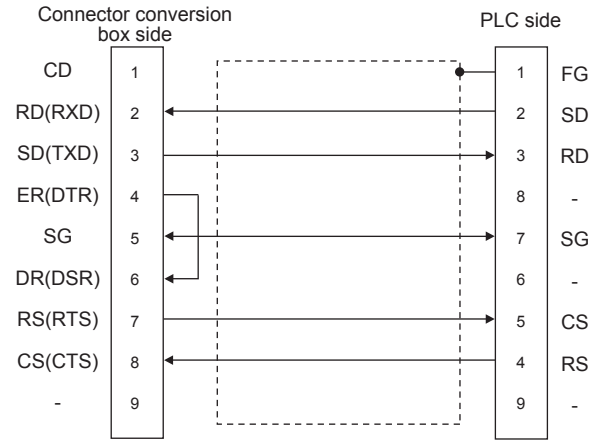

RS232 connection diagram 8)

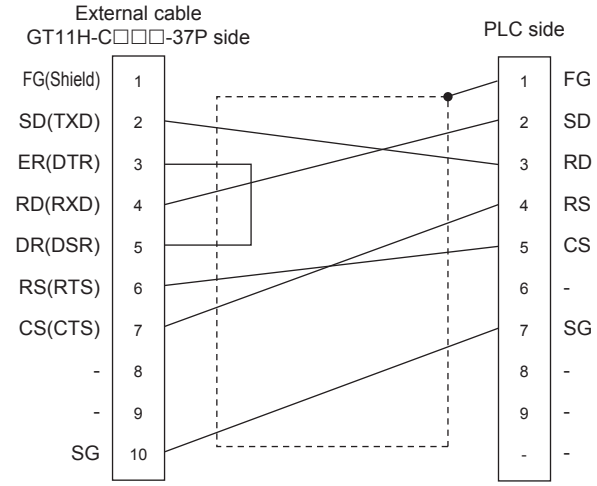

RS232 connection diagram 9)

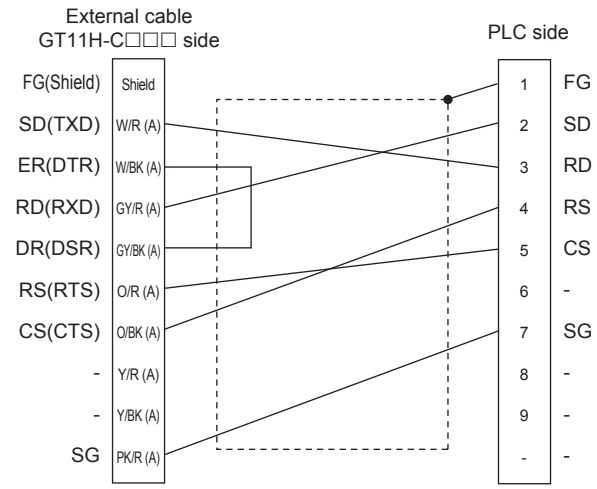

RS232 connection diagram 10)

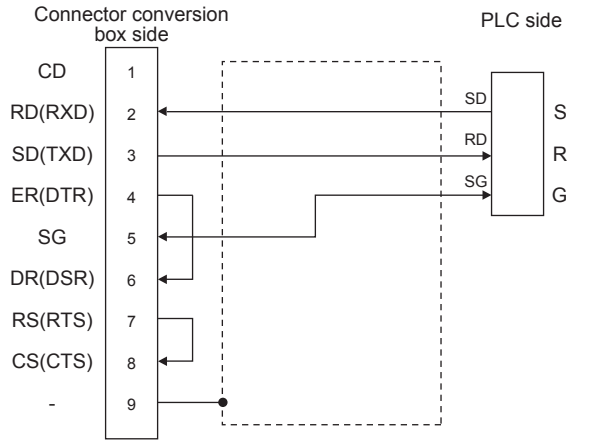

RS232 connection diagram 11)

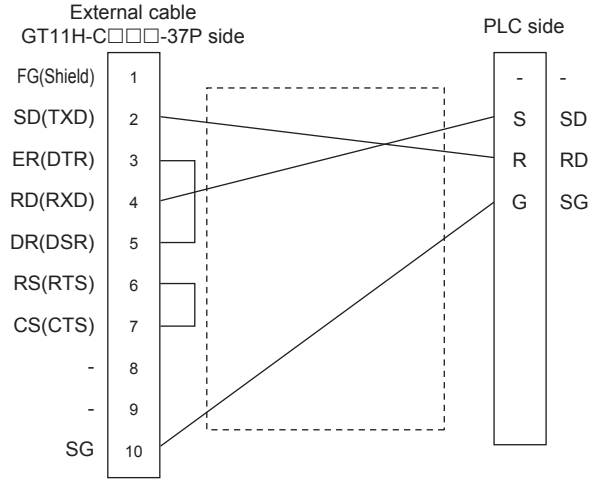

RS232 connection diagram 12)

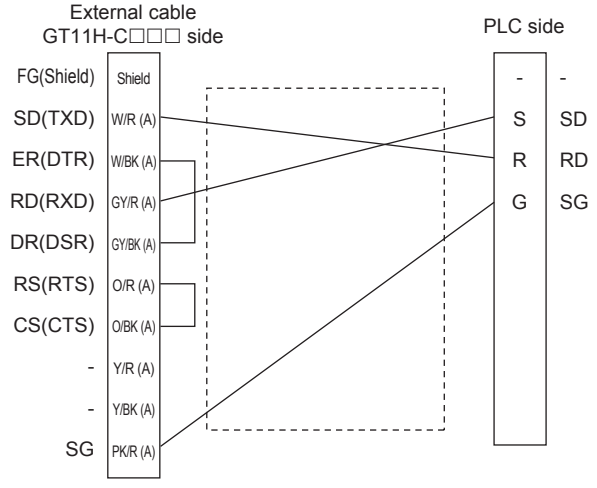

RS232 connection diagram 13)

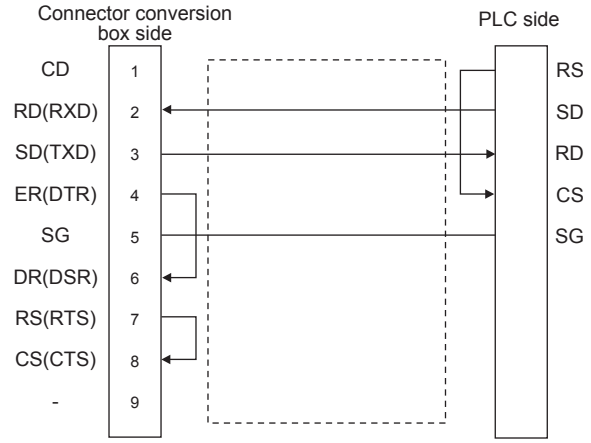

RS232 connection diagram 14)

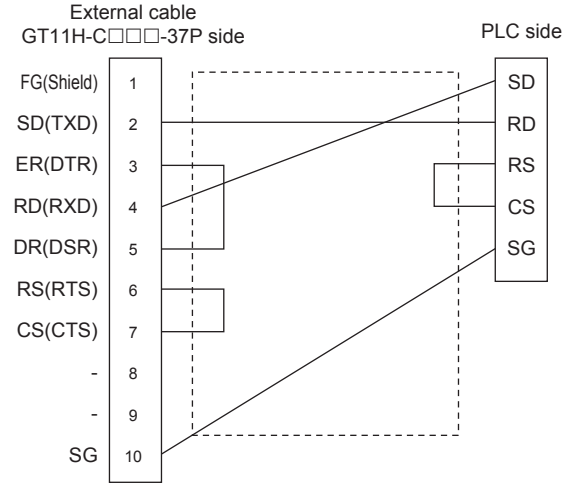

RS232 connection diagram 15)

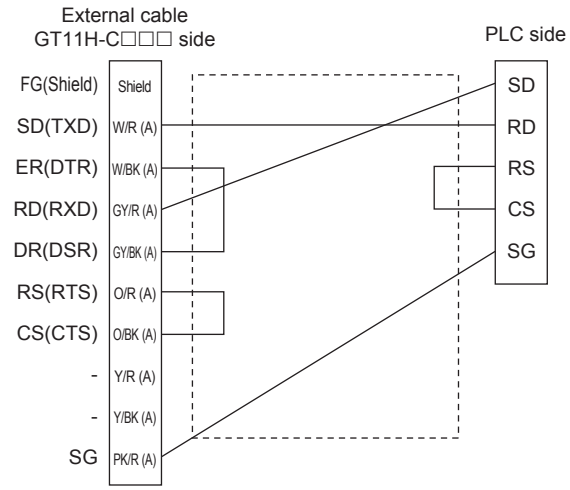

RS232 connection diagram 16)

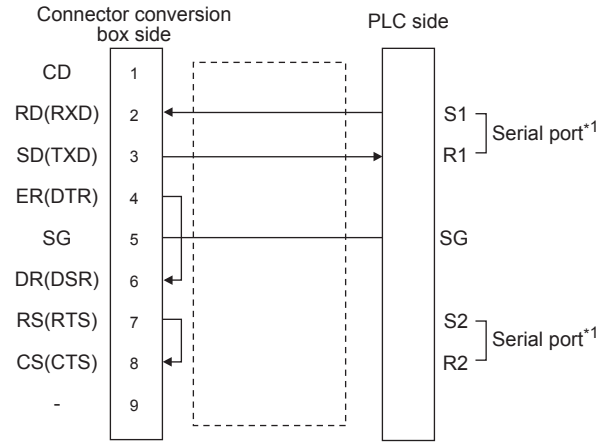

*1 PANASONIC PLC Side has two serial ports. S1 and R1, S2 and R2 constitute the serial port, respectively. Use one of the serial ports.

RS232 connection diagram 17)

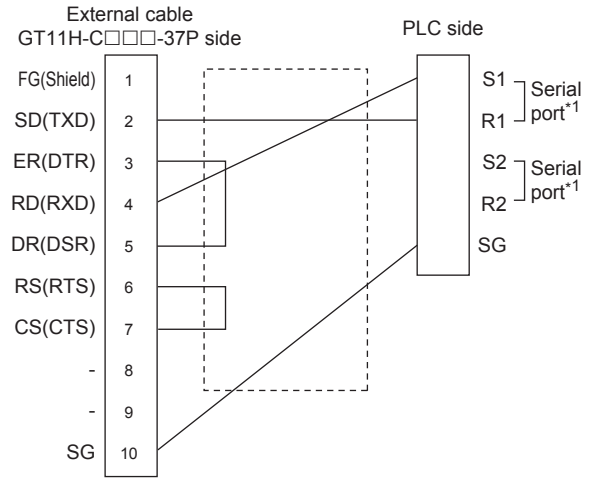

*1 PANASONIC PLC Side has two serial ports. S1 and R1, S2 and R2 constitute the serial port, respectively. Use one of the serial ports.

RS232 connection diagram 18)

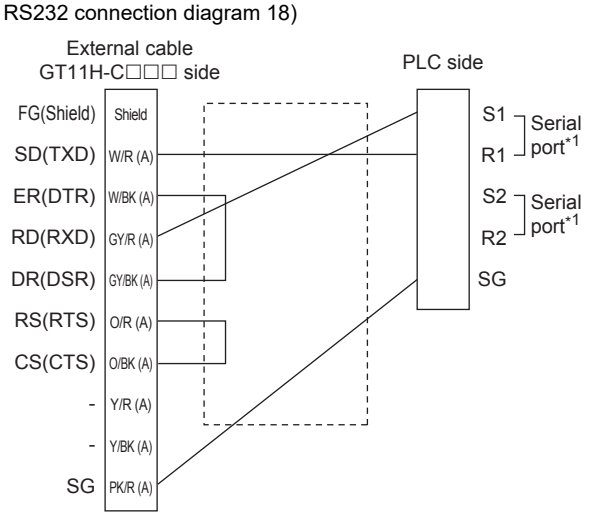

*1 PANASONIC PLC Side has two serial ports. S1 and R1, S2 and R2 constitute the serial port, respectively. Use one of the serial ports.

RS232 connection diagram 19)

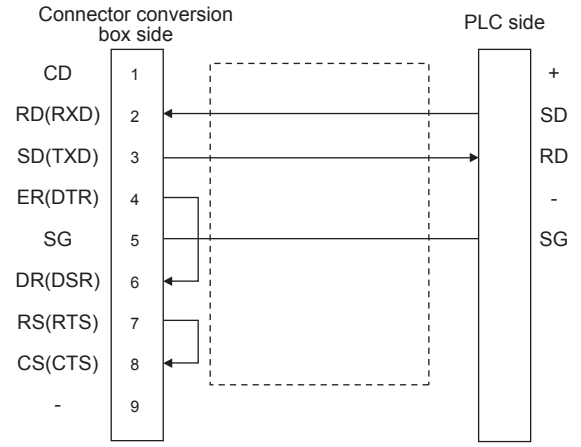

RS232 connection diagram 20)

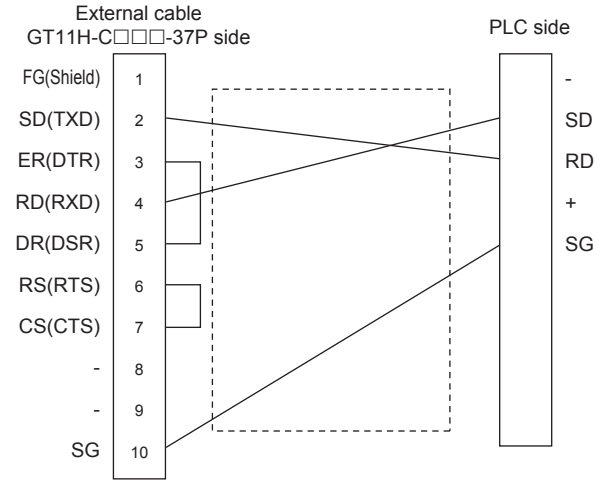

RS232 connection diagram 21)

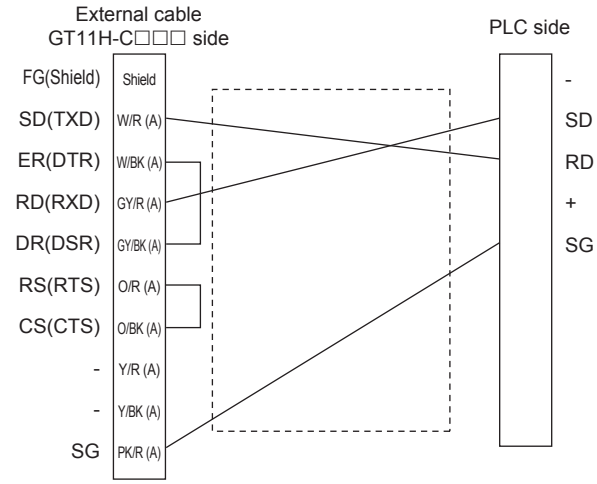

RS232 connection diagram 22)

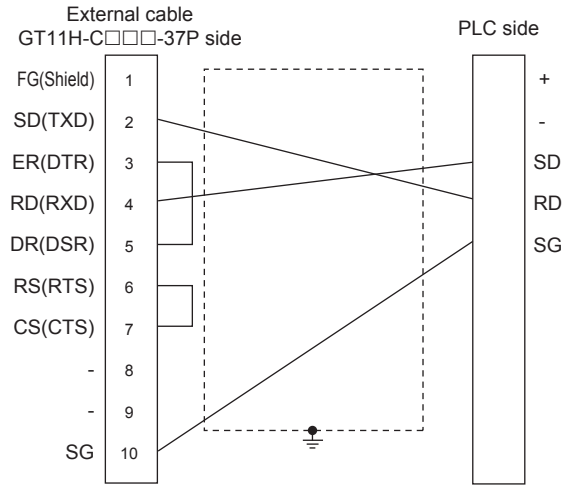

RS232 connection diagram 23)

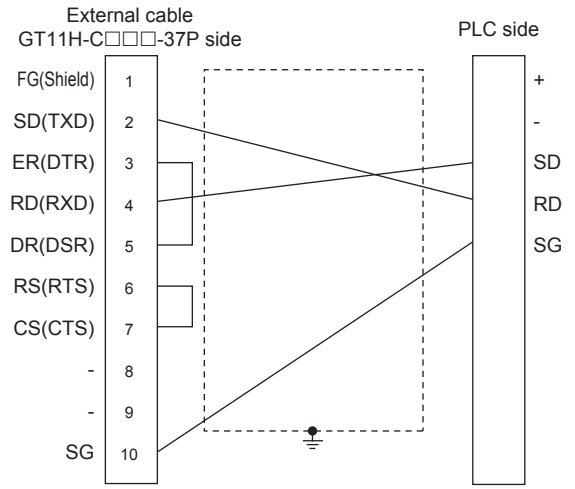

RS232 connection diagram 24)

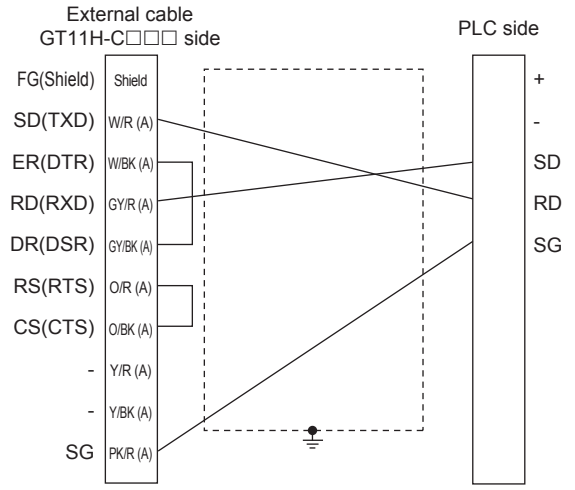

RS232 connection diagram 25)

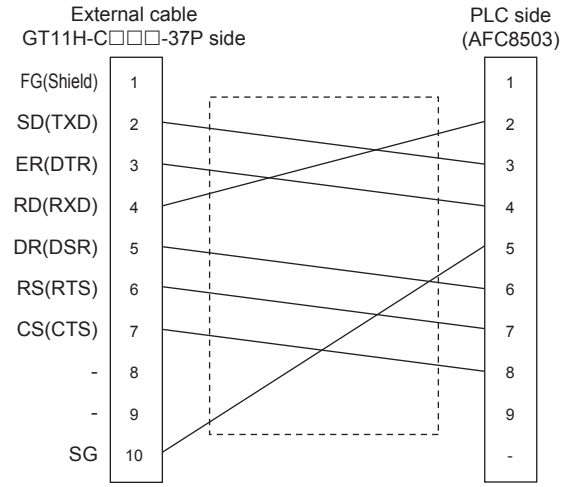

RS232 connection diagram 26)

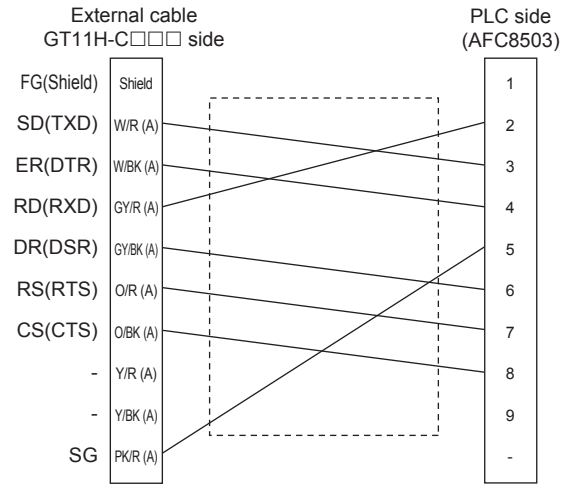

■ Precautions when preparing a cable

(1) Cable length
The total distance (between the GOT and a controller) of RS-232 cable must be 6m or less. The length of the cable must be 3m or less with a transmission speed of 38400bps.

(2) Connector conversion box side connector
For the connector conversion box side connector, refer to the following.

☞ 6.6 Connector Conversion Box

(3) External cable side connector
For the connector specifications of the external cable side, refer to the following.

☞ 8.2 External Cable, Relay Cable

(4) PANASONIC INDUSTRIAL DEVICES SUNX PLC side connector
Use the connector applicable to the PANASONIC INDUSTRIAL DEVICES SUNX PLC.
For details, refer to the PANASONIC INDUSTRIAL DEVICES SUNX PLC user's manual.

44.3.2 RS-422 cable

■ Connection diagram

RS422 connection diagram 1)

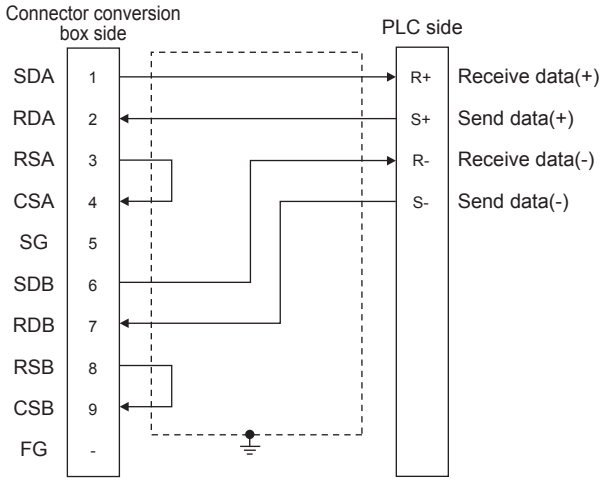

RS422 connection diagram 2)

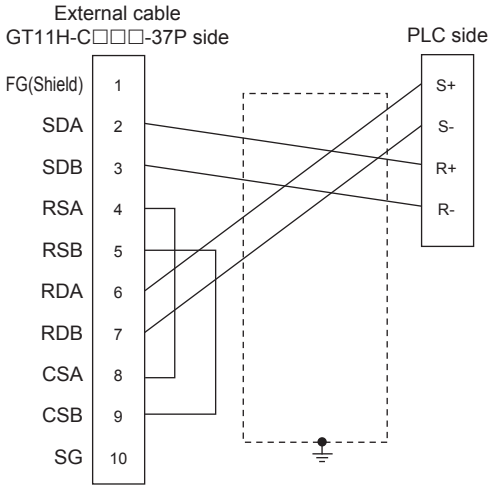

RS422 connection diagram 3)

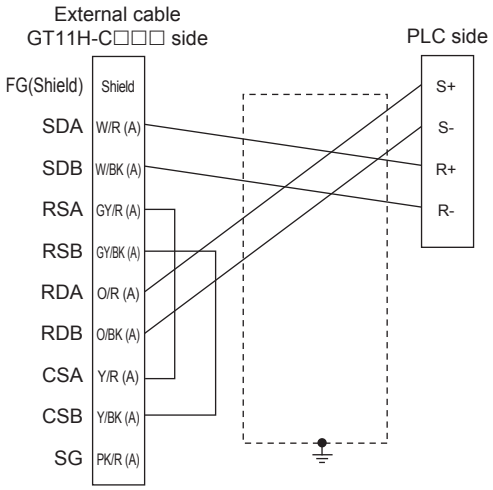

■ Precautions when preparing a cable

(1) Cable length
The total distance (between GOT and controllers) of RS-422 cable must be 13m or less.

(2) Connector conversion box side connector
For the connector conversion box side connector, refer to the following.

☞ 6.6 Connector Conversion Box

(3) External cable side connector
For the connector specifications of the external cable side, refer to the following.

☞ 8.2 External Cable, Relay Cable

(4) PANASONIC INDUSTRIAL DEVICES SUNX PLC side connector
Use the connector applicable to the PANASONIC INDUSTRIAL DEVICES SUNX PLC.
For details, refer to the PANASONIC INDUSTRIAL DEVICES SUNX PLC user's manual.

44.4 GOT Side Settings

44.4.1 Setting communication interface (Communication settings)

Set the channel of the equipment connected to the GOT.

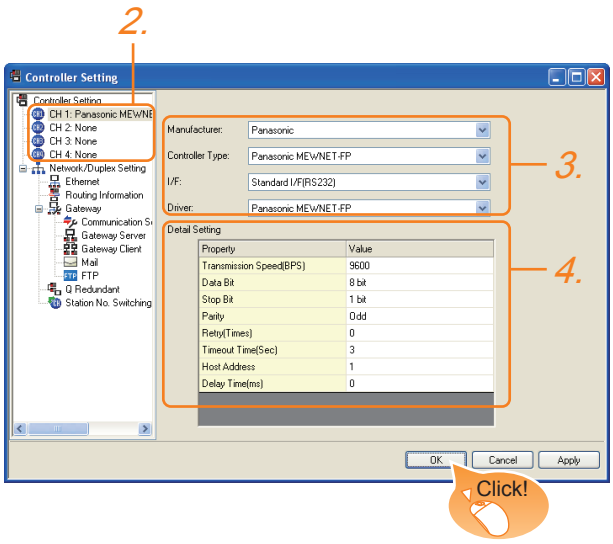

1. Select [Common] → [Controller Setting] from the menu.
2. The Controller Setting window is displayed. Select the channel to be used from the list menu.
3. Set the following items.
   - Manufacturer: Panasonic
   - Controller Type: Panasonic MEWNET-FP
   - I/F: Interface to be used
   - Driver: Panasonic MEWNET-FP
4. The detailed setting is displayed after Manufacturer, Controller Type, I/F, and Driver are set.
   Make the settings according to the usage environment.
   ☞ 44.4.2 Communication detail settings

Click the [OK] button when settings are completed.

POINT

The settings of connecting equipment can be confirmed in [I/F Communication Setting].
For details, refer to the following.
☞ 18.1.2 I/F communication setting

44.4.2 Communication detail settings

Make the settings according to the usage environment.

Item	Description	Range
Transmission Speed	Set this item when change the transmission speed used for communication with the connected equipment. (Default: 9600bps)	4800bps, 9600bps, 19200bps, 38400bps, 57600bps, 115200bps
Data Bit	Set this item when change the data length used for communication with the connected equipment. (Default: 8bit)	7bit/8bit
Retry	Set the number of retries to be performed when a communication timeout occurs. When receiving no response after retries, the communication times out. (Default: 0time)	0 to 5times
Timeout Time	Set the time period for a communication to time out. (Default: 3sec)	3 to 30sec
Host Address	Specify the host address (station No. of the PLC to which the GOT is connected) in the network of the GOT. (Default: 1)	1 to 31
Delay Time	Set this item to adjust the transmission timing of the communication request from the GOT. (Default: 0ms)	0 to 300 (ms)

POINT

(1) Communication interface setting by Utility
The communication interface setting can be changed on the Utility's [Communication setting] after writing [Communication Settings] of project data.
For details on the Utility, refer to the following manual.
☞ 11. COMMUNICATION INTERFACE SETTING (COMMUNICATION SETTING)

(2) Precedence in communication settings
When settings are made by GT Designer3 or the Utility, the latest setting is effective.

44.5 PLC Side Setting

POINT

PANASONIC INDUSTRIAL DEVICES SUNX PLC

For details of the PANASONIC INDUSTRIAL DEVICES SUNX PLC, refer to the following manual.

☞ PANASONIC INDUSTRIAL DEVICES SUNX PLC user's Manual

■ Connecting to the tool port of the PLC CPU

Item	Set value
Transmission speed*1	4800bps, 9600bps, 19200bps, 38400bps, 57600bps, 115200bps
Data bit	7bit, 8bit
Stop bit	1bit
Parity bit	Odd
Modem connection	No
Unit No.	1

*1 Indicates only the transmission speeds that can be set on the GOT side.
Set the same transmission speed of the GOT.
The setting range varies with the connected PLC.

■ Connecting to the RS232C and COM port of the PLC CPU

Item	Set value
Transmission speed*1	4800bps, 9600bps, 19200bps, 38400bps, 57600bps, 115200bps
Data bit	7bit, 8bit
Stop bit	1bit
Parity bit	Odd
Modem connection	No
Serial port action selection*2	1 (Computer link)
Unit No.	1

*1 Indicates only the transmission speeds that can be set on the GOT side.
Set the same transmission speed of the GOT.
The setting range varies with the connected PLC.
*2 Set when connecting to FP0, FP1, FP2 or FP-M.

■ Connecting to the computer communication unit

Item	Set value
Transmission speed*1	4800bps, 9600bps, 19200bps
Data bit	7bit, 8bit
Stop bit	1bit
Parity bit	Odd
Parity check	Enable
Control signal	Invalidate CS, CD

*1 Indicates only the transmission speeds that can be set on the GOT side.
Set the same transmission speed of the GOT.
The setting range varies with the connected PLC.

■ Connecting to the communication cassette

(1) Communication settings

Set the communication settings for the COM 1 port and COM2 port to connect GOT.

Item	Set value
Communication mode	Computer link
Transmission speed*1	4800bps, 9600bps, 19200bps, 38400bps, 57600bps, 115200bps
Modem connection	No
Data bit	7bit, 8bit
Parity check	Odd
Stop bit	1bit
Unit No.	1
Port selection*2	Communication cassette

*1 Indicates only the transmission speeds that can be set on the GOT side.
Set the same transmission speed of the GOT.
*2 Set the COM2 port only.

(2) Switch setting on the Communication cassette (AFPX-COM3)

Set the switch on the back.

Switch No.	Setting	Contents of setting
1	OFF	RS422
2	OFF	
3	OFF	
4	OFF	Terminating resistor OFF

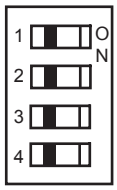

44.6 Device Range that Can Be Set

For details on the device range of controllers that can be used on GT14 Handy, refer to the following manuals.

☞ GT Designer3 Version1 Screen Design Manual (Fundamentals)

☞ GOT1000 Series Connection Manual (Non-Mitsubishi Products 1) for GT Works3

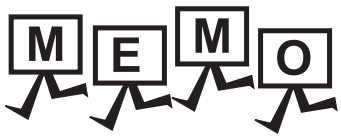
MEMO

45. CONNECTION TO HITACHI IES PLC

45.1 Connectable Model List

The following table shows the connectable models.

Series	Model	Clock	Communication type	GT14 Handy	Refer to
Large-sized H Series	H-302	○	RS-232 RS-422	○	45.2.1
	H-702				
	H-1002				
	H-2002				
	H-4010				
	H-300	×			
	H-700				
	H-2000				
H-200 to 252 Series	H-200	○	RS-232	○	45.2.2
	H-250				
	H-252				
	H-252B				
	H-252C				
H series board type	H-20DR	○	RS-232	○	45.2.2
	H-28DR				
	H-40DR				
	H-64DR				
	H-20DT				
	H-28DT				
	H-40DT				
	H-64DT				
	HL-40DR				
	HL-64DR				
EH-150 series	EH-CPU104	×	RS-232	○	45.2.2
	EH-CPU208	○			
	EH-CPU308				
	EH-CPU316				
	EH-CPU516				
	EH-CPU548				

45.2 System Configuration

45.2.1 Connection to large-sized H series

Communication driver
· HITACHI HIDIC H
· HITACHI HIDIC H (Protocol2)

To use "transmission control procedure 2" as a protocol, select "HITACHI HIDIC H (Protocol2)" as a communication driver.

(1) When using the connector conversion box

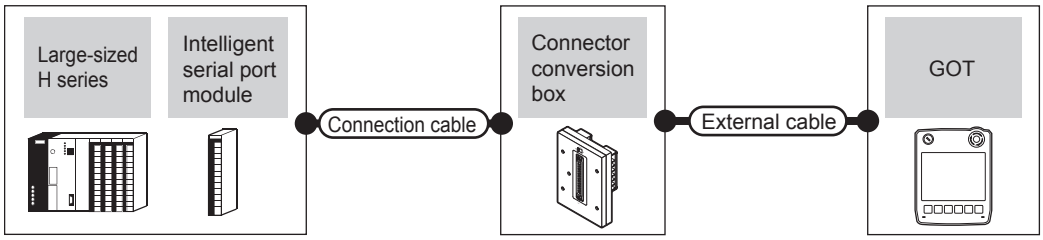

PLC			Connection cable	Connector conversion box	External cable	GOT model	Total distance	Number of connectable equipment
Model	Intelligent serial port module*1	Communication type	Cable model Connection diagram number					
H-302*2 H-702*2 H-1002*2 H-2002*2 H-300 H-700 H-2000	-	RS-232	GT09-C30R20401-15P(3m) or User preparing RS232 connection diagram 1)	GT11H-CNB-37S	GT11H-C30-37P(3m)	GT14 Handy	6m	1 GOT for 1 PLC
H-4010	-	RS-232	• Specified transmission speed: 4800bps GT09-C30R20401-15P(3m) or User preparing RS232 connection diagram 1) • Specified transmission speed: 19200bps GT09-C30R20402-15P(3m) or User preparing RS232 connection diagram 4) • Specified transmission speed: 38400bps*3 GT09-C30R20402-15P(3m) or User preparing RS232 connection diagram 4) • Transmission speed other than the above GT09-C30R20401-15P(3m) or User preparing RS232 connection diagram 1) GT09-C30R20402-15P(3m) or User preparing RS232 connection diagram 4)	GT11H-CNB-37S	GT11H-C30-37P(3m)	GT14 Handy	6m	
H-302 H-702 H-1002 H-2002 H-4010 H-300 H-700 H-2000	COMM-H COMM-2H	RS-232	GT09-C30R20401-15P(3m) or User preparing RS232 connection diagram 1)	GT11H-CNB-37S	GT11H-C30-37P(3m)	GT14 Handy	6m	1 GOT for 1 intelligent serial port module
		RS-422	GT09-C30R40401-7T(3m) GT09-C100R40401-7T(10m) or User preparing RS422 connection diagram 1)	GT11H-CNB-37S	GT11H-C30-37P(3m) GT11H-C60-37P(6m) GT11H-C100-37P(10m)	GT14 Handy	13m	

*1 Product manufactured by HITACHI Industrial Equipment Systems Co., Ltd. For details of this product, contact HITACHI Industrial Equipment Systems Co., Ltd.
*2 Connect to the peripheral port of the CPU module.
*3 Can be specified with the CPU software of revision "J" or later.

(2) When using the external cable (GT11H-C□□□-37P)

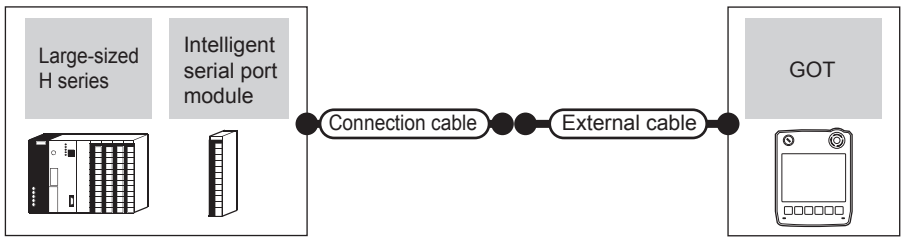

PLC			Connection cable	External cable	GOT model	Total distance	Number of connectable equipment
Model	Intelligent serial port module*1	Communication type	Cable model Connection diagram number				
H-302*2 H-702*2 H-1002*2 H-2002*2 H-300 H-700 H-2000	-	RS-232	User preparing RS232 connection diagram 2)	GT11H-C30-37P(3m)	GT14 Handy	6m	1 GOT for 1 PLC
H-4010	-	RS-232	• Specified transmission speed: 4800bps User preparing RS232 connection diagram 2) • Specified transmission speed: 19200bps User preparing RS232 connection diagram 5) • Specified transmission speed: 38400bps*3 User preparing RS232 connection diagram 5) • Transmission speed other than the above User preparing RS232 connection diagram 2) User preparing RS232 connection diagram 5)	GT11H-C30-37P(3m)	GT14 Handy	6m	
H-302 H-702 H-1002 H-2002 H-4010 H-300 H-700 H-2000	COMM-H COMM-2H	RS-232	User preparing RS232 connection diagram 2)	GT11H-C30-37P(3m)	GT14 Handy	6m	1 GOT for 1 intelligent serial port module
		RS-422	User preparing RS422 connection diagram 2)	GT11H-C30-37P(3m) GT11H-C60-37P(6m) GT11H-C100-37P(10m)	GT14 Handy	13m	

*1 Product manufactured by HITACHI Industrial Equipment Systems Co., Ltd. For details of this product, contact HITACHI Industrial Equipment Systems Co., Ltd.

*2 Connect to the peripheral port of the CPU module.

*3 Can be specified with the CPU software of revision "J" or later.

(3) When using the external cable (GT11H-C□□□)

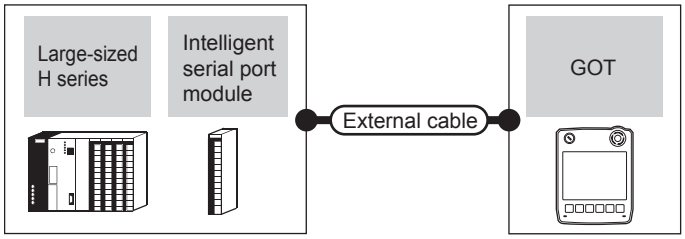

PLC			External cable	GOT model	Total distance	Number of connectable equipment
Model	Intelligent serial port module*1	Communication type				
H-302*2 H-702*2 H-1002*2 H-2002*2 H-300 H-700 H-2000	-	RS-232	GT11H-C30(3m) GT11H-C60(6m) User preparing RS232 connection diagram 3)	GT14 Handy	6m	1 GOT for 1 PLC
H-4010	-	RS-232	• Specified transmission speed: 4800bps GT11H-C30(3m) GT11H-C60(6m) User preparing RS232 connection diagram 3) • Specified transmission speed: 19200bps GT11H-C30(3m) GT11H-C60(6m) User preparing RS232 connection diagram 6) • Specified transmission speed: 38400bps*3 GT11H-C30(3m) GT11H-C60(6m) User preparing RS232 connection diagram 6) • Transmission speed other than the above GT11H-C30(3m) GT11H-C60(6m) User preparing RS232 connection diagram 3) User preparing RS232 connection diagram 6)	GT14 Handy	6m	
H-302 H-702 H-1002 H-2002 H-4010 H-300 H-700 H-2000	COMM-H COMM-2H	RS-232	GT11H-C30(3m) GT11H-C60(6m) User preparing RS232 connection diagram 3)	GT14 Handy	6m	1 GOT for 1 intelligent serial port module
		RS-422	GT11H-C30(3m) GT11H-C60(6m) GT11H-C100(10m) User preparing RS422 connection diagram 3)	GT14 Handy	13m	

*1 Product manufactured by HITACHI Industrial Equipment Systems Co., Ltd. For details of this product, contact HITACHI Industrial Equipment Systems Co., Ltd.

*2 Connect to the peripheral port of the CPU module.

*3 Can be specified with the CPU software of revision "J" or later.

45.2.2 Connecting to H-200 to 252 series, H series board type or EH-150 series

Communication driver
· HITACHI HIDIC H
· HITACHI HIDIC H (Protocol2)

To use "transmission control procedure 2" as a protocol, select "HITACHI HIDIC H (Protocol2)" as a communication driver.

(1) When using the connector conversion box

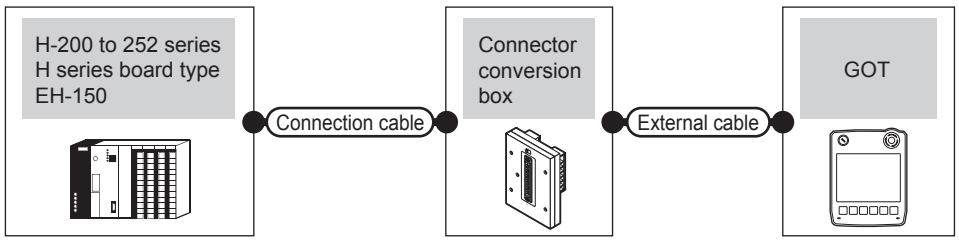

PLC		Connection cable	Connector conversion box	External cable	GOT model	Total distance	Number of connectable equipment
Model	Communication type	Cable model Connection diagram number					
H-200*1, H-250*1 H-252*1, H-252B*1 H-20DR, H-28DR H-40DR, H-64DR H-20DT, H-28DT H-40DT, H-64DT HL-40DR, HL-64DR	RS-232	GT09-C30R20401-15P(3m) or User preparing RS232 connection diagram 1)	GT11H-CNB-37S	GT11H-C30-37P(3m)	GT14 Handy	6m	1 GOT for 1 PLC
H-252C*1*2	RS-232	• Specified transmission speed: 4800bps GT09-C30R20401-15P(3m) or User preparing RS232 connection diagram 1) • Specified transmission speed: 19200bps GT09-C30R20402-15P(3m) or User preparing RS232 connection diagram 4) • Transmission speed other than the above GT09-C30R20401-15P(3m) or User preparing RS232 connection diagram 1) GT09-C30R20402-15P(3m) or User preparing RS232 connection diagram 4)			GT14 Handy	6m	
EH-CPU104*3 EH-CPU208*3 EH-CPU308*3 EH-CPU316*3 EH-CPU516*3 EH-CPU548*3	RS-232	• Specified transmission speed: 4800bps GT09-C30R20401-15P(3m) or User preparing RS232 connection diagram 1) • Specified transmission speed: 19200bps GT09-C30R20402-15P(3m) or User preparing RS232 connection diagram 4) • Specified transmission speed: 38400bps GT09-C30R20402-15P(3m) or User preparing RS232 connection diagram 4) • Transmission speed other than the above GT09-C30R20401-15P(3m) or User preparing RS232 connection diagram 1) GT09-C30R20402-15P(3m) or User preparing RS232 connection diagram 4)			GT14 Handy	6m	

*1 To connect to H-200 to 252 series, connect to the peripheral port of the CPU module.
*2 To connect to serial port 2 of H-252C (CPU22-02HC, CPE22-02HC), the round connector (8 pins)/D-sub connector (15 pins) conversion cable (CNCOM-05 made by HITACHI Industrial Equipment Systems Co., Ltd.) is necessary.
*3 To connect to the EH-150 series, connect to the serial port of the CPU module.
The module jack (8 pins)/D-sub connector (15 pins) conversion cable (EHRS05 made by HITACHI Industrial Equipment Systems Co., Ltd.) is necessary.

(2) When using the external cable (GT11H-C□□□-37P)

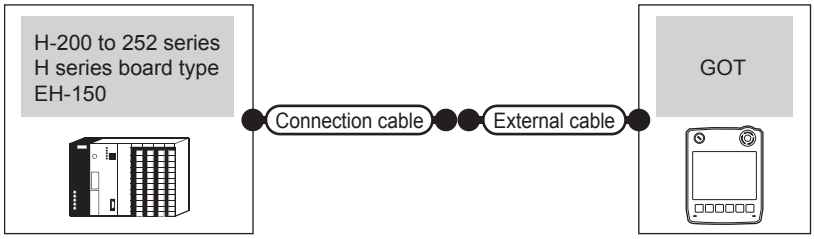

PLC		Connection cable	External cable	GOT model	Total distance	Number of connectable equipment
Model	Communication type	Cable model Connection diagram number				
H-200[*1], H-250[*1] H-252[*1], H-252B[*1] H-20DR, H-28DR H-40DR, H-64DR H-20DT, H-28DT H-40DT, H-64DT HL-40DR, HL-64DR	RS-232	User preparing RS232 connection diagram 1)	GT11H-C30-37P(3m)	GT14 Handy	6m	1 GOT for 1 PLC
H-252C[*1*2]	RS-232	• Specified transmission speed: 4800bps User preparing RS232 connection diagram 2) • Specified transmission speed: 19200bps User preparing RS232 connection diagram 5) • Transmission speed other than the above User preparing RS232 connection diagram 2) User preparing RS232 connection diagram 5)	GT11H-C30-37P(3m)	GT14 Handy	6m	
EH-CPU104[*3] EH-CPU208[*3] EH-CPU308[*3] EH-CPU316[*3] EH-CPU516[*3] EH-CPU548[*3]	RS-232	• Specified transmission speed: 4800bps User preparing RS232 connection diagram 2) • Specified transmission speed: 19200bps User preparing RS232 connection diagram 5) • Specified transmission speed: 38400bps User preparing RS232 connection diagram 5) • Transmission speed other than the above User preparing RS232 connection diagram 2) User preparing RS232 connection diagram 5)	GT11H-C30-37P(3m)	GT14 Handy	6m	

*1 To connect to H-200 to 252 series, connect to the peripheral port of the CPU module.

*2 To connect to serial port 2 of H-252C (CPU22-02HC, CPE22-02HC), the round connector (8 pins)/D-sub connector (15 pins) conversion cable (CNCOM-05 made by HITACHI Industrial Equipment Systems Co., Ltd.) is necessary.

*3 To connect to the EH-150 series, connect to the serial port of the CPU module.
The module jack (8 pins)/D-sub connector (15 pins) conversion cable (EHRS05 made by HITACHI Industrial Equipment Systems Co., Ltd.) is necessary.

(3) When using the external cable (GT11H-C□□□)

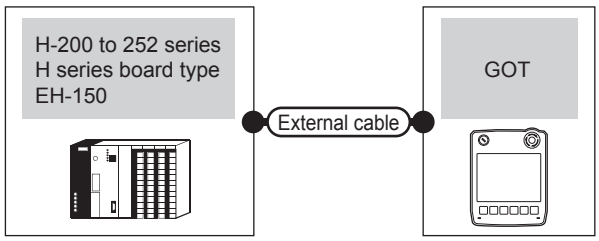

PLC		External cable	GOT model	Total distance	Number of connectable equipment
Model	Communication type				
H-200*1, H-250*1 H-252*1, H-252B*1 H-20DR, H-28DR H-40DR, H-64DR H-20DT, H-28DT H-40DT, H-64DT HL-40DR, HL-64DR	RS-232	GT11H-C30(3m) GT11H-C60(6m) User preparing RS232 connection diagram 3)	GT14 Handy	6m	1 GOT for 1 PLC
H-252C*1*2	RS-232	• Specified transmission speed: 4800bps GT11H-C30(3m) GT11H-C60(6m) User preparing RS232 connection diagram 3) • Specified transmission speed: 19200bps GT11H-C30(3m) GT11H-C60(6m) User preparing RS232 connection diagram 6) • Transmission speed other than the above GT11H-C30(3m) GT11H-C60(6m) User preparing RS232 connection diagram 3) User preparing RS232 connection diagram 6)	GT14 Handy	6m	
EH-CPU104*3 EH-CPU208*3 EH-CPU308*3 EH-CPU316*3 EH-CPU516*3 EH-CPU548*3	RS-232	• Specified transmission speed: 4800bps GT11H-C30(3m) GT11H-C60(6m) User preparing RS232 connection diagram 3) • Specified transmission speed: 19200bps GT11H-C30(3m) GT11H-C60(6m) User preparing RS232 connection diagram 6) • Specified transmission speed: 38400bps GT11H-C30(3m) GT11H-C60(6m) User preparing RS232 connection diagram 6) • Transmission speed other than the above GT11H-C30(3m) GT11H-C60(6m) User preparing RS232 connection diagram 3) User preparing RS232 connection diagram 6)	GT14 Handy	6m	

*1 To connect to H-200 to 252 series, connect to the peripheral port of the CPU module.

*2 To connect to serial port 2 of H-252C (CPU22-02HC, CPE22-02HC), the round connector (8 pins)/D-sub connector (15 pins) conversion cable (CNCOM-05 made by HITACHI Industrial Equipment Systems Co., Ltd.) is necessary.

*3 To connect to the EH-150 series, connect to the serial port of the CPU module.
The module jack (8 pins)/D-sub connector (15 pins) conversion cable (EHRS05 made by HITACHI Industrial Equipment Systems Co., Ltd.) is necessary.

45.3 Connection Diagram

The following diagram shows the connection between the GOT and the PLC.

45.3.1 RS-232 cable

■ Connection diagram

RS232 connection diagram 1)

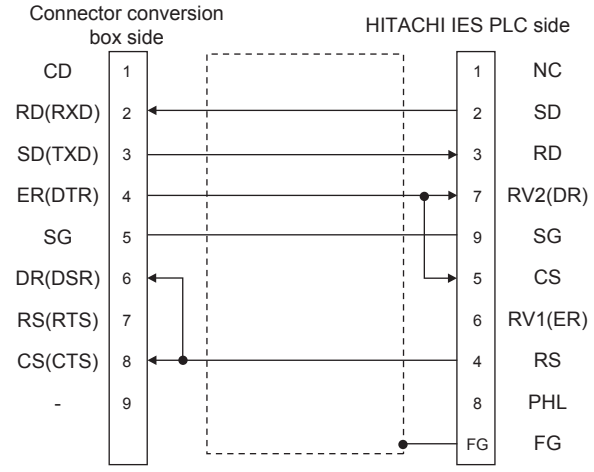

RS232 connection diagram 2)

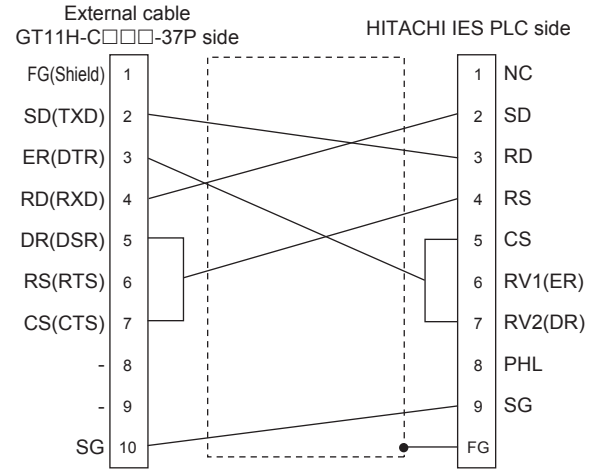

RS232 connection diagram 3)

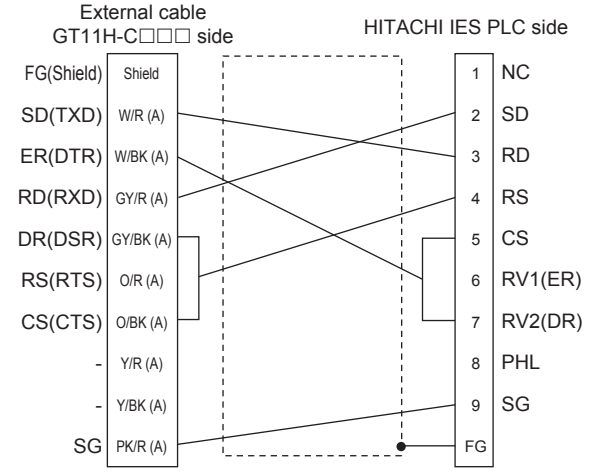

RS232 connection diagram 4)

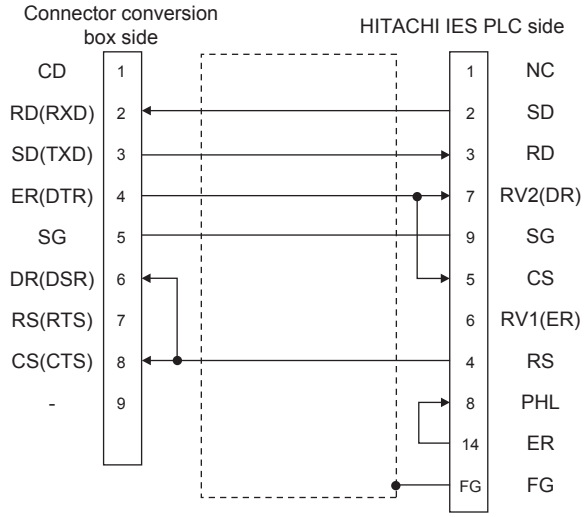

RS232 connection diagram 5)

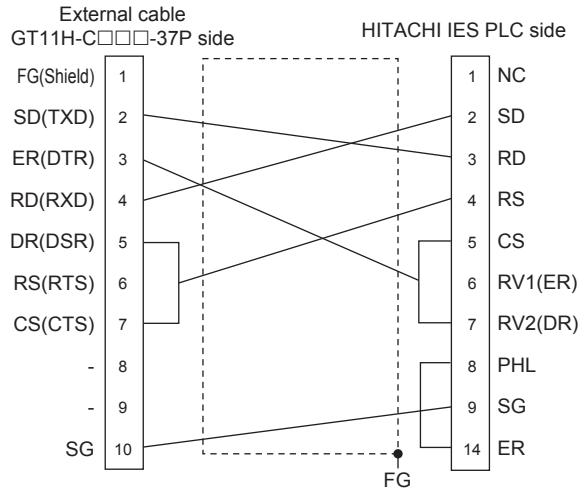

RS232 connection diagram 6)

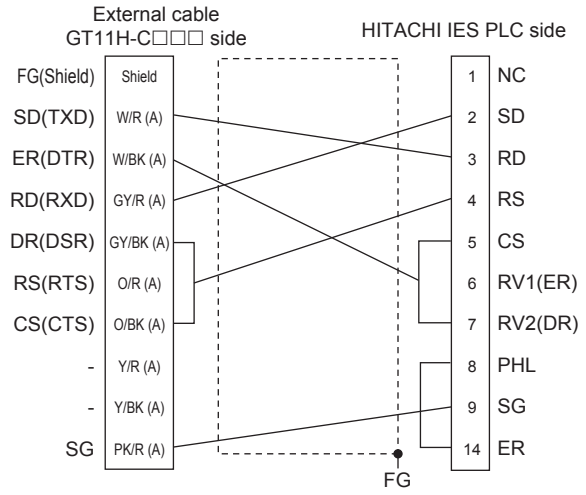

■ Precautions when preparing a cable

(1) Cable length
The total distance (between the GOT and a controller) of RS-232 cable must be 6m or less.

(2) Connector conversion box side connector
For the connector conversion box side connector, refer to the following.

☞ 6.6 Connector Conversion Box

(3) External cable side connector
For the connector specifications of the external cable side, refer to the following.

☞ 8.2 External Cable, Relay Cable

(4) HITACHI IES PLC side connector
Use the connector compatible with the HITACHI IES PLC side module.
For details, refer to the HITACHI IES PLC user's manual.

45.3.2 RS-422 cable

■ Connection diagram

RS422 connection diagram 1)

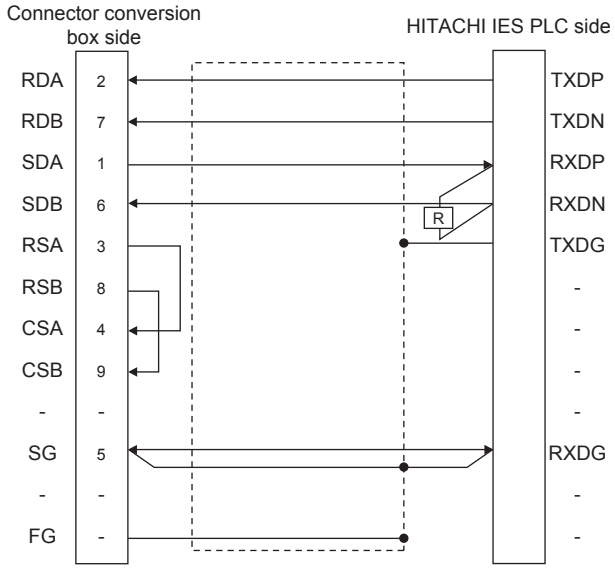

RS422 connection diagram 2)

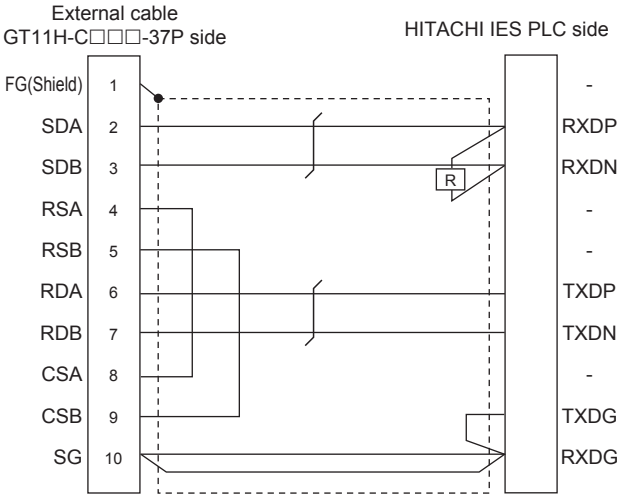

RS422 connection diagram 3)

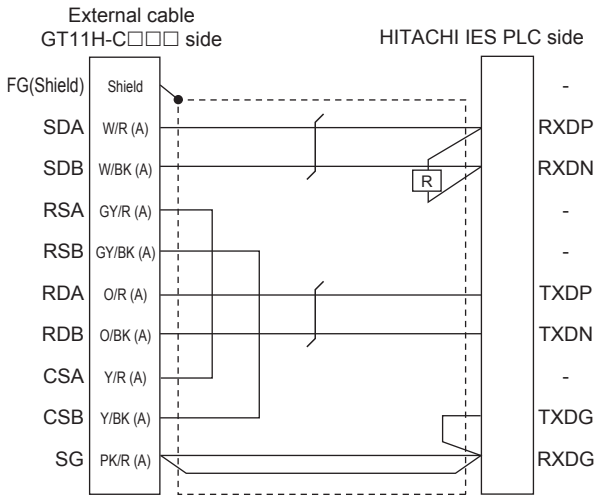

■ Precautions when preparing a cable

(1) Cable length
The total distance (between GOT and controllers) of RS-422 cable must be 13m or less.

(2) Connector conversion box side connector
For the connector conversion box side connector, refer to the following.

☞ 6.6 Connector Conversion Box

(3) External cable side connector
For the connector specifications of the external cable side, refer to the following.

☞ 8.2 External Cable, Relay Cable

(4) HITACHI IES PLC side connector
Use the connector compatible with the HITACHI IES PLC side module.
For details, refer to the HITACHI IES PLC user's manual.

■ Connecting terminating resistors

(1) HITACHI IES PLC side
When connecting an intelligent serial port module to a GOT, a terminating resistor has to be connected to the intelligent serial port module.

☞ HITACHI IES PLC user's Manual

45.4 GOT Side Settings

45.4.1 Setting communication interface (Communication settings)

Set the channel of the connected equipment.

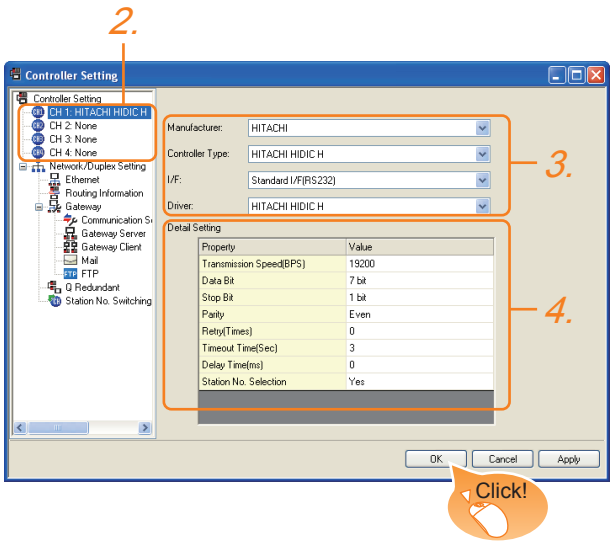

1. Select [Common] → [Controller Setting] from the menu.
2. The Controller Setting window is displayed. Select the channel to be used from the list menu.
3. Set the following items.
   - Manufacturer: HITACHI
   - Controller Type: HITACHI HIDIC H
   - I/F: Interface to be used
   - Driver: Set either of the followings.
     - HITACHI HIDIC H
     - HITACHI HIDIC H (Protocol2)
4. The detailed setting is displayed after Manufacturer, Controller Type, I/F, and Driver are set.
   Make the settings according to the usage environment.
   ☞ 45.4.2 Communication detail settings

Click the OK button when settings are completed.

POINT

The settings of connecting equipment can be confirmed in [I/F Communication Setting].
For details, refer to the following.
☞ 18.1.2 I/F communication setting

45.4.2 Communication detail settings

Make the settings according to the usage environment.

(1) HITACHI HIDIC H

Item	Description	Range
Transmission Speed	Set this item when change the transmission speed used for communication with the connected equipment. (Default: 19200bps)	4800bps, 9600bps, 19200bps, 38400bps
Data Bit	Set this item when change the data length used for communication with the connected equipment. (Default: 7bit)	7bit (fixed)
Stop Bit	Specify the stop bit length for communications. (Default: 1bit)	1bit (fixed)
Parity	Specify whether or not to perform a parity check, and how it is performed during communication. (Default: Even)	Even (fixed)
Retry	Set the number of retries to be performed when a communication error occurs. (Default: 0time)	0 to 5times
Timeout Time	Set the time period for a communication to time out. (Default: 3sec)	3 to 30sec
Delay Time	Set this item to adjust the transmission timing of the communication request from the GOT. (Default: 0ms)	0 to 300 (ms)
Station No. Selection	Specify whether to use the station No. during communication. If [Yes] is selected, the station No. is fixed to "0." (Default: Yes)	Yes or No

(2) HITACHI HIDIC H (Protocol2)

Item	Description	Range
Transmission Speed	Set this item when change the transmission speed used for communication with the connected equipment. (Default: 19200bps)	4800bps, 9600bps, 19200bps, 38400bps
Data Bit	Set this item when change the data length used for communication with the connected equipment. (Default: 7bit)	7bit (fixed)
Stop Bit	Specify the stop bit length for communications. (Default: 1bit)	1bit (fixed)
Parity	Specify whether or not to perform a parity check, and how it is performed during communication. (Default: Even)	Even (fixed)
Retry	Set the number of retries to be performed when a communication error occurs. (Default: 0time)	0 to 5times
Timeout Time	Set the time period for a communication to time out. (Default: 3sec)	3 to 30sec
Delay Time	Set this item to adjust the transmission timing of the communication request from the GOT. (Default: 0ms)	0 to 300 (ms)
Station No. Selection	Specify whether to use the station No. during communication. If [Yes] is selected, the station No. is fixed to "0." (Default: Yes)	Yes or No

POINT

(1) Communication interface setting by Utility
The communication interface setting can be changed on the Utility's [Communication setting] after writing [Communication Settings] of project data.
For details on the Utility, refer to the following manual.

11. COMMUNICATION INTERFACE SETTING (COMMUNICATION SETTING)

(2) Precedence in communication settings
When settings are made by GT Designer3 or the Utility, the latest setting is effective.

45.5 PLC Side Setting

POINT

HITACHI IES PLC

For details of the HITACHI IES PLC, refer to the following manual.

☞ HITACHI IES PLC user's Manual

■ Directly connecting to the CPU

Item	Set value
Transmission speed*1*2*3	4800bps, 9600bps, 19200bps, 38400bps
Station No.	0
Data bit	7bit
Stop bit	1bit
Parity bit	Even
Control method	DTR control
Communication	RS-232
Sum check	Enable
Protocol	transmission control procedure 1

*1 Indicates only the transmission speeds that can be set on the GOT side.
*2 Set the same transmission speed as that of the GOT side.
*3 The setting range varies with the connected PLC.

■ Connecting to the intelligent serial port module

(1) For transmission control procedure1

Item	Set value
Transmission speed	19200bps
Station No.	0
Data bit	7bit
Stop bit	1bit
Parity bit	Even
Control method	Disable
Communication	For RS-232 communication: RS-232 MODE switch 2 For RS-422 communication: RS-422 MODE switch 2
Sum check	Enable

(2) For transmission control procedure2

Item	Set value
Transmission speed	19200bps
Station No.	0
Data bit	7bits
Stop bit	1bit
Parity bit	Even
Control method	Disable
Communication	For RS-232 communication: RS-232 MODE switch 9 For RS-422 communication: RS-422 MODE switch 9
Sum check	Enable

45.6 Device Range that Can Be Set

For details on the device range of controllers that can be used on GT14 Handy, refer to the following manuals.

☞ GT Designer3 Version1 Screen Design Manual (Fundamentals)

☞ GOT1000 Series Connection Manual (Non-Mitsubishi Products 1) for GT Works3

46. CONNECTION TO HITACHI PLC

46.1 Connectable Model List

The following table shows the connectable models.

Series	Model	Clock	Communication type	GT14 Handy	Refer to
S10V	LQP510	○	RS-232 RS-422	○	46.2.1
	LQP520				
S10mini	LQP800	○	RS-232 RS-422	○	46.2.2
	LQP000				
	LQP010				
	LQP011				
	LQP120				

46.2 System Configuration

46.2.1 Connecting to S10V

Communication driver

HITACHI S10mini/S10V

(1) When using the connector conversion box

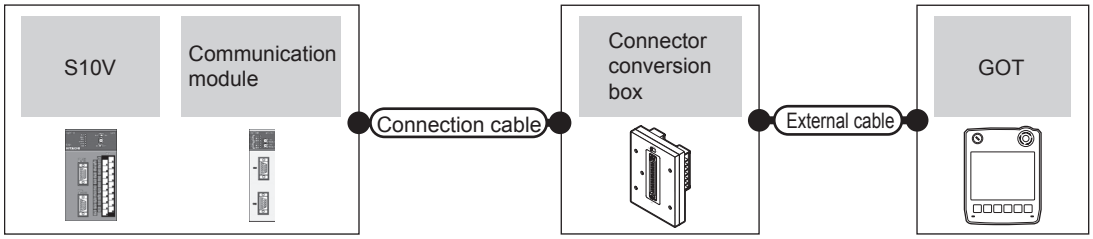

PLC			Connection cable	Connector conversion box	External cable	GOT model	Total distance	Number of connectable equipment
Model	Communication module*1	Communication type	Cable model Connection diagram number					
LQP510 LQP520	LQE560	RS-232	GT09-C30R21301-9S(3m) or User preparing RS232 connection diagram 1)	GT11H-CNB-37S	GT11H-C30-37P(3m)	GT14 Handy	6m	1 GOT for 1 communication module
	LQE565	RS-422	GT09-C30R41301-9S(3m) GT09-C100R41301-9S(10m) or User preparing RS422 connection diagram 1)	GT11H-CNB-37S	GT11H-C30-37P(3m) GT11H-C60-37P(6m) GT11H-C100-37P(10m)	GT14 Handy	13m	
LQP510	-	RS-422	GT09-C30R41301-9S(3m) GT09-C100R41301-9S(10m) or User preparing RS422 connection diagram 1)	GT11H-CNB-37S	GT11H-C30-37P(3m) GT11H-C60-37P(6m) GT11H-C100-37P(10m)	GT14 Handy	13m	1 GOT for 1 PLC

*1 Product manufactured by Hitachi, Ltd. For details of the product, contact Hitachi, Ltd.

(2) When using the external cable (GT11H-C□□□-37P)

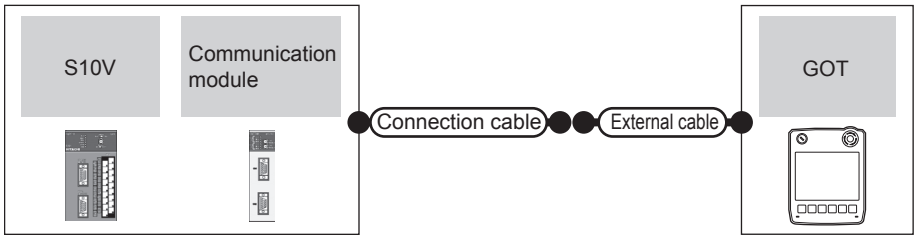

PLC			Connection cable	External cable	GOT model	Total distance	Number of connectable equipment
Model	Communication module*1	Communication type	Cable model Connection diagram number				
LQP510 LQP520	LQE560	RS-232	User preparing RS232 connection diagram 2)	GT11H-C30-37P(3m)	GT14 Handy	6m	1 GOT for 1 communication module
	LQE565	RS-422	User preparing RS422 connection diagram 2)	GT11H-C30-37P(3m) GT11H-C60-37P(6m) GT11H-C100-37P(10m)	GT14 Handy	13m	
LQP510	-	RS-422	User preparing RS422 connection diagram 2)	GT11H-C30-37P(3m) GT11H-C60-37P(6m) GT11H-C100-37P(10m)	GT14 Handy	13m	1 GOT for 1 PLC

*1 Product manufactured by Hitachi, Ltd. For details of the product, contact Hitachi, Ltd.

(3) When using the external cable (GT11H-C□□□)

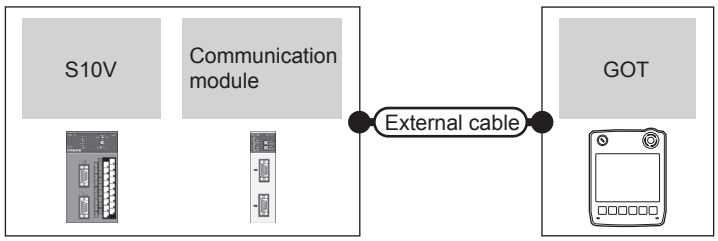

PLC			External cable	GOT model	Total distance	Number of connectable equipment
Model	Communication module*1	Communication type				
LQP510 LQP520	LQE560	RS-232	GT11H-C30(3m) GT11H-C60(6m) User preparing RS232 connection diagram 3)	GT14 Handy	6m	1 GOT for 1 communication module
	LQE565	RS-422	GT11H-C30(3m) GT11H-C60(6m) GT11H-C100(10m) User preparing RS422 connection diagram 3)	GT14 Handy	13m	
LQP510	-	RS-422	GT11H-C30(3m) GT11H-C60(6m) GT11H-C100(10m) User preparing RS422 connection diagram 3)	GT14 Handy	13m	1 GOT for 1 PLC

*1 Product manufactured by Hitachi, Ltd. For details of the product, contact Hitachi, Ltd.

46.2.2 Connecting to S10mini

Communication driver
HITACHI S10mini/S10V

(1) When using the connector conversion box

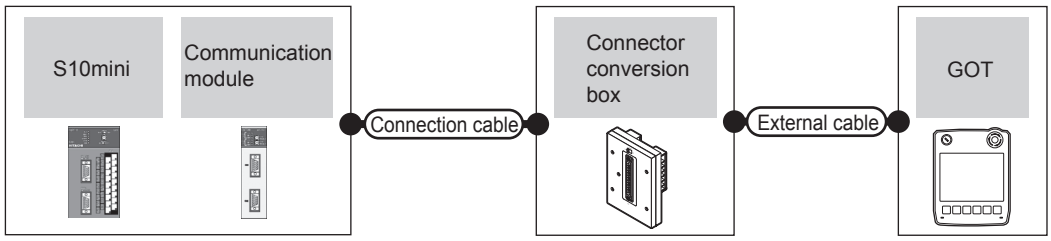

PLC			Connection cable	Connector conversion box	External cable	GOT model	Total distance	Number of connectable equipment
Series	Communication module*1	Communication type	Cable model Connection diagram number					
S10mini	LQE560 LQE060 LQE160	RS-232	GT09-C30R21301-9S(3m) or User preparing RS232 connection diagram 1)	GT11H-CNB-37S	GT11H-C30-37P(3m)	GT14 Handy	6m	1 GOT for 1 communication module
	LQE565 LQE165	RS-422	GT09-C30R41301-9S(3m) GT09-C100R41301-9S(10m) or User preparing RS422 connection diagram 1)	GT11H-CNB-37S	GT11H-C30-37P(3m) GT11H-C60-37P(6m) GT11H-C100-37P(10m)	GT14 Handy	13m	

*1 Product manufactured by Hitachi, Ltd. For details of the product, contact Hitachi, Ltd.

(2) When using the external cable (GT11H-C□□□-37P)

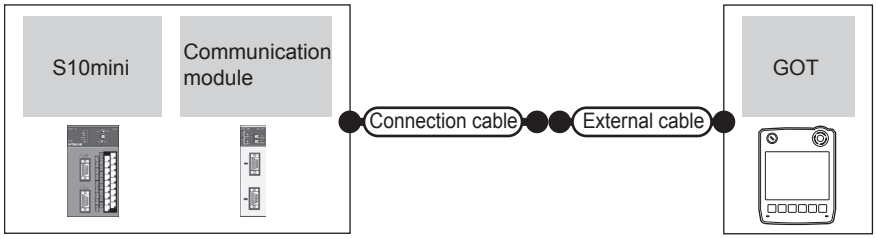

PLC			Connection cable	External cable	GOT model	Total distance	Number of connectable equipment
Series	Communication module*1	Communication type	Cable model Connection diagram number				
S10mini	LQE560 LQE060 LQE160	RS-232	User preparing RS232 connection diagram 2)	GT11H-C30-37P(3m)	GT14 Handy	6m	1 GOT for 1 communication module
	LQE565 LQE165	RS-422	User preparing RS422 connection diagram 2)	GT11H-C30-37P(3m) GT11H-C60-37P(6m) GT11H-C100-37P(10m)	GT14 Handy	13m	

*1 Product manufactured by Hitachi, Ltd. For details of the product, contact Hitachi, Ltd.

(3) When using the external cable (GT11H-C□□□)

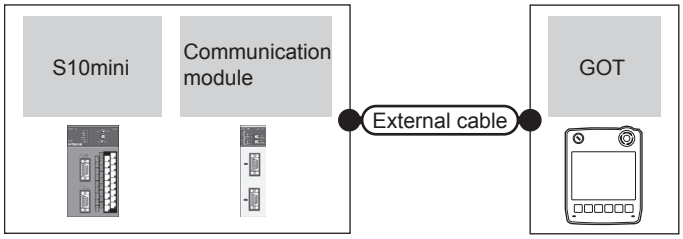

PLC			External cable	GOT model	Total distance	Number of connectable equipment
Series	Communication module*1	Communication type				
S10mini	LQE560 LQE060 LQE160	RS-232	GT11H-C30(3m) GT11H-C60(6m) User preparing RS232 connection diagram 3)	GT14 Handy	6m	1 GOT for 1 communication module
	LQE565 LQE165	RS-422	GT11H-C30(3m) GT11H-C60(6m) GT11H-C100(10m) User preparing RS422 connection diagram 3)	GT14 Handy	13m	

*1 Product manufactured by Hitachi, Ltd. For details of the product, contact Hitachi, Ltd.

46.3 Connection Diagram

The following diagram shows the connection between the GOT and the PLC.

46.3.1 RS-232 cable

■ Connection diagram

RS232 connection diagram 1)

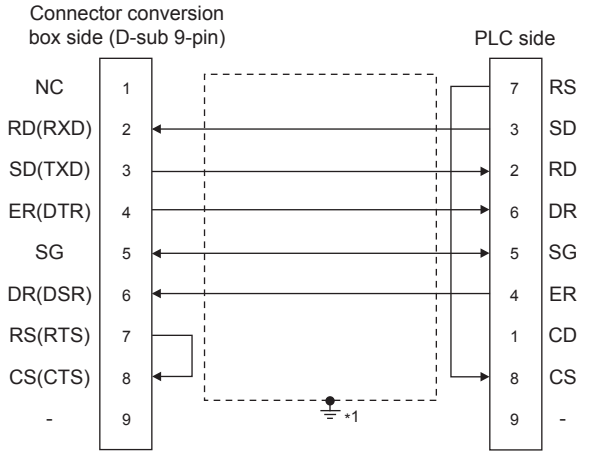

*1 Connect FG grounding to the appropriate part of a cable shield line.

RS232 connection diagram 2)

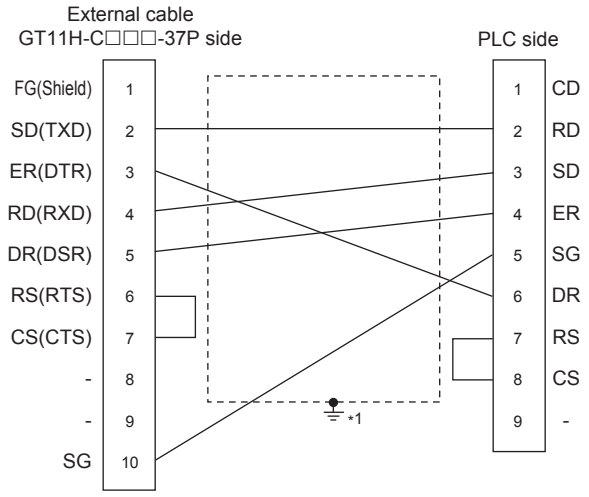

*1 Connect FG grounding to the appropriate part of a cable shield line.

RS232 connection diagram 3)

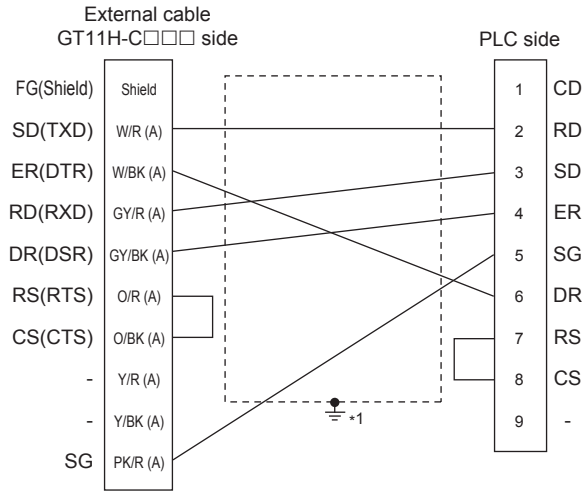

*1 Connect FG grounding to the appropriate part of a cable shield line.

■ Precautions when preparing a cable

(1) Cable length
The total distance (between the GOT and a controller) of RS-232 cable must be 6m or less.

(2) Connector conversion box side connector
For the connector conversion box side connector, refer to the following.
☞ 6.6 Connector Conversion Box

(3) External cable side connector
For the connector specifications of the external cable side, refer to the following.
☞ 8.2 External Cable, Relay Cable

(4) HITACHI PLC side connector
Use the connector supporting the HITACHI PLC side module.
For details, refer to the HITACHI PLC user's manual.

46.3.2 RS-422 cable

■ Connection diagram

RS422 connection diagram 1)

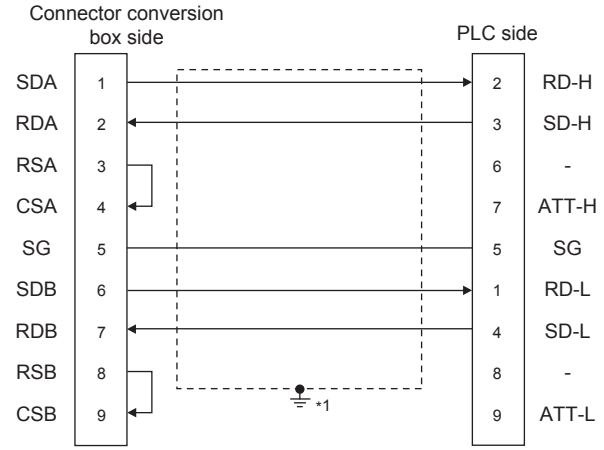

*1 Connect FG grounding to the appropriate part of a cable shield line.

RS422 connection diagram 2)

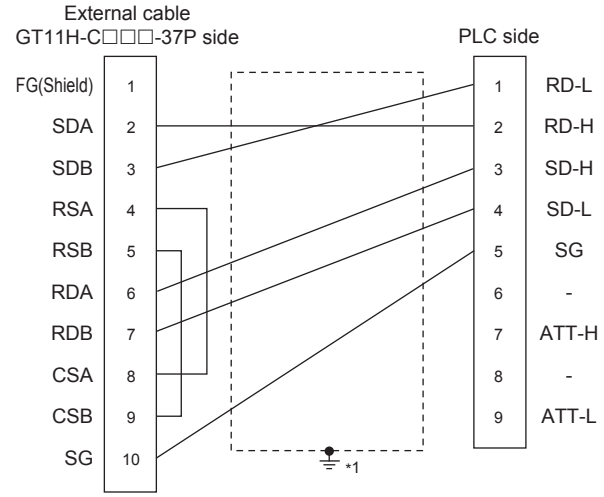

*1 Connect FG grounding to the appropriate part of a cable shield line.

RS422 connection diagram 3)

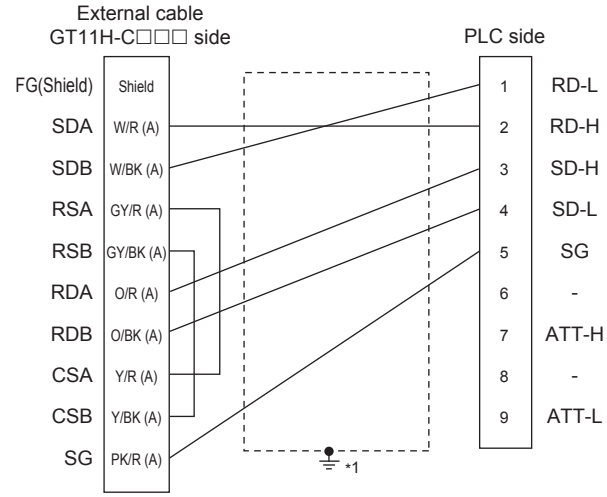

*1 Connect FG grounding to the appropriate part of a cable shield line.

■ Precautions when preparing a cable

(1) Cable length
The total distance (between GOT and controllers) of RS-422 cable must be 13m or less.

(2) Connector conversion box side connector
For the connector conversion box side connector, refer to the following.
☞ 6.6 Connector Conversion Box

(3) External cable side connector
For the connector specifications of the external cable side, refer to the following.
☞ 8.2 External Cable, Relay Cable

(4) HITACHI PLC side connector
Use the connector supporting the HITACHI PLC side module.
For details, refer to the HITACHI PLC user's manual.

46.4 GOT Side Settings

46.4.1 Setting communication interface (Communication settings)

Set the channel of the connected equipment.

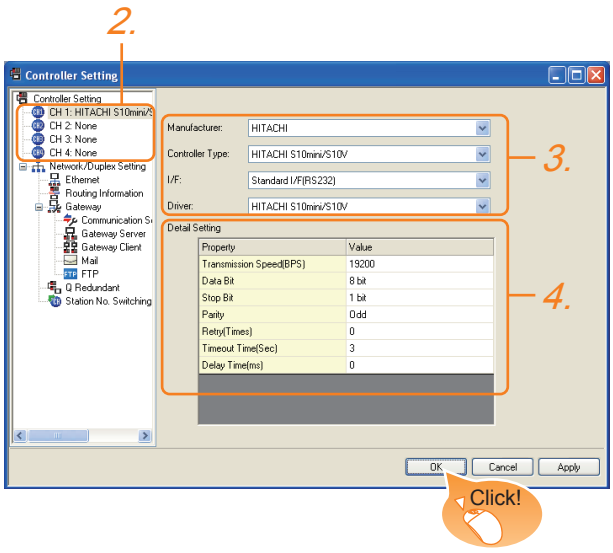

1. Select [Common] → [Controller Setting] from the menu.
2. The Controller Setting window is displayed. Select the channel to be used from the list menu.
3. Set the following items.
   - Manufacturer: HITACHI
   - Controller Type: HITACHI S10mini/S10V
   - I/F: Interface to be used
   - Driver: HITACHI S10mini/S10V
4. The detailed setting is displayed after Manufacturer, Controller Type, I/F, and Driver are set.
   Make the settings according to the usage environment.
   46.4.2 Communication detail settings

Click the OK button when settings are completed.

POINT

The settings of connecting equipment can be confirmed in [I/F Communication Setting].
For details, refer to the following.
18.1.2 I/F communication setting

46.4.2 Communication detail settings

Make the settings according to the usage environment.

Item	Description	Range
Transmission Speed	Set this item when change the transmission speed used for communication with the connected equipment. (Default: 19200bps)	9600bps, 19200bps, 38400bps, 57600bps, 115200bps
Data Bit	Set this item when change the data length used for communication with the connected equipment. (Default: 8bit)	7bit/8bit
Stop Bit	Specify the stop bit length for communications. (Default: 1bit)	1bit/2bit
Parity	Specify whether or not to perform a parity check, and how it is performed during communication. (Default: Odd)	None Even Odd
Retry	Set the number of retries to be performed when a communication error occurs. (Default: 0time)	0 to 5times
Timeout Time	Set the time period for a communication to time out. (Default: 3sec)	3 to 30sec
Delay Time	Set this item to adjust the transmission timing of the communication request from the GOT. (Default: 0)	0 to 300m

POINT

(1) Communication interface setting by Utility
The communication interface setting can be changed on the Utility's [Communication setting] after writing [Communication Settings] of project data.
For details on the Utility, refer to the following manual.
11. COMMUNICATION INTERFACE SETTING (COMMUNICATION SETTING)

(2) Precedence in communication settings
When settings are made by GT Designer3 or the Utility, the latest setting is effective.

46.5 PLC Side Setting

POINT

HITACHI PLC

For details of HITACHI PLCs, refer to the following manuals.

☞ HITACHI PLC user's Manual

Model		Refer to
Communication module	LQE560	46.5.1
	LQE060	
	LQE160	
	LQE565	
	LQE165	

46.5.1 Connecting to communication module

■ Communication settings

Make the communication settings of the Communication module.

Item	Set value
Channel No. setting*1*2	#0 to #3
Protocol setting	H-7338 protocol
Transmission speed	19200bps (fixed)
Data bit	8bit (Fixed)
Parity bit	Odd (fixed)
Start bit	1bit (Fixed)
Stop bit	1bit (Fixed)

*1 The ranges of available channel No. differ depending on the model of communication module.
*2 Avoid duplication of the channel No.

■ Settings by switch

Make the communication settings using each setting switch.

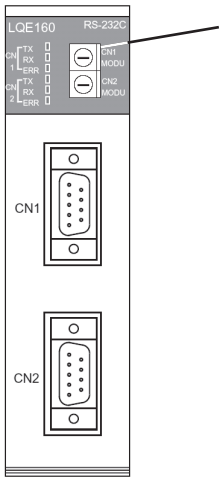

Setting switches for the channel No. and the protocol
CN1 MODU, CN2 MODU

(1) Settings of the channel No. and the protocol

Switch position	Protocol	Channel No.
8	H-7338	#0
9		#1
A		#2
B		#3

CN1 MODU

CN2 MODU

46.6 Device Range that Can Be Set

For details on the device range of controllers that can be used on GT14 Handy, refer to the following manuals.

☞ GT Designer3 Version1 Screen Design Manual (Fundamentals)

☞ GOT1000 Series Connection Manual (Non-Mitsubishi Products 2) for GT Works3

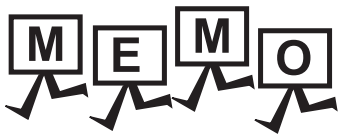
MEMO

47. CONNECTION TO FUJI PLC

47.1 Connectable Model List

The following table shows the connectable models.

Series	Model	Clock	Communication type	GT14 Handy	Refer to
MICREX-F	F55	×	RS-232 RS-485	○	47.2.1
	F70	×	RS-232 RS-485	○	47.2.2
	F120S	×	RS-232 RS-485	○	47.2.3
	F140S				
	F15□S				
MICREX-SX SPH	SPH200	×	RS-232 RS-485	○	47.2.4
	SPH300				
	SPH2000				
	SPH3000				
MICREX-SX SPH	SPH200	×	Ethernet	○	47.3.1
	SPH300				
	SPH2000				
	SPH3000				

47.2 Serial Connection

For details on the system configuration on the PLC side, refer to the following section.

47.5 Precautions

47.2.1 System Configuration for connecting to MICREX-F55

■ When using the RS-232 interface card

Communication driver

FUJI MICREX-F

(1) When using the connector conversion box

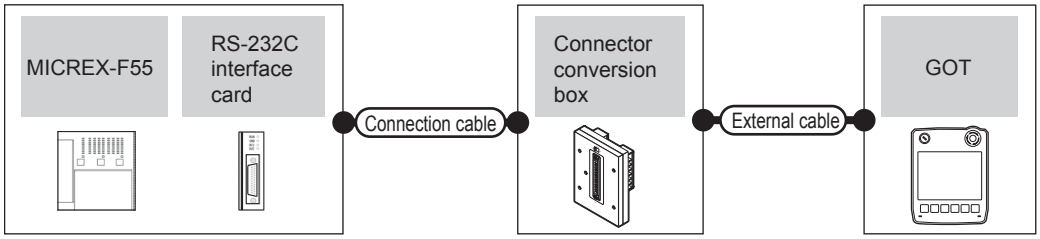

PLC			Connection cable	Connector conversion box	External cable	GOT model	Total distance	Number of connectable equipment
Model	RS-232C interface card*1	Communication type	Cable model Connection diagram number					
F55	NV1L-RS2	RS-232	GT09-C30R21003-25P(3m) or User preparing RS232 connection diagram 1)	GT11H-CNB-37S	GT11H-C30-37P(3m)	GT14 Handy	6m	1 GOT for 1 RS-232C interface card

*1 Product manufactured by Fuji Electric Co., Ltd. For details of the product, contact Fuji Electric Co., Ltd.

(2) When using the external cable (GT11H-C□□□-37P)

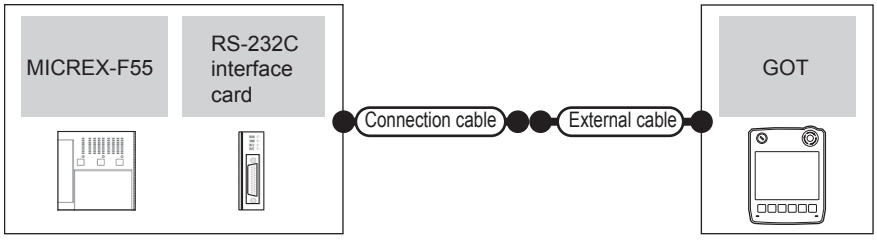

PLC			Connection cable	External cable	GOT model	Total distance	Number of connectable equipment
Model	RS-232C interface card*1	Communication type	Cable model Connection diagram number				
F55	NV1L-RS2	RS-232	User preparing RS232 connection diagram 2)	GT11H-C30-37P(3m)	GT14 Handy	6m	1 GOT for 1 RS-232C interface card

*1 Product manufactured by Fuji Electric Co., Ltd. For details of the product, contact Fuji Electric Co., Ltd.

(3) When using the external cable (GT11H-C□□□)

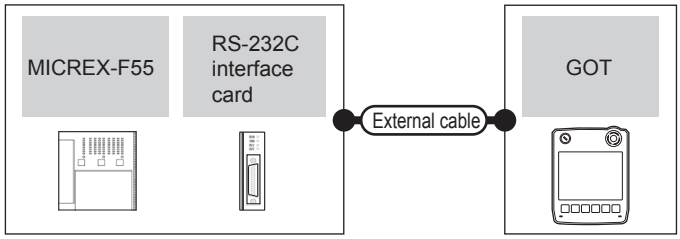

PLC			External cable	GOT model	Total distance	Number of connectable equipment
Model	RS-232C interface card*1	Communication type				
F55	NV1L-RS2	RS-232	GT11H-C30(3m) GT11H-C60(6m) (User preparing) RS232 connection diagram 3)	GT14 Handy	6m	1 GOT for 1 RS-232C interface card

*1 Product manufactured by Fuji Electric Co., Ltd. For details of the product, contact Fuji Electric Co., Ltd.

■ When using the RS-232C/485 interface capsule

(1) When using the connector conversion box

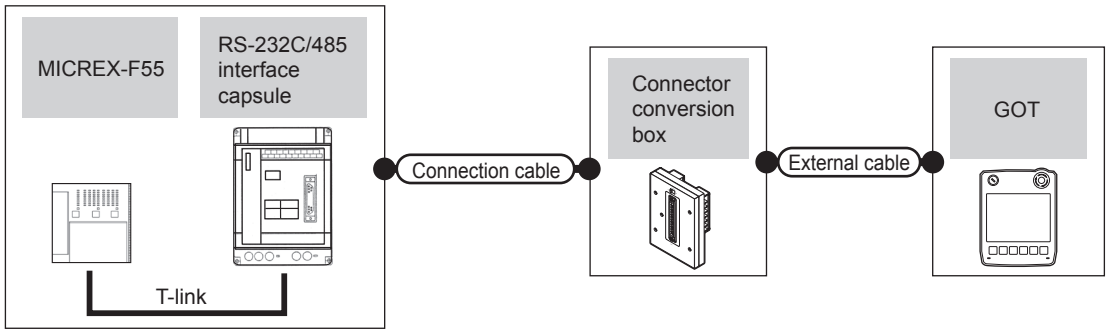

PLC			Connection cable	Connector conversion box	External cable	GOT model	Total distance *2	Number of connectable equipment
Model	RS-232C/485 interface capsule*1	Communication type	Cable model Connection diagram number					
F55	FFK120A-C10	RS-232	GT09-C30R21003-25P(3m) or (User preparing) RS232 connection diagram 1)	GT11H-CNB-37S	GT11H-C30-37P(3m)	GT14 Handy	6m	1 GOT for 1 RS-232C/485 interface capsule

*1 Product manufactured by Fuji Electric Co., Ltd. For details of the product, contact Fuji Electric Co., Ltd.

*2 The distance from GOT to RS-232C/485 interface capsule (Connection cable + External cable)

(2) When using the external cable (GT11H-C□□□-37P)

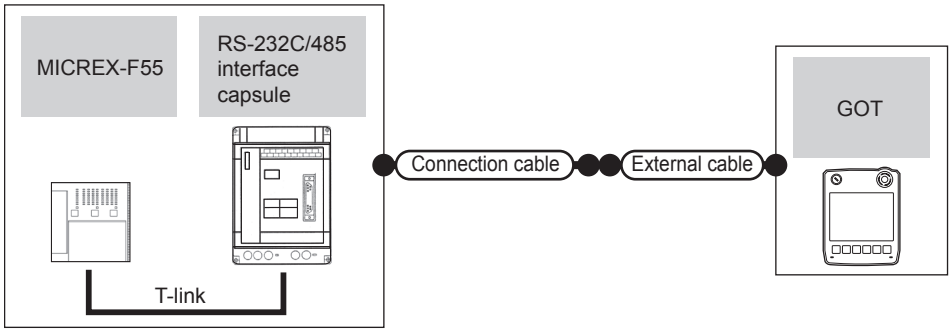

PLC			Connection cable	External cable	GOT model	Total distance *2	Number of connectable equipment
Model	RS-232C/485 interface capsule*1	Communication type	Cable model Connection diagram number				
F55	FFK120A-C10	RS-232	User preparing RS232 connection diagram 2)	GT11H-C30-37P(3m)	GT14 Handy	6m	1 GOT for 1 RS-232C/485 interface capsule

*1 Product manufactured by Fuji Electric Co., Ltd. For details of the product, contact Fuji Electric Co., Ltd.
*2 The distance from GOT to RS-232C/485 interface capsule (Connection cable + External cable)

(3) When using the external cable (GT11H-C□□□)

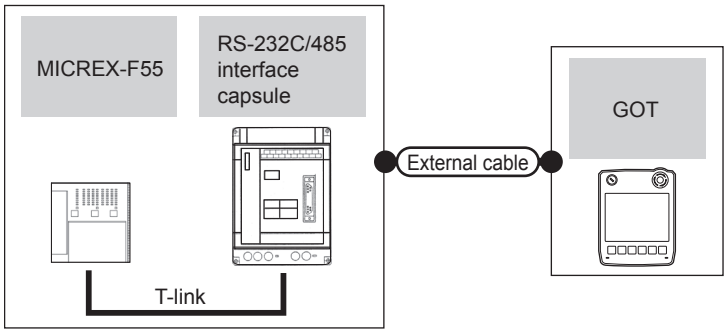

PLC			External cable	GOT model	Total distance *2	Number of connectable equipment
Model	RS-232C/485 interface capsule*1	Communication type				
F55	FFK120A-C10	RS-232	GT11H-C30(3m) GT11H-C60(6m) User preparing RS232 connection diagram 3)	GT14 Handy	6m	1 GOT for 1 RS-232C/485 interface capsule

*1 Product manufactured by Fuji Electric Co., Ltd. For details of the product, contact Fuji Electric Co., Ltd.
*2 The distance from GOT to RS-232C/485 interface capsule (Connection cable + External cable)

■ When connecting to multiple PLCs

(1) When using the connector conversion box

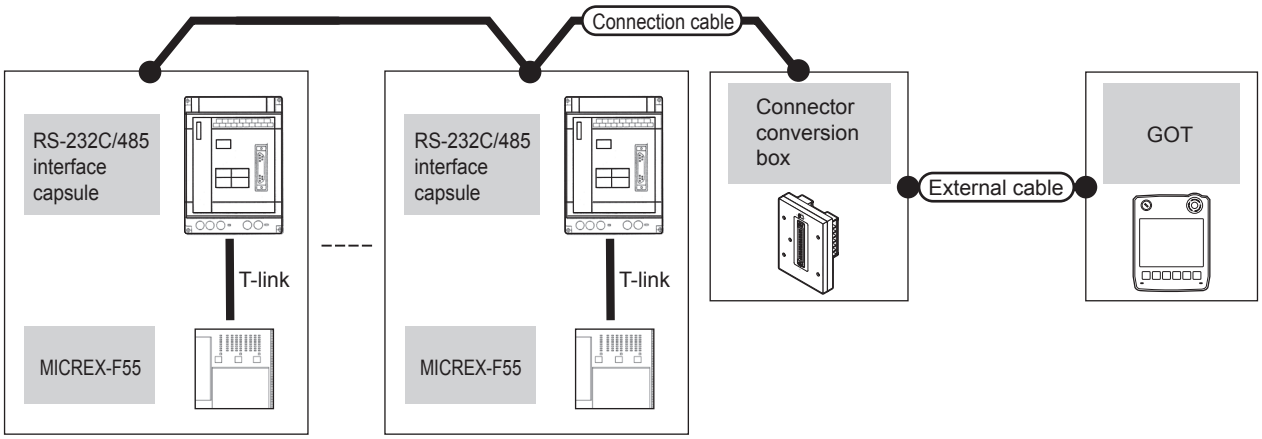

PLC			Connection cable	Connector conversion box	External cable	GOT model	Total distance *2	Number of connectable equipment
Model	RS-232C/485 interface capsule*1	Communication type	Cable model Connection diagram number					
F55	FFK120A-C10	RS-485	GT09-C30R41001-6T(3m) GT09-C100R41001-6T(10m) or User preparing RS485 connection diagram 1)	GT11H-CNB-37S	GT11H-C30-37P(3m) GT11H-C60-37P(6m) GT11H-C100-37P(10m)	GT14 Handy	13m	1 GOT for up to 6 PLCs (RS-232C/485 interface capsules)

*1 Product manufactured by Fuji Electric Co., Ltd. For details of the product, contact Fuji Electric Co., Ltd.
*2 The distance from GOT to RS-232C/485 interface capsule (Connection cable + External cable)

(2) When using the external cable (GT11H-C□□□-37P)

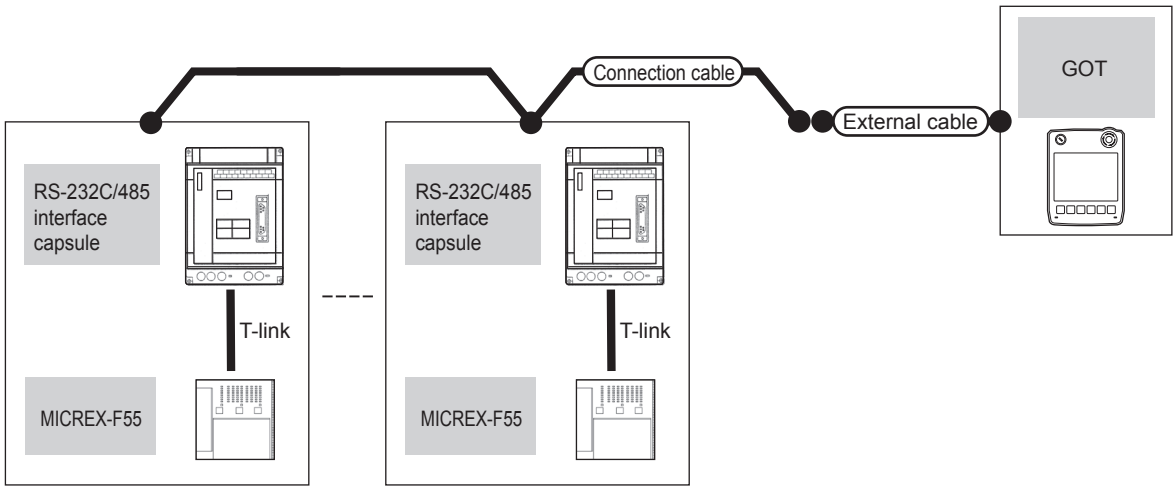

PLC			Connection cable	External cable	GOT model	Total distance *2	Number of connectable equipment
Model	RS-232C/485 interface capsule*1	Communication type	Cable model Connection diagram number				
F55	FFK120A-C10	RS-485	User preparing RS485 connection diagram 2)	GT11H-C30-37P(3m) GT11H-C60-37P(6m) GT11H-C100-37P(10m)	GT14 Handy	13m	1 GOT for up to 6 PLCs (RS-232C/485 interface capsules)

*1 Product manufactured by Fuji Electric Co., Ltd. For details of the product, contact Fuji Electric Co., Ltd.
*2 The distance from GOT to RS-232C/485 interface capsule (Connection cable + External cable)

(3) When using the external cable (GT11H-C□□□)

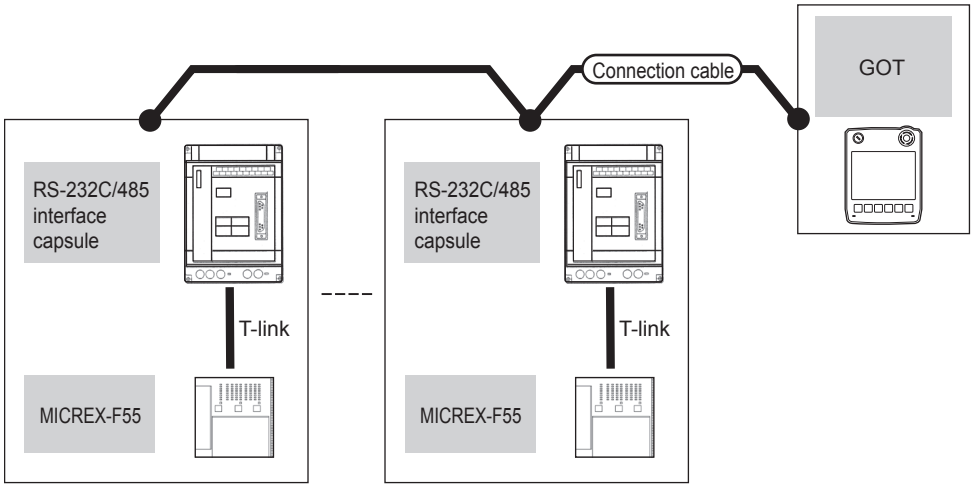

PLC			External cable	GOT model	Total distance *2	Number of connectable equipment
Model	RS-232C/485 interface capsule*1	Communication type				
F55	FFK120A-C10	RS-485	GT11H-C30(3m) GT11H-C60(6m) GT11H-C100(10m) User preparing RS485 connection diagram 3)	GT14 Handy	13m	1 GOT for up to 6 PLCs (RS-232C/485 interface capsules)

*1 Product manufactured by Fuji Electric Co., Ltd. For details of the product, contact Fuji Electric Co., Ltd.

*2 The distance from GOT to RS-232C/485 interface capsule (Connection cable + External cable)

47.2.2 System Configuration for connecting to MICREX-F70

■ When using general-purpose interface modules

Communication driver
FUJI MICREX-F

(1) When using the connector conversion box

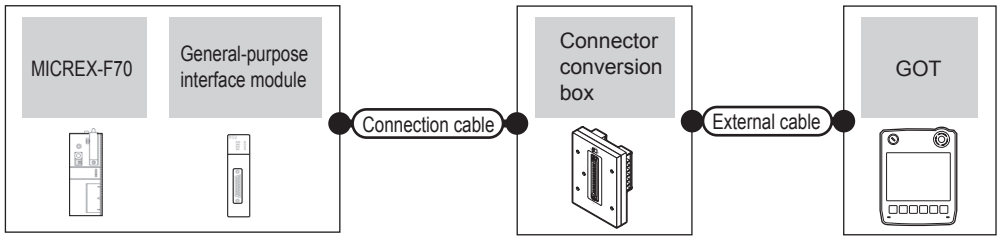

PLC			Connection cable	Connector conversion box	External cable	GOT model	Total distance	Number of connectable equipment
Model	General-purpose interface module*1	Communication type	Cable model Connection diagram number					
F70	NC1L-RS2	RS-232	GT09-C30R21003-25P(3m) or User preparing RS232 connection diagram 1)	GT11H-CNB-37S	GT11H-C30-37P(3m)	GT14 Handy	6m	1 GOT for 1 general-purpose interface module

*1 Product manufactured by Fuji Electric Co., Ltd. For details of the product, contact Fuji Electric Co., Ltd.

(2) When using the external cable (GT11H-C□□□-37P)

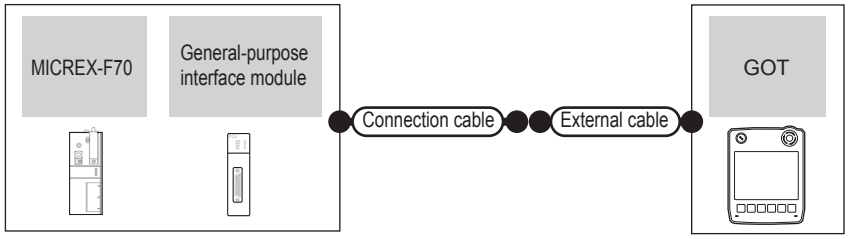

PLC			Connection cable	External cable	GOT model	Total distance	Number of connectable equipment
Model	General-purpose interface module*1	Communication type	Cable model Connection diagram number				
F70	NC1L-RS2	RS-232	User preparing RS232 connection diagram 2)	GT11H-C30-37P(3m)	GT14 Handy	6m	1 GOT for 1 general-purpose interface module

*1 Product manufactured by Fuji Electric Co., Ltd. For details of the product, contact Fuji Electric Co., Ltd.

(3) When using the external cable (GT11H-C□□□)

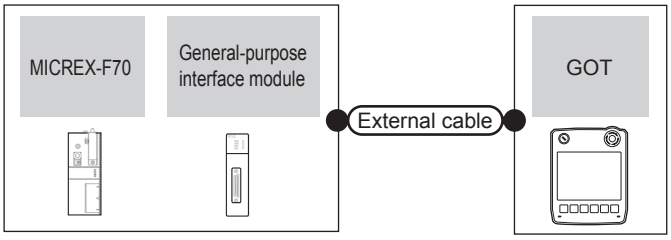

PLC			External cable	GOT model	Total distance	Number of connectable equipment
Model	General-purpose interface module*1	Communication type				
F70	NC1L-RS2	RS-232	GT11H-C30(3m) GT11H-C60(6m) User preparing RS232 connection diagram 3)	GT14 Handy	6m	1 GOT for 1 general-purpose interface module

*1 Product manufactured by Fuji Electric Co., Ltd. For details of the product, contact Fuji Electric Co., Ltd.

■ When using the RS-232C/485 interface capsule

(1) When using the connector conversion box

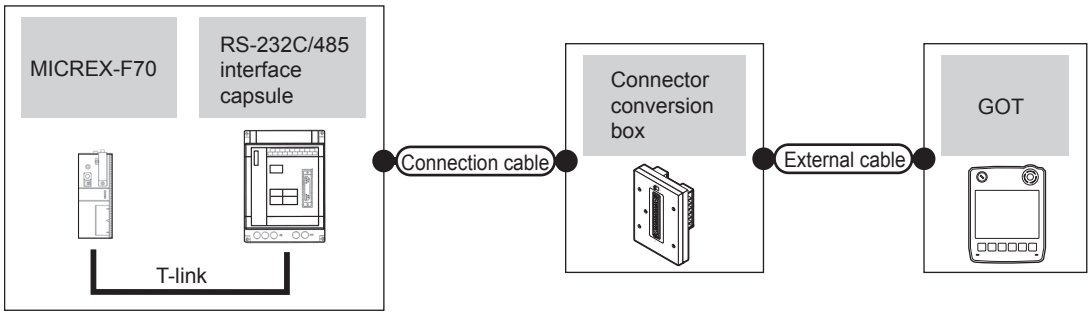

PLC			Connection cable	Connector conversion box	External cable	GOT model	Total distance *2	Number of connectable equipment
Model	RS-232C/485 interface capsule*1	Communication type	Cable model Connection diagram number					
F70	FFK120A-C10	RS-232	GT09-C30R21003-25P(3m) or User preparing RS232 connection diagram 1)	GT11H-CNB-37S	GT11H-C30-37P(3m)	GT14 Handy	6m	1 GOT for 1 RS-232C/485 interface capsule

*1 Product manufactured by Fuji Electric Co., Ltd. For details of the product, contact Fuji Electric Co., Ltd.

*2 The distance from GOT to RS-232C/485 interface capsule (Connection cable + External cable)

(2) When using the external cable (GT11H-C□□□-37P)

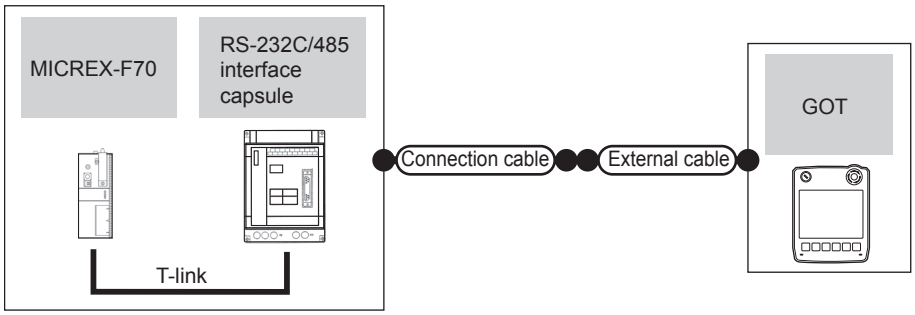

PLC			Connection cable	External cable	GOT model	Total distance *2	Number of connectable equipment
Model	RS-232C/485 interface capsule*1	Communication type	Cable model Connection diagram number				
F70	FFK120A-C10	RS-232	User preparing RS232 connection diagram 2)	GT11H-C30-37P(3m)	GT14 Handy	6m	1 GOT for 1 RS-232C/485 interface capsule

*1 Product manufactured by Fuji Electric Co., Ltd. For details of the product, contact Fuji Electric Co., Ltd.

*2 The distance from GOT to RS-232C/485 interface capsule (Connection cable + External cable)

(3) When using the external cable (GT11H-C□□□)

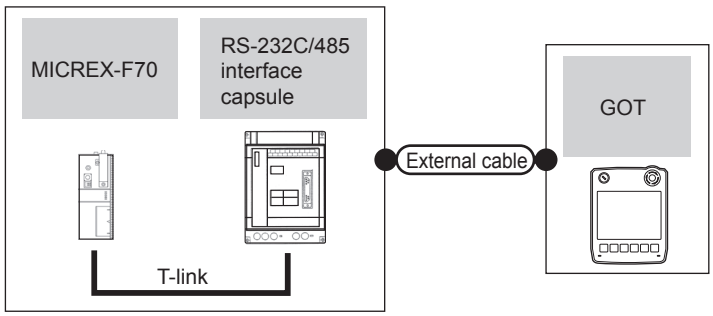

PLC			External cable	GOT model	Total distance *2	Number of connectable equipment
Model	RS-232C/485 interface capsule*1	Communication type				
F70	FFK120A-C10	RS-232	GT11H-C30(3m) GT11H-C60(6m) (User preparing) RS232 connection diagram 3)	GT14 Handy	6m	1 GOT for 1 RS-232C/485 interface capsule

*1 Product manufactured by Fuji Electric Co., Ltd. For details of the product, contact Fuji Electric Co., Ltd.

*2 The distance from GOT to RS-232C/485 interface capsule (Connection cable + External cable)

■ When connecting to multiple PLCs (using RS-232C/485 interface capsules)

(1) When using the connector conversion box

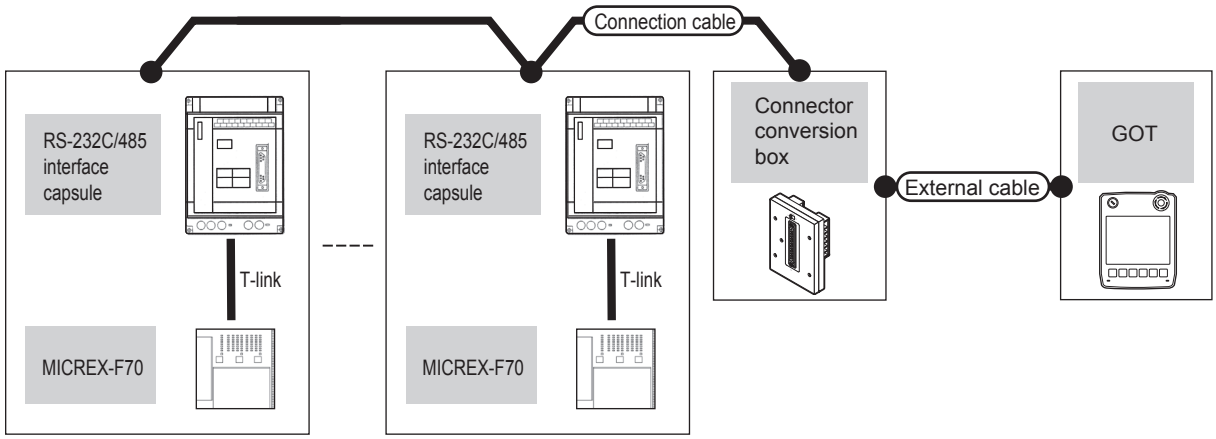

PLC			Connection cable	Connector conversion box	External cable	GOT model	Total distance *2	Number of connectable equipment
Model	RS-232C/485 interface capsule*1	Communication type	Cable model Connection diagram number					
F70	FFK120A-C10	RS-485	GT09-C30R41001-6T(3m) GT09-C100R41001-6T(10m) or User preparing RS485 connection diagram 1)	GT11H-CNB-37S	GT11H-C30-37P(3m) GT11H-C60-37P(6m) GT11H-C100-37P(10m)	GT14 Handy	13m	1 GOT for up to 6 PLCs (RS-232C/485 interface capsules)

*1 Product manufactured by Fuji Electric Co., Ltd. For details of the product, contact Fuji Electric Co., Ltd.
*2 The distance from GOT to RS-232C/485 interface capsule (Connection cable + External cable)

(2) When using the external cable (GT11H-C□□□-37P)

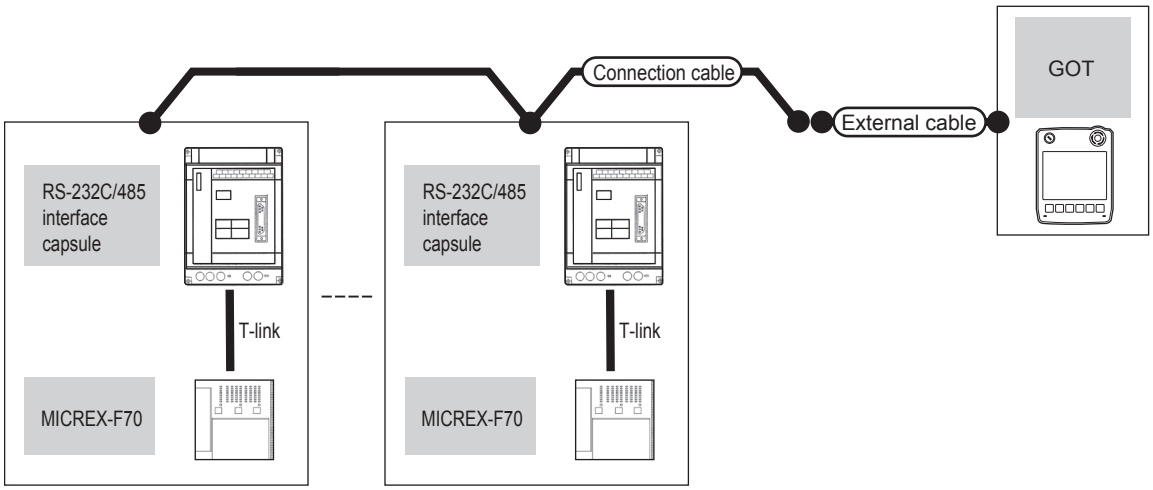

PLC			Connection cable	External cable	GOT model	Total distance *2	Number of connectable equipment
Model	RS-232C/485 interface capsule*1	Communication type	Cable model Connection diagram number				
F70	FFK120A-C10	RS-485	User preparing RS485 connection diagram 2)	GT11H-C30-37P(3m) GT11H-C60-37P(6m) GT11H-C100-37P(10m)	GT14 Handy	13m	1 GOT for up to 6 PLCs (RS-232C/485 interface capsules)

*1 Product manufactured by Fuji Electric Co., Ltd. For details of the product, contact Fuji Electric Co., Ltd.
*2 The distance from GOT to RS-232C/485 interface capsule (Connection cable + External cable)

(3) When using the external cable (GT11H-C□□□)

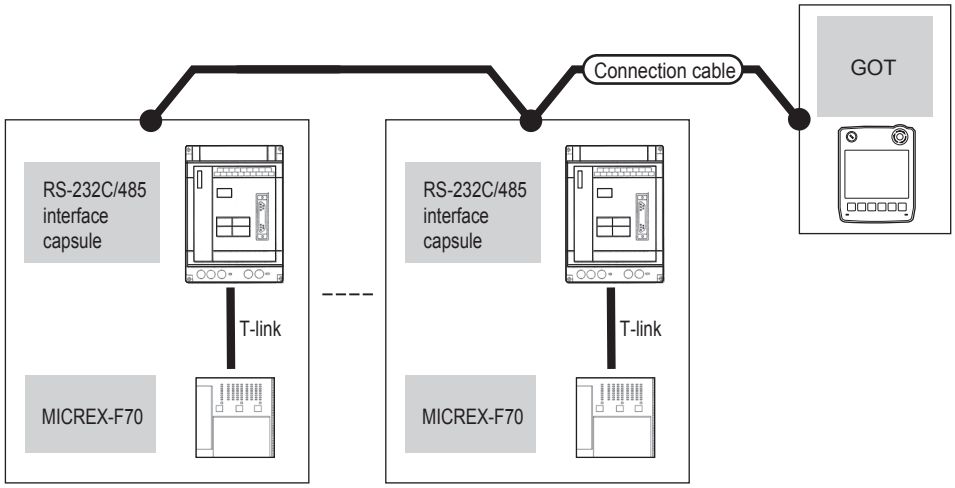

PLC			External cable	GOT model	Total distance *2	Number of connectable equipment
Model	RS-232C/485 interface capsule*1	Communication type				
F70	FFK120A-C10	RS-485	GT11H-C30(3m) GT11H-C60(6m) GT11H-C100(10m) (User preparing) RS485 connection diagram 3)	GT14 Handy	13m	1 GOT for up to 6 PLCs (RS-232C/485 interface capsules)

*1 Product manufactured by Fuji Electric Co., Ltd. For details of the product, contact Fuji Electric Co., Ltd.

*2 The distance from GOT to RS-232C/485 interface capsule (Connection cable + External cable)

■ When connecting to multiple PLCs (using general-purpose interface modules)

(1) When using the connector conversion box

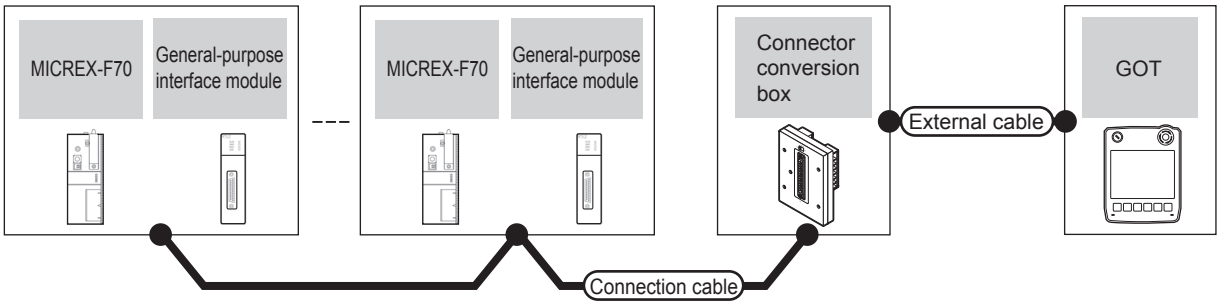

PLC			Connection cable	Connector conversion box	External cable	GOT model	Total distance	Number of connectable equipment
Model	General-purpose interface module*1	Communication type	Cable model Connection diagram number					
F70	NC1L-RS4	RS-485	GT09-C30R41001-6T(3m) GT09-C100R41001-6T(10m) or (User preparing) RS485 connection diagram 1)	GT11H-CNB-37S	GT11H-C30-37P(3m) GT11H-C60-37P(6m) GT11H-C100-37P(10m)	GT14 Handy	13m	1 GOT for up to 31 PLCs (general-purpose interface modules)

*1 Product manufactured by Fuji Electric Co., Ltd. For details of the product, contact Fuji Electric Co., Ltd.

(2) When using the external cable (GT11H-C□□□-37P)

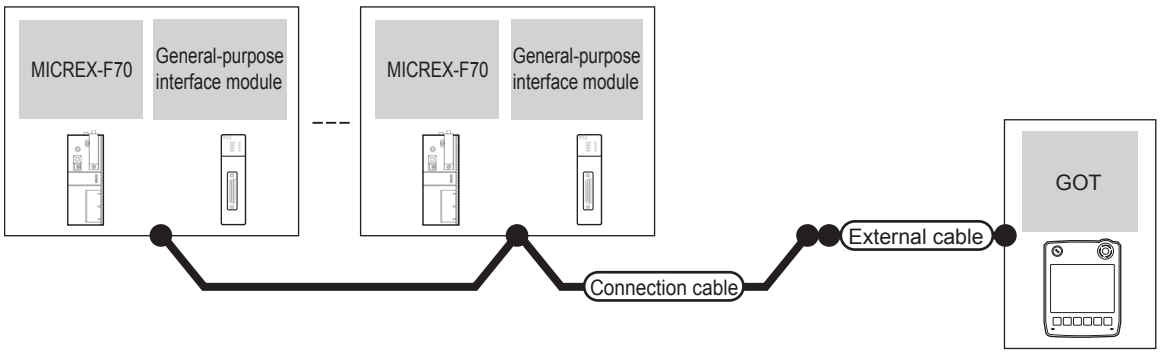

PLC			Connection cable	External cable	GOT model	Total distance	Number of connectable equipment
Model	General-purpose interface module*1	Communication type	Cable model Connection diagram number				
F70	NC1L-RS4	RS-485	User preparing RS485 connection diagram 2)	GT11H-C30-37P(3m) GT11H-C60-37P(6m) GT11H-C100-37P(10m)	GT14 Handy	13m	1 GOT for up to 31 PLCs (general-purpose interface modules)

*1 Product manufactured by Fuji Electric Co., Ltd. For details of the product, contact Fuji Electric Co., Ltd.

(3) When using the external cable (GT11H-C□□□)

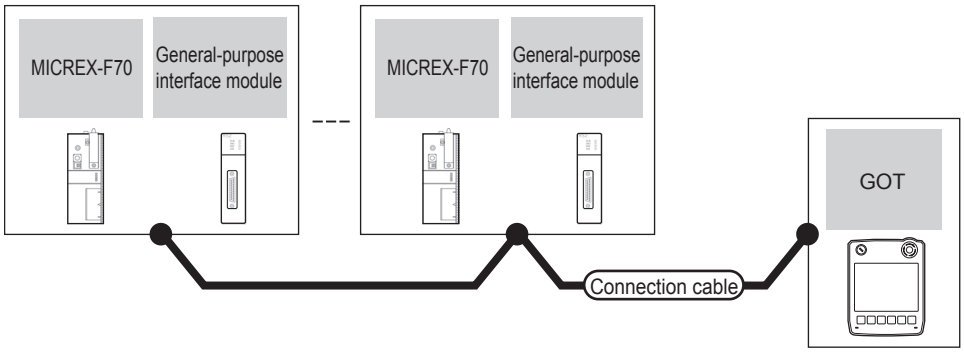

PLC			External cable	GOT model	Total distance	Number of connectable equipment
Model	General-purpose interface module*1	Communication type				
F70	NC1L-RS4	RS-485	GT11H-C30(3m) GT11H-C60(6m) GT11H-C100(10m) User preparing RS485 connection diagram 3)	GT14 Handy	13m	1 GOT for up to 31 PLCs (general-purpose interface modules)

*1 Product manufactured by Fuji Electric Co., Ltd. For details of the product, contact Fuji Electric Co., Ltd.

47.2.3 System Configuration for connecting to MICREX-F120S/140S/15[]S

■ When using general-purpose interface modules

Communication driver

FUJI MICREX-F

(1) When using the connector conversion box

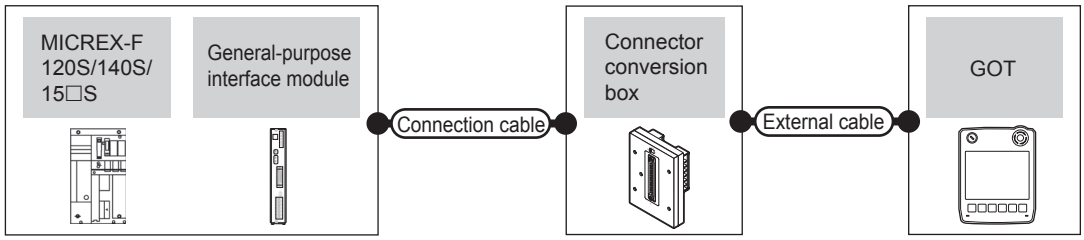

PLC			Connection cable	Connector conversion box	External cable	GOT model	Total distance	Number of connectable equipment
Model	General-purpose interface module*1	Communication type	Cable model Connection diagram number					
F120S F140S F15□S	FFU120B	RS-232	GT09-C30R21003-25P(3m) or User preparing RS232 connection diagram 1)	GT11H-CNB-37S	GT11H-C30-37P(3m)	GT14 Handy	6m	1 GOT for 1 general-purpose interface module

*1 Product manufactured by Fuji Electric Co., Ltd. For details of the product, contact Fuji Electric Co., Ltd.

(2) When using the external cable (GT11H-C□□□-37P)

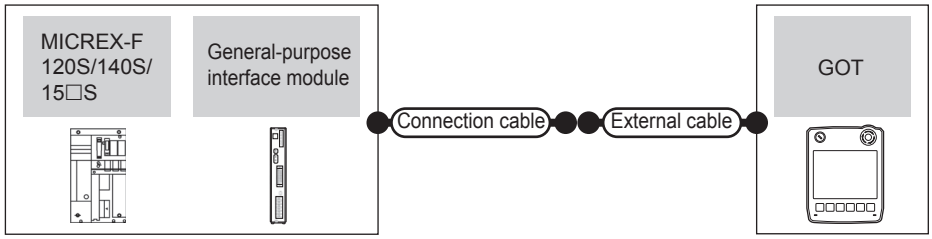

PLC			Connection cable	External cable	GOT model	Total distance	Number of connectable equipment
Model	General-purpose interface module*1	Communication type	Cable model Connection diagram number				
F120S F140S F15□S	FFU120B	RS-232	User preparing RS232 connection diagram 2)	GT11H-C30-37P(3m)	GT14 Handy	6m	1 GOT for 1 general-purpose interface module

*1 Product manufactured by Fuji Electric Co., Ltd. For details of the product, contact Fuji Electric Co., Ltd.

(3) When using the external cable (GT11H-C□□□)

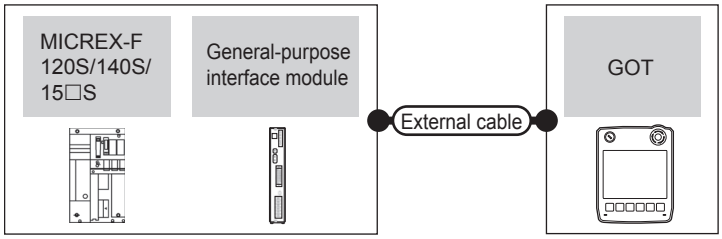

PLC			External cable	GOT model	Total distance	Number of connectable equipment
Model	General-purpose interface module*1	Communication type				
F120S F140S F15□S	FFU120B	RS-232	GT11H-C30(3m) GT11H-C60(6m) (User preparing)RS232 connection diagram 3)	GT14 Handy	6m	1 GOT for 1 general-purpose interface module

*1 Product manufactured by Fuji Electric Co., Ltd. For details of the product, contact Fuji Electric Co., Ltd.

■ When using the RS-232C/485 interface capsule

(1) When using the connector conversion box

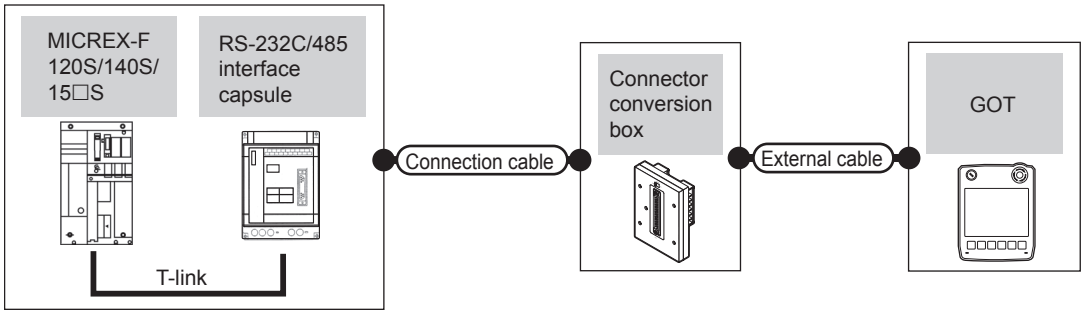

PLC			Connection cable	Connector conversion box	External cable	GOT model	Total distance *2	Number of connectable equipment
Model	RS-232C/485 interface capsule*1	Communication type	Cable model Connection diagram number					
F120S F140S F15□S	FFK120A-C10	RS-232	GT09-C30R21003-25P(3m) or (User preparing)RS232 connection diagram 1)	GT11H-CNB-37S	GT11H-C30-37P(3m)	GT14 Handy	6m	1 GOT for 1 RS-232C/485 interface capsule

*1 Product manufactured by Fuji Electric Co., Ltd. For details of the product, contact Fuji Electric Co., Ltd.

*2 The distance from GOT to RS-232C/485 interface capsule (Connection cable + External cable)

(2) When using the external cable (GT11H-C□□□-37P)

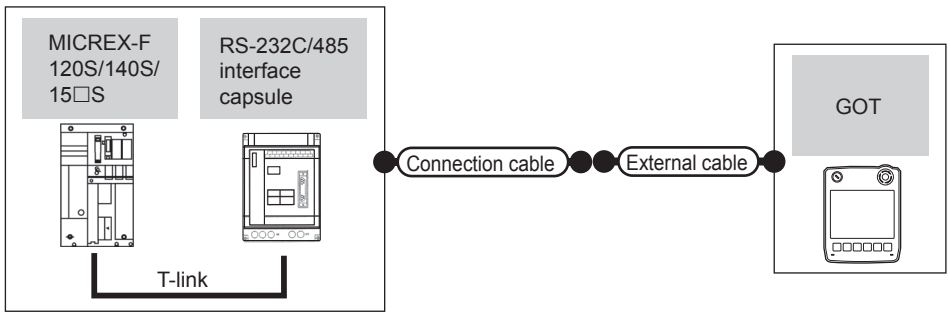

PLC			Connection cable	External cable	GOT model	Total distance *2	Number of connectable equipment
Model	RS-232C/485 interface capsule*1	Communication type	Cable model Connection diagram number				
F120S F140S F15□S	FFK120A-C10	RS-232	User preparing RS232 connection diagram 2)	GT11H-C30-37P(3m)	GT14 Handy	6m	1 GOT for 1 RS-232C/485 interface capsule

*1 Product manufactured by Fuji Electric Co., Ltd. For details of the product, contact Fuji Electric Co., Ltd.
*2 The distance from GOT to RS-232C/485 interface capsule (Connection cable + External cable)

(3) When using the external cable (GT11H-C□□□)

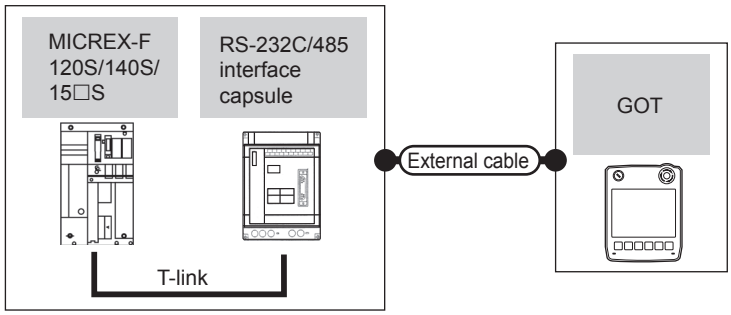

PLC			External cable	GOT model	Total distance *2	Number of connectable equipment
Model	RS-232C/485 interface capsule*1	Communication type				
F120S F140S F15□S	FFK120A-C10	RS-232	GT11H-C30(3m) GT11H-C60(6m) User preparing RS232 connection diagram 3)	GT14 Handy	6m	1 GOT for 1 RS-232C/485 interface capsule

*1 Product manufactured by Fuji Electric Co., Ltd. For details of the product, contact Fuji Electric Co., Ltd.
*2 The distance from GOT to RS-232C/485 interface capsule (Connection cable + External cable)

■ When connecting to multiple PLCs (using RS-232C/485 interface capsules)

(1) When using the connector conversion box

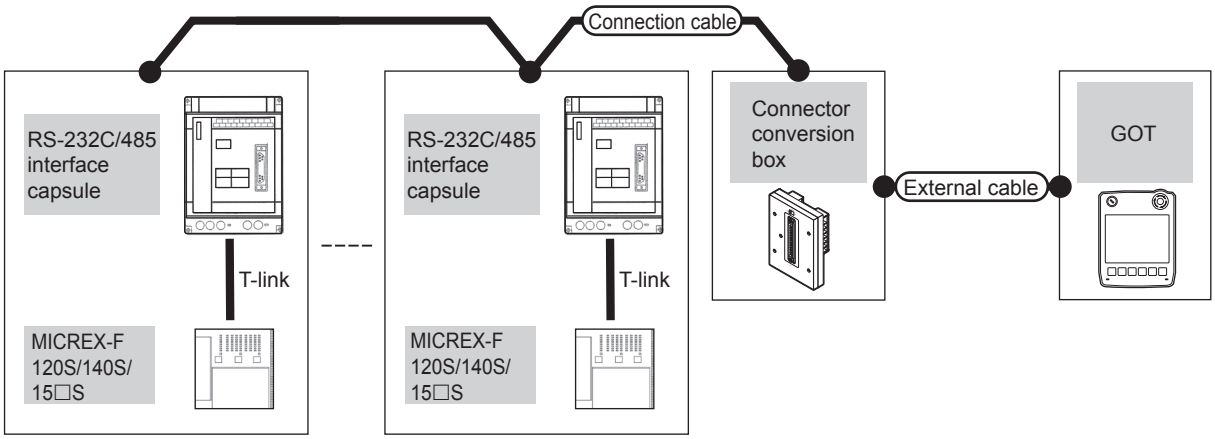

PLC			Connection cable	Connector conversion box	External cable	GOT model	Total distance *2	Number of connectable equipment
Model	RS-232C/485 interface capsule*1	Communication type	Cable model Connection diagram number					
F120S F140S F15□S	FFK120A-C10	RS-485	GT09-C30R41001-6T(3m) GT09-C100R41001-6T(10m) or User preparing RS485 connection diagram 1)	GT11H-CNB-37S	GT11H-C30-37P(3m) GT11H-C60-37P(6m) GT11H-C100-37P(10m)	GT14 Handy	13m	1 GOT for up to 6 PLCs (RS-232C/485 interface capsules)

*1 Product manufactured by Fuji Electric Co., Ltd. For details of the product, contact Fuji Electric Co., Ltd.
*2 The distance from GOT to RS-232C/485 interface capsule (Connection cable + External cable)

(2) When using the external cable (GT11H-C□□□-37P)

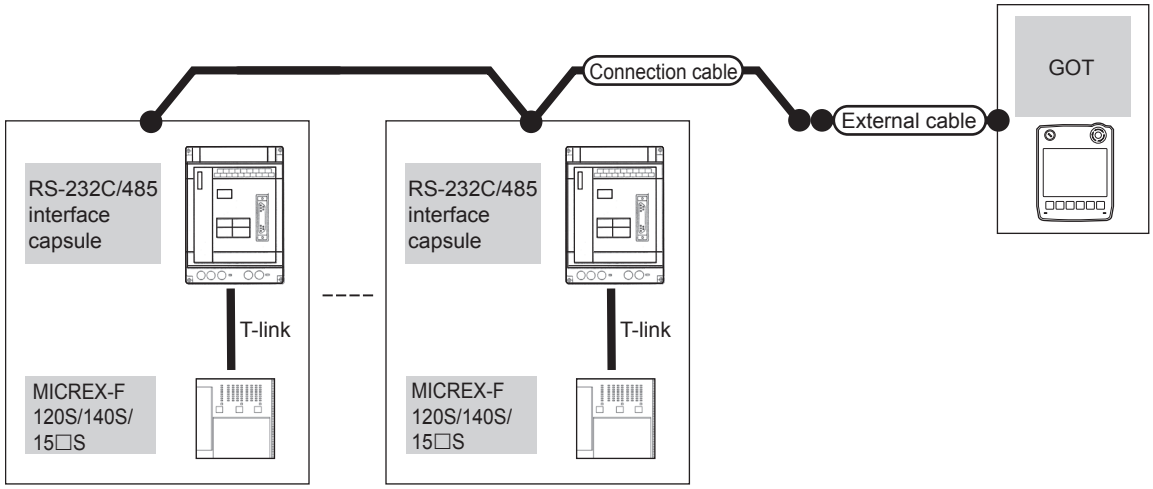

PLC			Connection cable	External cable	GOT model	Total distance *2	Number of connectable equipment
Model	RS-232C/485 interface capsule*1	Communication type	Cable model Connection diagram number				
F120S F140S F15□S	FFK120A-C10	RS-485	User preparing RS485 connection diagram 2)	GT11H-C30-37P(3m) GT11H-C60-37P(6m) GT11H-C100-37P(10m)	GT14 Handy	13m	1 GOT for up to 6 PLCs (RS-232C/485 interface capsules)

*1 Product manufactured by Fuji Electric Co., Ltd. For details of the product, contact Fuji Electric Co., Ltd.
*2 The distance from GOT to RS-232C/485 interface capsule (Connection cable + External cable)

(3) When using the external cable (GT11H-C□□□)

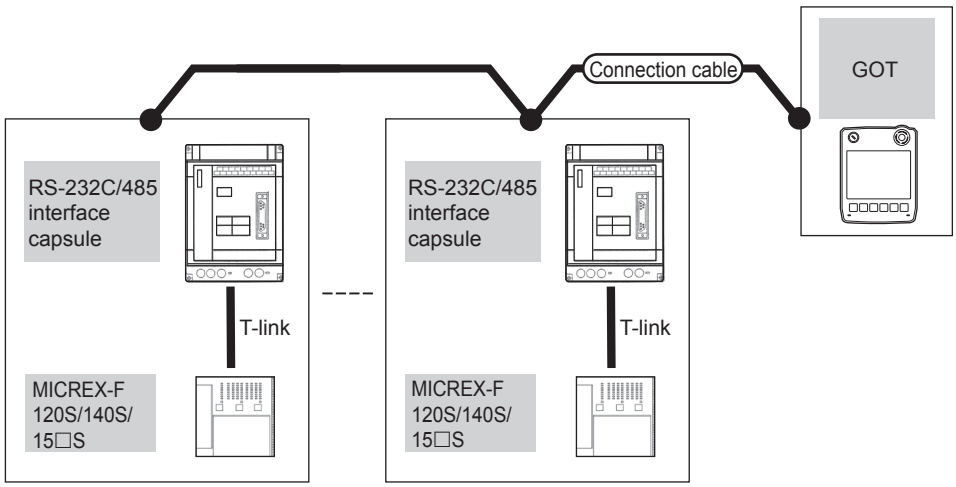

PLC			External cable	GOT model	Total distance *2	Number of connectable equipment
Model	RS-232C/485 interface capsule*1	Communication type				
F120S F140S F15□S	FFK120A-C10	RS-485	GT11H-C30(3m) GT11H-C60(6m) GT11H-C100(10m) User programming RS485 connection diagram 3)	GT14 Handy	13m	1 GOT for up to 6 PLCs (RS-232C/485 interface capsules)

*1 Product manufactured by Fuji Electric Co., Ltd. For details of the product, contact Fuji Electric Co., Ltd.

*2 The distance from GOT to RS-232C/485 interface capsule (Connection cable + External cable)

■ When connecting to multiple PLCs (using general-purpose interface modules)

(1) When using the connector conversion box

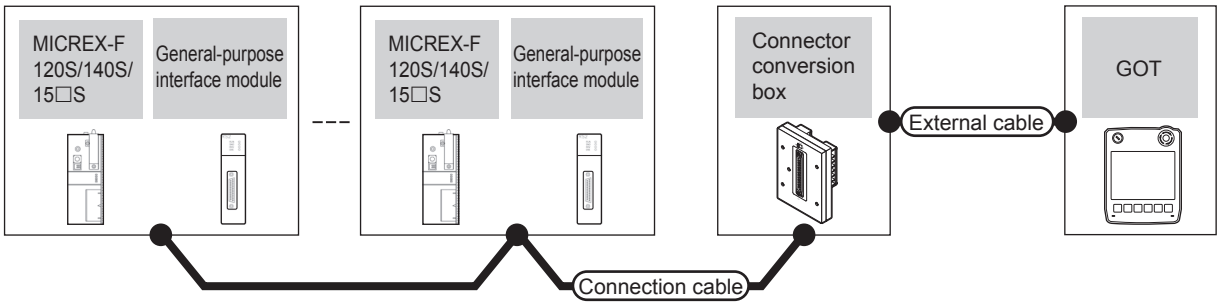

PLC			Connection cable	Connector conversion box	External cable	GOT model	Total distance	Number of connectable equipment
Model	General-purpose interface module*1	Communication type	Cable model Connection diagram number					
F120S F140S F15□S	FFU120B	RS-485	GT09-C30R41001-6T(3m) GT09-C100R41001-6T(10m) or User preparing RS485 connection diagram 1)	GT11H-CNB-37S	GT11H-C30-37P(3m) GT11H-C60-37P(6m) GT11H-C100-37P(10m)	GT14 Handy	13m	1 GOT for up to 31 PLCs (general-purpose interface modules)

*1 Product manufactured by Fuji Electric Co., Ltd. For details of the product, contact Fuji Electric Co., Ltd.

(2) When using the external cable (GT11H-C□□□-37P)

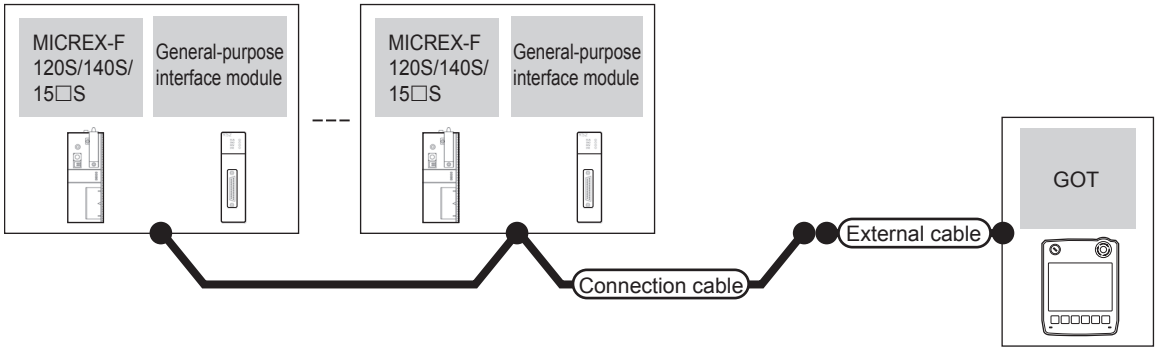

PLC			Connection cable	External cable	GOT model	Total distance	Number of connectable equipment
Model	General-purpose interface module*1	Communication type	Cable model Connection diagram number				
F120S F140S F15□S	FFU120B	RS-485	User preparing RS485 connection diagram 2)	GT11H-C30-37P(3m) GT11H-C60-37P(6m) GT11H-C100-37P(10m)	GT14 Handy	13m	1 GOT for up to 10 PLCs (general-purpose interface modules)

*1 Product manufactured by Fuji Electric Co., Ltd. For details of the product, contact Fuji Electric Co., Ltd.

(3) When using the external cable (GT11H-C□□□)

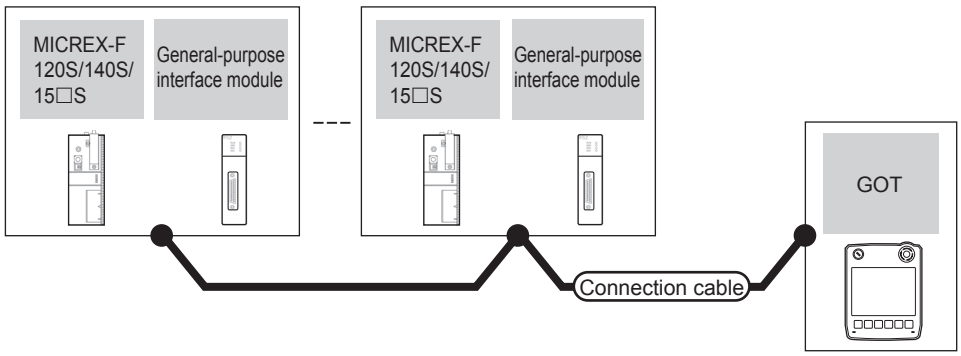

PLC			External cable	GOT model	Total distance	Number of connectable equipment
Model	General-purpose interface module*1	Communication type				
F120S F140S F15□S	FFU120B	RS-485	GT11H-C30(3m) GT11H-C60(6m) GT11H-C100(10m) (User preparing) RS485 connection diagram 3)	GT14 Handy	13m	1 GOT for up to 10 PLCs (general-purpose interface modules)

*1 Product manufactured by Fuji Electric Co., Ltd. For details of the product, contact Fuji Electric Co., Ltd.

47.2.4 System Configuration for connecting to MICREX-SX SPH

Communication driver

FUJI MICREX-SX SPH

(1) When using the connector conversion box

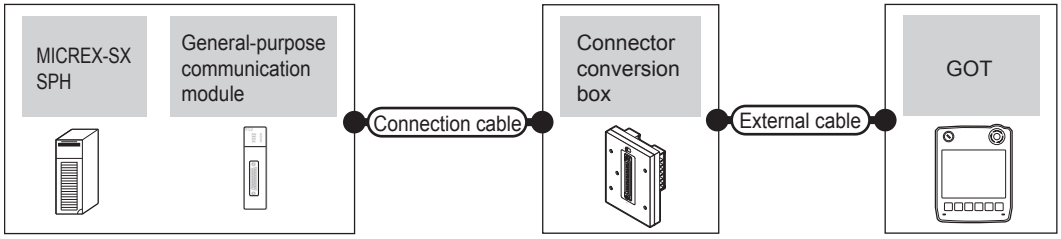

PLC			Connection cable	Connector conversion box	External cable	GOT model	Total distance	Number of connectable equipment
Model	General-purpose interface module*1	Communication type	Cable model Connection diagram number					
MICREX-SX SPH	-	RS-232	NP4H-CB2 (2m)*1 + NW0H-CNV*1	GT11H-CNB-37S	GT11H-C30-37P(3m)	GT14 Handy	5m	1 GOT for 1 General-purpose communication module
	NP1L-RS1 NP1L-RS2 NP1L-RS3	RS-232	User preparing RS232 connection diagram 4)	GT11H-CNB-37S	GT11H-C30-37P(3m)	GT14 Handy	6m	1 GOT for Communication port of general-purpose communication module
	NP1L-RS1 NP1L-RS4	RS-485	User preparing RS485 connection diagram 4)	GT11H-CNB-37S	GT11H-C30-37P(3m) GT11H-C60-37P(6m) GT11H-C100-37P(10m)	GT14 Handy	13m	
	NP1L-RS5	RS-485	User preparing RS485 connection diagram 5)	GT11H-CNB-37S	GT11H-C30-37P(3m) GT11H-C60-37P(6m) GT11H-C100-37P(10m)	GT14 Handy	13m	

*1 Product manufactured by Fuji Electric Co., Ltd. For details of the product, contact Fuji Electric Co., Ltd.

(2) When using the external cable (GT11H-C□□□-37P)

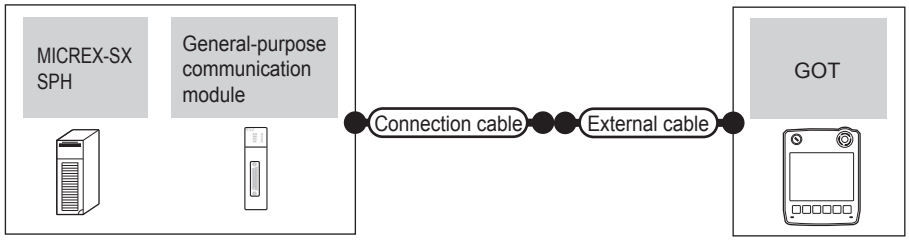

PLC			Connection cable	External cable	GOT model	Total distance	Number of connectable equipment
Model	General-purpose interface module*1	Communication type	Cable model Connection diagram number				
MICREX-SX SPH	NP1L-RS1 NP1L-RS2 NP1L-RS3	RS-232	User preparing RS232 connection diagram 5)	GT11H-C30-37P(3m)	GT14 Handy	6m	1 GOT for Communication port of general-purpose communication module
	NP1L-RS1 NP1L-RS4	RS-485	User preparing RS485 connection diagram 6)	GT11H-C30-37P(3m) GT11H-C60-37P(6m) GT11H-C100-37P(10m)	GT14 Handy	13m	
	NP1L-RS5	RS-485	User preparing RS485 connection diagram 7)	GT11H-C30-37P(3m) GT11H-C60-37P(6m) GT11H-C100-37P(10m)	GT14 Handy	13m	

*1 Product manufactured by Fuji Electric Co., Ltd. For details of the product, contact Fuji Electric Co., Ltd.

(3) When using the external cable (GT11H-C□□□)

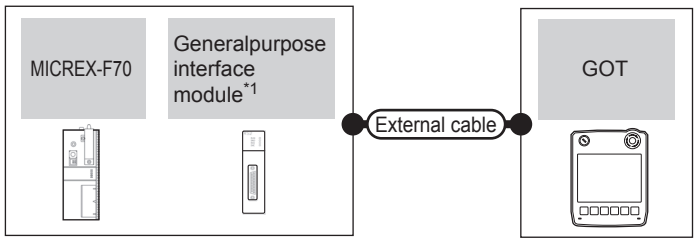

PLC			External cable	GOT model	Total distance	Number of connectable equipment
Model	General-purpose interface module*1	Communication type				
MICREX-SX SPH	NP1L-RS1 NP1L-RS2 NP1L-RS3	RS-232	GT11H-C30(3m) GT11H-C60(6m) User preparing RS232 connection diagram 6)	GT14 Handy	6m	1 GOT for Communication port of general-purpose communication module
	NP1L-RS1 NP1L-RS4	RS-485	GT11H-C30(3m) GT11H-C60(6m) GT11H-C100(10m) User preparing RS485 connection diagram 8)	GT14 Handy	13m	
	NP1L-RS5	RS-485	GT11H-C30(3m) GT11H-C60(6m) GT11H-C100(10m) User preparing RS485 connection diagram 9)	GT14 Handy	13m	

*1 Product manufactured by Fuji Electric Co., Ltd. For details of the product, contact Fuji Electric Co., Ltd.

47.2.5 Connection Diagram

The following diagram shows the connection between the GOT and the PLC.

■ RS-232 cable

(1) Connection diagram

RS232 connection diagram 1)

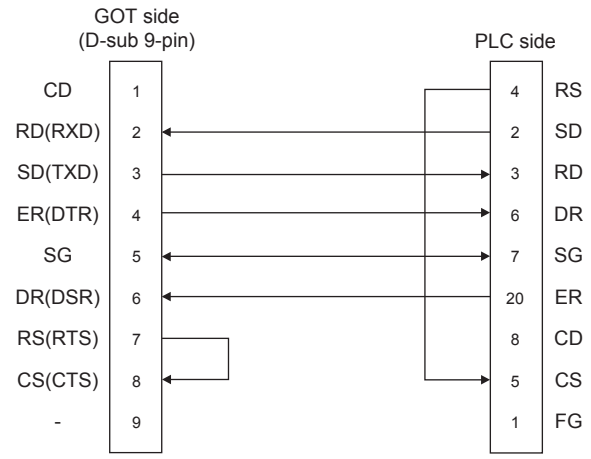

RS232 connection diagram 2)

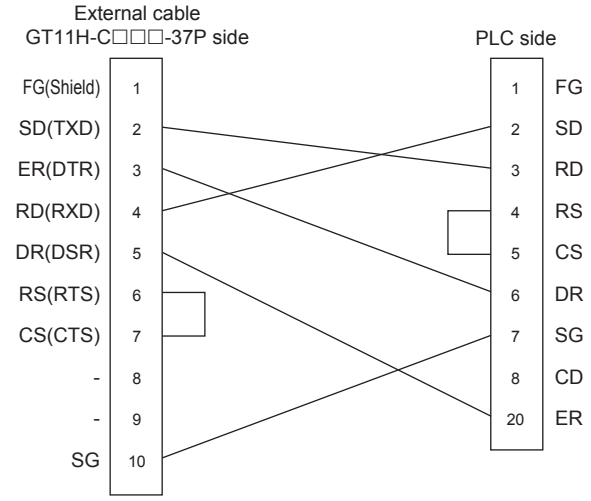

RS232 connection diagram 3)

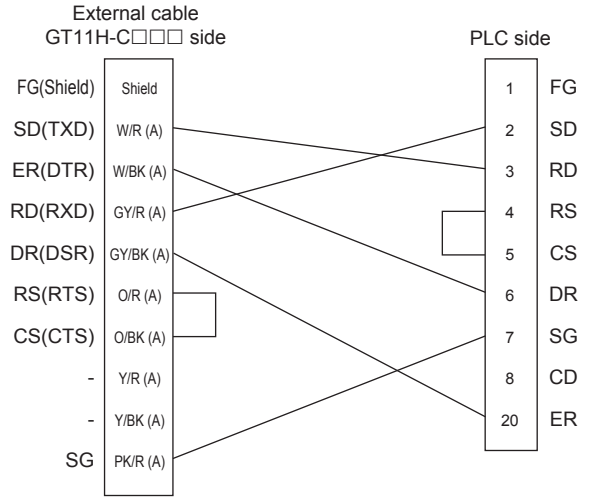

RS232 connection diagram 4)

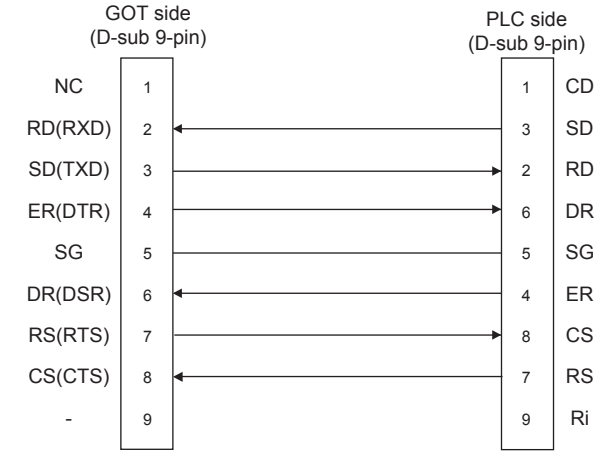

RS232 connection diagram 5)

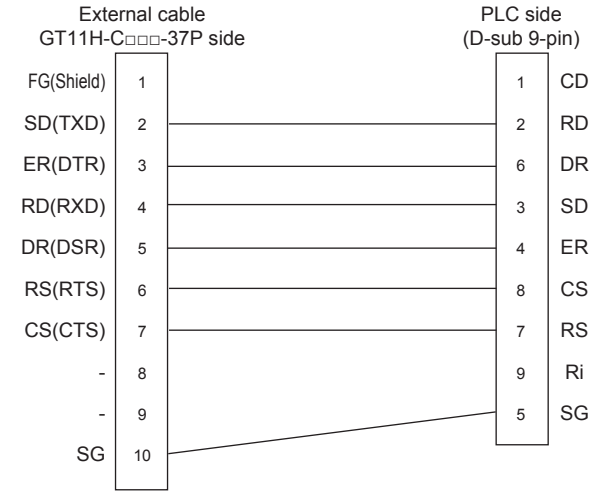

RS232 connection diagram 6)

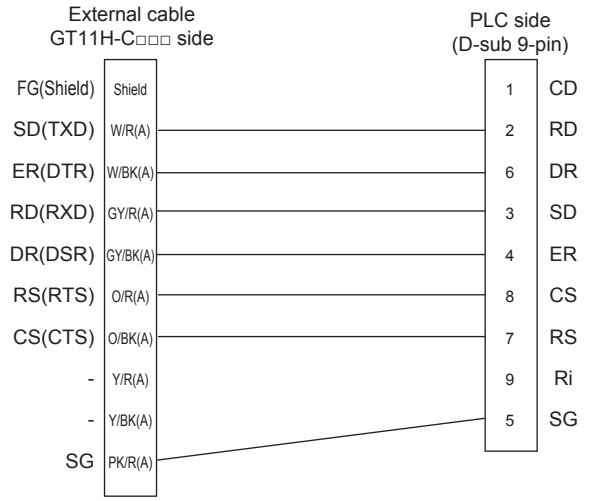

(2) Precautions when preparing a cable

(a) Cable length
The total distance (between the GOT and a controller) of RS-232 cable must be 6m or less.

(b) Connector conversion box side connector
For the connector conversion box side connector, refer to the following.

☞ 6.6 Connector Conversion Box

(c) External cable side connector
For the connector specifications of the external cable side, refer to the following.

☞ 8.2 External Cable, Relay Cable

(d) FUJI PLC side connector
Use the connector compatible with the FUJI PLC side module.
For details, refer to the FUJI PLC user's manual.

■ RS-485 cable

(1) Connection diagram

RS485 connection diagram 1)

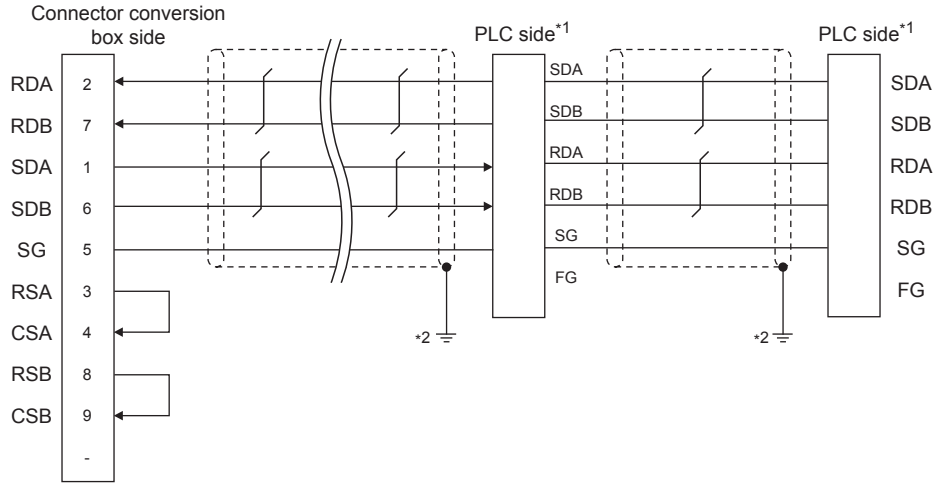

*1 Turn ON the terminating switch of a interface converter which will be a terminal.
*2 Connect FG grounding to the appropriate part of a cable shield line.

RS485 connection diagram 2)

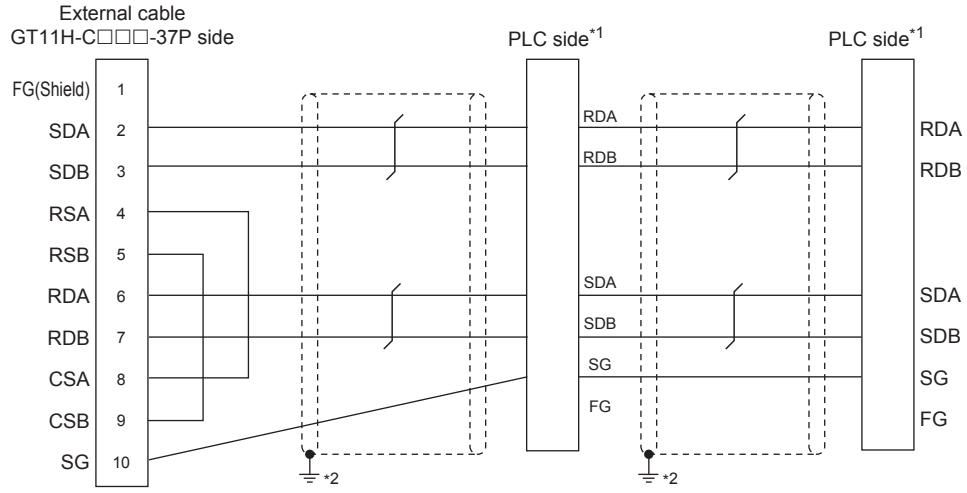

*1 Turn ON the terminating switch of a interface converter which will be a terminal.
*2 Connect FG grounding to the appropriate part of a cable shield line.

RS485 connection diagram 3)

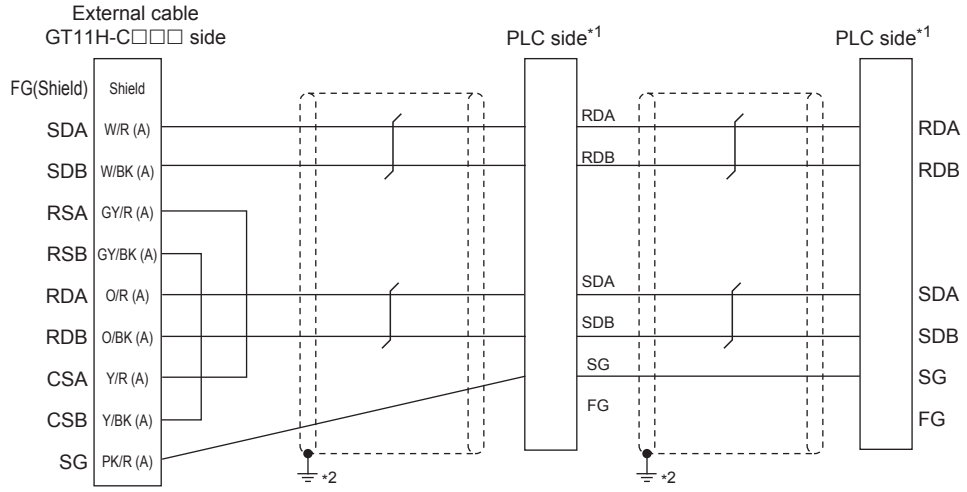

*1 Turn ON the terminating switch of a interface converter which will be a terminal.
*2 Connect FG grounding to the appropriate part of a cable shield line.

RS485 connection diagram 4)

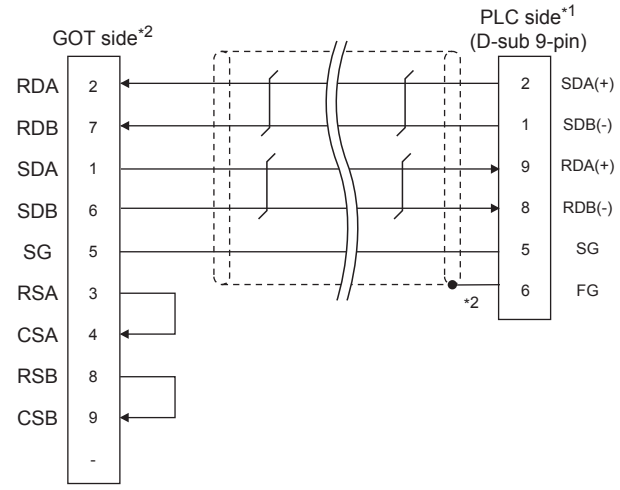

*1 Turn ON the terminating switch of a interface converter which will be a terminal.
*2 Make sure to pull the cable shield line into inside the connector cover, and treat the line end for obtaining shield effect.

RS485 connection diagram 5)

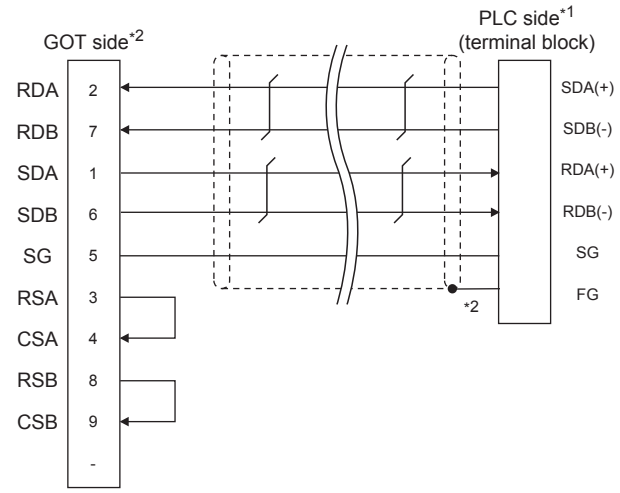

*1 Turn ON the terminating switch of a interface converter which will be a terminal.
*2 Make sure to pull the cable shield line into inside the connector cover, and treat the line end for obtaining shield effect.

RS485 connection diagram 6)

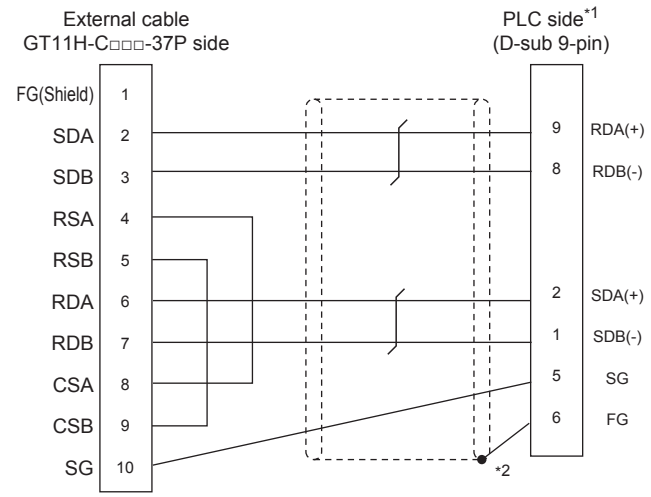

*1 Turn ON the terminating switch of a interface converter which will be a terminal.
*2 Make sure to pull the cable shield line into inside the connector cover, and treat the line end for obtaining shield effect.

RS485 connection diagram 7)

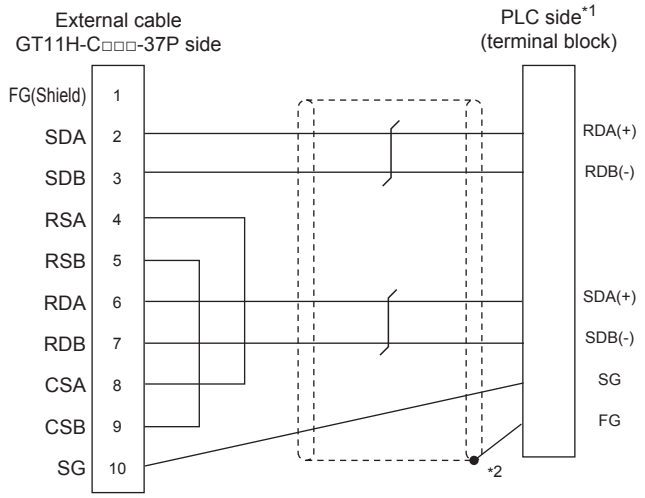

*1 Turn ON the terminating switch of a interface converter which will be a terminal.
*2 Make sure to pull the cable shield line into inside the connector cover, and treat the line end for obtaining shield effect.

RS485 connection diagram 8)

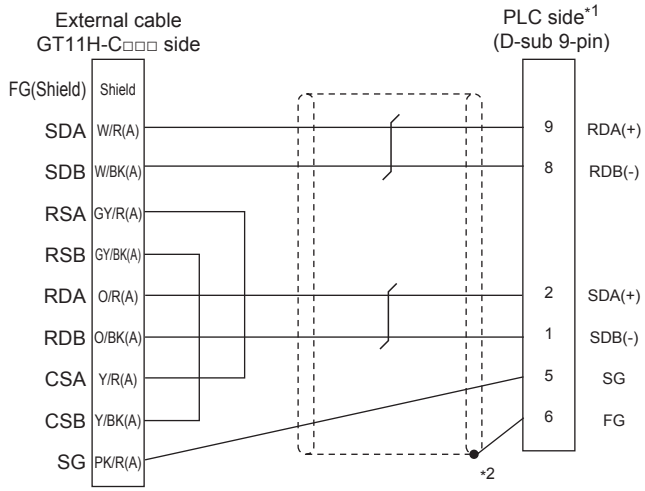

*1 Turn ON the terminating switch of a interface converter which will be a terminal.
*2 Make sure to pull the cable shield line into inside the connector cover, and treat the line end for obtaining shield effect.

RS485 connection diagram 9)

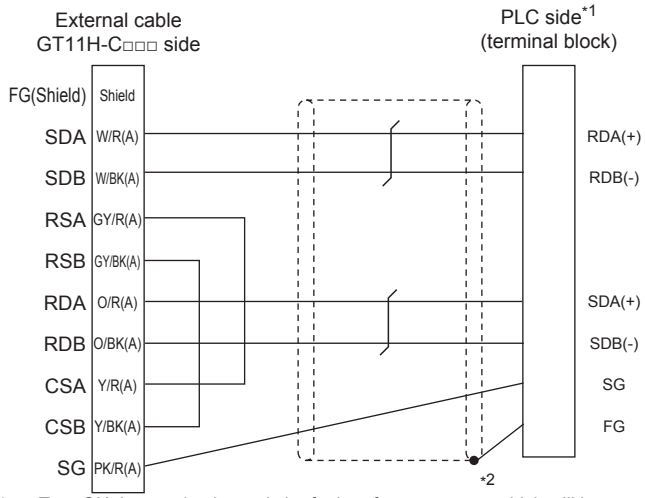

*1 Turn ON the terminating switch of a interface converter which will be a terminal.
*2 Make sure to pull the cable shield line into inside the connector cover, and treat the line end for obtaining shield effect.

(2) Precautions when preparing a cable

(a) Cable length
The total distance (between GOT and controllers) of RS-485 cable must be 13m or less.

(b) Connector conversion box side connector
For the connector conversion box side connector, refer to the following.

☞ 6.6 Connector Conversion Box

(c) External cable side connector
For the connector specifications of the external cable side, refer to the following.

☞ 8.2 External Cable, Relay Cable

(d) FUJI PLC side connector
Use the connector compatible with the FUJI PLC side module.
For details, refer to the FUJI PLC user's manual.

(3) Connecting terminating resistors

(a) FUJI PLC side
When connecting a FUJI PLC to the GOT, a terminating resistor must be connected.

☞ 47.2.7 PLC Side Setting

47.2.6 GOT Side Settings

■ Setting communication interface (Communication settings)

Set the channel of the connected equipment.

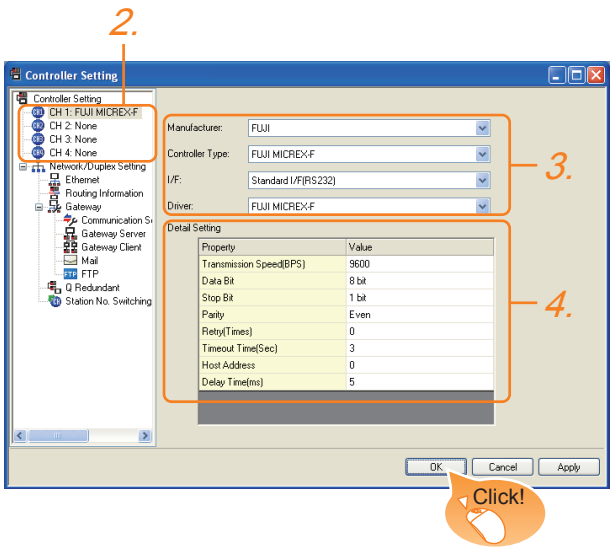

1. Select [Common] → [Controller Setting] from the menu.
2. The Controller Setting window is displayed. Select the channel to be used from the list menu.
3. Set the following items.
   - Controller Type: Set either of the following
     - FUJI MICREX-F Series
     - FUJI MICREX-SX SPH
   - Controller Type: FUJI MICREX-F
   - I/F: Interface to be used
   - Driver: Set either of the following.
     - FUJI MICREX-F Series
     - FUJI MICREX-SX SPH
4. The detailed setting is displayed after Manufacturer, Controller Type, I/F, and Driver are set.
   Make the settings according to the usage environment.
   ☞ ■ Communication detail settings

Click the OK button when settings are completed.

POINT

The settings of connecting equipment can be confirmed in [I/F Communication Setting].
For details, refer to the following.
☞ 18.1.2 I/F communication setting

■ Communication detail settings

Make the settings according to the usage environment.
(For FUJI MICREX-F)

Item	Description	Range
Transmission Speed	Set this item when change the transmission speed used for communication with the connected equipment. (Default: 9600bps)	9600bps, 19200bps, 38400bps, 57600bps, 115200bps
Data Bit	Set this item when change the data length used for communication with the connected equipment. (Default: 8bit)	7bit/8bit
Stop Bit	Set this item when change the data length used for communication with the connected equipment. (Default: 1bit)	1bit/2bit
Parity	Specify whether or not to perform a parity check, and how it is performed during communication. (Default: Even)	None Even Odd
Retry	Set the number of retries to be performed when a communication error occurs. (Default: 0time)	0 to 5times
Timeout Time	Set the time period for a communication to time out. (Default: 3sec)	1 to 30sec
Host Address	Specify the host address (station No. of the GOT to which the PLC is connected) in the connected network. (Default: 0)	0 to 99
Delay Time	Set this item to adjust the transmission timing of the communication request from the GOT. (Default: 5ms)	0 to 300ms

(For FUJI MICREX-SX SPH)

Item	Description	Range
Transmission Speed*1	Set this item when change the transmission speed used for communication with the connected equipment. (Default: 38400bps)	9600bps, 19200bps, 38400bps, 57600bps, 115200bps
Data Bit*1	Set this item when change the data length used for communication with the connected equipment. (Default: 8bit)	7bit/8bit
Stop Bit*1	Set this item when change the data length used for communication with the connected equipment. (Default: 1bit)	1bit/2bit
Parity*1	Specify whether or not to perform a parity check, and how it is performed during communication. (Default: Even)	None Even Odd
Retry	Set the number of retries to be performed when a communication error occurs. (Default: 3time)	0 to 5times
Timeout Time	Set the time period for a communication to time out. (Default: 3sec)	3 to 30sec
Delay Time	Set this item to adjust the transmission timing of the communication request from the GOT. (Default: 0ms)	0 to 300ms

*1 Leave the setting as default. If the set value is changed, communication with the PLC is disabled.

POINT

(1) Host Address
When connecting to PLC by RS-232 communication, set the Host Address to "0".

(2) Communication interface setting by Utility
The communication interface setting can be changed on the Utility's [Communication setting] after writing [Communication Settings] of project data.
For details on the Utility, refer to the following manual.

☞ 11. COMMUNICATION INTERFACE SETTING (COMMUNICATION SETTING)

(3) Precedence in communication settings
When settings are made by GT Designer3 or the Utility, the latest setting is effective.

47.2.7 PLC Side Setting

POINT

FUJI PLC

For details of FUJI PLCs, refer to the following manuals.

☞ FUJI PLC user's Manual

Model		Refer to
RS-232C interface card	NV1L-RS2	■ Connecting to NV1L-RS2, NC1L-RS2
General-purpose interface module	NC1L-RS2	
	NC1L-RS4	■ Connecting to NC1L-RS4
	FFU120B	■ Connecting to FFU120B
RS-232C/485 interface capsule	FFK120A-C10	■ Connecting to FFK120A-C10

■ Connecting to NV1L-RS2, NC1L-RS2

(1) Communication settings

Make the communication settings using a setting switch.

Item	Set value
MODE	Command-setting-type start-stop synchronization, nonsequence format
Transmission speed*1	9600bps, 19200bps
Data bit*1	8bits, 7bits
Parity bit*1	Even or Odd
	Done, None
Stop bit*1	1bit, 2bits
Initializing method	By switch

*1 Adjust the settings with GOT settings.

(2) Settings by switch

Make the communication settings using each setting switch.

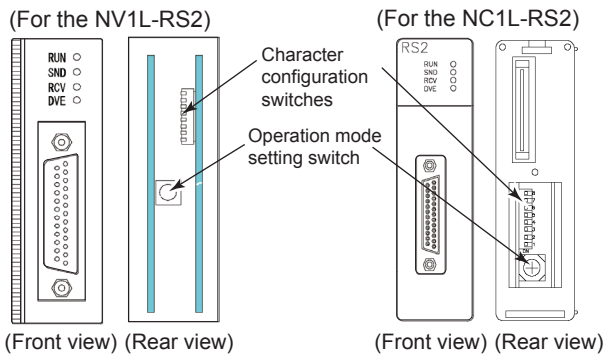

(a) Setting of the MODE

Make the MODE settings using the MODE switch.

MODE	Switch position	
	NV1L-RS2	NC1L-RS2
Command-setting-type start-stop synchronization, nonsequence format	1	1

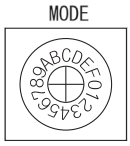

(b) Setting of Transmission speed, Stop bit, Data bit, Parity bit, Initializing method

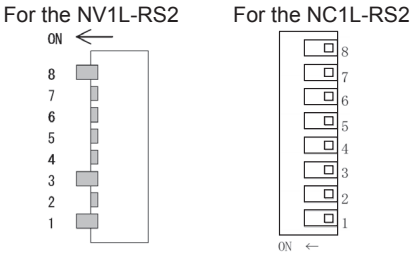

Setting item	Set value	Switch No.							
		1	2	3	4	5	6	7	8
Transmission speed	9600bps	ON	OFF	ON					
	19200bps	OFF	ON	ON					
Stop bit	1bit				ON				
	2bits				OFF				
Data bit	7bits					ON			
	8bits					OFF			
Parity bit	Even						ON		
	Odd						OFF		
	Enable							ON	
	Disable							OFF	
Initializing method	By switch								ON

■ Connecting to NC1L-RS4

(1) Communication settings
Make the communication settings using a setting switch.

Item	Set value
MODE	Command-setting-type start-stop synchronization, nonsequence format
Transmission speed*1	9600bps, 19200bps
Data bit*1	8bits, 7bits
Parity bit*1	Even or Odd
	Done, None
Stop bit*1	1bit, 2bits
Initializing method	By switch
Station No.*1*2	0 to 99
Terminating resistor*3	ON, OFF

*1 Adjust the settings with GOT settings.
*2 Avoid duplication of the station No. with any of the other units.
*3 Turn ON the terminating switch of a general-purpose interface module which will be a terminal.

(2) Settings by switch
Make the communication settings using each setting switch.

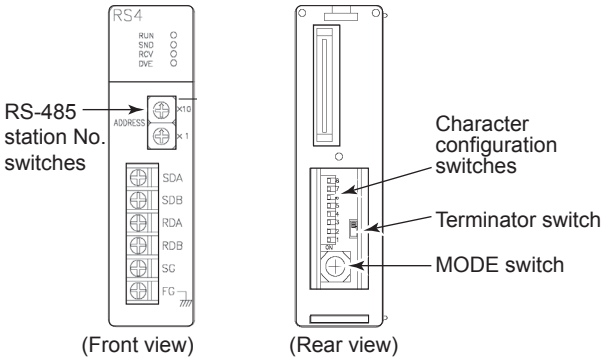

(a) Setting of the MODE
Make the MODE settings using the MODE switch.

MODE	Switch position
Command-setting-type start-stop synchronization, nonsequence format	3

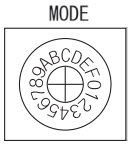

(b) Setting of the station No.
Make the station No. using RS-485 station No. switches.

Station No.
0 to 99

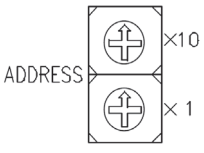

(c) Connecting terminating resistors
Turn ON/OFF the terminating resistor using RS-485 terminating resistor ON/OFF switch.

(d) Setting of Transmission speed, Stop bit, Data bit, Parity bit, Initializing method
Make the settings using the character configuration switches.

Setting item	Set value	Switch No.							
		1	2	3	4	5	6	7	8
Transmission speed	9600bps	ON	OFF	ON					
	19200bps	OFF	ON	ON					
Stop bit	1bit				ON				
	2bits				OFF				
Data bit	7bits					ON			
	8bits					OFF			
Parity bit	Even						ON		
	Odd						OFF		
	Enable							ON	
	Disable							OFF	
Initializing method	By switch								ON

■ Connecting to FFK120A-C10

(1) Communication settings
Make the communication settings using a setting switch.

Item	Set value
MODE*4	Command-setting-type start-stop synchronization, nonsequence format RS-232C 1:1
	Command-setting-type start-stop synchronization, nonsequence format RS-232C 1:1, and RS-485 1:N
	Command-setting-type start-stop synchronization, nonsequence format RS-485 1:N
Transmission speed*1	9600bps, 19200bps
Data bit*1	8bits, 7bits
Parity bit*1	Even or Odd
	Done, None
Stop bit*1	1bit, 2bits
Initializing method	By switch
Station No.*1*2	0 to 99
Terminating resistor*3	ON, OFF
T-link channel switch	FUJI PLC user's Manual
T-link terminating resistor	

*1 Adjust the settings with GOT settings.
*2 Avoid duplication of the station No. with any of the other units.
*3 Turn ON the terminating switch of the RS-232C/485 interface capsule which will be a terminal.
*4 Set as necessary.

(2) Settings by switch
Make the communication settings using each setting switch.

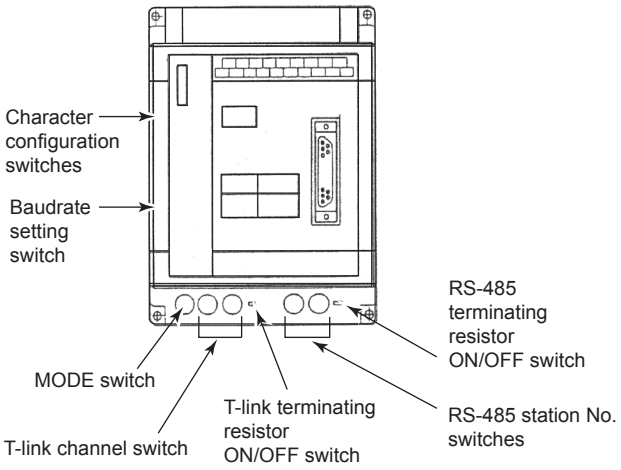

(a) Setting of the MODE
Make the MODE settings using the MODE switch.

MODE	Switch position
Command-setting-type start-stop synchronization, nonsequence format RS-232C 1:1	1
Command-setting-type start-stop synchronization, nonsequence format RS-232C 1:1, and RS-485 1:N	2
Command-setting-type start-stop synchronization, nonsequence format RS-485 1:N	3

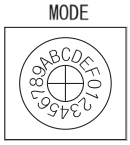

(b) Setting of the station No.
Make the station No. using RS-485 station No. switches.

Station No.
0 to 99

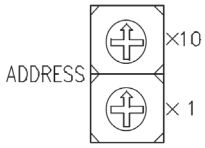

(c) Connecting terminating resistors
Turn ON/OFF the terminating resistor using RS-485 terminating resistor ON/OFF switch.

(d) Setting of Stop bit, Data bit, Parity bit, Initializing method
Make the settings using the character configuration switches.

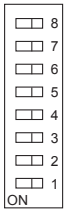

Setting item	Set value	Switch No. 1	2	3	4	5	6	7	8
Unused		OFF	OFF	OFF					
Stop bit	1bit				ON				
	2bits				OFF				
Data bit	7bits					ON			
	8bits					OFF			
Parity bit	Even						ON		
	Odd						OFF		
	Enable							ON	
	Disable							OFF	
Initializing method	By switch								ON

(e) Transmission speed settings
Make the settings using the baudrate setting switches.

Setting item	Set value	Switch No. 1	2	3	4	5	6	7	8
Transmission speed	9600bps	OFF	OFF	OFF	OFF	OFF	ON	OFF	OFF
	19200bps	OFF	OFF	OFF	OFF	OFF	OFF	ON	OFF

■ Connecting to FFU120B

(1) Communication settings
Make the communication settings using a setting switch.

Item	Set value
MODE	Command-setting-type start-stop synchronization, nonsequence format
Transmission speed*1	9600bps, 19200bps
Data bit*1	8bits, 7bits
Parity bit*1	Even or Odd
	Done, None
Stop bit*1	1bit, 2bits
Initializing method	By switch
Station No.*1*2	0 to 99
Terminating resistor*3	ON, OFF

*1 Adjust the settings with GOT settings.
*2 Avoid duplication of the station No. with any of the other units.
*3 Turn ON the terminating switch of a general-purpose interface module which will be a terminal.

(2) Settings by switch
Make the communication settings using each setting switch.

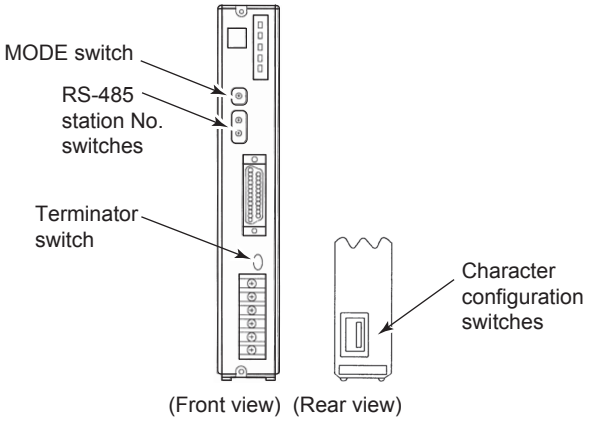

(a) Setting of the MODE
Make the MODE settings using the MODE switch.

MODE	Switch position
Command-setting-type start-stop synchronization, nonsequence format RS-232C 1:1	1
Command-setting-type start-stop synchronization, nonsequence format RS-232C 1:1, and RS-485 1:N	2
Command-setting-type start-stop synchronization, nonsequence format RS-485 1:N	3

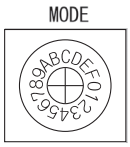

(b) Setting of the station No.
Make the station No. using RS-485 station No. switches.

Station No.
0 to 99

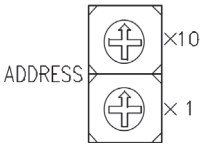

(c) Connecting terminating resistors
Turn ON/OFF the terminating resistor using RS-485 terminating resistor ON/OFF switch.

(d) Setting of Transmission speed, Stop bit, Data bit, Parity bit, Initializing method
Make the settings using the character configuration switches.

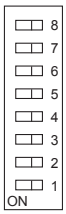

Setting item	Set value	Switch No.							
		1	2	3	4	5	6	7	8
Transmission speed	9600bps	ON	OFF	ON					
	19200bps	OFF	ON	ON					
Stop bit	1bit				ON				
	2bits				OFF				
Data bit	7bits					ON			
	8bits					OFF			
Parity bit	Even						ON		
	Odd						OFF		
	Enable							ON	
	Disable							OFF	
Initializing method	By switch								ON

■ Connecting to NP1L-RS1, NP1L-RS2, NP1L-RS3, NP1L-RS4, NP1L-RS5

(1) Communication settings

Make the communication settings using setting switches.

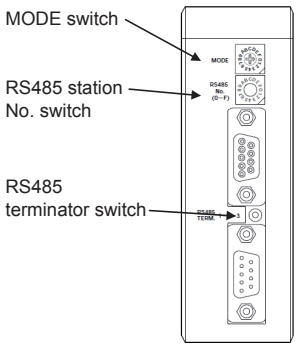

Switch	Item	Set value
MODE switch	MODE	1 to 3*1
RS485 station No. switch	Station No.	*2
RS485 terminator switch	Terminator	*3

*1 Set the MODE switch so that the communication port of the general communication module to be connected to the GOT operates as a loader.
*2 The switch is not used for connection with the GOT.
*3 Turn ON the terminating switch of the general communication module which will be a terminal.

■ Station number setting

Set each station number so that no station number overlaps.

The station number can be set without regard to the cable connection order. There is no problem even if station numbers are not consecutive.

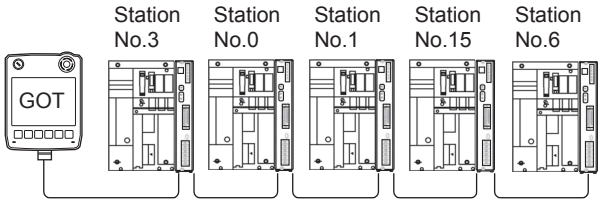

Examples of station number setting

(a) Direct specification

Specify the station No. of the PLC to be changed when setting device.

Specification range
0 to 99

47.3 Ethernet Connection

47.3.1 System Configuration for connecting to MICREX-SX SPH

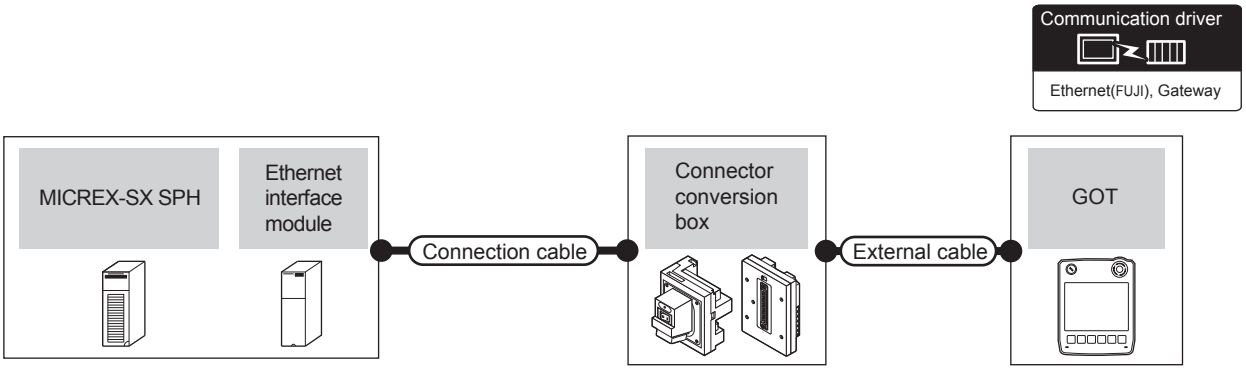

PLC		Connection cable*1	Connector conversion box	External cable*3	GOT Model	Maximum segment length	Number of connectable Model name equipment
Model name	Ethernet interface module*4	Cable model					
SPH200 SPH300 SPH2000 SPH3000	NP1L-ET1	• 10BASE-T Shielded twisted pair cable (STP) or unshielded twisted pair cable (UTP) : Category 3, 4, and 5 • 100BASE-TX Shielded twisted pair cable (STP): Category 5 and 5e	GT16H-CNB-42S	GT14H-C30-42P (3m) GT14H-C60-42P (6m) GT14H-C100-42P (10m)	GT14 Handy	100m*2	When PLC: GOT is 1: N The following shows the number of GOTs for 1 PLC 128 or less
SPH2000 SPH3000	-		GT16H-CNB-37S	GT11H-C30-37P (3m) GT11H-C60-37P (6m) GT11H-C100-37P(10m)			When PLC: GOT is 1: N The following shows the number of GOTs for 1 PLC 8 or less
			GT16H-CNB-42S	GT14H-C30-42P (3m) GT14H-C60-42P (6m) GT14H-C100-42P (10m)			When PLC: GOT is 1: N The following shows the number of GOTs for 1 PLC 128 or less
			GT16H-CNB-37S	GT11H-C30-37P (3m) GT11H-C60-37P (6m) GT11H-C100-37P (10m)			When PLC: GOT is 1: N The following shows the number of GOTs for 1 PLC 10 or less

*1 The destination connected with the twisted pair cable varies with the configuration of the applicable Ethernet network system.
Connect to the Ethernet module, hub, transceiver or other system equipment corresponding to the applicable Ethernet network system.
Use cables, connectors, and hubs that meet the IEEE802.3 10BASE-T/100BASE-TX standards.

*2 A length between a hub and a node.
The maximum distance differs depending on the Ethernet device to be used.
The following shows the number of the connectable nodes when a repeater hub is used.
- 10BASE-T: Max. 4 nodes for a cascade connection (500m)
- 100BASE-TX: Max. 2 nodes for a cascade connection (205m)

When switching hubs are used, the cascade connection between the switching hubs has no logical limit for the number of cascades.
For the limit, contact the switching hub manufacturer.

*3 Use C or later version of GT11H-C□□-37P.

*4 Product manufactured by Fuji Electric Co., Ltd. For details of the product, contact Fuji Electric Co., Ltd.

47.3.2 GOT Side Settings

■ Setting communication interface (Communication settings)

Set the channel of the connected equipment.

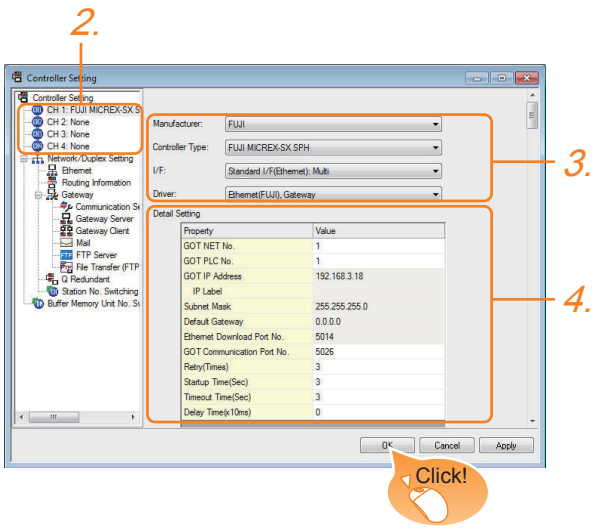

1. Select [Common] → [Controller Setting] from the menu.
2. The Controller Setting window is displayed. Select the channel to be used from the list menu.
3. Set the following items.
   - Manufacturer: FUJI
   - Controller Type: FUJI MICREX-SX
   - I/F: Interface to be used
   - Driver: Ethernet (FUJI), Gateway
4. The detailed setting is displayed after Manufacturer, Controller Type, I/F, and Driver are set. Make the settings according to the usage environment.

   ☞ ■ Communication detail settings

Click the [OK] button when settings are completed.

POINT

The settings of connecting equipment can be confirmed in [I/F Communication Setting]. For details, refer to the following.

☞ 18.1.2 I/F communication setting

■ Communication detail settings

Make the settings according to the usage environment.

Property	Value
GOT NET No.	1
GOT PLC No.	1
GOT IP Address	192.168.3.18
IP Label	
Subnet Mask	255.255.255.0
Default Gateway	0.0.0.0
Ethernet Download Port No.	5014
GOT Communication Port No.	5026
Retry(Times)	3
Startup Time(Sec)	3
Timeout Time(Sec)	3
Delay Time(x10ms)	0

Item	Description	Range
GOT NET No.	Set the network No. of the GOT. (Default: 1)	1 to 239
GOT PC No.*2	Set the station No. of the GOT. (Default: 1)	1 to 64
GOT IP Address*1	Set the IP address of the GOT. (Default: 192.168.3.18)	0.0.0.0 to 255.255.255.255
Ethernet Download Port No.*1	Set the subnet mask for the sub network. (Only for connection via router) If the sub network is not used, the default value is set. (Default: 255.255.255.0)	0.0.0.0 to 255.255.255.255
Default Gateway*1	Set the router address of the default gateway where the GOT is connected. (Only for connection viarouter) (Default: 0.0.0.0)	0.0.0.0 to 255.255.255.255
Ethernet Download Port No.*1	Set the GOT port No. for Ethernet download. (Default: 5014)	1024 to 5010, 5014 to 65534 (Except for 5011, 5012, 5013, and 49153)
GOT Communication Port No.	Set the GOT port No. for the connection with the Ethernet module. (Default:5026)	1024 to 5010, 5014 to 65534 (Except for 5011, 5012, 5013, and 49153)
Retry	Set the number of retries to be performed when a communication timeout occurs. When receiving no response after retries, the communication times out. (Default: 3times)	0 to 5 times
Startup Time	Specify the time period from the GOT startup until GOT starts the communication with the PLC CPU. (Default: 3sec)	3 to 255 sec
Timeout Time	Set the time period for a communication to time out. (Default: 3sec)	3 to 90 sec
Delay Time	Set the delay time for reducing the load of the network/destination PLC. (Default: 0ms)	0 to 10000 (10ms)

*1 Click the [Setting] button and perform the setting in the [GOT IP Address Setting] screen.

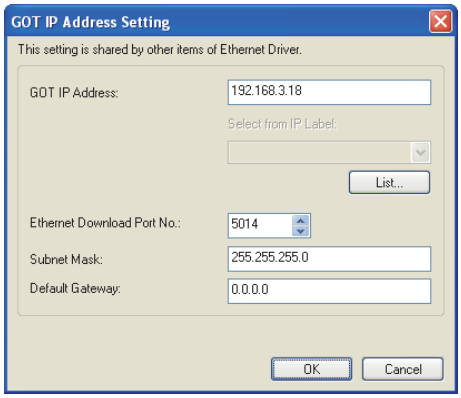

*2 Each of [GOT PLC No.] set in the communication detail setting and [PLC No.] set in the Ethernet setting must be set to different station numbers.

■ Ethernet setting

■ Ethernet setting

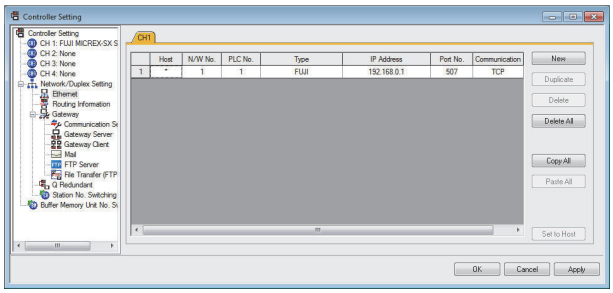

Item	Description	Set value
Host	The host is displayed. (The host is indicated with an asterisk (*).)	—
N/W No.	Set the network No. of the connected Ethernet module. (Default: 1)	1 to 239
PC No.*2	Set the station No. of the connected the PLC. (Default: 1)	1 to 254
Type	FUJI (fixed)	FUJI (fixed)
IP address*1	Set the IP address of the connected the PLC. (Default: 192.168.0.1)	PLC side IP address
Port No.*3	Set the port No. of the connected the PLC. (Default: 507)	251 to 65531
Communication format	TCP (fixed)	TCP (fixed)

*1 Connection with the PLC is unavailable if the IP address is the default value. Set the value to the IP address of the PLC to be connected.

*2 Each of [GOT PLC No.] set in the communication detail setting and [PLC No.] set in the Ethernet setting must be set to different station numbers.

■ Communication detail settings

*3 Make sure that the port No. is equivalent to "Self port reference No. in the PLC + 251".

■ Setting the IP address and self port reference No.

POINT

(1) Communication interface setting by the Utility
The communication interface setting can be changed on the Utility's [Communication setting] after writing [Communication Settings] of project data.
For details on the Utility, refer to the following manual.

GT□ User's Manual

(2) Precedence in communication settings
When settings are made by GT Designer3 or the Utility, the latest setting is effective.

47.3.3 PLC side setting (MICREX-SX SPH)

POINT

FUJI PLC

For details of FUJI PLCs, refer to the following manuals.

☞ FUJI PLC user's Manual

■ Setting the IP address and self port reference No.

Set the IP address and self port reference No. using a peripheral tool of the PLC.

Item	Set value	Range
IP Address*1	[ ].[ ].[ ].[ ]	PLC side IP address
Subnet Mask	[ ].[ ].[ ].[ ]	PLC side setting
Default Gateway IP Address	[ ].[ ].[ ].[ ]	
Self port reference No.*2	0 to 65280	

*1 Adjust the settings with GOT settings.

☞ ■ Ethernet setting

*2 Make sure that "Self port reference No. + 251" is equivalent to the port No. in the GOT.

☞ ■ Ethernet setting

47.4 Device Range that Can Be Set

For details on the device range of controllers that can be used on GT14 Handy, refer to the following manuals.

☞ GT Designer3 Version1 Screen Design Manual (Fundamentals)

☞ GOT1000 Series Connection Manual (Non-Mitsubishi Products 2) for GT Works3

47.5 Precautions

■ Station No. settings of the PLC side

In the system configuration, the PLC with the station number set with the host address must be included.
For details of host address setting, refer to the following.

☞ ■ Communication detail settings

■ System configuration of the PLC side

GOT can communicate in a system configuration where NC1L-PS4, FFU120B and FFK120A-C10 are mixed.
When using FFK120A-C10, the number of PLCs that can communicate is at most 6 units.

■ GOT clock control

The GOT clock function is available only for the PLC with the station number set with the host address.
For details of host address setting, refer to the following.

☞ ■ Communication detail settings

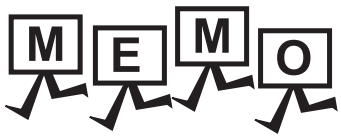
MEMO

48. CONNECTION TO FUJI TEMPERATURE CONTROLLER

48.1 Connectable Model List

The following table shows the connectable models.

Series	Model	Clock	Communication type	GT14 Handy	Refer to
Micro Controller X	PXR3	×	RS-232	○	48.2.1
	PXR4				
	PXR5				
	PXR9				
	PXG4	×	RS-232	○	48.2.2
	PXG5				
	PXG9				
	PXH9				

48.2 System Configuration

48.2.1 Connecting to PXR3, PXR4, PXR5 or PXR9

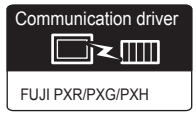

(1) When using the connector conversion box

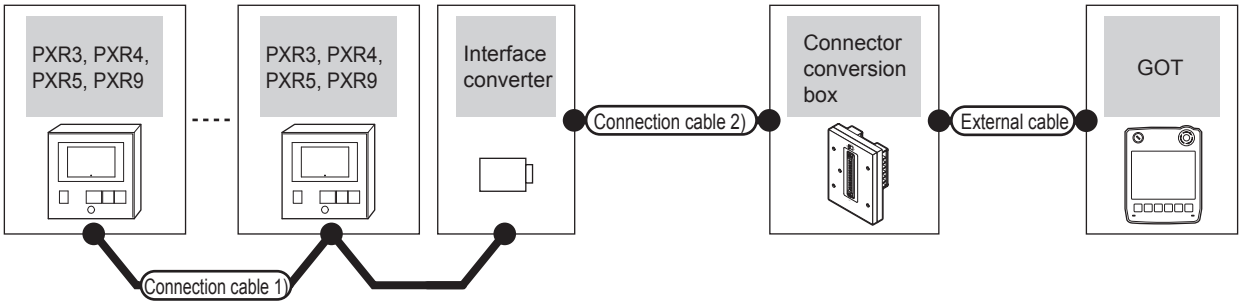

Temperature controller	Connection cable 1)		Interface converter		Connection cable 2)	Connector conversion box	External cable	GOT model	Total distance *4	Number of connectable equipment
Model	Cable model Connection diagram number	Max. distance	Model	Communication type	Cable model Connection diagram number					
PXR3 PXR4 PXR5 PXR9	User preparing RS485 connection diagram 1)	500m	RC-77*1	RS-232	User preparing RS232 connection diagram 1)	GT11H-CNB-37S	GT11H-C30-37P (3m)	GT14 Handy	6m	Up to 31 temperature controllers for 1 GOT
	User preparing RS485 connection diagram 2)	500m	SI-30A*2	RS-232	User preparing RS232 connection diagram 4)			GT14 Handy	6m	
	User preparing RS485 connection diagram 3)	500m	KS-485*3	RS-232						

*1 Product manufactured by SYSMEXRA CO., LTD. For details of the product, contact SYSMEXRA CO., LTD.
*2 Product manufactured by LINEEYE CO., LTD. For details of the product, contact LINEEYE CO., LTD.
*3 Product manufactured by System Sacom corp. For details of the product, contact System Sacom corp.
*4 The distance from the converter to the GOT.

(2) When using the external cable (GT11H-C□□□-37P)

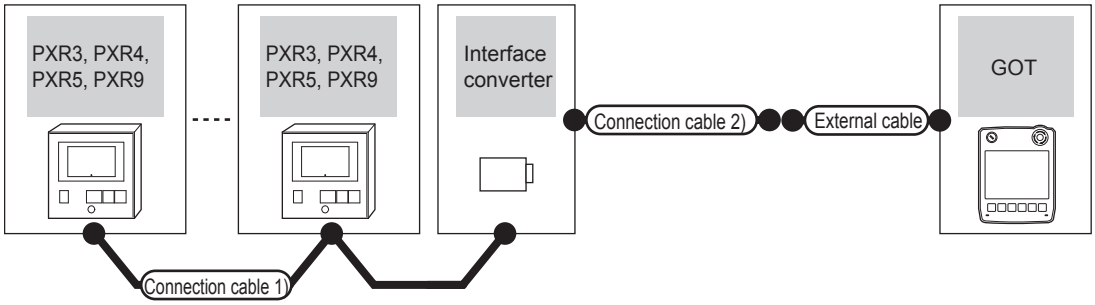

Temperature controller	Connection cable 1)		Interface converter		Connection cable 2)	External cable	GOT model	Total distance *4	Number of connectable equipment
Model	Cable model Connection diagram number	Max. distance	Model	Communication type	Cable model Connection diagram number				
PXR3 PXR4 PXR5 PXR9	User preparing RS485 connection diagram 1)	500m	RC-77*1	RS-232	User preparing RS232 connection diagram 2)	GT11H-C30-37P(3m)	GT14 Handy	6m	Up to 31 temperature controllers for 1 GOT
	User preparing RS485 connection diagram 2)	500m	SI-30A*2	RS-232	User preparing RS232 connection diagram 5)	GT11H-C30-37P(3m)	GT14 Handy	6m	
	User preparing RS485 connection diagram 3)	500m	KS-485*3	RS-232					

*1 Product manufactured by SYSMEXRA CO., LTD. For details of the product, contact SYSMEXRA CO., LTD.
*2 Product manufactured by LINEEYE CO., LTD. For details of the product, contact LINEEYE CO., LTD.
*3 Product manufactured by System Sacom corp. For details of the product, contact System Sacom corp.
*4 The distance from the converter to the GOT.

(3) When using the external cable (GT11H-C□□□)

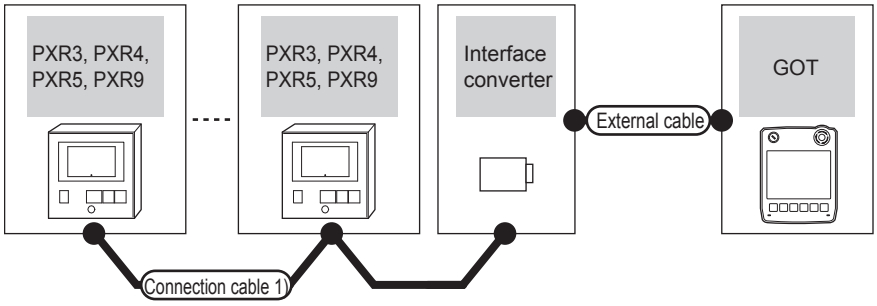

Temperature controller	Connection cable 1)		Interface converter		External cable	GOT model	Total distance *4	Number of connectable equipment
Model	Cable model Connection diagram number	Max. distance	Model	Communication type				
PXR3 PXR4 PXR5 PXR9	User preparing RS485 connection diagram 1)	500m	RC-77*1	RS-232	GT11H-C30(3m) GT11H-C60(6m) User preparing RS232 connection diagram 3)	GT14 Handy	6m	Up to 31 temperature controllers for 1 GOT
	User preparing RS485 connection diagram 2)	500m	SI-30A*2	RS-232	GT11H-C30(3m) GT11H-C60(6m) User preparing RS232 connection diagram 6)	GT14 Handy	6m	
	User preparing RS485 connection diagram 3)	500m	KS-485*3	RS-232				

*1 Product manufactured by SYSMEXRA CO., LTD. For details of the product, contact SYSMEXRA CO., LTD.
*2 Product manufactured by LINEEYE CO., LTD. For details of the product, contact LINEEYE CO., LTD.
*3 Product manufactured by System Sacom corp. For details of the product, contact System Sacom corp.
*4 The distance from the converter to the GOT.

48.2.2 Connecting to PXG4, PXG5, PXG9 or PXH9

■ When connecting to one temperature controller

Communication driver

FUJI PXR/PXG/PXH

(1) When using the connector conversion box

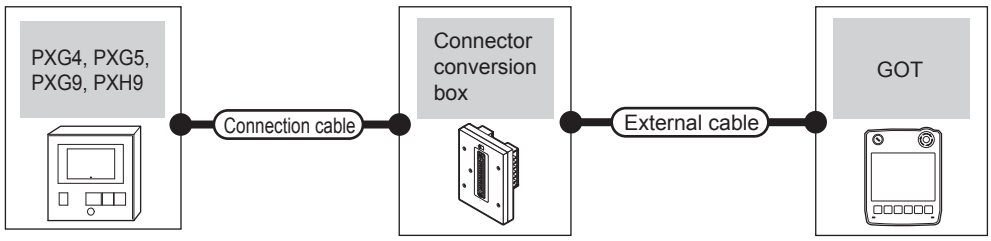

Temperature controller		Connection cable	Connector conversion box	External cable	GOT model	Total distance	Number of connectable equipment
Model	Communication type	Cable model Connection diagram number					
PXG4 PXG5 PXG9 PXH9	RS-232	ZZPPXH1*TK4H4563*1	GT11H-CNB-37S	GT11H-C30-37P(3m)	GT14 Handy	6m	1 temperature controller for 1 GOT

*1 Product manufactured by Fuji Electric Co., Ltd. For details of the product, contact Fuji Electric Co., Ltd.

(2) When using the external cable (GT11H-C□□□-37P)

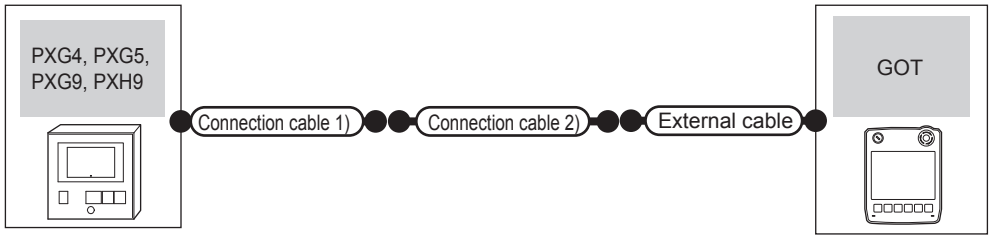

Temperature controller		Connection cable 1)	Connection cable 2)	External cable	GOT model	Total distance	Number of connectable equipment
Model	Communication type	Cable model	Connection diagram number				
PXG4 PXG5 PXG9 PXH9	RS-232	ZZPPXH1*TK4H4563*1	User preparing RS232 connection diagram 10)	GT11H-C30-37P(3m)	GT14 Handy	6m	1 temperature controller for 1 GOT

*1 Product manufactured by Fuji Electric Co., Ltd. For details of the product, contact Fuji Electric Co., Ltd.

(3) When using the external cable (GT11H-C□□□)

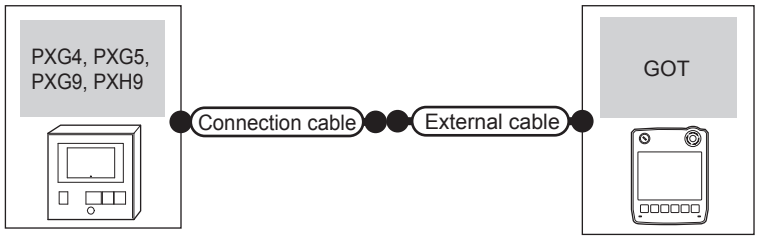

Temperature controller		Connection cable	External cable	GOT model	Total distance	Number of connectable equipment
Model	Communication type	Cable model				
PXG4 PXG5 PXG9 PXH9	RS-232	ZZPPXH1*TK4H4563*1	GT11H-C30(3m) GT11H-C60(6m) User preparing RS232 connection diagram 11)	GT14 Handy	6m	1 temperature controller for 1 GOT

*1 Product manufactured by Fuji Electric Co., Ltd. For details of the product, contact Fuji Electric Co., Ltd.

■ When connecting to multiple temperature controllers (RS-232 communication)

(1) When using the connector conversion box

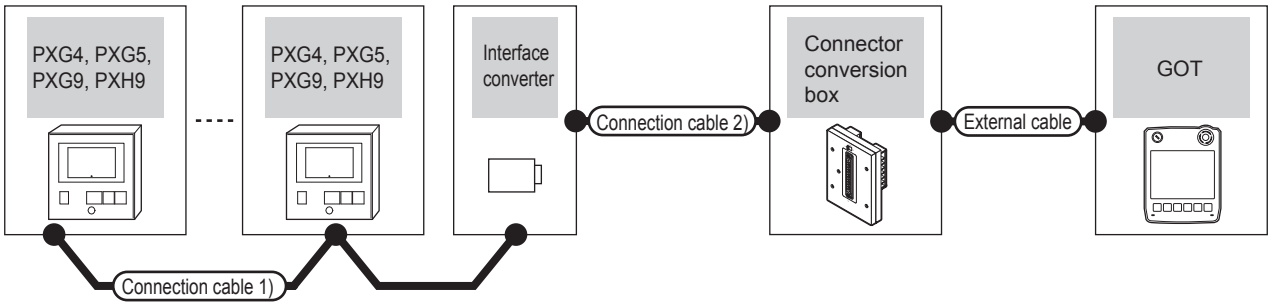

Temperature controller	Connection cable 1)		Interface converter		Connection cable 2)	Connector conversion box	External cable	GOT model	Total distance	Number of connectable equipment
Model	Cable model Connection diagram number	Max. distance	Model	Model	Cable model Connection diagram number					
PXG4 PXG5 PXG9 PXH9	User preparing RS485 connection diagram 1)	500m	RC-77*1	RS-232	User preparing RS232 connection diagram 1)	GT11H-CNB-37S	GT11H-C30-37P (3m)	GT14 Handy	6m	Up to 31 temperature controllers for 1 GOT
	User preparing RS485 connection diagram 4)	500m	K3SC-10*2	RS-232	User preparing RS232 connection diagram 7)			GT14 Handy	6m	

*1 Product manufactured by SYSMEXRA CO., LTD. For details of the product, contact SYSMEXRA CO., LTD.
*2 Product manufactured by OMRON Corporation. For details on the product, contact OMRON Corporation.

(2) When using the external cable (GT11H-C□□□-37P)

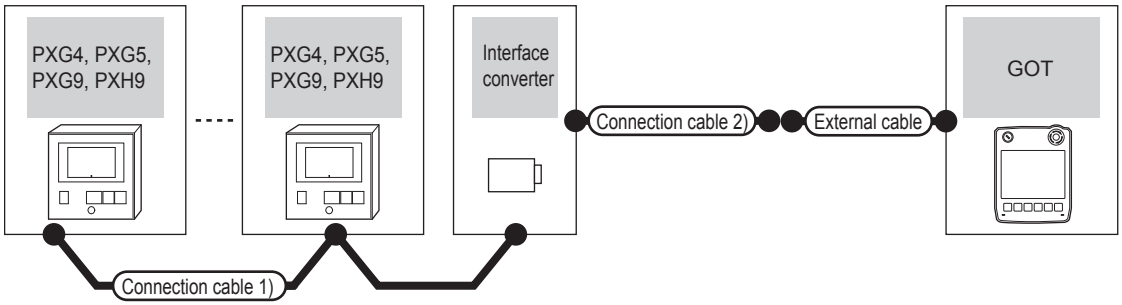

Temperature controller	Connection cable 1)		Interface converter		Connection cable 2)	External cable	GOT model	Total distance	Number of connectable equipment
Model	Cable model Connection diagram number	Max. distance	Model	Model	Cable model Connection diagram number				
PXG4 PXG5 PXG9 PXH9	User preparing RS485 connection diagram 1)	500m	RC-77*1	RS-232	User preparing RS232 connection diagram 2)	GT11H-C30-37P(3m)	GT14 Handy	6m	Up to 31 temperature controllers for 1 GOT
	User preparing RS485 connection diagram 4)	500m	K3SC-10*2	RS-232	User preparing RS232 connection diagram 8)	GT11H-C30-37P(3m)	GT14 Handy	6m	

*1 Product manufactured by SYSMEXRA CO., LTD. For details of the product, contact SYSMEXRA CO., LTD.
*2 Product manufactured by OMRON Corporation. For details on the product, contact OMRON Corporation.

(3) When using the external cable (GT11H-C□□□)

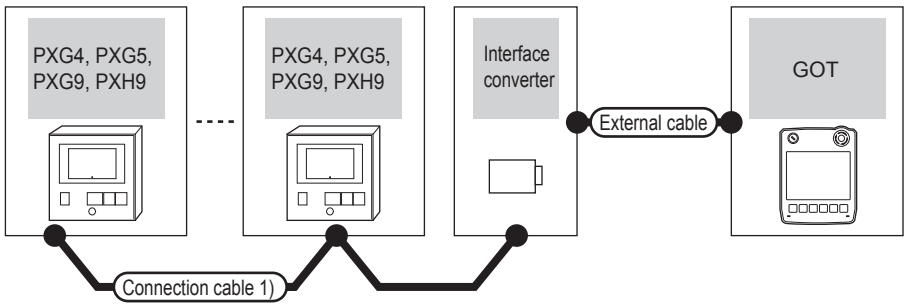

Temperature controller	Connection cable 1)		Interface converter		External cable	GOT model	Total distance	Number of connectable equipment
Model	Cable model Connection diagram number	Max. distance	Model	Model				
PXG4 PXG5 PXG9 PXH9	User preparing RS485 connection diagram 1)	500m	RC-77*1	RS-232	GT11H-C30(3m) GT11H-C60(6m) User preparing RS232 connection diagram 3)	GT14 Handy	6m	Up to 31 temperature controllers for 1 GOT
	User preparing RS485 connection diagram 4)	500m	K3SC-10*2	RS-232	GT11H-C30(3m) GT11H-C60(6m) User preparing RS232 connection diagram 9)	GT14 Handy	6m	

*1 Product manufactured by SYSMEXRA CO., LTD. For details of the product, contact SYSMEXRA CO., LTD.

*2 Product manufactured by OMRON Corporation. For details on the product, contact OMRON Corporation.

48.3 Connection Diagram

The following diagram shows the connection between the GOT and the temperature controller.

48.3.1 RS-232 cable

■ Connection diagram

RS232 connection diagram 1)

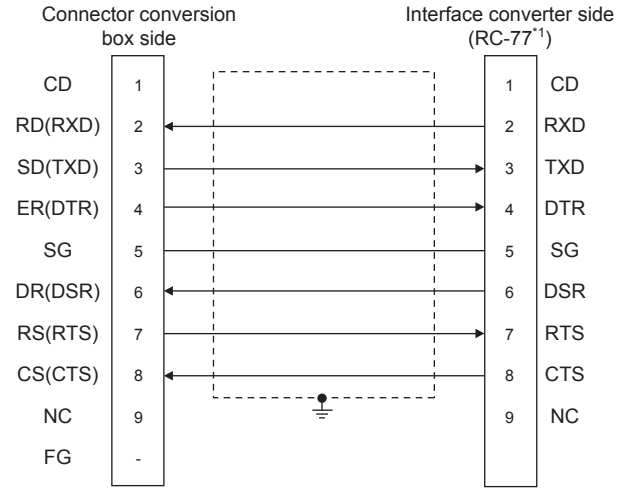

*1 Use the interface converter in the DCE mode.

RS232 connection diagram 2)

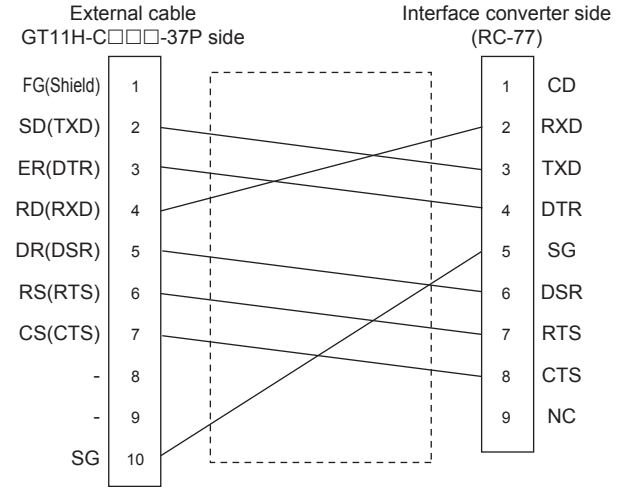

RS232 connection diagram 3)

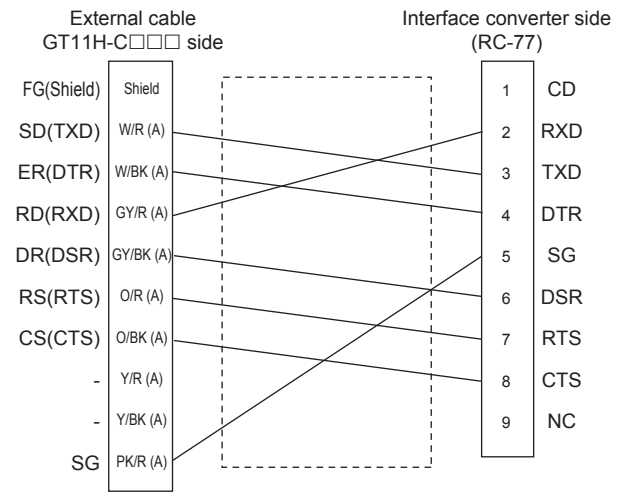

RS232 connection diagram 4)

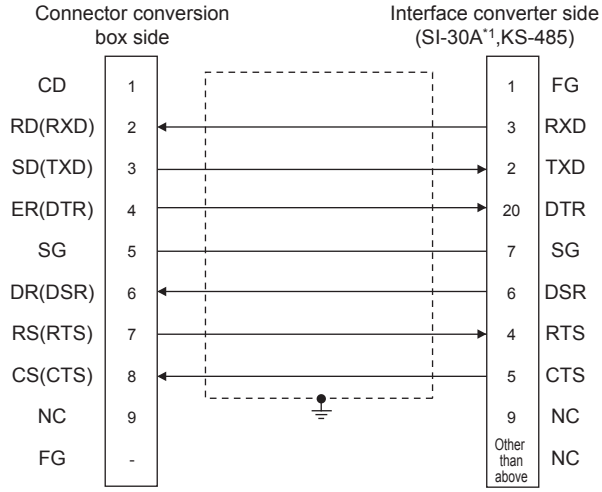

*1 Use the interface converter in the DCE mode.

RS232 connection diagram 5)

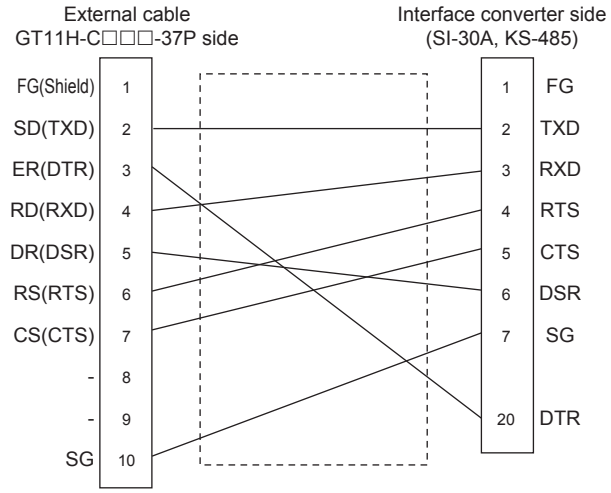

RS232 connection diagram 6)

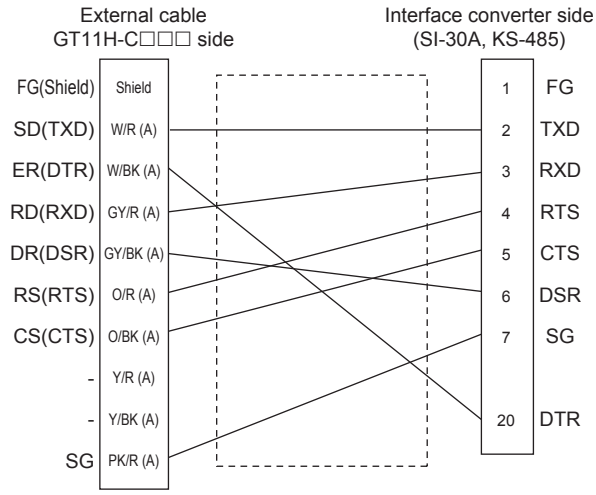

RS232 connection diagram 7)

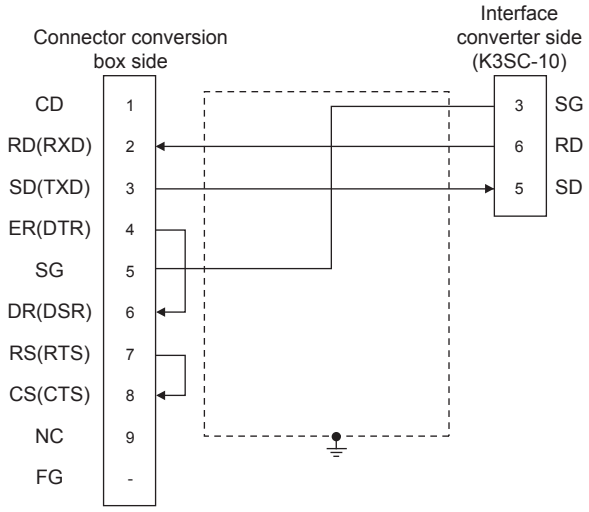

RS232 connection diagram 8)

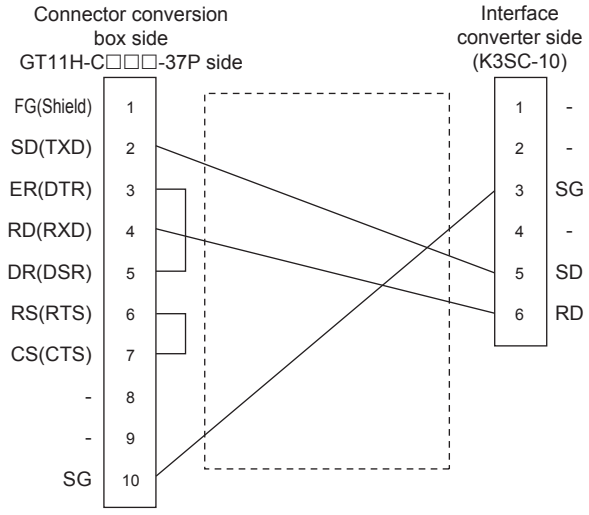

RS232 connection diagram 9)

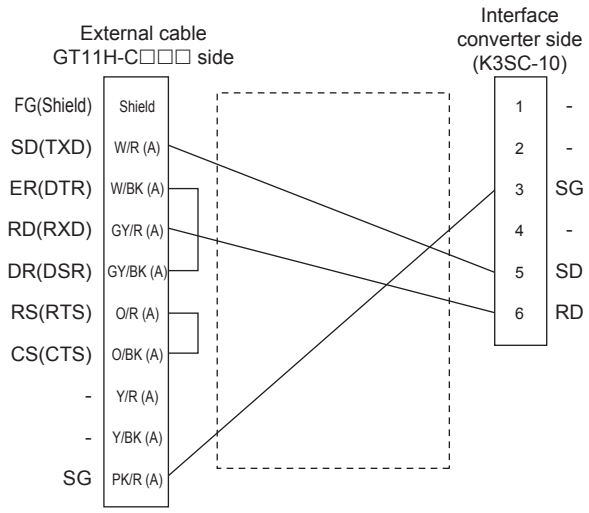

RS232 connection diagram 10)

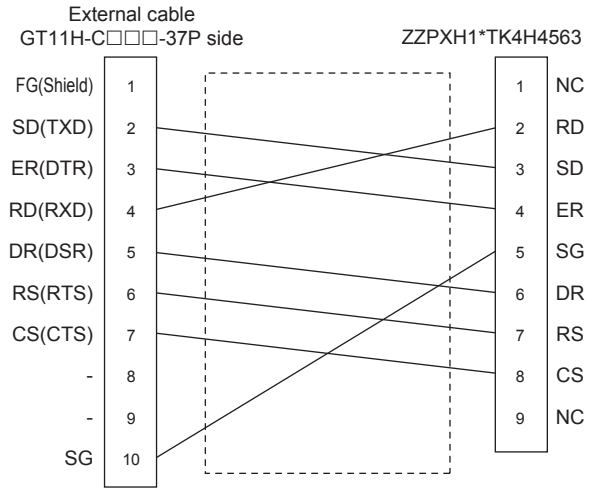

RS232 connection diagram 11)

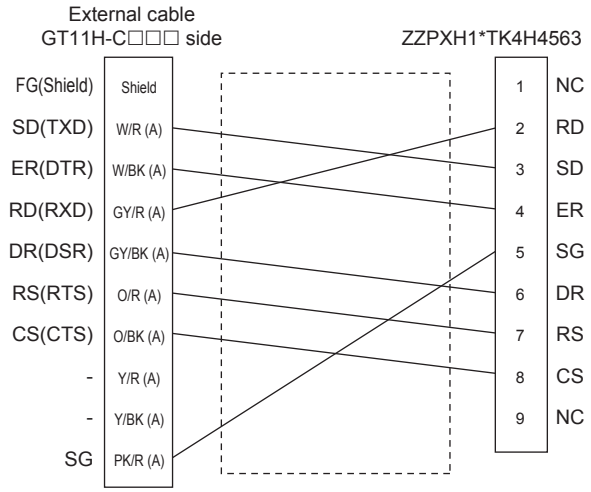

■ Precautions when preparing a cable

(1) Cable length
The length of the RS-232 cable must be 6m or less.

(2) Connector conversion box side connector
For the connector conversion box side connector, refer to the following.

☞ 6.6 Connector Conversion Box

(3) External cable side connector
For the connector specifications of the external cable side, refer to the following.

☞ 8.2 External Cable, Relay Cable

(4) FUJI temperature controller side connector
Use the connector compatible with the FUJI temperature controller side.
For details, refer to the user's manual of the FUJI temperature controller.

48.3.2 RS-485 cable

■ Connection diagram

RS485 connection diagram 1)

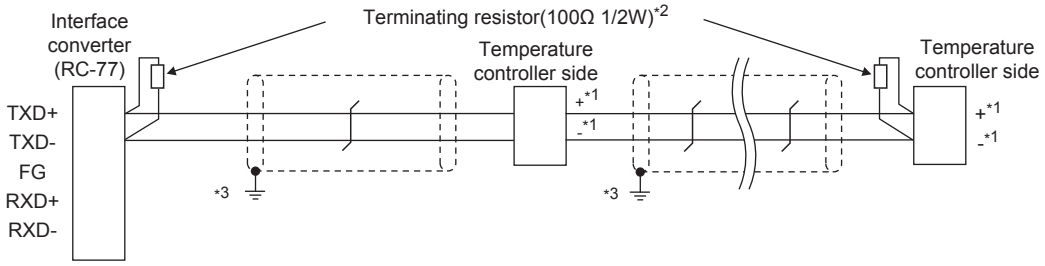

*1 Pin No. of temperature controller differs depending on the model. Refer to the following table.

Signal name	Model of temperature controller					
	PXR3	PXR4	PXR5/9	PXG4	PXG5/9	PXH9
	Pin No.	Pin No.	Pin No.	Pin No.	Pin No.	Pin No.
+	15	7	1	7	1	14
-	14	8	2	8	2	16

*2 Terminating resistor should be provided for a temperature controller which will be a terminal.
Terminating resistor should be provided outside for a interface converter which will be a terminal, with the terminating switch turned OFF.

*3 Connect FG grounding to the appropriate part of a cable shield line.

RS485 connection diagram 2)

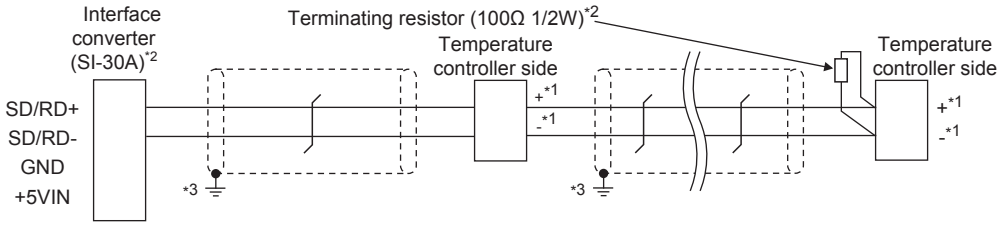

*1 Pin No. of temperature controller differs depending on the model. Refer to the following table.

Signal name	Model of temperature controller					
	PXR3	PXR4	PXR5/9	PXG4	PXG5/9	PXH9
	Pin No.	Pin No.	Pin No.	Pin No.	Pin No.	Pin No.
+	15	7	1	7	1	14
-	14	8	2	8	2	16

*2 Terminating resistor should be provided for a temperature controller which will be a terminal.
Turn ON the terminating switch of an interface converter which will be a terminal.

*3 Connect FG grounding to the appropriate part of a cable shield line.

RS485 connection diagram 3)

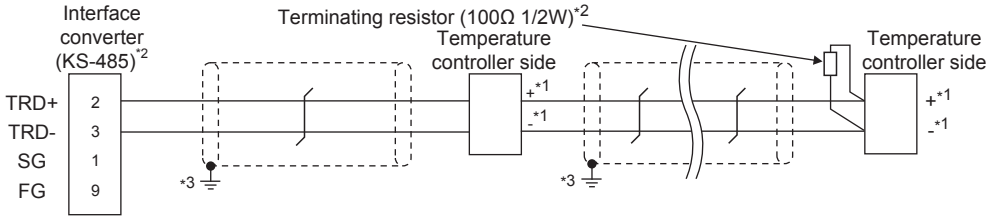

*1 Pin No. of temperature controller differs depending on the model. Refer to the following table.

Signal name	Model of temperature controller					
	PXR3	PXR4	PXR5/9	PXG4	PXG5/9	PXH9
	Pin No.	Pin No.	Pin No.	Pin No.	Pin No.	Pin No.
+	15	7	1	7	1	14
-	14	8	2	8	2	16

*2 Terminating resistor should be provided for a temperature controller which will be a terminal.
Turn ON the terminating switch of an interface converter which will be a terminal.

*3 Connect FG grounding to the appropriate part of a cable shield line.

RS485 connection diagram 4)

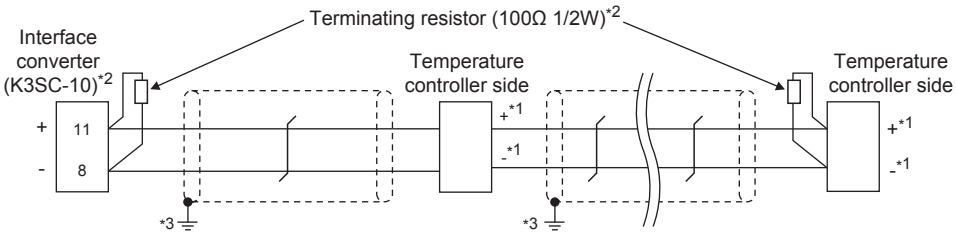

*1 Pin No. of temperature controller differs depending on the model. Refer to the following table.

Signal name	Model of temperature controller					
	PXR3	PXR4	PXR5/9	PXG4	PXG5/9	PXH9
	Pin No.	Pin No.	Pin No.	Pin No.	Pin No.	Pin No.
+	15	7	1	7	1	14
-	14	8	2	8	2	16

*2 Terminating resistor should be provided for a temperature controller and an interface converter which will be terminals.

*3 Connect FG grounding to the appropriate part of a cable shield line.

■ Precautions when preparing a cable

(1) Cable length
The length of the RS-485 cable must be 500m or less.

(2) FUJI temperature controller side connector
Use the connector compatible with the FUJI temperature controller side.
For details, refer to the user's manual of the FUJI temperature controller.

■ Connecting terminating resistors

(1) FUJI temperature controller side
The terminating resistor must be connected to the FUJI temperature controller.

☞ 48.5 Temperature Controller Side Setting

48.4 GOT Side Settings

48.4.1 Setting communication interface (Communication settings)

Set the channel of the connected equipment.

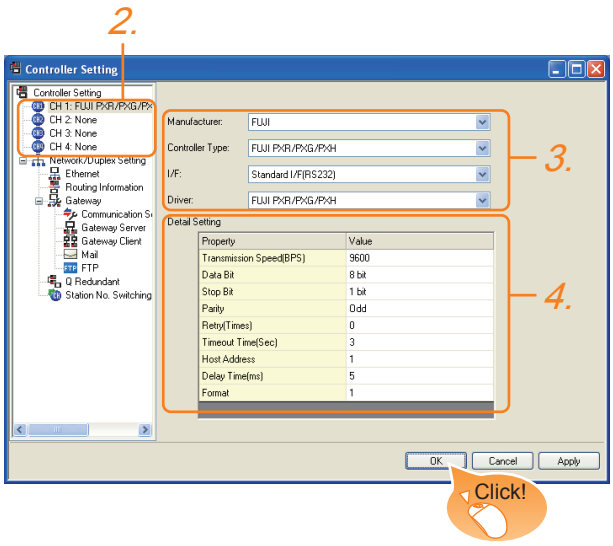

1. Select [Common] → [Controller Setting] from the menu.

2. The Controller Setting window is displayed. Select the channel to be used from the list menu.

3. Set the following items.
   - Manufacturer: FUJI
   - Controller Type: FUJI PXR/PXG/PXH
   - I/F: Interface to be used
   - Driver: FUJI PXR/PXG/PXH

4. The detailed setting is displayed after Manufacturer, Controller Type, I/F, and Driver are set.
   Make the settings according to the usage environment.
   48.4.2 Communication detail settings

Click the [OK] button when settings are completed.

POINT

The settings of connecting equipment can be confirmed in [I/F Communication Setting].
For details, refer to the following.
18.1.2 I/F communication setting

48.4.2 Communication detail settings

Make the settings according to the usage environment.

Item	Description	Range
Transmission Speed	Set this item when change the transmission speed used for communication with the connected equipment. (Default: 9600bps)	9600bps, 19200bps, 38400bps, 57600bps, 115200bps
Data Bit	Set this item when change the data length used for communication with the connected equipment. (Default: 8bit)	7bit/8bit
Stop Bit	Specify the stop bit length for communications. (Default: 1bit)	1bit/2bits
Parity	Specify whether or not to perform a parity check, and how it is performed during communication. (Default: Odd)	None Even Odd
Retry	Set the number of retries to be performed when a communication error occurs. (Default: 0time)	0 to 5times
Timeout Time	Set the time period for a communication to time out. (Default: 3sec)	3 to 30sec
Host Address	Specify the host address (station No. of the GOT to which the temperature controller is connected) in the connected network. (Default: 1)	1 to 255
Delay Time	Set this item to adjust the transmission timing of the communication request from the GOT. (Default: 5ms)	0 to 300ms
Format	Select the communication format. (Default: 1) Format 1: Accessible to PXR/PXG/PXH Format 2: Accessible to PXR/PXG, Not accessible to PXH	1/2

POINT

(1) Host Address
Do not specify a number between 200 and 215.

(2) Format
- When connecting to PXH, specify the format 1.
- When connecting to only PXR/PXG, specifying the format 2 is recommended.

(3) Delay Time
Set the delay time to 5ms or more.

(4) Communication interface setting by Utility
The communication interface setting can be changed on the Utility's [Communication setting] after writing [Communication Settings] of project data.
For details on the Utility, refer to the following manual.
11. COMMUNICATION INTERFACE SETTING (COMMUNICATION SETTING)

(5) Precedence in communication settings
When settings are made by GT Designer3 or the Utility, the latest setting is effective.

48.5 Temperature Controller Side Setting

POINT

(1) FUJI temperature controller
For details of FUJI temperature controller, refer to the following manual.

☞ User's Manual of the FUJI temperature controller

(2) Interface converter
For details on communication settings of the RS232C/RS485 converter, refer to the following manual.

☞ User's manual of interface converter

Model		Refer to
Temperature controller	PXR3, PXR4, PXR5, PXR9	48.5.1
	PXG4, PXG5, PXG9	48.5.2
	PXH9	48.5.3
Interface converter	RC-77	48.5.4
	SI-30A	48.5.5
	KS-485	48.5.6
	K3SC-10	48.5.7

48.5.1 Connecting to PXR3/4/5/9

■ Communication settings

Make the communication settings by operating the key of the temperature controller.

Item	Set value
Transmission speed	9600bps (fixed)
Data bit	8bits (Fixed)
Parity bit*1	Even, Odd, None
Stop bit	1bit (Fixed)
Station No.*2	1 to 255
Communication protocol	MODBUS

*1 Adjust the settings with GOT settings.
*2 Avoid duplication of the station No. with any of the other units.

48.5.2 Connecting to PXG4/5/9

■ Communication settings

Make the communication settings by operating the key of the temperature controller.

(1) RS-485 communication settings

Item	Set value
Transmission speed*1	9600bps, 19200bps
Data bit	8bits (Fixed)
Parity bit*1	Even, Odd, None
Stop bit*1	1bit (Fixed)
Station No.*2	1 to 255
Communication permissions*3	Read only permission or read and overwrite permission

*1 Adjust the settings with GOT settings.
*2 Avoid duplication of the station No. with any of the other units.
*3 Set as necessary.

(2) RS-232 communication settings (PC loader communication)

Item	Set value
Transmission speed	9600bps (fixed)
Data bit	8bits (Fixed)
Parity bit	None (fixed)
Stop bit	1bit (Fixed)

48.5.3 Connecting to PXH9

■ Communication settings

Make the communication settings by operating the key of the temperature controller.

(1) RS-485 communication settings

Item	Set value
Transmission speed*1	9600bps, 19200bps, 38400bps
Data bit	8bits (Fixed)
Parity bit*1	Even, Odd, None
Stop bit	1bit (Fixed)
Station No.*2	1 to 255

*1 Adjust the settings with GOT settings.
*2 Avoid duplication of the station No. with any of the other units.

(2) RS-232 communication settings (PC loader communication)

Item	Set value
Transmission speed*1	9600bps, 19200bps, 38400bps
Data bit	8bits (Fixed)
Parity bit*1	Even, Odd, None
Stop bit	1bit (Fixed)
Station No.	1 (fixed)

*1 Adjust the settings with GOT settings.

48.5.4 Connecting to interface converter (RC-77)

■ Communication settings

Make the communication settings using a setting switch.

Item	Set value
Transmission speed*1	9600bps, 19200bps, 38400bps
MANUAL-AUTO	AUTO
DCE/DTE switching	DCE
RS-422/485 switching	RS-485
Terminating resistor selection	OFF

*1 Adjust with GOT and temperature controller settings.

■ Settings by switch

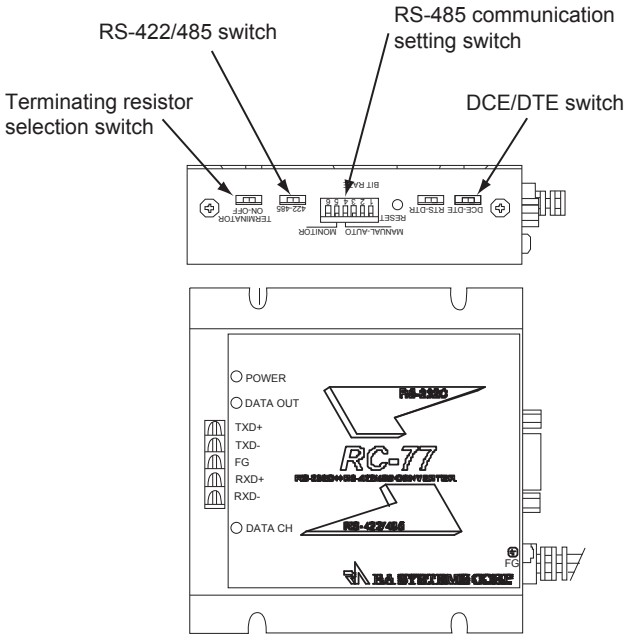

(1) Settings of transmission speed and MANUAL-AUTO

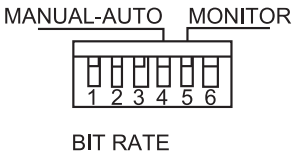

Setting item	Set value	Switch No.			
		1	2	3	4
Transmission speed	9600bps	ON	ON	OFF	
	19200bps	OFF	OFF	ON	
	38400bps	ON	OFF	ON	
MANUAL-AUTO	AUTO				ON

(2) Settings of DCE/DTE, RS-422/485 and terminating resistor selection

Setting item	Set value
DCE/DTE	DCE
RS-422/485	RS-485
Terminating resistor selection	OFF

48.5.5 Connecting to interface converter (SI-30A)

■ Communication settings

Make the communication settings using a setting switch.

Item	Set value
Transmission speed	9600bps
MANUAL-AUTO	AUTO
DCE/DTE switching	DCE
Terminating resistor selection*1	ON/OFF

*1 Set as necessary.

■ Settings by switch

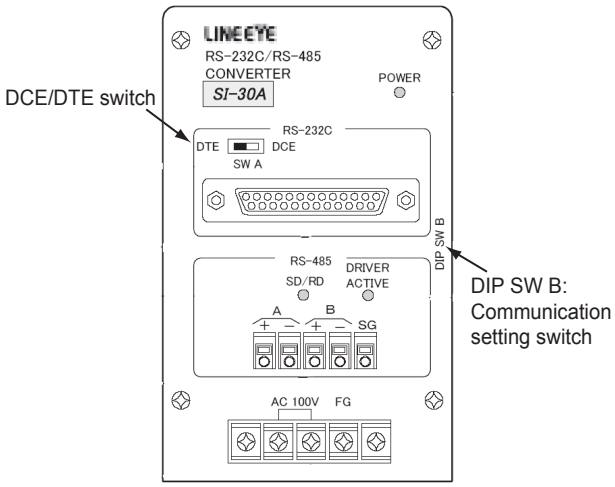

(1) Settings of transmission speed, MANUAL-AUTO and terminating resistor selection

Setting item	Set value	Switch No. of DIP SWB				
		1	2	3	4	5
Transmission speed	9600bps	ON	ON	OFF		
MANUAL-AUTO	AUTO				ON	
Terminating resistor selection*1	Enable					ON
	Disable					OFF

*1 Set as necessary.

(2) Setting of DCE/DTE switching

Setting item	Set value
DCE/DTE	DCE

48.5.6 Connecting to interface converter (KS-485)

■ Communication settings

Make the communication settings using a setting switch.

Item	Set value
Transmission speed	9600bps
Terminating resistor selection*1	ON/OFF

*1 Set as necessary.

■ Settings by switch

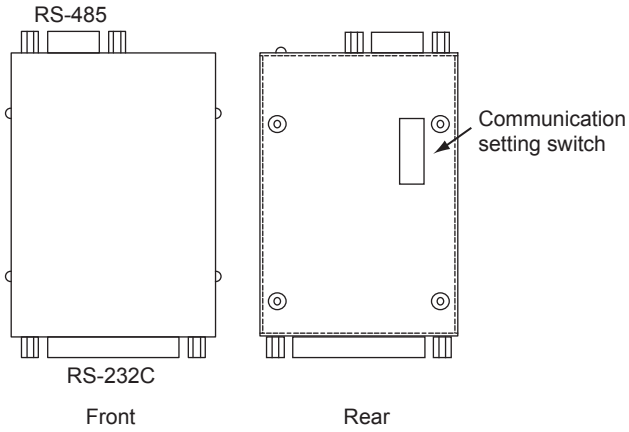

(1) Settings of transmission speed and terminating resistor selection

Setting item	Set value	Switch No.							
		1	2	3	4*2	5	6*2	7	8
Transmission speed	9600bps	ON	OFF	ON	-	ON	-		
Terminating resistor selection*1	Enable							ON	ON
	Disable							OFF	OFF

*1 Set as necessary.
*2 Disabled.

48.5.7 Connecting to interface converter (K3SC-10)

■ Communication settings

Make the communication settings by operating the DIP switch of the temperature controller.

Item	Set value
Transmission speed*1	9600bps, 19200bps, 38400bps
Data bit	8bits
Parity bit*1	Odd, even, none
Stop bit	1bit
Communication type	RS-232C ⟷ RS-485
Echo back	Disable

*1 Adjust with GOT and temperature controller settings.

■ Settings by DIP switch

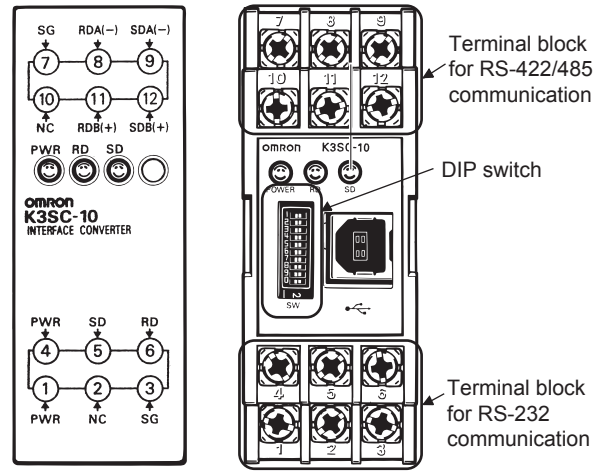

(1) Transmission speed settings

Transmission speed (bps)	Switch No.		
	1	2	3
9600	OFF	OFF	OFF
19200	ON	OFF	ON
38400	OFF	ON	ON

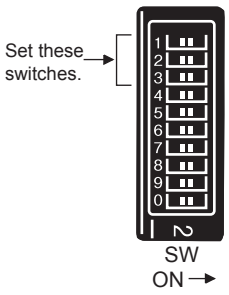

(2) Settings of data length, parity bit, stop bit, master/ slave device and echoback

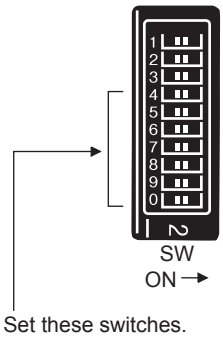

Setting item	Set value	Switch No.						
		4	5	6	7	8	9	0
Stop bit	1bit		ON					
Parity bit	Even			OFF	OFF			
	Odd			ON	OFF			
	Disable			OFF	ON			
Communication type	RS-232C ↔ RS-485					OFF	OFF	
Echo back	Disable							OFF

48.5.8 Station number setting

Set each station number so that no station number overlaps. The station number can be set without regard to the cable connection order. There is no problem even if station numbers are not consecutive.

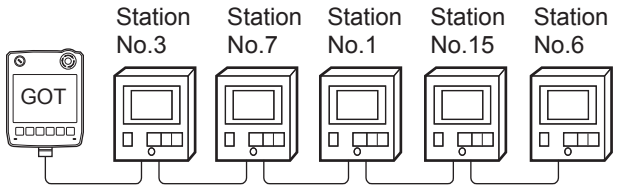

Examples of station number setting

(1) Direct specification

When setting the device, specify the station number of the temperature controller of which data is to be changed.

Specification range
1 to 199
216 to 255

POINT

Specifying a station No. between 200 and 215 (Example of specifying the station No. 215)

1. Set the station No. to "200".
2. Input "215" to the internal device GD10.
3. The station No. 215 is specified. For details, refer to (2) Indirect specification shown below.

(2) Indirect specification

When setting the device, indirectly specify the station number of the inverter of which data is to be changed using the 16-bit GOT internal data register (GD10 to GD25). When specifying the station No. from 200 to 215 on GT Designer3, the value of GD10 to GD25 compatible to the station No. specification will be the station No. of the temperature controller.

Specification station No.	Compatible device	Setting range
200	GD10	1 to 255 For the setting other than the above, an error (dedicated device is out of range) will occur.
201	GD11	
202	GD12	
203	GD13	
204	GD14	
205	GD15	
206	GD16	
207	GD17	
208	GD18	
209	GD19	
210	GD20	
211	GD21	
212	GD22	
213	GD23	
214	GD24	
215	GD25	

48.6 Device Range that Can Be Set

For details on the device range of controllers that can be used on GT14 Handy, refer to the following manuals.

☞ GT Designer3 Version1 Screen Design Manual (Fundamentals)

☞ GOT1000 Series Connection Manual (Non-Mitsubishi Products 2) for GT Works3

48.7 Precautions

■ Station number settings of temperature controller

In the system configuration, the temperature controller with the station number set with the host address must be included. For details of host address setting, refer to the following.

☞48.4.2 Communication detail settings

■ FIX processing of temperature controller

The temperature controller power must not be turned off during the FIX processing. Otherwise, data within the non-volatile memory will corrupt and the temperature controller will be unavailable.

■ GOT clock control

Since the temperature controller does not have a clock function, the settings of "time adjusting" or "time broad cast" by GOT clock function will be disabled.

■ Cutting the portion of multiple connection of the controller

By setting GOT internal device, GOT can cut the portion of multiple connection of the controller. For example, faulty station that has communication timeout can be cut from the system.

For details of the setting contents of GOT internal device, refer to the following manual.

☞ GT Designer3 Version1 Screen Design Manual

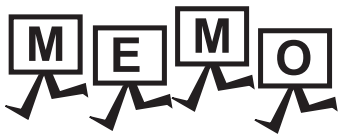
MEMO

49. CONNECTION TO YASKAWA PLC

49.1 Connectable Model List

The following table shows the connectable models.

Model	Clock	Communication	GT14 Handy	Refer to
GL120	○	RS-232 RS-422	○	49.2.1
GL130				
GL60S	×	RS-232 RS-422	○	49.2.2
GL60H				
GL70H				
MP920	×	RS-232 RS-422	○	49.2.3
MP930				
CP-9300MS				
CP-9200(H)				
PROGIC-8				
MP940	×	RS-232 RS-422	○	49.2.4
CP-9200SH	×	RS-232	○	49.2.5
CP-317				
MP2200	×	RS-232 RS-422	○	49.2.6
MP2300				
MP2300S				
MP920	×	Ethernet	○	49.3.1
MP2200				
MP2300				
MP2300S				
CP-9200SH				
CP-312				
CP-317				

49.2 Serial Connection

49.2.1 System configuration for connecting to GL120 or GL130

Communication driver

YASKAWA GL/CP9200(SH/H)/CP9300MS

(1) When using the connector conversion box

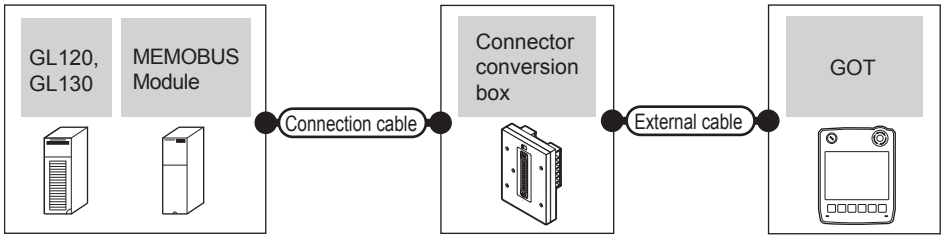

PLC			Connection cable	Connector conversion box	External cable	GOT model	Total distance	Number of connectable equipment
Model	MEMOBUS module*1	Communication type	Cable model Connection diagram number					
GL120 GL130	-	RS-232	GT09-C30R20201-9P(3m) or User preparing RS232 connection diagram 1)	GT11H-CNB-37S	GT11H-C30-37P(3m)	GT14 Handy	6m	1 GOT for 1 PLC
	JAMSC-120NOM27100	RS-422	GT09-C30R40201-9P(3m) GT09-C100R40201-9P(10m) or User preparing RS422 connection diagram 1)	GT11H-CNB-37S	GT11H-C30-37P(3m) GT11H-C60-37P(6m) GT11H-C100-37P(10m)	GT14 Handy	13m	1 GOT for 1 MEMOBUS module

*1 Product manufactured by YASKAWA Electric Corporation. For details of the product, contact YASKAWA Electric Corporation.

(2) When using the external cable (GT11H-C□□□-37P)

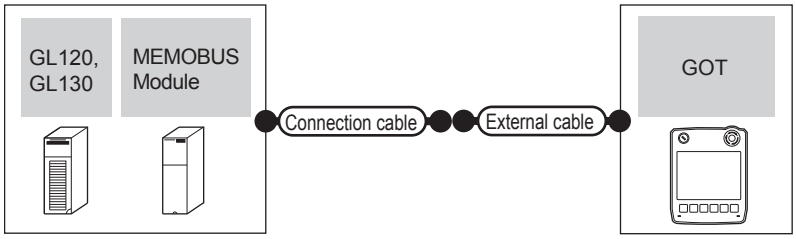

PLC			Connection cable	External cable	GOT model	Total distance	Number of connectable equipment
Model	MEMOBUS module*1	Communication type	Cable model Connection diagram number				
GL120 GL130	-	RS-232	User preparing RS232 connection diagram 2)	GT11H-C30-37P(3m)	GT14 Handy	6m	1 GOT for 1 PLC
	JAMSC-120NOM27100	RS-422	User preparing RS422 connection diagram 2)	GT11H-C30-37P(3m) GT11H-C60-37P(6m) GT11H-C100-37P(10m)	GT14 Handy	13m	1 GOT for 1 MEMOBUS module

*1 Product manufactured by YASKAWA Electric Corporation. For details of the product, contact YASKAWA Electric Corporation.

(3) When using the external cable (GT11H-C□□□)

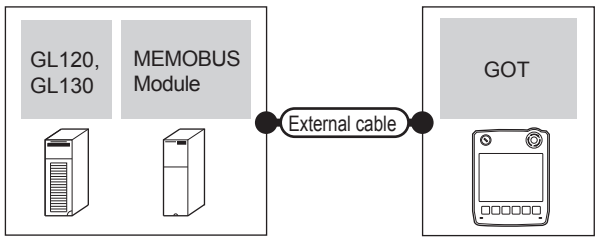

PLC			External cable	GOT model	Total distance	Number of connectable equipment
Model	MEMOBUS module*1	Communication type				
GL120 GL130	-	RS-232	GT11H-C30(3m) GT11H-C60(6m) User preparing RS232 connection diagram 3)	GT14 Handy	6m	1 GOT for 1 PLC
	JAMSC-120NOM27100	RS-422	GT11H-C30(3m) GT11H-C60(6m) GT11H-C100(10m) User preparing RS422 connection diagram 3)	GT14 Handy	13m	1 GOT for 1 MEMOBUS module

*1 Product manufactured by YASKAWA Electric Corporation. For details of the product, contact YASKAWA Electric Corporation.

49.2.2 System configuration for connecting to GL60S, GL60H or GL70H

Communication driver
YASKAWA GL/CP9200(SH/H)/CP9300MS

(1) When using the connector conversion box

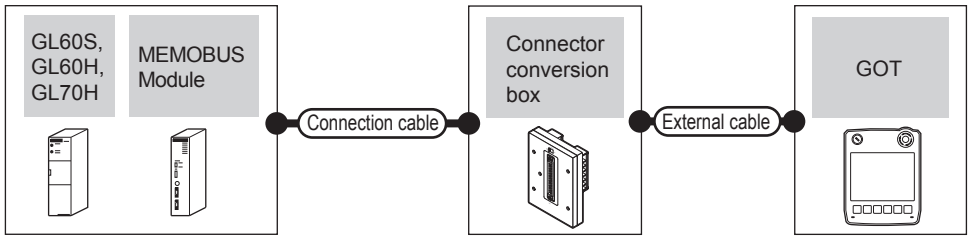

PLC			Connection cable	Connector conversion box	External cable	GOT model	Total distance	Number of connectable equipment
Model	MEMOBUS module*1	Communication type	Cable model Connection diagram number					
GL60S GL60H GL70H	JAMSC-IF60 JAMSC-IF61	RS-232	GT09-C30R20201-9P(3m) or User preparing RS232 connection diagram 1)	GT11H-CNB-37S	GT11H-C30-37P(3m)	GT14 Handy	6m	1 GOT for 1 MEMOBUS module
	JAMSC-IF612	RS-422	GT09-C30R40201-9P(3m) GT09-C100R40201-9P(10m) or User preparing RS422 connection diagram 1)	GT11H-CNB-37S	GT11H-C30-37P(3m) GT11H-C60-37P(6m) GT11H-C100-37P(10m)	GT14 Handy	13m	

*1 Product manufactured by YASKAWA Electric Corporation. For details of the product, contact YASKAWA Electric Corporation.

(2) When using the external cable (GT11H-C□□□-37P)

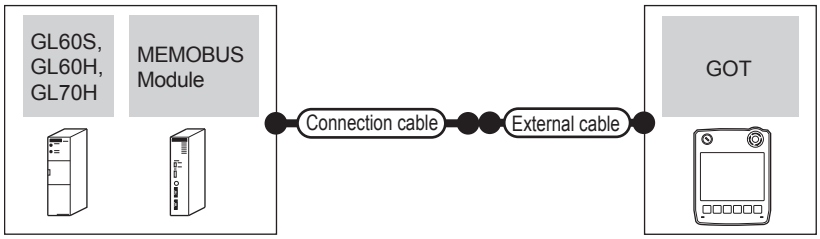

PLC			Connection cable	External cable	GOT model	Total distance	Number of connectable equipment
Model	MEMOBUS module*1	Communication type	Cable model Connection diagram number				
GL60S GL60H GL70H	JAMSC-IF60 JAMSC-IF61	RS-232	User preparing RS232 connection diagram 2)	GT11H-C30-37P(3m)	GT14 Handy	6m	1 GOT for 1 MEMOBUS module
	JAMSC-IF612	RS-422	User preparing RS422 connection diagram 2)	GT11H-C30-37P(3m) GT11H-C60-37P(6m) GT11H-C100-37P(10m)	GT14 Handy	13m	

*1 Product manufactured by YASKAWA Electric Corporation. For details of the product, contact YASKAWA Electric Corporation.

(3) When using the external cable (GT11H-C□□□)

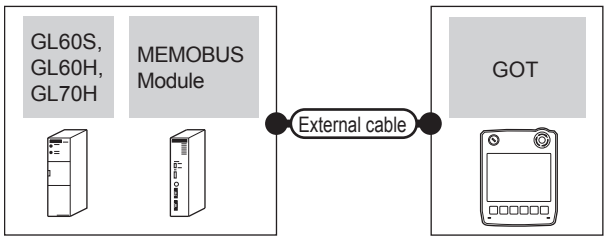

PLC			External cable	GOT model	Total distance	Number of connectable equipment
Model	MEMOBUS module*1	Communication type				
GL60S GL60H GL70H	JAMSC-IF60 JAMSC-IF61	RS-232	GT11H-C30(3m) GT11H-C60(6m) User preparing RS232 connection diagram 3)	GT14 Handy	6m	1 GOT for 1 MEMOBUS module
	JAMSC-IF612	RS-422	GT11H-C30(3m) GT11H-C60(6m) GT11H-C100(10m) User preparing RS422 connection diagram 3)	GT14 Handy	13m	

*1 Product manufactured by YASKAWA Electric Corporation. For details of the product, contact YASKAWA Electric Corporation.

49.2.3 System configuration for connecting to MP-920/930, CP-9300MS/9200(H) or PROGIC-8

Communication driver
YASKAWA GL/CP9200(SH/H)/CP9300MS

(1) When using the connector conversion box

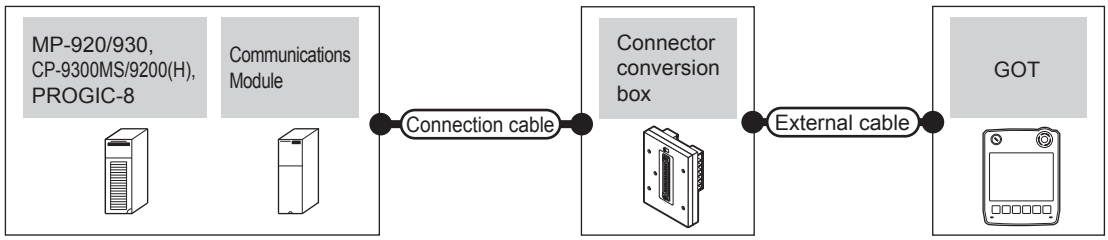

PLC			Connection cable	Connector conversion box	External cable	GOT model	Total distance	Number of connectable equipment
Model	Communication module*1	Communication type	Cable model Connection diagram number					
MP-920 MP-930	-	RS-232	GT09-C30R20201-9P(3m) or User preparing RS232 connection diagram 1)	GT11H-CNB-37S	GT11H-C30-37P(3m)	GT14 Handy	6m	1 GOT for 1 PLC
CP-9200(H) PROGIC-8 (Connecting to port 1)								
PROGIC-8 (Connecting to port 2)	-	RS-232	GT09-C30R20202-15P(3m) or User preparing RS232 connection diagram 4)	GT11H-CNB-37S	GT11H-C30-37P(3m)	GT14 Handy	6m	
CP-9300MS (CP-9300MC compatible/non-compatible)	-	RS-232	GT09-C30R20203-9P(3m) or User preparing RS232 connection diagram 7)	GT11H-CNB-37S	GT11H-C30-37P(3m)	GT14 Handy	6m	
MP-920 (connecting to 217IF)	217IF	RS-232	GT09-C30R20201-9P(3m) or User preparing RS232 connection diagram 1)	GT11H-CNB-37S	GT11H-C30-37P(3m)	GT14 Handy	6m	1 GOT for 1 communication module
		RS-422	User preparing RS422 connection diagram 4)	GT11H-CNB-37S	GT11H-C30-37P(3m) GT11H-C60-37P(6m) GT11H-C100-37P(10m)	GT14 Handy	13m	

*1 Product manufactured by YASKAWA Electric Corporation. For details of the product, contact YASKAWA Electric Corporation.

(2) When using the external cable (GT11H-C□□□-37P)

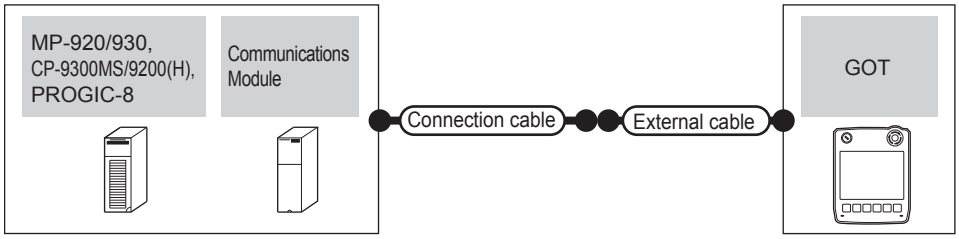

PLC			Connection cable	External cable	GOT model	Total distance	Number of connectable equipment
Model	Communication module*1	Communication type	Cable model Connection diagram number				
MP-920 MP-930 CP-9200(H) PROGIC-8 (Connecting to port 1)	-	RS-232	User preparing RS232 connection diagram 2)	GT11H-C30-37P(3m)	GT14 Handy	6m	1 GOT for 1 PLC
PROGIC-8 (Connecting to port 2)	-	RS-232	User preparing RS232 connection diagram 5)	GT11H-C30-37P(3m)	GT14 Handy	6m	
CP-9300MS (CP-9300MC compatible/non-compatible)	-	RS-232	User preparing RS232 connection diagram 8)	GT11H-C30-37P(3m)	GT14 Handy	6m	
MP-920 (connecting to 217IF)	217IF	RS-232	User preparing RS232 connection diagram 2)	GT11H-C30-37P(3m)	GT14 Handy	6m	1 GOT for 1 communication module
		RS-422	User preparing RS422 connection diagram 5)	GT11H-C30-37P(3m) GT11H-C60-37P(6m) GT11H-C100-37P(10m)	GT14 Handy	13m	

*1 Product manufactured by YASKAWA Electric Corporation. For details of the product, contact YASKAWA Electric Corporation.

(3) When using the external cable (GT11H-C□□□)

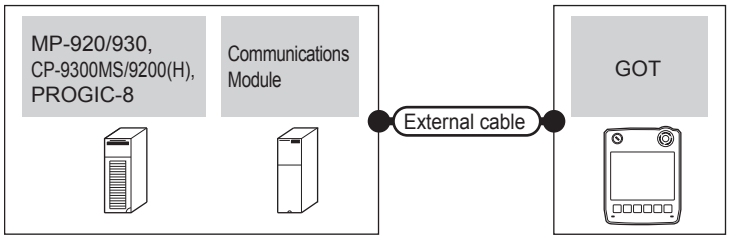

PLC			External cable	GOT model	Total distance	Number of connectable equipment
Model	Communication module*1	Communication type				
MP-920 MP-930 CP-9200(H) PROGIC-8 (Connecting to port 1)	-	RS-232	GT11H-C30(3m) GT11H-C60(6m) User preparing RS232 connection diagram 3)	GT14 Handy	6m	1 GOT for 1 PLC
PROGIC-8 (Connecting to port 2)	-	RS-232	GT11H-C30(3m) GT11H-C60(6m) User preparing RS232 connection diagram 6)	GT14 Handy	6m	
CP-9300MS (CP-9300MC compatible/ non-compatible)	-	RS-232	GT11H-C30(3m) GT11H-C60(6m) User preparing RS232 connection diagram 9)	GT14 Handy	6m	
MP-920 (connecting to 217IF)	217IF	RS-232	GT11H-C30(3m) GT11H-C60(6m) User preparing RS232 connection diagram 3)	GT14 Handy	6m	1 GOT for 1 communication module
		RS-422	GT11H-C30(3m) GT11H-C60(6m) GT11H-C100(10m) User preparing RS422 connection diagram 6)	GT14 Handy	13m	

*1 Product manufactured by YASKAWA Electric Corporation. For details of the product, contact YASKAWA Electric Corporation.

49.2.4 System configuration for connecting to MP-940

Communication driver

YASKAWA GL/CP9200(SH/H)/CP9300MS

(1) When using the connector conversion box

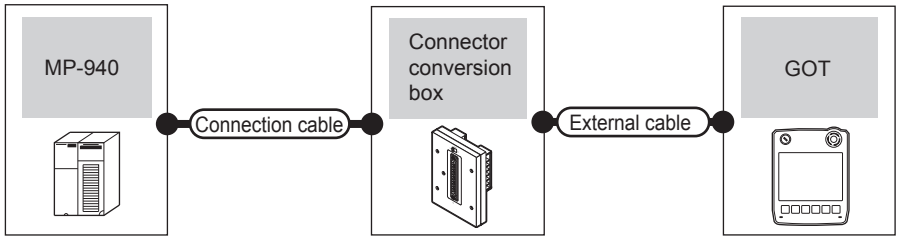

PLC		Connection cable	Connector conversion box	External cable	GOT model	Total distance	Number of connectable equipment
Model	Communication type	Cable model Connection diagram number					
MP-940	RS-232	GT09-C30R20204-14P(3m) or User preparing RS232 connection diagram 10)	GT11H-CNB-37S	GT11H-C30-37P(3m)	GT14 Handy	6m	1 GOT for 1 PLC
	RS-422	GT09-C30R40202-14P(3m) GT09-C100R40202-14P(10m) or User preparing RS422 connection diagram 7)	GT11H-CNB-37S	GT11H-C30-37P(3m) GT11H-C60-37P(6m) GT11H-C100-37P(10m)	GT14 Handy	13m	

(2) When using the external cable (GT11H-C□□□-37P)

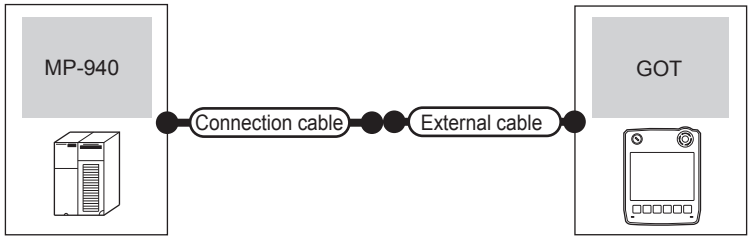

PLC		Connection cable	External cable	GOT model	Total distance	Number of connectable equipment
Model	Communication type	Cable model Connection diagram number				
MP-940	RS-232	User preparing RS232 connection diagram 11)	GT11H-C30-37P(3m)	GT14 Handy	6m	1 GOT for 1 PLC
	RS-422	User preparing RS422 connection diagram 8)	GT11H-C30-37P(3m) GT11H-C60-37P(6m) GT11H-C100-37P(10m)	GT14 Handy	13m	

(3) When using the external cable (GT11H-C□□□)

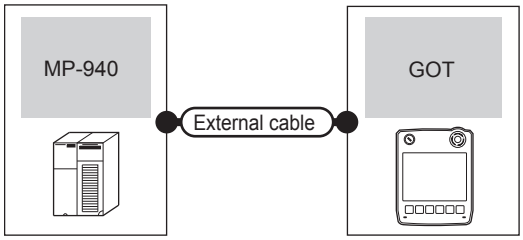

PLC		External cable	GOT model	Total distance	Number of connectable equipment
Model	Communication type				
MP-940	RS-232	GT11H-C30(3m) GT11H-C60(6m) (User preparing) RS232 connection diagram 12)	GT14 Handy	6m	1 GOT for 1 PLC
	RS-422	GT11H-C30(3m) GT11H-C60(6m) GT11H-C100(10m) (User preparing) RS422 connection diagram 9)	GT14 Handy	13m	

49.2.5 System configuration for connecting to CP-9200SH or CP-317

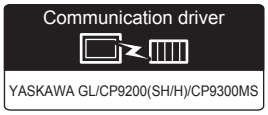

(1) When using the connector conversion box

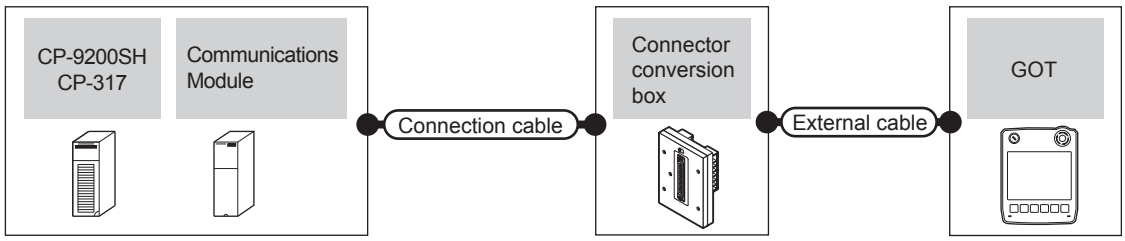

PLC			Connection cable	Connector conversion box	External cable	GOT model	Total distance	Number of connectable equipment
Model	Communication module*1	Communication type	Cable model Connection diagram number					
CP-9200SH CP-317	CP-217IF (CN1 connection)	RS-232	GT09-C30R20203-9P(3m) or User preparing RS232 connection diagram 16)	GT11H-CNB-37S	GT11H-C30-37P(3m)	GT14 Handy	6m	1 GOT for 1 communication module
	CP-217IF (CN2 connection)	RS-232	GT09-C30R20205-25P(3m) or User preparing RS232 connection diagram 13)			GT14 Handy	6m	

*1 Product manufactured by YASKAWA Electric Corporation. For details of the product, contact YASKAWA Electric Corporation.

(2) When using the external cable (GT11H-C□□□-37P)

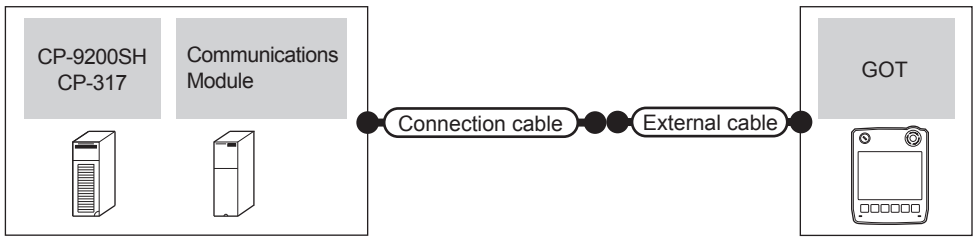

PLC			Connection cable	External cable	GOT model	Total distance	Number of connectable equipment
Model	Communication module*1	Communication type	Cable model Connection diagram number				
CP-9200SH CP-317	CP-217IF (CN1 connection)	RS-232	User preparing RS232 connection diagram 2)	GT11H-C30-37P(3m)	GT14 Handy	6m	1 GOT for 1 communication module
	CP-217IF (CN2 connection)	RS-232	User preparing RS232 connection diagram 14)	GT11H-C30-37P(3m)	GT14 Handy	6m	

*1 Product manufactured by YASKAWA Electric Corporation. For details of the product, contact YASKAWA Electric Corporation.

(3) When using the external cable (GT11H-C□□□)

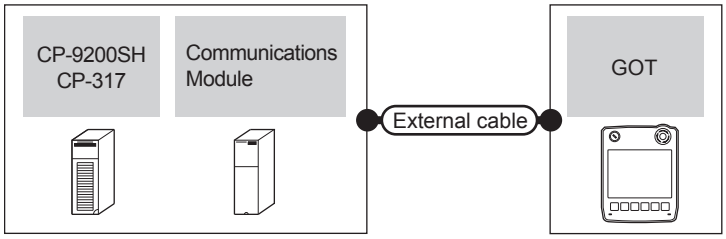

PLC			External cable	GOT model	Total distance	Number of connectable equipment
Model	Communication module*1	Communication type				
CP-9200SH CP-317	CP-217IF (CN1 connection)	RS-232	GT11H-C30(3m) GT11H-C60(6m) User preparing RS232 connection diagram 3)	GT14 Handy	6m	1 GOT for 1 communication module
	CP-217IF (CN2 connection)	RS-232	GT11H-C30(3m) GT11H-C60(6m) User preparing RS232 connection diagram 15)	GT14 Handy	6m	

*1 Product manufactured by YASKAWA Electric Corporation. For details of the product, contact YASKAWA Electric Corporation.

49.2.6 System configuration for connecting to MP2200, MP2300 or MP2300S

Communication driver

YASKAWA GL/CP9200(SH/H)/CP9300MS

(1) When using the connector conversion box

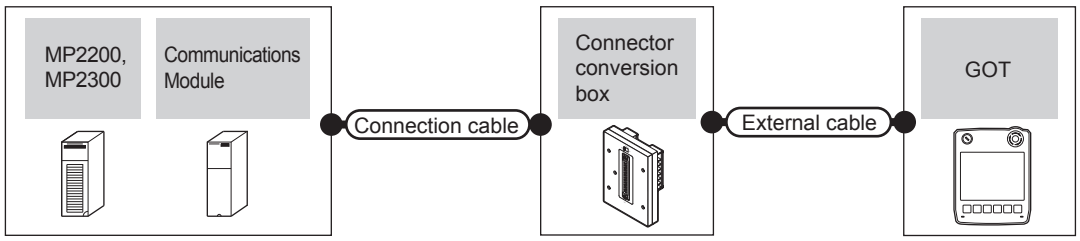

PLC			Connection cable	Connector conversion box	External cable	GOT model	Total distance	Number of connectable equipment
Model	Communication module*1	Communication type	Cable model Connection diagram number					
MP2200 MP2300 MP2300S	217IF-01 218IF-01 218IF-02*2	RS-232	GT09-C30R20201-9P(3m) or User preparing RS232 connection diagram 1)	GT11H-CNB-37S	GT11H-C30-37P(3m)	GT14 Handy	6m	1 GOT for 1 communication module
	217IF-01	RS-422	User preparing RS422 connection diagram 10)	GT11H-CNB-37S	GT11H-C30-37P(3m) GT11H-C60-37P(6m) GT11H-C100-37P(10m)	GT14 Handy	13m	

*1 Product manufactured by YASKAWA Electric Corporation. For details of the product, contact YASKAWA Electric Corporation.
*2 Though the maximum transmission speed of the 218IF-02 is 115200bps, the maximum transmission speed selectable in the GOT is 57600bps.

(2) When using the external cable (GT11H-C□□□-37P)

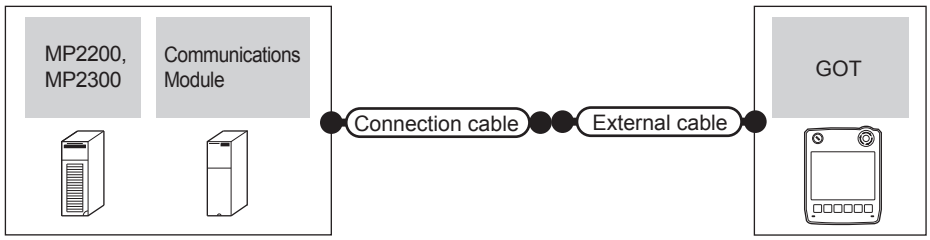

PLC			Connection cable	External cable	GOT model	Total distance	Number of connectable equipment
Model	Communication module*1	Communication type	Cable model Connection diagram number				
MP2200 MP2300 MP2300S	217IF-01 218IF-01 218IF-02*2	RS-232	User preparing RS232 connection diagram 2)	GT11H-C30-37P(3m)	GT14 Handy	6m	1 GOT for 1 communication module
	217IF-01	RS-422	User preparing RS422 connection diagram 11)	GT11H-C30-37P(3m) GT11H-C60-37P(6m) GT11H-C100-37P(10m)	GT14 Handy	13m	

*1 Product manufactured by YASKAWA Electric Corporation. For details of the product, contact YASKAWA Electric Corporation.
*2 Though the maximum transmission speed of the 218IF-02 is 115200bps, the maximum transmission speed selectable in the GOT is 57600bps.

(3) When using the external cable (GT11H-C□□□)

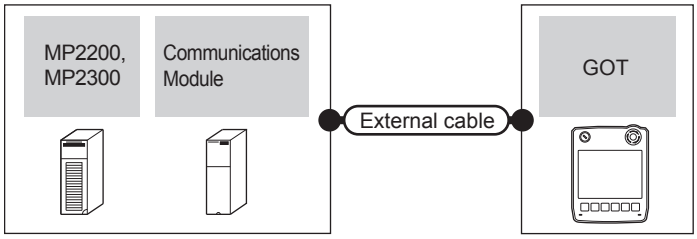

PLC			External cable	GOT model	Total distance	Number of connectable equipment
Model	Communication module*1	Communication type				
MP2200 MP2300 MP2300S	217IF-01 218IF-01 218IF-02*2	RS-232	GT11H-C30(3m) GT11H-C60(6m) User preparing RS232 connection diagram 3)	GT14 Handy	6m	1 GOT for 1 communication module
	217IF-01	RS-422	GT11H-C30(3m) GT11H-C60(6m) GT11H-C10010m) User preparing RS422 connection diagram 12)	GT14 Handy	13m	

*1 Product manufactured by YASKAWA Electric Corporation. For details of the product, contact YASKAWA Electric Corporation.

*2 Though the maximum transmission speed of the 218IF-02 is 115200bps, the maximum transmission speed selectable in the GOT is 57600bps.

49.2.7 Connection diagram

The following diagram shows the connection between the GOT and the PLC.

■ RS-232 cable

(1) Connection diagram

RS232 connection diagram 1)

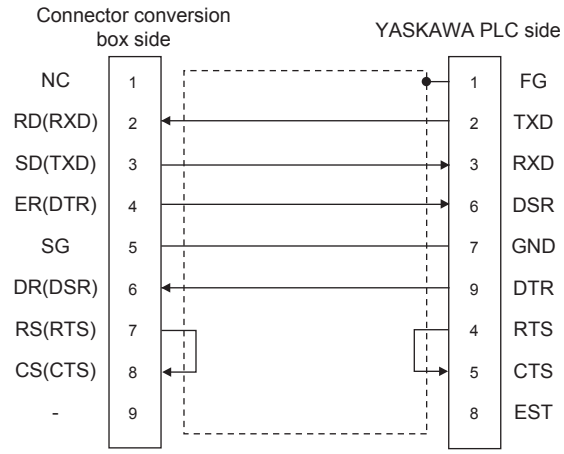

RS232 connection diagram 2)

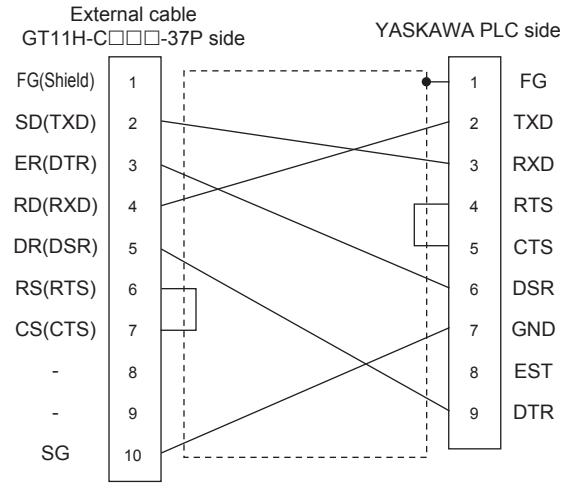

RS232 connection diagram 3)

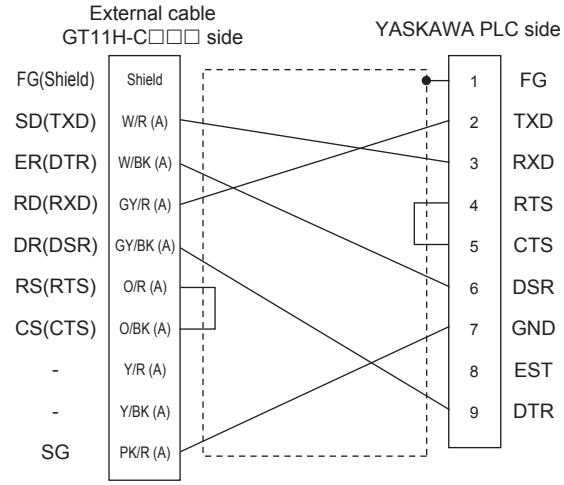

RS232 connection diagram 4)

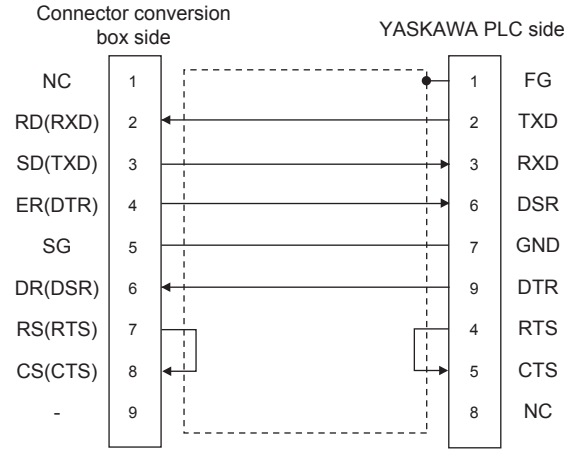

RS232 connection diagram 5)

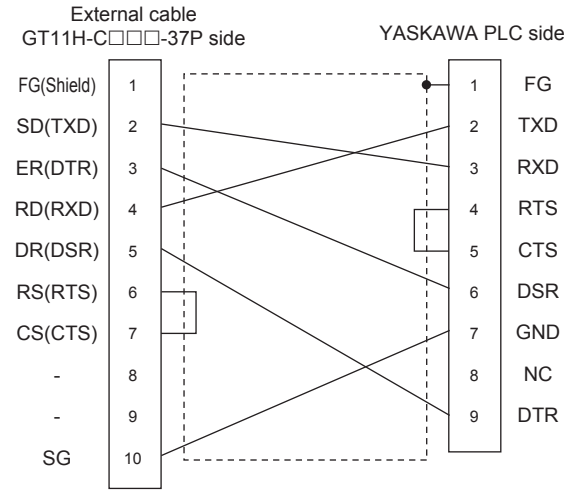

RS232 connection diagram 6)

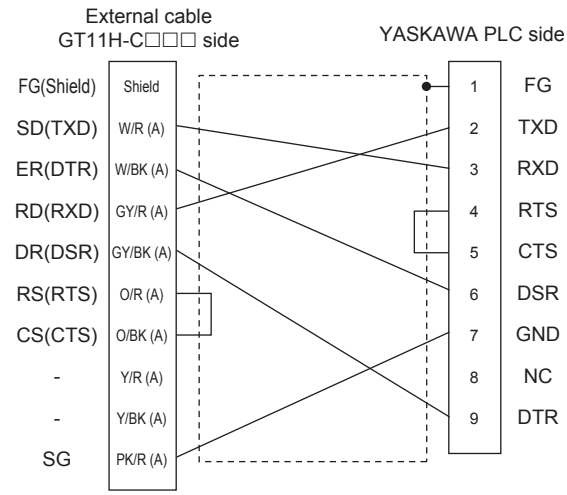

RS232 connection diagram 7)

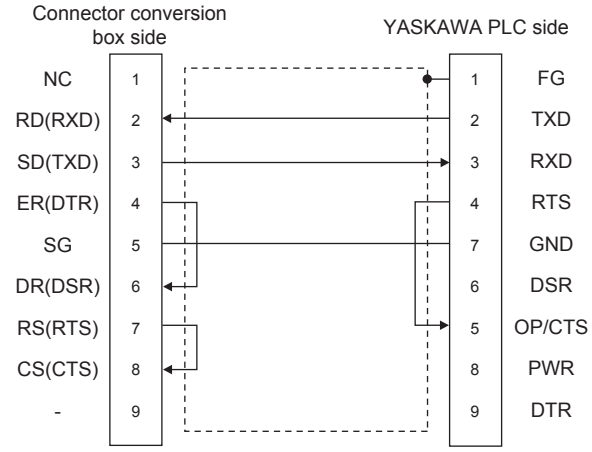

RS232 connection diagram 8)

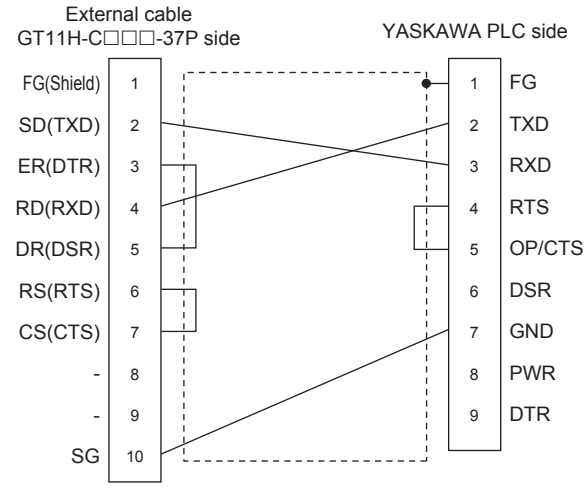

RS232 connection diagram 9)

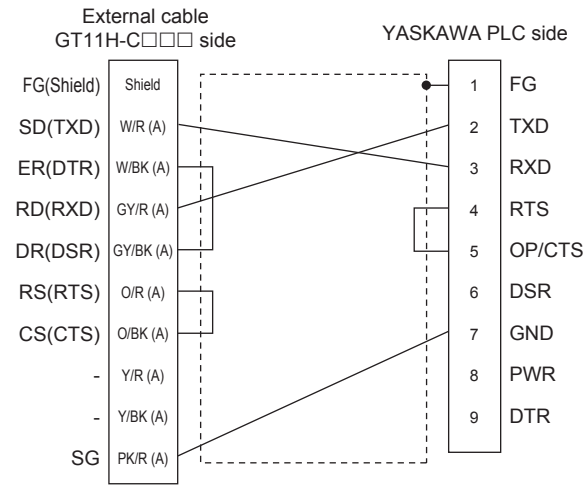

RS232 connection diagram 10)

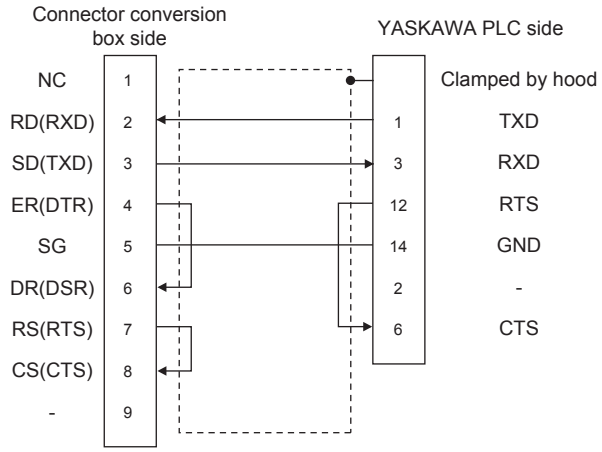

RS232 connection diagram 11)

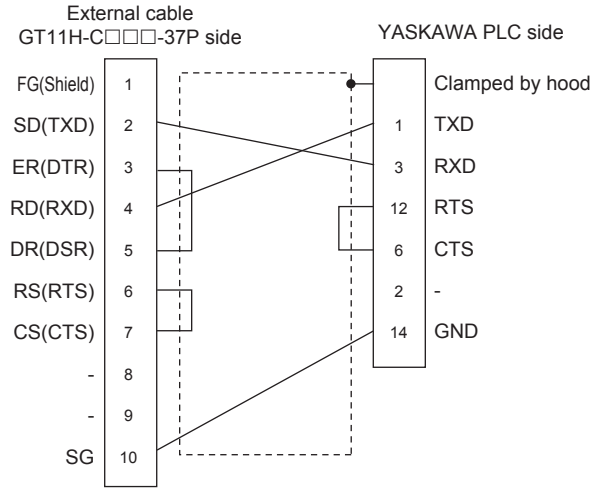

RS232 connection diagram 12)

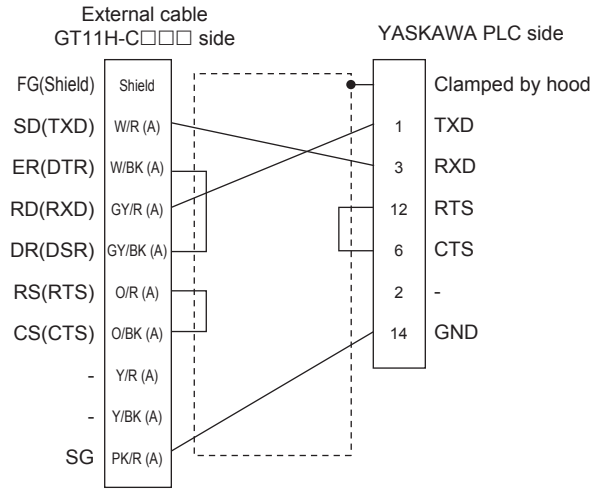

RS232 connection diagram 13)

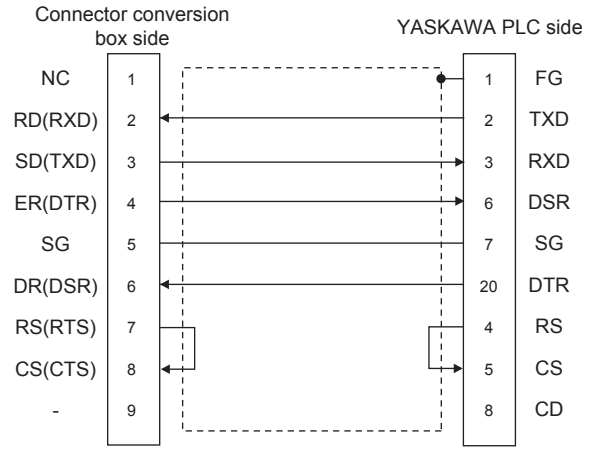

RS232 connection diagram 14)

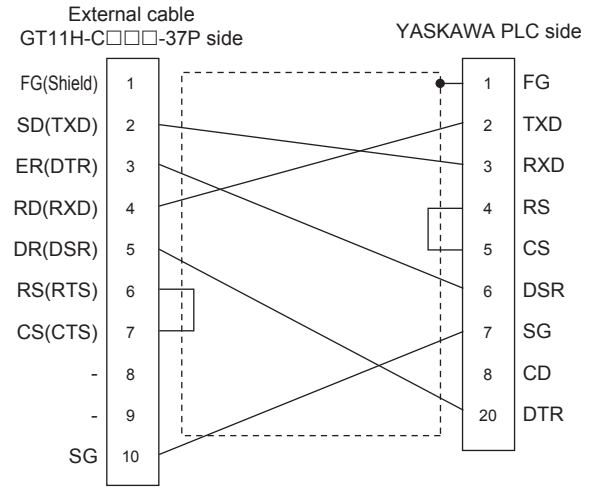

RS232 connection diagram 15)

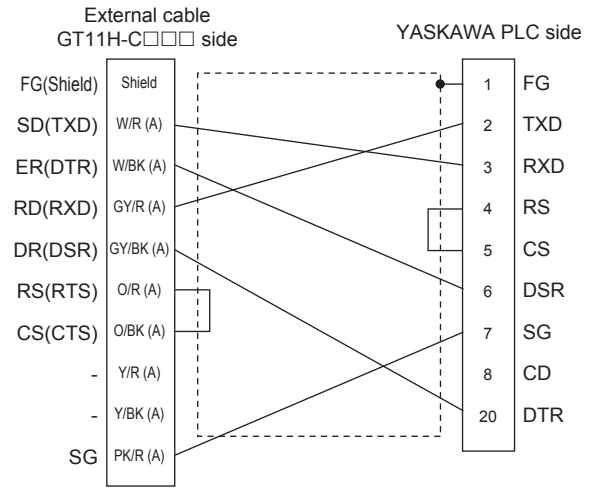

RS232 connection diagram 16)

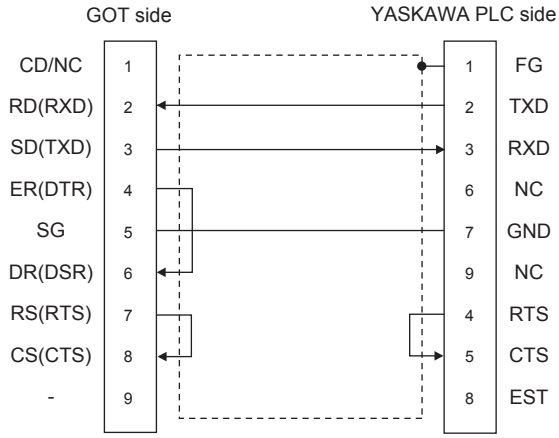

RS232 connection diagram 17)

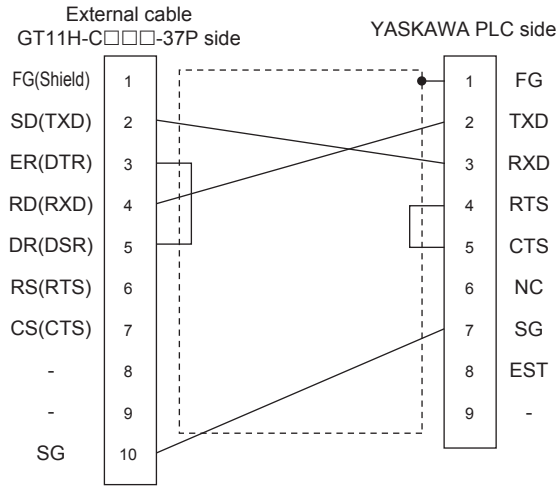

RS232 connection diagram 18)

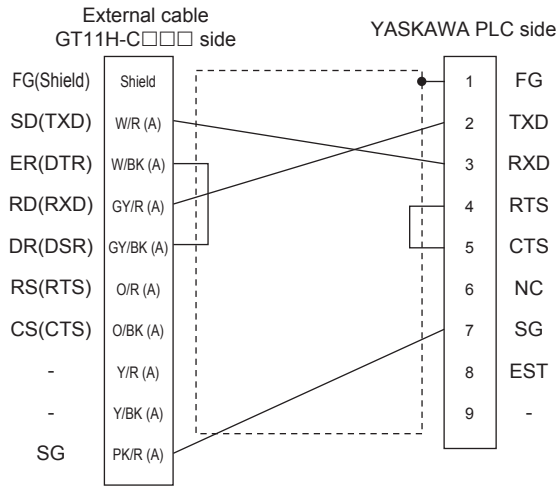

(2) Precautions when preparing a cable

(a) Cable length
The total distance (between the GOT and a controller) of RS-232 cable must be 6m or less.

(b) Connector conversion box side connector
For the connector conversion box side connector, refer to the following.

☞ 6.6 Connector Conversion Box

(c) External cable side connector
For the connector specifications of the external cable side, refer to the following.

☞ 8.2 External Cable, Relay Cable

(d) YASKAWA PLC side connector
Use the connector compatible with the YASKAWA PLC side module.
For details, refer to the user's manuals for YASKAWA PLC.

■ RS-422 cable

(1) Connection diagram

RS422 connection diagram 1)

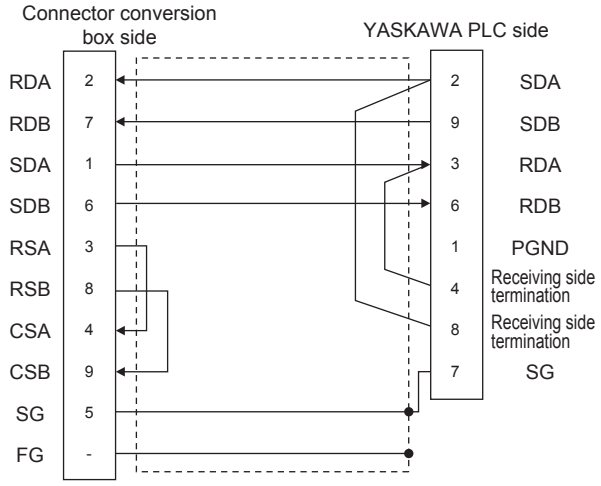

RS422 connection diagram 2)

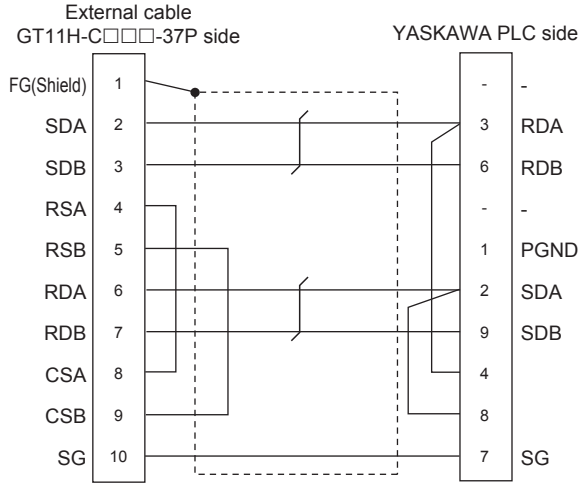

RS422 connection diagram 3)

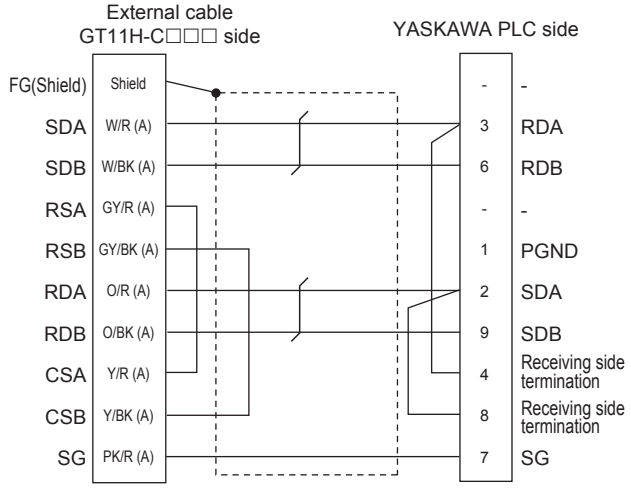

RS422 connection diagram 4)

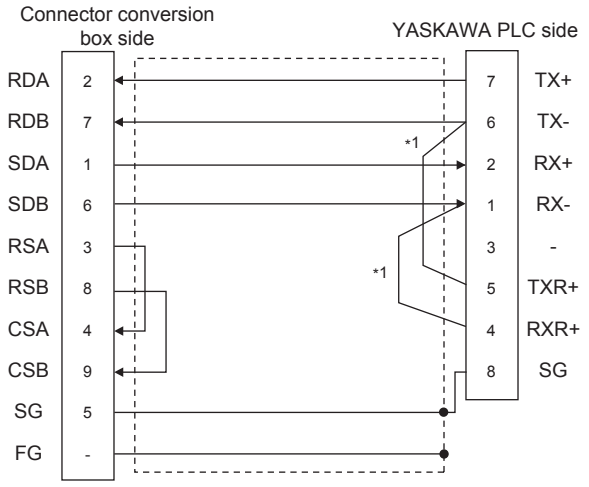

*1 The terminating resistor (120Ω) is valid by connecting pin 1 with pin 4 and pin 5 with pin 6 of the YASKAWA PLC side.

RS422 connection diagram 5)

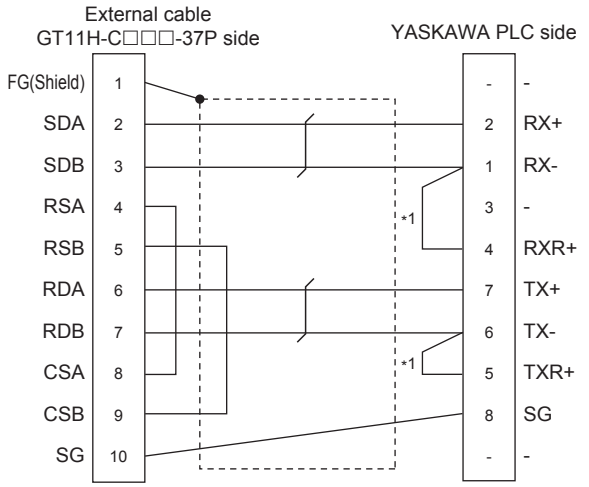

RS422 connection diagram 6)

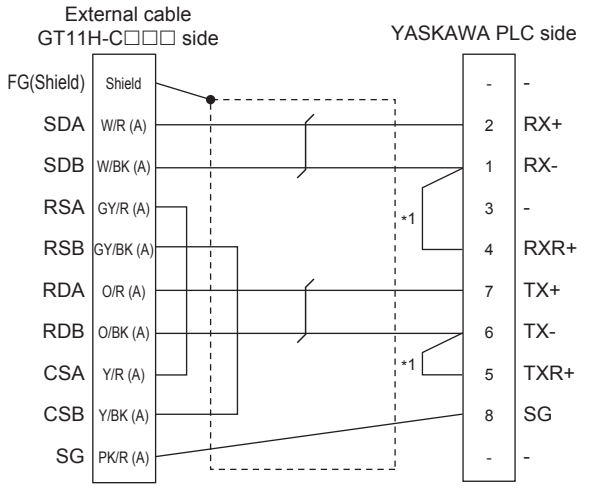

RS422 connection diagram 7)

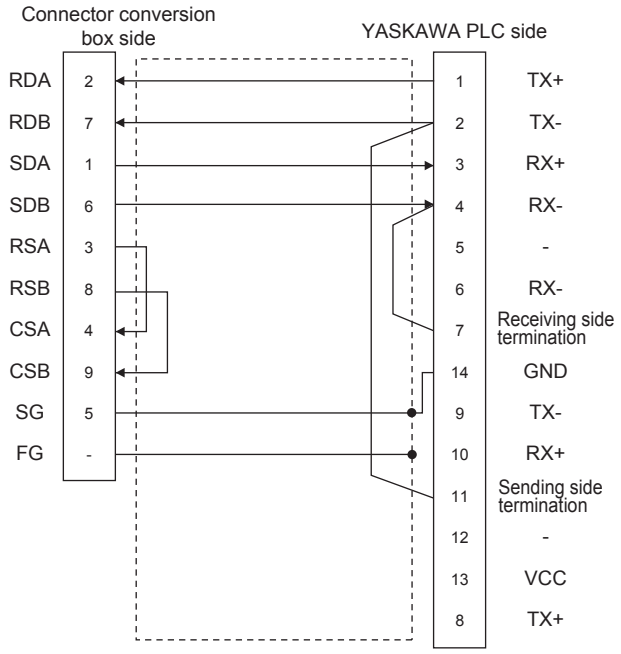

RS422 connection diagram 8)

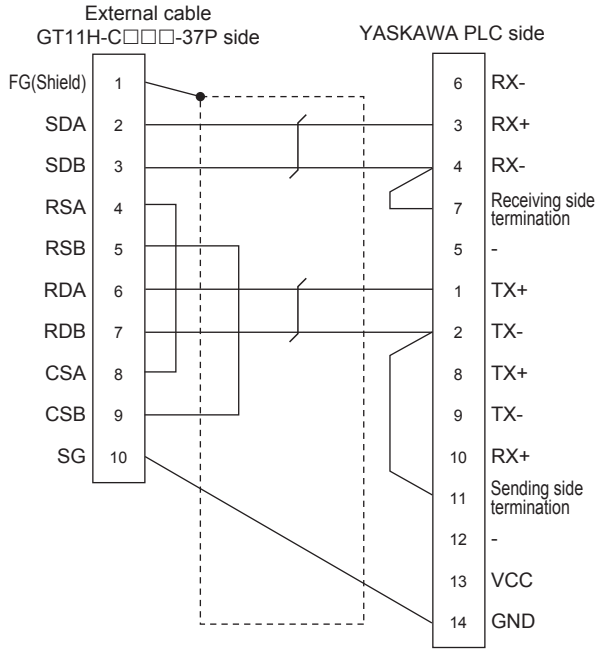

RS422 connection diagram 9)

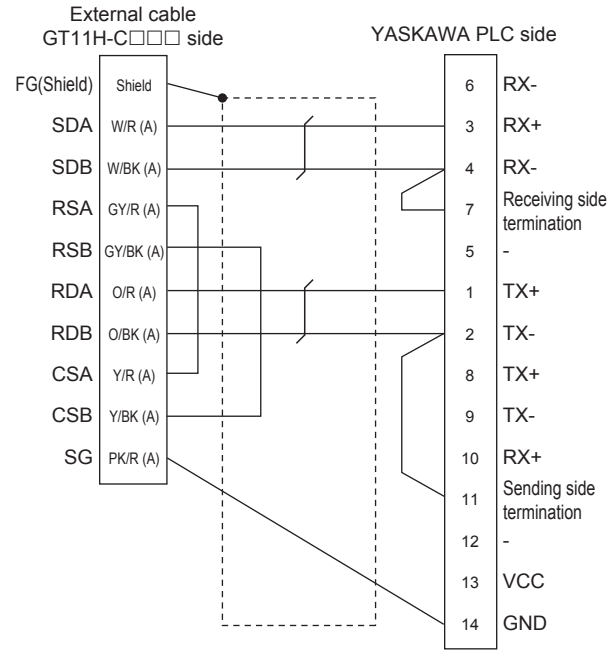

RS422 connection diagram 10)

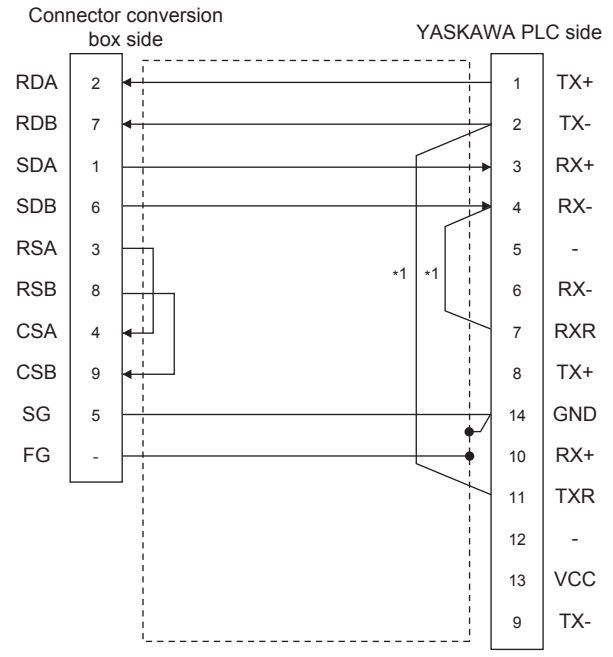

*1 Connect RXR with RX(-) and TXR with TX(-) of 217IF01, and insert the terminating resistor.

RS422 connection diagram 11)

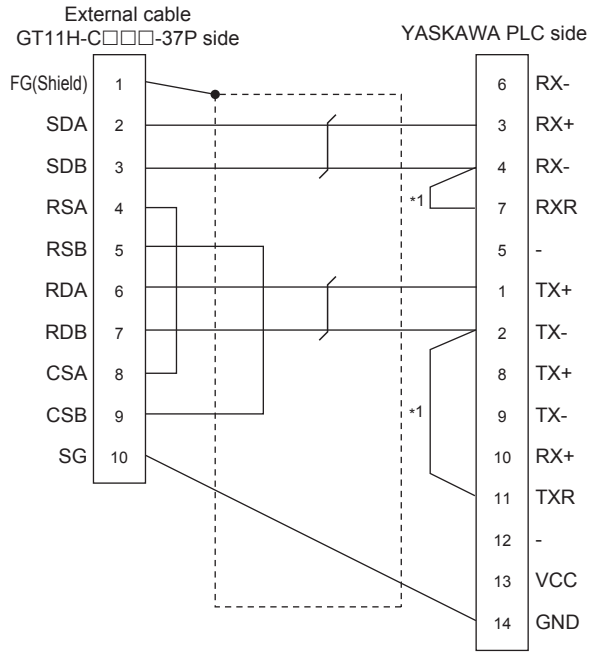

RS422 connection diagram 12)

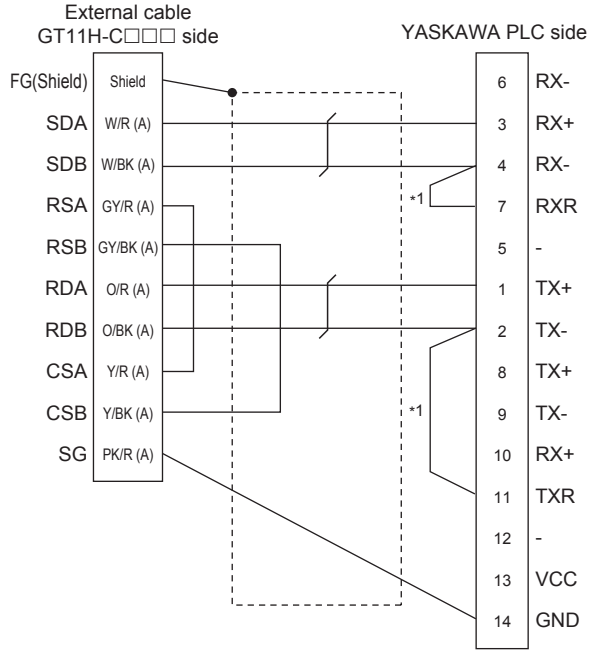

(2) Precautions when preparing a cable

(a) Cable length
The total distance (between GOT and controllers) of RS-422 cable must be 13m or less.

(b) Connector conversion box side connector
For the connector conversion box side connector, refer to the following.

☞ 6.6 Connector Conversion Box

(c) External cable side connector
For the connector specifications of the external cable side, refer to the following.

☞ 8.2 External Cable, Relay Cable

(d) YASKAWA PLC side connector
Use the connector compatible with the YASKAWA PLC side module.
For details, refer to the user's manuals for YASKAWA PLC.

(3) Connecting terminating resistors

(a) YASKAWA PLC side
When connecting a YASKAWA PLC to a GOT, connect a terminating resistor to the YASKAWA PLC if required.

☞ YASKAWA PLC user's Manual

49.2.8 GOT side settings

■ Setting communication interface (Communication settings)

Set the channel of the connected equipment.

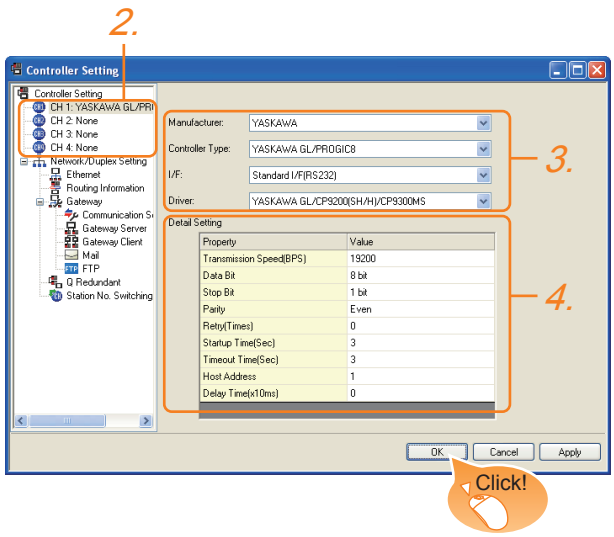

1. Select [Common] → [Controller Setting] from the menu.

2. The Controller Setting window is displayed. Select the channel to be used from the list menu.

3. Set the following items.
   - Manufacturer: YASKAWA
   - Controller Type: Set either of the followings.
     - GL/PROGIC8
     - CP9200SH/MP900 series
     - CP9200(H)
     - CP9300MS(MC compatible)
     - MP2000/MP900
     - MP2000/MP900/CP9200SH series
   - I/F: Interface to be used
   - Driver: Set either of the followings.
     - YASKAWA GL/CP9200(SH/H)/CP9300MS

   The detailed setting is displayed after Manufacturer, Controller Type, I/F, and Driver are set.
   Make the settings according to the usage environment.

   ☞ 49.2.8 ■ Communication detail settings

Click the OK button when settings are completed.

POINT

The settings of connecting equipment can be confirmed in [I/F Communication Setting].
For details, refer to the following.

☞ 18.1.2 I/F communication setting

■ Communication detail settings

Make the settings according to the usage environment.

(1) YASKAWA GL/CP9200(SH/H)/CP9300MS

Item	Description	Range
Transmission Speed	Set this item when change the transmission speed used for communication with the connected equipment. (Default: 19200bps)	4800bps, 9600bps, 19200bps, 38400bps, 57600bps
Data Bit	Set this item when change the data length used for communication with the connected equipment. (Default: 8bit)	8bit (fixed)
Stop Bit	Specify the stop bit length for communications. (Default: 1bit)	1bit (fixed)
Parity	Specify whether or not to perform a parity check, and how it is performed during communication. (Default: Even)	Even (fixed)
Retry	Set the number of retries to be performed when a communication error occurs. (Default: 0time)	0 to 5times
Startup Time	Specify the time period from the GOT startup until GOT starts the communication with the PLC CPU. (Default: 3sec)	3 to 30sec
Timeout Time	Set the time period for a communication to time out. (Default: 3sec)	3 to 30sec
Host Address	Specify the host address (station No. of the PLC to which the GOT is connected) in the network of the GOT. (Default: 1)	1 to 31
Delay Time	Set this item to adjust the transmission timing of the communication request from the GOT. (Default: 0ms)	0 to 30 (× 10 ms)

POINT

(1) Delay Time
When connecting to PLC CP-9200(H) and CP-9300MS, set the following.

Model		Delay Time
CP-9200(H)		30ms or more
CP-9300MS	port: 0	10ms or more
	port: 1	30ms or more

(2) Communication interface setting by Utility
The communication interface setting can be changed on the Utility's [Communication setting] after writing [Communication Settings] of project data.
For details on the Utility, refer to the following manual.

☞ 11. COMMUNICATION INTERFACE SETTING (COMMUNICATION SETTING)

(3) Precedence in communication settings
When settings are made by GT Designer3 or the Utility, the latest setting is effective.

49.2.9 PLC side setting

POINT

YASKAWA PLC
For details of YASKAWA PLCs, refer to the following manuals.

☞ YASKAWA PLC user's Manual

■ Communication and port settings

Make the communication and port settings with a peripheral tool.

Device name	Set value
Address*1	1 to 31
Protocol	MEMOBUS
Mode	RTU
Transmission speed*2*3	4800bps, 9600bps, 19200bps, 38400bps, 57600bps
Data bit	8bits
Stop bit	1bit
Parity bit	Even
Error check	CRC16

*1 Set the address according to the Host Address setting on the GOT side.
*2 Only transmission speeds available on the GOT side are shown.
Also, the setting range differs depending on the YASKAWA PLC model.
*3 Set the same transmission speed as that of the GOT side.

■ Sequence program

To communicate the YASKAWA PLCs with the GOT1000 series, the ladder program to receive messages is required. The following shows an example ladder program for MP2000 series.

Ladder program to receive messages

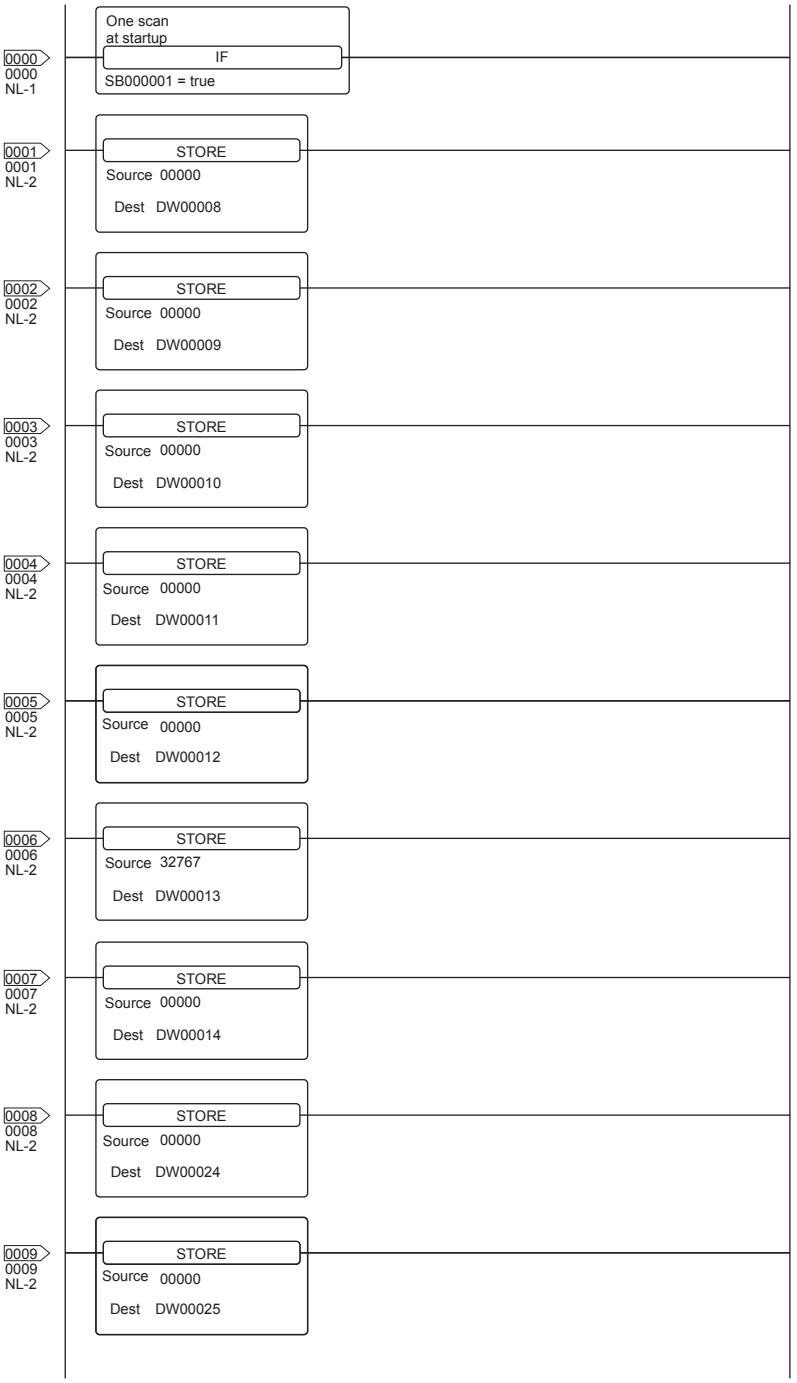

(Continued to next page)

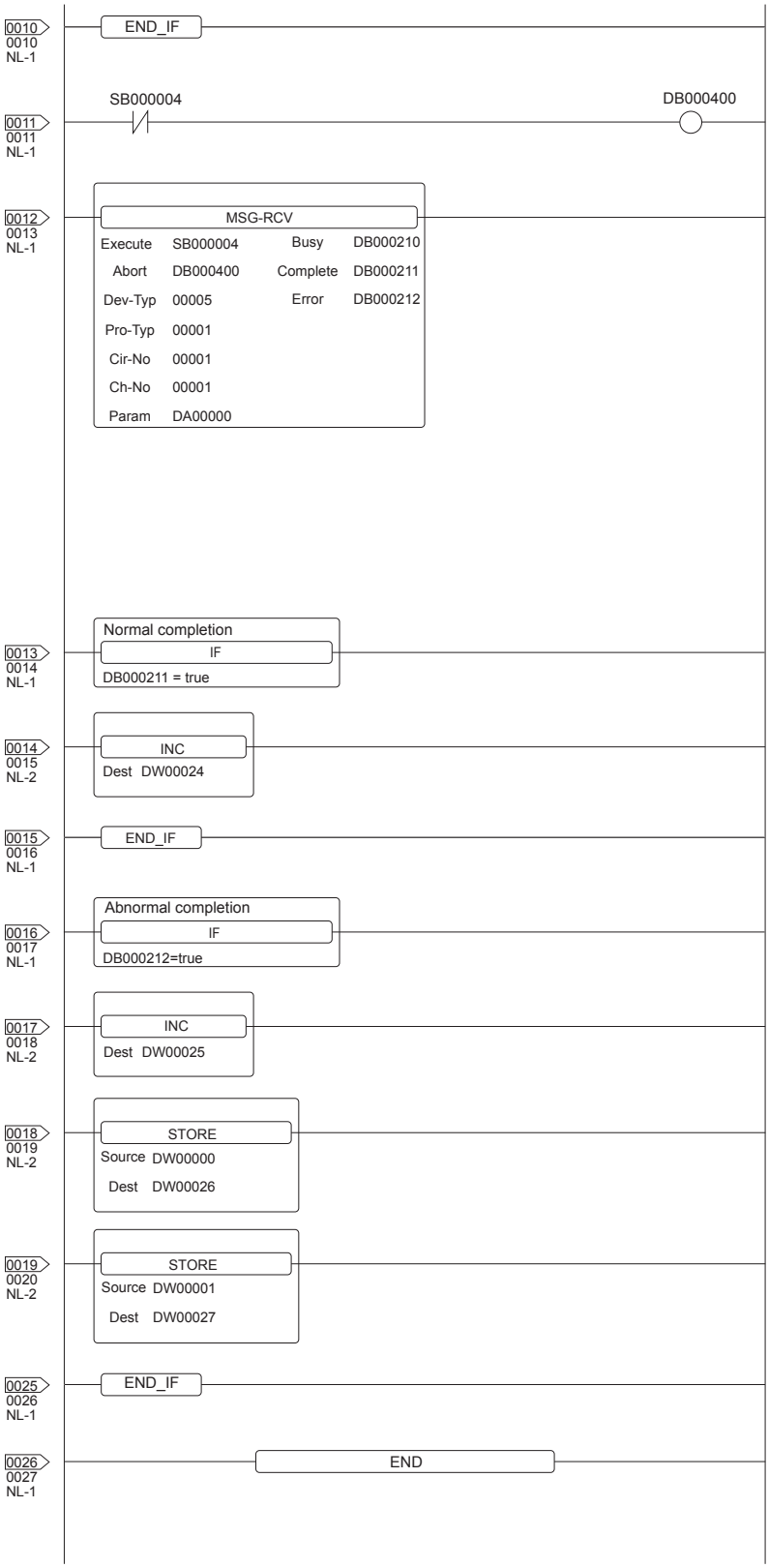

*1: Set 0 to PARAM08 to 11 of MSG_RCV (input relay, input register, coil, holding register offset). (Do not make the offset settings.)
When the offset is needed, set [Option] → [Offset] to each object or make a setting added the offset value to the device.

49.3 Ethernet Connection

49.3.1 System configuration for connecting to MP-920 or MP2200 or MP2300 or MP2300S or CP-9200SH or CP-312 or CP-317

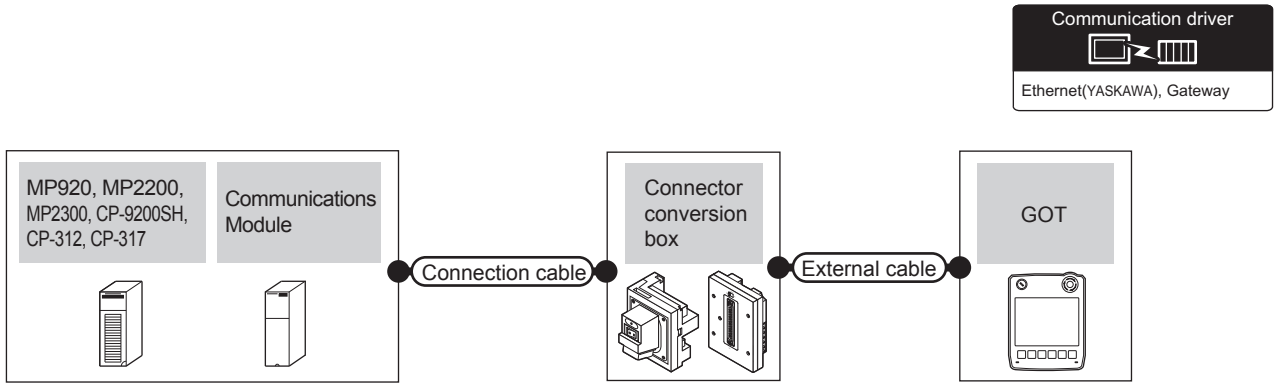

PLC		Connection cable*1	Connector conversion box	External cable*4	GOT model	Maximum segment length	Number of connectable equipment
Model	Communication module*3	Cable model Connection diagram number					
MP-920	218IF	• 10BASE-T Shielded twisted pair cable (STP) or Unshielded twisted pair cable (UTP): Category 3, 4, and 5 • 100BASE-TX Shielded twisted pair cable (STP): Category 5 and 5e	GT16H-CNB-42S	GT14H-C30-42P (3m) GT14H-C60-42P (6m) GT14H-C100-42P (10m)	GT14 Handy	100m *2	When PLC (module): GOT is N:1 The following shows the number of PLCs for 1 GOT TCP: 128 or less UDP: 128 or less When PLC (module): GOT is 1:N The following shows the number of GOTs for 1 PLC (module) TCP/UDP: 10 or less
			GT16H-CNB-37S	GT11H-C30-37P (3m) GT11H-C60-37P (6m) GT11H-C100-37P (10m)			
MP2200 MP2300 MP2300S	218IF-01 218IF-02		GT16H-CNB-42S	GT14H-C30-42P (3m) GT14H-C60-42P (6m) GT14H-C100-42P (10m)			
			GT16H-CNB-37S	GT11H-C30-37P (3m) GT11H-C60-37P (6m) GT11H-C100-37P (10m)			
CP-9200SH CP-312	CP-218IF		GT16H-CNB-42S	GT14H-C30-42P (3m) GT14H-C60-42P (6m) GT14H-C100-42P (10m)			
			GT16H-CNB-37S	GT11H-C30-37P (3m) GT11H-C60-37P (6m) GT11H-C100-37P (10m)			
CP-317	218TXB		GT16H-CNB-42S	GT14H-C30-42P (3m) GT14H-C60-42P (6m) GT14H-C100-42P (10m)			
			GT16H-CNB-37S	GT11H-C30-37P (3m) GT11H-C60-37P (6m) GT11H-C100-37P (10m)			

*1 The destination connected with the twisted pair cable varies with the configuration of the applicable Ethernet network system. Connect to the Ethernet module, hub, transceiver or other system equipment corresponding to the applicable Ethernet network system.
Use cables, connectors, and hubs that meet the IEEE802.3 10BASE-T/100BASE-TX standard.
The use of shielded twisted pair cable (STP) is recommended in environments in which the performance against noise is required.

*2 A length between a hub and a node.
The maximum distance differs depending on the Ethernet device to be used.
The following shows the number of the connectable nodes when a repeater hub is used.
- 10BASE-T: Max. 4 nodes for a cascade connection (500m)
- 100BASE-TX: Max. 2 nodes for a cascade connection (205m)

When switching hubs are used, the cascade connection between the switching hubs has no logical limit for the number of cascades.
For the limit, contact the switching hub manufacturer.

*3 Product manufactured by YASKAWA Electric Corporation. For details of the product, contact YASKAWA Electric Corporation.

*4 Use C or later version of GT11H-C□□-37P.

49.3.2 GOT side settings

■ Setting communication interface (Communication settings)

Set the channel of the connected equipment.

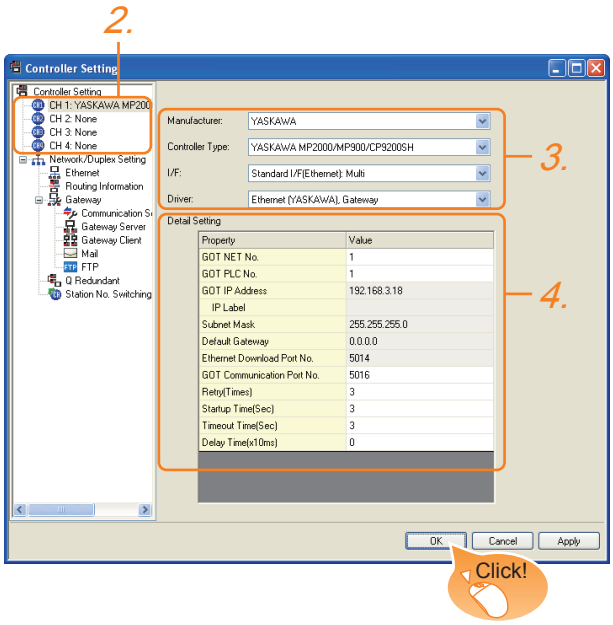

1. Select [Common] → [Controller Setting] from the menu.
2. The Controller Setting window is displayed. Select the channel to be used from the list menu.
3. Set the following items.
   - Manufacturer: YASKAWA
   - Controller Type: Set either of the followings.
     - CP9200SH/MP900 series
     - MP2000/MP900
   - I/F: Interface to be used
   - Driver: Ethernet (YASKAWA), Gateway
4. The detailed setting is displayed after Manufacturer, Controller Type, I/F, and Driver are set.
   Make the settings according to the usage environment.
   49.3.2 ■ Communication detail settings

Click the OK button when settings are completed.

POINT

The settings of connecting equipment can be confirmed in [I/F Communication Setting].
For details, refer to the following.
18.1.2 I/F communication setting

■ Communication detail settings

Make the settings according to the usage environment.

Item	Description	Range
GOT NET No.	Set the network No. of the GOT. (Default: 1)	1 to 239
GOT PLC No.*2	Set the station No. of the GOT. (Default: 1)	1 to 64
GOT IP Address*1	Set the IP address of the GOT. (Default: 192.168.3.18)	0.0.0.0 to 255.255.255.255
Subnet Mask*1	Set the subnet mask for the sub network. (Only for connection via router) If the sub network is not used, the default value is set. (Default: 255.255.255.0)	0.0.0.0 to 255.255.255.255
Default Gateway*1	Set the router address of the default gateway where the GOT is connected. (Only for connection via router) (Default: 0.0.0.0)	0.0.0.0 to 255.255.255.255
Ethernet Download Port No.*1	Set the GOT port No. for Ethernet download. (Default: 5014)	1024 to 5010, 5014 to 65534 (Except for 5011, 5012, 5013, and 49153)
GOT Communication Port No.	Set the GOT port No. for the connection with the Ethernet module. (Default: 5016)	1024 to 5010, 5014 to 65534 (Except for 5011, 5012, 5013, and 49153)
Retry	Set the number of retries to be performed when a communication timeout occurs. When receiving no response after retries, the communication times out. (Default: 3times)	0 to 5times
Startup Time	Specify the time period from the GOT startup until GOT starts the communication with the PLC CPU. (Default: 3sec)	3 to 255sec
Timeout Time	Set the time period for a communication to time out. (Default: 3sec)	3 to 90sec
Delay Time	Set the delay time for reducing the load of the network/destination PLC. (Default: 0ms)	0 to 10000 (× 10 ms)

*1 Click the Setting button and perform the setting in the [GOT IP Address Setting] screen.

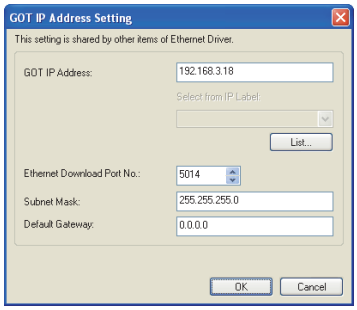

*2 Each of [GOT PLC No.] set in the communication detail setting and [PLC No.] set in the Ethernet setting must be set to different station numbers.
49.3.2 ■ Ethernet setting

■ Ethernet setting

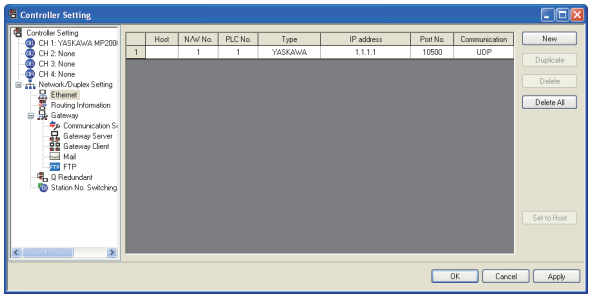

Item	Description	Set value
Host	The host is displayed. (The host is indicated with an asterisk (*).)	-
N/W No.	Set the network No. of the connected Ethernet module. (Default: blank)	1 to 239
PLC No.*1	Set the station No. of the connected Ethernet module. (Default: blank)	1 to 64
Controller Type	YASKAWA (fixed)	YASKAWA (fixed)
IP Address	Set the IP address of the connected Ethernet module. (Default: blank)	PLC side IP address
Port No.	Set the port No. of the connected Ethernet module. (Default: 10500)	256 to 65534
Communication	Select a communication protocol. (Default: UDP)	UDP, TCP

*1 Each of [GOT PLC No.] set in the communication detail setting and [PLC No.] set in the Ethernet setting must be set to different station numbers.

49.3.2 ■ Communication detail settings

POINT

(1) Communication interface setting by Utility
The communication interface setting can be changed on the Utility's [Communication setting] after writing [Communication Settings] of project data.
For details on the Utility, refer to the following manual.

11. COMMUNICATION INTERFACE SETTING (COMMUNICATION SETTING)

(2) Precedence in communication settings
When settings are made by GT Designer3 or the Utility, the latest setting is effective.

49.3.3 PLC side setting (MP2000 series, MP920 series)

POINT

YASKAWA PLC
For details of YASKAWA PLCs, refer to the following manuals.

YASKAWA PLC user's Manual

■ Parameter setting

(1) Settings for 218IF-01
Make the parameter settings with a peripheral tool.

Item		Set value	Range
Parameter setting	Local IP Address	[ ].[ ].[ ].[ ]	PLC side IP address
	Response Time	0	Not required for communication with GOT
	Count of Retry (Number of Retries)	0	Not required for communication with GOT
	CNO*1 (Connection Number)	1	1 to 20
	Local Port (Local Station's Port Number)	10500	256 to 65534
	Node IP Address*2	[ ].[ ].[ ].[ ]	GOT side IP address
	Node Port (Remote Station's Port Number)*2	[ ]	GOT side port No.
	Connection Type	UDP (recommended)	UDP/TCP
	Protocol Type	Extended MEMOBUS	Extended MEMOBUS, MEMOBUS, MELSEC, None, MODBUS/TCP
	Code	BIN	RTU, BIN, ACII
	Node Name (Remote Station's Name)	GOT1000	Name of GOT
Local Port: TCP/IP Setting	Subnet Mask	[ ].[ ].[ ].[ ]	PLC side setting
	Gateway IP Address	[ ].[ ].[ ].[ ]	
	System Port No. (Diagnostic/Engineering Port No.)	10000	
	TCP (Transmission Control Protocol) Zero Window Timer Value	3 (s)	
	TCP Retry Time	500 (ms)	
	TCP Close Time	60 (s)	
	IP Assemble Time	30 (s)	
	MAX. Packet Length	1500 bytes	

*1 When MITSUBISHI PLC and YASKAWA PLC are used together in the same network, do not set the same value for the PLC No. of MITSUBISHI PLC and the CNO (Connection number) of YASKAWA PLC.

*2 Set the same the Node IP Address (Remote Station's IP Address) and the Node Port (Remote Station's Port Number) as the Local IP Address and the Local Port (Local Station's Port Number) on the GOT side.
For the Local IP Address and the Local Port (Local Station's Port Number) on the GOT side, refer to the following.

49.3.2 ■ Ethernet setting

(2) Setting for the built-in MP2300S Ethernet and 218IF-02

Make the parameter settings with a peripheral tool.

Item		Set value	Range
Transmission parameter setting	IP Address	[ ].[ ].[ ].[ ]	PLC side IP address
	Subnet Mask	[ ].[ ].[ ].[ ]	PLC side setting
	Gateway IP Address	[ ].[ ].[ ].[ ]	
	Device name	Arbitrary	Up to 16 one-byte characters
Transmission parameter detailed setting	Engineering Port	256 to 65535	For a connection with software MPE720
	Response Time	0	Not required for communication with GOT
	Count of Retry (Number of Retries)	0	
Message communication of connection parameter setting	Connection Number	1	• Range of built in MP2300S Ethernet: 1 to 4 • Range of 218IF-02: 1 to 20
	Local Port	10500	256 to 65534
	Node IP Address*1	[ ].[ ].[ ].[ ]	GOT side IP address
	Node Port*1	[ ]	GOT side port No.
	Connection Type	UDP (recommended)	UDP/TCP
	Protocol Type	Extended MEMOBUS	Extended MEMOBUS, MEMOBUS, MELSEC, None, MODBUS/TCP
	Code	BIN	RTU, BIN, ACII
	Node Name (Remote Station's Name)	Arbitrary	Up to 32 one-byte characters (16 two-byte characters)

*1 Set the same the Node IP Address (Remote Station's IP Address) and the Node Port (Remote Station's Port Number) as the Local IP Address and the Local Port (Local Station's Port Number) on the GOT side.
For the Local IP Address and the Local Port (Local Station's Port Number) on the GOT side, refer to the following.

49.3.2 ■ Ethernet setting

(3) Setting of 218TXB

(a) DIP switch (SW2) setting

Set all the "unused" switches to off. When the "unused" switches are on, the PLC does not operate properly. In addition, when the PLC is operated with the TEST switch on, the module shifts to the self-check mode and communication is disabled. To start communication, turn the TEST switch to off.

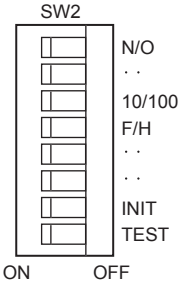

Display	Name	Status	Operation	Set value
N/O	Mode selection	ON	Extended mode (13 channels, Max. 1024 words)	ON (Extended mode)
		OFF	Basic mode (10 channels, Max. 512 words)	
-	Unused			OFF
10/100	Transmission speed	ON	10Mbs	OFF (100Mbps)
		OFF	100Mbps	
F/H	Transmission mode	ON	Full duplex mode communication	OFF (Half duplex mode)
		OFF	Half duplex mode communication	
INIT	Initial startup	ON	Startup with the default IP address and the default engineering port No.	OFF
		OFF	Startup with the IP address and the engineering port No set in CP-717.	
TEST	TEST	ON	Self check (Self check is conducted when the module is started with the TEST switch on.)	OFF
		OFF		

(b) Parameter setting

Make the parameter settings with a peripheral tool.

Item		Set value	Range
Transmission parameter setting	IP Address	[ ].[ ].[ ].[ ]	PLC side IP address
	Subnet Mask	[ ].[ ].[ ].[ ]	PLC side setting
	Gateway IP Address	[ ].[ ].[ ].[ ]	
	Device name	Arbitrary	Up to 16 one-byte characters
Transmission parameter detailed setting	Engineering Port	256 to 65535	For a connection with software MPE720
	Response Time	0	Not required for communication with GOT
	Count of Retry (Number of Retries)	0	
Message communication of connection parameter setting	Connection Number	1	• Range of built in MP2300S Ethernet: 1 to 4 • Range of 218IF-02: 1 to 20
	Local Port	10500	256 to 65534
	Node IP Address*1	[ ].[ ].[ ].[ ]	GOT side IP address
	Node Port*1	[ ]	GOT side port No.
	Connection Type	UDP (recommended)	UDP/TCP
	Protocol Type	Extended MEMOBUS	Extended MEMOBUS, MEMOBUS, MELSEC, None, MODBUS/TCP
	Code	BIN	RTU, BIN, ACII
	Node Name (Remote Station's Name)	Arbitrary	Up to 32 one-byte characters (16 two-byte characters)

*1 Set the same the Node IP Address (Remote Station's IP Address) and the Node Port (Remote Station's Port Number) as the Local IP Address and the Local Port (Local Station's Port Number) on the GOT side.
For the Local IP Address and the Local Port (Local Station's Port Number) on the GOT side, refer to the following.

49.3.2 ■ Ethernet setting

■ Sequence program

To communicate the MP2000 series or MP920 series with the GOT1000 series, the ladder program to receive messages is required. When connecting the MP2000 series or MP920 series with multiple GOTs, ladder programs to receive messages for each GOT are required.

Ladder program to receive messages

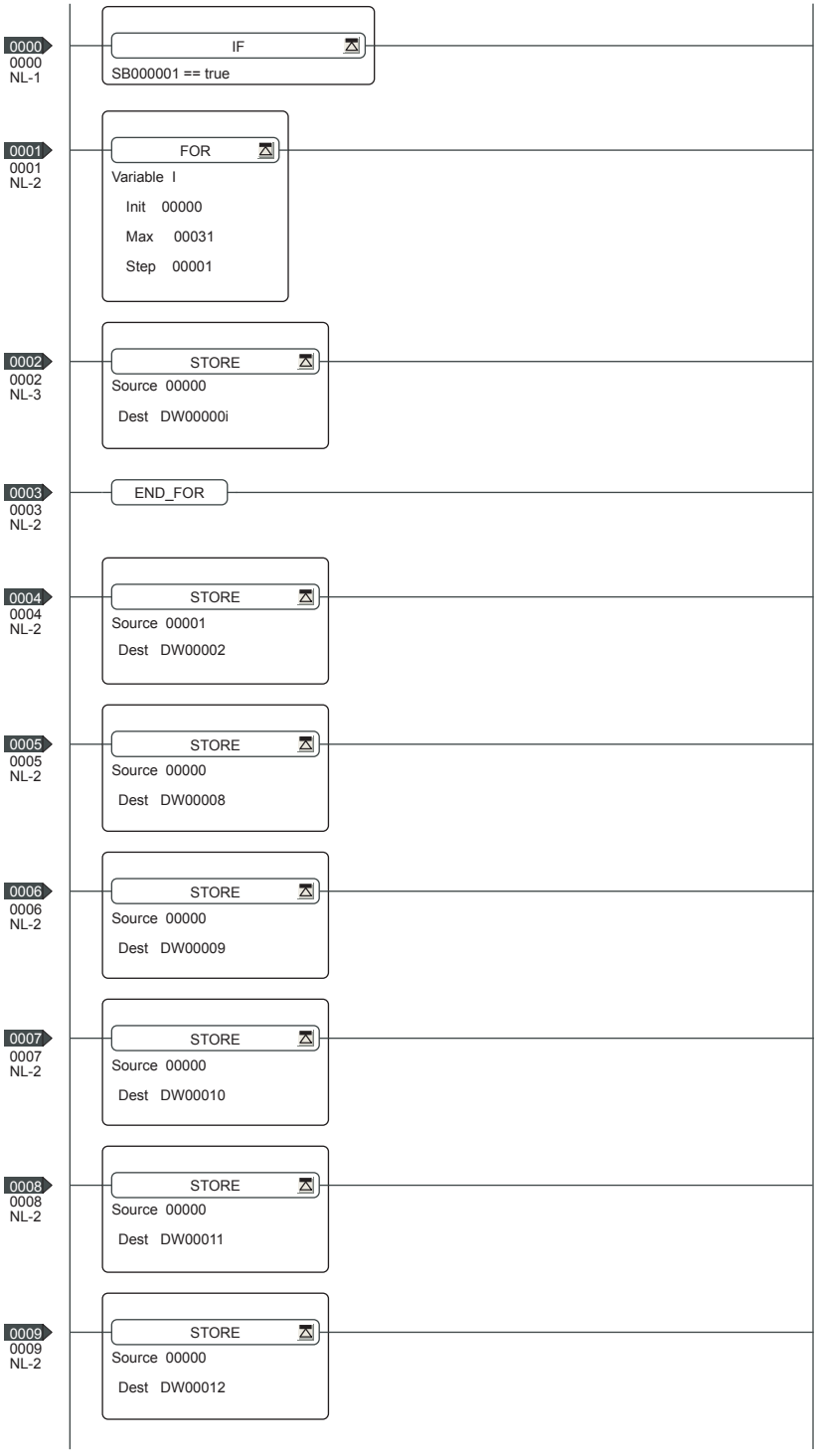

(Continued to next page)

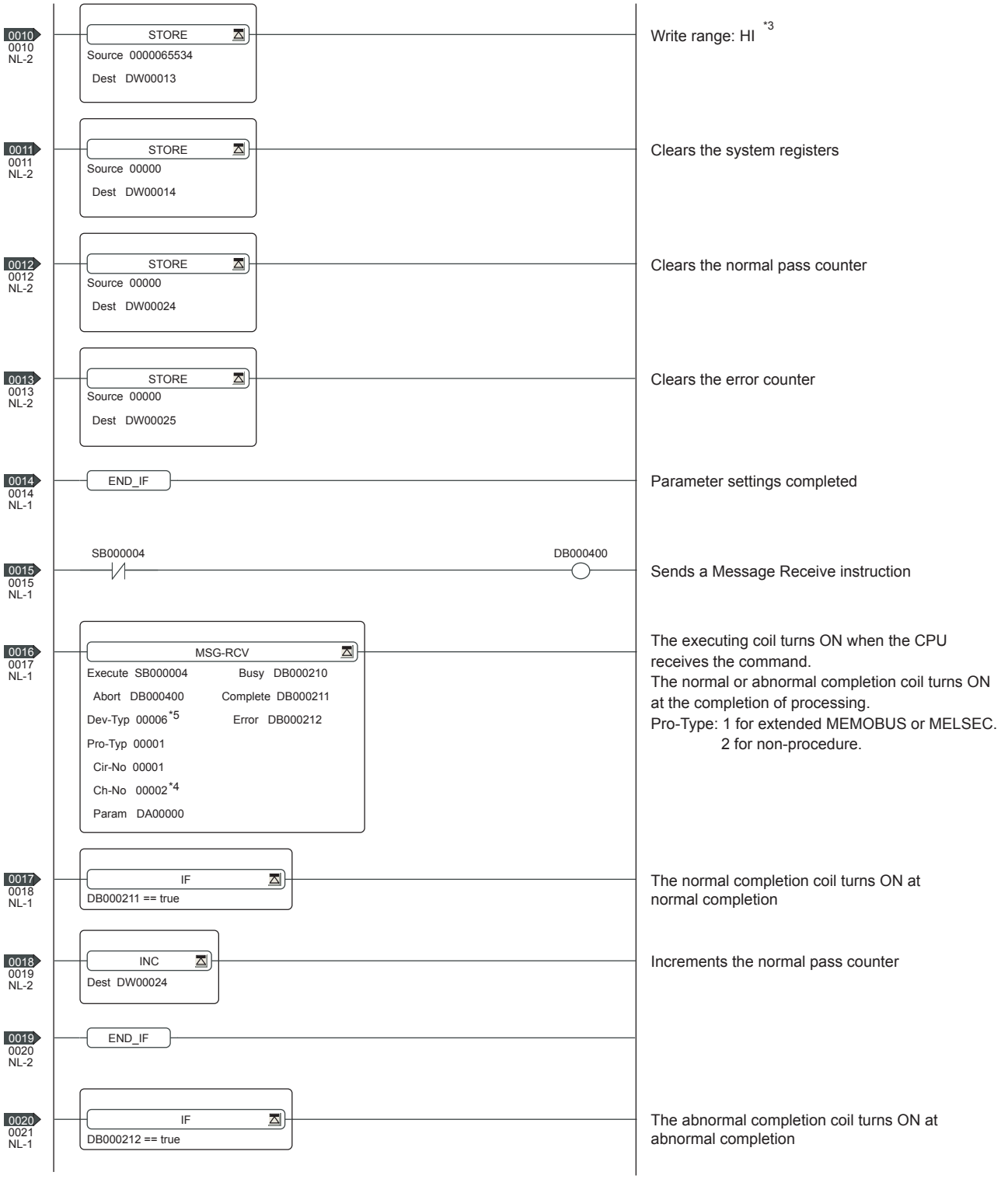

(Continued to next page)

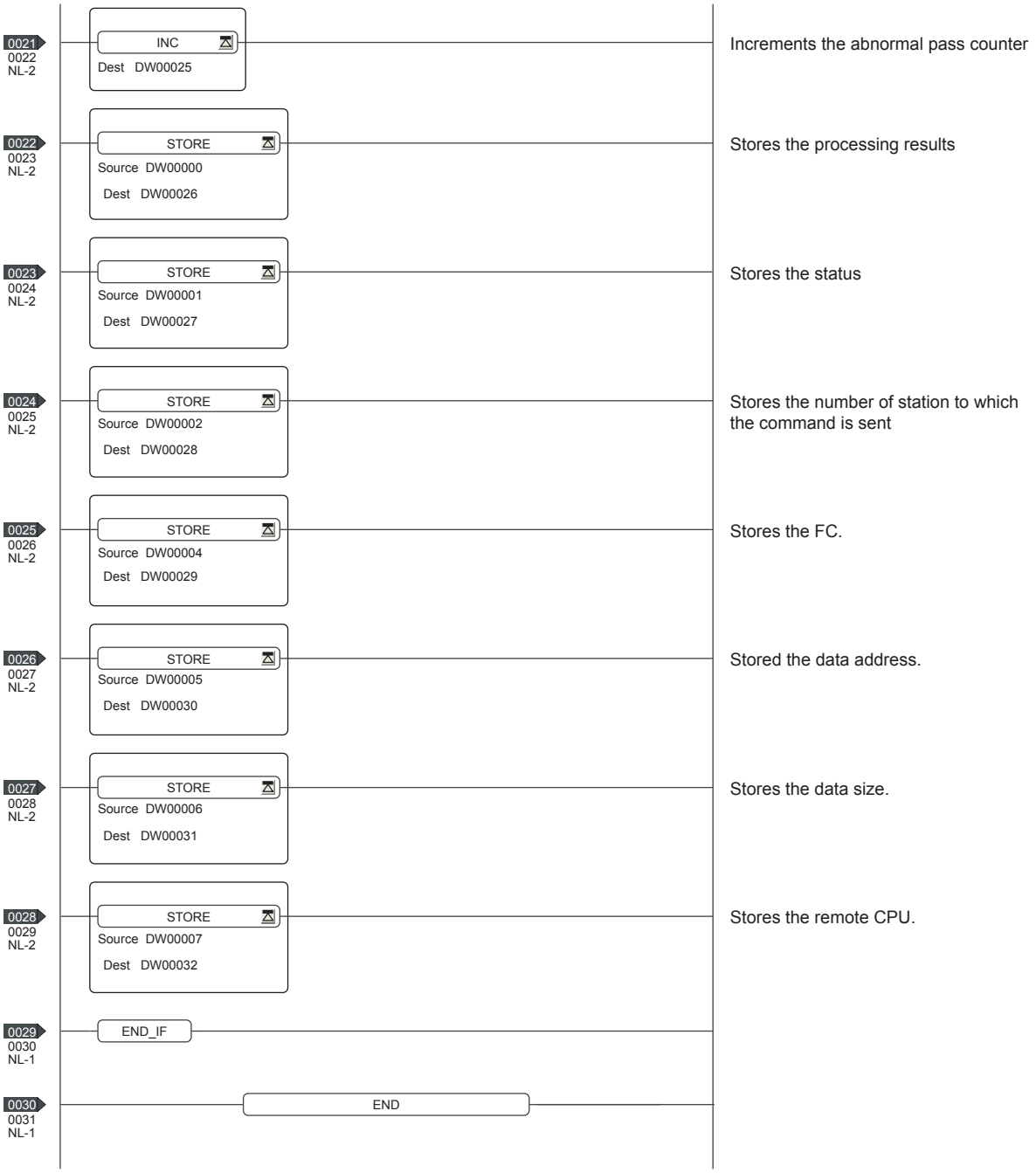

*1 When connecting to multiple GOTs, set connection numbers individually for each GOT.

*2 Set 0 to PARAM08 to 11 of MSG_RCV (input relay, input register, coil, holding register offset). (Do not make the offset settings.) When the offset is needed, set [Option] [Offset] to each object or make a setting added the offset value to the device.

*3 Set the available write range for the holding registers.

*4 When connecting to multiple GOTs, set channel numbers individually for each GOT.

*5 Set the Dev-Typ of the message receive function <MSG-RCV> to [00016] for the built-in MP2300S Ethernet connection or the Ethernet port connection of 218IF-02.

49.3.4 PLC side setting (CP-9200SH series, CP-312 series)

POINT

YASKAWA PLC

For details of YASKAWA PLCs, refer to the following manuals.

☞ YASKAWA PLC user's Manual

■ Parameter setting

Make the parameter settings with a peripheral tool.

Settings for CP-218IF

Item	Set value
Module Type	CP-218
CPU Number	01
Circuit Number	01
Hot Swapping	○

Item	CNO 03	CNO 04	CNO 05
Local Port	10500	10501	10030
Node IP Address*1	192.168.001.018	192.168.001.020	192.168.001.073
Node Port*1	05016	05017	21001
Connection Type	TCP	TCP	UDP
Protocol Type	Extended MEMOBUS	Extended MEMOBUS	Extended MEMOBUS
Code	BIN	BIN	BIN

*1 Be sure to set the values above for the address so that the GOT communicates with the programmable controller correctly.
For the Host Address setting on the GOT side, refer to the following.

☞ 49.3.2 ■ Ethernet setting

■ Sequence program

To communicate the CP-9200SH, CP-312, or CP-317 series with the GOT1000 series, the ladder program to receive messages is required. When connecting the CP-9200SH, CP-312, or CP-317 series with multiple GOTs, ladder programs to receive messages for each GOT are required.

Ladder program to receive messages

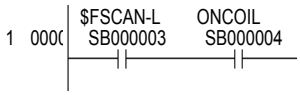

```
1  0000 | $FSCAN-L      ONCOIL
        |  SB000003     SB000004
        |-----||-----------||-------
        |                                                                  |
1  0002  IFON

2  0003  FOR          I      = 00000     to  00031     by 00001

3  0007 ├ 00000                                    ⇒DW00000    ...=001        .../044

2  0009  FEND

                                                   DW-002
2  0010 ├ 00003                                    ⇒DW00002    ...=002

                                                   DW-008
2  0012 ├ 00000                                    ⇒DW00008    ...=003  *1

                                                   DW-009
2  0014                                            ⇒DW00009    ...=004  *1

                                                   DW-010
2  0015                                            ⇒DW00010    ...=005  *1

                                                   DW-011
2  0016 ├ 16500                                    ⇒DW00011    ...=006  *1

                                                   DW-012
2  0018 ├ 16500                                    ⇒DW00012    ...=007

                                                   DW-013
2  0020 ├ 18499                                    ⇒DW00013    ...=008

1  0022  IEND
```

(Continued to next page)

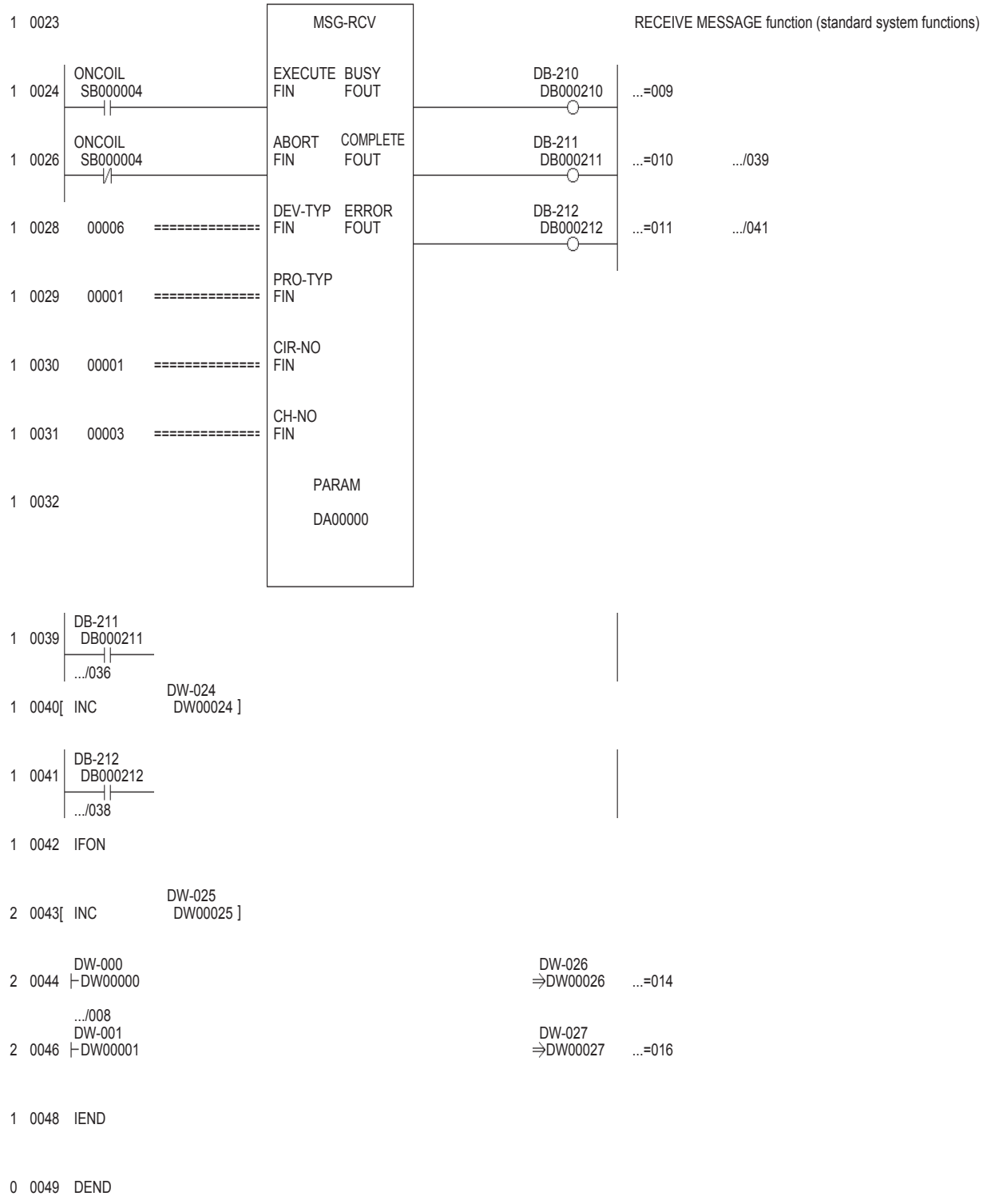

*1 Set 0 to PARAM08 to 11 of MSG_RCV (input relay, input register, coil, holding register offset). (Do not make the offset settings.) When the offset is needed, set [Option] → [Offset] to each object or make a setting added the offset value to the device.

49.3.5 Precautions

■ When connecting to multiple GOTs

(1) Setting PLC No.
When connecting two or more GOTs in the Ethernet network, set each [PLC No.] to the GOT.

☞ 49.3.2 ■ Ethernet setting

(2) Setting IP address
Do not use the IP address "192.168.0.18" when using multiple GOTs.
A communication error may occur on the GOT with the IP address.

■ When setting IP address

Do not use "0" and "255" at the end of an IP address.
(Numbers of *.*.*.0 and *.*.*.255 are used by the system)
The GOT may not monitor the controller correctly with the above numbers.
Consult with the administrator of the network before setting an IP address to the GOT and controller.

■ When connecting to the multiple network equipment (including GOT) in a segment

By increasing the network load, the transmission speed between the GOT and PLC may be reduced.
The following actions may improve the communication performance.

- Using a switching hub
- More high speed by 100BASE-TX (100Mbps)
- Reduction of the monitoring points on GOT

49.4 Device Range that Can Be Set

For details on the device range of controllers that can be used on GT14 Handy, refer to the following manuals.

☞ GT Designer3 Version1 Screen Design Manual (Fundamentals)

☞ GOT1000 Series Connection Manual (Non-Mitsubishi Products 2) for GT Works3

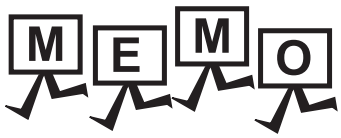
MEMO

50. CONNECTION TO YOKOGAWA PLC

50.1 Connectable Model List

The following table shows the connectable models.

Series	Model	Clock	Communication type	GT14 Handy	Refer to
FA-M3	F3SP05	○	RS-232 RS-422	○	50.2.1
	F3SP08				
	F3SP10				
	F3SP20				
	F3SP30				
	F3FP36				
	F3SP21				
	F3SP22-0S				
	F3SP25				
	F3SP35				
	F3SP28				
	F3SP38				
	F3SP53				
	F3SP58				
	F3SP59				
	F3SP66				
	F3SP67				
FA-M3V	F3SP76-7S				
	F3SP71-4S				
FA500	FA500	○	RS-232 RS-422	○	50.2.2
STARDOM	NFCP100	×	RS-232	○	50.2.3
	NFJT100				
FA-M3	F3SP05	○	Ethernet	○	50.3.1
	F3SP08				
	F3FP36				
	F3SP21				
	F3SP25				
	F3SP35				
	F3SP28				
	F3SP38				
	F3SP53				
	F3SP58				
	F3SP59				
	F3SP66				
	F3SP67				
	F3SP71-4N				
FA-M3V	F3SP76-7S				
	F3SP71-4S				

50.2 Serial Connection

50.2.1 System configuration for connecting to FA-M3/M3V

■ When using the conversion cable

Communication driver
YOKOGAWA
FA500/FA-M3/STARDOM

(1) When using the connector conversion box

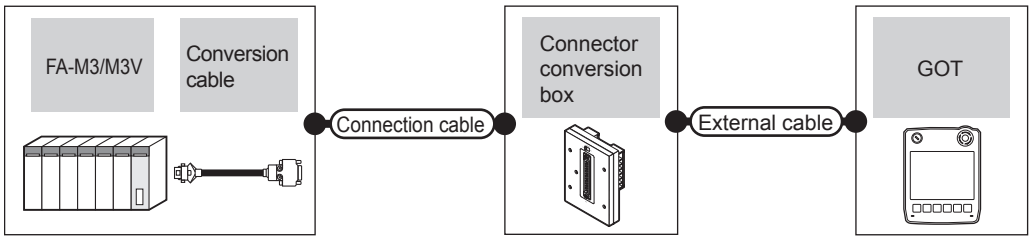

PLC			Connection cable	Connector conversion box	External cable	GOT model	Total distance	Number of connectable equipment
Model	Conversion cable*1	Communication type	Cable model Connection diagram number					
F3SP05 F3SP08 F3SP21 F3SP22-0S F3SP25 F3SP28 F3SP35 F3SP38 F3SP53 F3SP58 F3SP59	KM10-0C*2	RS-232	GT09-C30R20301-9P(3m) or User preparing RS232 connection diagram 1)	GT11H-CNB-37S	GT11H-C30-37P(3m)	GT14 Handy	6m*4	1 GOT for 1 PLC
F3SP66 F3SP67	KM10-0S*3	RS-232						

*1 Product manufactured by Yokogawa Electric Corporation. For details of the product, contact Yokogawa Electric Corporation.
*2 CPU port/D-Sub 9-pin conversion cable
*3 SIO port adapter cable
*4 Including the length of the CPU port/D-Sub 9-pin conversion cable or the SIO port adapter cable.

(2) When using the external cable (GT11H-C□□□-37P)

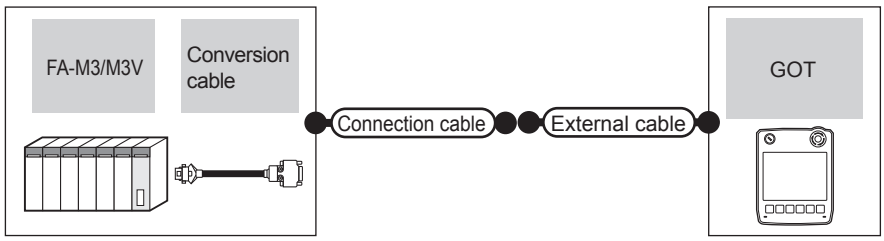

PLC			Connection cable	External cable	GOT model	Total distance	Number of connectable equipment
Model	Conversion cable*1	Communication type	Cable model Connection diagram number				
F3SP05 F3SP08 F3SP21 F3SP22-0S F3SP25 F3SP28 F3SP35 F3SP38 F3SP53 F3SP58 F3SP59	KM10-0C*2	RS-232	User preparing RS232 connection diagram 2)	GT11H-C30-37P(3m)	GT14 Handy	6m*4	1 GOT for 1 PLC
F3SP66 F3SP67	KM10-0S*3	RS-232					

*1 Product manufactured by Yokogawa Electric Corporation. For details of the product, contact Yokogawa Electric Corporation.
*2 CPU port/D-Sub 9-pin conversion cable
*3 SIO port adapter cable
*4 Including the length of the CPU port/D-Sub 9-pin conversion cable or the SIO port adapter cable.

(3) When using the external cable (GT11H-C□□□)

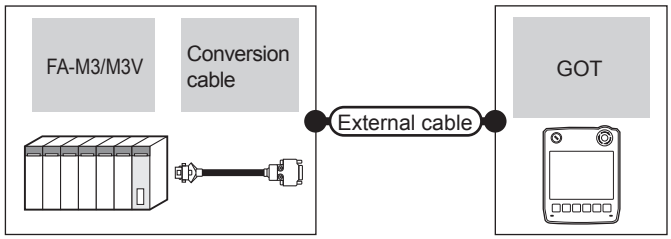

PLC			External cable	GOT model	Total distance	Number of connectable equipment
Model	Conversion cable*1	Communication type				
F3SP05 F3SP08 F3SP21 F3SP22-0S F3SP25 F3SP28 F3SP35 F3SP38 F3SP53 F3SP58 F3SP59	KM10-0C*2	RS-232	GT11H-C30(3m) GT11H-C60(6m) User preparing RS232 connection diagram 3)	GT14 Handy	6m*4	1 GOT for 1 PLC
F3SP66 F3SP67	KM10-0S*3	RS-232				

*1 Product manufactured by Yokogawa Electric Corporation. For details of the product, contact Yokogawa Electric Corporation.
*2 CPU port/D-Sub 9-pin conversion cable
*3 SIO port adapter cable
*4 Including the length of the CPU port/D-Sub 9-pin conversion cable or the SIO port adapter cable.

■ When using the PC link module

(1) When using the connector conversion box

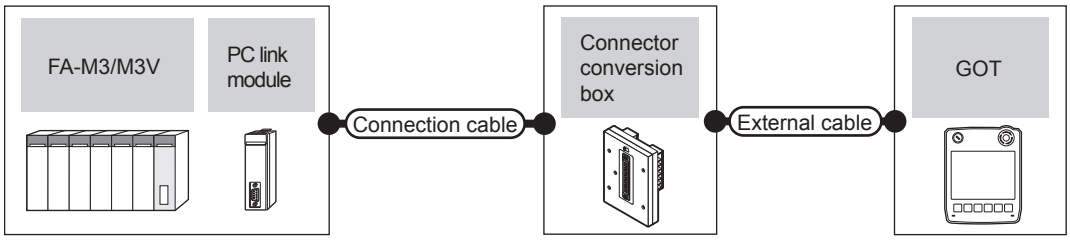

PLC			Connection cable	Connector conversion box	External cable	GOT model	Total distance	Number of connectable equipment
Model	PC link module*1	Communication type	Cable model Connection diagram number					
F3SP05 F3SP08 F3SP10 F3SP20 F3SP30 F3FP36 F3SP21 F3SP25 F3SP35 F3SP28 F3SP38 F3SP53 F3SP58 F3SP59 F3SP66 F3SP67	F3LC01-1N F3LC11-1N F3LC11-1F F3LC12-1F	RS-232	GT09-C30R20302-9P(3m) or User preparing RS232 connection diagram 4)	GT11H-CNB-37S	GT11H-C30-37P(3m)	GT14 Handy	6m	1 GOT for 1 PC link module
F3SP76-7S F3SP71-4S	F3LC12-1F							
F3SP05 F3SP08 F3SP20 F3SP30 F3FP36 F3SP21 F3SP25 F3SP35 F3SP28 F3SP38 F3SP53 F3SP58 F3SP59 F3SP66 F3SP67 F3SP71-4S	F3LC11-2N F3LC11-2F	RS-422	GT09-C30R40301-6T(3m) GT09-C100R40301-6T(10m) or User preparing RS422 connection diagram 1)	GT11H-CNB-37S	GT11H-C30-37P(3m) GT11H-C60-37P(6m) GT11H-C100-37P(10m)	GT14 Handy	13m	

*1 Product manufactured by Yokogawa Electric Corporation. For details of the product, contact Yokogawa Electric Corporation.

(2) When using the external cable (GT11H-C□□□-37P)

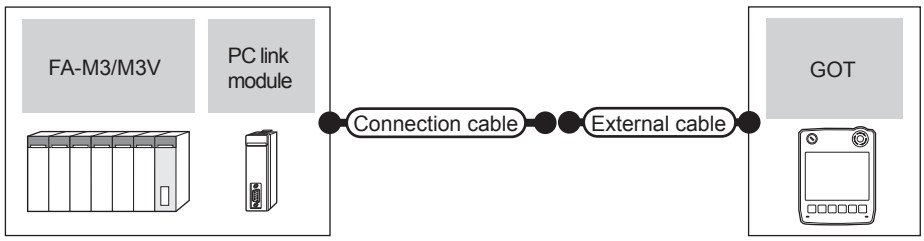

PLC			Connection cable	External cable	GOT model	Total distance	Number of connectable equipment
Model	PC link module*1	Communication type	Cable model Connection diagram number				
F3SP05 F3SP08 F3SP10 F3SP20 F3SP30 F3FP36 F3SP21 F3SP25 F3SP35 F3SP28 F3SP38 F3SP53 F3SP58 F3SP59 F3SP66 F3SP67	F3LC01-1N F3LC11-1N F3LC11-1F F3LC12-1F	RS-232	User preparing RS232 connection diagram 5)	GT11H-C30-37P(3m)	GT14 Handy	6m	1 GOT for 1 PC link module
F3SP76-7S	F3LC12-1F						
F3SP05 F3SP08 F3SP20 F3SP30 F3FP36 F3SP21 F3SP25 F3SP35 F3SP28 F3SP38 F3SP53 F3SP58 F3SP59 F3SP66 F3SP67	F3LC11-2N F3LC11-2F	RS-422	User preparing RS422 connection diagram 2)	GT11H-C30-37P(3m) GT11H-C60-37P(6m) GT11H-C100-37P(10m)	GT14 Handy	13m	

*1 Product manufactured by Yokogawa Electric Corporation. For details of the product, contact Yokogawa Electric Corporation.

(3) When using the external cable (GT11H-C□□□)

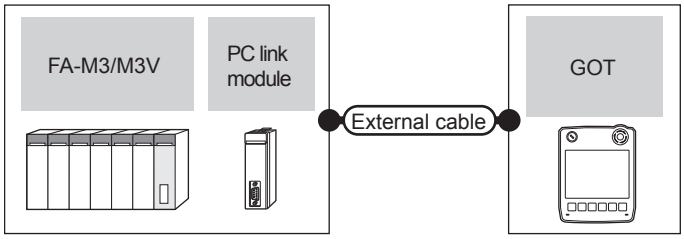

PLC			External cable	GOT model	Total distance	Number of connectable equipment
Model	PC link module*1	Communication type				
F3SP05 F3SP08 F3SP10 F3SP20 F3SP30 F3FP36 F3SP21 F3SP25 F3SP35 F3SP28 F3SP38 F3SP53 F3SP58 F3SP59 F3SP66 F3SP67	F3LC01-1N F3LC11-1N F3LC11-1F F3LC12-1F	RS-232	GT11H-C30(3m) GT11H-C60(6m) User preparing RS232 connection diagram 6)	GT14 Handy	6m	1 GOT for 1 PC link module
F3SP76-7S	F3LC12-1F					
F3SP05 F3SP08 F3SP20 F3SP30 F3FP36 F3SP21 F3SP25 F3SP35 F3SP28 F3SP38 F3SP53 F3SP58 F3SP59 F3SP66 F3SP67	F3LC11-2N F3LC11-2F	RS-422	GT11H-C30(3m) GT11H-C60(6m) GT11H-C100(10m) User preparing RS422 connection diagram 3)	GT14 Handy	13m	

*1 Product manufactured by Yokogawa Electric Corporation. For details of the product, contact Yokogawa Electric Corporation.

50.2.2 System configuration for connecting to FA500

Communication driver
YOKOGAWA
FA500/FA-M3/STARDOM

(1) When using the connector conversion box

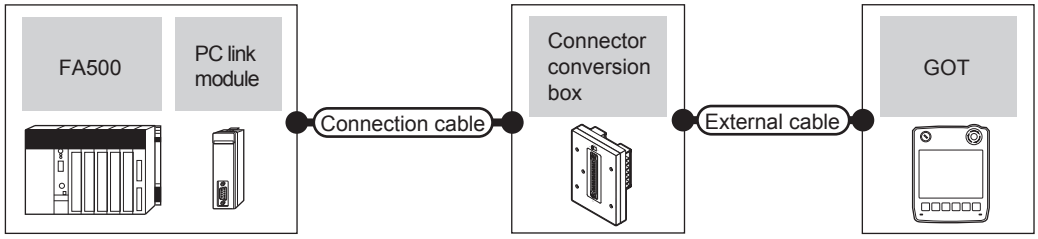

PLC			Connection cable	Connector conversion box	External cable	GOT model	Total distance	Number of connectable equipment
Series	PC link module*1	Communication type	Cable model Connection diagram number					
FA500	LC01-0N LC02-0N	RS-232	GT09-C30R20205-25P(3m) or User preparing RS232 connection diagram 7)	GT11H-CNB-37S	GT11H-C30-37P(3m)	GT14 Handy	6m	1 GOT for 1 PC link module
	LC02-0N	RS-422	GT09-C30R40302-6T(3m) GT09-C100R40302-6T(10m) or User preparing RS422 connection diagram 4)	GT11H-CNB-37S	GT11H-C30-37P(3m) GT11H-C60-37P(6m) GT11H-C100-37P(10m)	GT14 Handy	13m	

*1 Product manufactured by Yokogawa Electric Corporation. For details of the product, contact Yokogawa Electric Corporation.

(2) When using the external cable (GT11H-C□□□-37P)

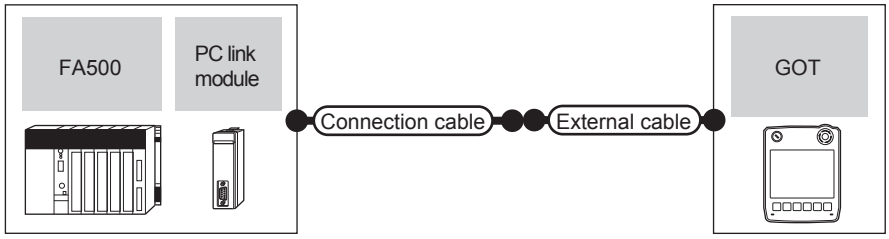

PLC			Connection cable	External cable	GOT model	Total distance	Number of connectable equipment
Series	PC link module*1	Communication type	Cable model Connection diagram number				
FA500	LC01-0N LC02-0N	RS-232	User preparing RS232 connection diagram 8)	GT11H-C30-37P(3m)	GT14 Handy	6m	1 GOT for 1 PC link module
	LC02-0N	RS-422	User preparing RS422 connection diagram 5)	GT11H-C30-37P(3m) GT11H-C60-37P(6m) GT11H-C100-37P(10m)	GT14 Handy	13m	

*1 Product manufactured by Yokogawa Electric Corporation. For details of the product, contact Yokogawa Electric Corporation.

(3) When using the external cable (GT11H-C□□□)

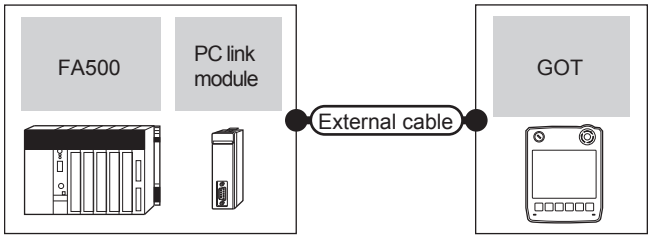

PLC			External cable	GOT model	Total distance	Number of connectable equipment
Series	PC link module*1	Communication type				
FA500	LC01-0N LC02-0N	RS-232	GT11H-C30(3m) GT11H-C60(6m) User preparing RS232 connection diagram 9)	GT14 Handy	6m	1 GOT for 1 PC link module
	LC02-0N	RS-422	GT11H-C30(3m) GT11H-C60(6m) GT11H-C100(10m) User preparing RS422 connection diagram 6)	GT14 Handy	13m	

*1 Product manufactured by Yokogawa Electric Corporation. For details of the product, contact Yokogawa Electric Corporation.

50.2.3 System configuration for connecting to STARDOM

Communication driver
YOKOGAWA
FA500/FA-M3/STARDOM

(1) When using the connector conversion box

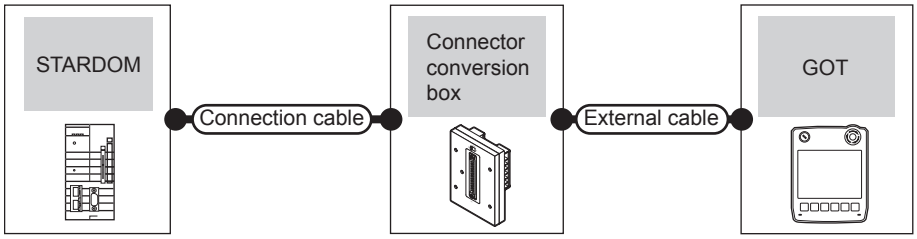

PLC		Connection cable*1	Connector conversion box	External cable	GOT model	Total distance	Number of connectable equipment
Series	Communication type	Cable model Connection diagram number					
STARDOM	RS-232	GT09-C30R20305-9S(3m) or User preparing RS232 connection diagram 4)	GT11H-CNB-37S	GT11H-C30-37P(3m)	GT14 Handy	6m	1 GOT for 1 PLC

*1 Connect the connection cable to the COM port of the PLC.

(2) When using the external cable (GT11H-C□□□-37P)

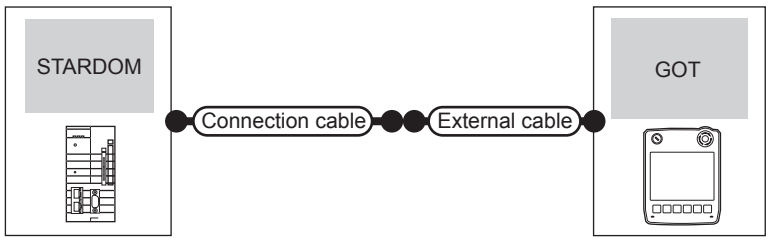

PLC		Connection cable*1	External cable	GOT model	Total distance	Number of connectable equipment
Series	Communication type	Cable model Connection diagram number				
STARDOM	RS-232	User preparing RS232 connection diagram 5)	GT11H-C30-37P(3m)	GT14 Handy	6m	1 GOT for 1 PLC

*1 Connect the connection cable to the COM port of the PLC.

(3) When using the external cable (GT11H-C□□□)

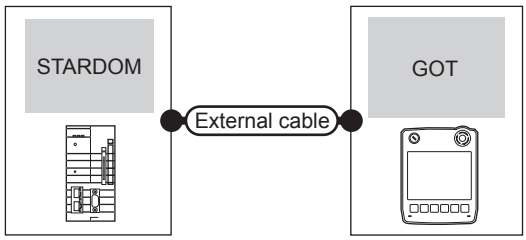

PLC		External cable	GOT model	Total distance	Number of connectable equipment
Series	Communication type				
STARDOM	RS-232	GT11H-C30(3m) GT11H-C60(6m) User preparing RS232 connection diagram 6)	GT14 Handy	6m	1 GOT for 1 PLC

50.2.4 Connection diagram

The following diagram shows the connection between the GOT and the PLC.

■ RS-232 cable

(1) Connection diagram

RS232 connection diagram 1)

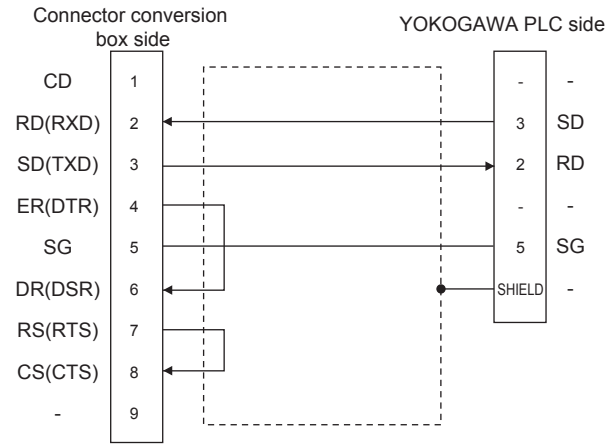

RS232 connection diagram 2)

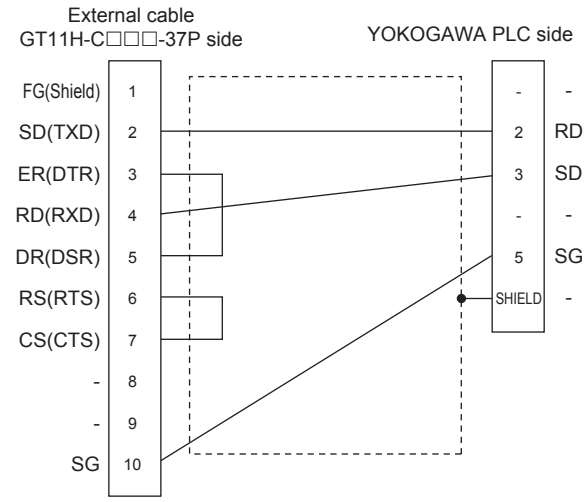

RS232 connection diagram 3)

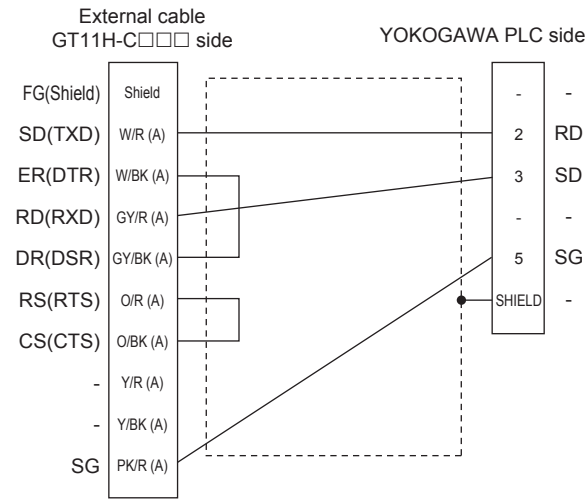

RS232 connection diagram 4)

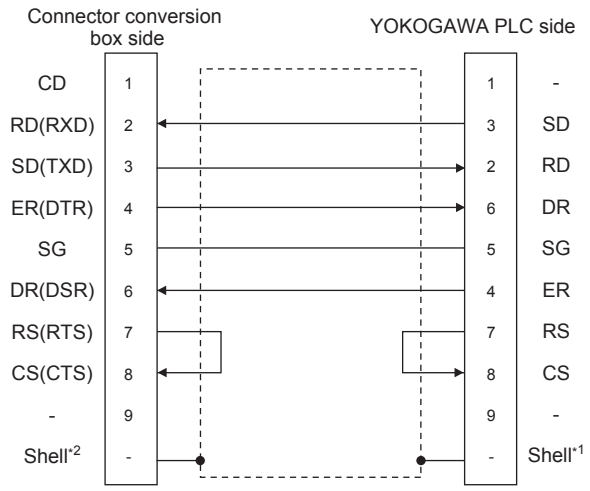

*1 Connect the shield to the housing of the connectors on both the GOT and YOKOGAWA product sides.

RS232 connection diagram 5)

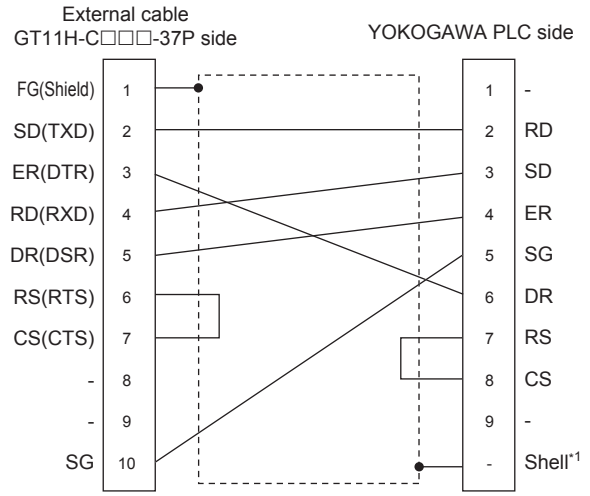

*1 Connect the shield to the housing of the connector on the YOKOGAWA product side.

RS232 connection diagram 6)

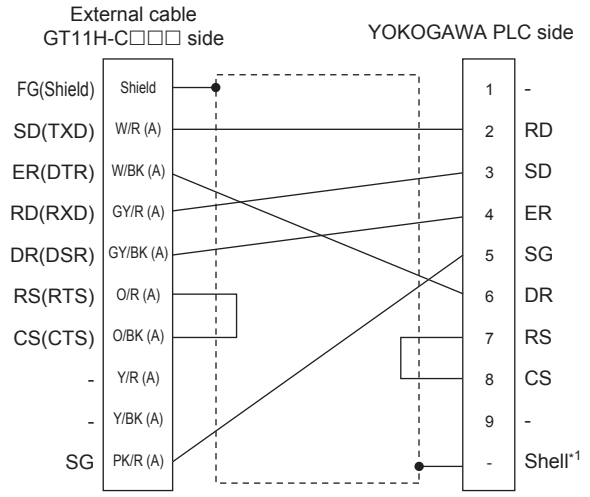

*1 Connect the shield to the housing of the connector on the YOKOGAWA product side.

RS232 connection diagram 7)

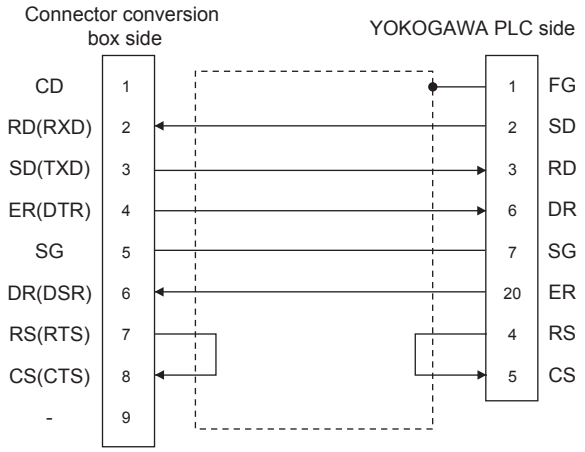

RS232 connection diagram 8)

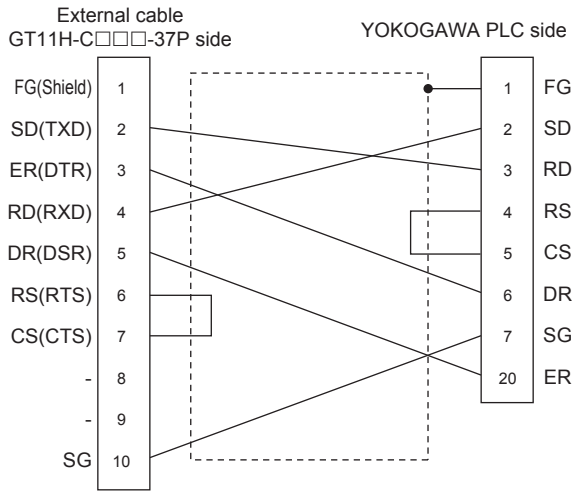

RS232 connection diagram 9)

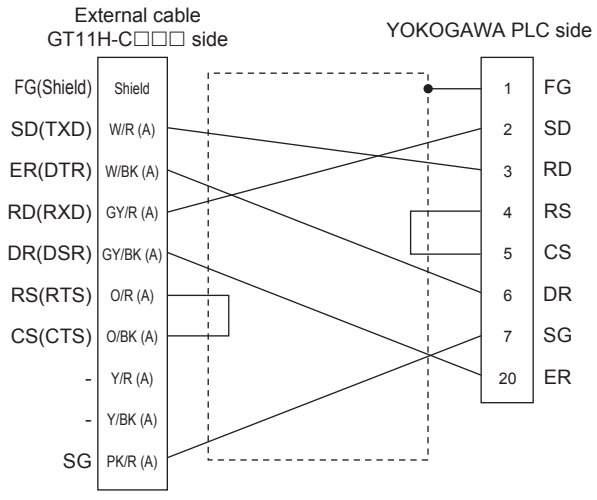

(2) Precautions when preparing a cable

(a) Cable length
The total distance (between the GOT and a controller) of RS-232 cable must be 6m or less.

(b) Connector conversion box side connector
For the connector conversion box side connector, refer to the following.

☞ 6.6 Connector Conversion Box

(c) External cable side connector
For the connector specifications of the external cable side, refer to the following.

☞ 8.2 External Cable, Relay Cable

(d) YOKOGAWA PLC side connector
Use the connector compatible with the YOKOGAWA PLC side module.
For details, refer to the YOKOGAWA PLC user's manual.

■ RS-422 cable

(1) Connection diagram

RS422 connection diagram 1)

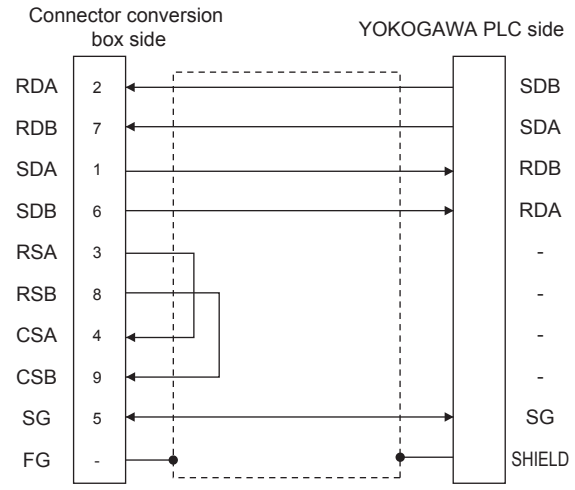

RS422 connection diagram 2)

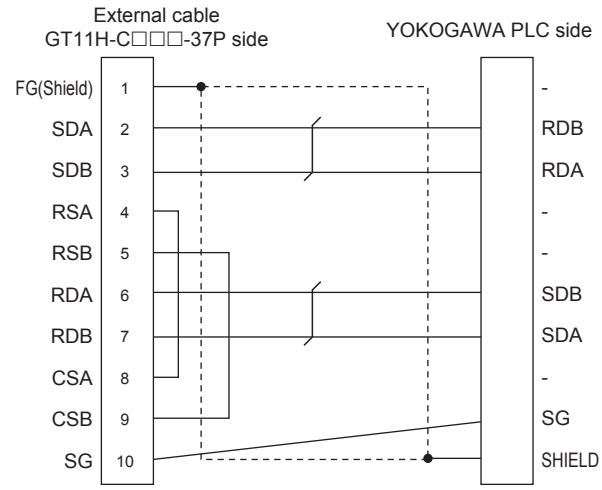

RS422 connection diagram 3)

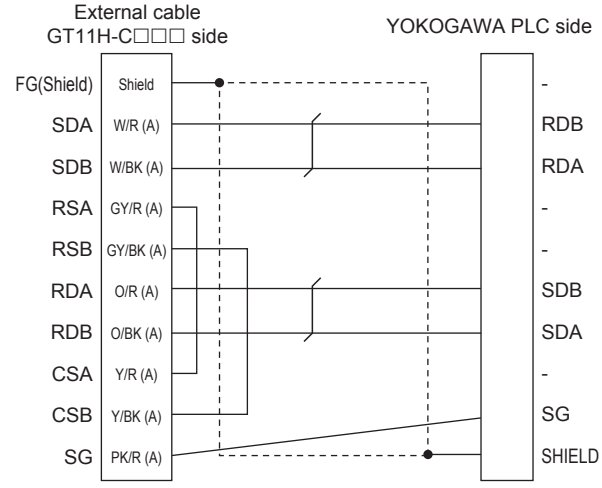

RS422 connection diagram 4)

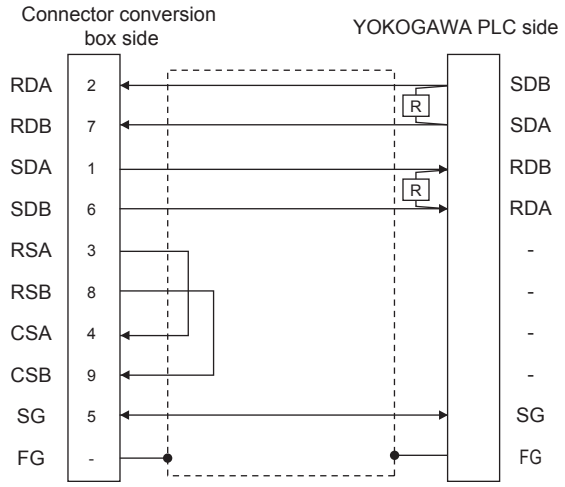

RS422 connection diagram 5)

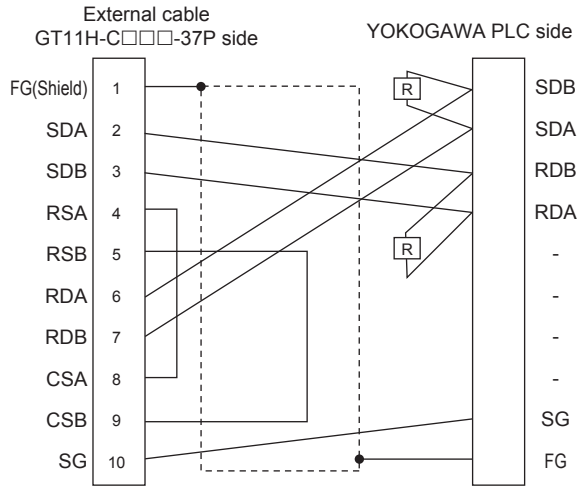

RS422 connection diagram 6)

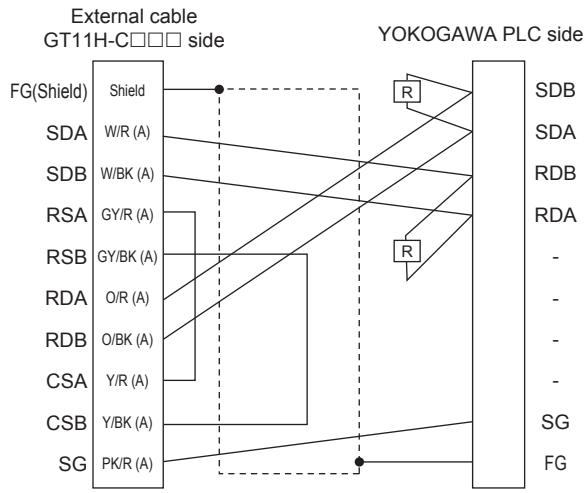

(2) Precautions when preparing a cable

(a) Cable length
The total distance (between GOT and controllers) of RS-422 cable must be 13m or less.

(b) Connector conversion box side connector
For the connector conversion box side connector, refer to the following.

☞ 6.6 Connector Conversion Box

(c) External cable side connector
For the connector specifications of the external cable side, refer to the following.

☞ 8.2 External Cable, Relay Cable

(d) YOKOGAWA PLC side connector
Use the connector compatible with the YOKOGAWA PLC side module.
For details, refer to the YOKOGAWA PLC user's manual.

(3) Connecting terminating resistors

(a) YOKOGAWA PLC side
When connecting a PLC link module to a GOT, a terminating resistor must be connected to the PC link module.
The following describes how to connect it on the PC link module.
• F3LC11-2N
Set the terminator switch (TERMINATOR) on the front panel of F3LC11-2N to the "4-WIRE" side to enable the terminator.
• LC02-0N
Connect the terminating resistor provided with the LC02-0N across SDA and SDB, and across RDA and RDB on the terminal block.

50.2.5 GOT side settings

■ Setting communication interface (Communication settings)

Set the channel of the connected equipment.

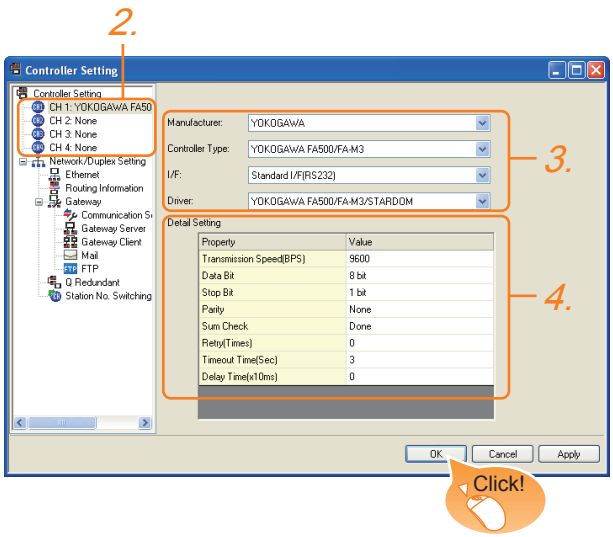

1. Select [Common] → [Controller Setting] from the menu.
2. The Controller Setting window is displayed. Select the channel to be used from the list menu.
3. Set the following items.
   - Manufacturer: YOKOGAWA
   - Controller Type: Set either of the followings.
     - FA500/FA-M3 series
     - STARDOM/FA-M3 series
   - I/F: Interface to be used
   - Driver: YOKOGAWA FA500/FA-M3/STARDOM
4. The detailed setting is displayed after Manufacturer, Controller Type, I/F, and Driver are set.
   Make the settings according to the usage environment.

   50.2.5 ■ Communication detail settings

Click the OK button when settings are completed.

POINT

The settings of connecting equipment can be confirmed in [I/F Communication Setting].
For details, refer to the following.

18.1.2 I/F communication setting

■ Communication detail settings

Make the settings according to the usage environment.

Item	Description	Range
Transmission Speed	Set this item when change the transmission speed used for communication with the connected equipment. (Default: 9600bps)	4800bps, 9600bps, 19200bps, 38400bps, 57600bps, 115200bps
Data Bit	Set this item when change the data length used for communication with the connected equipment. (Default: 8bit)	7bit/8bit
Stop Bit	Specify the stop bit length for communications. (Default: 1bit)	1bit/2bits
Parity	Specify whether or not to perform a parity check, and how it is performed during communication. (Default: None)	None Even Odd
Sum Check	Set whether or not to perform a sum check during communication. (Default: Yes)	Yes or No
Retry	Set the number of retries to be performed when a communication timeout occurs. When receiving no response after retries, the communication times out. (Default: 0time)	0 to 5times
Timeout Time	Set the time period for a communication to time out. (Default: 3sec)	3 to 30sec
Delay Time	Set this item to adjust the transmission timing of the communication request from the GOT. (Default: 0ms)	0 to 30 (× 10 ms)

POINT

(1) Communication interface setting by Utility
The communication interface setting can be changed on the Utility's [Communication setting] after writing [Communication Settings] of project data.
For details on the Utility, refer to the following manual.

11. COMMUNICATION INTERFACE SETTING (COMMUNICATION SETTING)

(2) Precedence in communication settings
When settings are made by GT Designer3 or the Utility, the latest setting is effective.

50.2.6 PLC side setting

POINT

YOKOGAWA PLC

For details of YOKOGAWA PLCs, refer to the following manuals.

☞ YOKOGAWA PLC user's Manual

Model		Refer to
CPU port/D-Sub 9-pin conversion cable	KM10-0C	50.2.7
SIO port adapter cable	KM10-0S	
PC link module	F3LC01-1N	50.2.8
	F3LC11-1N	
	F3LC11-2N	
	F3LC11-1F	50.2.9
	F3LC12-1F	
	LC01-0N	50.2.10
	LC02-0N	
STARDOM		50.2.11

50.2.7 Connecting to CPU port/D-sub 9-pin conversion cable, SIO port adapter cable

■ Setting of PLC CPU

Make the PLC CPU settings, displaying [Configuration] → [Communication Settings] with the program development tool or the ladder-programming tool.

<table>
<tr><th>Item</th><th>Set value</th></tr>
<tr><td>Communication mode*1</td><td>Set the communication mode of the CPU (transmission speed and data format).
Set the transmission speed and data format according to settings of the transmission speed, data length, parity and stop bit on the GOT side.
<table>
<tr><th rowspan="2">Item</th><th colspan="4">Transmission speed and data format</th></tr>
<tr><th>Transmission speed</th><th>Data Bit</th><th>Parity</th><th>Stop Bit</th></tr>
<tr><td>Communication mode 0</td><td>9600 bps</td><td>8bits</td><td>Even</td><td>1bit</td></tr>
<tr><td>Communication mode 1</td><td>9600 bps</td><td>8bits</td><td>None</td><td>1bit</td></tr>
<tr><td>Communication mode 2</td><td>19200 bps</td><td>8bits</td><td>Even</td><td>1bit</td></tr>
<tr><td>Communication mode 3</td><td>19200 bps</td><td>8bits</td><td>None</td><td>1bit</td></tr>
<tr><td>Communication mode 4</td><td>38400 bps</td><td>8bits</td><td>Even</td><td>1bit</td></tr>
<tr><td>Communication mode 5</td><td>38400 bps</td><td>8bits</td><td>None</td><td>1bit</td></tr>
<tr><td>Communication mode 6</td><td>57600 bps</td><td>8bits</td><td>Even</td><td>1bit</td></tr>
<tr><td>Communication mode 7</td><td>57600 bps</td><td>8bits</td><td>None</td><td>1bit</td></tr>
<tr><td>Communication mode 8</td><td>115200 bps</td><td>8bits</td><td>Even</td><td>1bit</td></tr>
<tr><td>Communication mode 9</td><td>115200 bps</td><td>8bits</td><td>None</td><td>1bit</td></tr>
</table></td></tr>
<tr><td>CPU PC link function settings</td><td>Set the following when using the CPU programming port as the PC link function.
Make the checksum setting according to the sum check setting on the GOT side.
<table>
<tr><th>Item</th><th>Set value</th></tr>
<tr><td>Use of PC link function</td><td>Mark. (Use enabled)</td></tr>
<tr><td>Checksum</td><td>Mark. (ON) Do not mark. (OFF)</td></tr>
<tr><td>End character</td><td>Do not mark. (OFF)</td></tr>
<tr><td>Protect function</td><td>Do not mark. (OFF)</td></tr>
</table></td></tr>
</table>

*1 The communication mode that can be selected differs according to the CPU.

50.2.8 Connecting to PC link module (F3LC01-1N, F3LC11-1N, F3LC11-2N, F3LC11-2F)

■ Switch setting on the PC link module

Set the switches accordingly.

POINT

Switch setting

Set the switches before mounting the Ethernet Interface Module on the base unit.

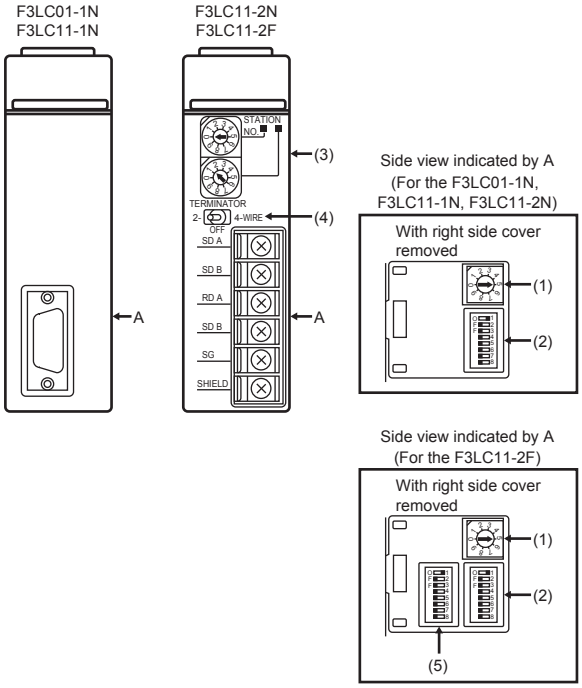

(1) Transmission speed setting switch

Set the same transmission speed of the GOT.

Setting*1	Transmission speed
4	4800bps
5	9600bps
6	19200bps

*1 Only transmission speeds available on the GOT side are shown.

(2) Data format setting switch

Set the data length, parity, stop bit and checksum consistent with the corresponding settings on the GOT side.

Switch No.	Description	Setting
1	Data bit	ON (8bits), OFF (7bits)
2	Parity	ON (done), OFF (none)
3		ON (even), OFF (odd)
4	Stop bit	ON (2bits), OFF (1bit)
5	Checksum	ON (done), OFF (none)
6	End character specification	OFF (none)
7	Protect function	OFF (none)
8	-	OFF

(3) Station No. switch (F3LC11-2N only)

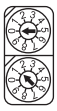

Rotary switch	Description	Setting
1)	Station No. (10's digit)	0
2)	Station No. (1's digit)	1

(4) Terminator switch (F3LC11-2N only)

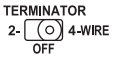

Setting	Description
4-WIRE	Resistor connected (4-wire type)

(5) SW3 switch (F3LC11-2F only)

Unused switch.Turn off all the unused switches.

50.2.9 Connecting to PC link module (F3LC11-1F, F3LC12-1F)

■ Switch setting on the PC link module

Set the switches accordingly.

POINT

Switch setting

Set the switches before mounting the Ethernet Interface Module on the base unit.

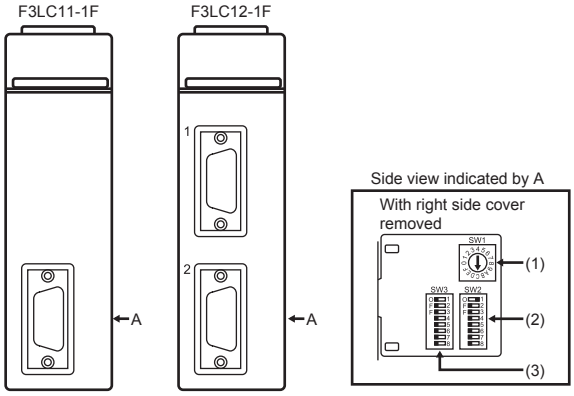

(1) Transmission speed switch (SW1)

Set the same transmission speed of the GOT.

Setting*1	Transmission speed
4	4800bps
5	9600bps
7	19200bps
9	38400bps
A	57600bps
C	115200bps

*1 Only transmission speeds available on the GOT side are shown.

(2) Data format switch (SW2)

Set the character length, parity, stop bit and checksum consistent with the corresponding settings on the GOT side.

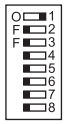

Switch No.	Description	Setting
1	Character length	ON (8bits), OFF (7bits)
2	Parity	ON (done), OFF (none)
3		ON (even), OFF (odd)
4	Stop bit	ON (2bits), OFF (1bit)
5	Checksum	ON (done), OFF (none)
6	End character specification	OFF (none)
7	Protect function	OFF (none)
8	Security function	OFF (none)

(3) Module function switch (SW3)

Switch No.	Description	Setting
1 to 6	User setting inhibited	OFF
7	Modem compatibility	OFF (not compatible)
8	External modem	OFF (none)

50.2.10 Connecting to PC link module (LC01-0N, LC02-0N)

■ Switch setting on the PC link module

Set the switches accordingly.

POINT

Switch setting

Set the switches before mounting the Ethernet Interface Module on the base unit.

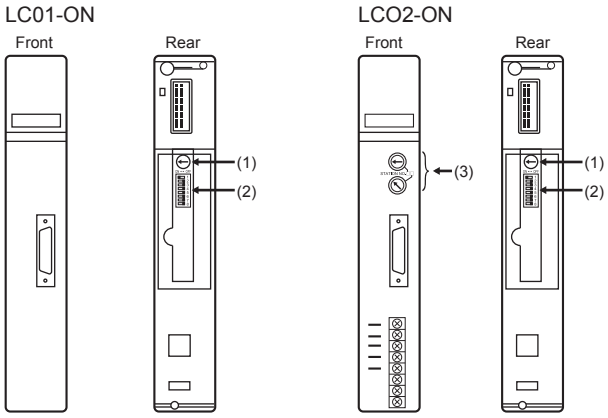

(1) Transmission speed setting switch

Set the same transmission speed of the GOT.

Setting*1	Transmission speed
4	4800bps
5	9600bps
6	19200bps

*1 Only transmission speeds available on the GOT side are shown.

(2) Data format setting switch

Set the data length, parity, stop bit and checksum consistent with the corresponding settings on the GOT side.

Switch No.	Description	Setting
1	Data bit	ON (8bits), OFF (7bits)
2	Parity	ON (done), OFF (none)
3		ON (even), OFF (odd)
4	Stop bit	ON (2bits), OFF (1bit)
5	Checksum	ON (done), OFF (none)
6	End character specification	OFF (none)
7	Protect function	OFF (none)
8	-	OFF

(3) Station No. switch (LC02-0N only)

Rotary switch	Description	Setting	
		RS-232 communication	RS-422 communication
1)	Station No. (10's digit)	0	0
2)	Station No. (1's digit)	1	2

50.2.11 Connecting to STARDOM

Make the communication settings as shown below. For details of the communication settings, refer to the following manual.

Peripheral Software Manual for YOKOGAWA PLC

POINT

Connection between STARDOM and the PC for communication settings

For the communication settings of STARDOM, STARDOM and the PC for communication settings must be connected to Ethernet using the Resource Configurator (peripheral software).

■ COM port setting

Make the settings on the FCX Maintenance Page for STARDOM.

1. Select [Reboot (Maintenance Mode)] on the Reboot screen of the FCX Maintenance Page to set the maintenance mode.
2. Set the COM1 port driver to be used. Execute [JEROS Basic Setting File] from the [Edit System Setting File] screen on the FCX Maintenance Page. Confirm that the line of [Com1SioDriver] is as follows.
   Com1SioDriver=DUONUS_SIO
3. Set the COM1 port to be used. Execute [COM1 Port Setting File] from the [Edit System Setting Files] screen on the FCX Maintenance Page. Make the settings as follows according to the communication specifications on the setting screen.
   Leave the settings as default if not listed on the communication setting items.
   (Communication setting items) ( ) in the table shows the names on the FCX Maintenance Page.

Item	Set value
Transmission speed (Baudrate)*1	4800bps, 9600bps, 19200bps, 38400bps, 57600bps, 115200bps
Data length (DataBitLength) *1	8bits, 7bits
Stop bit (StopBitLength)*1	1bit, 2bits
Parity bit (Parity)*1	none/odd/even

Baudrate	= *1
DataBitLength	= *1
StopBitLength	= *1
Parity	= *1
FifoMode	= YES
InitialDTRState	= ON
SendFlowControlMode	= CTS
ReceiveFlowControlMode	= DTR

*1 Adjust the settings with GOT communication settings.

50.2.5 ■ Communication detail settings

4. Select [Reboot (Online Mode)] on the [Reboot] screen of the FCX Maintenance Page to set the online mode.

■ Defining Logic POU

Define Logic POU using Logic Designer (peripheral software), and download the project to STARDOM.

1. Start Logic Designer and create a new project using a template.
   Use [STARDOM Serial Communication] template.
2. Insert FA-M3 Emulator Firmware Library to the new project.

   (1)The library path inserted in the procedures above is as follows.

   (2)Insert User Library to the new project.

   (3)Double-click the [SD_FCXPLCR_LIB] folder and double-click [SD_FCXPLCR_LIB.fwl] to select it.

   (4)The library path inserted in the procedures above is as follows.
   {Install Folder}\LogicDesigner\Mwt\Plc\Fw_lib\SD_FCXPLCR_LIB\SD_FCXPLCR_LIB.fwl
3. Insert FA-M3 Emulator User Library to the new project.

   (1)Right-click [Library] under the project tree in Logic Designer.

   (2)Right-click [Insert] and select [User Library].

   (3)Double-click [SD_CFAM3R_PF.mwt] to select it.

   (4)The library path inserted in the procedures above is as follows.
   {Install Folder}\LogicDesigner\Libraries\SD_CFAM3R_PF.mwt

4. Copy a sample project POU to the new project.

(1) Open C{Install Folder}\LogicDesigner\Projects\EXAMPLE_J.mwt.

(2) Right-click [FAM3_Emulator] in the Logic POU under the project tree in the Example_J project, and select [Copy].

(3) Right-click the [Logic POU] under the project tree in the created new project, and select [Paste].

(4) Double-click the [FAM3_Emulator*] file in the [FAM3_Emulator*] folder.

(5) For the following terminals, set as shown below.
REQ terminal: TRUE
TERMCHAR terminal: FALSE
PORT terminal: COM1
STATION terminal: STATION1

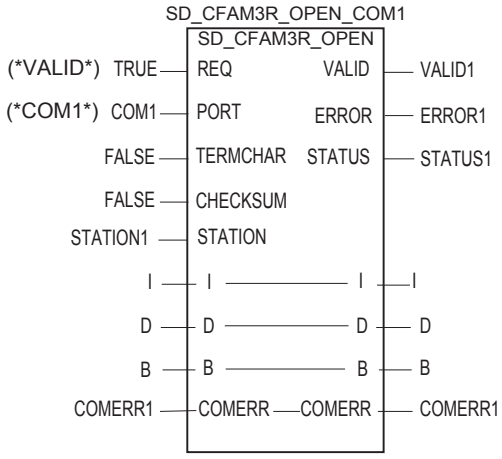

(Definition example of Logic POU)

5. Defining the instance
Instantiate Logic POU. Define an already defined instance to Task0.

(1) Right-click the [Physical hardware][Configuration:IPC_33/FCX01:FCX/Tasks/Task0:CYCLIC] and select [Insert] - [Program instance].

(2) Define the program instance name and select FAM3_Emulator for the program type.

6. Defining Target Setting
Define the IP address or host name of STARDOM for which the communication settings are made.
Double-click [Physical hardware] [Configuration:IPC_33/FCX01:FCX/Target Setting] and input the IP address or the host name.

7. Downloading the project

(1) Execute [Build] - [Make]. (Same as when pressing the function key F9)

(2) Download after confirming that the compile error does not occur. Select [Download] in the project control dialog displayed when [Online] - [Project control] is selected.

(3) When the download is completed, start STARDOM.

50.2.12 Precautions

■ Device range

When performing monitoring with the GOT connected to a YOKOGAWA PLC and setting devices for objects, use devices within the device range of the YOKOGAWA PLC.
When a device outside the range is set on an object, an indefinite value is displayed on the object.
(No error is displayed in the system alarm.)
For details on the device range of YOKOGAWA PLCs, refer to the following.

☞ 50.4 Device Range that Can Be Set

■ Connecting to STARDOM

(1) Redundant system
When STARDOM is configured with a redundant system, the connection is not supported.

(2) System alarm
The PLC error does not appear in the system alarm.

(3) GOT clock control
Since the STARDOM does not have a clock function, the settings of [time adjusting] or [time broad cast] by GOT clock control will be disabled.

50.3 Ethernet Connection

50.3.1 System configuration for connecting to FA-M3/M3V

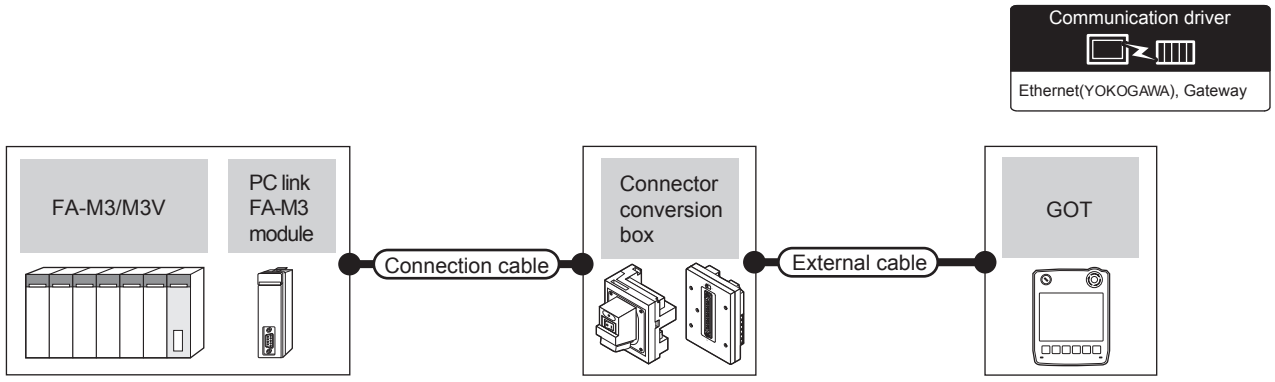

PLC		Connection cable*2	Connector conversion box	External cable*4	GOT model	Maximum segment length	Number of connectable equipment
Model	Ethernet interface module*1	Cable model					
F3SP05 F3SP08 F3FP36 F3SP21 F3SP25 F3SP35 F3SP28 F3SP38 F3SP53 F3SP58 F3SP59 F3SP76-7S	F3LE01-5T F3LE11-0T F3LE12-0T	• 10BASE-T Shielded twisted pair cable (STP) or Unshielded twisted pair cable (UTP): Category 3, 4, and 5 • 100BASE-TX Shielded twisted pair cable (STP): Category 5 and 5e	GT16H-CNB-42S	GT14H-C30-42P (3m) GT14H-C60-42P (6m) GT14H-C100-42P (10m)	GT14 Handy	100m*3	When PLC:GOT is N:1 The following shows the number of PLCs for 1 GOT TCP: 128 or less UDP: 128 or less When PLC:GOT is 1:N The following shows the number of GOTs for 1 PLC TCP: 8 or less UDP: 128 or less (recommended to 16 units or less)
			GT16H-CNB-37S	GT11H-C30-37P (3m) GT11H-C60-37P (6m) GT11H-C100-37P (10m)			
F3SP71-4S	F3LE11-0T		GT16H-CNB-42S	GT14H-C30-42P (3m) GT14H-C60-42P (6m) GT14H-C100-42P (10m)			
F3SP66 F3SP67 F3SP71-4N F3SP76-7S F3SP71-4S	-		GT16H-CNB-37S	GT11H-C30-37P (3m) GT11H-C60-37P (6m) GT11H-C100-37P (10m)			

*1 Product manufactured by Yokogawa Electric Corporation. For details of the product, contact Yokogawa Electric Corporation.

*2 The destination connected with the twisted pair cable varies with the configuration of the applicable Ethernet network system.
Connect to the Ethernet module, hub, transceiver or other system equipment corresponding to the applicable Ethernet network system.
Use cables, connectors, and hubs that meet the IEEE802.3 10BASE-T/100BASE-TX standard.
The use of shielded twisted pair cable (STP) is recommended in environments in which the performance against noise is required.

*3 A length between a hub and a node.
The maximum distance differs depending on the Ethernet device to be used.
The following shows the number of the connectable nodes when a repeater hub is used.
- 10BASE-T: Max. 4 nodes for a cascade connection (500m)
- 100BASE-TX: Max. 2 nodes for a cascade connection (205m)

When switching hubs are used, the cascade connection between the switching hubs has no logical limit for the number of cascades.
For the limit, contact the switching hub manufacturer.

*4 Use C or later version of GT11H-C□□-37P.

50.3.2 GOT side settings

■ Setting communication interface (Communication settings)

Set the channel of the connected equipment.

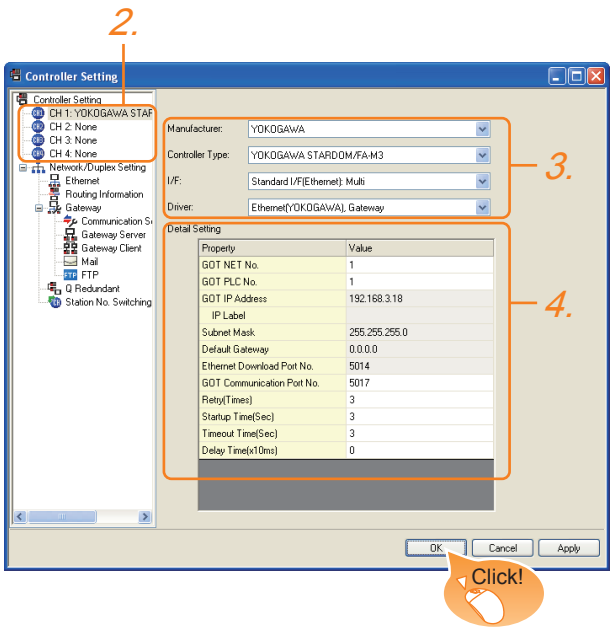

1. Select [Common] → [Controller Setting] from the menu.
2. The Controller Setting window is displayed. Select the channel to be used from the list menu.
3. Set the following items.
   - Manufacturer: YOKOGAWA
   - Controller Type: STARDOM/FA-M3
   - I/F: Interface to be used
   - Driver: Ethernet (YOKOGAWA), Gateway
4. The detailed setting is displayed after Manufacturer, Controller Type, I/F, and Driver are set.
   Make the settings according to the usage environment.
   50.3.2 ■ Communication detail settings

Click the OK button when settings are completed.

POINT

The settings of connecting equipment can be confirmed in [I/F Communication Setting].
For details, refer to the following.
18.1.2 I/F communication setting

■ Communication detail settings

Make the settings according to the usage environment.

Item	Description	Range
GOT NET No.	Set the network No. of the GOT. (Default: 1)	1 to 239
GOT PLC No.*2	Set the station No. of the GOT. (Default: 1)	1 to 64
GOT IP Address*1	Set the IP address of the GOT. (Default: 192.168.3.18)	0.0.0.0 to 255.255.255.255
Subnet Mask*1	Set the subnet mask for the sub network. (Only for connection via router) If the sub network is not used, the default value is set. (Default: 255.255.255.0)	0.0.0.0 to 255.255.255.255
Default Gateway*1	Set the router address of the default gateway where the GOT is connected. (Only for connection via router) (Default: 0.0.0.0)	0.0.0.0 to 255.255.255.255
Ethernet Download Port No.*1	Set the GOT port No. for Ethernet download. (Default: 5014)	1024 to 5010, 5014 to 65534 (Except for 5011, 5012, 5013, and 49153)
GOT Communication Port No.	Set the GOT port No. for the connection with the Ethernet module. (Default: 5017)	1024 to 5010, 5014 to 65534 (Except for 5011, 5012, 5013, and 49153)
Retry	Set the number of retries to be performed when a communication timeout occurs. When receiving no response after retries, the communication times out. (Default: 3times)	0 to 5times
Startup Time	Specify the time period from the GOT startup until GOT starts the communication with the PLC CPU. (Default: 3sec)	3 to 255 sec
Timeout Time	Set the time period for a communication to time out. (Default: 3sec)	3 to 90sec
Delay Time	Set the delay time for reducing the load of the network/destination PLC. (Default: 0ms)	0 to 10000 (× 10 ms)

*1 Click the Setting button and perform the setting in the [GOT IP Address Setting] screen.

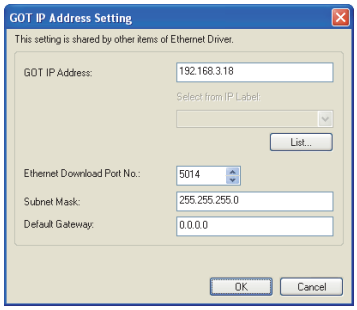

*2 Each of [GOT PLC No.] set in the communication detail setting and [PLC No.] set in the Ethernet setting must be set to different station numbers.
50.3.2 ■ Ethernet setting

■ Ethernet setting

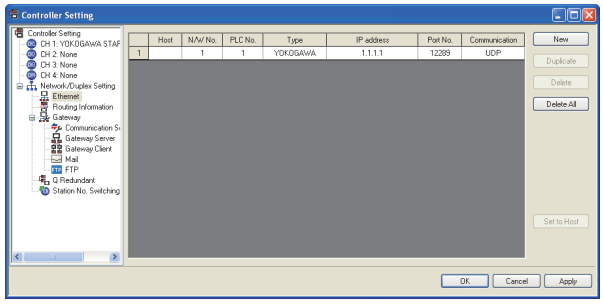

Item	Description	Set value
Host	The host is displayed. (The host is indicated with an asterisk (*).)	-
N/W No.	Set the network No. of the connected Ethernet module. (Default: blank)	1 to 239
PLC No.*3	Set the station No. of the connected Ethernet module. (Default: blank)	1 to 64
Controller Type	YOKOGAWA (fixed)	YOKOGAWA (fixed)
IP Address*1	Set the IP address of the connected Ethernet module. (Default: blank)	PLC side IP address
Port No.*2	Set the port No. of the connected Ethernet module. (Default: 12289)	12289, 12291
Communication*1	Select a communication protocol. (Default: UDP)	UDP, TCP

*1 Set the same IP address and communication format as those of the PLC side.
*2 Set the port No. of the host link service used on the PLC side.
*3 Each of [GOT PLC No.] set in the communication detail setting and [PLC No.] set in the Ethernet setting must be set to different station numbers.

50.3.2 ■ Communication detail settings

POINT

(1) Communication interface setting by Utility
The communication interface setting can be changed on the Utility's [Communication setting] after writing [Communication Settings] of project data.
For details on the Utility, refer to the following manual.

GT☐ User's Manual

(2) Precedence in communication settings
When settings are made by GT Designer3 or the Utility, the latest setting is effective.

50.3.3 PLC side setting

POINT

YOKOGAWA PLC
For details of YOKOGAWA PLCs, refer to the following manuals.

YOKOGAWA PLC user's Manual

Model		Refer to
Ethernet interface module	F3LE01-5T	50.3.4
	F3LE11-0T	
	F3LE12-0T	50.3.5
F3SP66 (built-in Ethernet interface) F3SP67 (built-in Ethernet interface) F3SP71-4N (built-in Ethernet interface)		50.3.6

50.3.4 Connecting to Ethernet interface module (F3LE01-5T, F3LE11-0T)

■ Switch settings of Ethernet Interface Module

Set the switches accordingly.

POINT

Switch setting
Set the switches before mounting the Ethernet interface module on the base unit.

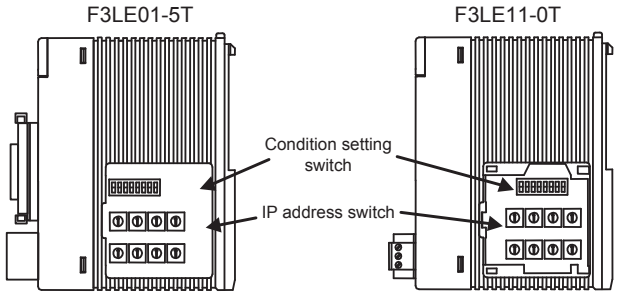

Right side view without the cover

(1) IP address switch
Set the IP address with eight Hex rotary switches on the side of the base unit.

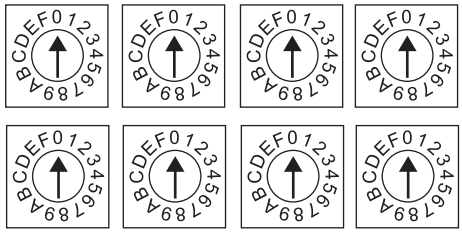

Hexadecimal	C0	A8	FA	D2
	↓	↓	↑	↑
Decimal	192	168	250	210

(2) Condition setting switch

Set the data format, write protection, line processing at TCP timeout error or operation mode with the DIP switch on the side of the base unit.

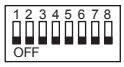

Switch No.	Description	Set value
1	Data code	OFF (ASCII)
2	Write protect	OFF (not protect)
3	Reserved	ON (not available), OFF (always)
4		
5		
6		
7	Line processing on TCP timeout*1	OFF (close the line)
8	Operation mode	OFF (normal operation)

*1 Applicable to only F3LE01-5T.

50.3.5 Connecting to Ethernet interface module (F3LE12-0T)

■ Switch settings of Ethernet Interface Module

Set the switches accordingly.

POINT

Switch setting

Set the switches before mounting Ethernet Interface Module on the base unit.

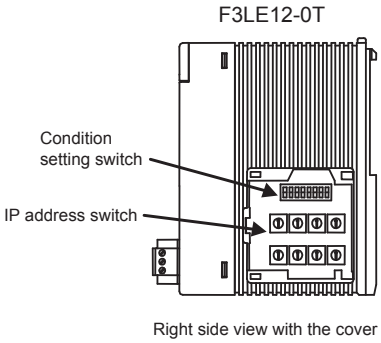

Right side view with the cover

(1) IP address switch

Set the IP address with eight Hex rotary switches on the side of the base unit.

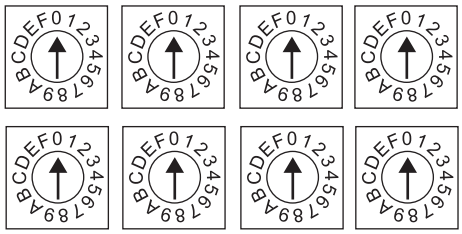

Hexadecimal	C0	A8	FA	D2
	↑	↑	↑	↑
Decimal	192	168	250	210

(2) Condition setting switch

Set the data format, write protection, or operation mode with the DIP switch on the side of the base unit.

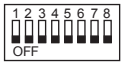

Switch No.	Description	Set value
1	Data code	OFF (ASCII)
2	Write protect	OFF (not protect)
3	Reserved	ON (not available), OFF (always)
4		
5		
6		
7		
8	Operation mode	OFF (normal operation)

50.3.6 Connecting to F3SP66, F3SP67, F3SP71-4N (Built-In Ethernet Interface)

■ Project setting/Configuration setting

Set the setting with a software for programming apparatus.

Item	Set value	Description
IP Address*1	0.0.0.0 to 255.255.255.255	Set the IP address of the connected Ethernet module.
Host link service A protocol*2 Port No.: 12289	0 = TCP/IP*1 1 = UDP/IP*1	Select the protocol to be used in the port A of the host link service via Ethernet.
Host link service A protocol command data type*2 Port No.: 12289	0=ASCII format	Select the command data type to be used in the port A of the host link service via Ethernet.
Host link service B protocol*2 Port No.: 12291	0 = TCP/IP*1 1 = UDP/IP*1	Select the protocol to be used in the port B of the host link service via Ethernet.
Host link service B protocol command data type*2 Port No.: 12291	0=ASCII format	Select the command data type to be used in the port B of the host link service via Ethernet.
Write protect*3	0 = Not protected 1 = Protected	Disable the write command to this module by the host link service via Ethernet.

*1 Adjust the settings with GOT settings.
50.3.2 ■ Ethernet setting

*2 For the port No. set in the GOT, set the port No. of the host link service to be used.
50.3.2 ■ Ethernet setting

*3 Set as necessary.

50.3.7 Precautions

■ Device range

When performing monitoring with the GOT connected to a YOKOGAWA PLC and setting devices for objects, use devices within the device range of the YOKOGAWA PLC.
When a device outside the range is set on an object, an indefinite value is displayed on the object.
(No error is displayed in the system alarm.)
For details on the device range of YOKOGAWA PLCs, refer to the following.
50.4 Device Range that Can Be Set

■ When setting IP address

Do not use "0" and "255" at the end of an IP address. (Numbers of *.*.*.0 and *.*.*.255 are used by the system)
The GOT may not monitor the controller correctly with the above numbers.
Consult with the administrator of the network before setting an IP address to the GOT and controller.

■ When connecting to multiple GOTs

(1) Setting PLC No.
When connecting two or more GOTs in the Ethernet network, set each [PLC No.] to the GOT.
50.3.2 ■ Ethernet setting

(2) Setting IP address
Do not use the IP address "192.168.0.18" when using multiple GOTs.
A communication error may occur on the GOT with the IP address.

■ When connecting to the multiple network equipment (including GOT) in a segment

By increasing the network load, the transmission speed between the GOT and PLC may be reduced.
The following actions may improve the communication performance.

- Using a switching hub
- More high speed by 100BASE-TX (100Mbps)
- Reduction of the monitoring points on GOT

50.4 Device Range that Can Be Set

For details on the device range of controllers that can be used on GT14 Handy, refer to the following manuals.

☞ GT Designer3 Version1 Screen Design Manual (Fundamentals)

☞ GOT1000 Series Connection Manual (Non-Mitsubishi Products 2) for GT Works3

51. CONNECTION TO YOKOGAWA TEMPERATURE CONTROLLER

51.1 Connectable Model List

The following table shows the connectable models.

Series	Model	Clock	Communication type	GT14 Handy	Refer to
GREEN	UT320	×	RS-232 RS-485	○	51.2.1
	UT321				
	UT350				
	UT351				
	UT420				
	UT450				
	UT520				
	UT550				
	UT551				
	UT750				
	UP350				
	UP351				
	UP550				
	UP750				
	UM330				
	UM331				
	UM350				
	UM351				
	US1000				
UT100	UT130	×	RS-232	○	51.2.2
	UT150				
	UT152				
	UT155				
	UP150				
UT2000	UT2400	×	RS-232 RS-485	○	51.2.3
	UT2800				
UTAdvanced	UT32A	×	RS-232 RS-485	○	51.2.4
	UT35A				
	UT55A				
	UT75A				
	UP35A				
	UP55A				
	UM33A				
	UT52A	×	RS-232	○	51.2.4

51.2 System Configuration

51.2.1 Connecting to GREEN Series

■ When using the RS232C/RS485 converter

Communication driver

YOKOGAWA GREEN/UT100/UT2000/UTAdvanced

(1) When using the connector conversion box

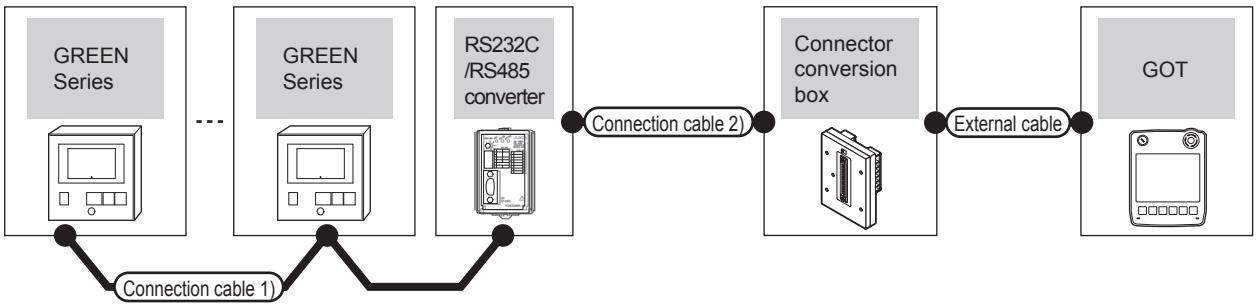

Temperature controller	Connection cable 1)		RS232C/RS485 Converter*1		Connection cable 2)	Connector conversion box	External cable	GOT model	Total distance *4	Number of connectable equipment
Model	Cable model Connection diagram number	Max. distance	Model	Communication type	Cable model Connection diagram number					
UT320 UT321 UT350 UT351 UT420 UT450 UT520 UT550 UT551 UT750*2	User preparing RS485 connection diagram 1) (4-wire type)	1200m	ML2-□	RS-232	GT09-C30R20304-9S(3m) or User preparing RS232 connection diagram 1)	GT11H-CNB-37S	GT11H-C30-37P (3m)	GT14 Handy	6m	Up to 31 temperature controllers for 1 GOT
UP350 UP351 UP550 UP750*2 UM330 UM331 UM350 UM351 US1000	User preparing RS485 connection diagram 5) (2-wire type)	1200m	ML2-□	RS-232						
UP750*3 UT750*3	User preparing RS485 connection diagram 6) (2-wire type)	1200m	ML2-□	RS-232	GT09-C30R20304-9S(3m) or User preparing RS232 connection diagram 1)			GT14 Handy	6m	

*1 Product manufactured by Yokogawa Electric Corporation. For details of the product, contact Yokogawa Electric Corporation.
*2 Connect the connection cable 1) to the standard RS-485 communication interface.
*3 Connect the connection cable 1) to the high performance RS-485 communication interface.
*4 The distance from the GOT to the interface converter (Connection cable 2) + External cable)

(2) When using the external cable (GT11H-C□□□-37P)

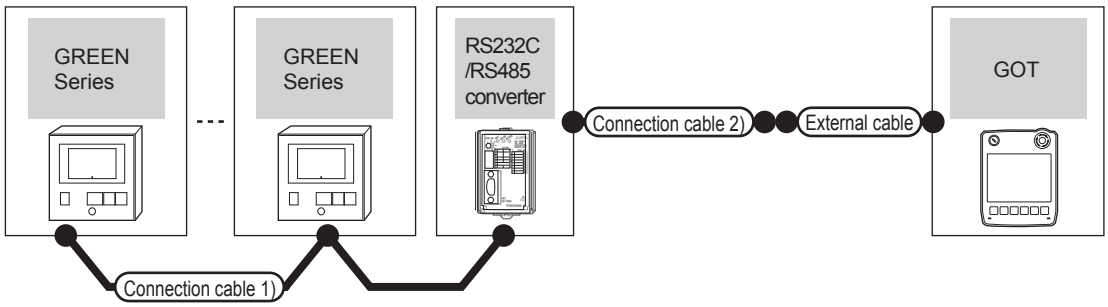

Temperature controller	Connection cable 1)		RS232C/RS485 Converter*1		Connection cable 2)	External cable	GOT model	Total distance *4	Number of connectable equipment
Model	Cable model Connection diagram number	Max. distance	Model	Communication type	Cable model Connection diagram number				
UT320 UT321 UT350 UT351 UT420 UT450 UT520 UT550 UT551 UT750*2	User preparing RS485 connection diagram 1) (4-wire type)	1200m	ML2-□	RS-232	User preparing RS232 connection diagram 2)	GT11H-C30-37P (3m)	GT14 Handy	6m	Up to 31 temperature controllers for 1 GOT
UP350 UP351 UP550 UP750*2 UM330 UM331 UM350 UM351 US1000	User preparing RS485 connection diagram 5) (2-wire type)	1200m	ML2-□	RS-232					
UP750*3 UT750*3	User preparing RS485 connection diagram 6) (2-wire type)	1200m	ML2-□	RS-232	User preparing RS232 connection diagram 2)	GT11H-C30-37P (3m)	GT14 Handy	6m	

*1 Product manufactured by Yokogawa Electric Corporation. For details of the product, contact Yokogawa Electric Corporation.
*2 Connect the connection cable 1) to the standard RS-485 communication interface.
*3 Connect the connection cable 1) to the high performance RS-485 communication interface.
*4 The distance from the GOT to the interface converter (Connection cable 2) + External cable)

(3) When using the external cable (GT11H-C□□□)

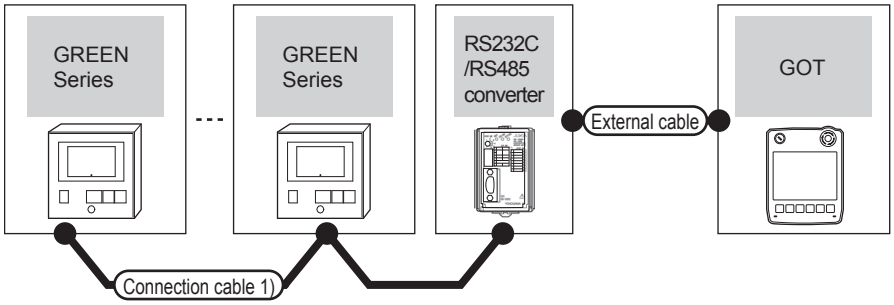

Temperature controller	Connection cable 1)		RS232C/RS485 Converter*1		External cable	GOT model	Total distance *4	Number of connectable equipment
Model	Cable model Connection diagram number	Max. distance	Model	Communication type				
UT320 UT321 UT350 UT351 UT420 UT450 UT520 UT550 UT551 UT750*2	User preparing RS485 connection diagram 1) (4-wire type)	1200m	ML2-□	RS-232	GT11H-C30(3m) GT11H-C60(6m) User preparing RS232 connection diagram 3)	GT14 Handy	6m	Up to 31 temperature controllers for 1 GOT
UP350 UP351 UP550 UP750*2 UM330 UM331 UM350 UM351 US1000	User preparing RS485 connection diagram 5) (2-wire type)	1200m	ML2-□	RS-232				
UP750*3 UT750*3	User preparing RS485 connection diagram 6) (2-wire type)	1200m	ML2-□	RS-232	GT11H-C30(3m) GT11H-C60(6m) User preparing RS232 connection diagram 3)	GT14 Handy	6m	

*1 Product manufactured by Yokogawa Electric Corporation. For details of the product, contact Yokogawa Electric Corporation.
*2 Connect the connection cable 1) to the standard RS-485 communication interface.
*3 Connect the connection cable 1) to the high performance RS-485 communication interface.
*4 The distance from the GOT to the interface converter (External cable)

■ When connecting directly

(1) When using the connector conversion box

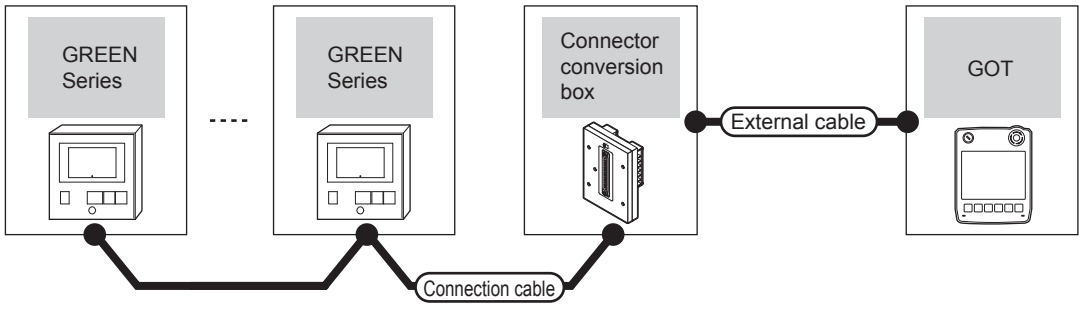

Temperature controller		Connection cable	Connector conversion box	External cable	GOT model	Total distance	Number of connectable equipment
Model	Communication type	Cable model Connection diagram number					
UT320 UT321 UT350 UT351 UT420 UT450 UT520 UT550 UT551 UT750*1 UP350 UP351 UP550 UP750*1 UM330 UM331 UM350 UM351 US100	RS-485	GT09-C30R40303-6T(3m) GT09-C100R40303-6T(10m) or User preparing RS485 connection diagram 2) (4-wire type)	GT11H-CNB-37S	GT11H-C30-37P(3m) GT11H-C60-37P(6m) GT11H-C100-37P(10m)	GT14 Handy	13m	Up to 10 temperature controllers for 1 GOT

*1 Connect the connection cable to the standard RS-485 communication interface.

(2) When using the external cable (GT11H-C□□□-37P)

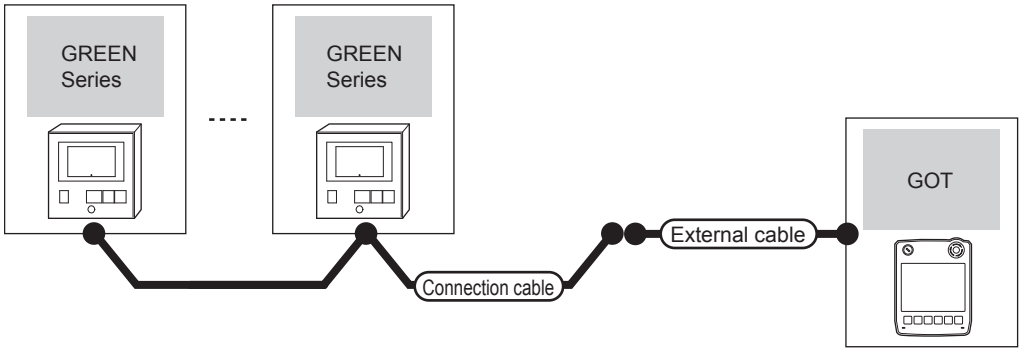

Temperature controller		Connection cable	External cable	GOT model	Total distance	Number of connectable equipment
Model	Communication type	Cable model Connection diagram number				
UT320 UT321 UT350 UT351 UT420 UT450 UT520 UT550 UT551 UT750*1 UP350 UP351 UP550 UP750*1 UM330 UM331 UM350 UM351 US100	RS-485	User preparing RS485 connection diagram 3) (4-wire type)	GT11H-C30-37P(3m) GT11H-C60-37P(6m) GT11H-C100-37P(10m)	GT14 Handy	13m	Up to 10 temperature controllers for 1 GOT

*1 Connect the connection cable to the standard RS-485 communication interface.

(3) When using the external cable (GT11H-C□□□)

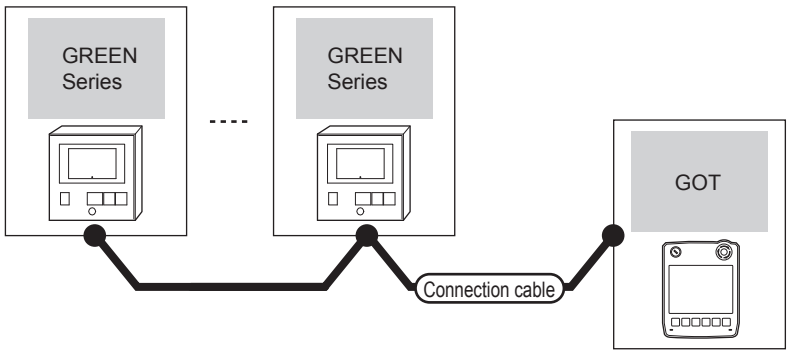

Temperature controller		External cable	GOT model	Total distance	Number of connectable equipment
Model	Communication type				
UT320 UT321 UT350 UT351 UT420 UT450 UT520 UT550 UT551 UT750*1 UP350 UP351 UP550 UP750*1 UM330 UM331 UM350 UM351 US100	RS-485	GT11H-C30(3m) GT11H-C60(6m) GT11H-C100(10m) User preparing RS485 connection diagram 4)	GT14 Handy	13m	Up to 10 temperature controllers for 1 GOT

*1 Connect the connection cable to the standard RS-485 communication interface.

51.2.2 Connecting to UT100

Communication driver

YOKOGAWA GREEN/UT100/UT2000/UTAdvanced

(1) When using the connector conversion box

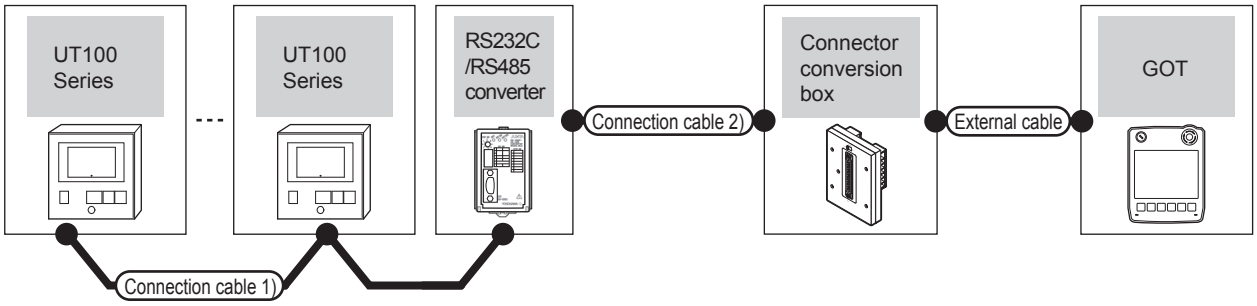

Temperature controller	Connection cable 1)		RS232C/RS485 converter*1		Connection cable 2)	Connector conversion box	External cable	GOT model	Total distance *2	Number of connectable equipment
Series	Cable model Connection diagram number	Max. distance	Model	Communication type	Cable model Connection diagram number					
UT100	User preparing RS485 connection diagram 6)	1200m	ML2-□	RS-232	User preparing RS232 connection diagram 1)	GT11H-CNB-37S	GT11H-C30-37P (3m)	GT14 Handy	6m	Up to 31 temperature controllers for 1 GOT

*1 Product manufactured by Yokogawa Electric Corporation. For details of the product, contact Yokogawa Electric Corporation.

*2 The distance from the GOT to the interface converter (Connection cable 2) + External cable)

(2) When using the external cable (GT11H-C□□□-37P)

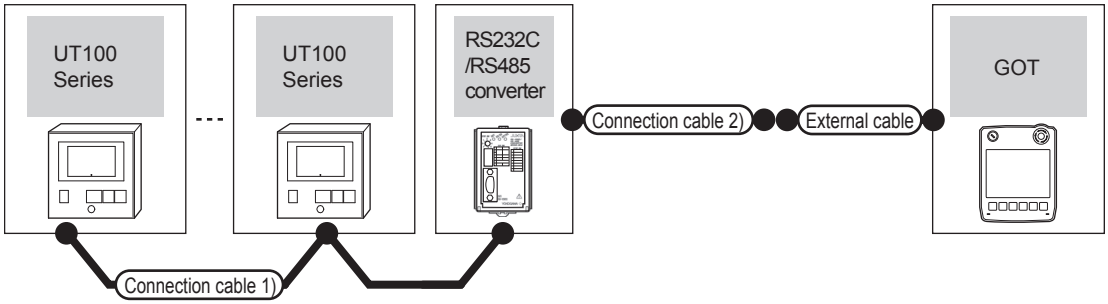

Temperature controller	Connection cable 1)		RS232C/RS485 converter*1		Connection cable 2)	External cable	GOT model	Total distance *2	Number of connectable equipment
Series	Cable model Connection diagram number	Max. distance	Model	Communication type	Cable model Connection diagram number				
UT100	User preparing RS485 connection diagram 6)	1200m	ML2-□	RS-232	User preparing RS232 connection diagram 2)	GT11H-C30-37P (3m)	GT14 Handy	6m	Up to 31 temperature controllers for 1 GOT

*1 Product manufactured by Yokogawa Electric Corporation. For details of the product, contact Yokogawa Electric Corporation.

*2 The distance from the GOT to the interface converter (Connection cable 2) + External cable)

(3) When using the external cable (GT11H-C□□□)

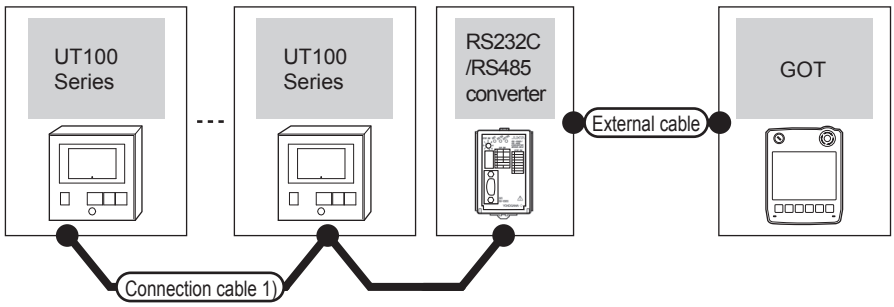

Temperature controller	Connection cable 1)		RS232C/RS485 converter*1		External cable	GOT model	Total distance *2	Number of connectable equipment
Series	Cable model Connection diagram number	Max. distance	Model	Communication type				
UT100	User preparing RS485 connection diagram 6)	1200m	ML2-□	RS-232	GT11H-C30(3m) GT11H-C60(6m) User preparing RS232 connection diagram 3)	GT14 Handy	6m	Up to 31 temperature controllers for 1 GOT

*1 Product manufactured by Yokogawa Electric Corporation. For details of the product, contact Yokogawa Electric Corporation.

*2 The distance from the GOT to the interface converter (External cable)

51.2.3 Connecting to UT2000

■ When using the RS232C/RS485 converter

Communication driver

YOKOGAWA GREEN/UT100/UT2000/UTAdvanced

(1) When using the connector conversion box

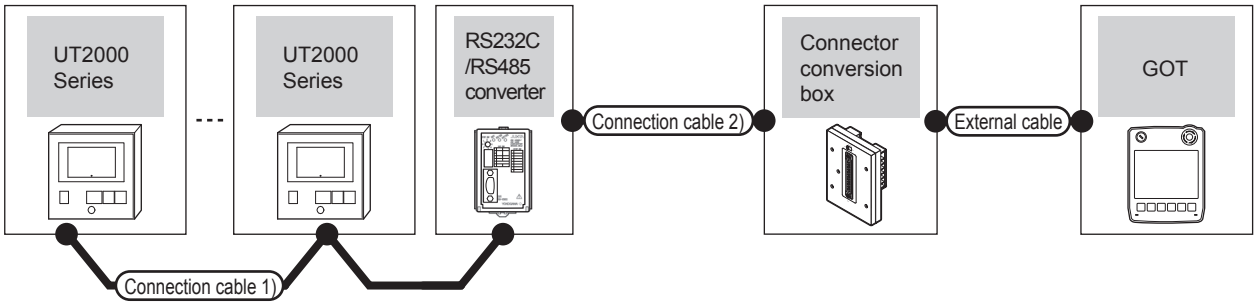

Temperature controller	Connection cable 1)		RS232C/RS485 Converter*1		Connection cable 2)	Connector conversion box	External cable	GOT model	Total distance *2	Number of connectable equipment
Series	Cable model Connection diagram number	Max. distance	Model	Communication type	Cable model Connection diagram number					
UT2000	User preparing RS485 connection diagram 7)	1200m	ML2-□	RS-232	GT09-C30R20304-9S(3m) or User preparing RS232 connection diagram 1)	GT11H-CNB-37S	GT11H-C30-37P (3m)	GT14 Handy	6m	Up to 16 temperature controllers for 1 GOT

*1 Product manufactured by Yokogawa Electric Corporation. For details of the product, contact Yokogawa Electric Corporation.

*2 The distance from the GOT to the interface converter (Connection cable 2) + External cable)

(2) When using the external cable (GT11H-C□□□-37P)

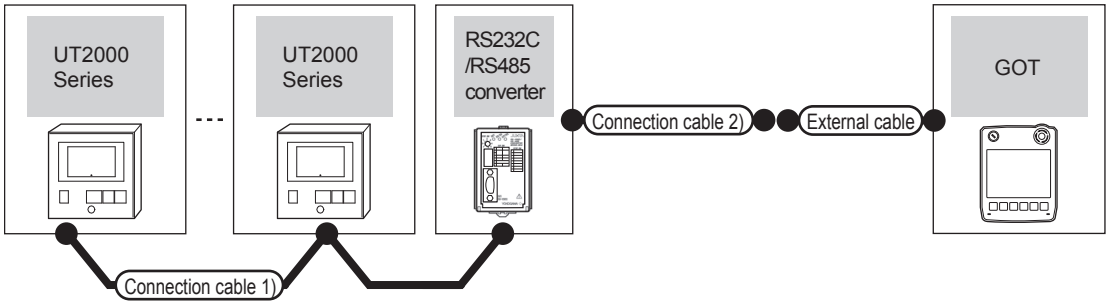

Temperature controller	Connection cable 1)		RS232C/RS485 Converter*1		Connection cable 2)	External cable	GOT model	Total distance *2	Number of connectable equipment
Series	Cable model Connection diagram number	Max. distance	Model	Communication type	Cable model Connection diagram number				
UT2000	User preparing RS485 connection diagram 7)	1200m	ML2-□	RS-232	User preparing RS232 connection diagram 2)	GT11H-C30-37P (3m)	GT14 Handy	6m	Up to 16 temperature controllers for 1 GOT

*1 Product manufactured by Yokogawa Electric Corporation. For details of the product, contact Yokogawa Electric Corporation.

*2 The distance from the GOT to the interface converter (Connection cable 2) + External cable)

(3) When using the external cable (GT11H-C□□□)

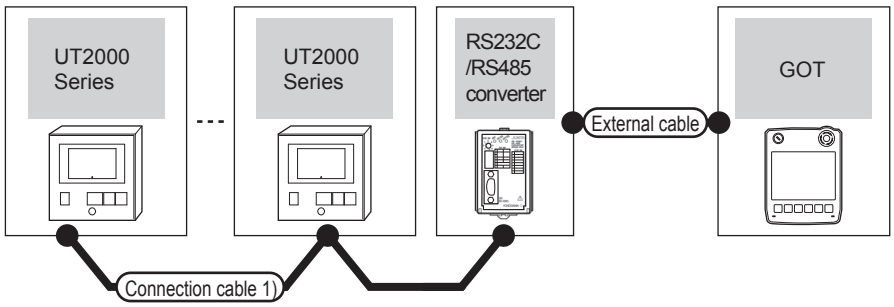

Temperature controller	Connection cable 1)		RS232C/RS485 Converter*1		External cable	GOT model	Total distance *2	Number of connectable equipment
Series	Cable model Connection diagram number	Max. distance	Model	Communication type				
UT2000	User preparing RS485 connection diagram 7)	1200m	ML2-□	RS-232	GT11H-C30(3m) GT11H-C60(6m) User preparing RS232 connection diagram 3)	GT14 Handy	6m	Up to 16 temperature controllers for 1 GOT

*1 Product manufactured by Yokogawa Electric Corporation. For details of the product, contact Yokogawa Electric Corporation.
*2 The distance from the GOT to the interface converter (External cable)

■ When connecting directly

(1) When using the connector conversion box

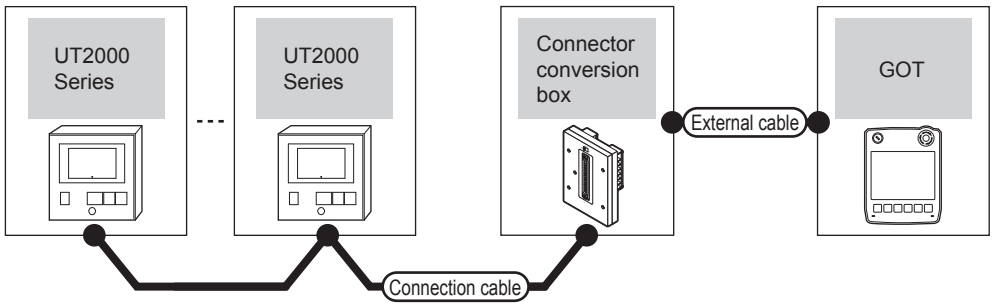

Temperature controller		Connection cable	Connector conversion box	External cable	GOT model	Total distance	Number of connectable equipment
Series	Communication type	Cable model Connection diagram number					
UT2000	RS-485	GT09-C30R40304-6T(3m) GT09-C100R40304-6T(10m) or User preparing RS485 connection diagram 8) (4-wire type)	GT11H-CNB-37S	GT11H-C30-37P(3m) GT11H-C60-37P(6m) GT11H-C100-37P(10m)	GT14 Handy	13m	Up to 10 temperature controllers for 1 GOT

(2) When using the external cable (GT11H-C□□□-37P)

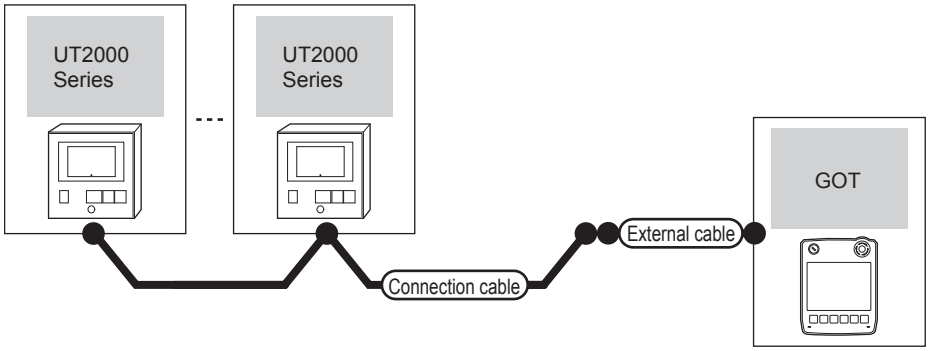

Temperature controller		Connection cable	External cable	GOT model	Total distance	Number of connectable equipment
Series	Communication type	Cable model Connection diagram number				
UT2000	RS-485	User preparing RS485 connection diagram 9) (4-wire type)	GT11H-C30-37P(3m) GT11H-C60-37P(6m) GT11H-C100-37P(10m)	GT14 Handy	13m	Up to 10 temperature controllers for 1 GOT

(3) When using the external cable (GT11H-C□□□)

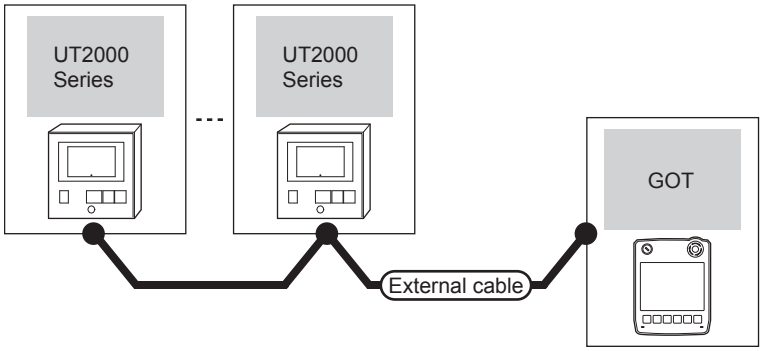

Temperature controller		External cable	GOT model	Total distance	Number of connectable equipment
Series	Communication type				
UT2000	RS-485	GT11H-C30(3m) GT11H-C60(6m) GT11H-C100(10m) User preparing RS485 connection diagram 10)	GT14 Handy	13m	Up to 10 temperature controllers for 1 GOT

51.2.4 Connecting to UTAdvanced Series

■ When using the RS232C/RS485 converter

Communication driver

YOKOGAWA GREEN/UT100/UT2000/UTAdvanced

(1) When using the connector conversion box

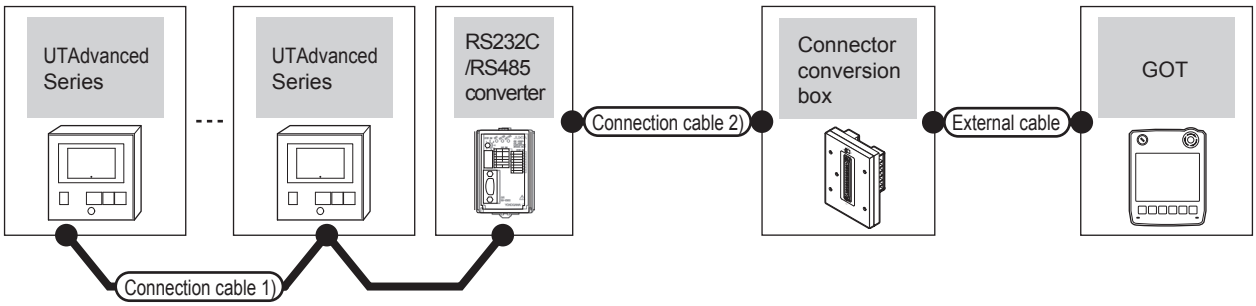

Temperature controller	Connection cable 1)		RS232C/RS485 Converter*1		Connection cable 2)	Connector conversion box	External cable	GOT model	Total distance *5	Number of connectable equipment
Model	Cable model Connection diagram number	Max. distance	Model	Communication type	Cable model Connection diagram number					
UT32A UT35A UT55A UT75A UP35A UP55A UM33A	User preparing RS485 connection diagram 1) (4-wire type)	1200m	ML2-☐	RS-232	GT09-C30R20304-9S(3m) or User preparing RS232 connection diagram 1)	GT11H-CNB-37S	GT11H-C30-37P (3m)	GT14 Handy	6m	Up to 31 temperature controllers for 1 GOT
	User preparing RS485 connection diagram 5) (2-wire type)	1200m	ML2-☐	RS-232						
UT52A UT55A*2 UP55A*3 UM33A*4	User preparing RS485 connection diagram 6) (2-wire type)	1200m	ML2-☐	RS-232	GT09-C30R20304-9S(3m) or User preparing RS232 connection diagram 1)			GT14 Handy	6m	

*1 Product manufactured by Yokogawa Electric Corporation. For details of the product, contact Yokogawa Electric Corporation.
*2 When the suffix code is "1" or "2" in type 2 with the optional suffix code "/LP"
*3 (For standard) when the suffix code is "2" in type 2, (for detail) when the optional suffix code is "/C4"
*4 When the suffix code is "1" in type 2 with the optional suffix code "/LP"
*5 The distance from the GOT to the interface converter (Connection cable 2) + External cable)

(2) When using the external cable (GT11H-C□□□-37P)

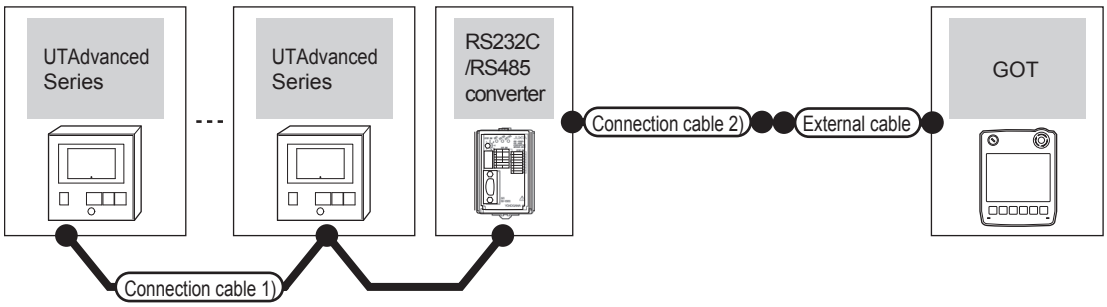

Temperature controller	Connection cable 1)		RS232C/RS485 Converter*1		Connection cable 2)	External cable	GOT model	Total distance *5	Number of connectable equipment
Model	Cable model Connection diagram number	Max. distance	Model	Communication type	Cable model Connection diagram number				
UT32A UT35A UT55A UT75A UP35A UP55A UM33A	User preparing RS485 connection diagram 1) (4-wire type)	1200m	ML2-□	RS-232	User preparing RS232 connection diagram 2)	GT11H-C30-37P (3m)	GT14 Handy	6m	Up to 31 temperature controllers for 1 GOT
	User preparing RS485 connection diagram 5) (2-wire type)	1200m	ML2-□	RS-232					
UT52A UT55A*2 UP55A*3 UM33A*4	User preparing RS485 connection diagram 6) (2-wire type)	1200m	ML2-□	RS-232	User preparing RS232 connection diagram 2)	GT11H-C30-37P(3m)	GT14 Handy	6m	

*1 Product manufactured by Yokogawa Electric Corporation. For details of the product, contact Yokogawa Electric Corporation.
*2 When the suffix code is "1" or "2" in type 2 with the optional suffix code "/LP"
*3 (For standard) when the suffix code is "2" in type 2, (for detail) when the optional suffix code is "/C4"
*4 When the suffix code is "1" in type 2 with the optional suffix code "/LP"
*5 The distance from the GOT to the interface converter (Connection cable 2) + External cable)

(3) When using the external cable (GT11H-C□□□)

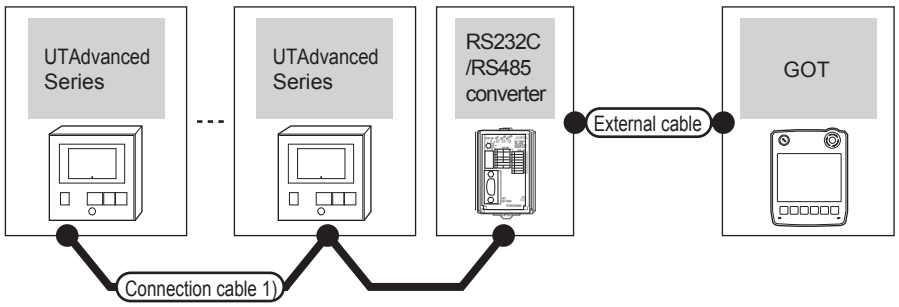

Temperature controller	Connection cable 1)		RS232C/RS485 Converter*1		External cable	GOT model	Total distance *5	Number of connectable equipment
Model	Cable model Connection diagram number	Max. distance	Model	Communication type				
UT32A UT35A UT55A UT75A UP35A UP55A UM33A	User preparing RS485 connection diagram 1) (4-wire type)	1200m	ML2-□	RS-232	GT11H-C30(3m) GT11H-C60(6m) User preparing RS232 connection diagram 3)	GT14 Handy	6m	Up to 31 temperature controllers for 1 GOT
	User preparing RS485 connection diagram 5) (2-wire type)	1200m	ML2-□	RS-232				
UT52A UT55A*2 UP55A*3 UM33A*4	User preparing RS485 connection diagram 6) (2-wire type)	1200m	ML2-□	RS-232	GT11H-C30(3m) GT11H-C60(6m) User preparing RS232 connection diagram 3)	GT14 Handy	6m	

*1 Product manufactured by Yokogawa Electric Corporation. For details of the product, contact Yokogawa Electric Corporation.
*2 When the suffix code is "1" or "2" in type 2 with the optional suffix code "/LP"
*3 (For standard) when the suffix code is "2" in type 2, (for detail) when the optional suffix code is "/C4"
*4 When the suffix code is "1" in type 2 with the optional suffix code "/LP"
*5 The distance from the GOT to the interface converter (External cable)

■ When connecting directly

(1) When using the connector conversion box

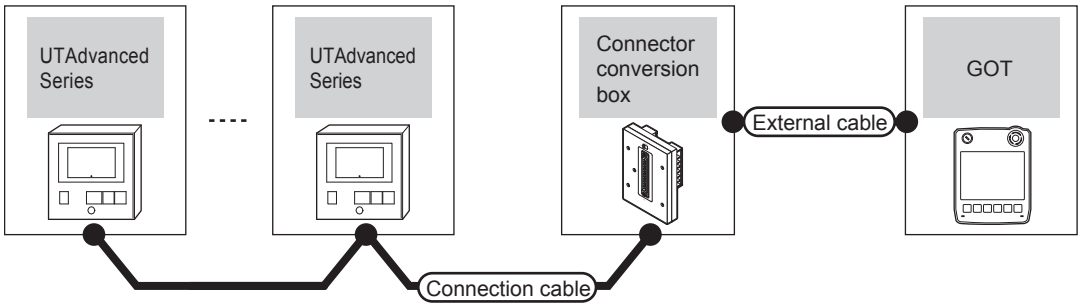

Temperature controller		Connection cable	Connector conversion box	External cable	GOT model	Total distance	Number of connectable equipment
Model	Communication type	Cable model Connection diagram number					
UT32A UT35A UT55A UT75A UP35A UP55A UM33A*1	RS-485	GT09-C30R40303-6T(3m) GT09-C100R40303-6T(10m) or User preparing RS485 connection diagram 2) (4-wire type)	GT11H-CNB-37S	GT11H-C30-37P(3m) GT11H-C60-37P(6m) GT11H-C100-37P(10m)	GT14 Handy	13m	Up to 10 temperature controllers for 1 GOT

*1 When the suffix code is "1" in type 2 without the optional suffix code "/LP"

(2) When using the external cable (GT11H-C□□□-37P)

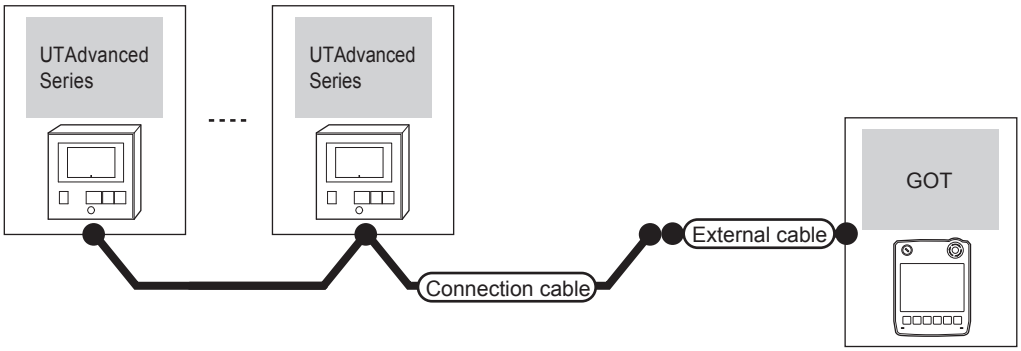

Temperature controller		Connection cable	External cable	GOT model	Total distance	Number of connectable equipment
Model	Communication type	Cable model Connection diagram number				
UT32A UT35A UT55A UT75A UP35A UP55A UM33A*1	RS-485	User preparing RS485 connection diagram 3) (4-wire type)	GT11H-C30-37P(3m) GT11H-C60-37P(6m) GT11H-C100-37P(10m)	GT14 Handy	13m	Up to 10 temperature controllers for 1 GOT

*1 When the suffix code is "1" in type 2 without the optional suffix code "/LP"

(3) When using the external cable (GT11H-C□□□)

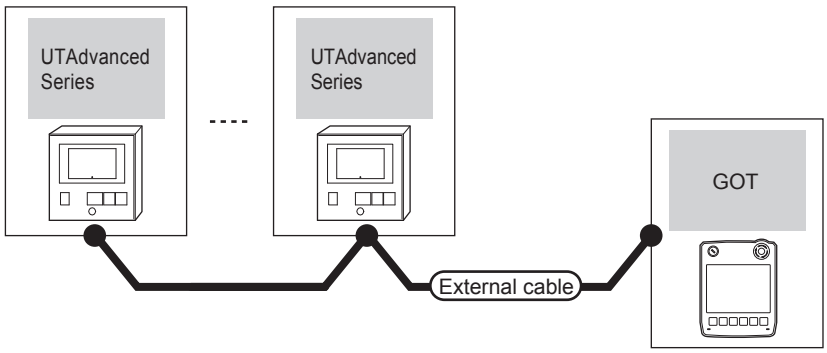

Temperature controller		External cable	GOT model	Total distance	Number of connectable equipment
Model	Communication type				
UT32A UT35A UT55A UT75A UP35A UP55A UM33A*1	RS-485	GT11H-C30(3m) GT11H-C60(6m) GT11H-C100(10m) User preparing RS485 connection diagram 4)	GT14 Handy	13m	Up to 10 temperature controllers for 1 GOT

*1 When the suffix code is "1" in type 2 without the optional suffix code "/LP"

51.3 Connection Diagram

The following diagram shows the connection between the GOT and the temperature controller.

51.3.1 RS-232 cable

■ Connection diagram

RS232 connection diagram 1)

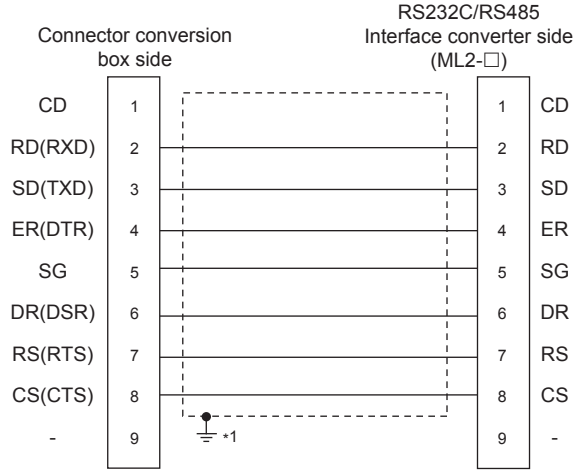

*1 Connect FG grounding to the appropriate part of a cable shield line.

RS232 connection diagram 2)

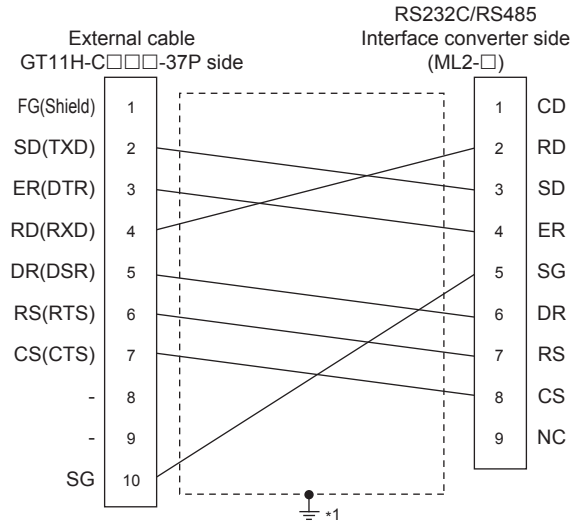

*1 Connect FG grounding to the appropriate part of a cable shield line.

RS232 connection diagram 3)

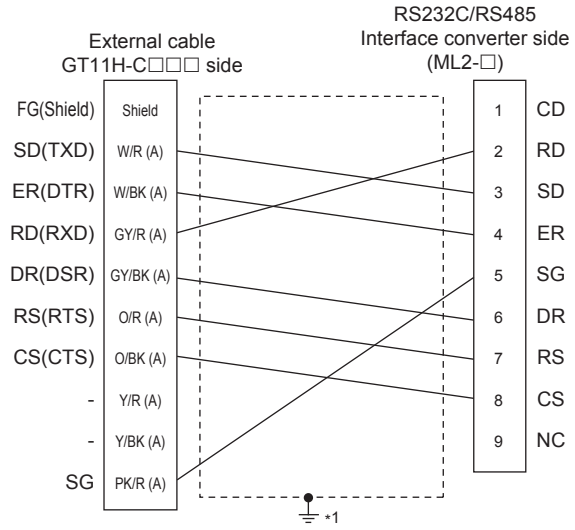

*1 Connect FG grounding to the appropriate part of a cable shield line.

■ Precautions when preparing a cable

(1) Cable length
The total distance (between the GOT and a controller) of RS-232 cable must be 6m or less.

(2) Connector conversion box side connector
For the connector conversion box side connector, refer to the following.
☞ 6.6 Connector Conversion Box

(3) External cable side connector
For the connector specifications of the external cable side, refer to the following.
☞ 8.2 External Cable, Relay Cable

(4) YOKOGAWA temperature controller side connector
Use the connector compatible with the YOKOGAWA temperature controller side.
For details, refer to the user's manual of the YOKOGAWA temperature controller.

51.3.2 RS-485 cable

■ Connection diagram

RS485 connection diagram 1)

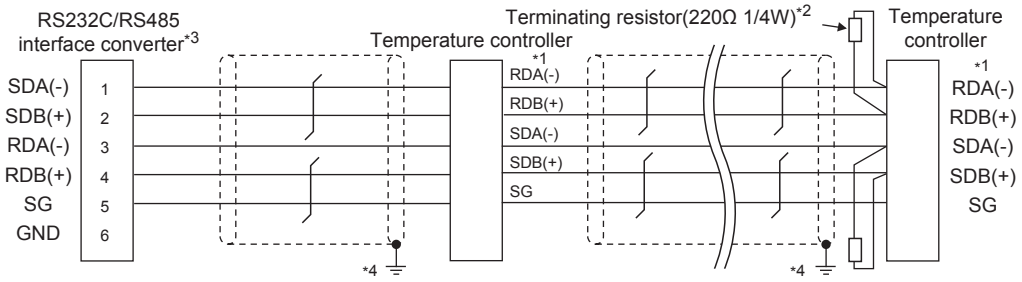

*1 Pin No. of temperature controller differs depending on the model. Refer to the following table.

Signal name	Model of temperature controller					
	GREEN Series		UTAdvanced series			
	UT/UP/UM	US	UT32A/UP35A/UM33A	UT35A/UT55A*5/UP55A*7	UT55A*6/UP55A*8	UT75A
	Pin No.	Pin No.	Pin No.	Pin No.	Pin No.	Pin No.
RDA(-)	26	24	305	411	505	5
RDB(+)	25	23	304	410	504	4
SDB(+)	23	21	301	407	501	1
SDA(-)	24	22	302	408	502	2
SG	27	25	303	409	503	3

*2 Terminating resistor should be provided for a temperature controller which will be a terminal.
*3 Turn on the terminating switch on the RS232C/RS485 converter at the end.
*4 Connect FG grounding to the appropriate part of a cable shield line.
*5 When the suffix code is "1" in type 3 except "1" or "6" in type 2
*6 When the suffix code is "1" or "2" in type 2 without the optional suffix code "/LP"
*7 (For standard) when the suffix code is "1" in type 3 except "3" in type 2, (for detail) when the optional suffix code is "/CH3"
*8 (For standard) when the suffix code is "2" in type 2, (for detail) when the optional suffix code is "/CH4"

RS485 connection diagram 2)

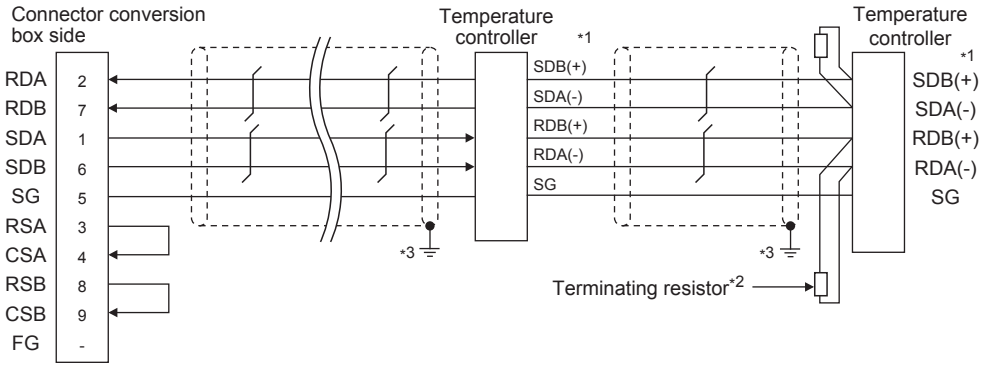

*1 Pin No. of temperature controller differs depending on the model. Refer to the following table.

Signal name	Model of temperature controller					
	GREEN Series		UTAdvanced series			
	UT/UP/UM	US	UT32A/UP35A/UM33A	UT35A/UT55A*4/UP55A*6	UT55A*5/UP55A*7	UT75A
	Pin No.	Pin No.	Pin No.	Pin No.	Pin No.	Pin No.
SDB(+)	23	21	301	407	501	1
SDA(-)	24	22	302	408	502	2
RDB(+)	25	23	304	410	504	4
RDA(-)	26	24	305	411	505	5
SG	27	25	303	409	503	3

*2 Terminating resistor (220Ω 1/4W) should be provided for a temperature controller which will be a terminal.
*3 Connect FG grounding to the appropriate part of a cable shield line.
*4 When the suffix code is "1" in type 3 except "1" or "6" in type 2
*5 When the suffix code is "1" or "2" in type 2 without the optional suffix code "/LP"
*6 (For standard) when the suffix code is "1" in type 3 except "3" in type 2, (for detail) when the optional suffix code is "/CH3"
*7 (For standard) when the suffix code is "2" in type 2, (for detail) when the optional suffix code is "/CH4"

RS485 connection diagram 3)

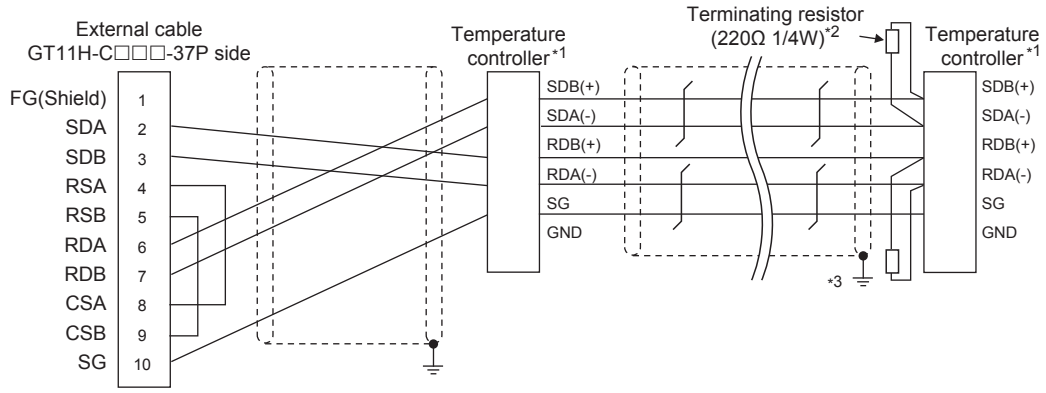

*1 Pin No. of temperature controller differs depending on the model. Refer to the following table.

Signal name	Model of temperature controller					
	GREEN Series		UTAdvanced series			
	UT/UP/UM	US	UT32A/UP35A/UM33A	UT35A/UT55A*4/UP55A*6	UT55A*5/UP55A*7	UT75A
	Pin No.	Pin No.	Pin No.	Pin No.	Pin No.	Pin No.
RDA(-)	26	24	305	411	505	5
RDB(+)	25	23	304	410	504	4
SDB(+)	23	21	301	407	501	1
SDA(-)	24	22	302	408	502	2
SG	27	25	303	409	503	3

*2 Terminating resistor should be provided for a temperature controller which will be a terminal.
*3 Connect FG grounding to the appropriate part of a cable shield line.
*4 When the suffix code is "1" in type 3 except "1" or "6" in type 2
*5 When the suffix code is "1" or "2" in type 2 without the optional suffix code "/LP"
*6 (For standard) when the suffix code is "1" in type 3 except "3" in type 2, (for detail) when the optional suffix code is "/CH3"
*7 (For standard) when the suffix code is "2" in type 2, (for detail) when the optional suffix code is "/CH4"

RS485 connection diagram 4)

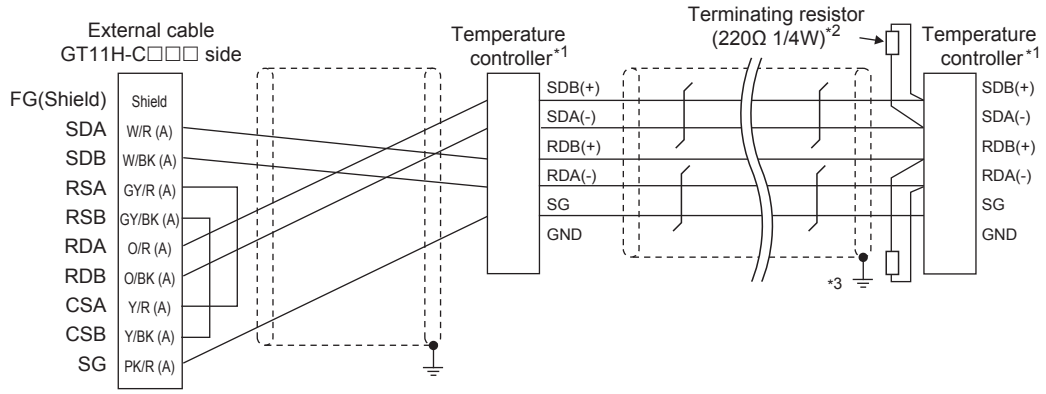

*1 Pin No. of temperature controller differs depending on the model. Refer to the following table.

Signal name	Model of temperature controller					
	GREEN Series		UTAdvanced series			
	UT/UP/UM	US	UT32A/UP35A/UM33A	UT35A/UT55A*4/UP55A*6	UT55A*5/UP55A*7	UT75A
	Pin No.	Pin No.	Pin No.	Pin No.	Pin No.	Pin No.
RDA(-)	26	24	305	411	505	5
RDB(+)	25	23	304	410	504	4
SDB(+)	23	21	301	407	501	1
SDA(-)	24	22	302	408	502	2
SG	27	25	303	409	503	3

*2 Terminating resistor should be provided for a temperature controller which will be a terminal.
*3 Connect FG grounding to the appropriate part of a cable shield line.
*4 When the suffix code is "1" in type 3 except "1" or "6" in type 2
*5 When the suffix code is "1" or "2" in type 2 without the optional suffix code "/LP"
*6 (For standard) when the suffix code is "1" in type 3 except "3" in type 2, (for detail) when the optional suffix code is "/CH3"
*7 (For standard) when the suffix code is "2" in type 2, (for detail) when the optional suffix code is "/CH4"

RS485 connection diagram 5)

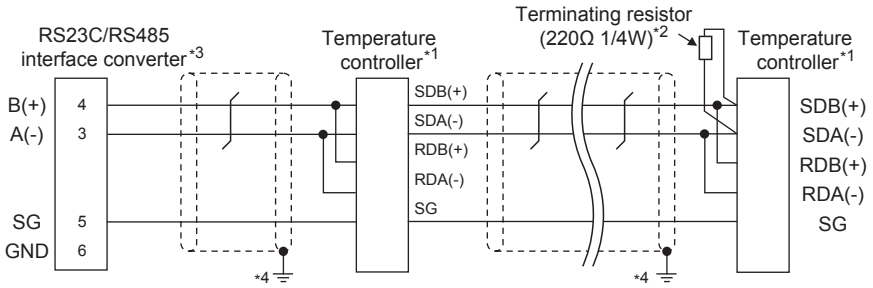

*1 Pin No. of temperature controller differs depending on the model. Refer to the following table.

Signal name	Model of temperature controller					
	GREEN Series		UTAdvanced series			
	UT/UP/UM	US	UT32A/UP35A/UM33A	UT35A/UT55A*5/UP55A*7	UT55A*6/UP55A*8	UT75A
	Pin No.	Pin No.	Pin No.	Pin No.	Pin No.	Pin No.
SDB(+)	23	21	301	407	501	1
SDA(-)	24	22	302	408	502	2
RDB(+)	25	23	304	410	504	4
RDA(-)	26	24	305	411	505	5
SG	27	25	303	409	503	3

*2 Terminating resistor should be provided for a temperature controller which will be a terminal.
*3 Turn on the terminating switch on the RS232C/RS485 converter at the end.
*4 Connect FG grounding to the appropriate part of a cable shield line.
*5 When the suffix code is "1" in type 3 except "1" or "6" in type 2
*6 When the suffix code is "1" or "2" in type 2 without the optional suffix code "/LP"
*7 (For standard) when the suffix code is "1" in type 3 except "3" in type 2, (for detail) when the optional suffix code is "/CH3"
*8 (For standard) when the suffix code is "2" in type 2, (for detail) when the optional suffix code is "/CH4"

RS485 connection diagram 6)

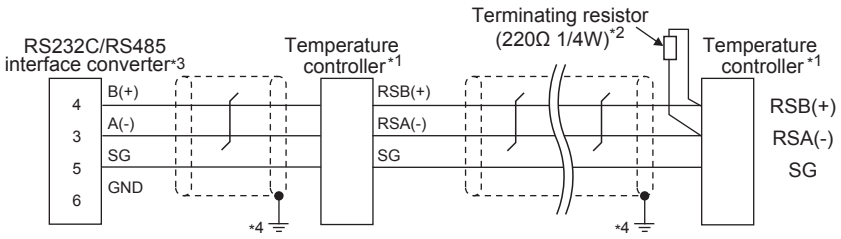

*1 Pin No. of temperature controller differs depending on the model. Refer to the following table.

Signal name	Model of temperature controller				
	GREEN Series	UT100 Series		UTAdvanced series	
	UT750/UP750	UT130/UT150/UP150	UT152/UT155	UT52A/UM33A	UT55A/UP55A
	Pin No.	Pin No.	Pin No.	Pin No.	Pin No.
RSB(+)	28	3	26	301	501
RSA(-)	29	4	27	302	502
SG	30	5	28	303	503

*2 Terminating resistor should be provided for a temperature controller which will be a terminal.
*3 Turn on the terminating switch on the RS232C/RS485 converter at the end.
*4 Connect FG grounding to the appropriate part of a cable shield line.

RS485 connection diagram 7)

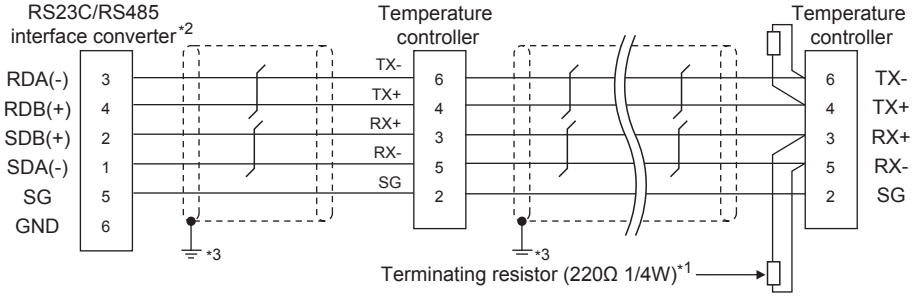

*1 Terminating resistor should be provided for a temperature controller which will be a terminal.
*2 Turn on the terminating switch on the RS232C/RS485 converter at the end.
*3 Connect FG grounding to the appropriate part of a cable shield line.

RS485 connection diagram 8)

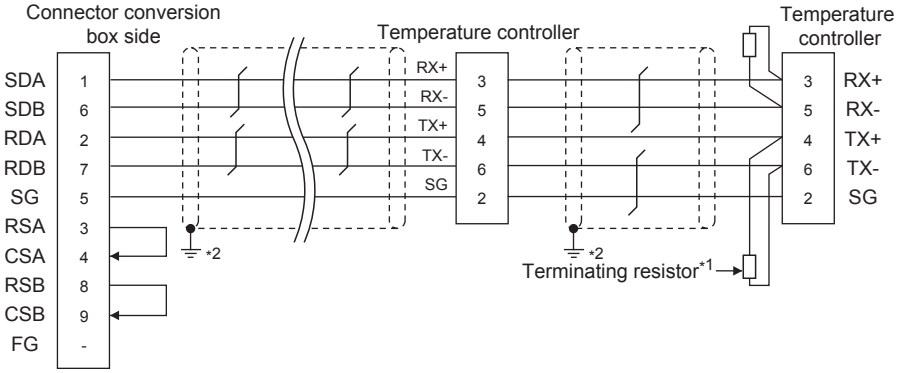

*1 Terminating resistor (100Ω 1/2W) should be provided for a temperature controller which will be a terminal.
*2 Connect FG grounding to the appropriate part of a cable shield line.

RS485 connection diagram 9)

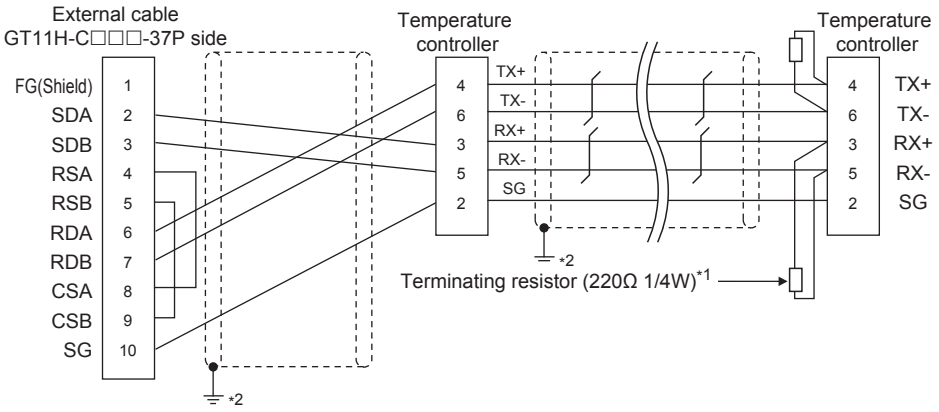

*1 Terminating resistor should be provided for a temperature controller which will be a terminal.
*2 Connect FG grounding to the appropriate part of a cable shield line.

RS485 connection diagram 10)

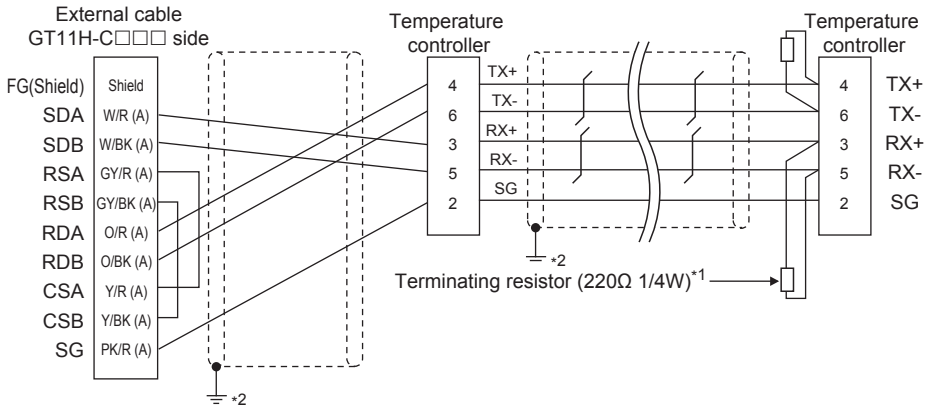

*1 Terminating resistor should be provided for a temperature controller which will be a terminal.
*2 Connect FG grounding to the appropriate part of a cable shield line.

■ Precautions when preparing a cable

(1) Cable length

(a) The length of the RS-485 cable used for connecting the temperature controller to the communication converter
The length of the RS-485 cable must be 1200m or less.

(b) The length of the RS-485 cable used for connecting the temperature controller to the GOT
The total distance (between GOT and controllers) of RS-485 cable must be 13m or less.

(2) Connector conversion box side connector
For the connector conversion box side connector, refer to the following.

☞ 6.6 Connector Conversion Box

(3) External cable side connector
For the connector specifications of the external cable side, refer to the following.

☞ 8.2 External Cable, Relay Cable

(4) YOKOGAWA temperature controller side connector
Use the connector compatible with the YOKOGAWA temperature controller side.
For details, refer to the user's manual of the YOKOGAWA temperature controller.

■ Connecting terminating resistors

(1) YOKOGAWA temperature controller side
When connecting a YOKOGAWA temperature controller to the GOT, a terminating resistor must be connected.

☞ 51.5 Temperature Controller Side Setting

51.4 GOT Side Settings

51.4.1 Setting communication interface (Communication settings)

Set the channel of the connected equipment.

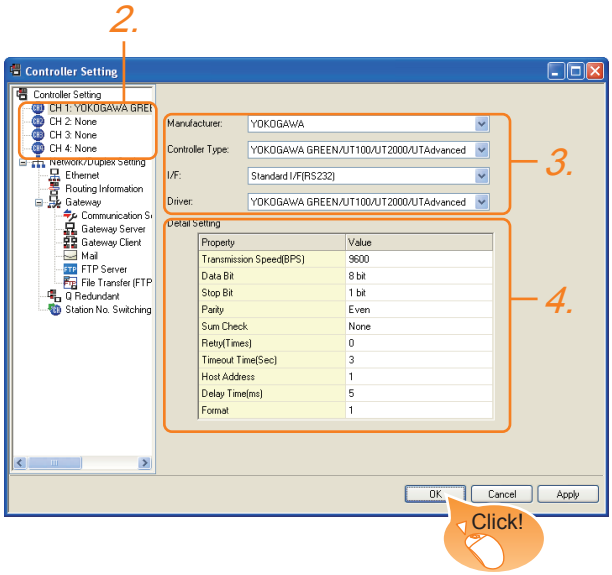

1. Select [Common] → [Controller Setting] from the menu.
2. The Controller Setting window is displayed. Select the channel to be used from the list menu.
3. Set the following items.
   - Manufacturer: YOKOGAWA
   - Controller type: YOKOGAWA GREEN/UT100/ UT2000/UTAdvanced
   - I/F: Interface to be used
   - Driver: YOKOGAWA GREEN/UT100/UT2000/ UTAdvanced
4. The detailed setting is displayed after Manufacturer, Controller Type, I/F, and Driver are set.
   Make the settings according to the usage environment.
   51.4.2 Communication detail settings

Click the OK button when settings are completed.

POINT

The settings of connecting equipment can be confirmed in [I/F Communication Setting].
For details, refer to the following.
18.1.2 I/F communication setting

51.4.2 Communication detail settings

Item	Description	Range
Transmission Speed	Set this item when change the transmission speed used for communication with the connected equipment. (Default: 9600bps)	4800bps, 9600bps, 19200bps, 38400bps, 57600bps, 115200bps
Data Bit	Set this item when change the data length used for communication with the connected equipment. (Default: 8bit)	7bit/8bit
Stop Bit	Specify the stop bit length for communications. (Default: 1bit)	1bit/2bits
Parity	Specify whether or not to perform a parity check, and how it is performed during communication. (Default: Even)	None Even Odd
Sum Check	Set whether or not to perform a sum check during communication. (Default: None)	Done, None
Retry	Set the number of retries to be performed when a communication error occurs. (Default: 0time)	0 to 5times
Timeout Time	Set the time period for a communication to time out. (Default: 3sec)	3 to 30sec
Host Address	Specify the host address (station No. of the GOT to which the temperature controller is connected) in the connected network. (Default: 1)	1 to 99
Delay Time	Set this item to adjust the transmission timing of the communication request from the GOT. (Default: 5ms)	0 to 300ms
Format	Select the communication format. (Default: 1) Format 1: Accessible to GREEN/UT100/UT2000/UT Advanced Series Format 2: Accessible to GREEN/UT2000/UT Advanced Series, Not accessible to UT100 Series.	1/2

POINT

(1) Format
- When connecting to UT100 Series, specify the format 1.
- When connecting to only GREEN/UT2000/ UTAdvanced Series, specifying the format 2 is recommended.

(2) Communication interface setting by Utility
The communication interface setting can be changed on the Utility's [Communication setting] after writing [Communication Settings] of project data.
For details on the Utility, refer to the following manual.
11. COMMUNICATION INTERFACE SETTING (COMMUNICATION SETTING)

(3) Precedence in communication settings
When settings are made by GT Designer3 or the Utility, the latest setting is effective.

51.5 Temperature Controller Side Setting

POINT

(1) YOKOGAWA temperature controller
For details of YOKOGAWA temperature controller, refer to the following manual.

☞ User's Manual of the YOKOGAWA temperature controller

(2) Interface converter
For details on communication settings of the RS232C/RS485 converter, refer to the following manual.

☞ User's Manual of RS232C/RS485 converter

Name	Series name/model name	Refer to
Temperature controller	GREEN	51.5.1
	UT100	51.5.2
	UT2000	51.5.3
	UTAdvanced	51.5.4
Interface converter	ML2-☐	51.5.5

51.5.1 Connecting to GREEN Series

■ Communication settings

Make the communication settings by operating the key of the temperature controller.

(1) For the UT☐/UP☐/UM☐/US100(except UT750, UP750)

Item	Set value
Transmission speed	9600bps (fixed)
Data bit*1	7bits, 8bits
Parity bit*1	Even, Odd, None
Stop bit*1	1bit, 2bits
Address*1*2	1 to 99
Protocol selection*1	0: PC link communication (without sum check) 1: PC link communication (with sum check)

*1 Adjust the settings with GOT settings.
*2 Avoid duplication of the address with any of the other units.

(2) For the UT750, UP750

Item		Set value
Transmission speed*1	RS-485 communication	9600bps (fixed)
	High performance RS-485 communication	9600bps, 19200bps, 38400bps
Data bit*1	7bits, 8bits	
Parity bit*1	Even, Odd, None	
Stop bit*1	1bit, 2bits	
Address*1*2	1 to 99	
Protocol selection*1	RS-485 communication	0: PC link communication (without sum check) 1: PC link communication (with sum check)
	High performance RS-485 communication	0: PC link communication (without sum check) 1: PC link communication (with sum check)

*1 Adjust the settings with GOT settings.
*2 Avoid duplication of the address with any of the other units.

51.5.2 Connecting to UT100 Series

■ Communication settings

Make the communication settings by operating the key of the temperature controller.

Item	Set value
Transmission speed	9600bps
Data bit*1	7bits, 8bits
Parity bit*1	Even, Odd, None
Stop bit*1	1bit, 2bits
Address*1*2	1 to 99
Protocol selection*1	0: PC link communication (without sum check) 1: PC link communication (with sum check)

*1 Adjust the settings with GOT settings.
*2 Avoid duplication of the address with any of the other units.

51.5.3 Connecting to UT2000 Series

■ Communication settings

Make the communication settings using setting switches.

Item	Set value
Transmission speed	9600bps
Data bit*1	8bits (Fixed)
Parity bit*1	Even, Odd, None
Stop bit*1	1bit (Fixed)
Station No.*1*2	1 to 16
Communication mode	PC link communication mode

*1 Adjust the settings with GOT settings.
*2 Avoid duplication of the station No. with any of the other units.

■ Settings by switch

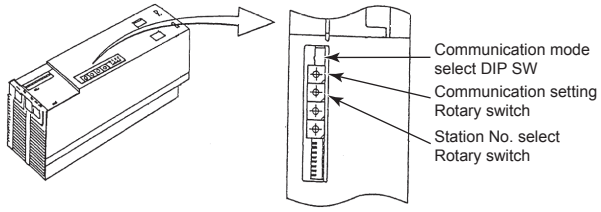

(1) Settings of the transmission speed and the parity
Make those settings by operating the communication setting Rotary switch.

Switch position	Transmission speed	Parity bit
0	9600bps	None
1		Odd
2		Even

(2) Communication mode settings
Make this setting by operating the communication mode select DIP SW.

Switch position	Communication mode
ON	PC link communication mode

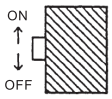

(3) A setting of the station No.
Make this setting by operating the station No. select Rotary switch.

Switch position	Station No.
0	1
1	2
2	3
3	4
4	5
5	6
6	7
7	8
8	9
9	10
A	11
B	12
C	13
D	14
E	15
F	16

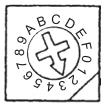

51.5.4 Connecting to UTAdvanced Series

■ Communication settings

Make the communication settings by operating the key of the temperature controller.

Item	Set value
Transmission speed*1	9600bps, 19200bps, 38400bps
Data bit*1	7bits, 8bits
Parity bit*1	Even, Odd, None
Stop bit*1	1bit, 2bits
Address*1*2	1 to 99
Minimum response time	0 to 10 (×10 ms)
Protocol selection*1	PCL(0): PC link communication (without sum check) PCLSM(1): PC link communication (with sum check)

*1 Adjust the settings with GOT settings.
*2 Avoid duplication of the address with any of the other units.

51.5.5 Connecting to converter (ML2-□)

■ Communication settings

Make the communication settings using a setting switch.

Item	Set value
Transmission speed*1	9600bps, 19200bps, 38400bps
Setting (2-wire/4-wire)*2	2-wire type or 4-wire type
Terminating resistor*2	Done, None
Echo back	OFF
RS-485 driver-active control	AUTO

*1 Adjust the settings with GOT settings.
*2 Refer to the following connection diagram for setting.
51.3.2 RS-485 cable

■ Settings by switch

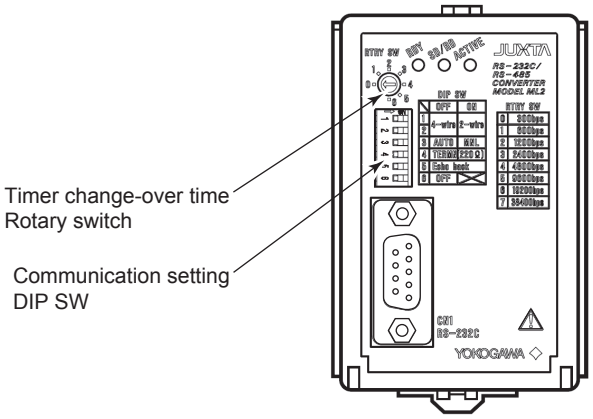

(1) Settings of the setting (2-wire/4-wire), the RS-485 driver-active control, the terminating resistor, the echo back
Make those settings by operating the communication setting DIP SW.

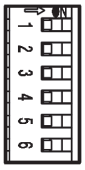

Setting item	Set value	Switch No.					
		1	2	3	4	5	6
Setting (2-wire/4-wire)	4-wire type	OFF	OFF				-
	2-wire	ON	ON				
RS-485 driver-active control	AUTO			OFF			
terminating resister	With				ON		
	Without				OFF		
Echo back	OFF					OFF	

(2) A setting of the transmission speed
Make this setting by operating the timer change-over time Rotary switch.

Switch position	Transmission speed
5	9600bps
6	19200bps
7	38400bps

51.5.6 Station number setting

Set each station number so that no station number overlaps.
The station number can be set without regard to the cable connection order. There is no problem even if station numbers are not consecutive.

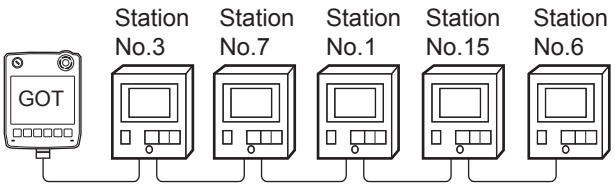

Examples of station number setting

(1) Direct specification
When setting the device, specify the station number of the temperature controller of which data is to be changed.

Specification range
1 to 99

(2) Indirect specification
When setting the device, indirectly specify the station number of the inverter of which data is to be changed using the 16-bit GOT internal data register (GD10 to GD25).
When specifying the station No. from 100 to 115 on GT Designer3, the value of GD10 to GD25 compatible to the station No. specification will be the station No. of the temperature controller.

Specification station NO.	Compatible device	Setting range
100	GD10	1 to 99 For the setting other than the above, an error (dedicated device is out of range) will occur.
101	GD11	
102	GD12	
103	GD13	
104	GD14	
105	GD15	
106	GD16	
107	GD17	
108	GD18	
109	GD19	
110	GD20	
111	GD21	
112	GD22	
113	GD23	
114	GD24	
115	GD25	

(3) All station specification
Target station differs depending on write-in operation or read-out operation.
- For write-in operation, all station will be a target. In the WORD BIT write-in operation, only the temperature controller whose station No. is the same as host address is applicable.
51.4.2 Communication detail settings
- In the read-out operation, only the indicating controller whose station No. is the same as host address is applicable.
For details of host address setting, refer to the following.
51.4.2 Communication detail settings

POINT

The all station specification can be set for the following temperature controllers only.
UT420, UT450, UT520, UT550, UT551, UT750, UP550, UP750,
US1000

51.6 Device Range that Can Be Set

For details on the device range of controllers that can be used on GT14 Handy, refer to the following manuals.

☞ GT Designer3 Version1 Screen Design Manual (Fundamentals)

☞ GOT1000 Series Connection Manual (Non-Mitsubishi Products 2) for GT Works3

51.7 Precautions

■ Station number settings of temperature controller

In the system configuration, the temperature controller with the station number set with the host address must be included. For details of host address setting, refer to the following.

☞ 51.4.2 Communication detail settings

■ GOT clock control

Since the temperature controller does not have a clock function, the settings of "time adjusting" or "time broad cast" by GOT clock function will be disabled.

■ Cutting the portion of multiple connection of the controller

By setting GOT internal device, GOT can cut the portion of multiple connection of the controller. For example, faulty station that has communication timeout can be cut from the system.
For details of the setting contents of GOT internal device, refer to the following manual.

☞ GT Designer3 Version1 Screen Design Manual

52. CONNECTION TO AZBIL CONTROL EQUIPMENT

52.1 Connectable Model List

The following table shows the connectable models.

Series	Model	Clock	Communication type	GT14 Handy	Refer to
DMC	DMC10	×	RS-232	○	52.2.1
	DMC50	×	RS-485	○	52.2.2
SDC	SDC15	×	RS-232	○	52.2.3
	SDC25				
	SDC26				
	SDC35				
	SDC36				
	SDC20	×	RS-232 RS-485	○	52.2.4
	SDC21				
	SDC30	×	RS-232 RS-485	○	52.2.5
	SDC31				
	SDC40A	×	RS-232 RS-485	○	52.2.6
	SDC40B				
	SDC40G				
	SDC45	×	RS-232	○	52.2.7
	SDC46				
CMS	CMS				
MQV	MQV				
MPC	MPC				
MVF	MVF				
RX	RX				
CMF	CMF015				
	CMF050	×	RS-232 RS-485	○	52.2.8
CML	CML				
PBZ	PBC201-VN2				
AUR	AUR350C				
	AUR450C				
CMC	CMC10B				
AHC2001	AHC2001	×	RS-232 RS-485	○	52.2.9

(Continued to next page)

Series	Model	Clock	Communication type	GT14 Handy	Refer to
NX	NX-D15	×	RS-232 RS-485 (MODBUS)	○	52.2.10
	NX-D25				
	NX-D35				
	NX-DX1				
	NX-DX2				
	NX-DY				
	NX-S01				
	NX-S11				
	NX-S12				
	NX-S21				
	NX-D15	×	Ethernet (MODBUS)	○	52.2.10
	NX-D25				
	NX-D35				
	NX-DX1				
	NX-DX2				
	NX-DY				
	NX-S01				
	NX-S11				
	NX-S12				
	NX-S21				

52.2 System Configuration

52.2.1 Connecting to DMC10

Communication driver

AZBIL SDC/DMC

(1) When using the connector conversion box

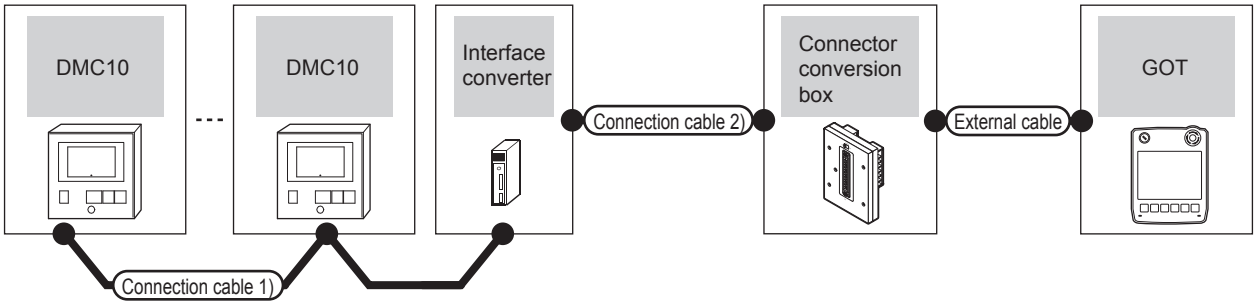

Temperature controller	Connection cable 1)		Interface converter*1		Connection cable 2)	Connector conversion box	External cable	GOT model	Total distance *2	Number of connectable equipment
Model	Cable model Connection diagram number	Max. distance	Model	Communication type	Cable model Connection diagram number					
DMC10	User preparing RS485 connection diagram 1)	500m	CMC10L	RS-232	User preparing RS232 connection diagram 1)	GT11H-CNB-37S	GT11H-C30-37P (3m)	GT14 Handy	6m	Up to 15 temperature controllers for 1 GOT

*1 Product manufactured by Azbil Corporation. For details on the product, contact Azbil Corporation.
*2 The distance from the GOT to the interface converter (Connection cable 2) + External cable)

(2) When using the external cable (GT11H-C□□□-37P)

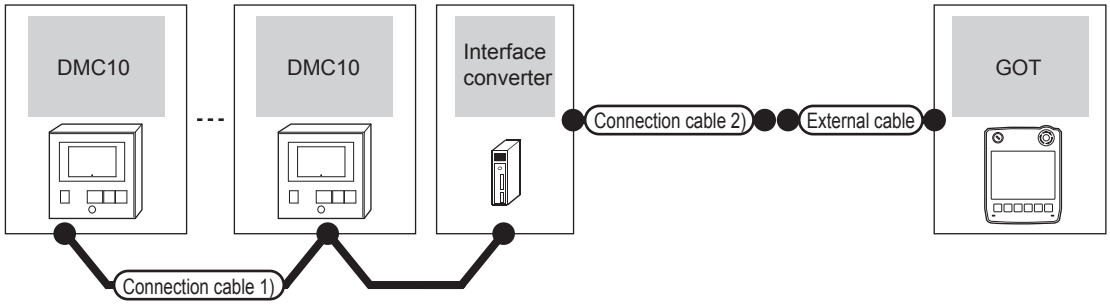

Temperature controller	Connection cable 1)		Interface converter*1		Connection cable 2)	External cable	GOT model	Total distance *2	Number of connectable equipment
Model	Cable model Connection diagram number	Max. distance	Model	Communication type	Cable model Connection diagram number				
DMC10	User preparing RS485 connection diagram 1)	500m	CMC10L	RS-232	User preparing RS232 connection diagram 2)	GT11H-C30-37P (3m)	GT14 Handy	6m	Up to 15 temperature controllers for 1 GOT

*1 Product manufactured by Azbil Corporation. For details on the product, contact Azbil Corporation.
*2 The distance from the GOT to the interface converter (Connection cable 2) + External cable)

(3) When using the external cable (GT11H-C□□□)

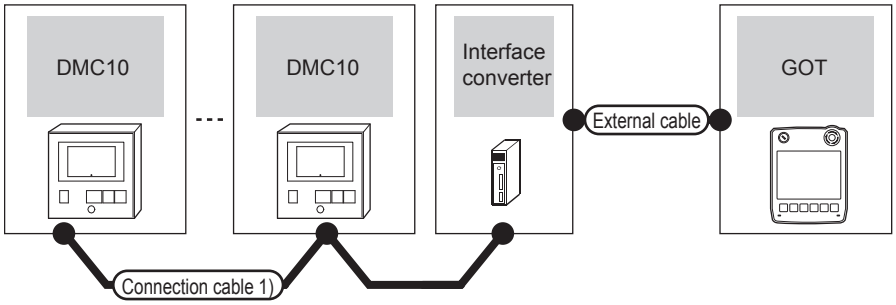

Temperature controller	Connection cable 1)		Interface converter*1		External cable	GOT model	Total distance *2	Number of connectable equipment
Model	Cable model Connection diagram number	Max. distance	Model	Communication type				
DMC10	User preparing RS485 connection diagram 1)	500m	CMC10L	RS-232	GT11H-C30(3m) GT11H-C60(6m) User preparing RS232 connection diagram 3)	GT14 Handy	6m	Up to 15 temperature controllers for 1 GOT

*1 Product manufactured by Azbil Corporation. For details on the product, contact Azbil Corporation.
*2 The distance from the GOT to the interface converter (Connection cable 2) + External cable)

52.2.2 Connecting to DMC50

Communication driver
AZBIL SDC/DMC

(1) When using the connector conversion box

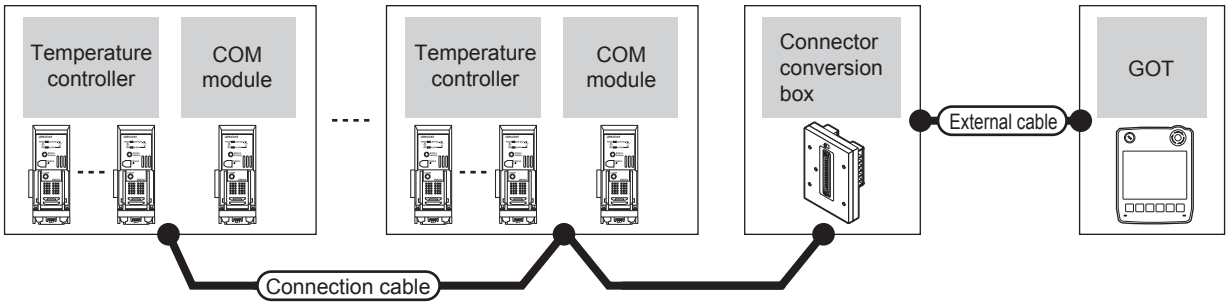

Temperature controller	Connection cable	COM module*1		Connector conversion box	External cable	GOT model	Total distance *2	Number of connectable equipment
Model	Cable model Connection diagram number	Model	Communication type					
DMC50C□□□X	User preparing RS485 connection diagram 6)	DMC50M□20X	RS-485	GT11H-CNB-37S	GT11H-C30-37P(3m) GT11H-C60-37P(6m) GT11H-C100-37P(10m)	GT14 Handy	13m	Up to 10 COM modules for 1 GOT Up to 8 temperature controllers for 1 COM module

*1 Product manufactured by Azbil Corporation. For details on the product, contact Azbil Corporation.
*2 The distance from the GOT to the interface converter (Connection cable + External cable)

(2) When using the external cable (GT11H-C□□□-37P)

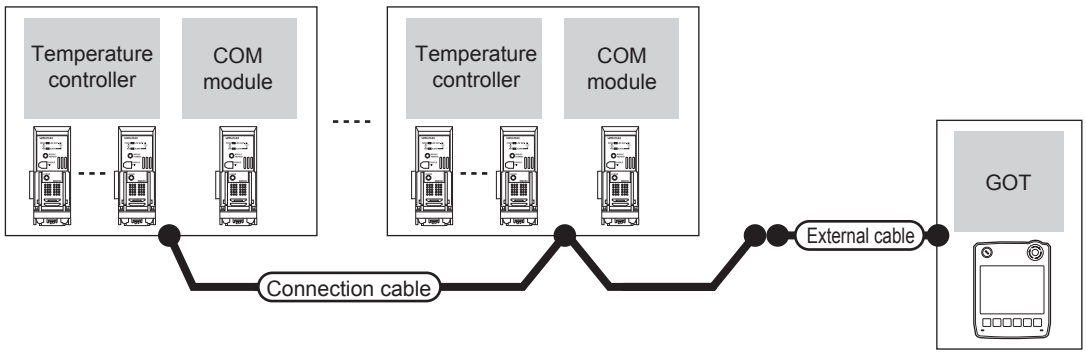

Temperature controller	Connection cable	COM module*1		External cable	GOT model	Total distance *2	Number of connectable equipment
Model	Cable model Connection diagram number	Model	Communication type				
DMC50C□□□X	User preparing RS485 connection diagram 7)	DMC50M□20X	RS-485	GT11H-C30-37P(3m) GT11H-C60-37P(6m) GT11H-C100-37P(10m)	GT14 Handy	13m	Up to 10 COM modules for 1 GOT Up to 8 temperature controllers for 1 COM module

*1 Product manufactured by Azbil Corporation. For details on the product, contact Azbil Corporation.
*2 The distance from the GOT to the interface converter (Connection cable + External cable)

(3) When using the external cable (GT11H-C□□□)

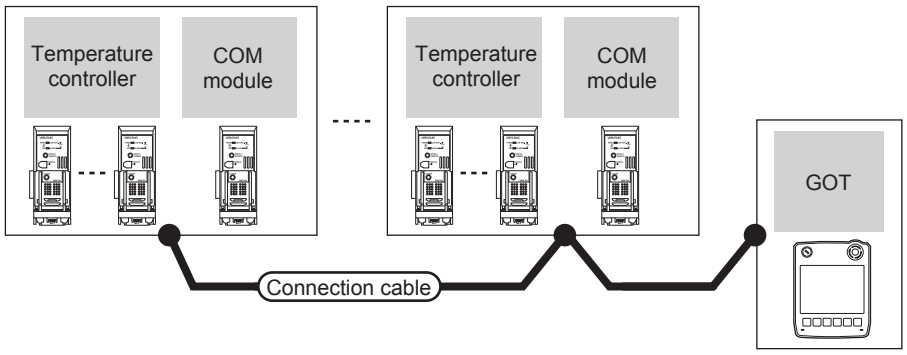

Temperature controller	COM module*1		External cable	GOT model	Total distance *2	Number of connectable equipment
Model	Model	Communication type				
DMC50C□□□X	DMC50M□20X	RS-485	GT11H-C30(3m) GT11H-C60(6m) GT11H-C100(10m) User preparing RS485 connection diagram 8)	GT14 Handy	13m	Up to 10 COM modules for 1 GOT Up to 8 temperature controllers for 1 COM module

*1 Product manufactured by Azbil Corporation. For details on the product, contact Azbil Corporation.
*2 The distance from the GOT to the interface converter (Connection cable + External cable)

52.2.3 Connecting to SDC15, SDC25/26 or SDC35/36

Communication driver

AZBIL SDC/DMC

(1) When using the connector conversion box

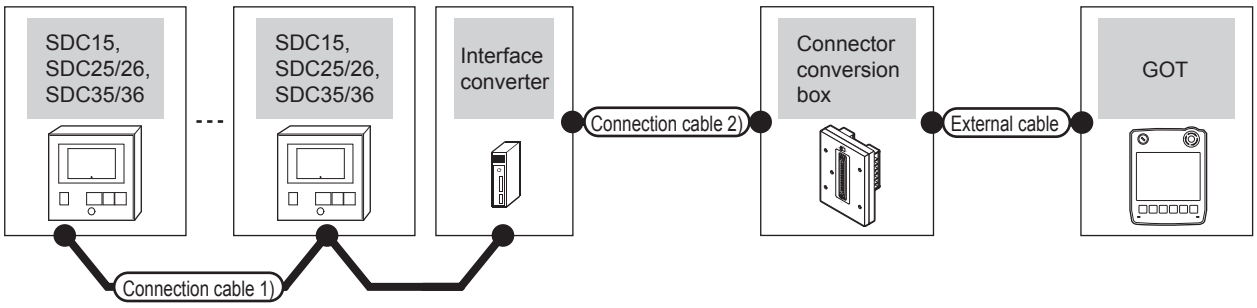

Temperature controller	Connection cable 1)		Interface converter*1		Connection cable 2)	Connector conversion box	External cable	GOT model	Total distance *2	Number of connectable equipment
Model	Cable model Connection diagram number	Max. distance	Model	Communication type	Cable model Connection diagram number					
SDC15 SDC25/26 SDC35/36	User preparing RS485 connection diagram 1)	500m	CMC10L	RS-232	User preparing RS232 connection diagram 1)	GT11H-CNB-37S	GT11H-C30-37P (3m)	GT14 Handy	6m	Up to 31 temperature controllers for 1 GOT

*1 Product manufactured by Azbil Corporation. For details on the product, contact Azbil Corporation.

*2 The distance from the GOT to the interface converter (Connection cable 2) + External cable)

(2) When using the external cable (GT11H-C□□□-37P)

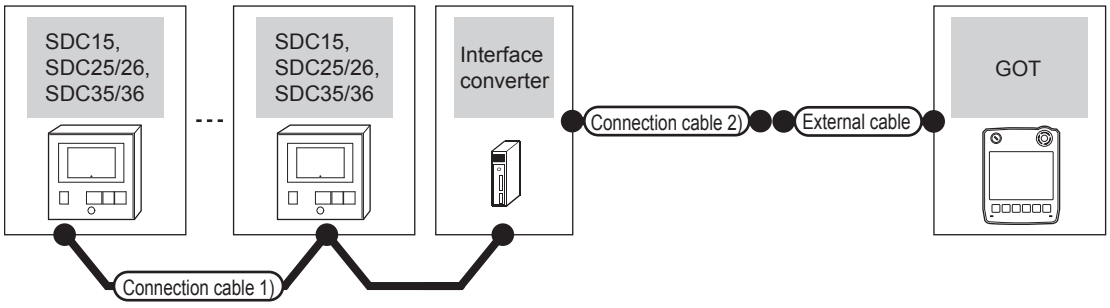

Temperature controller	Connection cable 1)		Interface converter*1		Connection cable 2)	External cable	GOT model	Total distance *2	Number of connectable equipment
Model	Cable model Connection diagram number	Max. distance	Model	Communication type	Cable model Connection diagram number				
SDC15 SDC25/26 SDC35/36	User preparing RS485 connection diagram 1)	500m	CMC10L	RS-232	User preparing RS232 connection diagram 2)	GT11H-C30-37P(3m)	GT14 Handy	6m	Up to 31 temperature controllers for 1 GOT

*1 Product manufactured by Azbil Corporation. For details on the product, contact Azbil Corporation.

*2 The distance from the GOT to the interface converter (Connection cable 2) + External cable)

(3) When using the external cable (GT11H-C□□□)

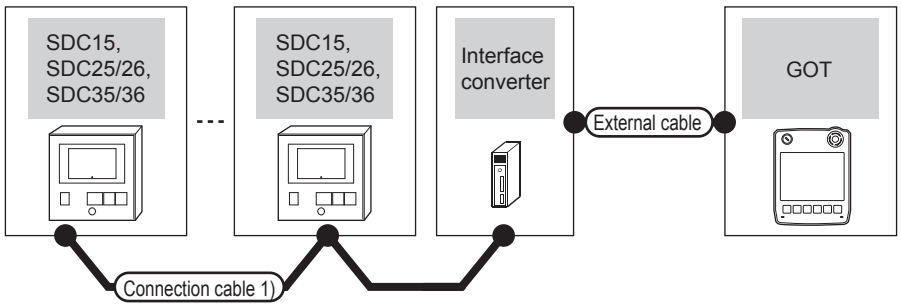

Temperature controller	Connection cable 1)		Interface converter*1		External cable	GOT model	Total distance *2	Number of connectable equipment
Model	Cable model Connection diagram number	Max. distance	Model	Communication type				
SDC15 SDC25/26 SDC35/36	User preparing RS485 connection diagram 1)	500m	CMC10L	RS-232	GT11H-C30(3m) GT11H-C60(6m) User preparing RS232 connection diagram 3)	GT14 Handy	6m	Up to 31 temperature controllers for 1 GOT

*1 Product manufactured by Azbil Corporation. For details on the product, contact Azbil Corporation.

*2 The distance from the GOT to the interface converter (Connection cable 2) + External cable)

52.2.4 Connecting to SDC20/21

■ When using the Interface converter

Communication driver

AZBIL SDC/DMC

(1) When using the connector conversion box

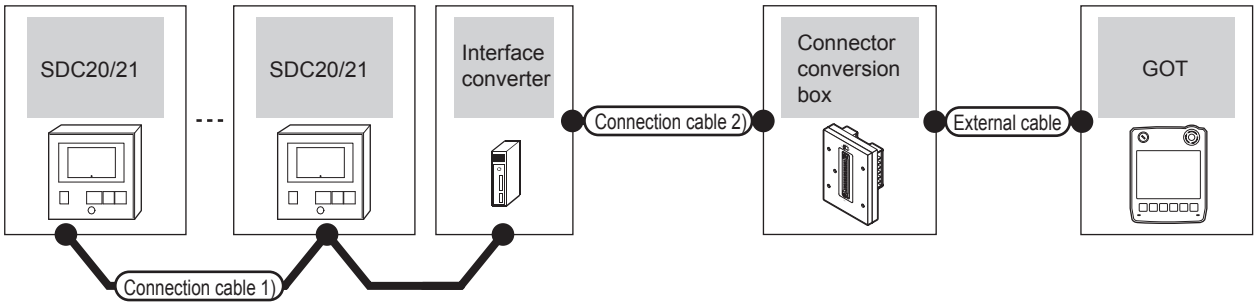

Temperature controller	Connection cable 1)		Interface converter*1		Connection cable 2)	Connector conversion box	External cable	GOT model	Total distance *2	Number of connectable equipment
Model	Cable model Connection diagram number	Max. distance	Model	Communication type	Cable model Connection diagram number					
SDC20/21	User preparing RS485 connection diagram 2)	500m	CMC10L	RS-232	User preparing RS232 connection diagram 1)	GT11H-CNB-37S	GT11H-C30-37P (3m)	GT14 Handy	6m	Up to 31 temperature controllers for 1 GOT

*1 Product manufactured by Azbil Corporation. For details on the product, contact Azbil Corporation.

*2 The distance from the GOT to the interface converter (Connection cable 2) + External cable)

(2) When using the external cable (GT11H-C□□□-37P)

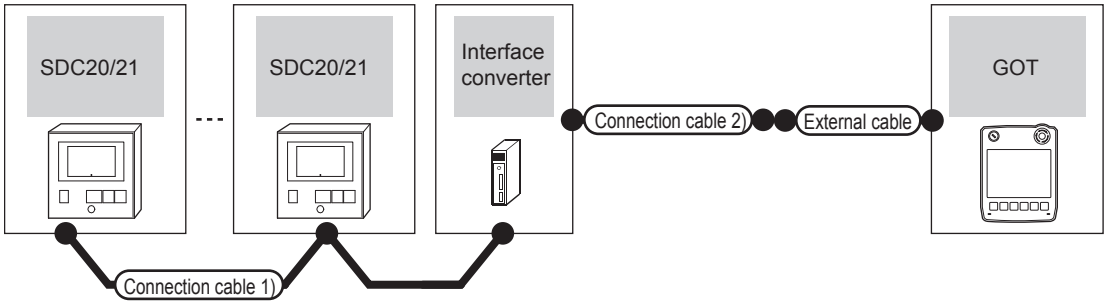

Temperature controller	Connection cable 1)		Interface converter*1		Connection cable 2)	External cable	GOT model	Total distance *2	Number of connectable equipment
Model	Cable model Connection diagram number	Max. distance	Model	Communication type	Cable model Connection diagram number				
SDC20/21	User preparing RS485 connection diagram 2)	500m	CMC10L	RS-232	User preparing RS232 connection diagram 2)	GT11H-C30-37P(3m)	GT14 Handy	6m	Up to 31 temperature controllers for 1 GOT

*1 Product manufactured by Azbil Corporation. For details on the product, contact Azbil Corporation.

*2 The distance from the GOT to the interface converter (Connection cable 2) + External cable)

(3) When using the external cable (GT11H-C□□□)

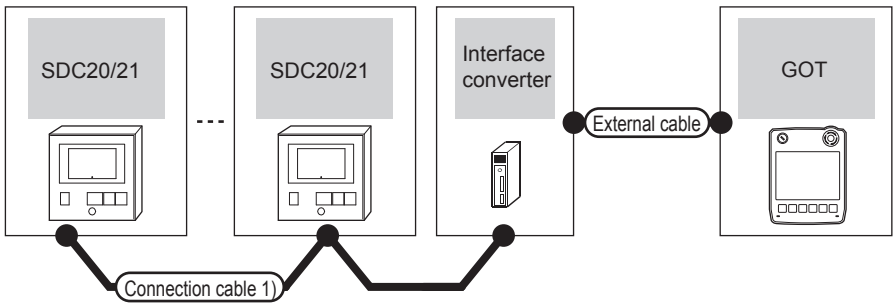

Temperature controller	Connection cable 1)		Interface converter*1		External cable	GOT model	Total distance *2	Number of connectable equipment
Model	Cable model Connection diagram number	Max. distance	Model	Communication type				
SDC20/21	User preparing RS485 connection diagram 2)	500m	CMC10L	RS-232	GT11H-C30(3m) GT11H-C60(6m) User preparing RS232 connection diagram 3)	GT14 Handy	6m	Up to 31 temperature controllers for 1 GOT

*1 Product manufactured by Azbil Corporation. For details on the product, contact Azbil Corporation.
*2 The distance from the GOT to the interface converter (Connection cable 2) + External cable)

■ When connecting directly to one temperature controller

(1) When using the connector conversion box

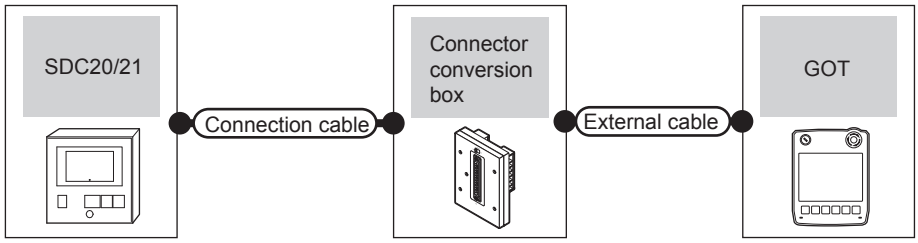

Temperature controller		Connection cable	Connector conversion box	External cable	GOT model	Total distance	Number of connectable equipment
Model	Communication type	Cable model Connection diagram number					
SDC20/21	RS-232	User preparing RS232 connection diagram 1)	GT11H-CNB-37S	GT11H-C30-37P(3m)	GT14 Handy	6m	1 temperature controller for 1 GOT

(2) When using the external cable (GT11H-C□□□-37P)

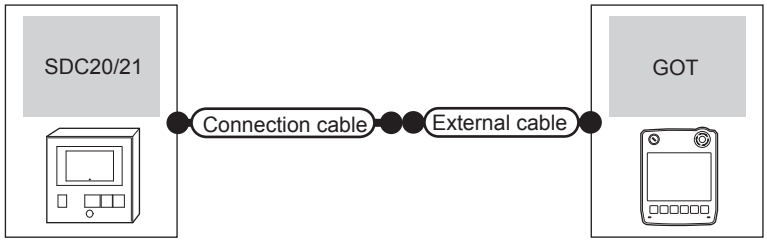

Temperature controller		Connection cable	External cable	GOT model	Total distance	Number of connectable equipment
Model	Communication type	Cable model Connection diagram number				
SDC20/21	RS-232	User preparing RS232 connection diagram 2)	GT11H-C30-37P(3m)	GT14 Handy	6m	1 temperature controller for 1 GOT

(3) When using the external cable (GT11H-C□□□)

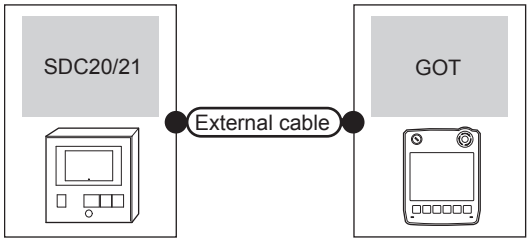

Temperature controller		External cable	GOT model	Total distance	Number of connectable equipment
Model	Communication type				
SDC20/21	RS-232	GT11H-C30(3m) GT11H-C60(6m) (User preparing) RS232 connection diagram 6)	GT14 Handy	6m	1 temperature controller for 1 GOT

■ When connecting directly to multiple temperature controllers

(1) When using the connector conversion box

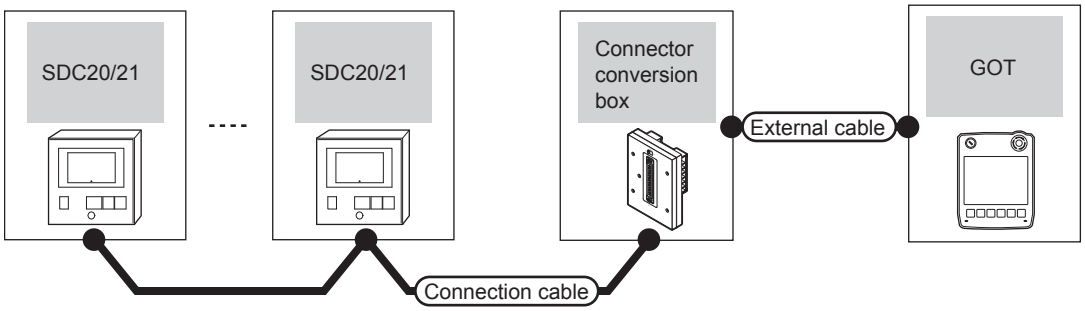

Temperature controller		Connection cable	Connector conversion box	External cable	GOT model	Total distance	Number of connectable equipment
Model	Communication type	Cable model Connection diagram number					
SDC20/21	RS-485	(User preparing) RS485 connection diagram 3)	GT11H-CNB-37S	GT11H-C30-37P(3m) GT11H-C60-37P(6m) GT11H-C100-37P(10m)	GT14 Handy	13m	Up to 10 temperature controllers for 1 GOT

(2) When using the external cable (GT11H-C□□□-37P)

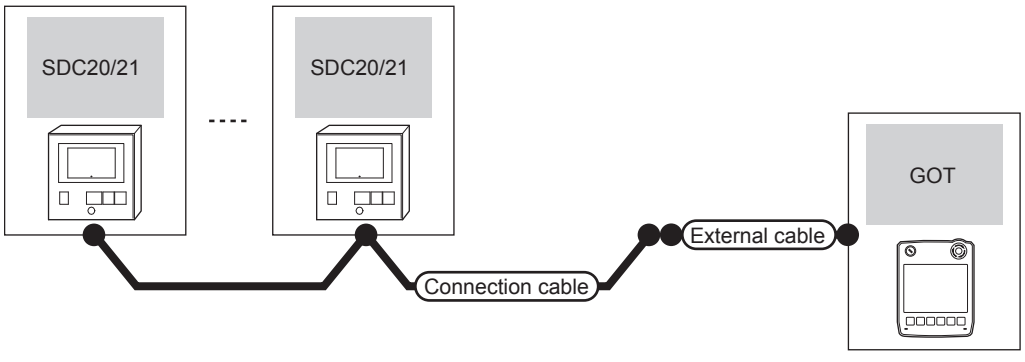

Temperature controller		Connection cable	External cable	GOT model	Total distance	Number of connectable equipment
Model	Communication type	Cable model Connection diagram number				
SDC20/21	RS-485	(User preparing) RS485 connection diagram 4)	GT11H-C30-37P(3m) GT11H-C60-37P(6m) GT11H-C100-37P(10m)	GT14 Handy	13m	Up to 10 temperature controllers for 1 GOT

(3) When using the external cable (GT11H-C□□□)

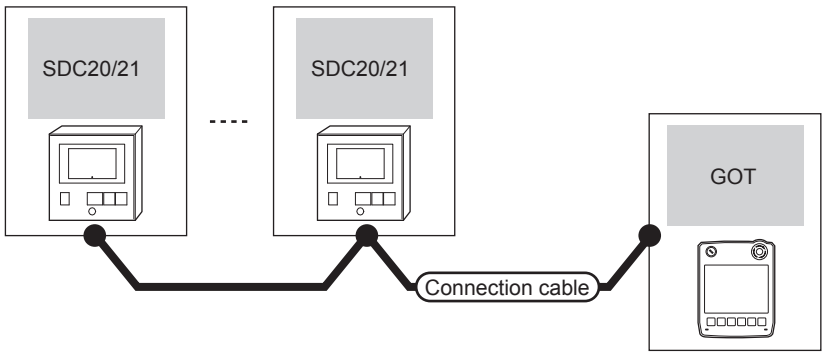

Temperature controller		External cable	GOT model	Total distance	Number of connectable equipment
Model	Communication type				
SDC20/21	RS-485	GT11H-C30(3m) GT11H-C60(6m) GT11H-C100(10m) User preparing RS485 connection diagram 5)	GT14 Handy	13m	Up to 10 temperature controllers for 1 GOT

52.2.5 Connecting to SDC30/31

■ When using the Interface converter

Communication driver

AZBIL SDC/DMC

(1) When using the connector conversion box

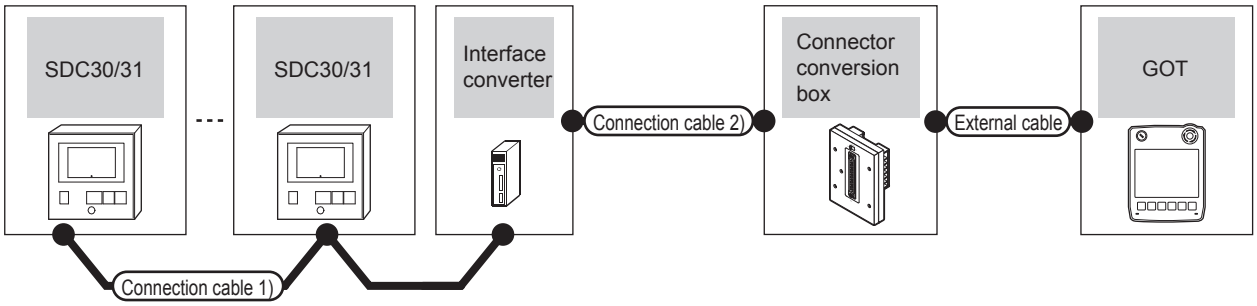

Temperature controller	Connection cable 1)		Interface converter*1		Connection cable 2)	Connector conversion box	External cable	GOT model	Total distance *2	Number of connectable equipment
Model	Cable model Connection diagram number	Max. distance	Model	Communication type	Cable model Connection diagram number					
SDC30/31	User preparing RS485 connection diagram 2)	500m	CMC10L	RS-232	User preparing RS232 connection diagram 1)	GT11H-CNB-37S	GT11H-C30-37P (3m)	GT14 Handy	6m	Up to 31 temperature controllers for 1 GOT

*1 Product manufactured by Azbil Corporation. For details on the product, contact Azbil Corporation.

*2 The distance from the GOT to the interface converter (Connection cable 2) + External cable)

(2) When using the external cable (GT11H-C□□□-37P)

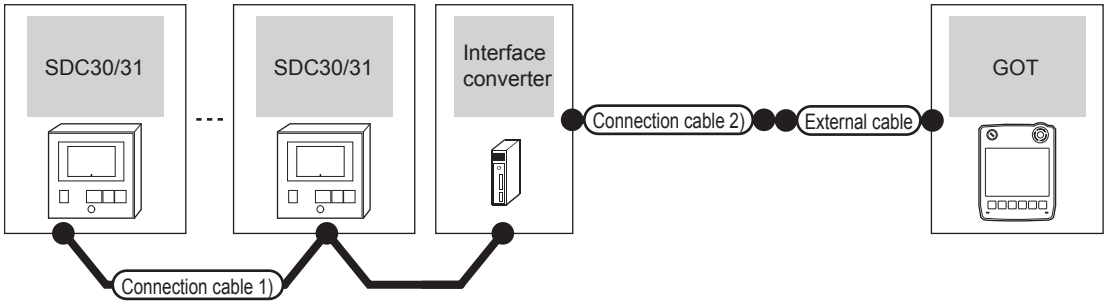

Temperature controller	Connection cable 1)		Interface converter*1		Connection cable 2)	External cable	GOT model	Total distance *2	Number of connectable equipment
Model	Cable model Connection diagram number	Max. distance	Model	Communication type	Cable model Connection diagram number				
SDC30/31	User preparing RS485 connection diagram 2)	500m	CMC10L	RS-232	User preparing RS232 connection diagram 2)	GT11H-C30-37P (3m)	GT14 Handy	6m	Up to 31 temperature controllers for 1 GOT

*1 Product manufactured by Azbil Corporation. For details on the product, contact Azbil Corporation.

*2 The distance from the GOT to the interface converter (Connection cable 2) + External cable)

(3) When using the external cable (GT11H-C□□□)

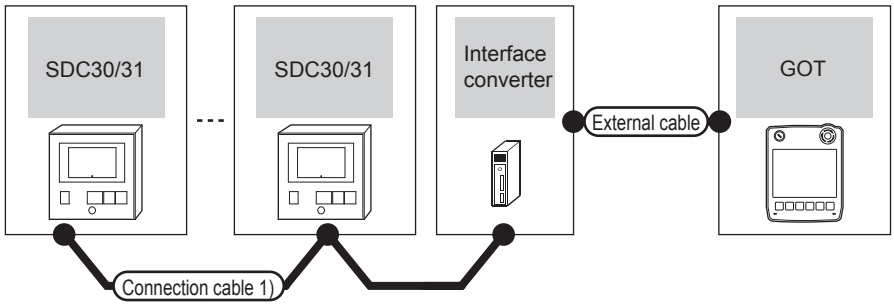

Temperature controller	Connection cable 1)		Interface converter*1		External cable	GOT model	Total distance *2	Number of connectable equipment
Model	Cable model Connection diagram number	Max. distance	Model	Communication type				
SDC30/31	User preparing RS485 connection diagram 2)	500m	CMC10L	RS-232	GT11H-C30(3m) GT11H-C60(6m) User preparing RS232 connection diagram 3)	GT14 Handy	6m	Up to 31 temperature controllers for 1 GOT

*1 Product manufactured by Azbil Corporation. For details on the product, contact Azbil Corporation.
*2 The distance from the GOT to the interface converter (Connection cable 2) + External cable)

■ When connecting directly

(1) When using the connector conversion box

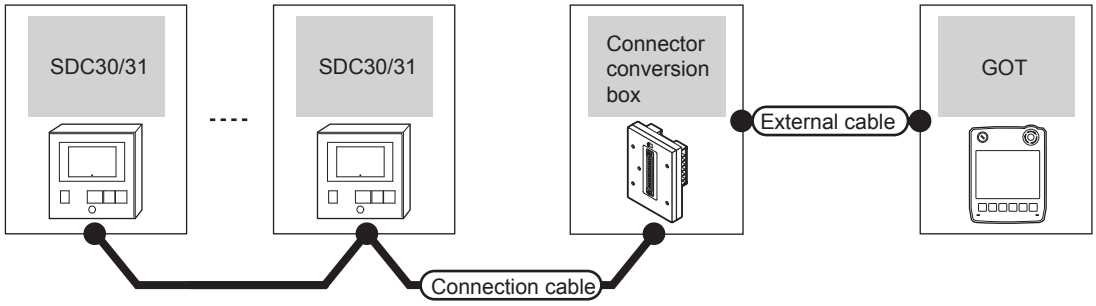

Temperature controller		Connection cable	Connector conversion box	External cable	GOT model	Total distance	Number of connectable equipment
Model	Communication type	Cable model Connection diagram number					
SDC30/31	RS-485	User preparing RS485 connection diagram 3)	GT11H-CNB-37S	GT11H-C30-37P(3m) GT11H-C60-37P(6m) GT11H-C100-37P(10m)	GT14 Handy	13m	Up to 10 temperature controllers for 1 GOT

(2) When using the external cable (GT11H-C□□□-37P)

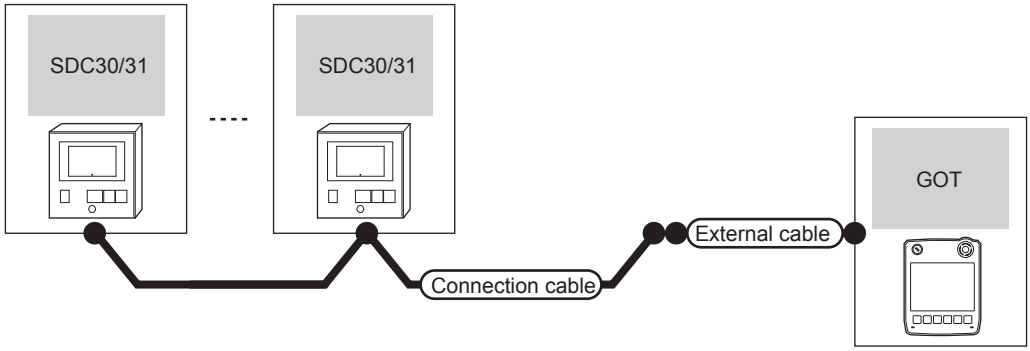

Temperature controller		Connection cable	External cable	GOT model	Total distance	Number of connectable equipment
Model	Communication type	Cable model Connection diagram number				
SDC30/31	RS-485	User preparing RS485 connection diagram 4)	GT11H-C30-37P(3m) GT11H-C60-37P(6m) GT11H-C100-37P(10m)	GT14 Handy	13m	Up to 10 temperature controllers for 1 GOT

(3) When using the external cable (GT11H-C□□□)

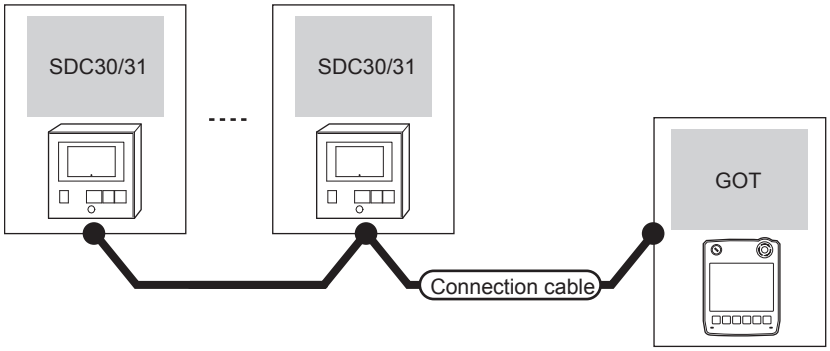

Temperature controller		External cable	GOT model	Total distance	Number of connectable equipment
Model	Communication type				
SDC30/31	RS-485	GT11H-C30(3m) GT11H-C60(6m) GT11H-C100(10m) (User preparing) RS485 connection diagram 5)	GT14 Handy	13m	Up to 10 temperature controllers for 1 GOT

52.2.6 Connecting to SDC40A/40B/40G

■ When using the Interface converter

Communication driver

AZBIL SDC/DMC

(1) When using the connector conversion box

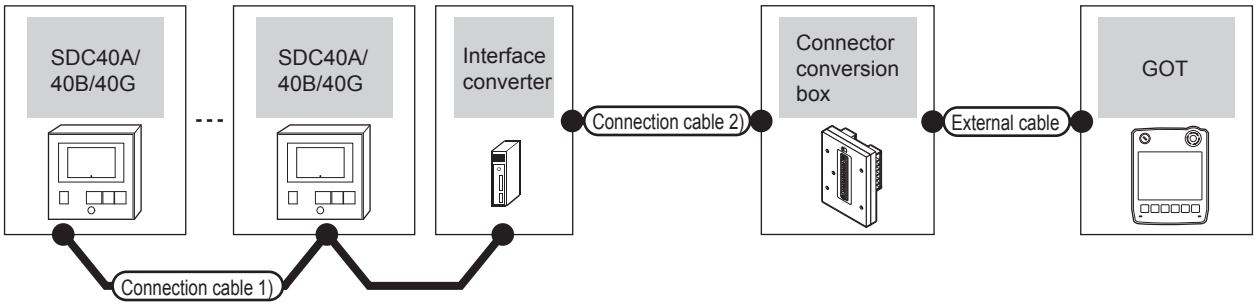

Temperature controller	Connection cable 1)		Interface converter*1		Connection cable 2)	Connector conversion box	External cable	GOT model	Total distance *2	Number of connectable equipment
Model	Cable model Connection diagram number	Max. distance	Model	Communication type	Cable model Connection diagram number					
SDC40A /40B /40G	User preparing RS485 connection diagram 2)	500m	CMC10L	RS-232	User preparing RS232 connection diagram 1)	GT11H-CNB-37S	GT11H-C30-37P (3m)	GT14 Handy	6m	Up to 31 temperature controllers for 1 GOT

*1 Product manufactured by Azbil Corporation. For details on the product, contact Azbil Corporation.

*2 The distance from the GOT to the interface converter (Connection cable 2) + External cable)

(2) When using the external cable (GT11H-C□□□-37P)

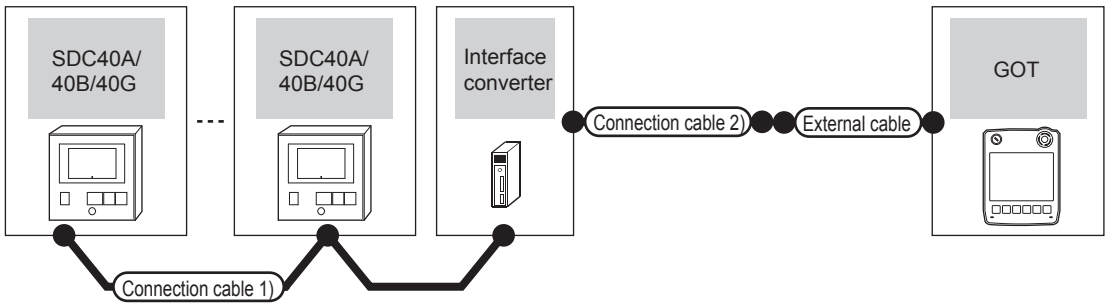

Temperature controller	Connection cable 1)		Interface converter*1		Connection cable 2)	External cable	GOT model	Total distance *2	Number of connectable equipment
Model	Cable model Connection diagram number	Max. distance	Model	Communication type	Cable model Connection diagram number				
SDC40A /40B /40G	User preparing RS485 connection diagram 2)	500m	CMC10L	RS-232	User preparing RS232 connection diagram 2)	GT11H-C30-37P(3m)	GT14 Handy	6m	Up to 31 temperature controllers for 1 GOT

*1 Product manufactured by Azbil Corporation. For details on the product, contact Azbil Corporation.

*2 The distance from the GOT to the interface converter (Connection cable 2) + External cable)

(3) When using the external cable (GT11H-C□□□)

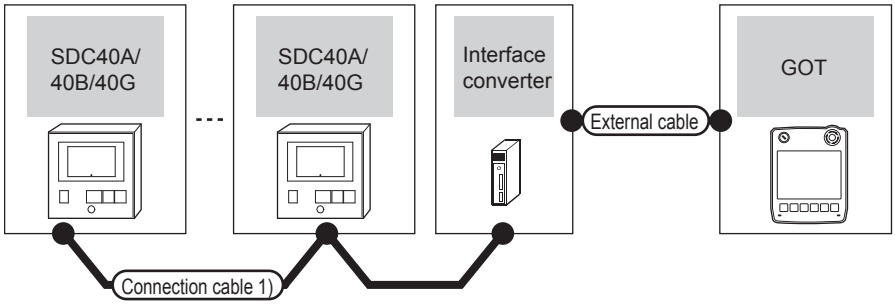

Temperature controller	Connection cable 1)		Interface converter*1		External cable	GOT model	Total distance *2	Number of connectable equipment
Model	Cable model Connection diagram number	Max. distance	Model	Communication type				
SDC40A /40B /40G	User preparing RS485 connection diagram 2)	500m	CMC10L	RS-232	GT11H-C30(3m) GT11H-C60(6m) User preparing RS232 connection diagram 3)	GT14 Handy	6m	Up to 31 temperature controllers for 1 GOT

*1 Product manufactured by Azbil Corporation. For details on the product, contact Azbil Corporation.

*2 The distance from the GOT to the interface converter (Connection cable 2) + External cable)

■ When connecting directly to one temperature controller

(1) When using the connector conversion box

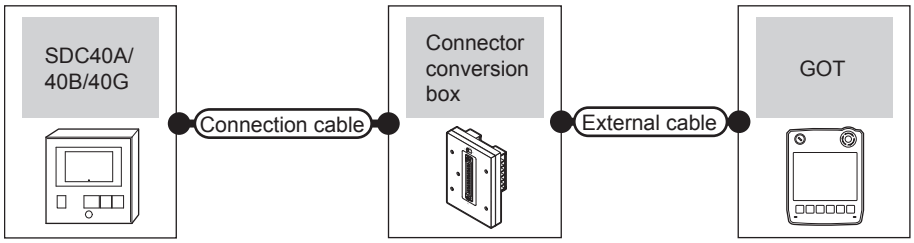

Temperature controller		Connection cable	Connector conversion box	External cable	GOT model	Total distance	Number of connectable equipment
Model	Communication type	Cable model Connection diagram number					
SDC40A/ 40B/40G	RS-232	User preparing RS232 connection diagram 2)	GT11H-CNB-37S	GT11H-C30-37P(3m)	GT14 Handy	6m	1 temperature controller for 1 GOT

(2) When using the external cable (GT11H-C□□□-37P)

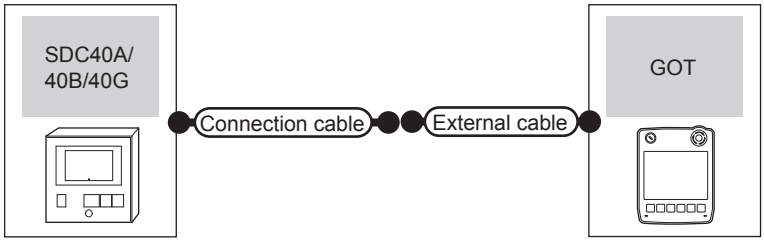

Temperature controller		Connection cable	External cable	GOT model	Total distance	Number of connectable equipment
Model	Communication type	Cable model Connection diagram number				
SDC40A/ 40B/40G	RS-232	User preparing RS232 connection diagram 5)	GT11H-C30-37P(3m)	GT14 Handy	6m	1 temperature controller for 1 GOT

(3) When using the external cable (GT11H-C□□□)

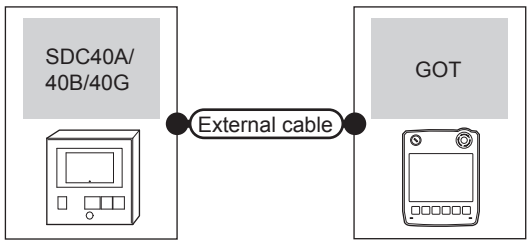

Temperature controller		External cable	GOT model	Total distance	Number of connectable equipment
Model	Communication type				
SDC40A/ 40B/40G	RS-232	GT11H-C30(3m) GT11H-C60(6m) User preparing RS232 connection diagram 3)	GT14 Handy	6m	1 temperature controller for 1 GOT

■ When connecting directly to multiple temperature controllers

(1) When using the connector conversion box

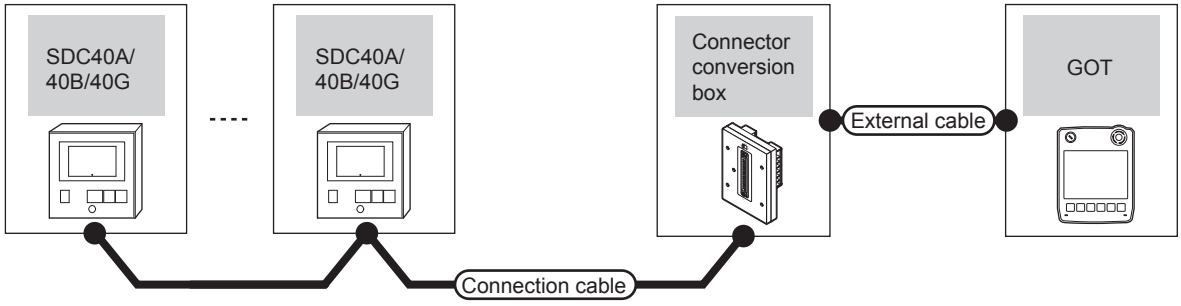

Temperature controller		Connection cable	Connector conversion box	External cable	GOT model	Total distance	Number of connectable equipment
Model	Communication type	Cable model Connection diagram number					
SDC40A/ 40B/40G	RS-485	User preparing RS485 connection diagram 3)	GT11H-CNB-37S	GT11H-C30-37P(3m) GT11H-C60-37P(6m) GT11H-C100-37P(10m)	GT14 Handy	13m	Up to 10 temperature controllers for 1 GOT

(2) When using the external cable (GT11H-C□□□-37P)

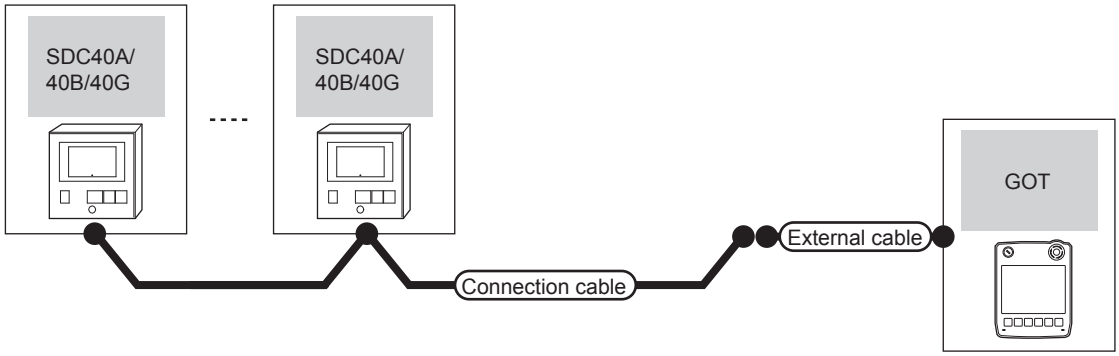

Temperature controller		Connection cable	External cable	GOT model	Total distance	Number of connectable equipment
Model	Communication type	Cable model Connection diagram number				
SDC40A/ 40B/40G	RS-485	User preparing RS485 connection diagram 4)	GT11H-C30-37P(3m) GT11H-C60-37P(6m) GT11H-C100-37P(10m)	GT14 Handy	13m	Up to 10 temperature controllers for 1 GOT

(3) When using the external cable (GT11H-C□□□)

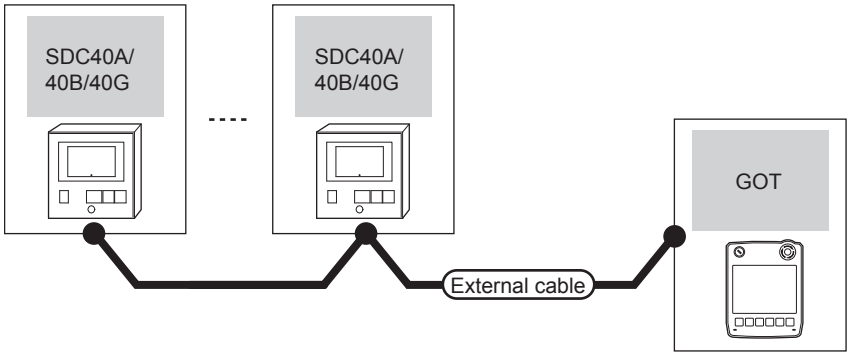

Temperature controller		External cable	GOT model	Total distance	Number of connectable equipment
Model	Communication type				
SDC40A/ 40B/40G	RS-485	GT11H-C30(3m) GT11H-C60(6m) GT11H-C100(10m) (User preparing) RS485 connection diagram 5)	GT14 Handy	13m	Up to 10 temperature controllers for 1 GOT

52.2.7 Connecting to SDC45/46, CMS, MQV, MPC, MVF, RX

■ When using the Interface converter

Communication driver: AZBIL SDC/DMC

(1) When using the connector conversion box

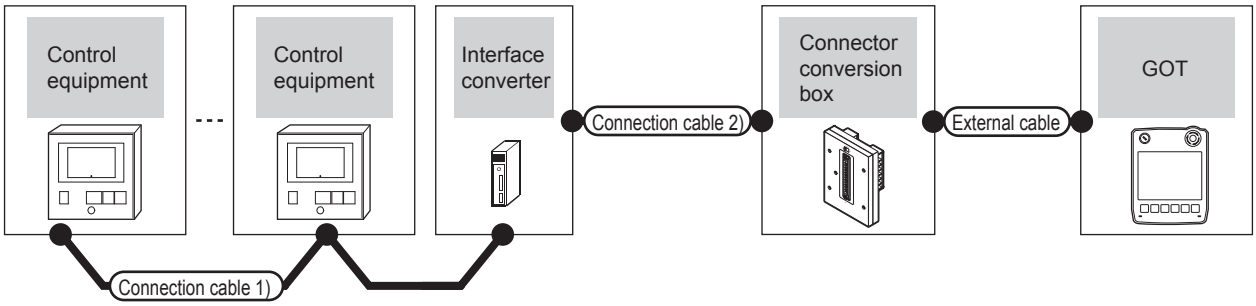

Control equipment	Connection cable 1)		Interface converter*1		Connection cable 2)	Connector conversion box	External cable	GOT model	Total distance *2	Number of connectable equipment
Model	Cable model Connection diagram number	Max. distance	Model	Communication type	Cable model Connection diagram number					
SDC45/46 CMS MQV MPC MVF RX	User preparing RS485 connection diagram 2)	500m	CMC10L	RS-232	User preparing RS232 connection diagram 1)	GT11H-CNB-37S	GT11H-C30-37P(3m)	GT14 Handy	6m	Up to 31 control equipment for 1 GOT

*1 Product manufactured by Azbil Corporation. For details on the product, contact Azbil Corporation.
*2 The distance from the GOT to the interface converter (Connection cable 2) + External cable)

(2) When using the external cable (GT11H-C□□□-37P)

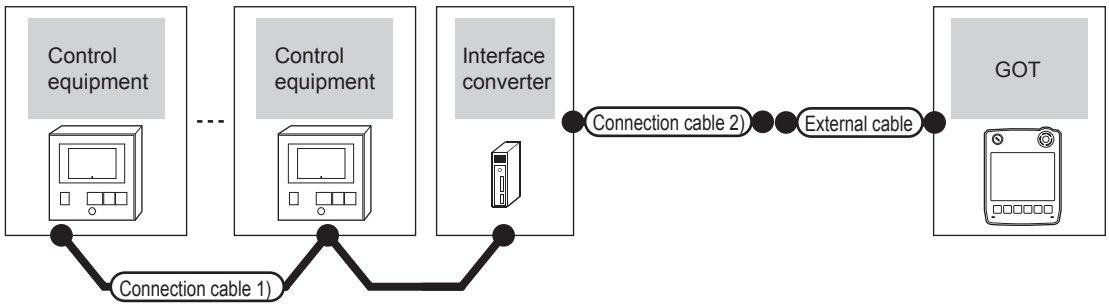

Control equipment	Connection cable 1)		Interface converter*1		Connection cable 2)	External cable	GOT model	Total distance *2	Number of connectable equipment
Model	Cable model Connection diagram number	Max. distance	Model	Communication type	Cable model Connection diagram number				
SDC45/46 CMS MQV MPC MVF RX	User preparing RS485 connection diagram 2)	500m	CMC10L	RS-232	User preparing RS232 connection diagram 2)	GT11H-C30-37P(3m)	GT14 Handy	6m	Up to 31 control equipment for 1 GOT

*1 Product manufactured by Azbil Corporation. For details on the product, contact Azbil Corporation.
*2 The distance from the GOT to the interface converter (Connection cable 2) + External cable)

(3) When using the external cable (GT11H-C□□□)

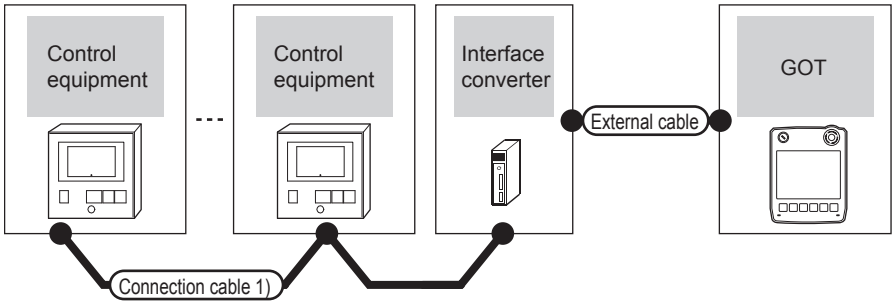

Control equipment	Connection cable 1)		Interface converter*1		External cable	GOT model	Total distance *2	Number of connectable equipment
Model	Cable model Connection diagram number	Max. distance	Model	Communication type				
SDC45/46 CMS MQV MPC MVF RX	User preparing RS485 connection diagram 2)	500m	CMC10L	RS-232	GT11H-C30(3m) GT11H-C60(6m) User preparing RS232 connection diagram 3)	GT14 Handy	6m	Up to 31 control equipment for 1 GOT

*1 Product manufactured by Azbil Corporation. For details on the product, contact Azbil Corporation.

*2 The distance from the GOT to the interface converter (Connection cable 2) + External cable)

52.2.8 Connecting to CMF050, CML, PBC201-VN2, AUR350C, AUR450C, CMC10B

■ When using the Interface converter

Communication driver

AZBIL SDC/DMC

(1) When using the connector conversion box

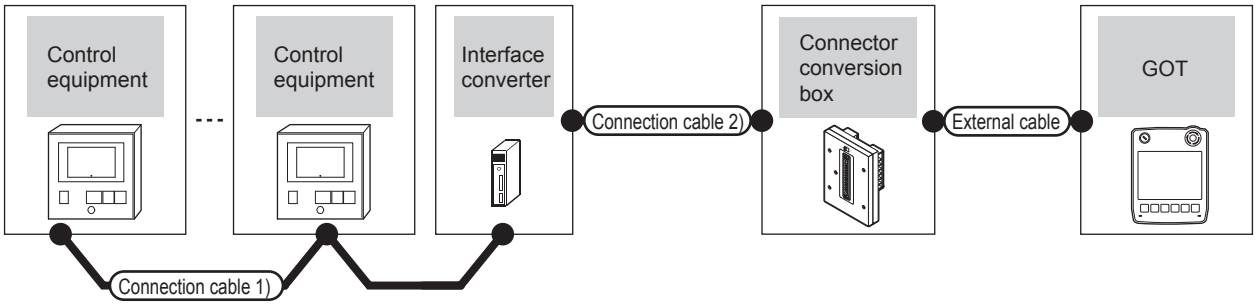

Control equipment	Connection cable 1)		Interface converter*1		Connection cable 2)	Connector conversion box	External cable	GOT model	Total distance *2	Number of connectable equipment
Model	Cable model Connection diagram number	Max. distance	Model	Communication type	Cable model Connection diagram number					
CMF050 CML PBC201-VN2 AUR350C AUR450C CMC10B	User preparing RS485 connection diagram 2)	500m	CMC10L	RS-232	User preparing RS232 connection diagram 1)	GT11H-CNB-37S	GT11H-C30-37P(3m)	GT14 Handy	6m	Up to 31 control equipment for 1 GOT

*1 Product manufactured by Azbil Corporation. For details on the product, contact Azbil Corporation.

*2 The distance from the GOT to the interface converter (Connection cable 2) + External cable)

(2) When using the external cable (GT11H-C□□□-37P)

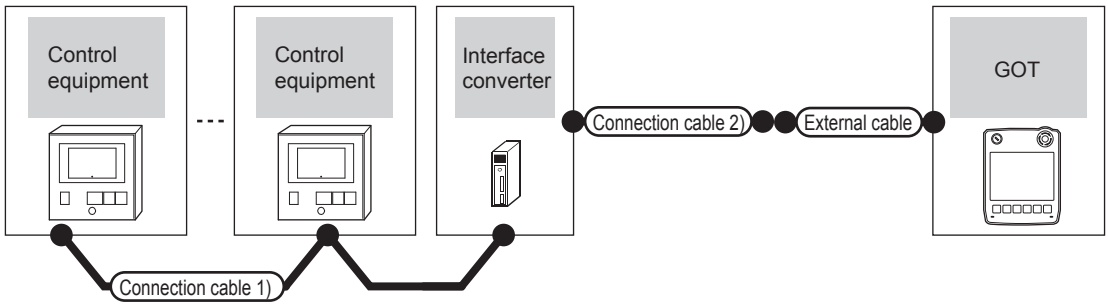

Control equipment	Connection cable 1)		Interface converter*1		Connection cable 2)	External cable	GOT model	Total distance *2	Number of connectable equipment
Model	Cable model Connection diagram number	Max. distance	Model	Communication type	Cable model Connection diagram number				
CMF050 CML PBC201-VN2 AUR350C AUR450C CMC10B	User preparing RS485 connection diagram 2)	500m	CMC10L	RS-232	User preparing RS232 connection diagram 2)	GT11H-C30-37P(3m)	GT14 Handy	6m	Up to 31 control equipment for 1 GOT

*1 Product manufactured by Azbil Corporation. For details on the product, contact Azbil Corporation.

*2 The distance from the GOT to the interface converter (Connection cable 2) + External cable)

(3) When using the external cable (GT11H-C□□□)

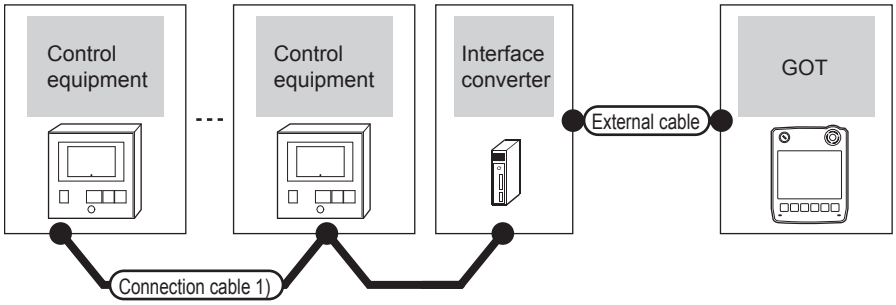

Control equipment	Connection cable 1)		Interface converter*1		External cable	GOT model	Total distance *2	Number of connectable equipment
Model	Cable model Connection diagram number	Max. distance	Model	Communication type				
CMF050 CML PBC201-VN2 AUR350C AUR450C CMC10B	User preparing RS485 connection diagram 2)	500m	CMC10L	RS-232	GT11H-C30(3m) GT11H-C60(6m) User preparing RS232 connection diagram 3)	GT14 Handy	6m	Up to 31 control equipment for 1 GOT

*1 Product manufactured by Azbil Corporation. For details on the product, contact Azbil Corporation.

*2 The distance from the GOT to the interface converter (Connection cable 2) + External cable)

■ When connecting directly

(1) When using the connector conversion box

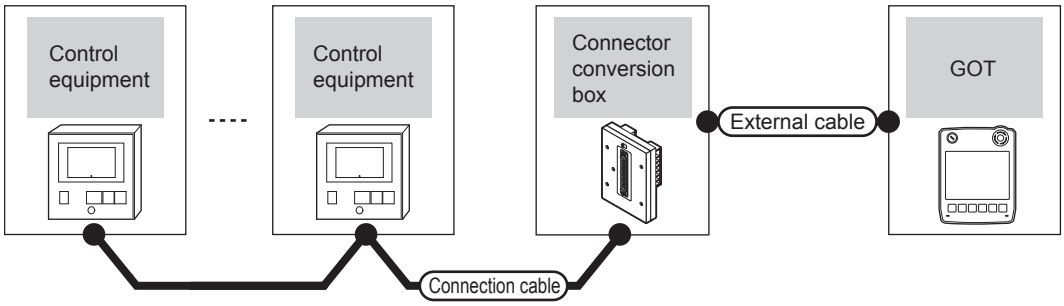

Control equipment		Connection cable	Connector conversion box	External cable	GOT model	Total distance	Number of connectable equipment
Model	Communication type	Cable model Connection diagram number					
CMF050 CML PBC201-VN2 AUR350C AUR450C CMC10B	RS-485	User preparing RS485 connection diagram 3)	GT11H-CNB-37S	GT11H-C30-37P(3m) GT11H-C60-37P(6m) GT11H-C100-37P(10m)	GT14 Handy	13m	Up to 10 control equipment for 1 GOT

(2) When using the external cable (GT11H-C□□□-37P)

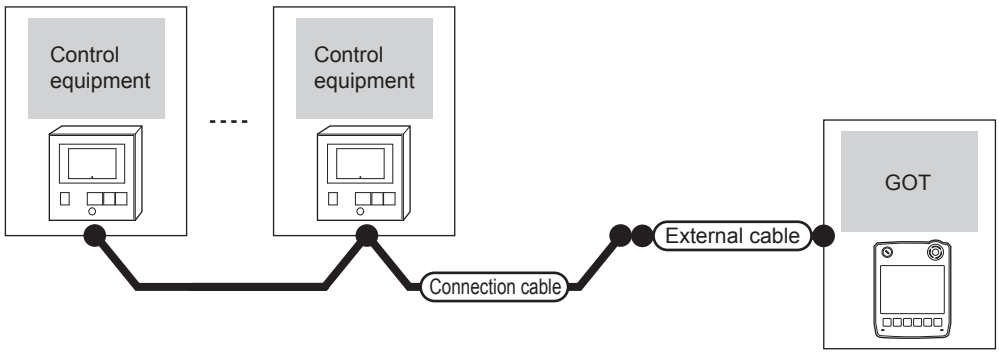

Control equipment		Connection cable	External cable	GOT model	Total distance	Number of connectable equipment
Model	Communication type	Cable model Connection diagram number				
CMF050 CML PBC201-VN2 AUR350C AUR450C CMC10B	RS-485	User preparing RS485 connection diagram 4)	GT11H-C30-37P(3m) GT11H-C60-37P(6m) GT11H-C100-37P(10m)	GT14 Handy	13m	Up to 10 control equipment for 1 GOT

(3) When using the external cable (GT11H-C□□□)

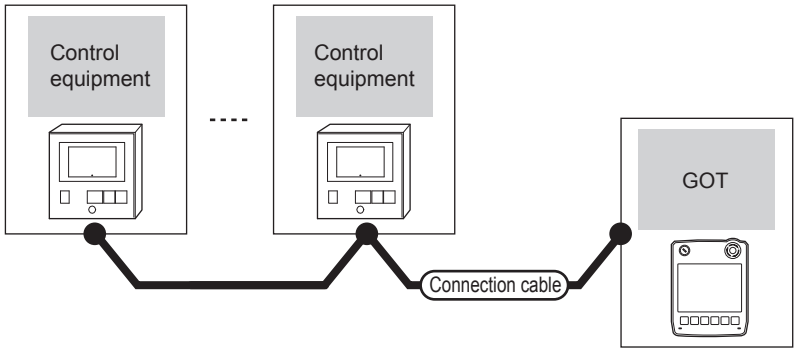

Control equipment		External cable	GOT model	Total distance	Number of connectable equipment
Model	Communication type				
CMF050 CML PBC201-VN2 AUR350C AUR450C CMC10B	RS-485	GT11H-C30(3m) GT11H-C60(6m) GT11H-C100(10m) User preparing RS485 connection diagram 5)	GT14 Handy	13m	Up to 10 control equipment for 1 GOT

52.2.9 Connecting to AHC2001

Communication driver

AZBIL SDC/DMC

■ When connecting to one temperature controller

(1) When using the connector conversion box

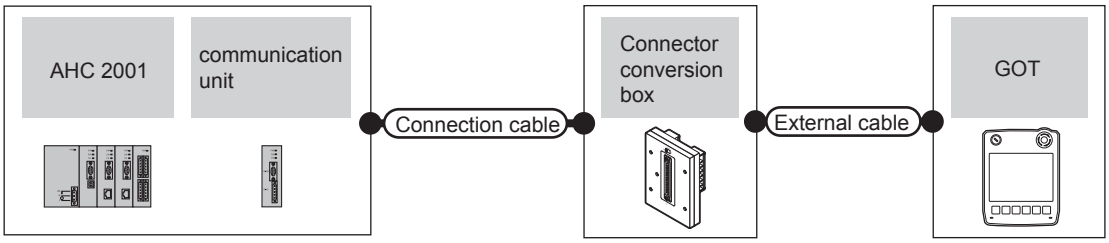

Temperature controller			Connection cable	Connector conversion box	External cable	GOT model	Total distance	Number of connectable equipment
Model	Communication module	Communication type	Cable model Connection diagram number					
AHC2001	-	RS-232	User preparing RS232 connection diagram 4)	GT11H-CNB-37S	GT11H-C30-37P(3m)	GT14 Handy	6m	Up to 1 temperature controller for 1 GOT
	SCU module	RS-232						
	SCU module	RS-422	User preparing RS485 connection diagram 3)	GT11H-CNB-37S	GT11H-C30-37P(3m) GT11H-C60-37P(6m) GT11H-C100-37P(10m)	GT14 Handy	13m	

(2) When using the external cable (GT11H-C□□□-37P)

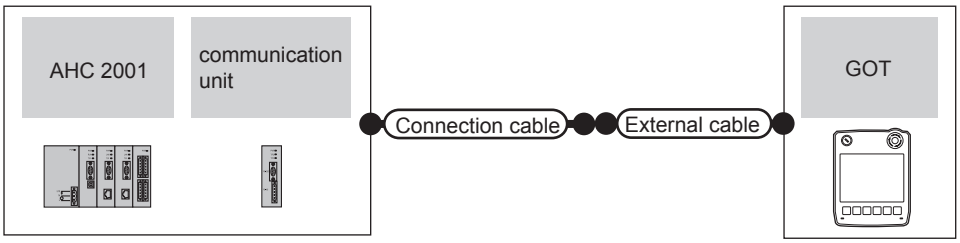

Temperature controller			Connection cable	Connector conversion box	External cable	GOT model	Total distance	Number of connectable equipment
Model	Communication module	Communication type	Cable model Connection diagram number					
AHC2001	-	RS-232	User preparing RS232 connection diagram 5)	GT11H-CNB-37S	GT11H-C30-37P(3m)	GT14 Handy	6m	Up to 1 temperature controller for 1 GOT
	SCU module	RS-232						
	SCU module	RS-422	User preparing RS485 connection diagram 4)	GT11H-CNB-37S	GT11H-C30-37P(3m) GT11H-C60-37P(6m) GT11H-C100-37P(10m)	GT14 Handy	13m	

(3) When using the external cable (GT11H-C□□□)

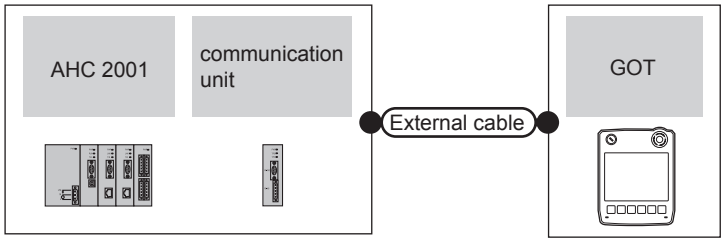

Temperature controller			External cable	GOT model	Total distance	Number of connectable equipment
Model	Communication module	Communication type				
AHC2001	-	RS-232	GT11H-C30(3m) GT11H-C60(6m) (User preparing) RS232 connection diagram 6)	GT14 Handy	6m	Up to 1 temperature controller for 1 GOT
	SCU module	RS-232				
	SCU module	RS-422	GT11H-C30-37P(3m) GT11H-C60-37P(6m) GT11H-C100-37P(10m) (User preparing) RS485 connection diagram 5)	GT14 Handy	13m	

■ When connecting directly to multiple temperature controllers

(1) When using the connector conversion box

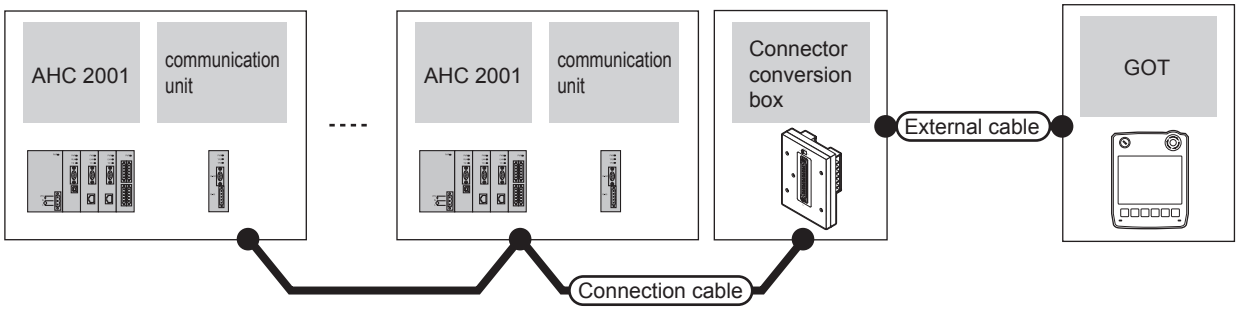

Temperature controller			Connection cable	Connector conversion box	External cable	GOT model	Total distance	Number of connectable equipment
Model	Communication module	Communication type	Cable model Connection diagram number					
AHC2001	SCU module	RS-422	(User preparing) RS485 connection diagram 3)	GT11H-CNB-37S	GT11H-C30-37P(3m) GT11H-C60-37P(6m) GT11H-C100-37P(10m)	GT14 Handy	13m	Up to 31 temperature controller for 1 GOT

(2) When using the external cable (GT11H-C□□□-37P)

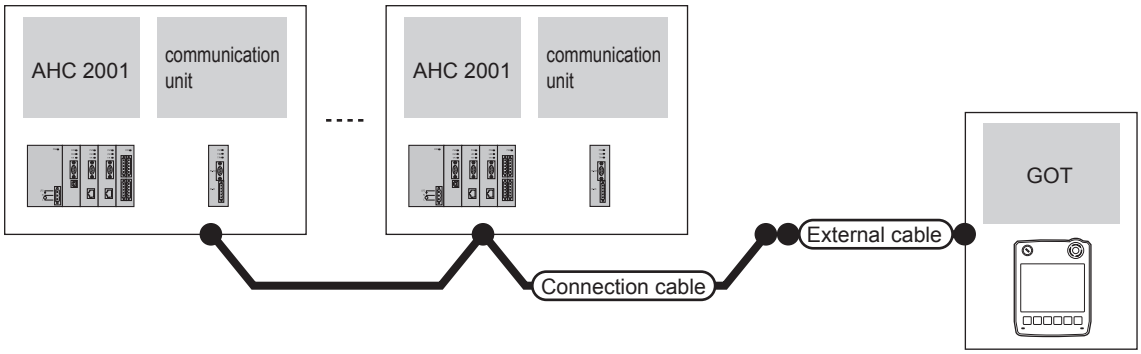

Temperature controller			Connection cable	Connector conversion box	External cable	GOT model	Total distance	Number of connectable equipment
Model	Communication module	Communication type	Cable model Connection diagram number					
AHC2001	SCU module	RS-422	User preparing RS485 connection diagram 4)	GT11H-CNB-37S	GT11H-C30-37P(3m) GT11H-C60-37P(6m) GT11H-C100-37P(10m)	GT14 Handy	13m	Up to 31 temperature controller for 1 GOT

(3) When using the external cable (GT11H-C□□□)

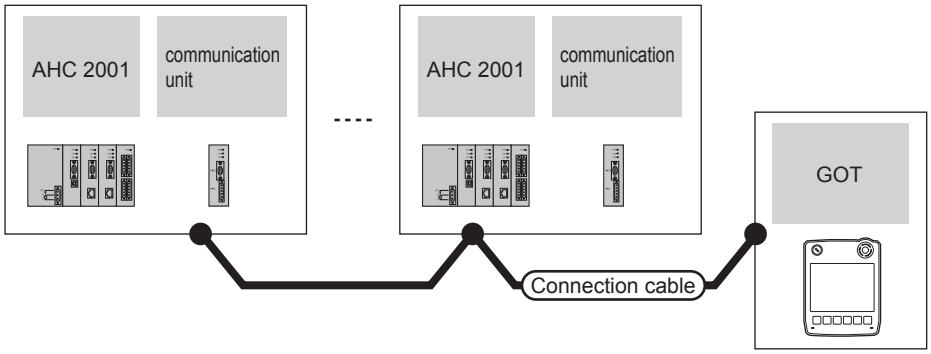

Temperature controller			External cable	GOT model	Total distance	Number of connectable equipment
Model	Communication module	Communication type				
AHC2001	SCU module	RS-422	GT11H-C30-37P(3m) GT11H-C60-37P(6m) GT11H-C100-37P(10m) User preparing RS485 connection diagram 5)	GT14 Handy	13m	Up to 31 temperature controller for 1 GOT

52.2.10 Connecting to NX series

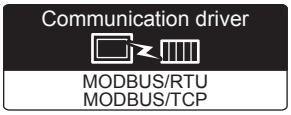

Use a MODBUS(R)/RTU or MODBUS(R)/TCP communication driver to connect the GOT to NX series.
For the MODBUS(R)/RTU or MODBUS(R)/TCP connection, refer to the following manual.

☞ GOT1000 Series Connection Manual (Microcomputer, MODBUS Products, Peripherals) for GT Works3

4. MODBUS(R)/RTU CONNECTION

5. MODBUS(R)/TCP CONNECTION

For the valid devices, refer to the following Technical News.

☞ List of Valid Devices Applicable for GOT1000 Series MODBUSR Connection (GOT-A-0037)

For the Technical News, contact your local distributor.

52.3 Connection Diagram

The following diagram shows the connection between the GOT and the temperature controller.

52.3.1 RS-232 cable

■ Connection diagram

RS232 connection diagram 1)

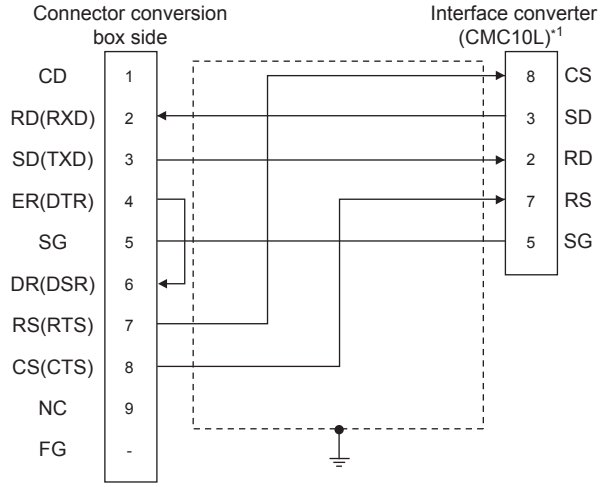

*1 For details on the setting method of the TERMINAL mode, refer to the following.

52.5.5 Connecting to CMC10L

RS232 connection diagram 2)

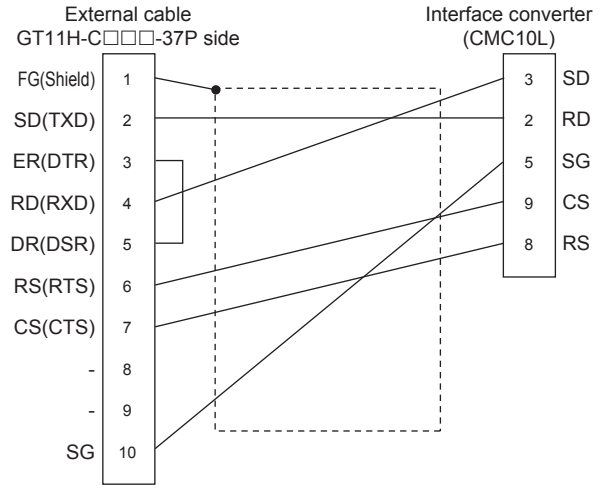

*1 For details on the setting method of the TERMINAL mode, refer to the following.

52.5.5 Connecting to CMC10L

RS232 connection diagram 3)

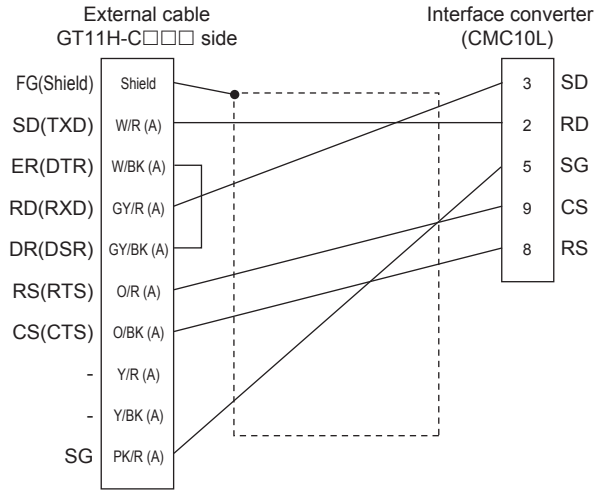

*1 For details on the setting method of the TERMINAL mode, refer to the following.

52.5.5 Connecting to CMC10L

RS232 connection diagram 4)

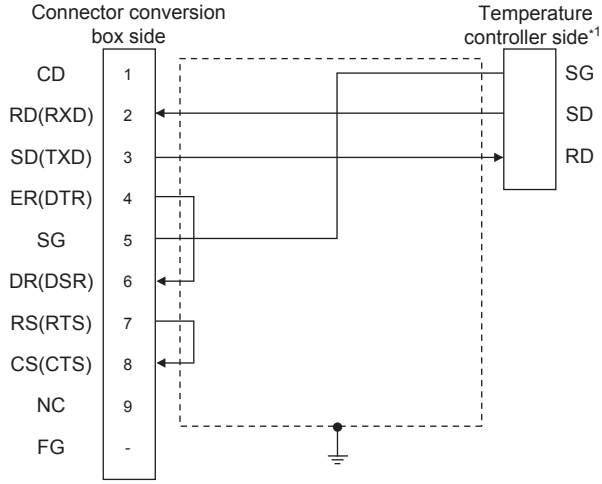

*1 Pin No. of temperature controller differs depending on model and optional function model.
Refer to the following table. The numbers in ( ) of the following table correspond to optional function models.

Signal name	Model of temperature controller					
	SDC20		SDC21	SDC40A, SDC40B, SDC40G	AHC2001	
	(03, 05)	(10)	(04, 07, 09)		CPU module	SCU module
	Pin No.	Pin No.	Pin No.	Pin No.	Pin No.	Pin No.
SG	5	18	29	61	5	5
SD	17	16	27	60	3	3
RD	18	17	28	59	2	2

RS232 connection diagram 5)

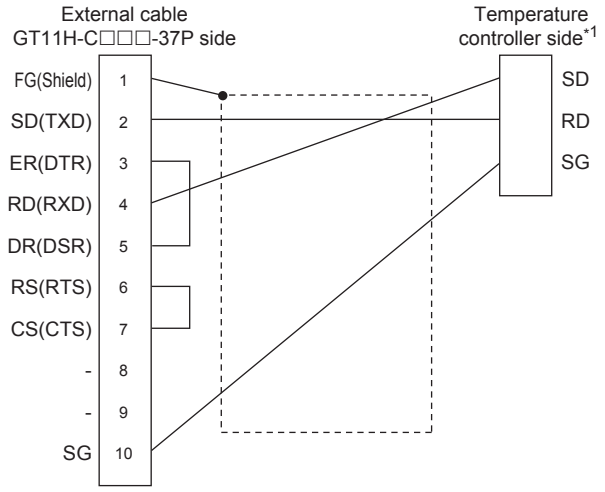

*1 Pin No. of temperature controller differs depending on model and optional function model.
Refer to the following table. The numbers in ( ) of the following table correspond to optional function models.

Signal name	Model of temperature controller					
	SDC20		SDC21	SDC40A, SDC40B, SDC40G	AHC2001	
	(03, 05)	(10)	(04, 07, 09)		CPU module	SCU module
	Pin No.	Pin No.	Pin No.	Pin No.	Pin No.	Pin No.
SG	5	18	29	61	5	5
SD	17	16	27	60	3	3
RD	18	17	28	59	2	2

RS232 connection diagram 6)

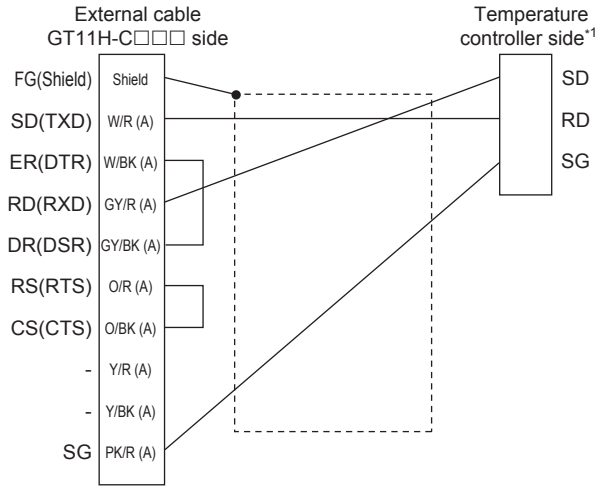

*1 Pin No. of temperature controller differs depending on model and optional function model.
Refer to the following table. The numbers in ( ) of the following table correspond to optional function models.

Signal name	Model of temperature controller					
	SDC20		SDC21	SDC40A, SDC40B, SDC40G	AHC2001	
	(03, 05)	(10)	(04, 07, 09)		CPU module	SCU module
	Pin No.	Pin No.	Pin No.	Pin No.	Pin No.	Pin No.
SG	5	18	29	61	5	5
SD	17	16	27	60	3	3
RD	18	17	28	59	2	2

■ Precautions when preparing a cable

(1) Cable length
The total distance (between the GOT and a controller) of RS-232 cable must be 6m or less.

(2) Connector conversion box side connector
For the connector conversion box side connector, refer to the following.
☞ 6.6 Connector Conversion Box

(3) External cable side connector
For the connector specifications of the external cable side, refer to the following.
☞ 8.2 External Cable, Relay Cable

(4) AZBIL control equipment side connector
Use the connector compatible with the AZBIL control equipment side module.
For details, refer to the user's manual of the AZBIL control equipment.

52.3.2 RS-485 cable

■ Connection diagram

RS485 connection diagram 1)

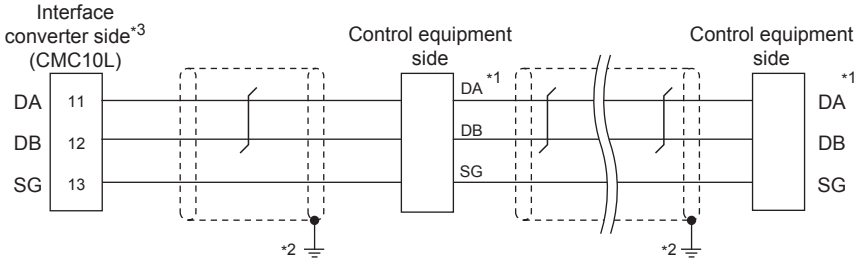

*1 Pin No. of control equipment differs depending on the model. Refer to the following table.

Signal name	Model of control equipment			
	DMC10	SDC15	SDC25/26 SDC35/36	AUR350C AUR450C
	Pin No.	Pin No.	Pin No.	Pin No.
DA	4	16	22	DA
DB	5	17	23	DB
SG	6	18	24	SG

*2 Connect FG grounding to the single-sided end of a cable shield line.

*3 Set the terminal resistor to "Disable".
For details of terminating resistor settings, refer to the following.

52.5.5 Connecting to CMC10L

RS485 connection diagram 2)

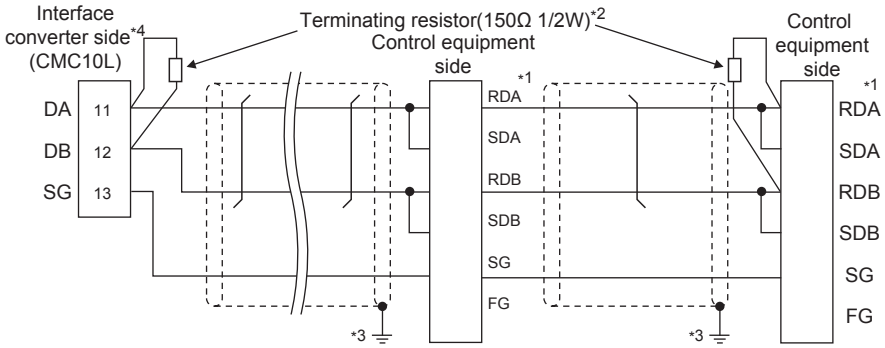

*1 Pin No. of control equipment differs depending on model and optional function model. Refer to the following table. The numbers in ( ) of the following table correspond to optional function models.

Signal name	Model of control equipment									
	SDC20		SDC21	SDC30	SDC31		SDC40A/ 40B/40G	CMF050 CML	PBC201- VN2	CMC10B
	(02) (04)	(09)	(03) (06) (08)	(040) (041)	(045)	(446) (546)				
	Pin No.	Pin No.	Pin No.	Pin No.	Pin No.	Pin No.	Pin No.	Pin No.	Pin No.	Pin No.
RDA	17	18	27	18	18	27	59	7	14	13
RDB	18	19	28	19	19	28	60	8	15	14
SDA	15	16	25	16	16	25	57	9	12	11
SDB	16	17	26	17	17	26	58	10	13	12
SG	5	5	29	5	5	29	61	12	16	15
FG	3, 4	3, 4	3, 4	3, 4	3, 4	3, 4	3	19	3	-

*2 Terminating resistors should be provided for an Interface converter and control equipment which will be terminals.

*3 Connect FG grounding to the single-sided end of a cable shield line.

*4 Since the Interface converter has a built-in terminating resistor, set the terminating resistor of GOT to "Enable".
For details of terminating resistor settings, refer to the following.

52.5.5 Connecting to CMC10L

RS485 connection diagram 3)

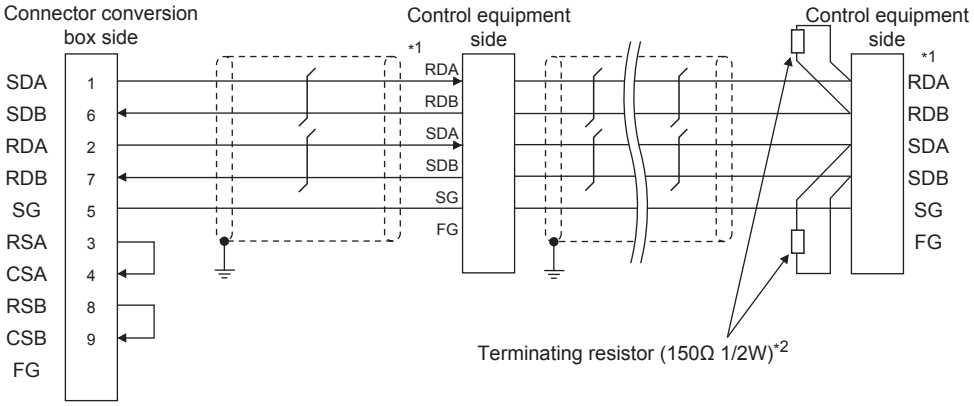

*1 Pin No. of control equipment differs depending on model and optional function model.
Refer to the following table. The numbers in ( ) of the following table correspond to optional function models.

Signal name	Model of control equipment						
	SDC20		SDC21	SDC30	SDC31		SDC40A/40B/40G
	(02, 04)	(09)	(03, 06, 08)	(040, 041)	(045)	(446, 546)	
	Pin No.	Pin No.	Pin No.	Pin No.	Pin No.	Pin No.	Pin No.
RDA	17	18	27	18	18	27	59
RDB	18	19	28	19	19	28	60
SDA	15	16	25	16	16	25	57
SDB	16	17	26	17	17	26	58
SG	5	5	29	5	5	29	61
FG	3, 4	3, 4	3, 4	3, 4	3, 4	3, 4	3

Signal name	Model of control equipment			
	CMF050 CML	PBC201-VN2	CMC10B	AHC2001 SCU module
	Pin No.	Pin No.	Pin No.	Pin No.
RDA	7	14	13	3
RDB	8	15	14	2
SDA	9	12	11	5
SDB	10	13	12	4
SG	12	16	15	1
FG	19	3	-	-

*2 Terminating resistor should be provided for control equipment which will be a terminal.
*3 Connect FG grounding to the single-sided end of a cable shield line.

RS485 connection diagram 4)

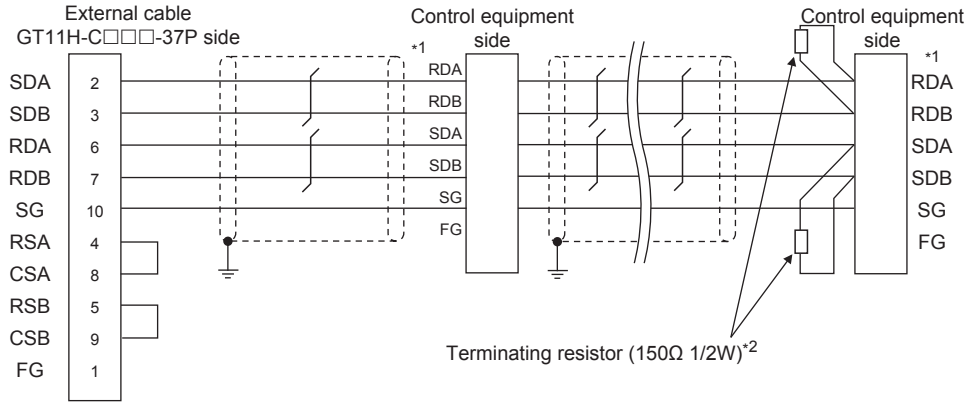

*1 Pin No. of control equipment differs depending on model and optional function model.
Refer to the following table. The numbers in ( ) of the following table correspond to optional function models.

Signal name	Model of control equipment						
	SDC20		SDC21	SDC30	SDC31		SDC40A/40B/40G
	(02, 04)	(09)	(03, 06, 08)	(040, 041)	(045)	(446, 546)	
	Pin No.	Pin No.	Pin No.	Pin No.	Pin No.	Pin No.	Pin No.
RDA	17	18	27	18	18	27	59
RDB	18	19	28	19	19	28	60
SDA	15	16	25	16	16	25	57
SDB	16	17	26	17	17	26	58
SG	5	5	29	5	5	29	61
FG	3, 4	3, 4	3, 4	3, 4	3, 4	3, 4	3

Signal name	Model of control equipment			
	CMF050 CML	PBC201-VN2	CMC10B	AHC2001 SCU module
	Pin No.	Pin No.	Pin No.	Pin No.
RDA	7	14	13	3
RDB	8	15	14	2
SDA	9	12	11	5
SDB	10	13	12	4
SG	12	16	15	1
FG	19	3	-	-

*2 Terminating resistor should be provided for control equipment which will be a terminal.

*3 Connect FG grounding to the single-sided end of a cable shield line.

RS485 connection diagram 5)

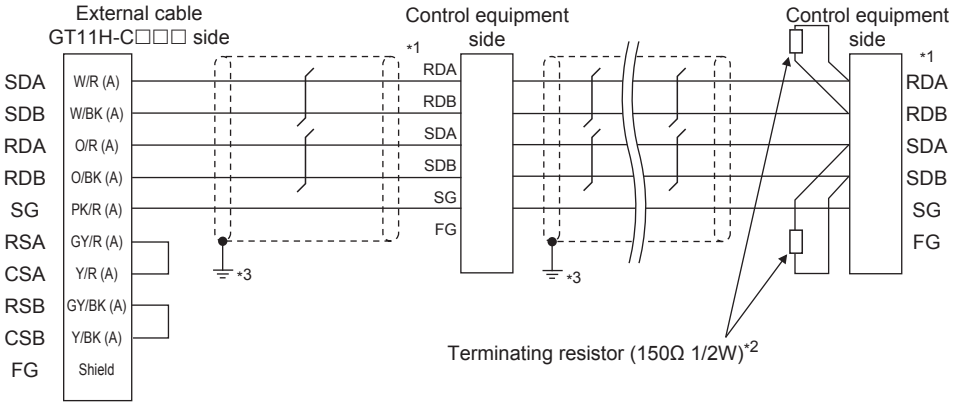

*1 Pin No. of control equipment differs depending on model and optional function model.
Refer to the following table. The numbers in ( ) of the following table correspond to optional function models.

Signal name	Model of control equipment						
	SDC20		SDC21	SDC30	SDC31		SDC40A/40B/40G
	(02, 04)	(09)	(03, 06, 08)	(040, 041)	(045)	(446, 546)	
	Pin No.	Pin No.	Pin No.	Pin No.	Pin No.	Pin No.	Pin No.
RDA	17	18	27	18	18	27	59
RDB	18	19	28	19	19	28	60
SDA	15	16	25	16	16	25	57
SDB	16	17	26	17	17	26	58
SG	5	5	29	5	5	29	61
FG	3, 4	3, 4	3, 4	3, 4	3, 4	3, 4	3

Signal name	Model of control equipment			
	CMF050 CML	PBC201-VN2	CMC10B	AHC2001 SCU module
	Pin No.	Pin No.	Pin No.	Pin No.
RDA	7	14	13	3
RDB	8	15	14	2
SDA	9	12	11	5
SDB	10	13	12	4
SG	12	16	15	1
FG	19	3	-	-

*2 Terminating resistor should be provided for control equipment which will be a terminal.

*3 Connect FG grounding to the single-sided end of a cable shield line.

RS485 connection diagram 6)

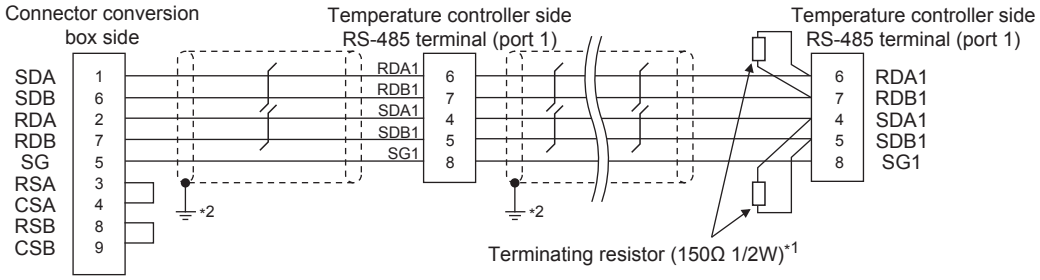

*1 Terminating resistor should be provided for a temperature controller which will be a terminal.

*2 Connect FG grounding to the single-sided end of a cable shield line.

RS485 connection diagram 7)

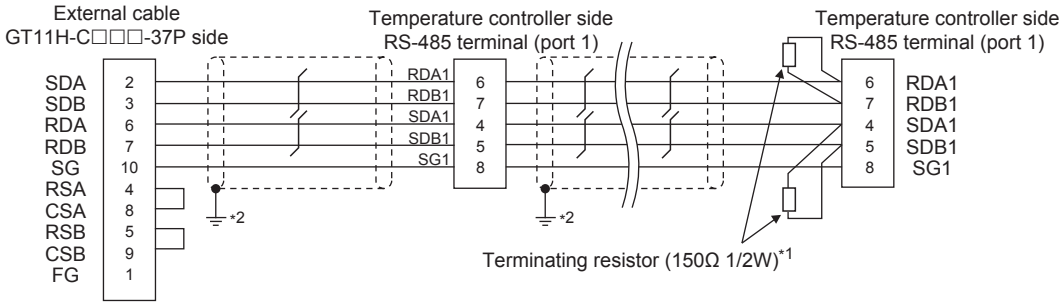

*1 Terminating resistor should be provided for a temperature controller which will be a terminal.

*2 Connect FG grounding to the single-sided end of a cable shield line.

RS485 connection diagram 8)

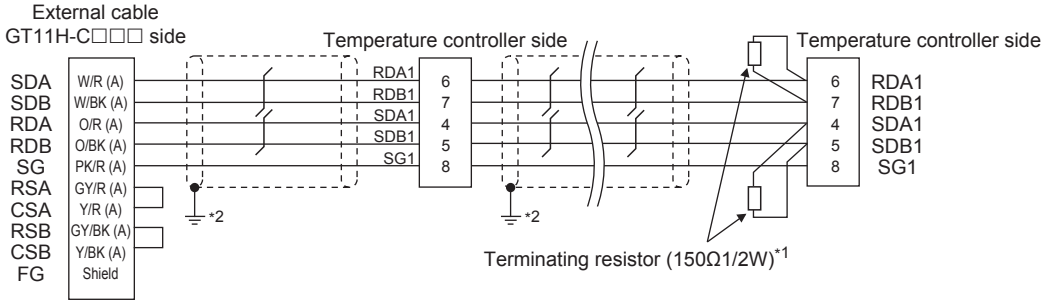

*1 Terminating resistor should be provided for a temperature controller which will be a terminal.

*2 Connect FG grounding to the single-sided end of a cable shield line.

RS485 connection diagram 9)

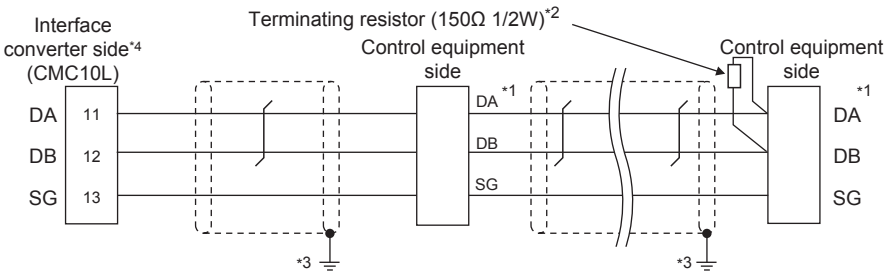

*1 Pin No. of control equipment differs depending on the model. Refer to the following table.

Signal name	Model of control equipment				
	SDC45/46	CMS CMF015	MQV MPC	MVF	RX
	Pin No.	Pin No.	Pin No.	Pin No.	Pin No.
DA	C10	5	7	1	1
DB	C11	6	8	2	2
SG	C12	10	9	7	3

*2 Terminating resistors should be provided for an Interface converter and control equipment which will be terminals.

*3 Connect FG grounding to the single-sided end of a cable shield line.

*4 Since the Interface converter has a built-in terminating resistor, set the terminating resistor of GOT to "Enable". For details of terminating resistor settings, refer to the following.

52.5.5 Connecting to CMC10L

■ Precautions when preparing a cable

(1) Cable length

(a) The length of the RS-485 cable used for connecting the control equipment to the communication converter
The length of the RS-485 cable must be 500m or less.

(b) The length of the RS-485 cable used for connecting the connected equipment to the GOT.
The total distance (between GOT and controllers) of RS-485 cable must be 13m or less.

(2) Connector conversion box side connector
For the connector conversion box side connector, refer to the following.

6.6 Connector Conversion Box

(3) External cable side connector
For the connector specifications of the external cable side, refer to the following.

8.2 External Cable, Relay Cable

(4) AZBIL control equipment side connector
Use the connector compatible with the AZBIL control equipment side module.
For details, refer to the user's manual of the AZBIL control equipment.

■ Connecting terminating resistors

(1) AZBIL control equipment side
When connecting an AZBIL control equipment to the GOT, a terminating resistor must be connected.

52.5 Control Equipment Side Setting

52.4 GOT Side Settings

52.4.1 Setting communication interface (Communication settings)

Set the channel of the connected equipment.

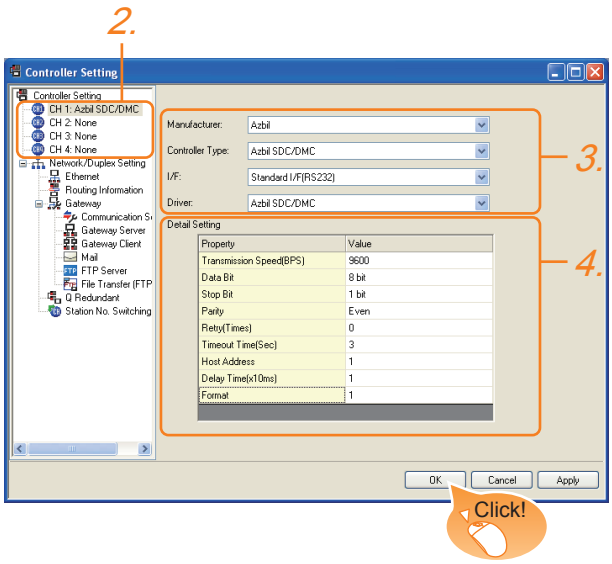

1. Select [Common] → [Controller Setting] from the menu.

2. The Controller Setting window is displayed. Select the channel to be used from the list menu.

3. Set the following items.
   - Manufacturer: Azbil
   - Controller Type: Set as follows.
     <When connecting to DMC50 and AHC2001>
     Azbil DMC50
     <When connecting to a module other than the above>
     Azbil SDC/DMC
   - I/F: Interface to be used
   - Driver: Azbil SDC/DMC

4. The detailed setting is displayed after Manufacturer, Controller Type, I/F, and Driver are set.
   Make the settings according to the usage environment.
   52.4.2 Communication detail settings

Click the OK button when settings are completed.

POINT

The settings of connecting equipment can be confirmed in [I/F Communication Setting].
For details, refer to the following.
18.1.2 I/F communication setting

52.4.2 Communication detail settings

Item	Description	Range
Transmission Speed	Set this item when change the transmission speed used for communication with the connected equipment. (Default: 9600bps)	9600bps, 19200bps, 38400bps, 57600bps, 115200bps
Data Bit	Set this item when change the data length used for communication with the connected equipment. (Default: 8bit)	7bit/8bit
Stop Bit	Specify the stop bit length for communications. (Default: 1bit)	1bit/2bits
Parity	Specify whether or not to perform a parity check, and how it is performed during communication. (Default: Even)	None Even Odd
Retry	Set the number of retries to be performed when a communication error occurs. (Default: 0time)	0 to 5times
Timeout Time	Set the time period for a communication to time out. (Default: 3sec)	3 to 30sec
Host Address*3*4	Specify the host address (station No. of the GOT to which the temperature controller is connected) in the connected network. (Default: 1)	1 to 15
Delay Time	Set this item to adjust the transmission timing of the communication request from the GOT. *1 (Default: 1ms)	0 to 300ms
Format*2	Select the communication format. (Default: 1) format 1: only continuous access format 2: continuous access and random access	1/2

*1 Do not specify "0".
*2 Format is ignored when connecting to DMC50.
*3 Host Address is ignored when connecting to DMC10 or SDC.
*4 Host Address is valid when connecting to DMC50.
Devices to be the target of Host Address setting differ depending on the system configuration.
- When connecting to the temperature controller via COM module
  Specify the station No. of the COM module.
- When connecting to the temperature controller directly
  Specify the station No. of the temperature controller.

POINT

(1) Format setting
The compatible format of temperature controller differs depending on model.

Model	Compatible format
SDC20/21, SDC30/31, SDC40A/40B/40G, CMS, CMF, CML, MQV, MPC, MVF, PBC201-VN2, RX	Format 1 only
DMC10, SDC15, SDC25/26, SDC35/36, SDC45/46, AUR350C, AUR450C, CMC10B	Format 1 or Format 2
DMC50, AHC2001	The format setting is invalid.

For the continuous access and random access of the control equipment, refer to the following manual.

☞ User's Manual of the AZBIL control equipment

(2) Communication interface setting by Utility
The communication interface setting can be changed on the Utility's [Communication setting] after writing [Communication Settings] of project data.
For details on the Utility, refer to the following manual.

☞ 11. COMMUNICATION INTERFACE SETTING (COMMUNICATION SETTING)

(3) Precedence in communication settings
When settings are made by GT Designer3 or the Utility, the latest setting is effective.

52.5 Control Equipment Side Setting

POINT

AZBIL control equipment

For details of AZBIL control equipment, refer to the following manual.

☞ User's Manual of the AZBIL control equipment

Model		Refer to
Control equipment	DMC10	52.5.1
	DMC50	52.5.6
	SDC15, SDC25/26, SDC35/36	52.5.3
	SDC20/21	52.5.4
	SDC30/31	52.5.4
	SDC40A/40B/40G	52.5.2
	SDC45/46	52.5.7
	CMS, CMF015	52.5.8
	CML, CMF050	52.5.9
	MQV	52.5.10
	MPC	52.5.11
	PBC201-VN2	52.5.12
	MVF	52.5.13
	AUR350C, AUR450C	52.5.14
	RX	52.5.15
	CMC10B	52.5.16
	AHC2001 CPU module	52.5.17
	AHC2001 SCU module	52.5.18
Interface converter	CMC10L	52.5.5

52.5.1 Connecting to DMC10

■ Communication settings

Make the communication settings by operating the Smart Loader Package (SLP-D10) of the temperature controller.

Item	Set value
Transmission speed*1	9600bps, 19200bps
Communication mode*2	CPL
Data bit	8bits
Parity bit*1	Even, none
Stop bit	2bits
Communication minimum response time	1ms, 10ms, 100ms, 200ms
Station address*3*4	0 to F

*1 Adjust the settings with GOT settings.
*2 Set to CPL.
*3 Do not set to "0".
*4 Select the station address without overlapping with that of other units.

■ Station address setting

Set the station address using the rotary switch for the station address.

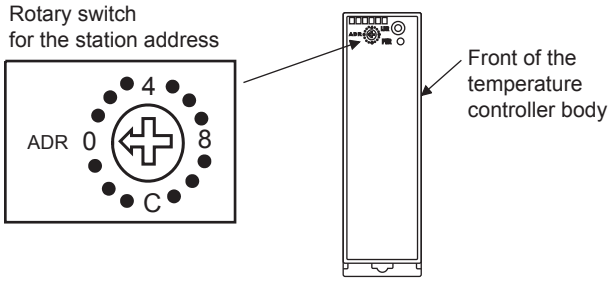

52.5.2 Connecting to SDC40A/40B/40G

■ Communication settings

Make the communication settings by operating the key of the temperature controller.

Item	Set value
Transmission speed*1	9600bps
Data bit	8bits
Parity bit*1	Even, none
Stop bit	1bit, 2bits
Station address*2*3	0 to 127

*1 Set the same transmission speed as that of the GOT side.
*2 Do not set to "0".
*3 Select the station address without overlapping with that of other units.

52.5.3 Connecting to SDC15, SDC25/26 or SDC35/36

■ Communication settings

Make the communication settings by operating the key or Smart Loader Package (SLP-C35) of the temperature controller.

Item	Set value
Transmission speed*1	9600bps, 19200bps
Communication mode*2	CPL
Data bit*1	7bits, 8bits
Parity bit*1	Odd, even, none
Stop bit*1	1bit, 2bits
Communication minimum response time	1 to 250ms
Station address*3*4	0 to 127

*1 Set the same transmission speed as that of the GOT side.
*2 Set to CPL.
*3 Do not set to "0".
*4 Select the station address without overlapping with that of other units.

52.5.4 Connecting to SDC20/21, SDC30/31

■ Communication settings

Make the communication settings by operating the key of the temperature controller.

Item	Set value
Transmission speed*1	9600bps
Data bit	8bits
Parity bit	Disable
Stop bit	2bits
Station address*2*3	0 to 127

*1 Set the same transmission speed as that of the GOT side.
*2 Do not set to "0".
*3 Select the station address without overlapping with that of other units.

52.5.5 Connecting to CMC10L

■ Communication settings

Make the communication settings by operating the DIP switch of the control equipment.

Item	Set value
Transmission speed*1	9600bps, 19200bps, 38400bps
Frame length*2	9 to 15bits

*1 Set the same transmission speed as that of the GOT side.
*2 The sum of data length, parity bit and stop bit

■ Settings by switch

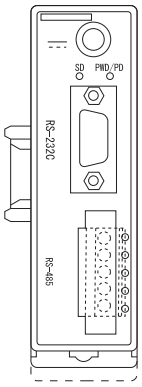

Front view of CMC10L body

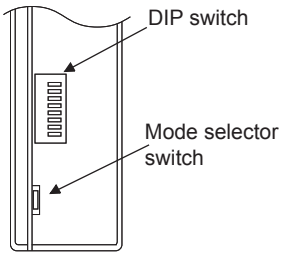

Rear view of CMC10L body

(1) Setting DIP switches

(a) Transmission speed settings

Transmission speed (bps)	Switch No.		
	1	2	3
9600	ON	OFF	ON
19200	OFF	ON	ON
38400	ON	ON	ON

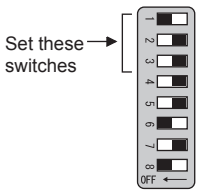

(b) Frame length settings

Frame length	Switch No.		
	4	5	6
8bits	OFF	OFF	OFF
9bits	ON	OFF	OFF
10bits	OFF	ON	OFF
11bits	ON	ON	OFF
12bits	OFF	OFF	ON
13bits	ON	OFF	ON
14bits	OFF	ON	ON
15bits	ON	ON	ON

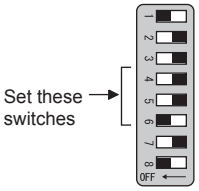

(c) Connecting terminating resistors

Terminating resistor	Switch No.
	8
Enable	ON
Disable	OFF

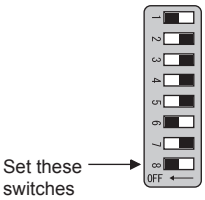

(2) Mode selector switch settings

Set the switch to "TERMINAL".

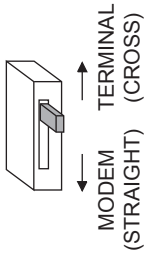

52.5.6 Connecting to DMC50

■ Communication settings

Make the communication settings by operating the Smart Loader Package (SLP-D50/SLP-H21)of the temperature controller.

Item	Set value
Transmission speed*1	9600bps, 19200bps, 38400bps
Communication mode	CPL
Data bit	8bits (fixed)
Parity bit	Even (fixed)
Stop bit	1bit (fixed)
Station address*2*3*4	0 to F

*1 Adjust the settings with GOT settings.
*2 Set the station address using the rotary switch for the station address.
*3 Do not set to "0".
*4 Select the station address without overlapping with that of other units.

■ Station address setting

Set the station address using the rotary switch for the station address.

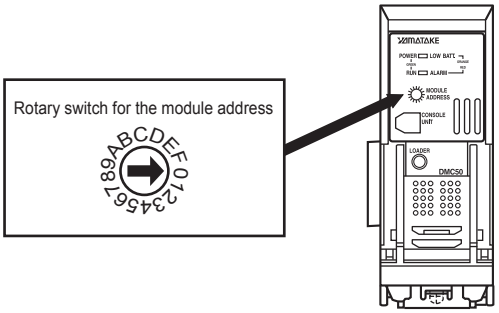

52.5.7 Connecting to SDC45/46

■ Communication settings

Make the communication settings by operating the Smart Loader Package (SLP-C45) of the temperature controller.

Item	Set value
Transmission speed*1	9600bps ,19200bps, 38400bps
Communication mode*2	CPL
Data bit	7bits, 8bits
Parity bit*1	Even, Odd, None
Stop bit	1bit, 2bits
Communication minimum response time*5	1 to 250ms
Station address*3*4	0 to 120

*1 Adjust the settings with GOT settings.
*2 Set to CPL.
*3 Do not set to "0".
*4 Select the station address without overlapping with that of other units.
*5 When using the interface converter CMC10L, set the communication minimum response time to 3ms or more.

52.5.8 Connecting to CMS, CMF015

■ Communication settings

Make the communication settings by operating the key of the control equipment.

Item	Set value
Transmission speed*1	9600bps
Communication condition selection	0: 8-bit data length, Even parity, Stop bit 1
	1: 8-bit data length, Non parity, Stop bit 2
Station address*2*3	0 to 99

*1 Adjust the settings with GOT settings.
*2 Do not set to "0".
*3 Select the station address without overlapping with that of other units.

52.5.9 Connecting to CML, CMF050

■ Communication settings

Make the communication settings by operating the key of the control equipment.

Item	Set value
Transmission speed*1	9600bps
Communication condition selection*1	00: 8-bit data length, Even parity, Stop bit 1
	01: 8-bit data length, Non parity, Stop bit 2
Station address*2*3	0 to 7F

*1 Adjust the settings with GOT settings.
*2 Do not set to "0".
*3 Select the station address without overlapping with that of other units.

52.5.10 Connecting to MQV

■ Communication settings

Make the communication settings by operating the key of the control equipment.

Item	Set value
Transmission speed*1	9600bps ,19200bps, 38400bps
Communication condition selection*1	00: 8-bit data length, Even parity, Stop bit 1
	01: 8-bit data length, Non parity, Stop bit 2
Station address*2*3	0 to 127

*1 Adjust the settings with GOT settings.
*2 Do not set to "0".
*3 Select the station address without overlapping with that of other units.

52.5.11 Connecting to MPC

■ Communication settings

Make the communication settings by operating the key of the control equipment.

Item	Set value
Transmission speed*1	9600bps ,19200bps, 38400bps
Communication condition selection*1	0: 8-bit data length, Even parity, Stop bit 1
	1: 8-bit data length, Non parity, Stop bit 2
Station address*2*3	0 to 127

*1 Adjust the settings with GOT settings.
*2 Do not set to "0".
*3 Select the station address without overlapping with that of other units.

52.5.12 Connecting to PBC201-VN2

■ Communication settings

Make the communication settings by operating the key of the control equipment.

Item	Set value
Communication protocol	CPL
Transmission speed*1	9600bps ,19200bps, 38400bps 115200bps
Communication condition selection*1 (Fixed 8-bit data length)	0: Even parity, Stop bit 1
	1: Odd parity, Stop bit 1
	2: Non parity, Stop bit 2
Station address*2*3	0 to 126

*1 Adjust the settings with GOT settings.
*2 Do not set to "0".
*3 Select the station address without overlapping with that of other units.

52.5.13 Connecting to MVF

■ Communication settings

Make the communication settings by operating the switch of the control equipment.

Item	Set value
Transmission speed*1	9600bps, 19200bps
Communication condition selection*1	8-bit data length, Even parity, Stop bit 1
	8-bit data length, Non parity, Stop bit 2
Station address*2*3	0 to F

*1 Adjust the settings with GOT settings.
*2 Do not set to "0".
*3 Select the station address without overlapping with that of other units.

■ Settings by switch

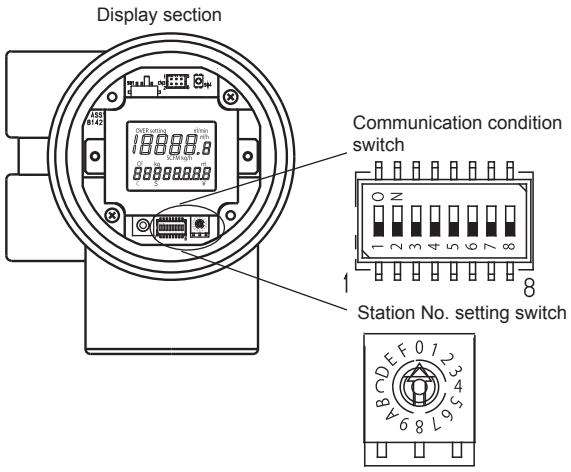

(1) Transmission speed settings
Set the communication condition switch.

Transmission speed (bps)	Switch No.		
	1	2	3
9600	ON	ON	OFF
19200	ON	OFF	OFF

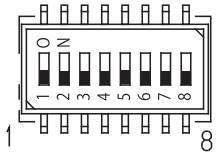

(2) Communication condition selection
Set the communication condition switch.

Communication condition	Switch No.
	4
8-bit data length, Even parity, Stop bit 1	OFF
8-bit data length, Non parity, Stop bit 2	ON

(3) Station address setting
Set the station address switch.

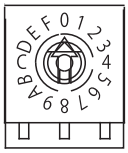

52.5.14 Connecting to AUR350C, AUR450C

■ Communication settings

Make the communication settings by operating the Smart Loader Package (SLP-A35, SLP-A45) of the control equipment.

Item	Set value
Transmission speed*1	9600bps, 19200bps
Communication condition selection*1	8-bit data length, Even parity, Stop bit 1
	8-bit data length, Non parity, Stop bit 2
Station address*2*3	0 to F

*1 Adjust the settings with GOT settings.
*2 Do not set to "0".
*3 Select the station address without overlapping with that of other units.

■ Station address setting

Set the station address switch.

(1) For AUR350C

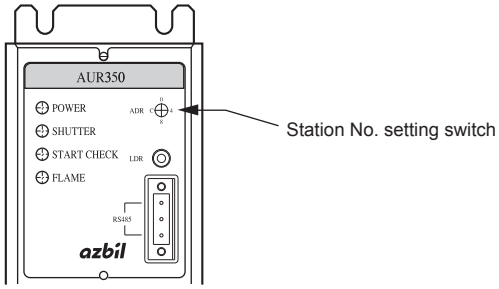

(2) For AUR450C

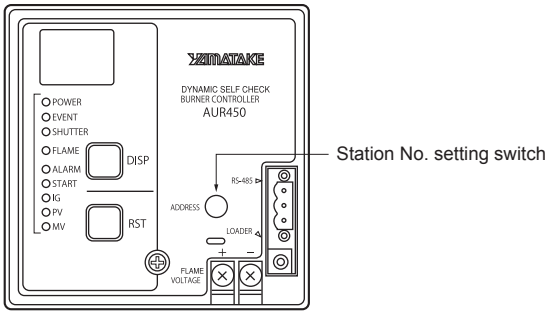

52.5.15 Connecting to RX

■ Communication settings

Make the communication settings by operating the Smart Loader Package (SLP-RX) of the control equipment.

Item	Set value
Transmission speed*1	9600bps, 19200bps, 38400bps
Communication condition selection*1	Even parity stop 1 (8-bit data length, Even parity, Stop bit 1)
	Even parity stop 2 (8-bit data length, Even parity, Stop bit 2)
	Odd parity stop 1 (8-bit data length, Odd parity, Stop bit 1)
	Odd parity stop 2 (8-bit data length, Odd parity, Stop bit 2)
Station address*2*3	1 to 32

*1 Adjust the settings with GOT settings.
*2 Do not set to "0".
*3 Select the station address without overlapping with that of other units.

52.5.16 Connecting to CMC10B

■ Communication settings

Make the communication settings by operating the Smart Loader Package (SLP-CM1) of the control equipment.

Item	Set value
Transmission speed*1	9600bps, 19200bps
Communication format*1	0: 8-bit data length, Even parity, Stop bit 1
	1: 8-bit data length, Non parity, Stop bit 2
Station address*2*3	0 to 99

*1 Adjust the settings with GOT settings.
*2 Do not set to "0".
*3 Select the station address without overlapping with that of other units.

■ Station address setting

Set the station address switch.

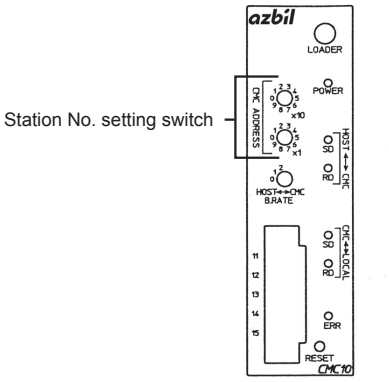

52.5.17 Connecting to AHC2001 CPU module

■ Communication settings

Make the communication settings by operating the key of the temperature controller or Smart Loader Package (SLP-D50 or SLP-H21).

Item	Set value
Transmission speed*1	9600bps, 19200bps, 38400bps, 57600bps
Mode*2	1:CPL
Data bit	8bits (fixed)
Parity bit	Even (fixed)
Stop bit	1bit (fixed)
Station address*3	1 to 15*4

*1 The transmission speed setting must be consistent with that of the GOT side.
*2 Set to 1:CPL.
*3 Select the station address without overlapping with that of other units.
*4 Although the device address range of AHC2001 is 1 to 127, use the device setting range of DMC50 of 1 to 15.

52.5.18 Connecting to AHC2001 SCU module

■ Communication settings

Make the communication settings by operating the key of the temperature controller or Smart Loader Package (SLP-D50 or SLP-H21).

Item	Set value
Transmission speed*1	9600bps, 19200bps, 38400bps
Protocol setting*2	2:CPL
Data bit*1	7bits, 8bits
Parity bit*1	0: None, 1: Even, 2: Odd
Stop bit*1	1bit, 2bits
Half-duplex/Duplex*3	0: Half-duplex
Spacing transmission	0 (fixed)

*1 Adjust the settings of transmission speed, data length, parity bit, and stop bit with that of the GOT.
*2 Set to 2:CPL.
*3 Set to 0: Half-duplex.

52.5.19 Station number setting

Set each station number so that no station number overlaps. The station number can be set without regard to the cable connection order. There is no problem even if station numbers are not consecutive.

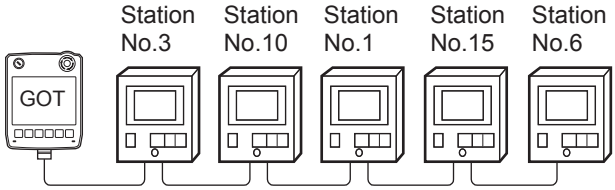

Examples of station number setting

(1) Direct specification

When setting the device, specify the station number of the control equipment of which data is to be changed.

Model	Specification range
SDC40A/40B/40G, SDC15, SDC25/26, SDC35/36, SDC20/21, SDC30/31, CML, CMF050, MQV, MPC	1 to 127
PBC201-VN2	1 to 126
SDC45/46	1 to 120
CMS, CMF015, CMC10B	1 to 99
RX	1 to 32
DMC10, DMC50, MVF, AUR350C, AUR450C, AHC2001*1	1 to 15

*1 Although the station number range of AHC2001 is 1 to 127, use the station number range of DMC50 of 1 to 15.

(2) Indirect specification

When setting the device, indirectly specify the station number of the control equipment of which data is to be changed using the 16-bit GOT internal data register (GD10 to GD25).
When specifying the station No. shown in the table below on GT Designer3, the value of GD10 to GD25 compatible to the station No. specification will be the station No. of the control equipment.

Specification station No.		Compatible device	Setting range
DMC50 AHC2001	Except DMC50		
100	200	GD10	1 to 127: SDC40A/40B/40G, SDC15, SDC25/26, SDC35/36, SDC20/21, SDC30/31, CML, CMF050, MQV, MPC 1 to 126: PBC201-VN2 1 to 120: SDC45/46 1 to 99: CMS, CMF015, CMC10B 1 to 32: RX 1 to 15: DMC10, DMC50, MVF, AUR350C, AUR450C, AHC2001*1 For the setting other than the above, an error (dedicated device is out of range) will occur.
101	201	GD11	
102	202	GD12	
103	203	GD13	
104	204	GD14	
105	205	GD15	
106	206	GD16	
107	207	GD17	
108	208	GD18	
109	209	GD19	
110	210	GD20	
111	211	GD21	
112	212	GD22	
113	213	GD23	
114	214	GD24	
115	215	GD25	

*1 Although the station number range of AHC2001 is 1 to 127, use the station number range of DMC50 of 1 to 15.

52.6 Device Range that Can Be Set

For details on the device range of controllers that can be used on GT14 Handy, refer to the following manuals.

☞ GT Designer3 Version1 Screen Design Manual (Fundamentals)

☞ GOT1000 Series Connection Manual (Non-Mitsubishi Products 2) for GT Works3

52.7 Precautions

■ Station number setting of the temperature controller system

- When connecting to DMC10 or SDC
  Make sure to establish temperature controller system with No.1 station.
- When connecting to DMC50/AHC2001
  A COM module or temperature controller with the station number set with the host address must be included.

☞ 52.4.2 Communication detail settings

■ GOT clock control

Since the control equipment does not have a clock function, the settings of "time adjusting" or "time broad cast" by GOT clock control will be disabled.

■ Cutting the portion of multiple connection of the controller

By setting GOT internal device, GOT can cut the portion of multiple connection of the controller. For example, faulty station that has communication timeout can be cut from the system.
For details of the setting contents of GOT internal device, refer to the following manual.

☞ GT Designer3 Version1 Screen Design Manual

■ Combination use of DMC50/AHC2001 and DMC10/SDC

GOT does not support connections with DMC50 and DMC10/SDC mixed.

■ Station number range of AHC2001

Although the station number range of AHC2001 is 1 to 127, use the station number range of DMC50 of 1 to 15.

■ Device range of AHC2001

The GOT does not support all the devices of AHC2001.
Use AHC2001 with the GOT within the device range equivalent to that of DMC50.

53. CONNECTION TO RKC TEMPERATURE CONTROLLER

53.1 Connectable Model List

The following table shows the connectable models.

Series	Model name*1	Clock	Communication type	GT14 Handy	Refer to
SR Mini HG	H-PCP-J	×	RS-232 RS-422	○	53.2.1
	H-PCP-A	×	RS-232 RS-422	○	53.2.2
	H-PCP-B				
SRZ	Z-TIO	×	RS-232 RS-422	○	53.2.3
	Z-DIO				
	Z-CT				
CB	CB100	×	RS-232	○	53.2.4
	CB400				
	CB500				
	CB700				
	CB900				
FB	FB100	×	RS-232	○	53.2.5
	FB400	×	RS-232 RS-422	○	
	FB900				
RB	RB100	×	RS-232	○	53.2.6
	RB400				
	RB500				
	RB700				
	RB900				
PF	PF900	×	RS-232 RS-422	○	53.2.7
	PF901				
HA	HA400	×	RS-232 RS-422	○	53.2.7
	HA401				
	HA900				
	HA901				
RMC	RMC500	×	RS-485	○	53.2.7
MA	MA900	×	RS-232 RS-422	○	53.2.7
	MA901				
AG	AG500	×	RS-422	○	53.2.7
THV	THV-A1	×	RS-422 RS-485	○	53.2.7
SA	SA100	×	RS-232	○	53.2.7
	SA200				
SRX	X-TIO	×	RS-232 RS-485	○	53.2.8
SB	SB1	×	RS-485	○	53.2.9
B400	B400	×	RS-422	○	53.2.10

*1 From the models of temperature controller, select the detailed model name which supports each communication type and communication protocol (MODBUS). For the detailed model names of RKC temperature controllers, refer to the following catalog.

Catalog of RKC temperature controllers

53.2 System Configuration

53.2.1 Connecting to H-PCP-J

■ When connecting to one temperature controller

Communication driver
RKC
SR Mini HG(MODBUS)

(1) When using the connector conversion box

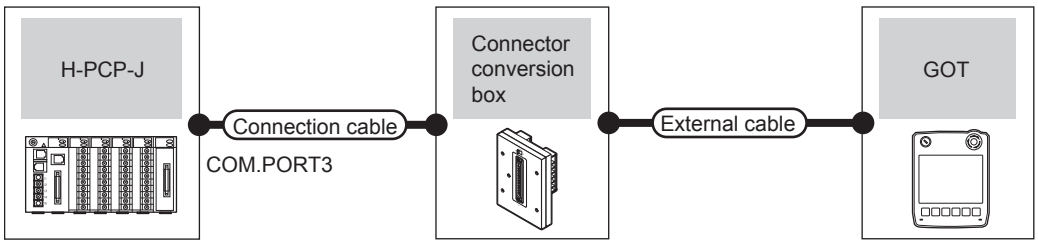

Temperature controller		Connection cable	Conversion connector*1	Connector conversion box	External cable	GOT model	Total distance	Number of connectable equipment
Model	Communication type	Cable model Connection diagram number	Model					
H-PCP-J	RS-232	W-BF-28-0500(0.5m)*1 W-BF-28-1000(1m)*1 W-BF-28-3000(3m)*1 or User preparing RS232 connection diagram 1)	-	GT11H-CNB-37S	GT11H-C30-37P(3m)	GT14 Handy	6m	1 temperature controller for 1 GOT
		W-BF-02-0500(0.5m)*1 W-BF-02-1000(1m)*1 W-BF-02-3000(3m)*1	FAX067*1	GT11H-CNB-37S	GT11H-C30-37P(3m)	GT14 Handy	6m	
	RS-422	User preparing RS422 connection diagram 1)	-	GT11H-CNB-37S	GT11H-C30-37P(3m) GT11H-C60-37P(6m) GT11H-C100-37P(10m)	GT14 Handy	13m	

*1 Product manufactured by RKC. For details of the product, contact RKC.

(2) When using the external cable (GT11H-C□□□-37P)

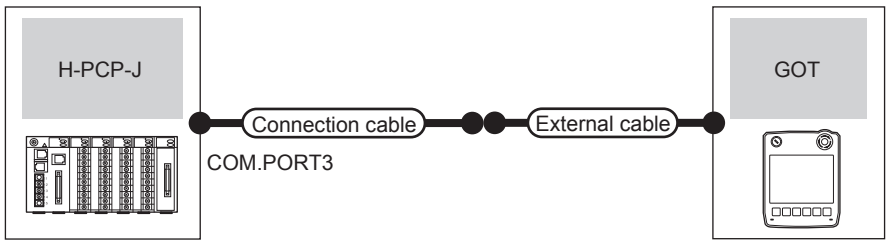

Temperature controller		Connection cable	Conversion connector*1	External cable	GOT model	Total distance	Number of connectable equipment
Model	Communication type	Cable model Connection diagram number	Model				
H-PCP-J	RS-232	User preparing RS232 connection diagram 2)	-	GT11H-C30-37P(3m)	GT14 Handy	6m	1 temperature controller for 1 GOT
		W-BF-02-0500(0.5m)*1 W-BF-02-1000(1m)*1 W-BF-02-3000(3m)*1	FAX067*1	GT11H-C30-37P(3m) User preparing RS232 connection diagram 13)	GT14 Handy	6m	
	RS-422	User preparing RS422 connection diagram 2)	-	GT11H-C30-37P(3m) GT11H-C60-37P(6m) GT11H-C100-37P(10m)	GT14 Handy	13m	

*1 Product manufactured by RKC. For details of the product, contact RKC.

(3) When using the external cable (GT11H-C□□□)

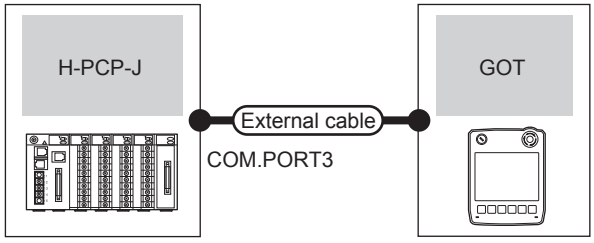

Temperature controller		Conversion connector*1	External cable	GOT model	Total distance	Number of connectable equipment
Model	Communication type	Model				
H-PCP-J	RS-232	-	GT11H-C30(3m) GT11H-C60(6m) User preparing RS232 connection diagram 3)	GT14 Handy	6m	1 temperature controller for 1 GOT
		FAX067*1	GT11H-C30(3m) GT11H-C60(6m) User preparing RS232 connection diagram 14)	GT14 Handy	6m	
	RS-422	-	GT16H-C30(3m) GT16H-C60(6m) GT16H-C100(10m) User preparing RS422 connection diagram 3)	GT14 Handy	13m	

*1 Product manufactured by RKC. For details of the product, contact RKC.

■ When connecting to multiple temperature controllers

(1) When using the connector conversion box

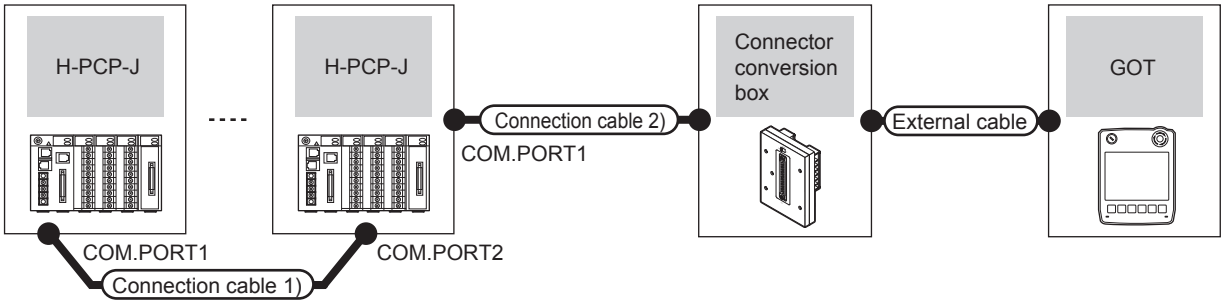

Temperature controller		Connection cable 1)	Connection cable 2)	Connector conversion box	External cable	GOT model	Total distance *1	Number of connectable equipment
Model	Communication type	Cable model Connection diagram number	Cable model Connection diagram number					
H-PCP-J	RS-422	W-BF-02-0500(0.5m)*2 W-BF-02-1000(1m)*2 W-BF-02-3000(3m)*2	User preparing RS422 connection diagram 1)	GT11H-CNB-37S	GT11H-C30-37P(3m) GT11H-C60-37P(6m) GT11H-C100-37P(10m)	GT14 Handy	13m	Up to 10 temperature controllers for 1 GOT

*1 The distance from the GOT to the temperature controller (Connection cable 1) + Connection cable 2) + External cable)

*2 Product manufactured by RKC. For details of the product, contact RKC.

(2) When using the external cable (GT11H-C□□□-37P)

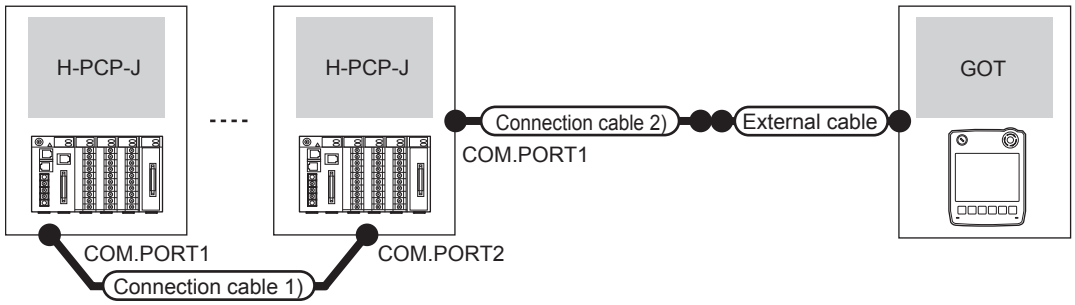

Temperature controller		Connection cable 1)	Connection cable 2)	External cable	GOT model	Total distance *1	Number of connectable equipment
Model	Communication type	Cable model Connection diagram number	Cable model Connection diagram number				
H-PCP-J	RS-422	W-BF-02-0500(0.5m)*2 W-BF-02-1000(1m)*2 W-BF-02-3000(3m)*2	User preparing RS422 connection diagram 2)	GT11H-C30-37P(3m) GT11H-C60-37P(6m) GT11H-C100-37P(10m)	GT14 Handy	13m	Up to 10 temperature controllers for 1 GOT

*1 The distance from the GOT to the temperature controller (Connection cable 1) + Connection cable 2) + External cable)

*2 Product manufactured by RKC. For details of the product, contact RKC.

(3) When using the external cable (GT11H-C□□□)

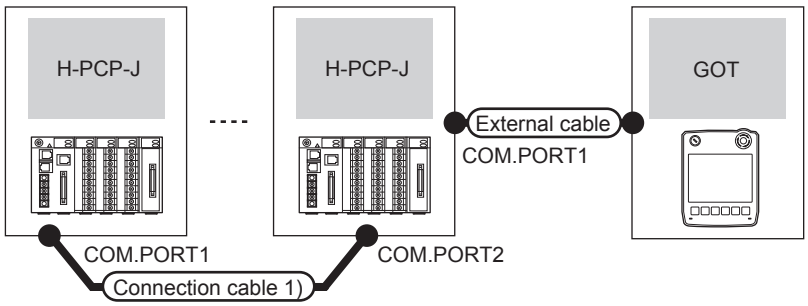

Temperature controller		Connection cable 1)	External cable	GOT model	Total distance*1	Number of connectable equipment
Model	Communication type	Cable model Connection diagram number				
H-PCP-J	RS-422	W-BF-02-0500(0.5m)*2 W-BF-02-1000(1m)*2 W-BF-02-3000(3m)*2	GT11H-C30(3m) GT11H-C60(6m) GT11H-C100(10m) User preparing RS422 connection diagram 8)	GT14 Handy	13m	Up to 10 temperature controllers for 1 GOT

*1 The distance from the GOT to the temperature controller (Connection cable 1) + Connection cable 2) + External cable)

*2 Product manufactured by RKC. For details of the product, contact RKC.

53.2.2 Connecting to H-PCP-A or H-PCP-B

■ When connecting to one temperature controller

Communication driver
RKC
SR Mini HG(MODBUS)

(1) When using the connector conversion box

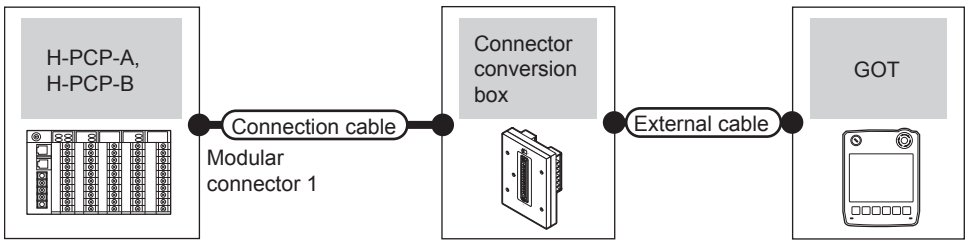

Temperature controller		Connection cable	Conversion connector*1	Connector conversion box	External cable	GOT model	Total distance	Number of connectable equipment
Model	Communication type	Cable model Connection diagram number						
H-PCP-A H-PCP-B	RS-232	W-BF-28-0500(0.5m)*1 W-BF-28-1000(1m)*1 W-BF-28-3000(3m)*1 or User preparing RS232 connection diagram 1)	-	GT11H-CNB-37S	GT11H-C30-37P(3m)	GT14 Handy	6m	1 temperature controller for 1 GOT
		W-BF-02-0500(0.5m)*1 W-BF-02-1000(1m)*1 W-BF-02-3000(3m)*1	FAX067	GT11H-CNB-37S	GT11H-C30-37P(3m)	GT14 Handy	6m	
	RS-422	User preparing RS422 connection diagram 1)	-	GT11H-CNB-37S	GT11H-C30-37P(3m) GT11H-C60-37P(6m) GT11H-C100-37P(10m)	GT14 Handy	13m	

*1 Product manufactured by RKC. For details of the product, contact RKC.

(2) When using the external cable (GT11H-C□□□-37P)

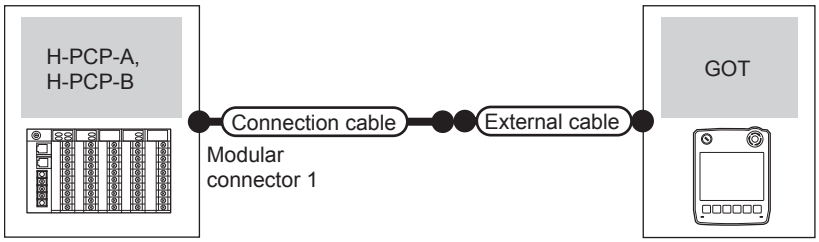

Temperature controller		Connection cable	Conversion connector*1	External cable	GOT model	Total distance	Number of connectable equipment
Model	Communication type	Cable model Connection diagram number					
H-PCP-A H-PCP-B	RS-232	User preparing RS232 connection diagram 2)	-	GT11H-C30-37P(3m)	GT14 Handy	6m	1 temperature controller for 1 GOT
		W-BF-02-0500(0.5m)*1 W-BF-02-1000(1m)*1 W-BF-02-3000(3m)*1	FAX067	GT11H-C30-37P(3m) User preparing RS232 connection diagram 13)	GT14 Handy	6m	
	RS-422	User preparing RS422 connection diagram 2)	-	GT11H-C30-37P(3m) GT11H-C60-37P(6m) GT11H-C100-37P(10m)	GT14 Handy	13m	

*1 Product manufactured by RKC. For details of the product, contact RKC.

(3) When using the external cable (GT11H-C□□□)

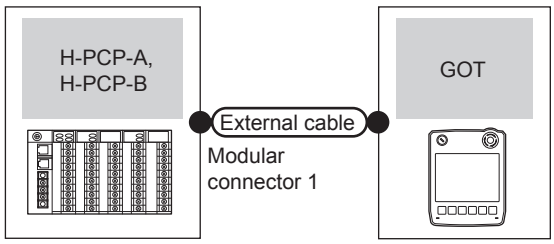

Temperature controller		Conversion connector*1	External cable	GOT model	Total distance	Number of connectable equipment
Model	Communication type					
H-PCP-A H-PCP-B	RS-232	-	GT11H-C30(3m) GT11H-C60(6m) User preparing RS232 connection diagram 3)	GT14 Handy	6m	1 temperature controller for 1 GOT
		FAX067	GT11H-C30(3m) GT11H-C60(6m) User preparing RS232 connection diagram 14)	GT14 Handy	6m	
	RS-422	-	GT16H-C30(3m) GT16H-C60(6m) GT16H-C100(10m) User preparing RS422 connection diagram 3)	GT14 Handy	13m	

*1 Product manufactured by RKC. For details of the product, contact RKC.

■ When connecting to multiple temperature controllers

(1) When using the connector conversion box

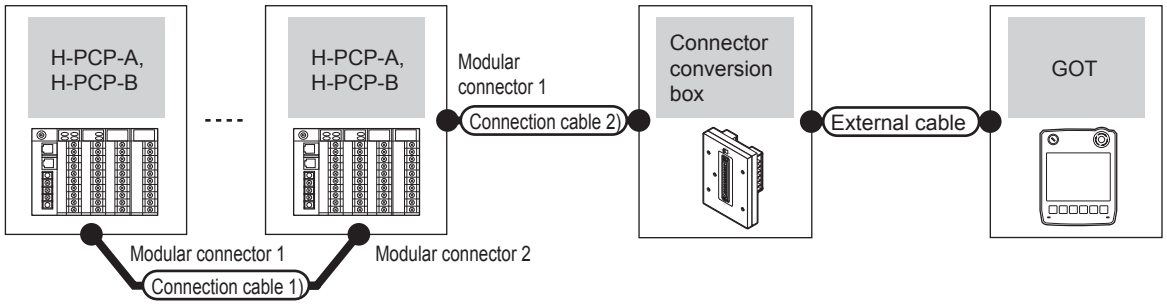

Temperature controller		Connection cable 1)	Connection cable 2)	Connector conversion box	External cable	GOT model	Total distance *2	Number of connectable equipment
Model	Communication type	Cable model Connection diagram number	Cable model Connection diagram number					
H-PCP-A H-PCP-B	RS-422	W-BF-02-0500(0.5m)*1 W-BF-02-1000(1m)*1 W-BF-02-3000(3m)*1	User preparing RS422 connection diagram 1)	GT11H-CNB-37S	GT11H-C30-37P(3m) GT11H-C60-37P(6m) GT11H-C100-37P(10m)	GT14 Handy	13m	Up to 10 temperature controllers for 1 GOT

*1 Product manufactured by RKC. For details of the product, contact RKC.

*2 The distance from the GOT to the temperature controller (Connection cable 1) + Connection cable 2) + External cable)

(2) When using the external cable (GT11H-C□□□-37P)

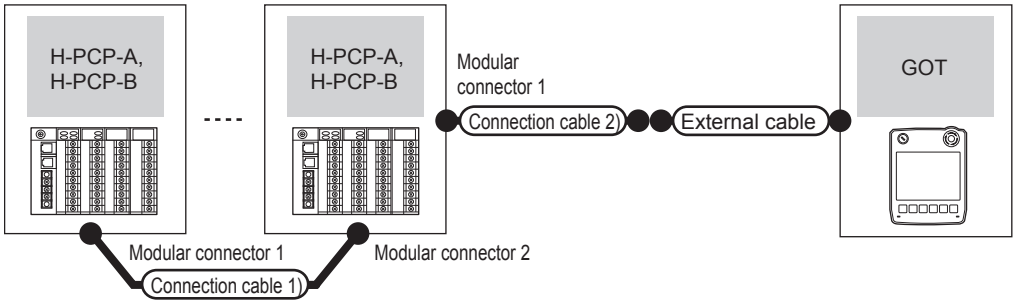

Temperature controller		Connection cable 1)	Connection cable 2)	External cable	GOT model	Total distance *2	Number of connectable equipment
Model	Communication type	Cable model Connection diagram number	Cable model Connection diagram number				
H-PCP-A H-PCP-B	RS-422	W-BF-02-0500(0.5m)*1 W-BF-02-1000(1m)*1 W-BF-02-3000(3m)*1	User preparing RS422 connection diagram 2)	GT11H-C30-37P(3m) GT11H-C60-37P(6m) GT11H-C100-37P(10m)	GT14 Handy	13m	Up to 10 temperature controllers for 1 GOT

*1 Product manufactured by RKC. For details of the product, contact RKC.

*2 The distance from the GOT to the temperature controller (Connection cable 1) + Connection cable 2) + External cable)

(3) When using the external cable (GT11H-C□□□)

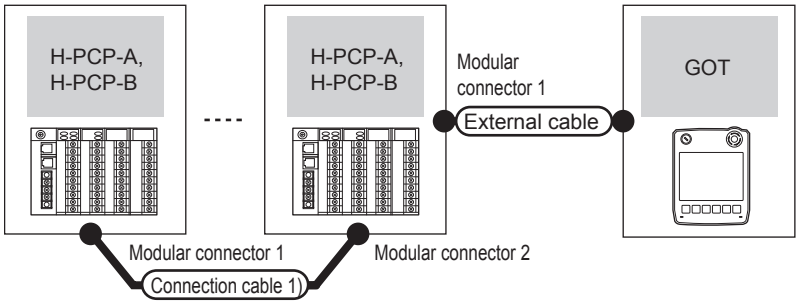

Temperature controller		Connection cable 1)	External cable	GOT model	Total distance *2	Number of connectable equipment
Model	Communication type	Cable model Connection diagram number				
H-PCP-A H-PCP-B	RS-422	W-BF-02-0500(0.5m)*1 W-BF-02-1000(1m)*1 W-BF-02-3000(3m)*1	GT11H-C30(3m) GT11H-C60(6m) GT11H-C100(10m) User preparing RS422 connection diagram 3)	GT14 Handy	13m	Up to 10 temperature controllers for 1 GOT

*1 Product manufactured by RKC. For details of the product, contact RKC.

*2 The distance from the GOT to the temperature controller (Connection cable 1) + Connection cable 2) + External cable)

53.2.3 Connecting to SRZ

■ When connecting to temperature control module (Z-TIO/Z-CT) with a converter

(1) When using the connector conversion box

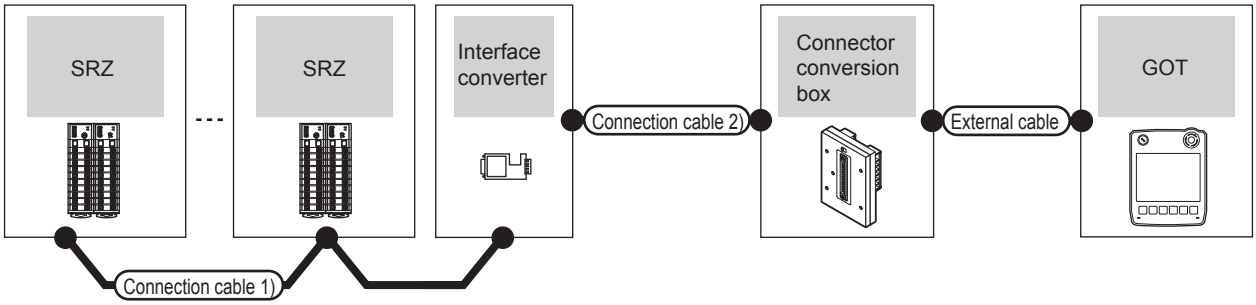

Temperature controller	Connection cable 1)		Interface converter		Connection cable 2)	Connector conversion box	External cable	GOT model	Total distance *2	Number of connectable equipment
Series	Cable model Connection diagram number	Max. distance	Model	Communication type	Cable model Connection diagram number					
SRZ	User preparing RS485 connection diagram 1)	1200m	CD485/V*1	RS-232	User preparing RS232 connection diagram 13)	GT11H-CNB-37S	GT11H-C30-37P (3m)	GT14 Handy	6m	Z-TIO: Up to 16 Z-DIO: Up to 16 Z-CT: Up to 16 Total of Z-TIO, Z-CT and Z-DIO: Up to 31 for 1 GOT

*1 Product manufactured by DATA LINK Co.,Ltd. For details of the product, contact DATA LINK Co.,Ltd.

*2 The distance from the GOT to the interface converter (Connection cable 2) + External cable)

(2) When using the external cable (GT11H-C□□□-37P)

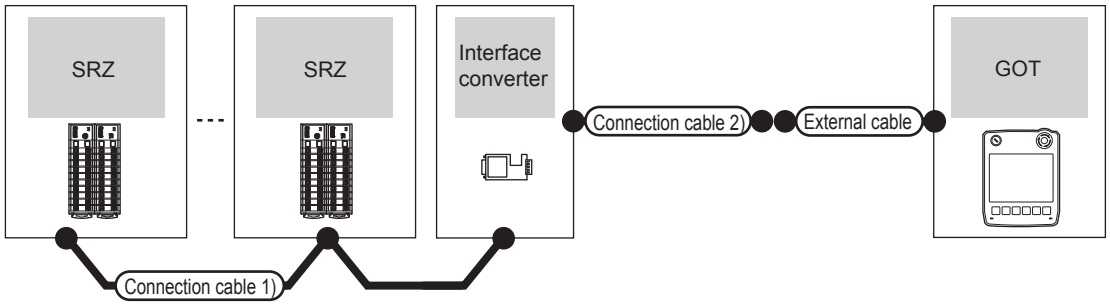

Temperature controller	Connection cable 1)		Interface converter		Connection cable 2)	External cable	GOT model	Total distance *2	Number of connectable equipment
Series	Cable model Connection diagram number	Max. distance	Model	Communication type	Cable model Connection diagram number				
SRZ	User preparing RS485 connection diagram 1)	1200m	CD485/V*1	RS-232	User preparing RS232 connection diagram 13)	GT11H-C30-37P(3m)	GT14 Handy	6m	Z-TIO: Up to 16 Z-DIO: Up to 16 Z-CT: Up to 16 Total of Z-TIO, Z-CT and Z-DIO: Up to 31 for 1 GOT

*1 Product manufactured by DATA LINK Co.,Ltd. For details of the product, contact DATA LINK Co.,Ltd.

*2 The distance from the GOT to the interface converter (Connection cable 2) + External cable)

(3) When using the external cable (GT11H-C□□□)

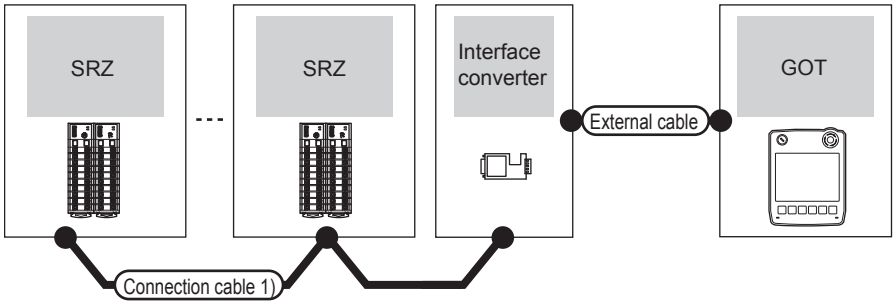

Temperature controller	Connection cable 1)		Interface converter		External cable	GOT model	Total distance *2	Number of connectable equipment
Series	Cable model Connection diagram number	Max. distance	Model	Communication type				
SRZ	User preparing RS485 connection diagram 1)	1200m	CD485/V*1	RS-232	GT11H-C30(3m) GT11H-C60(6m) User preparing RS232 connection diagram 9)	GT14 Handy	6m	Z-TIO: Up to 16 Z-DIO: Up to 16 Z-CT: Up to 16 Total of Z-TIO, Z-CT and Z-DIO: Up to 31 for 1 GOT

*1 Product manufactured by DATA LINK Co.,Ltd. For details of the product, contact DATA LINK Co.,Ltd.

*2 The distance from the GOT to the interface converter (Connection cable 2) + External cable)

■ When connecting to communication extension module (Z-COM) with a converter

(1) When using the connector conversion box

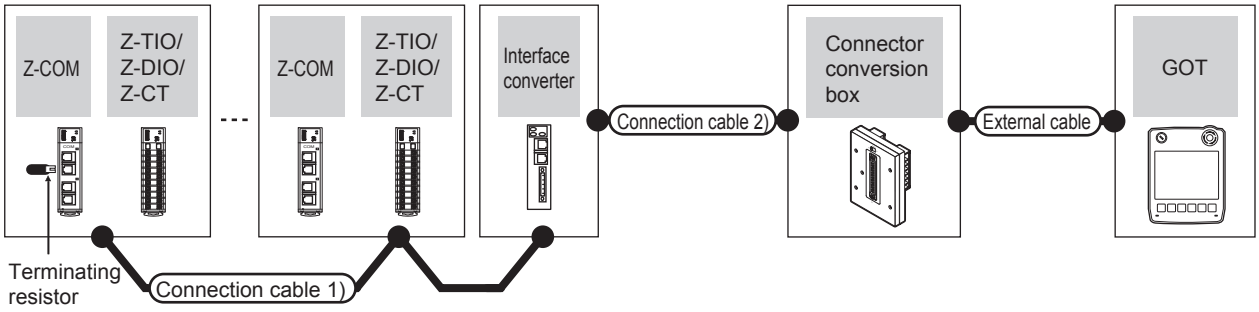

Z-COM		Connection cable 1)		Interface converter*1		Connection cable 2)	Connector conversion box	External cable	GOT model	Total distance *2	Number of connectable equipment
Model	Terminating resistor*1	Cable model Connection diagram number	Max. distance	Model	Communication type	Cable model Connection diagram number					
Z-COM	W-BW-02	W-BF-02-0500(0.5m) W-BF-02-1000(1m) W-BF-02-3000(3m)*1 or User preparing RS422 connection diagram 4)	1200m	COM-A	RS-232	W-BF-28-0500(0.5m) W-BF-28-1000(1m) W-BF-28-3000(3m)*1 or User preparing RS232 connection diagram 4)	GT11H-CNB-37S	GT11H-C30-37P (3m)	GT14 Handy	6m	Up to 16 Z-COMs for 1 GOT Z-TIO: Up to 16 Z-DIO: Up to 16 Z-CT: Up to 16 Total of Z-TIO, Z-CT and Z-DIO: Up to 31 for Z-COM

*1 Product manufactured by RKC. For details of the product, contact RKC.

*2 The distance from the GOT to the interface converter (Connection cable 2) + External cable)

(2) When using the external cable (GT11H-C□□□-37P)

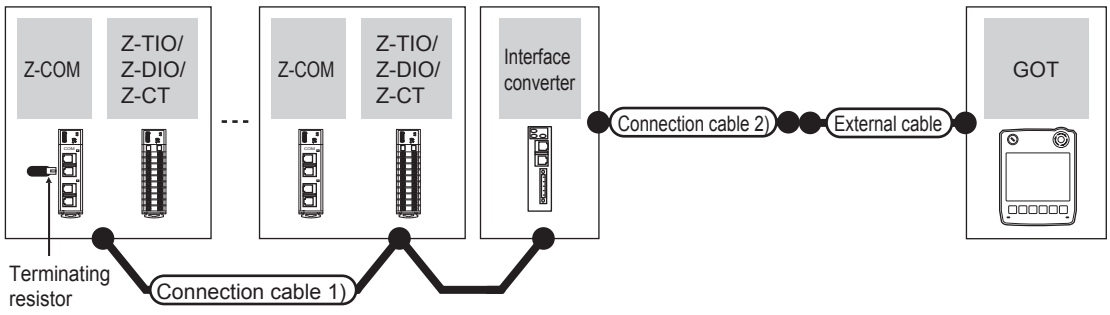

Z-COM		Connection cable 1)		Interface converter*1		Connection cable 2)	External cable	GOT model	Total distance *2	Number of connectable equipment
Model	Terminating resistor*1	Cable model Connection diagram number	Max. distance	Model	Communication type	Cable model Connection diagram number				
Z -COM	W-BW-02	W-BF-02-0500(0.5m) W-BF-02-1000(1m) W-BF-02-3000(3m)*1 or User preparing RS422 connection diagram 4)	1200m	COM -A	RS-232	User preparing RS232 connection diagram 5)	GT11H-C30-37P (3m)	GT14 Handy	6m	Up to 16 Z-COMs for 1 GOT Z-TIO: Up to 16 Z-DIO: Up to 16 Z-CT: Up to 16 Total of Z-TIO, Z-CT and Z-DIO: Up to 31 for Z-COM

*1 Product manufactured by RKC. For details of the product, contact RKC.
*2 The distance from the GOT to the interface converter (Connection cable 2) + External cable)

(3) When using the external cable (GT11H-C□□□)

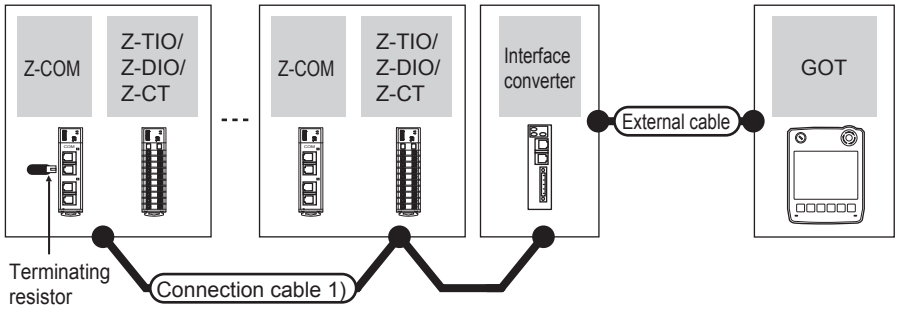

Z-COM		Connection cable 1)		Interface converter*1		External cable	GOT model	Total distance *2	Number of connectable equipment
Model	Terminating resistor*1	Cable model Connection diagram number	Max. distance	Model	Communication type				
Z -COM	W-BW-02	W-BF-02-0500(0.5m) W-BF-02-1000(1m) W-BF-02-3000(3m)*1 or User preparing RS422 connection diagram 4)	1200m	COM -A	RS-232	GT11H-C30(3m) GT11H-C60(3m) User preparing RS232 connection diagram 6)	GT14 Handy	6m	Up to 16 Z-COMs for 1 GOT Z-TIO: Up to 16 Z-DIO: Up to 16 Z-CT: Up to 16 Total of Z-TIO, Z-CT and Z-DIO: Up to 31 for Z-COM

*1 Product manufactured by RKC. For details of the product, contact RKC.
*2 The distance from the GOT to the interface converter (Connection cable 2) + External cable)

■ When connecting directly to communication extension module (Z-COM)

(1) When using the connector conversion box

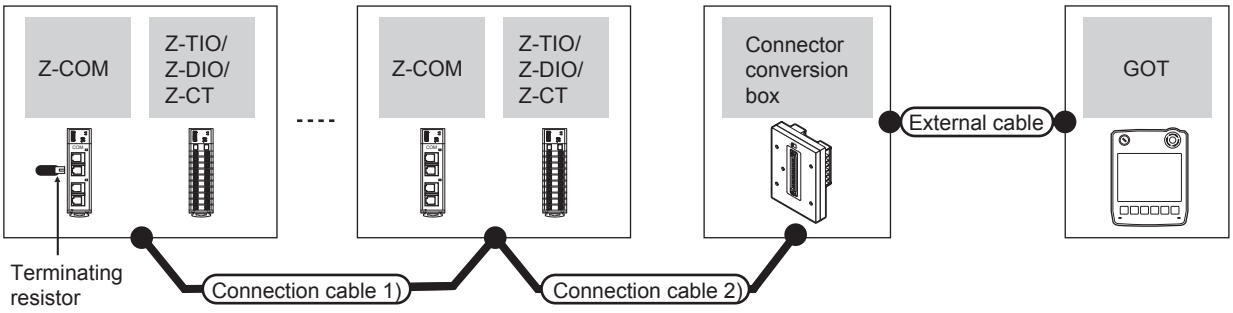

Z-COM			Connection cable 1)	Connection cable 2)	Connector conversion box	External cable	GOT model	Total distance *2	Number of connectable equipment
Model	Communication type	Terminating resistor*1	Cable model Connection diagram number	Cable model Connection diagram number					
Z-COM	RS-422	W-BW-02	W-BF-02-0500(0.5m) W-BF-02-1000(1m) W-BF-02-3000(3m)*1 or User preparing RS422 connection diagram 4)	User preparing RS422 connection diagram 1)	GT11H-CNB-37S	GT11H-C30-37P(3m) GT11H-C60-37P(6m) GT11H-C100-37P(10m)	GT14 Handy	13m	Up to 10 Z-COMs for 1 GOT Z-TIO: Up to 16 Z-DIO: Up to 16 Z-CT: Up to 16 Total of Z-TIO, Z-CT and Z-DIO: Up to 31 for Z-COM

*1 Product manufactured by RKC. For details of the product, contact RKC.

*2 The distance from the GOT to the temperature controller (Connection cable 1) + Connection cable 2) + External cable)

(2) When using the external cable (GT11H-C□□□-37P)

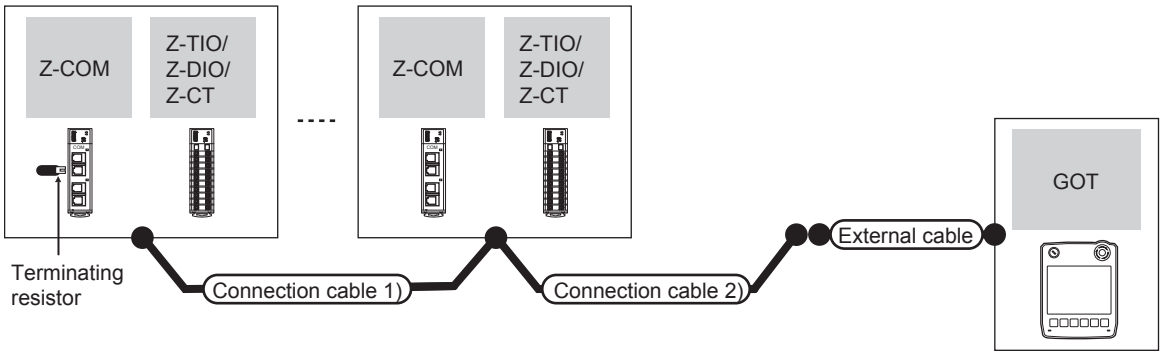

Z-COM			Connection cable 1)	Connection cable 2)	External cable	GOT model	Total distance *2	Number of connectable equipment
Model	Communication type	Terminating resistor*1	Cable model Connection diagram number	Cable model Connection diagram number				
Z-COM	RS-422	W-BW-02	W-BF-02-0500(0.5m) W-BF-02-1000(1m) W-BF-02-3000(3m)*1 or User preparing RS422 connection diagram 4)	User preparing RS422 connection diagram 2)	GT11H-C30-37P(3m) GT11H-C60-37P(6m) GT11H-C100-37P(10m)	GT14 Handy	13m	Up to 16 Z-COMs for 1 GOT Z-TIO: Up to 16 Z-DIO: Up to 16 Z-CT: Up to 16 Total of Z-TIO, Z-CT and Z-DIO: Up to 31 for Z-COM

*1 Product manufactured by RKC. For details of the product, contact RKC.

*2 The distance from the GOT to the temperature controller (Connection cable 1) + Connection cable 2) + External cable)

(3) When using the external cable (GT11H-C□□□)

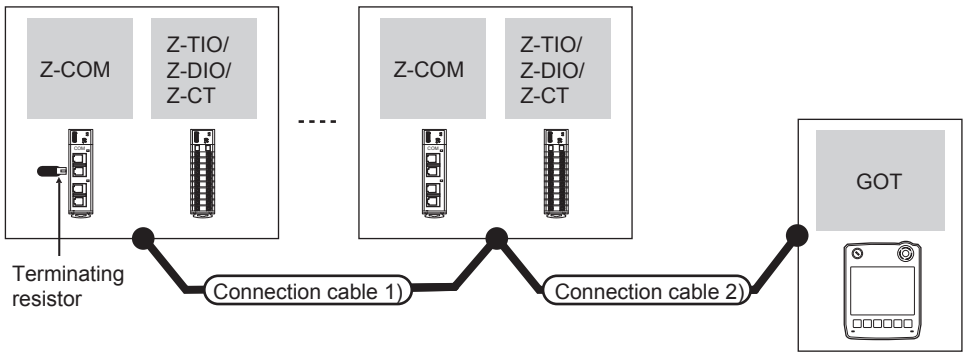

Z-COM			Connection cable 1)	External cable	GOT model	Total distance *2	Number of connectable equipment
Model	Communication type	Terminating resistor*1	Cable model Connection diagram number				
Z-COM	RS-422	W-BW-02	W-BF-02-0500(0.5m) W-BF-02-1000(1m) W-BF-02-3000(3m)*1 or User preparing RS422 connection diagram 4)	GT11H-C30(3m) GT11H-C60(6m) GT11H-C100(10m) User preparing RS422 connection diagram 3)	GT14 Handy	13m	Up to 10 Z-COMs for 1 GOT Z-TIO: Up to 16 Z-DIO: Up to 16 Z-CT: Up to 16 Total of Z-TIO, Z-CT and Z-DIO: Up to 31 for Z-COM

53.2.4 Connecting to CB Series (CB100, CB400, CB500, CB700, CB900)

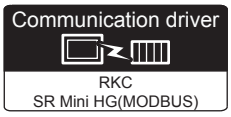

(1) When using the connector conversion box

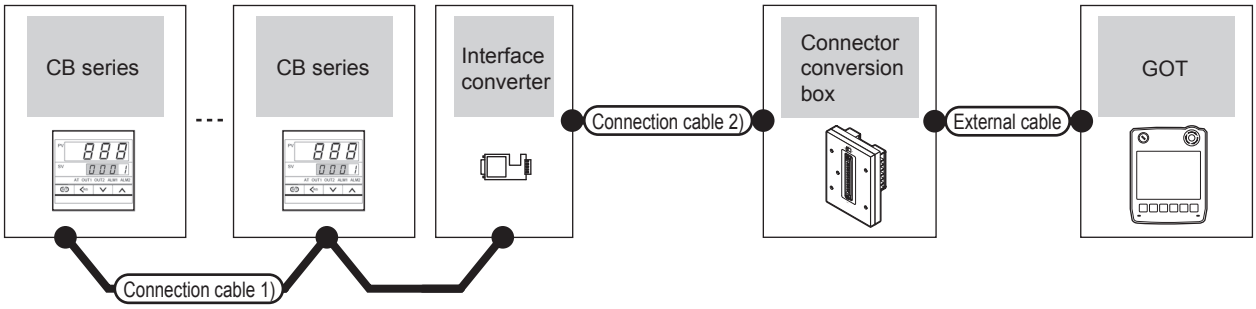

Temperature controller	Connection cable 1)		Interface converter		Connection cable 2)	Connector conversion box	External cable	GOT model	Total distance *2	Number of connectable equipment
Series	Cable model Connection diagram number	Max. distance	Model	Communication type	Cable model Connection diagram number					
CB	User preparing RS485 connection diagram 1)	1200m	CD485/V*1	RS-232	User preparing RS232 connection diagram 7)	GT11H-CNB-37S	GT11H-C30-37P (3m)	GT14 Handy	6m	Up to 31 temperature controllers for 1 GOT

*1 Product manufactured by DATA LINK Co.,Ltd. For details of the product, contact DATA LINK Co.,Ltd.

*2 The distance from the GOT to the interface converter (Connection cable 2) + External cable)

(2) When using the external cable (GT11H-C□□□-37P)

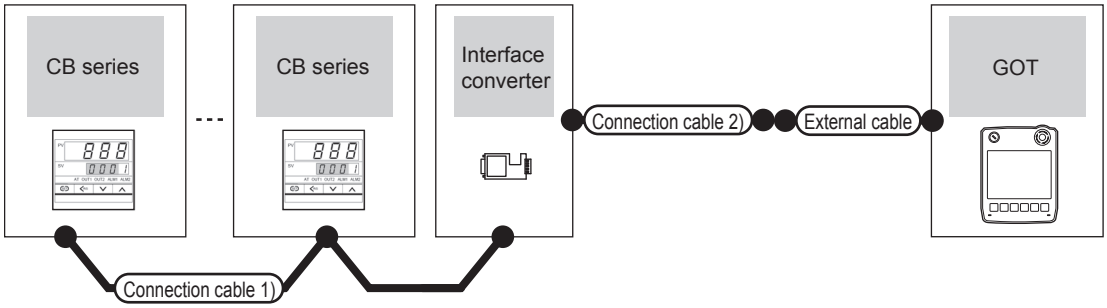

Temperature controller	Connection cable 1)		Interface converter		Connection cable 2)	External cable	GOT model	Total distance *2	Number of connectable equipment
Series	Cable model Connection diagram number	Max. distance	Model	Communication type	Cable model Connection diagram number				
CB	User preparing RS485 connection diagram 1)	1200m	CD485/V*1	RS-232	User preparing RS232 connection diagram 8)	GT11H-C30-37P (3m)	GT14 Handy	6m	Up to 31 temperature controllers for 1 GOT

*1 Product manufactured by DATA LINK Co.,Ltd. For details of the product, contact DATA LINK Co.,Ltd.
*2 The distance from the GOT to the interface converter (Connection cable 2) + External cable)

(3) When using the external cable (GT11H-C□□□)

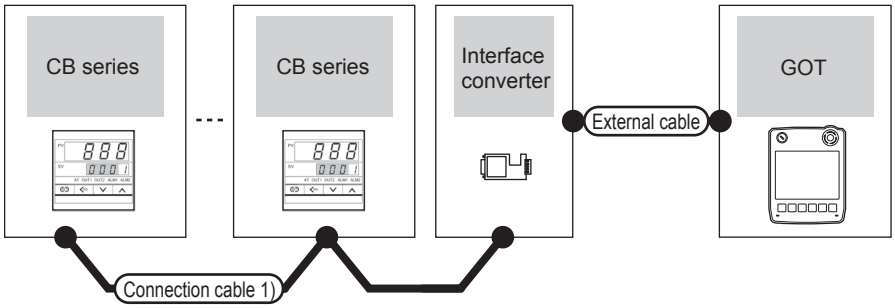

Temperature controller	Connection cable 1)		Interface converter		External cable	GOT model	Total distance *2	Number of connectable equipment
Series	Cable model Connection diagram number	Max. distance	Model	Communication type				
CB	User preparing RS485 connection diagram 1)	1200m	CD485/V*1	RS-232	GT11H-C30(3m) GT11H-C60(6m) User preparing RS232 connection diagram 9)	GT14 Handy	6m	Up to 31 temperature controllers for 1 GOT

*1 Product manufactured by DATA LINK Co.,Ltd. For details of the product, contact DATA LINK Co.,Ltd.
*2 The distance from the GOT to the interface converter (Connection cable 2) + External cable)

53.2.5 Connecting to FB series (FB100, FB400 or FB900)

■ When connecting to temperature controller

(1) When using the connector conversion box

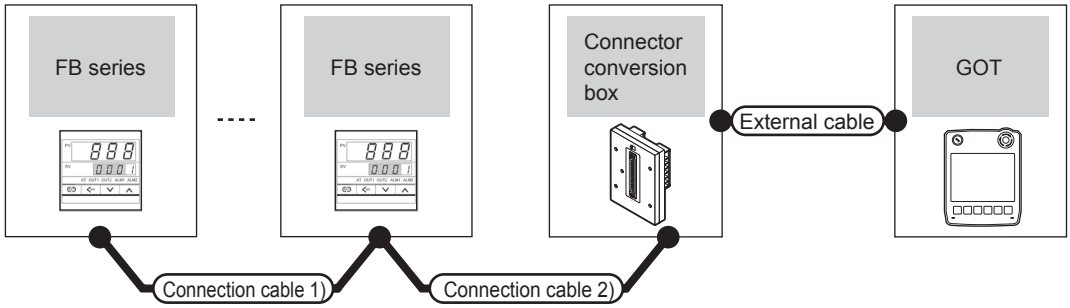

Temperature controller		Connection cable 1)	Connection cable 2)	Connector conversion box	External cable	GOT model	Total distance *2	Number of connectable equipment
Model	Communication type	Cable model Connection diagram number	Cable model Connection diagram number					
FB400 FB900	RS-232*1	-	User preparing RS232 connection diagram 10)	GT11H-CNB-37S	GT11H-C30-37P(3m)	GT14 Handy	6m	1 temperature controller for 1 GOT
	RS-422*1	User preparing RS422 connection diagram 5)	User preparing RS422 connection diagram 6)	GT11H-CNB-37S	GT11H-C30-37P(3m) GT11H-C60-37P(6m) GT11H-C100-37P(10m)	GT14 Handy	13m	Up to 10 temperature controllers for 1 GOT

*1 Use communication 1 for the communication format.

*2 The distance from the GOT to the temperature controller (Connection cable 1) + Connection cable 2) + External cable)

(2) When using the external cable (GT11H-C□□□-37P)

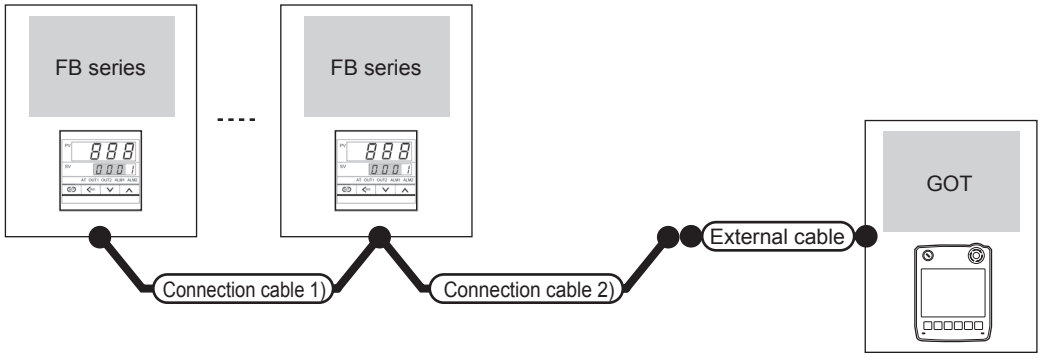

Temperature controller		Connection cable 1)	Connection cable 2)	External cable	GOT model	Total distance *2	Number of connectable equipment
Model	Communication type	Cable model Connection diagram number	Cable model Connection diagram number				
FB400 FB900	RS-232*1	-	User preparing RS232 connection diagram 11)	GT11H-C30-37P(3m)	GT14 Handy	6m	1 temperature controller for 1 GOT
	RS-422*1	User preparing RS422 connection diagram 5)	User preparing RS422 connection diagram 7)	GT11H-C30-37P(3m) GT11H-C60-37P(6m) GT11H-C100-37P(10m)	GT14 Handy	13m	Up to 10 temperature controllers for 1 GOT

*1 Use communication 1 for the communication format.

*2 The distance from the GOT to the temperature controller (Connection cable 1) + Connection cable 2) + External cable)

(3) When using the external cable (GT11H-C□□□)

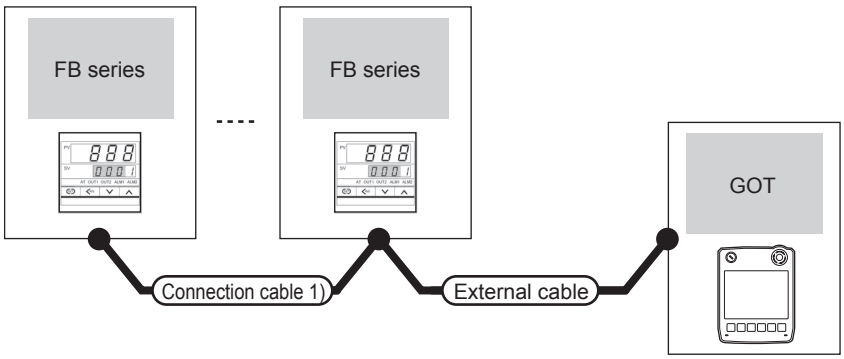

Temperature controller		Connection cable 1)	External cable	GOT model	Total distance *2	Number of connectable equipment
Model	Communication type	Cable model Connection diagram number				
FB400 FB900	RS-232*1	-	GT11H-C30(3m) GT11H-C60(3m) User preparing RS232 connection diagram 12)	GT14 Handy	6m	1 temperature controller for 1 GOT
	RS-422*1	User preparing RS422 connection diagram 5)	GT11H-C30(3m) GT11H-C60(6m) GT11H-C100(10m) User preparing RS422 connection diagram 8)	GT14 Handy	13m	Up to 10 temperature controllers for 1 GOT

*1 Use communication 1 for the communication format.
*2 The distance from the GOT to the temperature controller (Connection cable 1) + Connection cable 2) + External cable)

■ When connecting to multiple temperature controllers with interface converter (COM-A)

(1) When using the connector conversion box

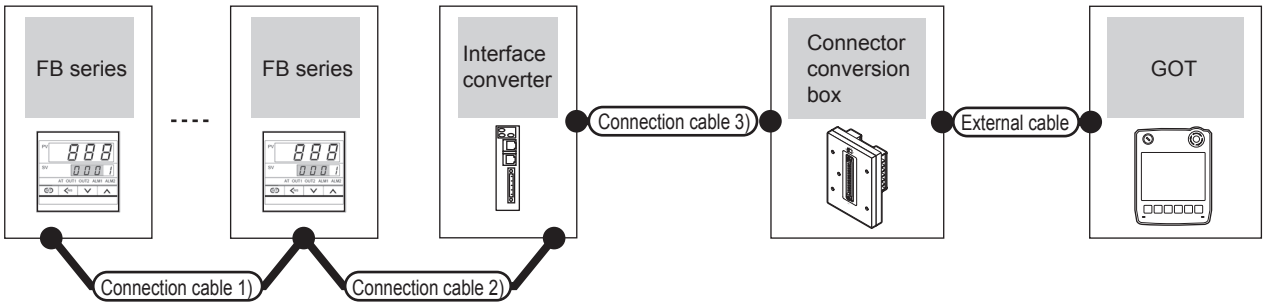

Temperature controller	Connection cable 1)	Connection cable 2)	Max. distance *3	Interface converter*2		Connection cable 3)	Connector conversion box	External cable	GOT model	Total distance *4	Number of connectable equipment
Model	Cable model Connection diagram number	Cable model Connection diagram number		Model	Communication type	Cable model Connection diagram number					
FB400 FB900	User preparing RS422 connection diagram 5)*1	W-BF-01-0500 (0.5m) W-BF-01-1000 (1m) W-BF-01-3000 (3m)*2	1000m	COM-A	RS-232	W-BF-28-0500(0.5m) W-BF-28-1000(1m) W-BF-28-3000(3m)*2 or User preparing RS232 connection diagram 4)	GT11H-CNB-37S	GT11H-C30-37P (3m)	GT14 Handy	6m	Up to 31 temperature controllers for 1 GOT

*1 Use communication 1 for the communication format.
*2 Product manufactured by RKC. For details of the product, contact RKC.
*3 The distance from the temperature controller to the interface converter (Connection cable 1) + Connection cable 2))
*4 The distance from the GOT to the interface converter (Connection cable 3) + External cable)

(2) When using the external cable (GT11H-C□□□-37P)

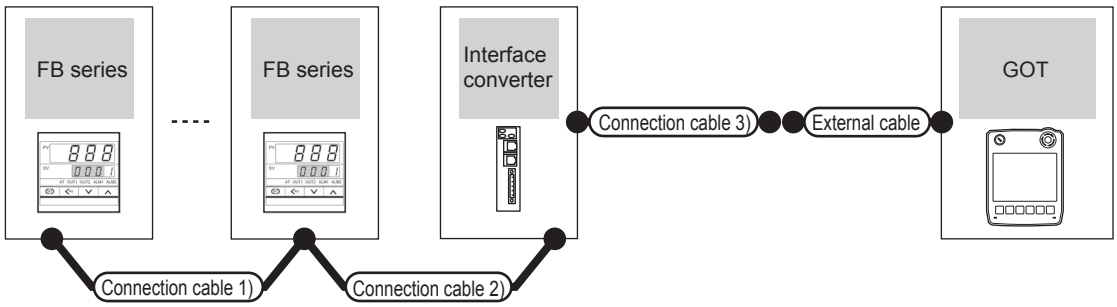

Temperature controller	Connection cable 1)	Connection cable 2)	Max. distance *3	Interface converter *2		Connection cable 3)	External cable	GOT model	Total distance *4	Number of connectable equipment
Model	Cable model Connection diagram number	Cable model Connection diagram number		Model	Communication type	Cable model Connection diagram number				
FB400 FB900	User preparing RS422 connection diagram 5)*1	W-BF-01-0500(0.5m) W-BF-01-1000(1m) W-BF-01-3000(3m)*2	1000m	COM-A	RS-232	User preparing RS232 connection diagram 5)	GT11H-C30-37P (3m)	GT14 Handy	6m	Up to 31 temperature controllers for 1 GOT

*1 Use communication 1 for the communication format.
*2 Product manufactured by RKC. For details of the product, contact RKC.
*3 The distance from the temperature controller to the interface converter (Connection cable 1) + Connection cable 2))
*4 The distance from the GOT to the interface converter (Connection cable 3) + External cable)

(3) When using the external cable (GT11H-C□□□)

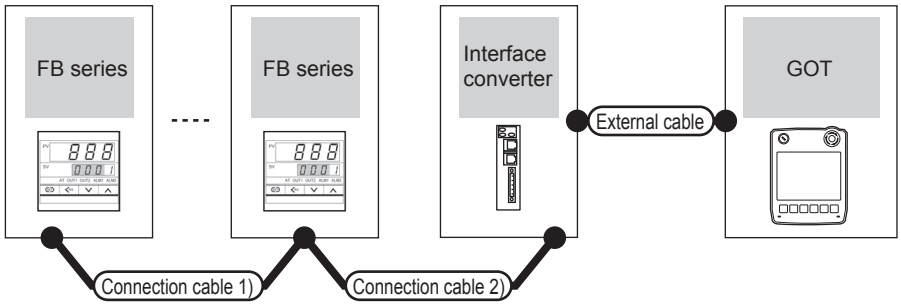

Temperature controller	Connection cable 1)	Connection cable 2)	Max. distance *3	Interface converter *2		External cable	GOT model	Total distance *4	Number of connectable equipment
Model	Cable model Connection diagram number	Cable model Connection diagram number		Model	Communication type				
FB400 FB900	User preparing RS422 connection diagram 5)*1	W-BF-01-0500(0.5m) W-BF-01-1000(1m) W-BF-01-3000(3m)*2	1000m	COM-A	RS-232	GT11H-C30(3m) GT11H-C60(6m) User preparing RS232 connection diagram 6)	GT14 Handy	6m	Up to 31 temperature controllers for 1 GOT

*1 Use communication 1 for the communication format.
*2 Product manufactured by RKC. For details of the product, contact RKC.
*3 The distance from the temperature controller to the interface converter (Connection cable 1) + Connection cable 2))
*4 The distance from the GOT to the interface converter (Connection cable 3) + External cable)

■ When connecting to multiple temperature controllers with interface converter (CD485/V)

(1) When using the connector conversion box

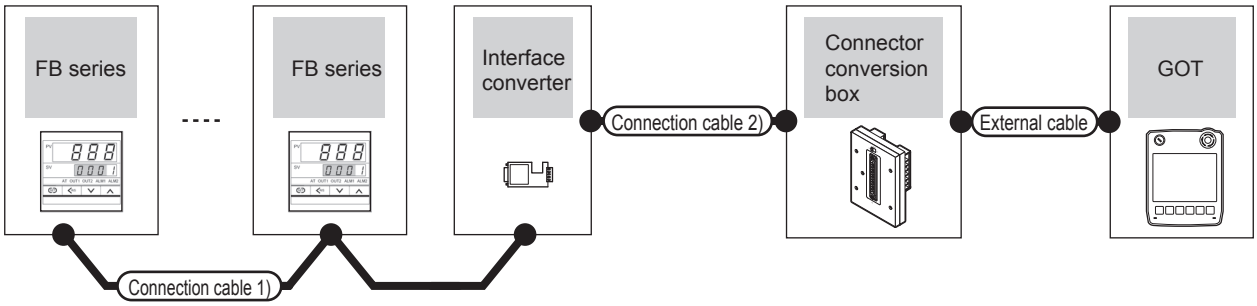

Temperature controller	Connection cable 1)		Interface converter*1		Connection cable 2)	Connector conversion box	External cable	GOT model	Total distance *2	Number of connectable equipment
Model	Cable model Connection diagram number	Max. distance	Model	Communication type	Cable model Connection diagram number					
FB100 FB400 FB900	User preparing RS485 connection diagram 1)	1200m	CD485/V	RS-232	User preparing RS232 connection diagram 7)	GT11H-CNB-37S	GT11H-C30-37P (3m)	GT14 Handy	6m	Up to 31 temperature controllers for 1 GOT

*1 Product manufactured by DATA LINK Co.,Ltd. For details of the product, contact DATA LINK Co.,Ltd.
*2 The distance from the GOT to the interface converter (Connection cable 2) + External cable)

(2) When using the external cable (GT11H-C□□□-37P)

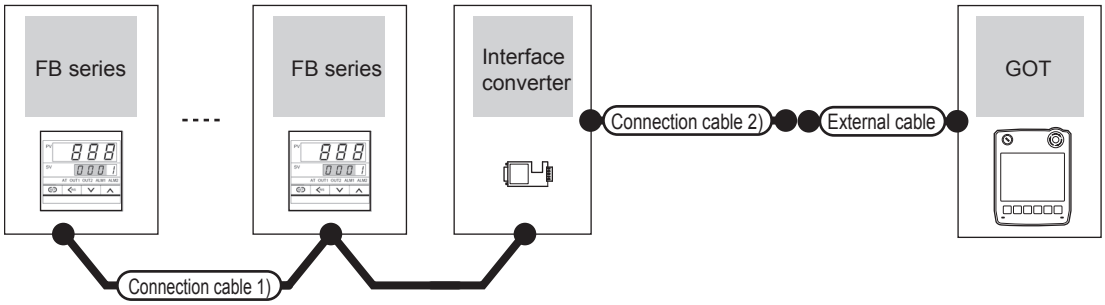

Temperature controller	Connection cable 1)		Interface converter*1		Connection cable 2)	External cable	GOT model	Total distance *2	Number of connectable equipment
Model	Cable model Connection diagram number	Max. distance	Model	Communication type	Cable model Connection diagram number				
FB100 FB400 FB900	User preparing RS485 connection diagram 1)	1200m	CD485/V	RS-232	User preparing RS232 connection diagram 8)	GT11H-C30-37P (3m)	GT14 Handy	6m	Up to 31 temperature controllers for 1 GOT

*1 Product manufactured by DATA LINK Co.,Ltd. For details of the product, contact DATA LINK Co.,Ltd.
*2 The distance from the GOT to the interface converter (Connection cable 2) + External cable)

(3) When using the external cable (GT11H-C□□□)

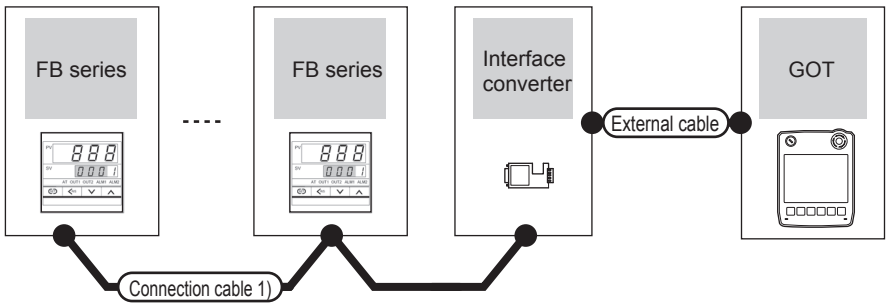

Temperature controller	Connection cable 1)		Interface converter*1		External cable	GOT model	Total distance *2	Number of connectable equipment
Model	Cable model Connection diagram number	Max. distance	Model	Communication type				
FB100 FB400 FB900	User preparing RS485 connection diagram 1)	1200m	CD485/V	RS-232	GT11H-C30(3m) GT11H-C60(6m) User preparing RS232 connection diagram 9)	GT14 Handy	6m	Up to 31 temperature controllers for 1 GOT

*1 Product manufactured by DATA LINK Co.,Ltd. For details of the product, contact DATA LINK Co.,Ltd.
*2 The distance from the GOT to the interface converter (Connection cable 2) + External cable)

53.2.6 Connecting to RB Series (RB100, RB400, RB500, RB700, RB900)

Communication driver
RKC
SR Mini HG(MODBUS)

(1) When using the connector conversion box

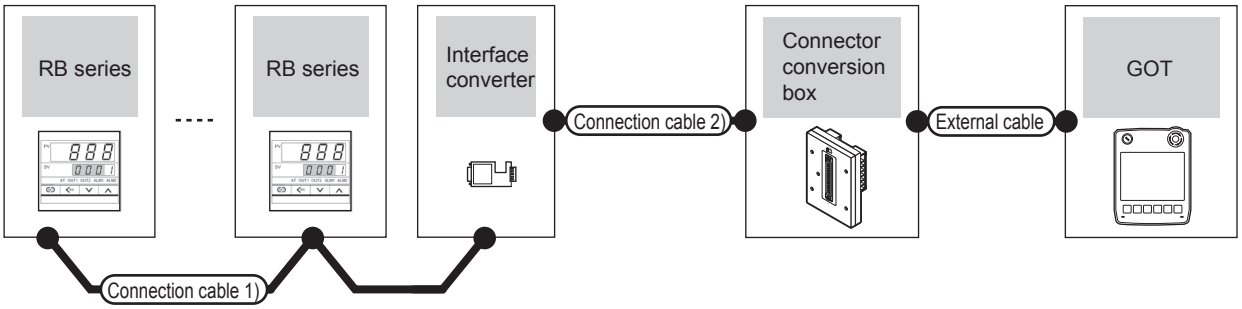

Temperature controller	Connection cable 1)		Interface converter*1		Connection cable 2)	Connector conversion box	External cable	GOT model	Total distance *2	Number of connectable equipment
Model	Cable model Connection diagram number	Max. distance	Model	Communication type	Cable model Connection diagram number					
RB100 RB400 RB500 RB700 RB900	User preparing RS485 connection diagram 1)	1200m	CD485/V	RS-232	User preparing RS232 connection diagram 7)	GT11H-CNB-37S	GT11H-C30-37P (3m)	GT14 Handy	6m	Up to 31 temperature controllers for 1 GOT

*1 Product manufactured by DATA LINK Co.,Ltd. For details of the product, contact DATA LINK Co.,Ltd.
*2 The distance from the GOT to the interface converter (Connection cable 2) + External cable)

(2) When using the external cable (GT11H-C□□□-37P)

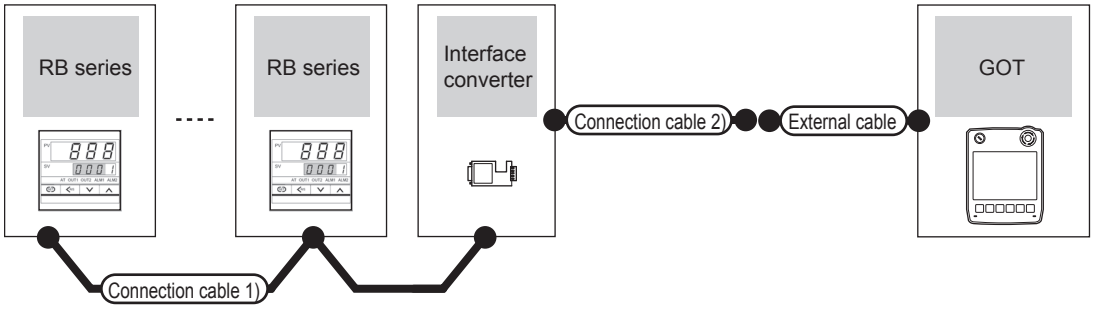

Temperature controller	Connection cable 1)		Interface converter*1		Connection cable 2)	External cable	GOT model	Total distance *2	Number of connectable equipment
Model	Cable model Connection diagram number	Max. distance	Model	Communication type	Cable model Connection diagram number				
RB100 RB400 RB500 RB700 RB900	User preparing RS485 connection diagram 1)	1200m	CD485/V	RS-232	User preparing RS232 connection diagram 8)	GT11H-C30-37P (3m)	GT14 Handy	6m	Up to 31 temperature controllers for 1 GOT

*1 Product manufactured by DATA LINK Co.,Ltd. For details of the product, contact DATA LINK Co.,Ltd.

*2 The distance from the GOT to the interface converter (Connection cable 2) + External cable)

(3) When using the external cable (GT11H-C□□□)

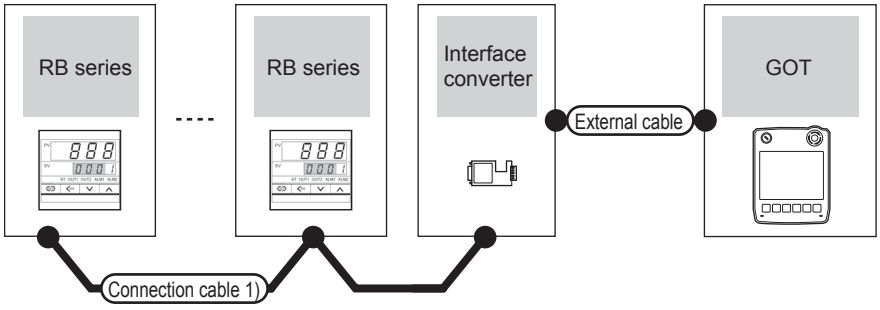

Temperature controller	Connection cable 1)		Interface converter*1		External cable	GOT model	Total distance *2	Number of connectable equipment
Model	Cable model Connection diagram number	Max. distance	Model	Communication type				
RB100 RB400 RB500 RB700 RB900	User preparing RS485 connection diagram 1)	1200m	CD485/V	RS-232	GT11H-C30(3m) GT11H-C60(6m) User preparing RS232 connection diagram 9)	GT14 Handy	6m	Up to 31 temperature controllers for 1 GOT

*1 Product manufactured by DATA LINK Co.,Ltd. For details of the product, contact DATA LINK Co.,Ltd.

*2 The distance from the GOT to the interface converter (Connection cable 2) + External cable)

53.2.7 Connecting to PF900/901, HA400/401, HA900/901, RMC500, MA900/MA901, AG500, THV-A1, SA100/200

■ When connecting to temperature controller

(1) When using the connector conversion box

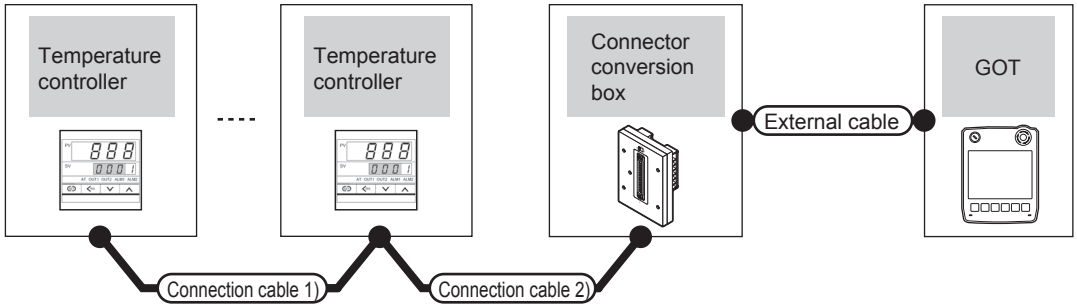

Temperature controller		Connection cable 1)	Connection cable 2)	Connector conversion box	External cable	GOT model	Total distance *1	Number of connectable equipment
Model	Communication type	Cable model Connection diagram number	Cable model Connection diagram number					
PF900/901 HA400/401 HA900/901 MA900/901	RS-232	-	User preparing RS232 connection diagram 4)	GT11H-CNB-37S	GT11H-C30-37P(3m)	GT14 Handy	6m	1 temperature controller for 1 GOT
PF900/901 HA400/401 HA900/901 MA900/901 AG500	RS-422	User preparing RS422 connection diagram 5)	User preparing RS422 connection diagram 6)	GT11H-CNB-37S	GT11H-C30-37P(3m) GT11H-C60-37P(6m) GT11H-C100-37P(10m)	GT14 Handy	13m	Up to 10 temperature controllers for 1 GOT
THV-A1	RS-422	W-BF-02-0500(0.5m) W-BF-02-1000(1m) W-BF-02-3000(3m)*2	User preparing RS422 connection diagram 1)	GT11H-CNB-37S	GT11H-C30-37P(3m) GT11H-C60-37P(6m) GT11H-C100-37P(10m)	GT14 Handy	13m	Up to 10 temperature controllers for 1 GOT

*1 The distance from the GOT to the temperature controller (Connection cable 1) + Connection cable 2) + External cable)

*2 Product manufactured by RKC. For details of the product, contact RKC.

(2) When using the external cable (GT11H-C□□□-37P)

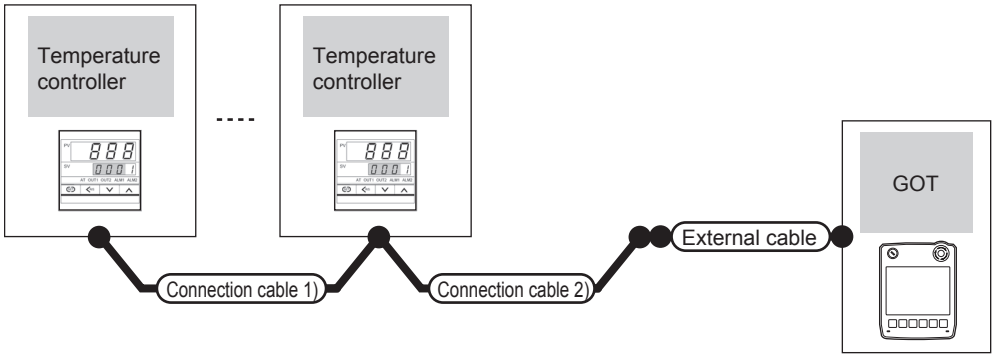

Temperature controller		Connection cable 1)	Connection cable 2)	External cable	GOT model	Total distance *1	Number of connectable equipment
Model	Communication type	Cable model Connection diagram number	Cable model Connection diagram number				
PF900/901 HA400/401 HA900/901 MA900/901	RS-232	-	User preparing RS232 connection diagram 11)	GT11H-C30-37P(3m)	GT14 Handy	6m	1 temperature controller for 1 GOT
PF900/901 HA400/401 HA900/901 MA900/901 AG500	RS-422	User preparing RS422 connection diagram 5)	User preparing RS422 connection diagram 7)	GT11H-C30-37P(3m) GT11H-C60-37P(6m) GT11H-C100-37P(10m)	GT14 Handy	13m	Up to 10 temperature controllers for 1 GOT
THV-A1	RS-422	W-BF-02-0500(0.5m) W-BF-02-1000(1m) W-BF-02-3000(3m)*2	User preparing RS422 connection diagram 2)	GT11H-C30-37P(3m) GT11H-C60-37P(6m) GT11H-C100-37P(10m)	GT14 Handy	13m	Up to 10 temperature controllers for 1 GOT

*1 The distance from the GOT to the temperature controller (Connection cable 1) + Connection cable 2) + External cable)

*2 Product manufactured by RKC. For details of the product, contact RKC.

(3) When using the external cable (GT11H-C□□□)

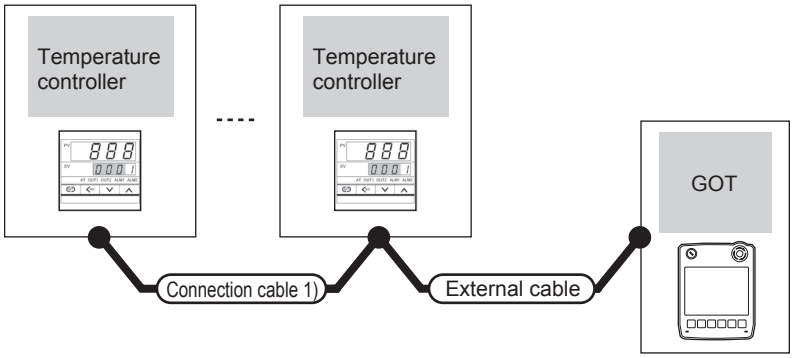

Temperature controller		Connection cable 1)	External cable	GOT model	Total distance *1	Number of connectable equipment
Model	Communication type	Cable model Connection diagram number				
PF900/901 HA400/401 HA900/901 MA900/901	RS-232	-	GT11H-C30(3m) GT11H-C60(6m) User preparing RS232 connection diagram 12)	GT14 Handy	6m	1 temperature controller for 1 GOT
PF900/901 HA400/401 HA900/901 MA900/901 AG500	RS-422	User preparing RS422 connection diagram 5)	GT11H-C30(3m) GT11H-C60(6m) GT11H-C100(10m) User preparing RS422 connection diagram 8)	GT14 Handy	13m	Up to 10 temperature controllers for 1 GOT
THV-A1	RS-422	W-BF-02-0500(0.5m) W-BF-02-1000(1m) W-BF-02-3000(3m)*2	GT11H-C30(3m) GT11H-C60(6m) GT11H-C100(10m) User preparing RS422 connection diagram 3)	GT14 Handy	13m	Up to 10 temperature controllers for 1 GOT

*1 The distance from the GOT to the temperature controller (Connection cable 1) + Connection cable 2) + External cable)

*2 Product manufactured by RKC. For details of the product, contact RKC.

■ When connecting to multiple temperature controllers with interface converter (CD485/V)

(1) When using the connector conversion box

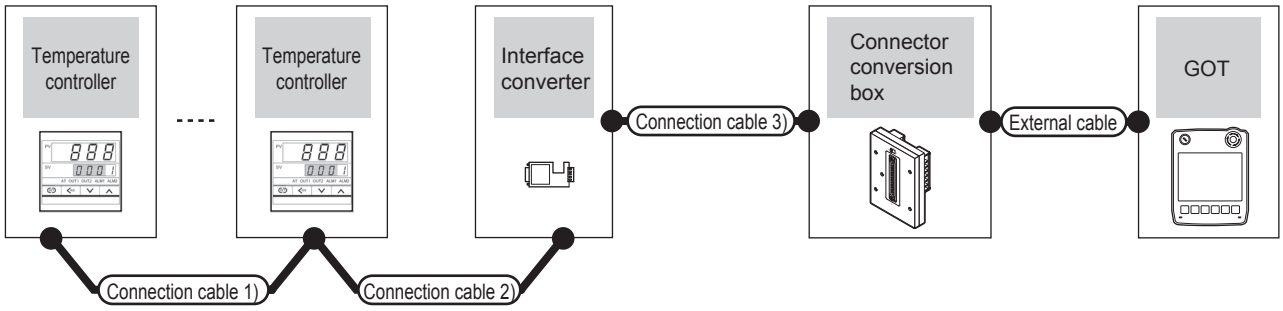

Temperature controller	Connection cable 1)	Connection cable 2)	Max. distance	Interface converter*1		Connection cable 3)	Connector conversion box	External cable	GOT model	Total distance *2	Number of connectable equipment
Model	Cable model Connection diagram number	Cable model Connection diagram number		Model	Communication type	Cable model Connection diagram number					
PF900/901 HA400/401 HA900/901 RMC500 THV-A1 SA100/200	User preparing RS485 connection diagram 1)		1200m	CD485/V	RS-232	User preparing RS232 connection diagram 7)	GT11H-CNB-37S	GT11H-C30-37P (3m)	GT14 Handy	6m	Up to 31 temperature controllers for 1 GOT
THV-A1	W-BF-02-0500(0.5m) W-BF-02-1000(1m) W-BF-02-3000(3m)*2	User preparing RS485 connection diagram 1)	1200m	CD485/V	RS-232	User preparing RS232 connection diagram 7)	GT11H-CNB-37S	GT11H-C30-37P (3m)	GT14 Handy	6m	Up to 31 temperature controllers for 1 GOT

*1 Product manufactured by DATA LINK Co.,Ltd. For details of the product, contact DATA LINK Co.,Ltd.

*2 The distance from the GOT to the interface converter (Connection cable 2) + External cable)

(2) When using the external cable (GT11H-C□□□-37P)

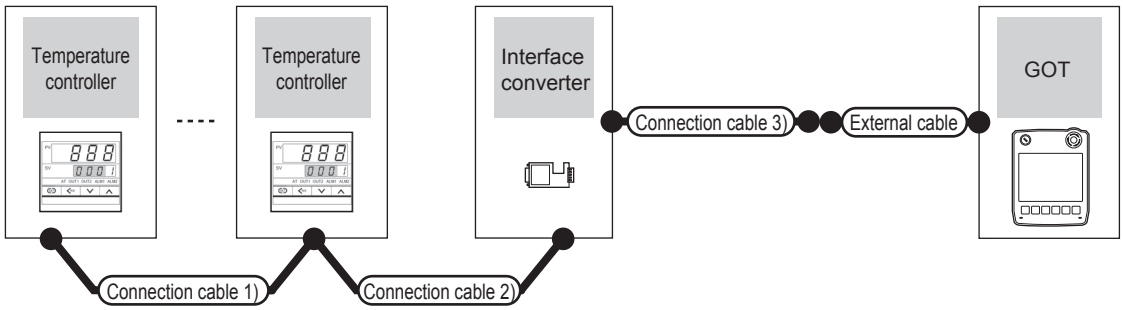

Temperature controller	Connection cable 1)	Connection cable 2)	Max. distance	Interface converter*1		Connection cable 3)	External cable	GOT model	Total distance *2	Number of connectable equipment
Model	Cable model Connection diagram number	Cable model Connection diagram number		Model	Communication type	Cable model Connection diagram number				
PF900/901 HA400/401 HA900/901 RMC500 THV-A1 SA100/200	User preparing RS485 connection diagram 1)		1200m	CD485/V	RS-232	User preparing RS232 connection diagram 8)	GT11H-C30-37P (3m)	GT14 Handy	6m	Up to 31 temperature controllers for 1 GOT
THV-A1	W-BF-02-0500(0.5m) W-BF-02-1000(1m) W-BF-02-3000(3m)*2	User preparing RS485 connection diagram 1)	1200m	CD485/V	RS-232	User preparing RS232 connection diagram 8)	GT11H-C30-37P (3m)	GT14 Handy	6m	Up to 31 temperature controllers for 1 GOT

*1 Product manufactured by DATA LINK Co.,Ltd. For details of the product, contact DATA LINK Co.,Ltd.

*2 The distance from the GOT to the interface converter (Connection cable 2) + External cable)

(3) When using the external cable (GT11H-C□□□)

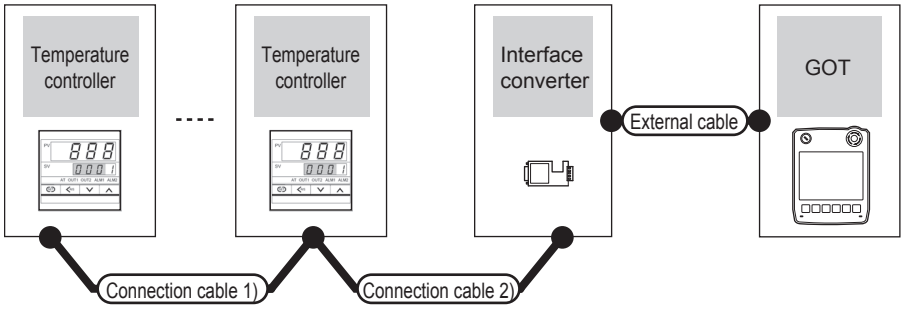

Temperature controller	Connection cable 1)	Connection cable 2)	Max. distance	Interface converter*1		External cable	GOT model	Total distance *2	Number of connectable equipment
Model	Cable model Connection diagram number	Cable model Connection diagram number		Model	Communication type				
PF900/901 HA400/401 HA900/901 RMC500 THV-A1 SA100/200	User preparing RS485 connection diagram 1)		1200m	CD485/V	RS-232	GT11H-C30(3m) GT11H-C60(6m) User preparing RS232 connection diagram 9)	GT14 Handy	6m	Up to 31 temperature controllers for 1 GOT
THV-A1	W-BF-02-0500(0.5m) W-BF-02-1000(1m) W-BF-02-3000(3m)*2	User preparing RS485 connection diagram 1)	1200m	CD485/V	RS-232	GT11H-C30(3m) GT11H-C60(6m) User preparing RS232 connection diagram 9)	GT14 Handy	6m	Up to 31 temperature controllers for 1 GOT

*1 Product manufactured by DATA LINK Co.,Ltd. For details of the product, contact DATA LINK Co.,Ltd.

*2 The distance from the GOT to the interface converter (Connection cable 2) + External cable)

■ When connecting to multiple temperature controllers with interface converter (COM-A)

(1) When using the connector conversion box

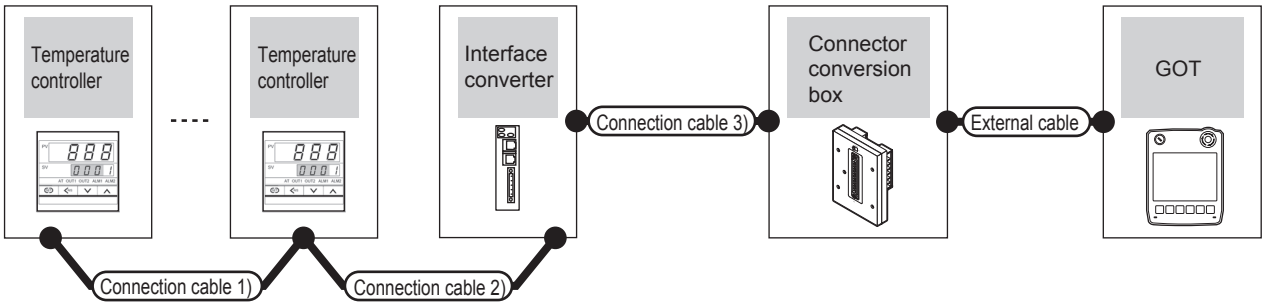

Temperature controller	Connection cable 1)	Connection cable 2)	Max. distance *2	Interface converter*1		Connection cable 3)	Connector conversion box	External cable	GOT model	Total distance *3	Number of connectable equipment
Model	Cable model Connection diagram number	Cable model Connection diagram number		Model	Communication type	Cable model Connection diagram number					
PF900 PF901	User preparing RS422 connection diagram 5)	W-BF-01-0500(0.5m) W-BF-01-1000(1m) W-BF-01-3000(3m)*1	1000m	COM-A	RS-232	W-BF-28-0500(0.5m) W-BF-28-1000(1m) W-BF-28-3000(3m)*1 or User preparing RS232 connection diagram 4)	GT11H-CNB-37S	GT11H-C30-37P (3m)	GT14 Handy	6m	Up to 31 temperature controllers for 1 GOT
THV-A1	W-BF-02-0500(0.5m) W-BF-02-1000(1m) W-BF-02-3000(3m)*1						GT11H-CNB-37S	GT11H-C30-37P (3m)			

*1 Product manufactured by RKC. For details of the product, contact RKC.
*2 The distance from the temperature controller to the interface converter (Connection cable 1) + Connection cable 2))
*3 The distance from the GOT to the interface converter (Connection cable 3) + External cable)

(2) When using the external cable (GT11H-C□□□-37P)

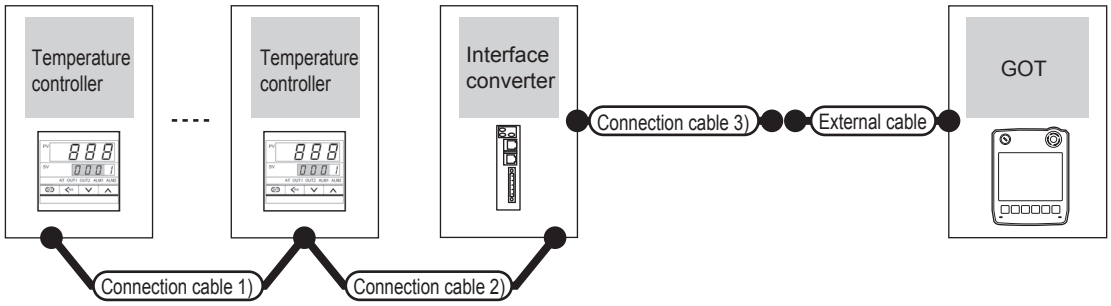

Temperature controller	Connection cable 1)	Connection cable 2)	Max. distance *2	Interface converter*1		Connection cable 3)	External cable	GOT model	Total distance *3	Number of connectable equipment
Model	Cable model Connection diagram number	Cable model Connection diagram number		Model	Communication type	Cable model Connection diagram number				
PF900 PF901	User preparing RS422 connection diagram 5)	W-BF-01-0500(0.5m) W-BF-01-1000(1m) W-BF-01-3000(3m)*1	1000m	COM-A	RS-232	User preparing RS232 connection diagram 5)	GT11H-C30-37P (3m)	GT14 Handy	6m	Up to 31 temperature controllers for 1 GOT
THV-A1	W-BF-02-0500(0.5m) W-BF-02-1000(1m) W-BF-02-3000(3m)*1									

*1 Product manufactured by RKC. For details of the product, contact RKC.
*2 The distance from the temperature controller to the interface converter (Connection cable 1) + Connection cable 2))
*3 The distance from the GOT to the interface converter (Connection cable 3) + External cable)

(3) When using the external cable (GT11H-C□□□)

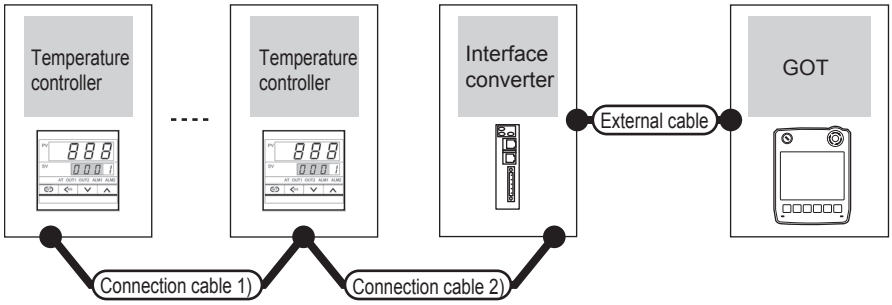

Temperature controller	Connection cable 1)	Connection cable 2)	Max. distance *2	Interface converter*1		External cable	GOT model	Total distance *3	Number of connectable equipment
Model	Cable model Connection diagram number	Cable model Connection diagram number		Model	Communication type				
PF900 PF901	User preparing RS422 connection diagram 5)	W-BF-01-0500(0.5m) W-BF-01-1000(1m) W-BF-01-3000(3m)*1	1000m	COM-A	RS-232	GT11H-C30(3m) GT11H-C60(6m) User preparing RS232 connection diagram 6)	GT14 Handy	6m	Up to 31 temperature controllers for 1 GOT
THV-A1	W-BF-02-0500(0.5m) W-BF-02-1000(1m) W-BF-02-3000(3m)*1								

*1 Product manufactured by RKC. For details of the product, contact RKC.
*2 The distance from the temperature controller to the interface converter (Connection cable 1) + Connection cable 2))
*3 The distance from the GOT to the interface converter (Connection cable 3) + External cable)

53.2.8 Connecting to SRX

(1) When using the connector conversion box

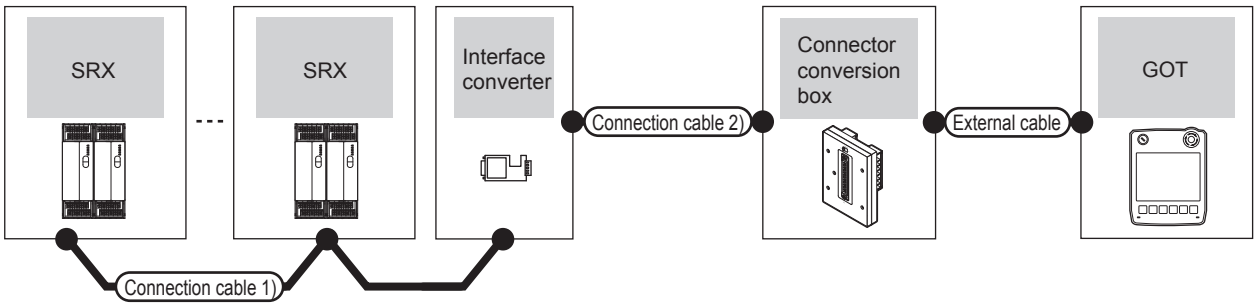

Temperature controller	Connection cable 1)		Interface converter		Connection cable 2)	Connector conversion box	External cable	GOT model	Total distance *2	Number of connectable equipment
Series	Cable model Connection diagram number	Max. distance	Model	Communication type	Cable model Connection diagram number					
SRX	User preparing RS485 connection diagram 1)	1200m	CD485/V*1	RS-232	User preparing RS232 connection diagram 7)	GT11H-CNB-37S	GT11H-C30-37P (3m)	GT14 Handy	6m	Total of X-TIO, X-DI and X-DO: Up to 31 for 1 GOT

*1 Product manufactured by DATA LINK Co.,Ltd. For details of the product, contact DATA LINK Co.,Ltd.
*2 The distance from the GOT to the interface converter (Connection cable 2) + External cable)

(2) When using the external cable (GT11H-C□□□-37P)

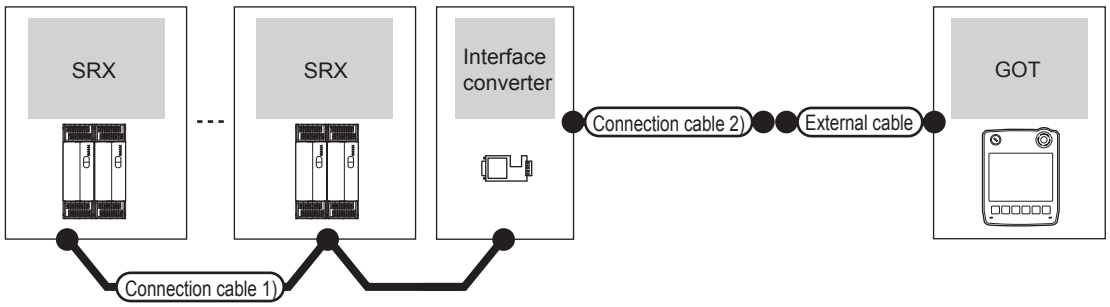

Temperature controller	Connection cable 1)		Interface converter		Connection cable 2)	External cable	GOT model	Total distance *2	Number of connectable equipment
Series	Cable model Connection diagram number	Max. distance	Model	Communication type	Cable model Connection diagram number				
SRX	User preparing RS485 connection diagram 1)	1200m	CD485/V*1	RS-232	User preparing RS232 connection diagram 8)	GT11H-C30-37P (3m)	GT14 Handy	6m	Total of X-TIO, X-DI and X-DO: Up to 31 for 1 GOT

*1 Product manufactured by DATA LINK Co.,Ltd. For details of the product, contact DATA LINK Co.,Ltd.
*2 The distance from the GOT to the interface converter (Connection cable 2) + External cable)

(3) When using the external cable (GT11H-C□□□)

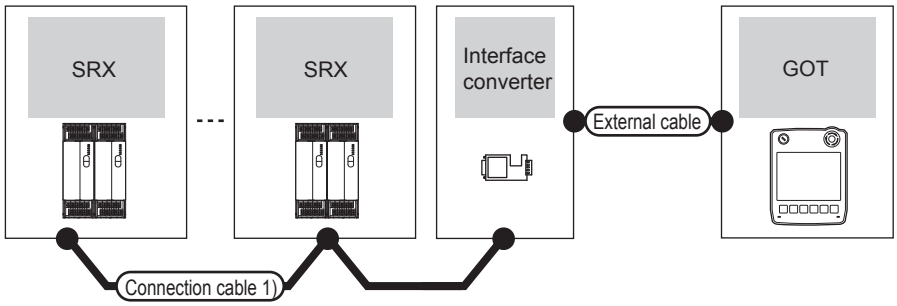

Temperature controller	Connection cable 1)		Interface converter		External cable	GOT model	Total distance *2	Number of connectable equipment
Series	Cable model Connection diagram number	Max. distance	Model	Communication type				
SRX	User preparing RS485 connection diagram 1)	1200m	CD485/V*1	RS-232	GT11H-C30(3m) GT11H-C60(6m) User preparing RS232 connection diagram 9)	GT14 Handy	6m	Total of X-TIO, X-DI and X-DO: Up to 31 for 1 GOT

*1 Product manufactured by DATA LINK Co.,Ltd. For details of the product, contact DATA LINK Co.,Ltd.
*2 The distance from the GOT to the interface converter (Connection cable 2) + External cable)

53.2.9 Connecting to SB series (SB1)

Communication driver
RKC
SR Mini HG(MODBUS)

(1) When using the connector conversion box

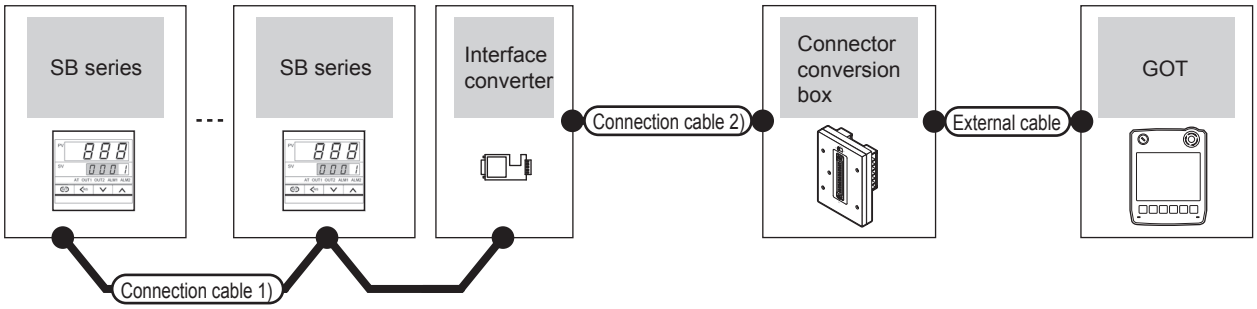

Temperature controller	Connection cable 1)		Interface converter		Connection cable 2)	Connector conversion box	External cable	GOT model	Total distance *2	Number of connectable equipment
Series	Cable model Connection diagram number	Max. distance	Model	Communication type	Cable model Connection diagram number					
SB	User preparing RS485 connection diagram 1)	1200m	CD485/V*1	RS-232	User preparing RS232 connection diagram 13)	GT11H-CNB-37S	GT11H-C30-37P (3m)	GT14 Handy	6m	Up to 31 temperature controllers for 1 GOT

*1 Product manufactured by DATA LINK Co.,Ltd. For details of the product, contact DATA LINK Co.,Ltd.
*2 The distance from the GOT to the interface converter (Connection cable 2) + External cable)

(2) When using the external cable (GT11H-C□□□-37P)

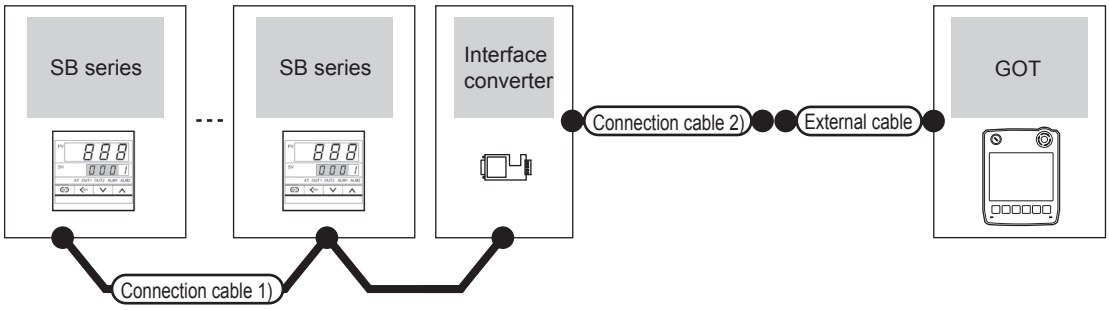

Temperature controller	Connection cable 1)		Interface converter		Connection cable 2)	External cable	GOT model	Total distance *2	Number of connectable equipment
Series	Cable model Connection diagram number	Max. distance	Model	Communication type	Cable model Connection diagram number				
SB	User preparing RS485 connection diagram 1)	1200m	CD485/V*1	RS-232	User preparing RS232 connection diagram 13)	GT11H-C30-37P (3m)	GT14 Handy	6m	Up to 31 temperature controllers for 1 GOT

*1 Product manufactured by DATA LINK Co.,Ltd. For details of the product, contact DATA LINK Co.,Ltd.
*2 The distance from the GOT to the interface converter (Connection cable 2) + External cable)

(3) When using the external cable (GT11H-C□□□)

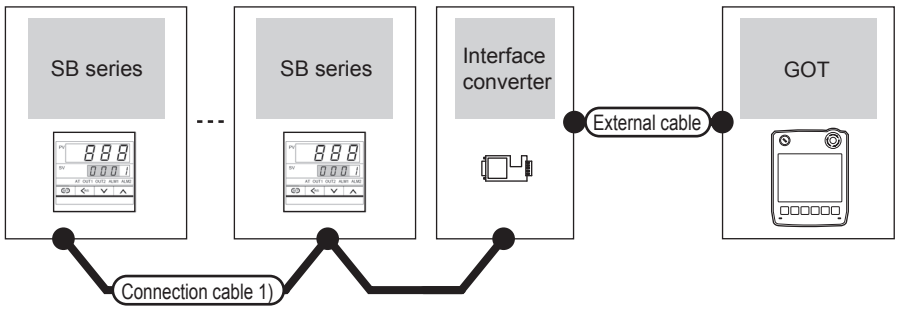

Temperature controller	Connection cable 1)		Interface converter		External cable	GOT model	Total distance *2	Number of connectable equipment
Series	Cable model Connection diagram number	Max. distance	Model	Communication type				
SB	User preparing RS485 connection diagram 1)	1200m	CD485/V*1	RS-232	GT11H-C30-37P(3m)	GT14 Handy	6m	Up to 31 temperature controllers for 1 GOT

*1 Product manufactured by DATA LINK Co.,Ltd. For details of the product, contact DATA LINK Co.,Ltd.
*2 The distance from the GOT to the interface converter (Connection cable 2) + External cable)

53.2.10 Connecting to B400

■ When connecting to temperature controller

(1) When using the connector conversion box

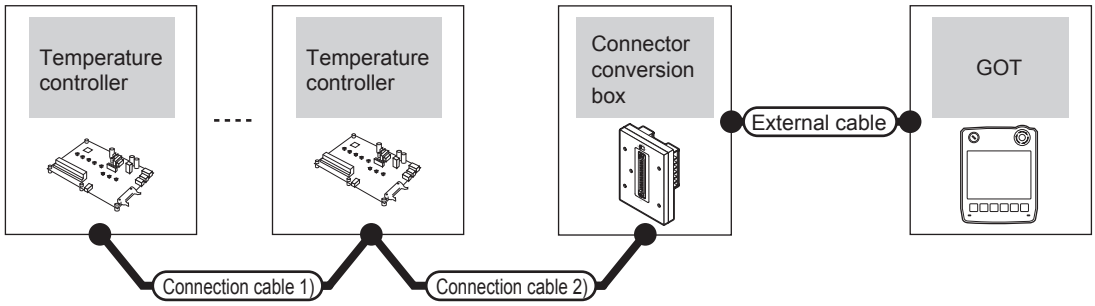

Temperature controller		Connection cable 1)	Connection cable 2)	Connector conversion box	External cable	GOT model	Total distance *1	Number of connectable equipment
Model	Communication type	Cable model Connection diagram number	Cable model Connection diagram number					
B400 (RS-422 specifications)	RS-422	User preparing RS422 connection diagram 5)	User preparing RS422 connection diagram 6)	GT11H-CNB-37S	GT11H-C30(3m) GT11H-C60(6m) GT11H-C100(10m)	GT14 Handy	13m	Up to 10 temperature controllers for 1 GOT

*1 The distance from the GOT to the temperature controller (Connection cable 1) + Connection cable 2) + External cable)
*2 Product manufactured by RKC. For details of the product, contact RKC.

(2) When using the external cable (GT11H-C□□□-37P)

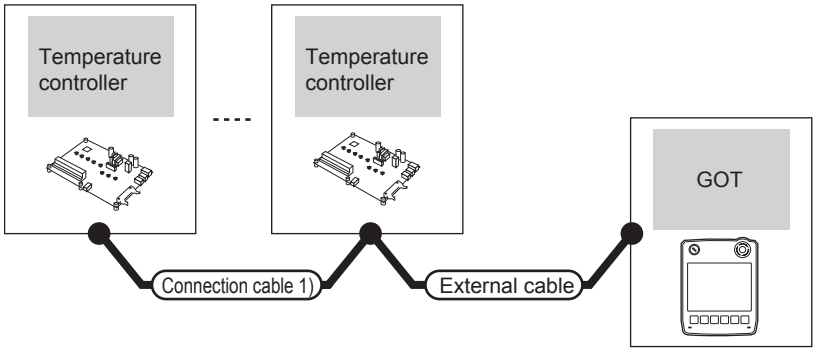

Temperature controller		Connection cable 1)	Connection cable 2)	External cable	GOT model	Total distance *1	Number of connectable equipment
Model	Communication type	Cable model Connection diagram number	Cable model Connection diagram number				
B400 (RS-422 specifications)	RS-422	User preparing RS422 connection diagram 5)	User preparing RS422 connection diagram 6)	GT11H-C30(3m) GT11H-C60(6m) GT11H-C100(10m)	GT14 Handy	13m	Up to 10 temperature controllers for 1 GOT

*1 The distance from the GOT to the temperature controller (Connection cable 1) + Connection cable 2) + External cable)

*2 Product manufactured by RKC. For details of the product, contact RKC.

(3) When using the external cable (GT11H-C□□□)

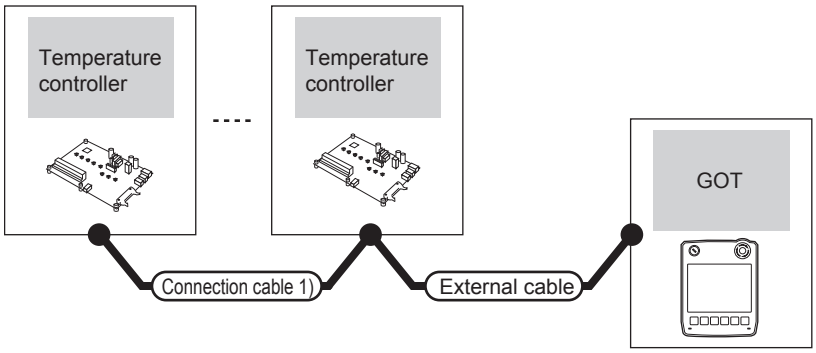

Temperature controller		Connection cable 1)	External cable	GOT model	Total distance *1	Number of connectable equipment
Model	Communication type	Cable model Connection diagram number				
B400 (RS-422 specifications)	RS-422	User preparing RS422 connection diagram 5)	GT11H-C30(3m) GT11H-C60(6m) GT11H-C100(10m)	GT14 Handy	13m	Up to 10 temperature controllers for 1 GOT

*1 The distance from the GOT to the temperature controller (Connection cable 1) + Connection cable 2) + External cable)

*2 Product manufactured by RKC. For details of the product, contact RKC.

53.3 Connection Diagram

The following diagram shows the connection between the GOT and the temperature controller.

53.3.1 RS-232 cable

■ Connection diagram

RS232 connection diagram 1)

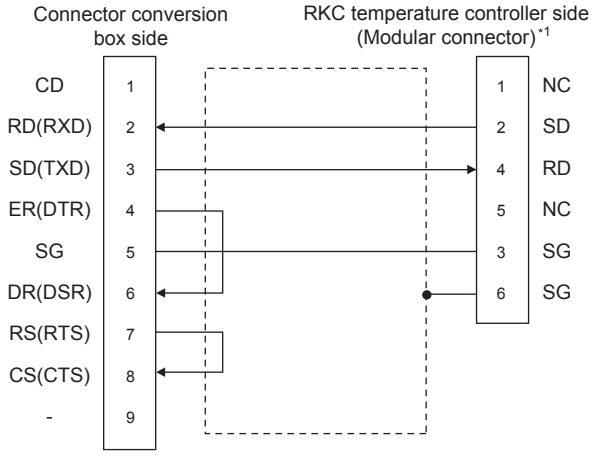

*1 For details of the pin assignment, refer to the following manual.
User's Manual of the RKC temperature controller

RS232 connection diagram 2)

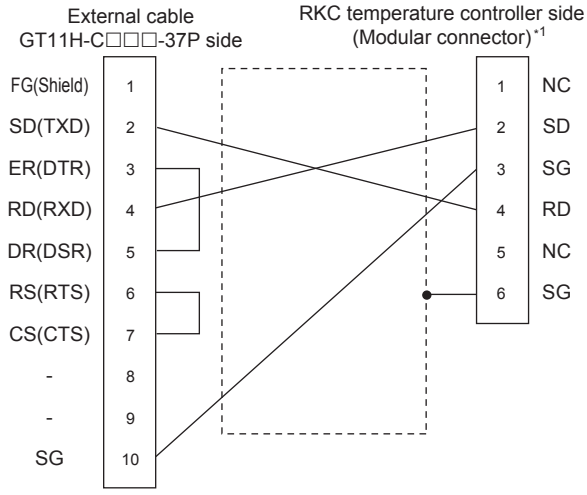

*1 For details of the pin assignment, refer to the following manual.
User's Manual of the RKC temperature controller

RS232 connection diagram 3)

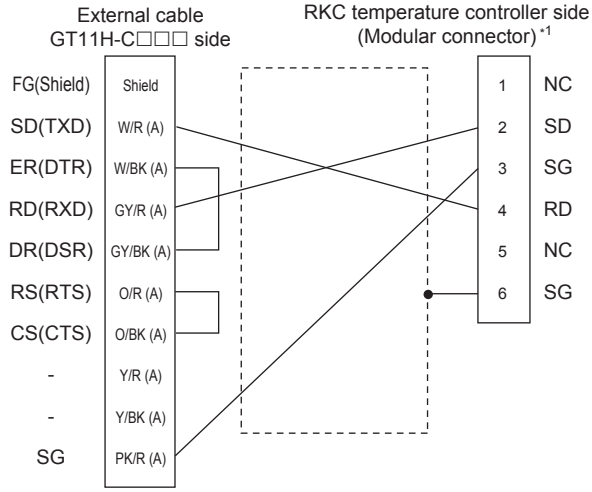

*1 For details of the pin assignment, refer to the following manual.
User's Manual of the RKC temperature controller

RS232 connection diagram 4)

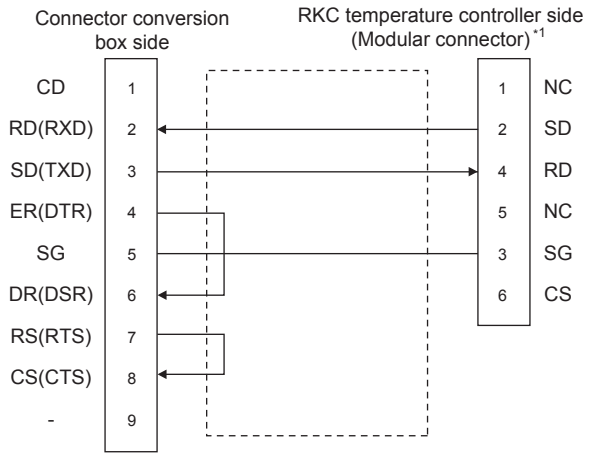

*1 For details of the pin assignment, refer to the following manual.
User's Manual of the RKC temperature controller

RS232 connection diagram 5)

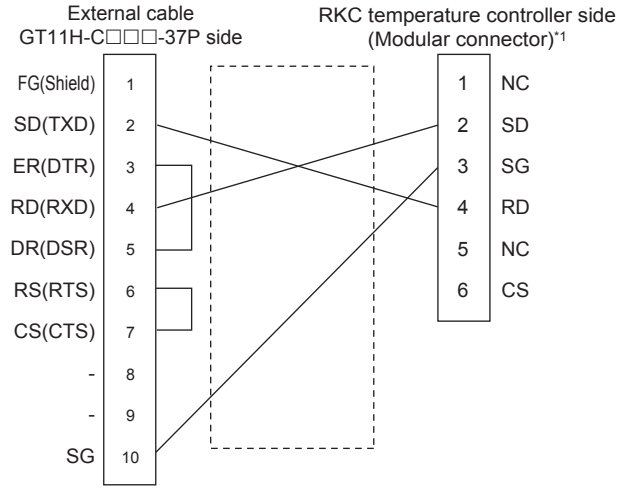

*1 For details of the pin assignment, refer to the following manual.
☞ User's Manual of the RKC temperature controller

RS232 connection diagram 6)

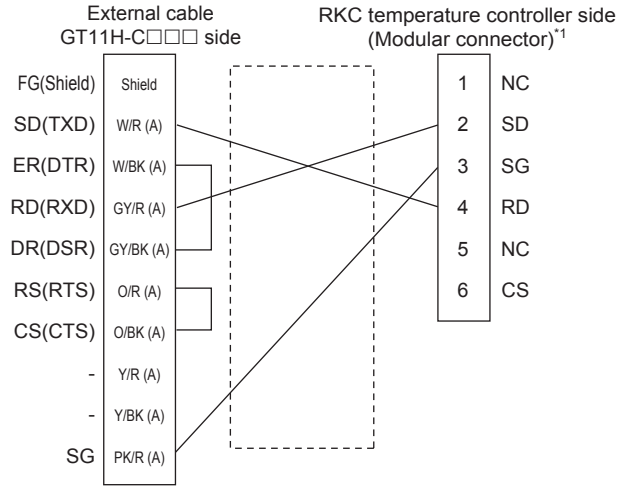

*1 For details of the pin assignment, refer to the following manual.
☞ User's Manual of the RKC temperature controller

RS232 connection diagram 7)

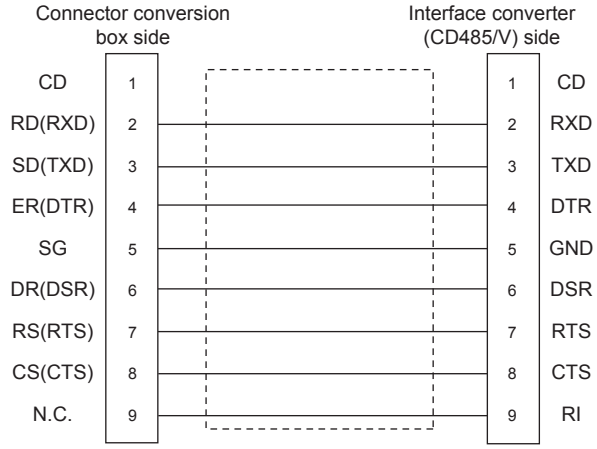

RS232 connection diagram 8)

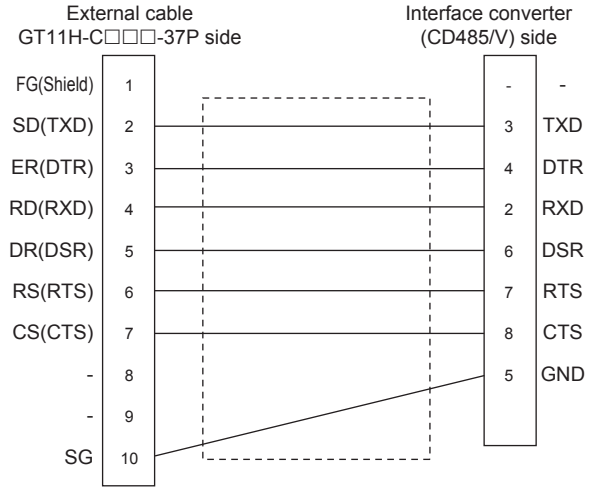

RS232 connection diagram 9)

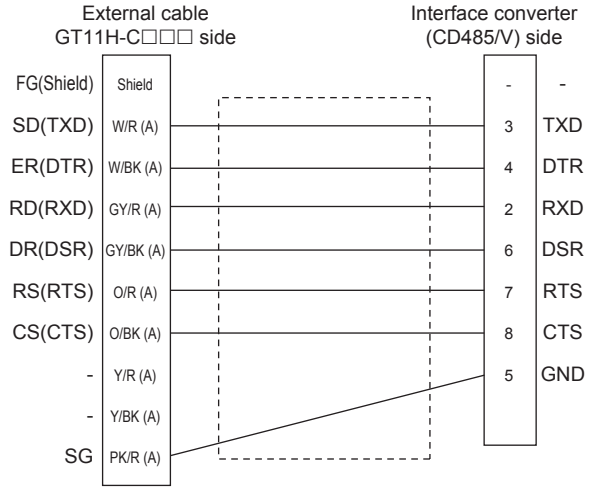

RS232 connection diagram 10)

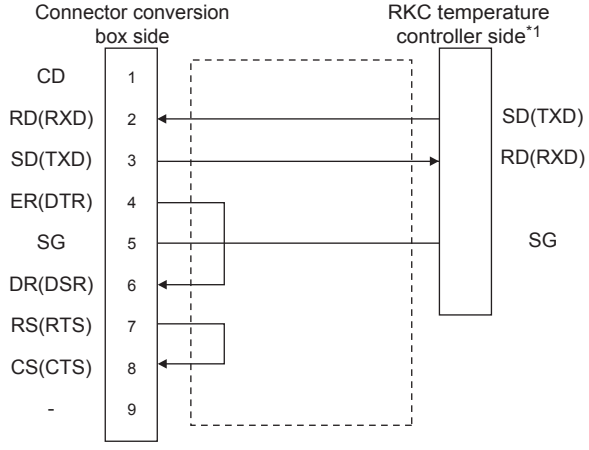

*1 For details of the pin assignment, refer to the following manual.
☞ User's Manual of the RKC temperature controller

RS232 connection diagram 11)

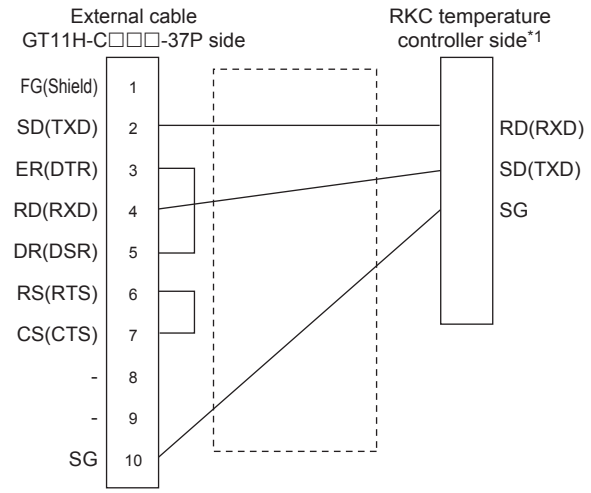

*1 For details of the pin assignment, refer to the following manual.
User's Manual of the RKC temperature controller

RS232 connection diagram 12)

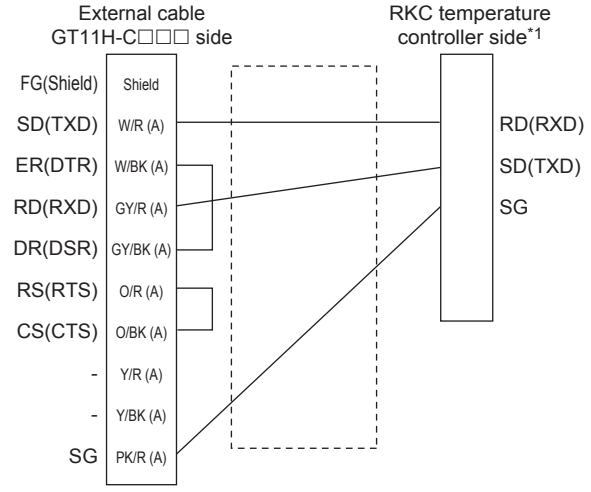

*1 For details of the pin assignment, refer to the following manual.
User's Manual of the RKC temperature controller

RS232 connection diagram 13)

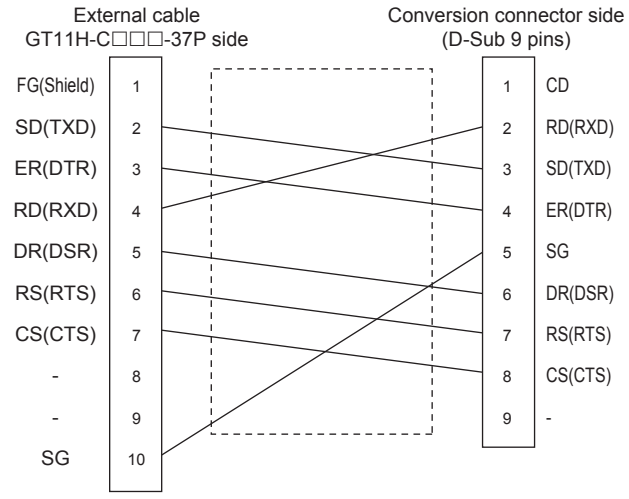

RS232 connection diagram 14)

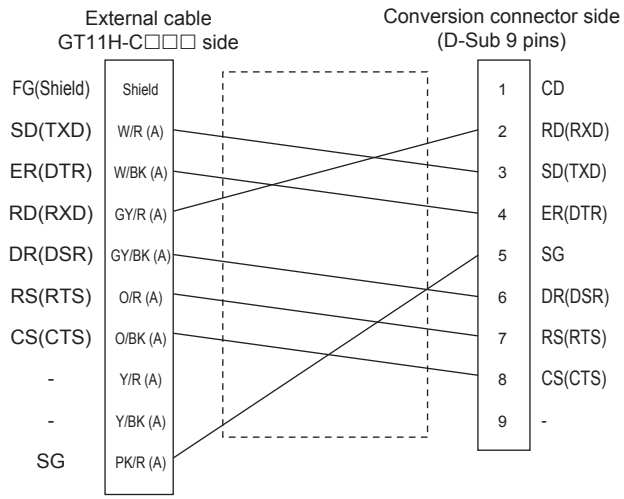

■ Precautions when preparing a cable

(1) Cable length
The total distance (between the GOT and a controller) of RS-232 cable must be 6m or less.

(2) Connector conversion box side connector
For the connector conversion box side connector, refer to the following.
6.6 Connector Conversion Box

(3) External cable side connector
For the connector specifications of the external cable side, refer to the following.
8.2 External Cable, Relay Cable

(4) RKC temperature controller side connector
Use the connector compatible with the RKC temperature controller side module.
For details, refer to user's manual of the RKC temperature controller side.

53.3.2 RS-422 cable

POINT

Differences in polarity between GOT and RKC temperature controllers

The polarity of poles A and B in signal names is reversed between GOT and RKC temperature controllers.
Connect a cable according to the following connection diagrams.

■ Connection diagram

RS422 connection diagram 1)

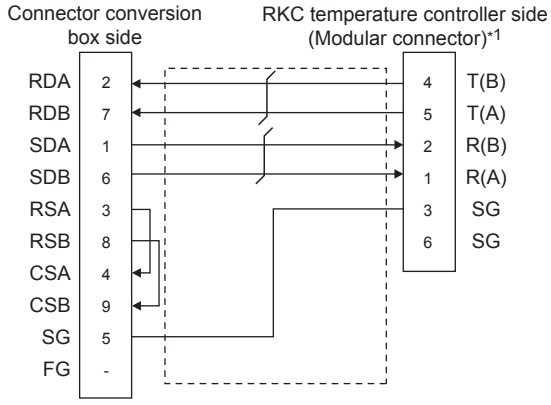

*1 For details of the pin assignment, refer to user's manual of the RKC temperature controller.

RS422 connection diagram 2)

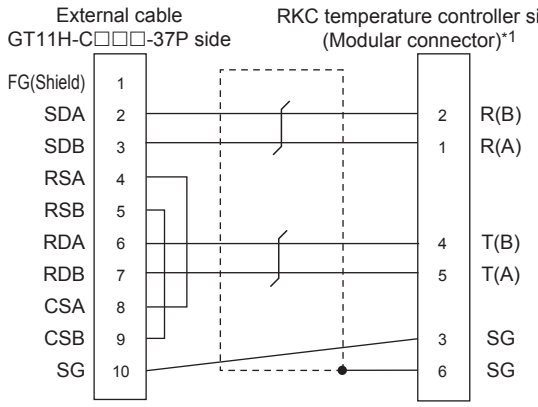

*1 For details of the pin assignment, refer to user's manual of the RKC temperature controller.

RS422 connection diagram 3)

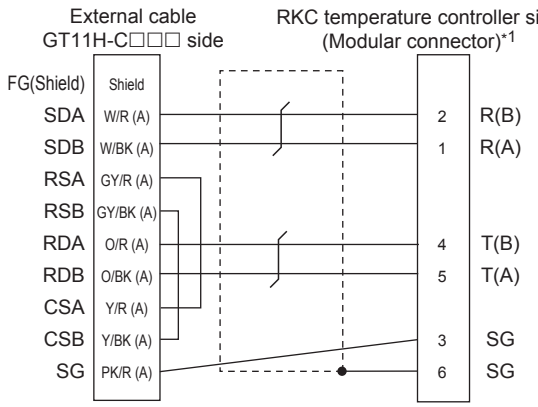

*1 For details of the pin assignment, refer to user's manual of the RKC temperature controller.

RS422 connection diagram 4)

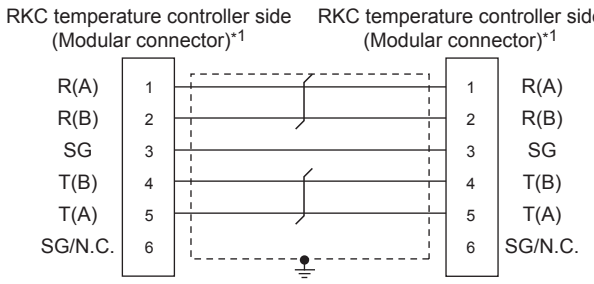

*1 For details of the pin assignment, refer to user's manual of the RKC temperature controller.

RS422 connection diagram 5)

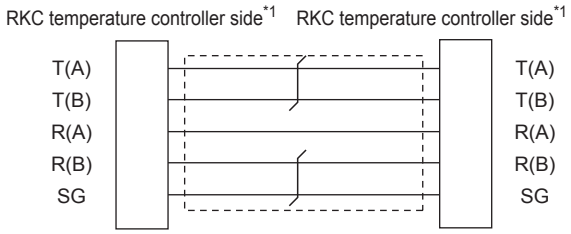

*1 For details of the pin assignment, refer to user's manual of the RKC temperature controller.

RS422 connection diagram 6)

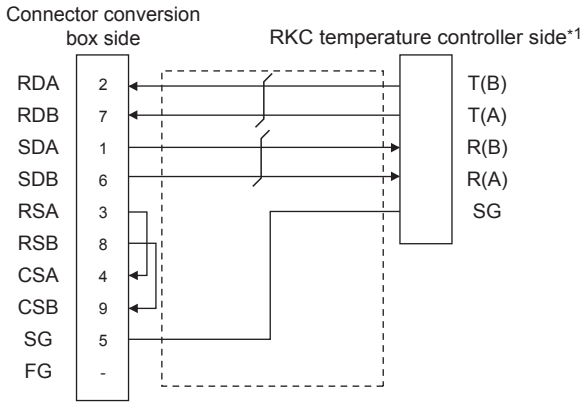

*1 For details of the pin assignment, refer to user's manual of the RKC temperature controller.

RS422 connection diagram 7)

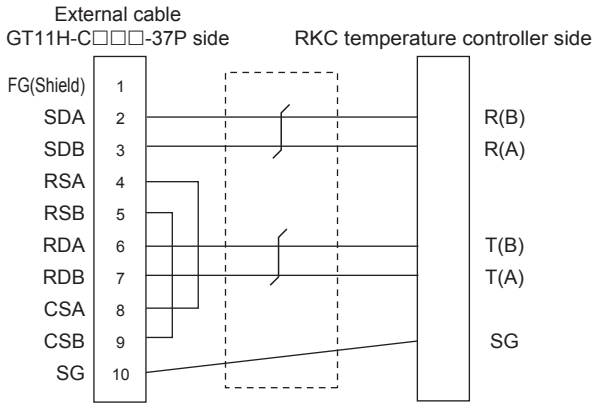

RS422 connection diagram 8)

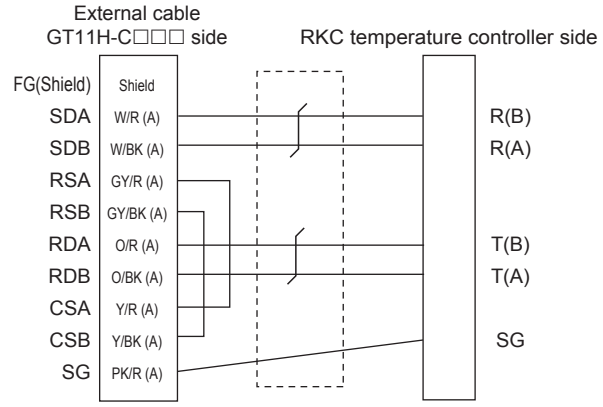

■ Precautions when preparing a cable

(1) Cable length

(a) The length of the RS-422 cable used for connecting the temperature controller to the communication converter
The length of the RS-422 cable must be within the maximum distance.

(b) The length of the RS-422 cable used for connecting the temperature controller to the GOT
The total distance (between GOT and controllers) of RS-422 cable must be 13m or less.

(2) Connector conversion box side connector
For the connector conversion box side connector, refer to the following.

☞ 6.6 Connector Conversion Box

(3) External cable side connector
For the connector specifications of the external cable side, refer to the following.

☞ 8.2 External Cable, Relay Cable

(4) RKC temperature controller side connector
Use the connector compatible with the RKC temperature controller side module.
For details, refer to user's manual of the RKC temperature controller.

53.3.3 RS-485 cable

■ Connection diagram

RS485 connection diagram 1)

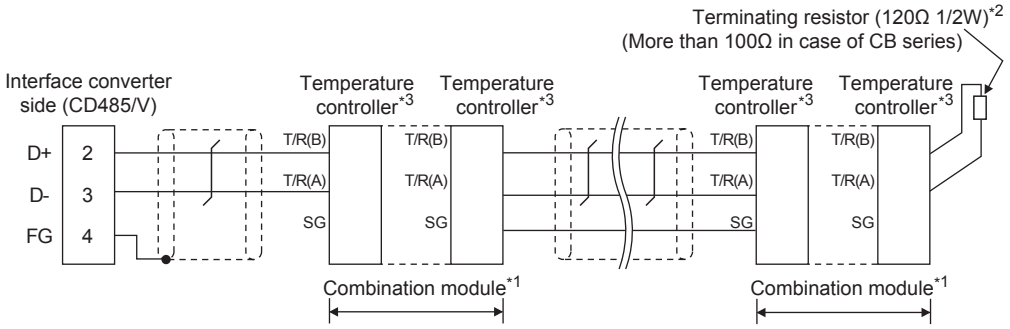

*1 When combining the module, because the communication line is connected between the modules with each other, wire only the communication terminal on the both end of the combination module.

*2 Terminating resistor should be provided for a temperature controller which will be a terminal. When combining the module, provide the terminating resistor to the end of the combination module (the one that is far from the converter). When using X-TIO, turn ON the terminating resistor selector in the terminal base.

*3 For the terminal number of the temperature controller, refer to the following table.

Signal name	Terminal No.																		
	Z-TIO Z-CT	CB100 CB400 CB500 CB900	CB700	FB100		FB400/FB90		RB100 RB400 RB500 RB900	RB700	PF900 PF901 AG500	HA400/401 HA900/901		MA900 MA901	RMC500	THV-A1	X-TIO	SA 100	SA 200	SB1
				COM 1	COM 2	COM 1	COM 2				COM 1	COM 2							
SG	5	13	7	13	16	25	25	13	25	25	13	25	44	13	3	17	1	10	1
T/R(A)	3	14	8	14	17	26	28	14	26	26	14	26	45	14	1	16	2	11	2
T/R(B)	4	15	9	15	18	27	29	15	27	27	15	27	46	15	2	15	3	12	3

■ Precautions when preparing a cable

(1) Cable length
The length of the RS-485 cable must be 1200m or less.

(2) RKC temperature controller side connector
Use the connector compatible with the RKC temperature controller side module.
For details, refer to user's manual of the RKC temperature controller.

■ Connecting terminating resistors

(1) RKC temperature controller side
The terminating resistor must be connected to the RKC temperature controller.

☞ User's Manual of the RKC temperature controller

53.4 GOT Side Settings

53.4.1 Setting communication interface (Communication settings)

Set the channel of the connected equipment.

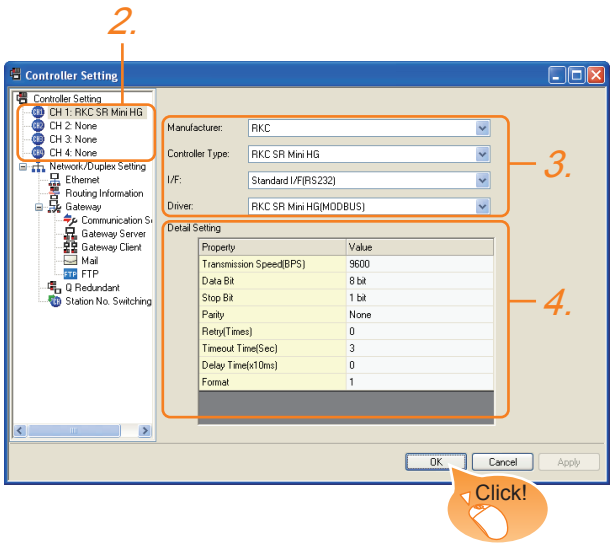

1. Select [Common] → [Controller Setting] from the menu.
2. The Controller Setting window is displayed. Select the channel to be used from the list menu.
3. Set the following items.
   - Manufacturer: RKC
   - Controller Type: RKC SR Mini HG
   - I/F: Interface to be used
   - Driver: RKC SR Mini HG(MODBUS)
4. The detailed setting is displayed after Manufacturer, Controller Type, I/F, and Driver are set. Make the settings according to the usage environment.

   ☞ 53.4.2 Communication detail settings

Click the [OK] button when settings are completed.

POINT

The settings of connecting equipment can be confirmed in [I/F Communication Setting].
For details, refer to the following.

☞ 18.1.2 I/F communication setting

53.4.2 Communication detail settings

Item	Description	Range
Transmission Speed	Set this item when change the transmission speed used for communication with the connected equipment. (Default: 9600bps)	9600bps, 19200bps, 38400bps, 57600bps, 115200bps
Data Bit	Set this item when change the data length used for communication with the connected equipment. (Default: 8bit)	7bit/8bit
Stop Bit	Set this item when change the data length used for communication with the connected equipment. (Default: 1bit)	1bit/2bits
Parity	Specify whether or not to perform a parity check, and how it is performed during communication. (Default: None)	None Even Odd
Retry	Set the number of retries to be performed when a communication error occurs. (Default: 0time)	0 to 5times
Timeout Time	Set the time period for a communication to time out. (Default: 3sec)	3 to 30sec
Delay Time	Set this item to adjust the transmission timing of the communication request from the GOT. (Default: 0ms)	0 to 300ms
Format	Select the communication format. (Default: 1) Format 1: Accessible to H-PCP-J, H-PCP-A, H-PCP-B, SRZ, FB, PF, HA, MA, RMC, SRX series Format 2: Accessible to CB, RB, AG, THV, SA, SB, B400 series	1/2

POINT

(1) Communication interface setting by Utility
The communication interface setting can be changed on the Utility's [Communication setting] after writing [Communication Settings] of project data.
For details on the Utility, refer to the following manual.

☞ 11. COMMUNICATION INTERFACE SETTING (COMMUNICATION SETTING)

(2) Precedence in communication settings
When settings are made by GT Designer3 or the Utility, the latest setting is effective.

53.5 Temperature Controller Side Setting

POINT

RKC temperature controller

For details of RKC temperature controller, refer to the following manual.

☞ User's Manual of the RKC temperature controller

Model		Refer to
Temperature controller	H-PCP-J	53.5.1
	H-PCP-A, H-PCP-B	53.5.2
	Z-TIO module, Z-DIO module, Z-CT module	53.5.3
	Z-COM module	53.5.4
	CB Series	53.5.5
	FB Series	53.5.6
	RB Series	53.5.7
	PF900/901	53.5.8
	HA400/401, HA900/901	53.5.9
	AG500	53.5.10
	RMC500	53.5.11
	MA900, MA901	53.5.12
	THV-A1	53.5.13
	SA100, SA200	53.5.14
	X-TIO module	53.5.15

53.5.1 Connecting to H-PCP-J

■ Communication settings

Make the communication settings of the temperature controller.

Item	Setting range
Transmission speed*1	9600bps, 19200bps, 38400bps
Communication mode	MODBUS
Data bit	8bits
Parity bit	Disable
Stop bit*1	1bit
Unit address*2	0 to F

*1 Adjust the settings with GOT settings.
*2 Select the unit address without overlapping with that of other units.

■ Setting DIP switches

Make the settings of transmission speed, communication mode, data length, parity bit and stop bit.

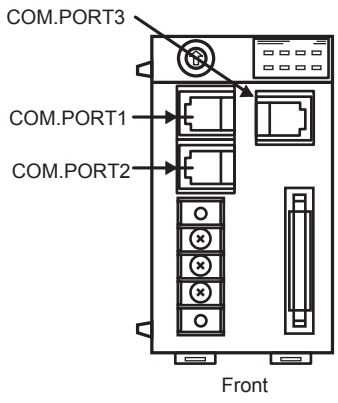

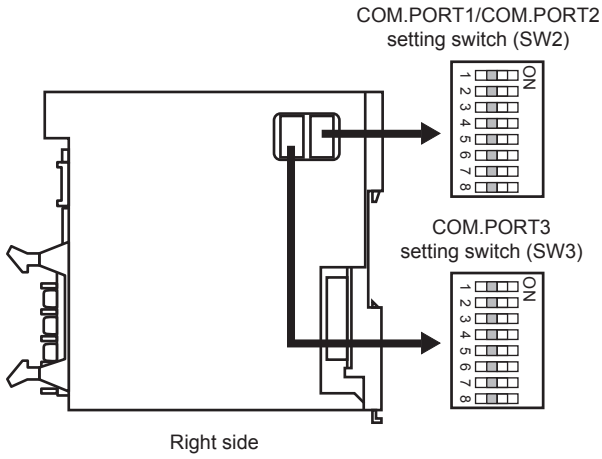

(1) Transmission speed settings

(a) COM.PORT1/COM.PORT2

SW2		Communication speed
3	4	
OFF	OFF	9600bps
ON	OFF	19200bps
OFF	ON	38400bps

(b) COM.PORT3

SW3		Communication speed
3	4	
• OFF	• OFF	9600bps
• ON	• OFF	19200bps
• OFF	• ON	38400bps

(2) Communication mode settings

(a) COM.PORT1/COM.PORT2

SW2				Communication protocol
5	6	7	8	
ON	OFF	OFF	OFF	MODBUS protocol

(b) COM.PORT3

SW3	Communication protocol
5	
ON	MODBUS protocol

(3) Settings of data length, parity bit, and stop bit

(a) COM.PORT1/COM.PORT2

SW2		Data bit configuration
1	2	
OFF	OFF	Data 8-bit, Non parity, Stop 1bit

(b) COM.PORT3

SW3		Data bit configuration
1	2	
OFF	OFF	Data 8-bit, Non parity, Stop 1bit

■ Unit address settings

Set the unit address using the unit address setting switch.

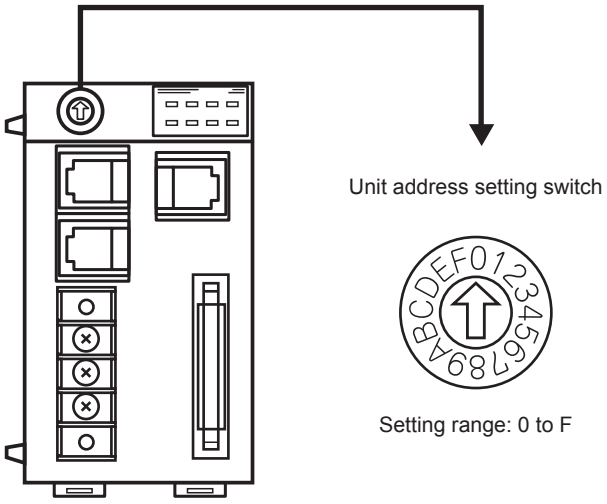

53.5.2 Connecting to H-PCP-A, H-PCP-B

■ Communication settings

Make the communication settings of the temperature controller.

Item	Setting range
Transmission speed*1	9600bps, 19200bps
Data bit	8bits
Parity bit	Disable
Unit address*2	0 to F

*1 Adjust the settings with GOT settings.
*2 Select the unit address without overlapping with that of other units.

■ Setting DIP switches

Make the settings of transmission speed, data length, parity bit, and stop bit.

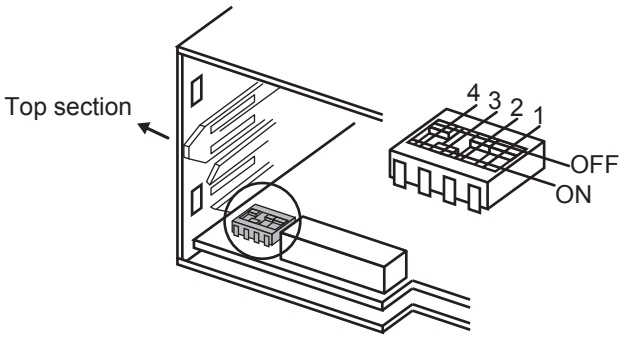

Rear view of module mainframe with mother block removed

(1) Transmission speed settings

3	4	Communication speed
OFF	ON	9600bps
ON	ON	19200bps

(2) Settings of data length and parity bit

1	2	Data bit configuration
OFF	OFF	Data 8-bit, Non parity

■ Unit address settings

Set the unit address using the unit address setting switch.

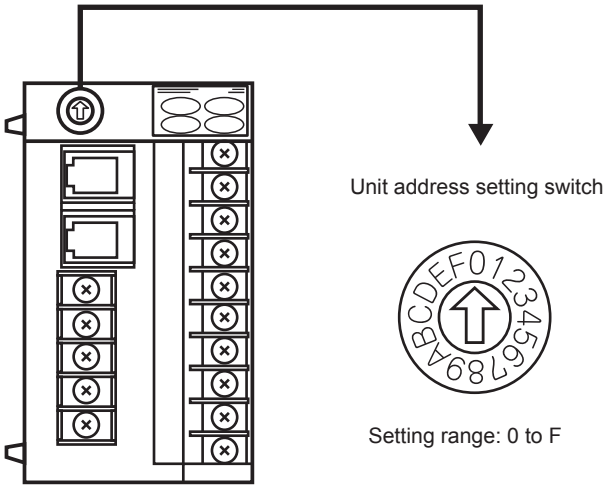

53.5.3 Connecting to Z-TIO, Z-DIO, Z-CT

■ Communication settings

Make the communication settings of the temperature controller.

Item	Setting range
Communication speed*1	9600bps, 19200bps, 38400bps
Communication protocol	MODBUS
Data bit configuration	Data bit: 8bits, Parity: None
	Data bit: 8bits, Parity: Even
	Data bit: 8bits, Parity: Odd
	Stop bit: 1bit (fixed)
Unit address*2	0 to F
Interval time	0 to 250ms

*1 Adjust the settings with GOT settings.
*2 Select the module address without overlapping with that of other units.

■ Setting DIP switches

Make the settings of transmission speed, data bit configuration, communication protocol

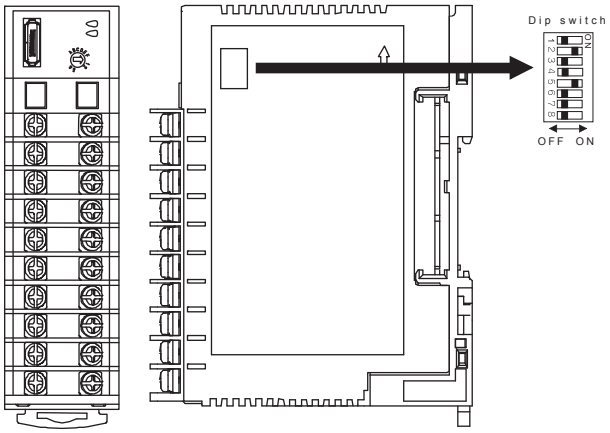

Setting item	Set value	Switch No.					
		1	2	3	4	5	6
Communication speed	9600bps	ON	OFF				
	19200bps	OFF	ON				
	38400bps	ON	ON				
Data bit configuration	Data bit: 8bits, Parity: None			OFF	OFF	ON	
	Data bit: 8bits, Parity: Even			OFF	ON	ON	
	Data bit: 8bits, Parity: Odd			ON	ON	ON	
Communication protocol	MODBUS						ON

■ Unit address settings

Set the unit address using the unit address setting switch.

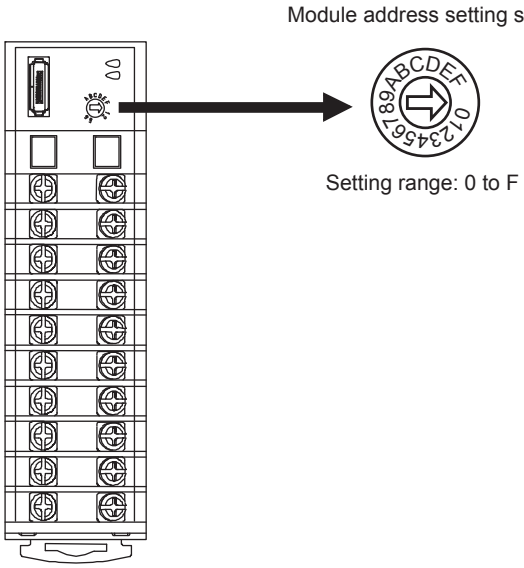

■ Interval time settings

Configure the interval time setting using the RKC communication setting tool (WinPCI).
After the communication is started, set as follows.

Setting item	Set value
Instrument	0
CFG file	ZTIO_rkc.cfg
Interval time	0 to 250ms

53.5.4 Connecting to Z-COM

■ Communication settings

Item	Setting range
Communication speed*1	9600bps, 19200bps, 38400bps
Communication protocol	Host (MODBUS)
Data bit	8bits (Fixed)
Parity	None (fixed)
Stop bit	1bit (Fixed)
Unit address*2	0 to F
Interval time	0 to 250ms
Dip switch settings valid / invalid	Valid

*1 Adjust the settings with GOT settings.
*2 Select the unit address without overlapping with that of other units.

■ Setting DIP switches

Make the settings of transmission speed, data bit configuration, communication protocol.

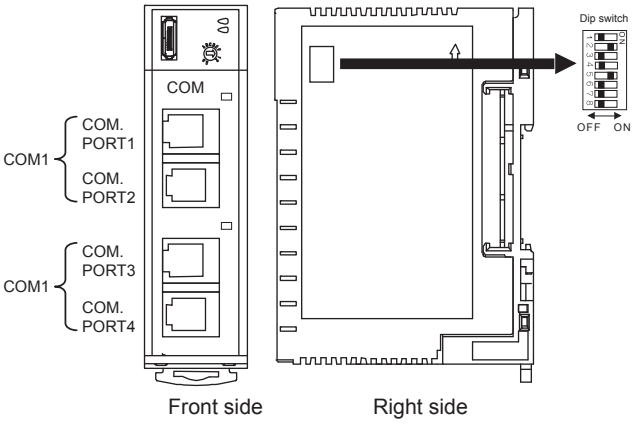

Setting item	Set value	Switch No.							
		1	2	3	4	5	6	7	8
Communication speed (COM1)	9600bps	ON	OFF						
	19200bps	OFF	ON						
	38400bps	ON	ON						
Communication protocol (COM1)	Host (MODBUS)			ON					
Communication speed (COM2)	9600bps				OFF				
	19200bps				ON				
Communication protocol (COM2)	Host (MODBUS)					ON	OFF	OFF	
Dip switch settings valid/invalid	Valid								OFF

■ Unit address settings

Set the unit address using the unit address setting switch.

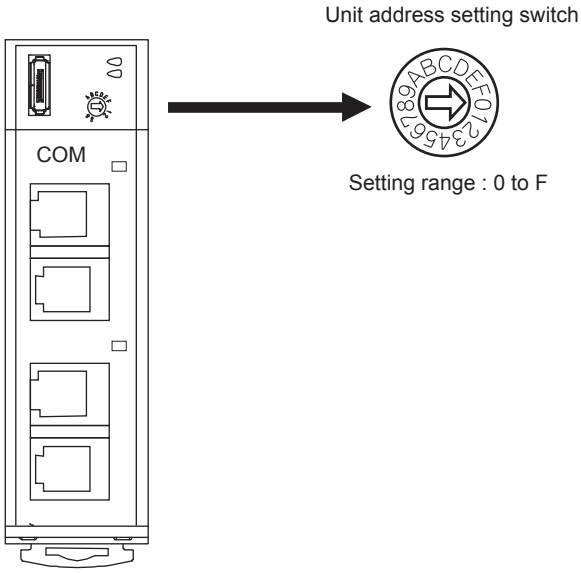

■ Interval time settings

Configure the interval time setting using the RKC communication setting tool (WinPCI).
After the communication is started, set as follows.

Setting item	Set value
Instrument	0
CFG file	ZCOM_rkc.cfg
Communication 1 interval time	0 to 250ms
Communication 2 interval time	

53.5.5 Connecting to CB Series

■ Communication settings

Item	Setting range
Device address*1	1 to 99
Communication speed*2	2: 9600bps 3: 19200bps
Data bit configuration	0: 8/1/None 6: 8/1/Even 7: 8/1/Odd
Interval time	0 to 150

*1 When the setting value is set to 0, a communication is not made.
*2 Adjust the settings with GOT settings.

■ Communication setting mode

Set the communication setting mode using the operation panel of the CB series main unit.
For details of the communication setting mode, refer to the following.

☞ CB series "Communication Instruction Manual"

53.5.6 Connecting to FB Series

■ Communication settings

Item*1	Setting range*1
Communication protocol	1: MODBUS
Device address (Slave address)*2	1 to 99
Communication speed*3	9.6: 9600bps 19.2: 19200bps 38.4: 38400bps
Data bit configuration	Refer to ■ Data bit configuration.
Interval time	0 to 250

*1 Items and setting range are common to communication 1 and communication 2.
*2 When the setting value is set to 0, a communication is not made.
*3 Adjust the settings with GOT settings.

■ Data bit configuration

Set value	Data bit	Parity bit	Stop Bit
8n1	8	None	1
8n2	8	None	2
8E1	8	Even	1
8E2	8	Even	2
8o1	8	Odd	1
8o2	8	Odd	2

■ Communication setting mode

Set the communication setting mode using the operation panel of the FB series main unit.
For details of the communication setting mode, refer to the following.

☞ FB series "Communication Instruction Manual"

53.5.7 Connecting to RB Series

■ Communication settings

Item	Setting range
Communication protocol	1: MODBUS
Device address (Slave address)*1	1 to 99
Communication speed*2	2: 9600bps 3: 19200bps
Data bit configuration	Refer to ■ Data bit configuration.
Interval time	0 to 250

*1 When the setting value is set to 0, a communication is not made.
*2 Adjust the settings with GOT settings.

■ Data bit configuration

Set value	Data bit	Parity bit	Stop Bit
0	8	None	1
1	8	None	2
2	8	Even	1
3	8	Even	2
4	8	Odd	1
5	8	Odd	2

■ Communication setting mode

Set the communication setting mode using the operation panel of the RB series main unit.
For details of the communication setting mode, refer to the following.

☞ RB series "Communication Instruction Manual"

53.5.8 Connecting to PF900

■ Communication settings

Make the communication settings by operating the key of the temperature controller.

Item	Setting range
Communication speed 1*1	9600bps, 19200bps, 38400bps, 57600bps
Communication protocol 1	MODBUS
Data bit configuration 1*1 (Data bit, Parity bit, Stop bit)	[8N1]: 8bits, None, 1bit [8N2]: 8bits, None, 2bits [8E1]: 8bits, Even, 1bit [8E2]: 8bits, Even, 2bits [8O1]: 8bits, Odd, 1bit [8O2]: 8bits, Odd, 2bits
Device address 1*2 (Slave address 1)	1 to 99*4
Interval time*3	0 to 250 (ms)

*1 Adjust the settings with GOT settings.
*2 Select the device address 1 without overlapping with that of other units.
*3 Set the maximum time from the sending of the last character stop bit from the GOT side until the switching of the GOT side to the receiving status (until the temperature controller becomes ready to send). Set as necessary.
*4 When the setting value is set to 0, a communication is not made.

53.5.9 Connecting to HA400, HA900

■ Communication settings

Make the communication settings by operating the key of the temperature controller.
(Communication 1)

Item	Setting range
Communication speed 1*1	9600bps, 19200bps, 38400bps
Data bit configuration 1*1 (Data bit, Parity bit, Stop bit)	[8N1]: 8bits, None, 1bit [8N2]: 8bits, None, 2bits [8E1]: 8bits, Even, 1bit [8E2]: 8bits, Even, 2bits [8O1]: 8bits, Odd, 1bit [8O2]: 8bits, Odd, 2bits
Device address 1*2 (Slave address 1)	1 to 99*4
Interval time*3	0 to 250 (ms)

(Communication 2)

Item	Setting range
Communication speed 2*1	9600bps, 19200bps, 38400bps
Data bit configuration 2*1 (Data bit, Parity bit, Stop bit)	[8N1]: 8bits, None, 1bit [8N2]: 8bits, None, 2bits [8E1]: 8bits, Even, 1bit [8E2]: 8bits, Even, 2bits [8O1]: 8bits, Odd, 1bit [8O2]: 8bits, Odd, 2bits
Device address 2*2 (Slave address 2)	1 to 99*4
Interval time*3	0 to 250 (ms)

*1 Adjust the settings with GOT settings.
*2 Select the device address 1 and 2 without overlapping with that of other units.
*3 Set the maximum time from the sending of the last character stop bit from the GOT side until the switching of the GOT side to the receiving status (until the temperature controller becomes ready to send). Set as necessary.
*4 When the setting value is set to 0, a communication is not made.

53.5.10 Connecting to AG500

■ Communication settings

Make the communication settings by operating the key of the temperature controller.

Item	Setting range
Communication speed*1	9600bps, 19200bps, 38400bps
Communication protocol	MODBUS
Data bit configuration*1 (Data bit, Parity bit, Stop bit)	[8N1]: 8bits, None, 1bit [8N2]: 8bits, None, 2bits [8E1]: 8bits, Even, 1bit [8E2]: 8bits, Even, 2bits [8O1]: 8bits, Odd, 1bit [8O2]: 8bits, Odd, 2bits
Device address*2 (Slave address)	1 to 99*4
Interval time*3	0 to 250 (ms)

*1 Adjust the settings with GOT settings.
*2 Select the device address 1 without overlapping with that of other units.
*3 Set the maximum time from the sending of the last character stop bit from the GOT side until the switching of the GOT side to the receiving status (until the temperature controller becomes ready to send). Set as necessary.
*4 When the setting value is set to 0, a communication is not made.

53.5.11 Connecting to RMC500

■ Communication settings

Make the communication settings by operating the key of the temperature controller.

Item	Setting range
Communication speed*1	9600bps, 19200bps, 38400bps
Communication protocol	MODBUS
MODBUS data*2 Extesion time	0 to 255 (ms)
Data bit configuration*1 (Data bit, Parity bit, Stop bit)	[8N1]: 8bits, None, 1bit [8N2]: 8bits, None, 2bits [8E1]: 8bits, Even, 1bit [8E2]: 8bits, Even, 2bits [8O1]: 8bits, Odd, 1bit [8O2]: 8bits, Odd, 2bits
Device address*3 (Slave address)	1 to 99*4
Interval time*5	0 to 250 (ms)

*1 Adjust the settings with GOT settings.
*2 Set the extension time for the data interval time in the MODBUS communication (which is lower than 24-bit time). Set when the data time interval exceeds 24-bit time.
*3 Select the device address without overlapping with that of other units.
*4 When the setting value is set to 0, a communication is not made.
*5 Set the maximum time from the sending of the last character stop bit from the GOT side until the switching of the GOT side to the receiving status (until the temperature controller becomes ready to send). Set as necessary.

53.5.12 Connecting to MA900, MA901

■ Communication settings

Make the communication settings by operating the key of the temperature controller.

Item	Setting range
Communication speed*1	9600bps, 19200bps
Data bit configuration 1*1 (Data bit, Parity bit, Stop bit)	[8N1]: 8bits, None, 1bit [8N2]: 8bits, None, 2bits [8E1]: 8bits, Even, 1bit [8E2]: 8bits, Even, 2bits [8O1]: 8bits, Odd, 1bit [8O2]: 8bits, Odd, 2bits
Device address*2 (Slave address)	1 to 99*4
Interval time*3	0 to 250 (ms)

*1 Adjust the settings with GOT settings.
*2 Select the device address 1 without overlapping with that of other units.
*3 Set the maximum time from the sending of the last character stop bit from the GOT side until the switching of the GOT side to the receiving status (until the temperature controller becomes ready to send). Set as necessary.
*4 When the setting value is set to 0, a communication is not made.

53.5.13 Connecting to THV-A1

■ Communication settings

Make the communication settings by operating the key of the temperature controller.

Item	Setting range
Communication speed*1	9600bps (fixed)
Data bit configuration*1	Data bit: 8bits (fixed) Parity bit: None (fixed) Stop bit : 1bit (fixed)
Device address*2 (Slave address)	1 to 99*4
Interval time*3	0 to 250 (ms)

*1 Adjust the settings of the GOT side with the temperature controller settings.
*2 Select the device address 1 without overlapping with that of other units.
*3 Set the maximum time from the sending of the last character stop bit from the GOT side until the switching of the GOT side to the receiving status (until the temperature controller becomes ready to send). Set as necessary.
*4 When the setting value is set to 0, a communication is not made.

53.5.14 Connecting to SA100/SA200

■ Communication settings

Make the communication settings by operating the key of the temperature controller.

Item	Setting range
Communication speed*1	9600bps, 19200bps
Data bit configuration*1 (Data bit, Parity bit, Stop bit)	[8N1]: 8bits, None, 1bit [8N2]: 8bits, None, 2bits [8E1]: 8bits, Even, 1bit [8E2]: 8bits, Even, 2bits [8O1]: 8bits, Odd, 1bit [8O2]: 8bits, Odd, 2bits
Device address*2 (Slave address)	1 to 99*4
Interval time*3	0 to 250 (ms)

*1 Adjust the settings with GOT settings.
*2 Select the device address 1 without overlapping with that of other units.
*3 Set the maximum time from the sending of the last character stop bit from the GOT side until the switching of the GOT side to the receiving status (until the temperature controller becomes ready to send). Set as necessary.
*4 When the setting value is set to 0, a communication is not made.

53.5.15 Connecting to X-TIO Module

■ Communication settings

Make the communication settings of the temperature controller.

Item	Setting range
Communication speed*1	9600bps, 19200bps, 38400bps
Communication protocol 1	MODBUS
Data bit configuration	Data bit: 8bits, Parity: None
	Data bit: 8bits, Parity: Even
	Data bit: 8bits, Parity: Odd
	Stop bit: 1bit (fixed)
Module address*2	1 to 99
Internal data bus terminating resistor	When combining the module, turn ON the internal data bus terminating resistor at both ends of the module.
Data interval extension time	0 to 99ms

*1 Adjust the settings with GOT settings.
*2 When the setting value is set to 0, a communication is not made.

■ Setting DIP switches

Make the settings of transmission speed, data bit configuration, communication protocol

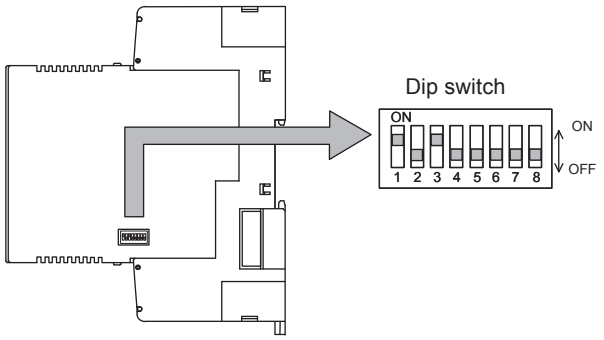

Item	Set value	Switch No.							
		1	2	3	4	5	6	7	8
Communication speed	9600bps	ON	OFF						
	19200bps	OFF	ON						
	38400bps	ON	ON						
Data bit configuration	Data bit: 8bits, Parity: None			ON	OFF	OFF			
	Data bit: 8bits, Parity: Even			ON	OFF	ON			
	Data bit: 8bits, Parity: Odd			ON	ON	ON			
Communication protocol	MODBUS						ON		
Internal data bus termination resistor setting	OFF								OFF
	ON								ON
Data interval extension time	0 to 99ms				ON	OFF	ON		

■ Unit address settings

Set the unit address using the rotary switch (address setting switch).

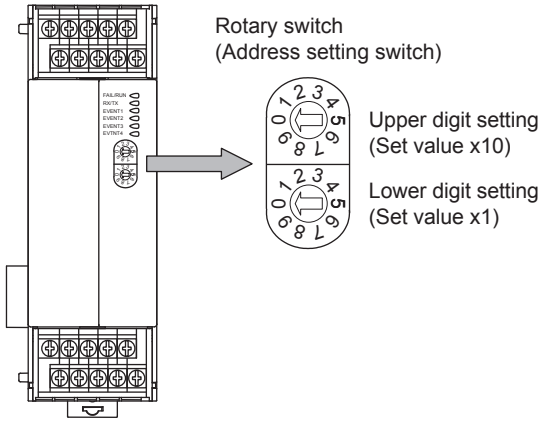

■ Data interval extension time settings

Set the data interval extension time as the following procedure.

1. Turn the power of the module OFF.
2. Set the DIP switch 4 and 6 to "ON" and 5 to "OFF".
3. Set the data interval extension time using the rotary switch (address setting switch).
   The setting method is the same as that of the module address.
4. Turn the power of the module ON.
   The FAIL/RUN lamp lights in green and the set time becomes valid.
5. Turn the power of the module OFF again and set the DIP switches and rotary switch to the original position.

53.5.16 Connecting to SB Series

■ Communication settings

Item	Setting range*1
Communication protocol	1: MODBUS
Device address (Slave address)*1	1 to 99
Communication speed*2	2: 9600bps 3: 19200bps
Data bit configuration	Refer to ■ Data bit configuration.
Interval time*3	0 to 250

*1 When the setting value is set to 0, a communication is not made.
*2 Adjust the settings with GOT settings.
*3 Set the maximum time from the sending of the last character stop bit from the GOT side until the switching of the GOT side to the receiving status (until the temperature controller becomes ready to send). Set as necessary.

■ Data bit configuration

Set value	Data bit	Parity bit	Stop bit
0	8	None	1
1	8	None	2
2	8	Even	1
3	8	Even	2
4	8	Odd	1
5	8	Odd	2

■ Communication setting mode

Set the communication settings for the SB series with the front key switch. For details of the settings, refer to the following manual.

☞ 1-channel Type Temperature Controller with Built-in SSR SB1 Instruction Manual

53.5.17 Connecting to B400

■ Communication settings

Set the communication settings for the B400 series with the rotary switch and the DIP switch.
For the operation of the B400 series, refer to the manual of the B400 series.

Item	Setting range	Setting
Unit address settings (CH1 to CH8)	0 to 99*1	(1)Rotary switch setting (SW1 and SW2)
Communication speed	4800bps, 9600bps, 19200bps, 38400bps	(2)DIP switch setting (SW3)
Data bit configuration	0 to 5	
Communication specifications setting	RS-422A, RS-485	(3)DIP switch setting (SW4)
Terminating resistor setting	With, Without	

*1 When 98 or 99 is set, the same communication address will be set as the one when 97 is set.

(1) Rotary switch setting (SW1 and SW2)
Set the unit address with the rotary switch.

Rotary switch
(Address setting switch)

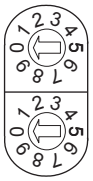

SW1: Lower digit setting (Set value ×1)

SW2: Upper digit setting (Set value ×10)

Item	Setting range
Unit address settings (CH1 to CH8)	The setting value of the rotary switch plus 1 is the communication address.
Unit address settings (CH8 to CH8)	The setting value of the rotary switch plus 2 is the communication address.

(2) DIP switch setting (SW3)
Set the communication speed and the data bit configuration with the DIP switch (SW3).

DIP switch (SW3)

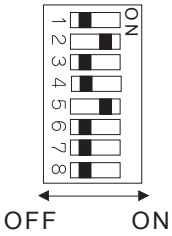

Setting item	Set value	Switch No.							
		1	2	3	4	5	6	7	8
Communication speed	4800bps	OFF	OFF						
	9600bps	ON	OFF						
	19200bps	OFF	ON						
	38400bps	ON	ON						
Data bit configuration	Data bit: 8bits, Parity: None, Stop bit: 2bits			OFF	OFF				
	Data bit: 8bits, Parity: None, Stop bit: 1bit			ON	OFF				
	Data bit: 8bits, Parity: Even, Stop bit: 1bit			ON	OFF				
	Data bit: 8bits, Parity: Odd, Stop bit: 1bit			ON	ON				

(3) DIP switch setting (SW4)
Set the communication specifications and the terminating resistor with the DIP switch (SW4).

DIP switch (SW4)

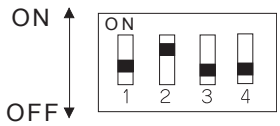

Setting item	Set value	Switch No.			
		1	2	3	4
Communication specifications setting	RS-422A	OFF	OFF		
	RS485	ON	ON		
Terminating resistor setting	Enable				ON
	Disable				OFF

53.5.18 Station number setting

Set each station number so that no station number overlaps.

The station number can be set without regard to the cable connection order. There is no problem even if station numbers are not consecutive.

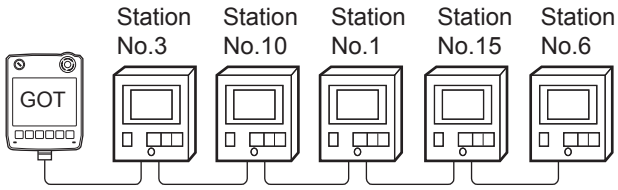

Examples of station number setting

(1) Direct specification

The station number setting range of the temperature controller side differs from that of the GOT side. Specify the station No. of the temperature controller to be changed when setting devices referring the following table.

Temperature controller	Module address setting of temperature controller side	GOT side Station number setting	Remark
H-PCP-J H-PCP-A H-PCP-B Z-TIO Z-COM	0 to F (Hexadecimal)	1 to 16 (Decimal)	The GOT side station number setting is the module address setting value +1.
Z-DIO	0 to F (Hexadecimal)	17 to 32 (Decimal)	The GOT side station number setting is the module address setting value +17.
Z-CT	0 to F (Hexadecimal)	33 to 48 (Decimal)	The GOT side station number setting is the module address setting value +33.
X-TIO	1 to 99 (Decimal)	2 to 100 (Decimal)	The GOT side station number setting is the module address setting value +1.
CB, FB, RB, PF, AG, HA, MA, RMC, THV, SA, SB	1 to 99 (Decimal)	1 to 99 (Decimal)	The GOT side station number setting is the same as the module address setting value.
B400	0 to 99 (Decimal)	0 to 99 (Decimal)	The GOT side station number setting is the module address setting value +1 or +2.

(2) Indirect specification

When setting the device, indirectly specify the station number of the inverter of which data is to be changed using the 16-bit GOT internal data register (GD10 to GD25).

When specifying the station No. from 100 to 115 on GT Designer3, the value of GD10 to GD25 compatible to the station No. specification will be the station No. of the temperature controller.

Specification station No.	Compatible device	Setting range
100	GD10	1 to 99 For the setting other than the above, error (dedicated device is out of range) will occur.
101	GD11	
102	GD12	
103	GD13	
104	GD14	
105	GD15	
106	GD16	
107	GD17	
108	GD18	
109	GD19	
110	GD20	
111	GD21	
112	GD22	
113	GD23	
114	GD24	
115	GD25	

53.6 Device Range that Can Be Set

For details on the device range of controllers that can be used on GT14 Handy, refer to the following manuals.

☞ GT Designer3 Version1 Screen Design Manual (Fundamentals)

☞ GOT1000 Series Connection Manual (Non-Mitsubishi Products 2) for GT Works3

53.7 Precautions

■ Station number setting of the temperature controller system

Make sure to establish temperature controller system with No.01 station.

■ GOT clock control

Since the temperature controller does not have a clock function, the settings of "time adjusting" or "time broad cast" by GOT clock function will be disabled.

■ Cutting the portion of multiple connection of the controller

By setting GOT internal device, GOT can cut the portion of multiple connection of the controller. For example, faulty station that has communication timeout can be cut from the system.
For details of the setting contents of GOT internal device, refer to the following manual.

☞ GT Designer3 Version1 Screen Design Manual

54. CONNECTION TO ALLEN-BRADLEY PLC

54.1 Connectable Model List

The following table shows the connectable models.

Series	Model	Clock	Communication type	GT14 Handy	Refer to
SLC500	SLC500-20	×	RS-232	○	54.2.1
	SLC500-30				
	SLC500-40				
	SLC5/01				
	SLC5/02				
	SLC5/03	○	RS-232	○	
	SLC5/04				
	SLC5/05				
MicroLogix1000 (Digital CPU)	1761-L10BWA	×	RS-232	○	54.2.2
	1761-L10BWB				
	1761-L16AWA				
	1761-L16BWA				
	1761-L16BWB				
	1761-L16BBB				
	1761-L32AWA				
	1761-L32BWA				
	1761-L32BWB				
	1761-L32BBB				
	1761-L32AAA				
MicroLogix1000 (Analog CPU)	1761-L20AWA-5A	×	RS-232	○	
	1761-L20BWA-5A				
	1761-L20BWB-5A				
MicroLogix1200	1762-L24BWA	×	RS-232	○	
MicroLogix1400	1766-L32AWA	×	RS-232	○	
MicroLogix1500	1764-LSP	×	RS-232	○	
ControlLogix	1756-L	×	RS-232 Ethernet	○	54.2.3 54.3.1
	1756-L1M1				
	1756-L1M2				
	1756-L1M3				
	1756-L61				
	1756-L62				
	1756-L63				
	1756-L55M12				
	1756-L55M13				
	1756-L55M14				
	1756-L55M16				
	1756-L55M22				
	1756-L55M23				
	1756-L55M24				
CompactLogix	1769-L31	×	RS-232 Ethernet	○	54.2.3 54.3.1
	1769-L32E				
	1769-L32C				
	1769-L35E				
	1769-L35CR				
	1756-L72S	×	Ethernet	○	54.3.1
FlexLogix	1794-L33	×	RS-232	○	54.3.1
	1794-L34				

54.2 Serial connection

54.2.1 System configuration for connecting to SLC500 Series

■ When connecting to one PLC

(1) When using the connector conversion box

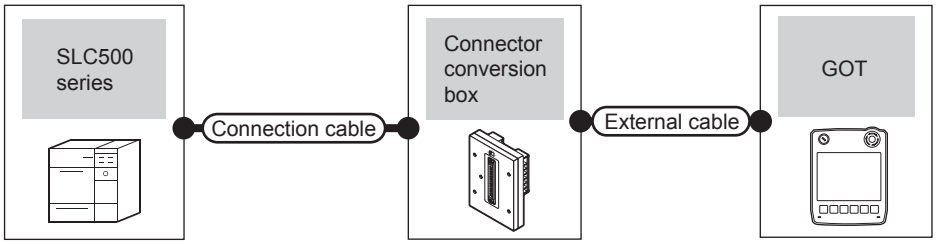

PLC		Connection cable	Connector conversion box	External cable	GOT model	Total distance	Number of connectable equipment
Series	Communication type	Cable model Connection diagram number					
SLC500	RS-232	GT09-C30R20701-9S(3m) or User preparing RS232 connection diagram 1)	GT11H-CNB-37S	GT11H-C30-37P(3m)	GT14 Handy	6m	1 GOT for 1 PLC

(2) When using the external cable (GT11H-C□□□-37P)

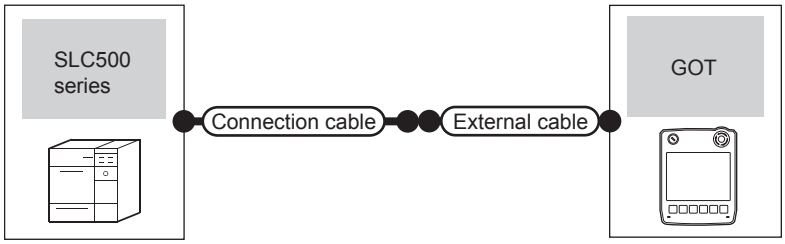

PLC		Connection cable	External cable	GOT model	Total distance	Number of connectable equipment
Series	Communication type	Cable model Connection diagram number				
SLC500	RS-232	User preparing RS232 connection diagram 2)	GT11H-C30-37P(3m)	GT14 Handy	6m	1 GOT for 1 PLC

(3) When using the external cable (GT11H-C□□□)

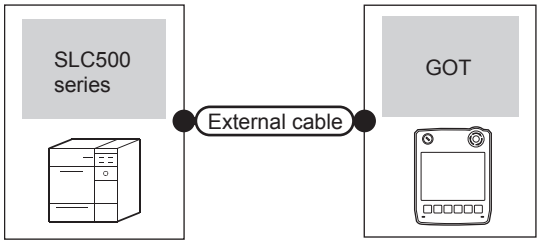

PLC		External cable	GOT model	Total distance	Number of connectable equipment
Series	Communication type				
SLC500	RS-232	GT11H-C30(3m) GT11H-C60(6m) User preparing RS232 connection diagram 3)	GT14 Handy	6m	1 GOT for 1 PLC

■ When connecting to multiple PLCs

(1) When using the connector conversion box

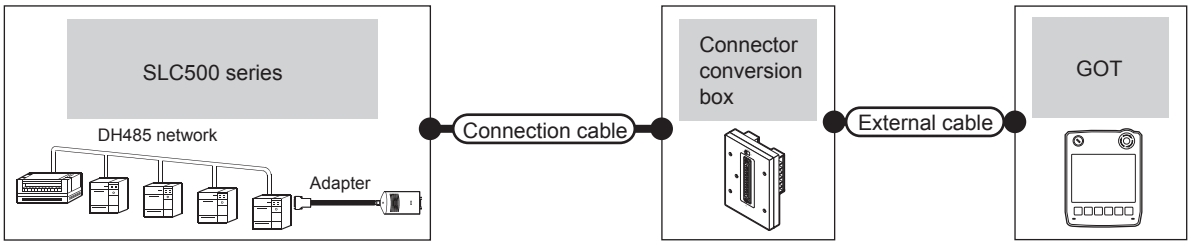

PLC			Connection cable	Connector conversion box	External cable	GOT model	Total distance *2	Number of connectable equipment
Series	Adapter*1	Communication type	Cable model Connection diagram number					
SLC500	1770-KF3	RS-232	User preparing RS232 connection diagram 4)	GT11H-CNB-37S	GT11H-C30-37P(3m)	GT14 Handy	6m	1 GOT for 1 adapter

*1 Allen-Bradley product manufactured by Rockwell Automation, Inc. For details of this product, contact Rockwell Automation, Inc.
*2 The distance from the GOT to the adapter (Connection cable + External connection cable)

(2) When using the external cable (GT11H-C□□□-37P)

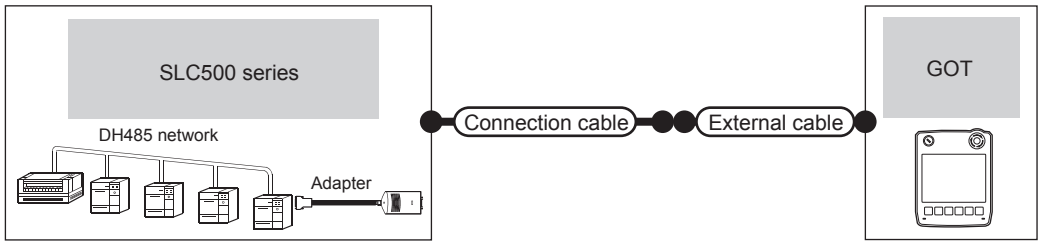

PLC			Connection cable	External cable	GOT model	Total distance *2	Number of connectable equipment
Series	Adapter*1	Communication type	Cable model Connection diagram number				
SLC500	1770-KF3	RS-232	User preparing RS232 connection diagram 5)	GT11H-C30-37P(3m)	GT14 Handy	6m	1 GOT for 1 adapter

*1 Allen-Bradley product manufactured by Rockwell Automation, Inc. For details of this product, contact Rockwell Automation, Inc.
*2 The distance from the GOT to the adapter (Connection cable + External connection cable)

(3) When using the external cable (GT11H-C□□□)

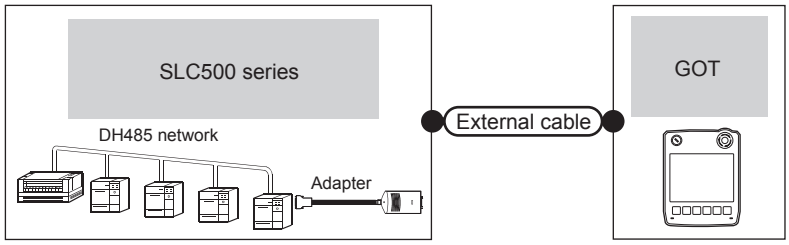

PLC			External cable	GOT model	Total distance*2	Number of connectable equipment
Series	Adapter*1	Communication type				
SLC500	1770-KF3	RS-232	GT11H-C30(3m) GT11H-C60(6m) User preparing RS232 connection diagram 6)	GT14 Handy	6m	1 GOT for 1 adapter

*1 Allen-Bradley product manufactured by Rockwell Automation, Inc. For details of this product, contact Rockwell Automation, Inc.
*2 The distance from the GOT to the adapter (External connection cable)

54.2.2 System configuration for connecting to MicroLogix1000/1200/1400/1500 Series

■ When connecting to one PLC

(1) When using the connector conversion box

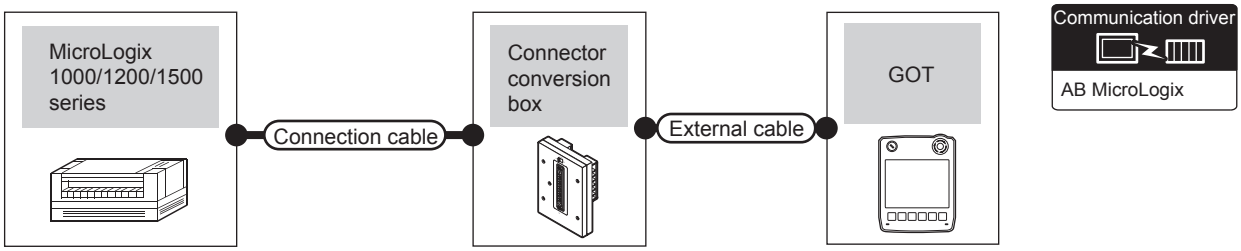

PLC		Connection cable	Connector conversion box	External cable	GOT model	Total distance	Number of connectable equipment
Series*2	Communication type	Cable model Connection diagram number					
MicroLogix 1000/1200/1400/1500	RS-232	1761-CBL-PM02*1 (Series C or later) or User preparing RS232 connection diagram 7)	GT11H-CNB-37S	GT11H-C30-37P(3m)	GT14 Handy	6m	1 GOT for 1 PLC

*1 Allen-Bradley product manufactured by Rockwell Automation, Inc. For details of this product, contact Rockwell Automation, Inc.
*2 For MicroLogix1000 (Digital CPU), it is supported in the series D and later.

(2) When using the external cable (GT11H-C□□□-37P)

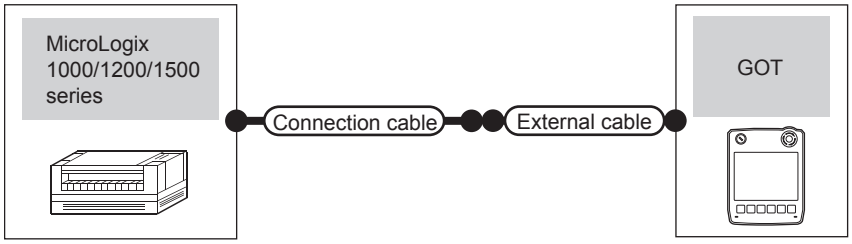

PLC		Connection cable	External cable	GOT model	Total distance	Number of connectable equipment
Series*2	Communication type	Cable model Connection diagram number				
MicroLogix 1000/1200/1400/1500	RS-232	1761-CBL-PM02*1 (Series C or later) or User preparing RS232 connection diagram 8)	GT11H-C30-37P(3m)	GT14 Handy	6m	1 GOT for 1 PLC

*1 Allen-Bradley product manufactured by Rockwell Automation, Inc. For details of this product, contact Rockwell Automation, Inc.
*2 For MicroLogix1000 (Digital CPU), it is supported in the series D and later.

(3) When using the external cable (GT11H-C□□□)

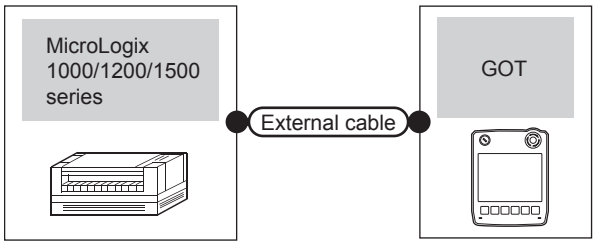

PLC		External cable	GOT model	Total distance	Number of connectable equipment
Series*2	Communication type				
MicroLogix 1000/1200/1400/1500	RS-232	GT11H-C30(3m) GT11H-C60(6m) User preparing RS232 connection diagram 9)	GT14 Handy	6m	1 GOT for 1 PLC

*1 Allen-Bradley product manufactured by Rockwell Automation, Inc. For details of this product, contact Rockwell Automation, Inc.
*2 For MicroLogix1000 (Digital CPU), it is supported in the series D and later.

■ When connecting to multiple PLCs

(1) When using the connector conversion box

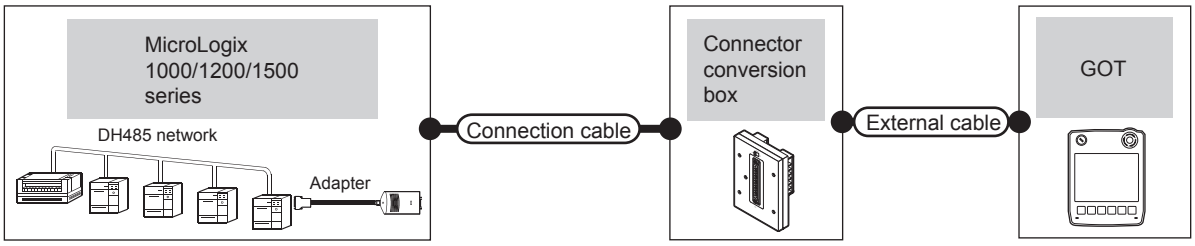

PLC			Connection cable	Connector conversion box	External cable	GOT model	Total distance *2	Number of connectable equipment
Series *3	Adapter *1	Communication type	Cable model Connection diagram number					
MicroLogix 1000/1200/1400/1500	1770-KF3	RS-232	User preparing RS232 connection diagram 4)	GT11H-CNB-37S	GT11H-C30-37P(3m)	GT14 Handy	6m	1 GOT for 1 adapter

*1 Allen-Bradley product manufactured by Rockwell Automation, Inc. For details of this product, contact Rockwell Automation, Inc.
*2 The distance from the GOT to the adapter (Connection cable + External connection cable)
*3 For MicroLogix1000 (Digital CPU), it is supported in the series C and later.

(2) When using the external cable (GT11H-C□□□-37P)

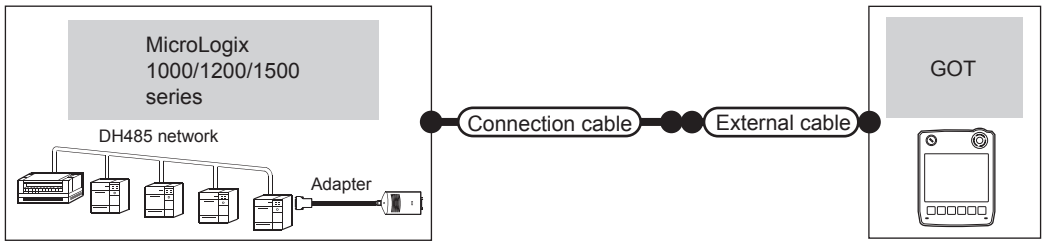

PLC			Connection cable	External cable	GOT model	Total distance *2	Number of connectable equipment
Series *3	Adapter *1	Communication type	Cable model Connection diagram number				
MicroLogix 1000/1200/1400/1500	1770-KF3	RS-232	User preparing RS232 connection diagram 5)	GT11H-C30-37P(3m)	GT14 Handy	6m	1 GOT for 1 adapter

*1 Allen-Bradley product manufactured by Rockwell Automation, Inc. For details of this product, contact Rockwell Automation, Inc.
*2 The distance from the GOT to the adapter (Connection cable + External connection cable)
*3 For MicroLogix1000 (Digital CPU), it is supported in the series C and later.

(3) When using the external cable (GT11H-C□□□)

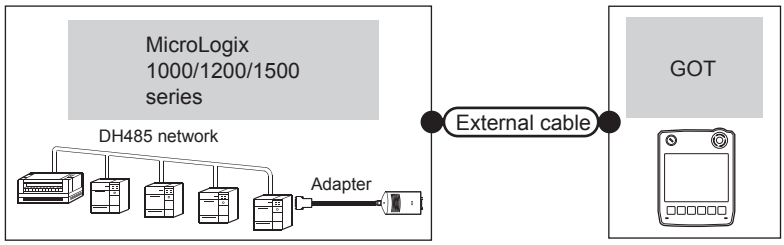

PLC			External cable	GOT model	Total distance *2	Number of connectable equipment
Series *3	Adapter *1	Communication type				
MicroLogix 1000/1200/1400/1500	1770-KF3	RS-232	GT11H-C30(3m) GT11H-C60(6m) User preparing RS232 connection diagram 6)	GT14 Handy	6m	1 GOT for 1 adapter

*1 Allen-Bradley product manufactured by Rockwell Automation, Inc. For details of this product, contact Rockwell Automation, Inc.
*2 The distance from the GOT to the adapter (External connection cable)
*3 For MicroLogix1000 (Digital CPU), it is supported in the series C and later.

54.2.3 System configuration for connecting to Control/Compact/FlexLogix Series

(1) When using the connector conversion box

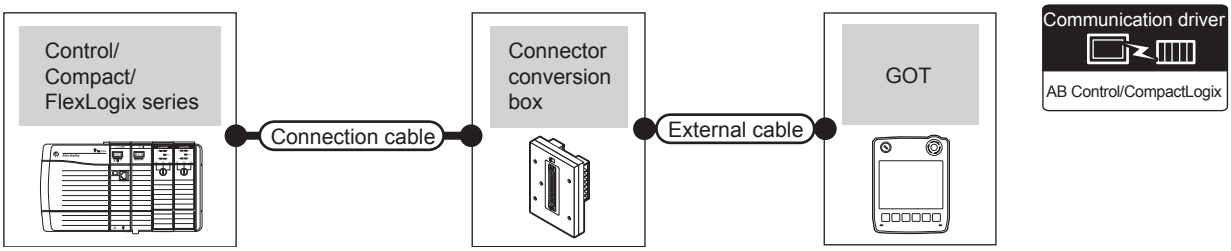

PLC		Connection cable	Connector conversion box	External cable	GOT model	Total distance	Number of connectable equipment
Series	Communication type	Cable model Connection diagram number					
Control/Compact/ FlexLogix	RS-232	1747-CP3*1 1756-CP3*1 or User preparing RS232 connection diagram 10)	GT11H-CNB-37S	GT11H-C30-37P(3m)	GT14 Handy	6m	1 GOT for 1 PLC

*1 Allen-Bradley product manufactured by Rockwell Automation, Inc. For details of this product, contact Rockwell Automation, Inc.

(2) When using the external cable (GT11H-C□□□-37P)

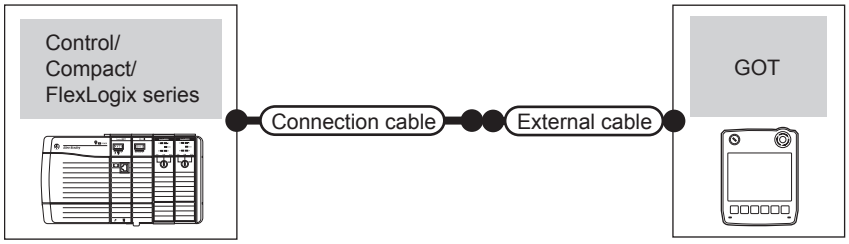

PLC		Connection cable	External cable	GOT model	Total distance	Number of connectable equipment
Series	Communication type	Cable model Connection diagram number				
Control/Compact/ FlexLogix	RS-232	1747-CP3*1 1756-CP3*1 or User preparing RS232 connection diagram 11)	GT11H-C30-37P(3m)	GT14 Handy	6m	1 GOT for 1 PLC

*1 Allen-Bradley product manufactured by Rockwell Automation, Inc. For details of this product, contact Rockwell Automation, Inc.

(3) When using the external cable (GT11H-C□□□)

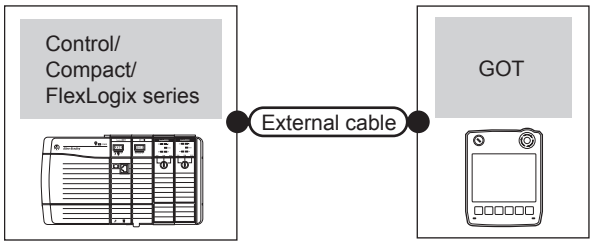

PLC		External cable	GOT model	Total distance	Number of connectable equipment
Series	Communication type				
Control/Compact/ FlexLogix	RS-232	GT11H-C30(3m) GT11H-C60(6m) User preparing RS232 connection diagram 12)	GT14 Handy	6m	1 GOT for 1 PLC

54.2.4 Connection diagram

The following diagram shows the connection between the GOT and the PLC.

■ RS-232 cable

(1) Connection diagram

RS232 connection diagram 1)

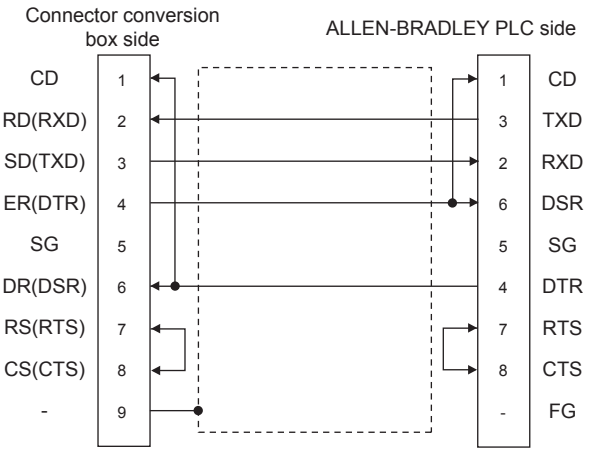

RS232 connection diagram 2)

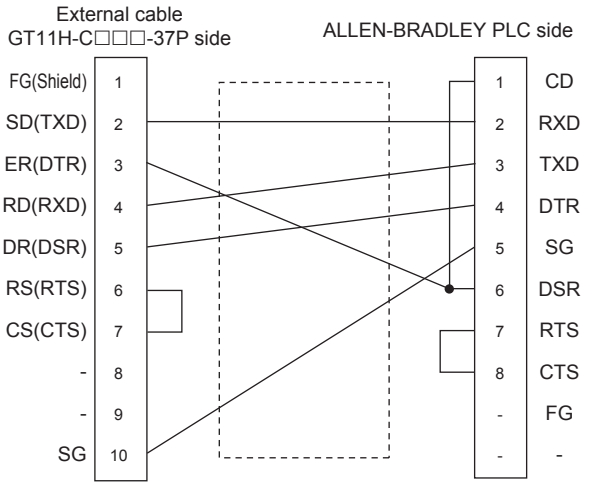

RS232 connection diagram 3)

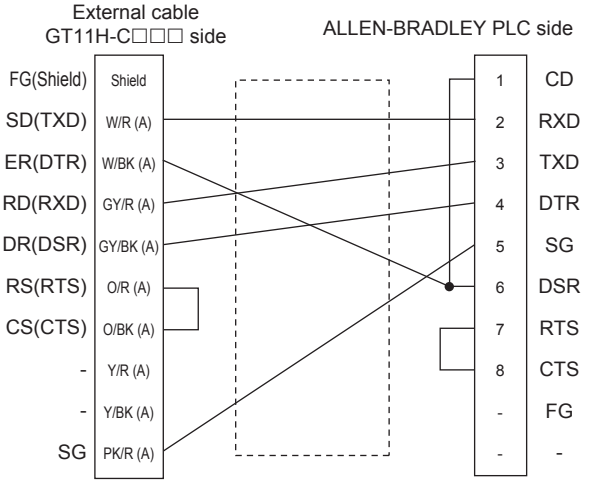

RS232 connection diagram 4)

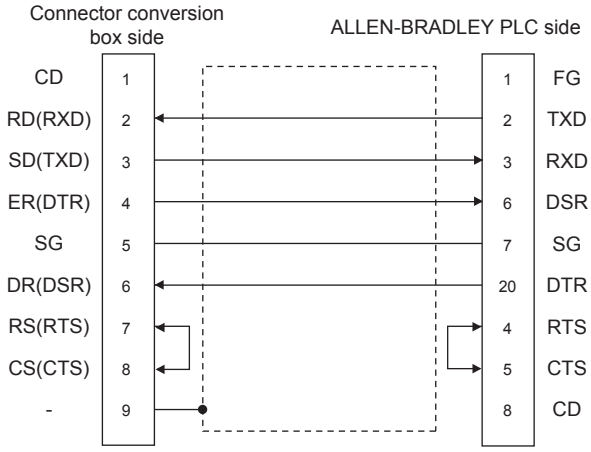

RS232 connection diagram 5)

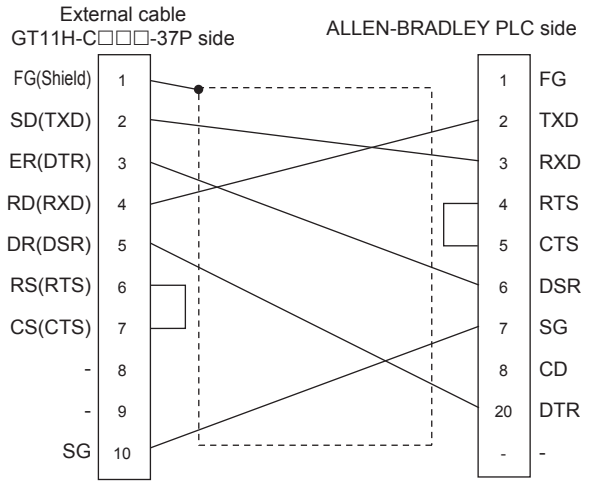

RS232 connection diagram 6)

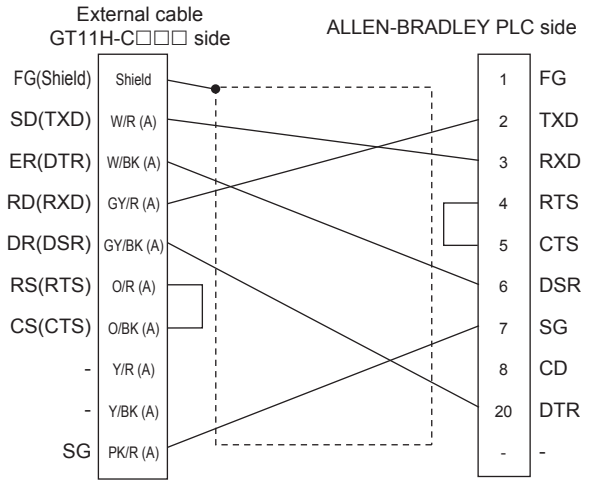

RS232 connection diagram 7)

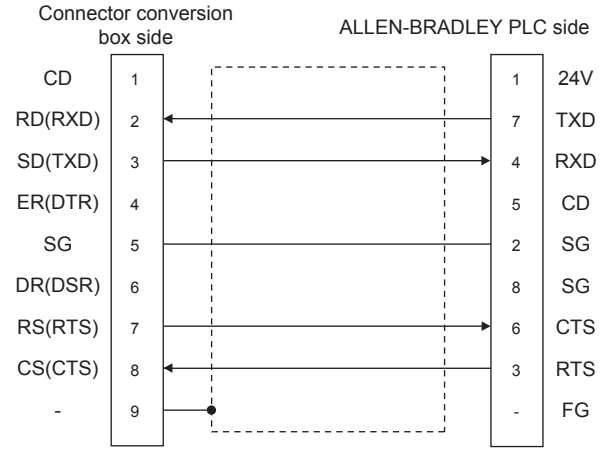

RS232 connection diagram 8)

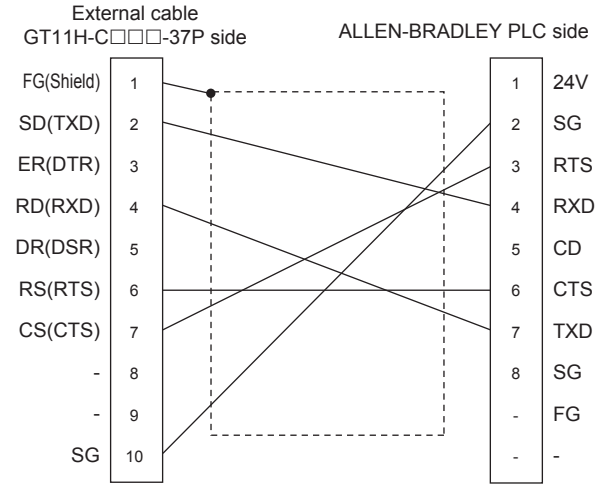

RS232 connection diagram 9)

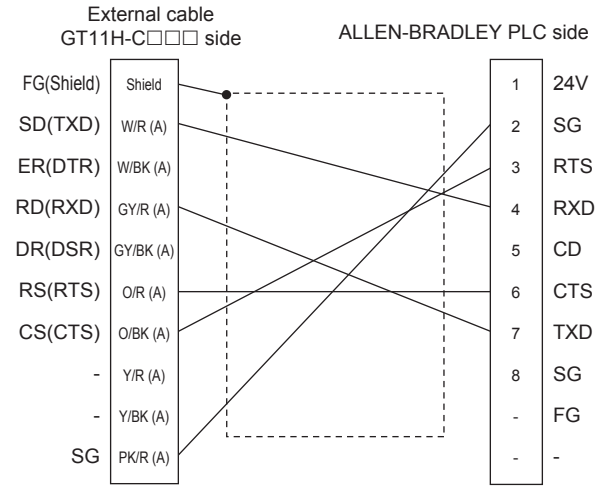

RS232 connection diagram 10)

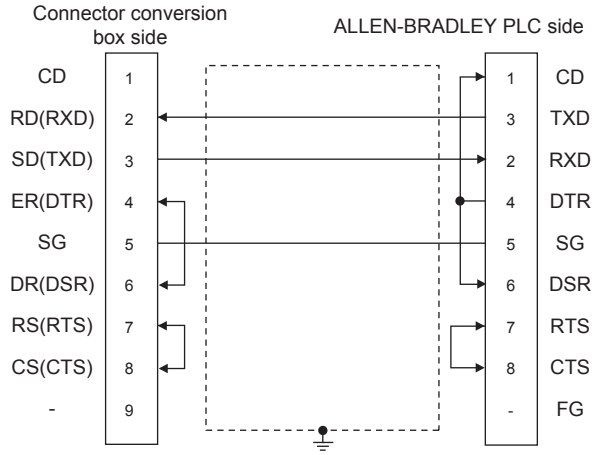

RS232 connection diagram 11)

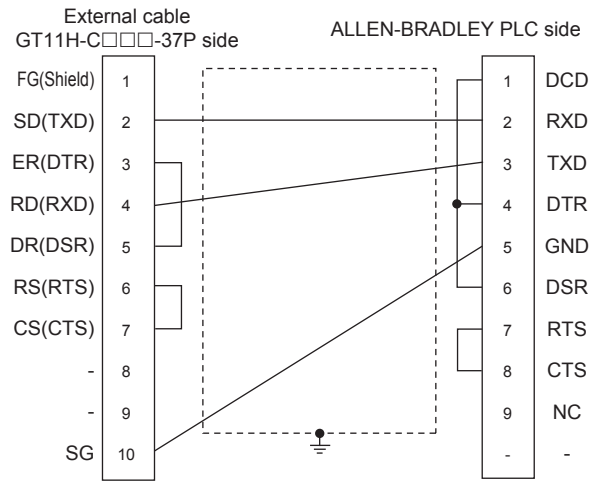

RS232 connection diagram 12)

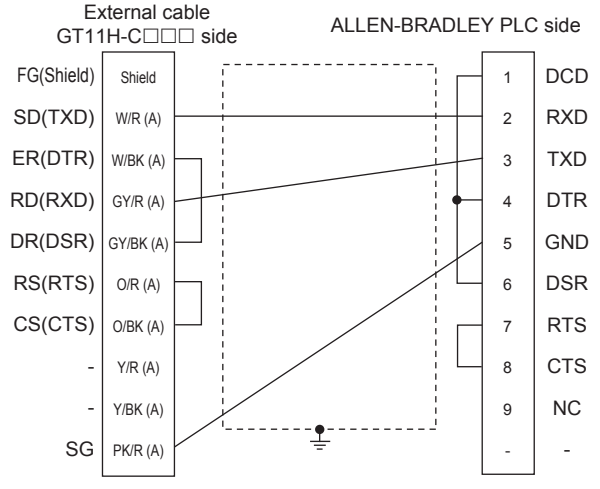

(2) Precautions when preparing a cable

(a) Cable length
The total distance (between the GOT and a controller) of RS-232 cable must be 6m or less.

(b) Connector conversion box side connector
For the connector conversion box side connector, refer to the following.

☞ 6.6 Connector Conversion Box

(c) External cable side connector
For the connector specifications of the external cable side, refer to the following.

☞ 8.2 External Cable, Relay Cable

(d) ALLEN-BRADLEY PLC side connector
Use the connector compatible with the ALLEN-BRADLEY PLC side module.
For details, refer to the ALLEN-BRADLEY PLC user's manual.

54.2.5 GOT side settings

■ Setting communication interface (Communication settings)

Set the channel of the connected equipment.

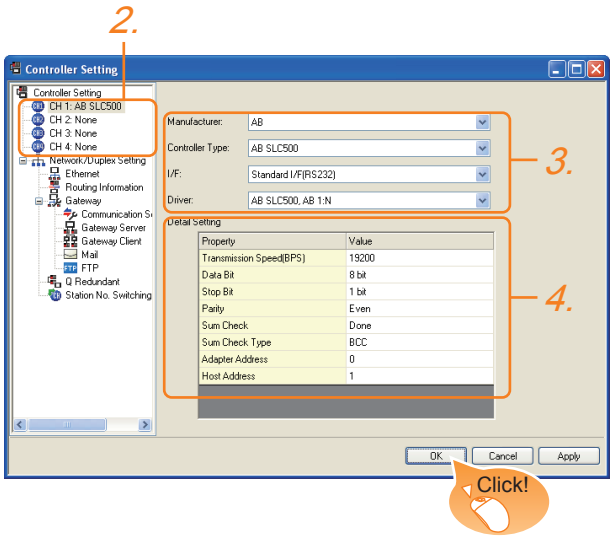

1. Select [Common] → [Controller Setting] from the menu.

2. The Controller Setting window is displayed. Select the channel to be used from the list menu.

3. Set the following items.
   - Manufacturer: AB
   - Controller Type: Set either of the followings.
     - SLC500
     - MicroLogix1000/1200/1400/1500 series
     - Control/CompactLogix
   - I/F: Interface to be used
   - Driver: Set either of the followings.
     - When connecting to SLC500 Series: AB SLC500, AB 1:N
     - When connecting to MicroLogix1000/1200/1400/1500 Series: AB MicroLogix
     - When connecting to Control/Compact/FlexLogix Series: AB Control/CompactLogix

4. The detailed setting is displayed after Manufacturer, Controller Type, I/F, and Driver are set.
   Make the settings according to the usage environment.
   54.2.5 ■ Communication detail settings

Click the OK button when settings are completed.

POINT

The settings of connecting equipment can be confirmed in [I/F Communication Setting].
For details, refer to the following.
18.1.2 I/F communication setting

■ Communication detail settings

(1) AB SLC500, AB 1: N

Item	Description	Range
Transmission Speed	Set this item when change the transmission speed used for communication with the connected equipment. (Default: 19200bps)	4800bps, 9600bps, 19200bps
Adapter Address*1	Specify the adapter address (station No. of the PLC that the GOT will monitor) in the connected network. (Default: 0)	0 to 31
Host Address*1	Specify the host address (station No. of the adapter to which the GOT is connected) in the connected network. (Default: 1)	1 to 31

*1 Do not specify the same value for the adapter address and host address.

(2) AB MicroLogix

Item	Description	Range
Transmission Speed	Set this item when change the transmission speed used for communication with the connected equipment. (Default: 19200bps)	4800bps, 9600bps, 19200bps, 38400bps
Sum Check Type	Specify the format in which the sum check is performed during communication when performing sum check. (Default: BCC)	BCC, CRC16
Adapter Address*1	Specify the adapter address (station No. of the PLC that the GOT will monitor) in the connected network. (Default: 0)	0 to 63
Host Address*1	Specify the host address (station No. of the adapter to which the GOT is connected) in the connected network. (Default: 1)	1 to 63

*1 Do not specify the same value for the adapter address and host address.

(3) AB Control/CompactLogix

Item	Description	Range
Transmission Speed	Set this item when change the transmission speed used for communication with the connected equipment. (Default: 19200bps)	9600bps, 19200bps, 38400bps, 57600bps 115200bps
Data Bit	Set this item when change the data length used for communication with the connected equipment. (Default: 8bit)	7bit/8bit
Stop Bit	Specify the stop bit length for communications. (Default: 1bit)	1bit/2bits
Parity	Specify whether or not to perform a parity check, and how it is performed during communication. (Default: None)	None Even Odd
Sum Check Type	Specify the format in which the sum check is performed during communication when performing sum check. (Default: BCC)	BCC, CRC16
Retry	Set the number of retries to be performed when a communication error occurs. (Default: 3times)	0 to 5times
Timeout Time	Set the time period for a communication to time out. (Default: 3sec)	3 to 30sec
Adapter Address	Specify the adapter address (station No. of the PLC that the GOT will monitor) in the connected network. (Default: 0)	0 to 254
Host Address	Specify the host address (station No. of the adapter to which the GOT is connected) in the connected network. (Default: 0)	0 to 254
Delay Time	Set this item to adjust the transmission timing of the communication request from the GOT. (Default: 0ms)	0 to 300ms

(4) AB SLC500

Item	Description	Range
Transmission Speed	Set this item when change the transmission speed used for communication with the connected equipment. (Default: 19200bps)	4800bps, 9600bps, 19200bps
Adapter Address*1	Specify the adapter address (station No. of the PLC that the GOT will monitor) in the connected network. (Default: 0)	0 to 31
Host Address*1	Specify the host address (station No. of the adapter to which the GOT is connected) in the connected network. (Default: 1)	1 to 31

*1 Do not specify the same value for the adapter address and host address.

POINT

(1) Communication interface setting by Utility
The communication interface setting can be changed on the Utility's [Communication setting] after writing [Communication Settings] of project data.
For details on the Utility, refer to the following manual.

11. COMMUNICATION INTERFACE SETTING (COMMUNICATION SETTING)

(2) Precedence in communication settings
When settings are made by GT Designer3 or the Utility, the latest setting is effective.

54.2.6 PLC side setting

POINT

ALLEN-BRADLEY PLC
For details of ALLEN-BRADLEY PLCs, refer to the following manuals.

Manuals for ALLEN-BRADLEY PLCs

■ Directly connecting to the CPU

Item	Settings		
	SLC500 Series	MicroLogix 1000/1200/ 1500 Series	Control/ Compact/ FlexLogix Series
Baud Rate*1	4800bps, 9600bps, 19200bps	4800bps, 9600bps, 19200bps, 38400bps	4800bps, 9600bps, 19200bps, 38400bps
Parity	EVEN	NONE	NONE
Control Line	NO HANDSHAKING		
Communication Driver	DF1 HALF-DUPLEX SLAVE		
Duplicate Packet Detection	DISABLE		
Station Address	0		
Error Detection	BCC	BCC, CRC*2	BCC, CRC*2

*1 Set the Baud Rate according to the transmission speed setting on the GOT side.
*2 Set the Error Detection according to the sum check format setting on the GOT side.

■ Connecting to DH485 network via adapter (1770-KF3) (Setting of Adapter)

Item	Settings
Baud Rate*1	4800bps, 9600bps, 19200bps
Parity	Even
Flow Control	Disable (No Handshaking)
DF1 Device Category	DF1 half-duplex slave, local mode
Error Detection*2	BCC
DH-485 Baud Rate	19200bps
Maximum Node Address	1 to 31*3
DH-485 Node Address	0 to 31*4

*1 Set the Baud Rate according to the transmission speed setting on the GOT side.
*2 Set the Error Detection according to the sum check format setting on the GOT side.
*3 For the Maximum Node Address, set the same address as the Maximum Node Address on the DH-485 network.
*4 Set the DH-485 Node Address according to the Host Address on the GOT side.
Set a unique DH-485 Node Address so that it does not conflict with the Node Address of the PLC CPU on the DH-485 network.

54.3 Ethernet Connection

54.3.1 System configuration for connecting to ControlLogix or CompactLogix

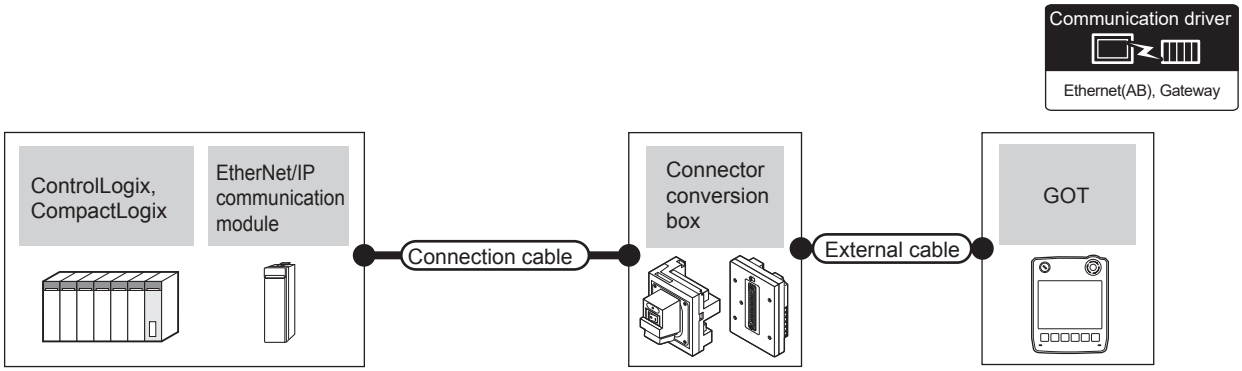

PLC			Connection cable*2	Connector conversion box	External cable*6	GOT model	Maximum segment length*3	Number of connectable equipment
Series	EtherNet/IP communication module*1	Communication type	Cable model					
ControlLogix	1756-ENET*4 (10Mbps) 1756-ENBT*4 (10/100Mbps) 1756-EN2TR*4 (10/100Mbps)	Ethernet	• 10BASE-T Shielded twisted pair cable (STP) or Unshielded twisted pair cable (UTP) Category 3, 4, and 5 • 100BASE-TX Shielded twisted pair cable (STP) Category 5 and 5e	GT16H-CNB-42S	GT14H-C30-42P (3m) GT14H-C60-42P (6m) GT14H-C100-42P (10m)	GT14 Handy	100m	*5
				GT16H-CNB-37S	GT11H-C30-37P (3m) GT11H-C60-37P (6m) GT11H-C100-37P (10m)			
CompactLogix	-			GT16H-CNB-42S	GT14H-C30-42P (3m) GT14H-C60-42P (6m) GT14H-C100-42P (10m)	GT14 Handy	100m	When PLC:GOT is N:1 The following shows the number of PLCs for 1 GOT TCP: 128 or less When PLC:GOT is 1:N The following shows the number of GOTs for 1 PLC TCP: 32 or less (recommended to 16 units or less)
				GT16H-CNB-37S	GT11H-C30-37P (3m) GT11H-C60-37P (6m) GT11H-C100-37P (10m)			

*1 Allen-Bradley product manufactured by Rockwell Automation, Inc. For details of this product, contact Rockwell Automation, Inc.

*2 The destination connected with the twisted pair cable varies with the configuration of the applicable Ethernet network system.
Connect to the Ethernet module, hub, transceiver or other system equipment corresponding to the applicable Ethernet network system.
Use cables, connectors, and hubs that meet the IEEE802.3 10BASE-T/100BASE-TX standard.
The use of shielded twisted pair cable (STP) is recommended in environments in which the performance against noise is required.

*3 A length between a hub and a node.
The maximum distance differs depending on the Ethernet device to be used.
The following shows the number of the connectable nodes when a repeater hub is used.
- 10BASE-T: Max. 4 nodes for a cascade connection (500m)
- 100BASE-TX: Max. 2 nodes for a cascade connection (205m)

When switching hubs are used, the cascade connection between the switching hubs has no logical limit for the number of cascades.
For the limit, contact the switching hub manufacturer.

*4 The connectable EtherNet/IP communication module differs depending on the PLC series.
(ControlLogix5550/5555/5560)
1756-ENET(10Mbps), 1756-ENBT(10/100Mbps)
(ControlLogix5570)
1756-EN2TR(10/100Mbps)

(Continued to next page)

*5 The number of the connectable GOTs for 1 PLC differs depending on the PLC series.
(ControlLogix5550/5555/5560)
- When PLC:GOT is N:1, the following number of the PLCs can be connected to 1 GOT.
  TCP: 128 or less
- When PLC:GOT is 1:N, the following number of the GOTs can be connected to 1 PLC.
  TCP: 64 or less (recommended to 16 or less)

(ControlLogix5570)
- When PLC:GOT is N:1, the following number of the PLCs can be connected to 1 GOT.
  TCP: 128 or less
- When PLC:GOT is 1:N, the following number of the GOTs can be connected to 1 PLC.
  TCP: 128 or less (recommended to 16 or less)

*6 Use C or later version of GT11H-C□□-37P.

54.3.2 GOT Side Settings

■ Setting communication interface (Communication settings)

Set the channel of the connected equipment.

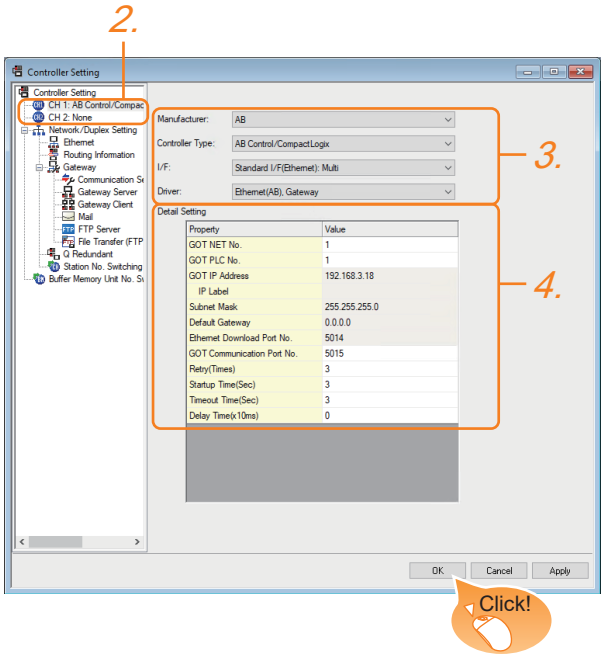

1. Select [Common] → [Controller Setting] from the menu.
2. The Controller Setting window is displayed. Select the channel to be used from the list menu.
3. Set the following items.
   - Manufacturer: AB
   - Controller Type: Control/CompactLogix
   - I/F: Interface to be used
   - Driver: Ethernet(AB), Gateway
4. The detailed setting is displayed after Manufacturer, Controller Type, I/F, and Driver are set.
   Make the settings according to the usage environment.

   54.3.2 ■ Communication detail settings

Click the OK button when settings are completed.

POINT

The settings of connecting equipment can be confirmed in [I/F Communication Setting].
For details, refer to the following.

18.1.2 I/F communication setting

■ Communication detail settings

Make the settings according to the usage environment.

Item	Description	Range
GOT NET No.	Set the network No. of the GOT. (Default: 1)	1 to 239
GOT PLC No.*2	Set the station No. of the GOT. (Default: 1)	1 to 64
GOT IP Address*1	Set the IP address of the GOT. (Default: 192.168.3.18)	0.0.0.0 to 255.255.255.255
Subnet Mask*1	Set the subnet mask for the sub network. (Only for connection via router) If the sub network is not used, the default value is set. (Default: 255.255.255.0)	0.0.0.0 to 255.255.255.255
Default Gateway*1	Set the router address of the default gateway where the GOT is connected. (Only for connection via router) (Default: 0.0.0.0)	0.0.0.0 to 255.255.255.255
Ethernet Download Port No.*1	Set the GOT port No. for Ethernet download. (Default: 5014)	1024 to 5010, 5014 to 65534 (Except for 5011, 5012, 5013, 44818 and 49153)
GOT Communication Port No.	Set the GOT port No. for the connection with the Ethernet module. (Default: 5015)	1024 to 5010, 5014 to 65534 (Except for 5011, 5012, 5013, 44818 and 49153)
Retry	Set the number of retries to be performed when a communication timeout occurs. When receiving no response after retries, the communication times out. (Default: 3times)	0 to 5times
Startup Time	Specify the time period from the GOT startup until GOT starts the communication with the PLC CPU. (Default: 3sec)	3 to 255sec
Timeout Time	Set the time period for a communication to time out. (Default: 3sec)	3 to 90sec
Delay Time	Set the delay time for reducing the load of the network/destination PLC. (Default: 0ms)	0 to 10000 (× 10 ms)

*1 Click the Setting button and perform the setting in the [GOT IP Address Setting] screen.

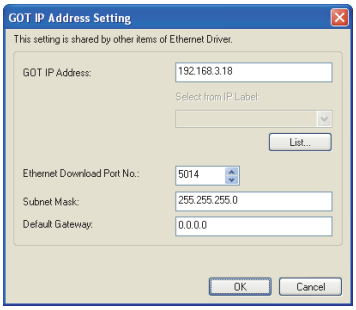

*2 Each of [GOT PLC No.] set in the communication detail setting and [PLC No.] set in the Ethernet setting must be set to different station numbers.

54.3.2 ■ Ethernet setting

■ Ethernet setting

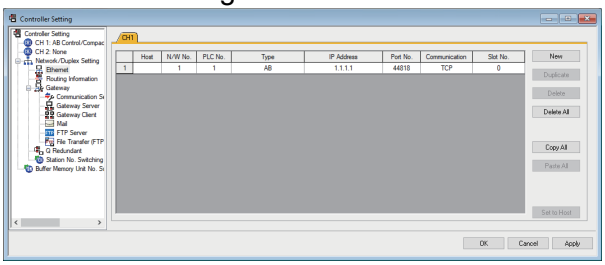

Item	Description	Set value
Host	The host is displayed. (The host is indicated with an asterisk (*).)	-
N/W No.	Set the network No. of the connected Ethernet module. (Default: blank)	1 to 239
PLC No.*1	Set the station No. of the connected Ethernet module. (Default: blank)	1 to 64
Controller Type	AB (fixed)	AB (fixed)
IP address	Set the IP address of the connected Ethernet module. (Default: blank)	PLC side IP address
Port No.	44818 (fixed)	44818 (fixed)
Communication	TCP (fixed)	TCP (fixed)
Slot No.	Set the slot No. of the PLC to which the Ethernet module is connected. (Default: blank)	0 to 16

*1 Each of [GOT PLC No.] set in the communication detail setting and [PLC No.] set in the Ethernet setting must be set to different station numbers.

54.3.2 ■ Communication detail settings

POINT

(1) Communication interface setting by Utility
The communication interface setting can be changed on the Utility's [Communication setting] after writing [Communication Settings] of project data.
For details on the Utility, refer to the following manual.

11. COMMUNICATION INTERFACE SETTING (COMMUNICATION SETTING)

(2) Precedence in communication settings
When settings are made by GT Designer3 or the Utility, the latest setting is effective.

(3) Setting IP address and port No
The same IP address cannot be set for the same port No. The same IP address can be set for the different port No.

54.3.3 PLC side setting

POINT

ALLEN-BRADLEY PLC
For details of ALLEN-BRADLEY PLCs, refer to the following manuals.

Manuals for ALLEN-BRADLEY PLCs

■ Parameter setting

Set the following parameters with the software package manufactured by the Allen-Bradley.

Item	Settings
Name	Sets the name.
IP Address	IP address of the connected module*1
Slot	Slots No. for installing the EtherNet/IP communication module

*1 For the IP address, make the same setting as that of each Ethernet module set on GT Designer3.
Do not set the same IP Address as those of GOT and controller on the Ethernet network.
For the address setting on GT Designer3, refer to the following.

54.3.2 ■ Communication detail settings

54.3.4 Precautions

■ When setting IP address

Do not use "0" and "255" at the end of an IP address. (Numbers of *.*.*.0 and *.*.*.255 are used by the system)
The GOT may not monitor the controller correctly with the above numbers.
Consult with the administrator of the network before setting an IP address to the GOT and controller.

■ When connecting to multiple GOTs

(1) Setting PLC No.
When connecting two or more GOTs in the Ethernet network, set each [PLC No.] to the GOT.

☞ 54.3.2 ■ Ethernet setting

(2) Setting IP address
Do not use the IP address "192.168.0.18" when using multiple GOTs.
A communication error may occur on the GOT with the IP address.

■ When connecting to the multiple network equipment (including GOT) in a segment

By increasing the network load, the transmission speed between the GOT and PLC may be reduced.
The following actions may improve the communication performance.

- Using a switching hub
- More high speed by 100BASE-TX (100Mbps)
  Reduction of the monitoring points on GOT

54.4 Device Range that Can Be Set

For details on the device range of controllers that can be used on GT14 Handy, refer to the following manuals.

☞ GT Designer3 Version1 Screen Design Manual (Fundamentals)

☞ GOT1000 Series Connection Manual (Non-Mitsubishi Products 2) for GT Works3

55. CONNECTION TO GE PLC

55.1 Connectable Model List

The following table shows the connectable models.

Series	Model	Clock	Communication type	GT14 Handy	Refer to
Series90-30	IC693CPU311	×	RS-232 RS-422	○	55.2.1
	IC693CPU313				
	IC693CPU323				
	IC693CPU350				
	IC693CPU360				
	IC693CPU363				
	IC693CPU366				
	IC693CPU367				
	IC693CPU374				
Series90-70	IC697CPU731	×	RS-232 RS-422	○	55.2.2
	IC697CPX772				
	IC697CPX782				
	IC697CPX928				
	IC697CPX935				
	IC697CPU780				
	IC697CGR772				
	IC697CGR935				
	IC697CPU788				
	IC697CPU789				
	IC697CPM790				
VersaMax Micro	IC200UAA003	×	RS-232 RS-422	○	55.2.3
	IC200UAL004				
	IC200UAL005				
	IC200UAL006				
	IC200UAA007				
	IC200UAR028				
	IC200UDD110				
	IC200UDD120				
	IC200UDD212				
	IC200UDR005				
	IC200UDR006				
	IC200UDR010				
	IC200UDD064				
	IC200UDD164				
	IC200UDR164				
	IC200UDR064				
	IC200UAR014				
	IC200UDD104				
	IC200UDD112				
	IC200UDR001				
	IC200UDR002				
	IC200UDR003				

55.2 System Configuration

55.2.1 Connecting to Series90-30

■ When using the connector conversion box

POINT

Connectable model

Only the models that are compatible with SNP-X protocol can be connected.

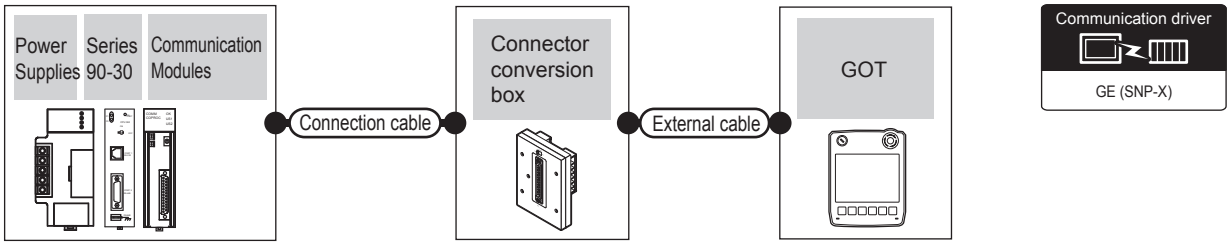

(1) For the RS-232 connection

PLC				Connection cable	Connector conversion box	External cable	GOT model	Total distance	Number of connectable equipment
Power Supplies*1	Model	Communication Modules*1	Communication type	Cable model Connection diagram number					
IC693PWR321 IC693PWR330 IC693PWR331 IC693PWR332 IC693PWR328	IC693CPU311 IC693CPU313 IC693CPU323	IC693CMM311	RS-232	User programming RS232 connection diagram 1)	GT11H-CNB-37S	GT11H-C30-37P (3m)	GT14 Handy	6m	1 PLC for 1 GOT
IC693PWR321 IC693PWR330 IC693PWR331 IC693PWR332 IC693PWR328	IC693CPU350 IC693CPU360 IC693CPU366 IC693CPU367 IC693CPU374	IC693CMM311							
IC693PWR321 IC693PWR330 IC693PWR331 IC693PWR332 IC693PWR328	IC693CPU363	IC693CMM311							

*1 Product manufactured by GE Automation Corporation. For details of the product, contact GE Automation Corporation.

(2) For the RS-422 connection (connecting to the Communication Modules)

PLC				Connection cable	Connector conversion box	External cable	GOT model	Total distance	Number of connectable equipment
Power Supplies*1	Model	Communication Modules*1	Communication type	Cable model Connection diagram number					
IC693PWR321 IC693PWR330 IC693PWR331 IC693PWR332 IC693PWR328	IC693CPU311 IC693CPU313 IC693CPU323	IC693CMM311	RS-422	User preparing RS422 connection diagram 1)	GT11H-CNB-37S	GT11H-C30-37P(3m) GT11H-C60-37P(6m) GT11H-C100-37P(10m)	GT14 Handy	13m	8 PLCs for 1 GOT
IC693PWR321 IC693PWR330 IC693PWR331 IC693PWR332 IC693PWR328	IC693CPU350 IC693CPU360 IC693CPU366 IC693CPU367 IC693CPU374	IC693CMM311	RS-422						
IC693PWR321 IC693PWR330 IC693PWR331 IC693PWR332 IC693PWR328	IC693CPU363	IC693CMM311	RS-422						

*1 Product manufactured by GE Automation Corporation. For details of the product, contact GE Automation Corporation.

(3) For the RS-422 connection (connecting to the Power Supplies)

PLC			Connection cable	Connector conversion box	External cable	GOT model	Total distance	Number of connectable equipment
Power Supplies*1	Model	Communication type	Cable model Connection diagram number					
IC693PWR321 IC693PWR330 IC693PWR331 IC693PWR332 IC693PWR328	IC693CPU350 IC693CPU360 IC693CPU366 IC693CPU367 IC693CPU374	RS-422	User preparing RS422 connection diagram 4)	GT11H-CNB-37S	GT11H-C30-37P(3m) GT11H-C60-37P(6m) GT11H-C100-37P(10m)	GT14 Handy	13m	8 PLCs for 1 GOT
IC693PWR321 IC693PWR330 IC693PWR331 IC693PWR332 IC693PWR328	IC693CPU363	RS-422						

*1 Product manufactured by GE Automation Corporation. For details of the product, contact GE Automation Corporation.

(4) For the RS-422 connection (connecting to the PLC)

PLC			Connection cable	Connector conversion box	External cable	GOT model	Total distance	Number of connectable equipment
Power Supplies*1	Model	Communication type	Cable model Connection diagram number					
IC693PWR321 IC693PWR330 IC693PWR331 IC693PWR332 IC693PWR328	IC693CPU363 (CPU port 2)	RS-422	User preparing RS422 connection diagram 4)	GT11H-CNB-37S	GT11H-C30-37P(3m) GT11H-C60-37P(6m) GT11H-C100-37P(10m)	GT14 Handy	13m	8 PLCs for 1 GOT

*1 Product manufactured by GE Automation Corporation. For details of the product, contact GE Automation Corporation.

■ When using the external cable (GT11H-C□□□-37P)

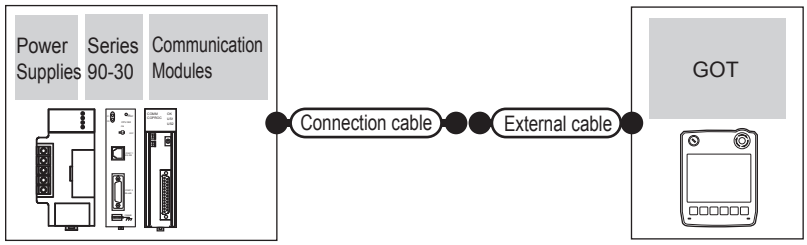

(1) For the RS-232 connection

PLC				Connection cable	External cable	GOT model	Total distance	Number of connectable equipment
Power Supplies*1	Model	Communication Modules*1	Communication type	Cable model Connection diagram number				
IC693PWR321 IC693PWR330 IC693PWR331 IC693PWR332 IC693PWR328	IC693CPU311 IC693CPU313 IC693CPU323	IC693CMM311	RS-232	User preparing RS232 connection diagram 2)	GT11H-C30-37P (3m)	GT14 Handy	6m	1 PLC for 1 GOT
IC693PWR321 IC693PWR330 IC693PWR331 IC693PWR332 IC693PWR328	IC693CPU350 IC693CPU360 IC693CPU366 IC693CPU367 IC693CPU374	IC693CMM311						
IC693PWR321 IC693PWR330 IC693PWR331 IC693PWR332 IC693PWR328	IC693CPU363	IC693CMM311						

*1 Product manufactured by GE Automation Corporation. For details of the product, contact GE Automation Corporation.

(2) For the RS-422 connection (connecting to the Communication Modules)

PLC				Connection cable	External cable	GOT model	Total distance	Number of connectable equipment
Power Supplies*1	Model	Communication Modules*1	Communication type	Cable model Connection diagram number				
IC693PWR321 IC693PWR330 IC693PWR331 IC693PWR332 IC693PWR328	IC693CPU311 IC693CPU313 IC693CPU323	IC693CMM311	RS-422	User preparing RS422 connection diagram 2)	GT11H-C30-37P(3m) GT11H-C60-37P(6m) GT11H-C100-37P(10m)	GT14 Handy	13m	8 PLCs for 1 GOT
IC693PWR321 IC693PWR330 IC693PWR331 IC693PWR332 IC693PWR328	IC693CPU350 IC693CPU360 IC693CPU366 IC693CPU367 IC693CPU374	IC693CMM311	RS-422					
IC693PWR321 IC693PWR330 IC693PWR331 IC693PWR332 IC693PWR328	IC693CPU363	IC693CMM311	RS-422					

*1 Product manufactured by GE Automation Corporation. For details of the product, contact GE Automation Corporation.

(3) For the RS-422 connection (connecting to the Power Supplies)

PLC			Connection cable	External cable	GOT model	Total distance	Number of connectable equipment
Power Supplies*1	Model	Communication type	Cable model Connection diagram number				
IC693PWR321 IC693PWR330 IC693PWR331 IC693PWR332 IC693PWR328	IC693CPU350 IC693CPU360 IC693CPU366 IC693CPU367 IC693CPU374	RS-422	User preparing RS422 connection diagram 5)	GT11H-C30-37P(3m) GT11H-C60-37P(6m) GT11H-C100-37P(10m)	GT14 Handy	13m	8 PLCs for 1 GOT
IC693PWR321 IC693PWR330 IC693PWR331 IC693PWR332 IC693PWR328	IC693CPU363	RS-422					

*1 Product manufactured by GE Automation Corporation. For details of the product, contact GE Automation Corporation.

(4) For the RS-422 connection (connecting to the PLC)

PLC			Connection cable	External cable	GOT model	Total distance	Number of connectable equipment
Power Supplies*1	Model	Communication type	Cable model Connection diagram number				
IC693PWR321 IC693PWR330 IC693PWR331 IC693PWR332 IC693PWR328	IC693CPU363 (CPU port 2)	RS-422	User preparing RS422 connection diagram 5)	GT11H-C30-37P(3m) GT11H-C60-37P(6m) GT11H-C100-37P(10m)	GT14 Handy	13m	8 PLCs for 1 GOT

*1 Product manufactured by GE Automation Corporation. For details of the product, contact GE Automation Corporation.

■ When using the external cable (GT11H-C□□□)

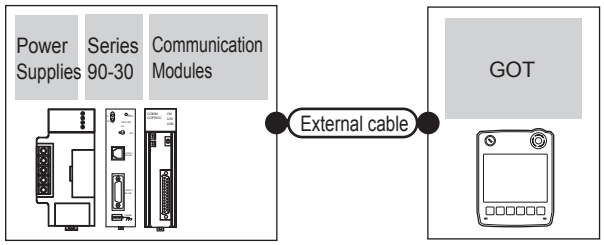

(1) For the RS-232 connection

PLC				External cable	GOT model	Total distance	Number of connectable equipment
Power Supplies*1	Model	Communication Modules*1	Communication type				
IC693PWR321 IC693PWR330 IC693PWR331 IC693PWR332 IC693PWR328	IC693CPU311 IC693CPU313 IC693CPU323	IC693CMM311	RS-232	GT11H-C30(3m) GT11H-C60(6m) User preparing RS232 connection diagram 3)	GT14 Handy	6m	1 PLC for 1 GOT
IC693PWR321 IC693PWR330 IC693PWR331 IC693PWR332 IC693PWR328	IC693CPU350 IC693CPU360 IC693CPU366 IC693CPU367 IC693CPU374	IC693CMM311					
IC693PWR321 IC693PWR330 IC693PWR331 IC693PWR332 IC693PWR328	IC693CPU363	IC693CMM311					

*1 Product manufactured by GE Automation Corporation. For details of the product, contact GE Automation Corporation.

(2) For the RS-422 connection (connecting to the Communication Modules)

PLC				External cable	GOT model	Total distance	Number of connectable equipment
Power Supplies*1	Model	Communication Modules*1	Communication type				
IC693PWR321 IC693PWR330 IC693PWR331 IC693PWR332 IC693PWR328	IC693CPU311 IC693CPU313 IC693CPU323	IC693CMM311	RS-422	GT11H-C30(3m) GT11H-C60(6m) GT11H-C100(10m) User preparing RS422 connection diagram 3)	GT14 Handy	13m	8 PLCs for 1 GOT
IC693PWR321 IC693PWR330 IC693PWR331 IC693PWR332 IC693PWR328	IC693CPU350 IC693CPU360 IC693CPU366 IC693CPU367 IC693CPU374	IC693CMM311	RS-422				
IC693PWR321 IC693PWR330 IC693PWR331 IC693PWR332 IC693PWR328	IC693CPU363	IC693CMM311	RS-422				

*1 Product manufactured by GE Automation Corporation. For details of the product, contact GE Automation Corporation.

(3) For the RS-422 connection (connecting to the Power Supplies)

PLC			External cable	GOT model	Total distance	Number of connectable equipment
Power Supplies*1	Model	Communication type				
IC693PWR321 IC693PWR330 IC693PWR331 IC693PWR332 IC693PWR328	IC693CPU350 IC693CPU360 IC693CPU366 IC693CPU367 IC693CPU374	RS-422	GT11H-C30(3m) GT11H-C60(6m) GT11H-C100(10m) User preparing RS422 connection diagram 6)	GT14 Handy	13m	8 PLCs for 1 GOT
IC693PWR321 IC693PWR330 IC693PWR331 IC693PWR332 IC693PWR328	IC693CPU363	RS-422				

*1 Product manufactured by GE Automation Corporation. For details of the product, contact GE Automation Corporation.

(4) For the RS-422 connection (connecting to the PLC)

PLC			External cable	GOT model	Total distance	Number of connectable equipment
Power Supplies*1	Model	Communication type				
IC693PWR321 IC693PWR330 IC693PWR331 IC693PWR332 IC693PWR328	IC693CPU363 (CPU port 2)	RS-422	GT11H-C30(3m) GT11H-C60(6m) GT11H-C100(10m) User preparing RS422 connection diagram 6)	GT14 Handy	13m	8 PLCs for 1 GOT

*1 Product manufactured by GE Automation Corporation. For details of the product, contact GE Automation Corporation.

55.2.2 Connecting to Series90-70

POINT

Only the models that are compatible with SNP-X protocol can be connected.

■ For the RS-232 connection

(1) When using the connector conversion box

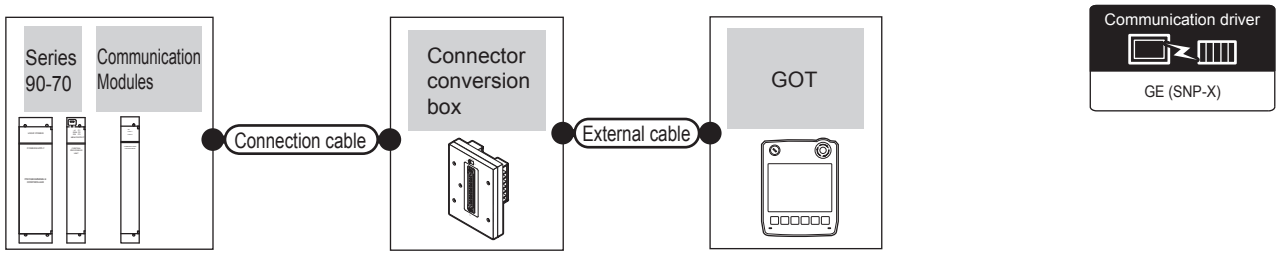

PLC			Connection cable	Connector conversion box	External cable	GOT model	Total distance	Number of connectable equipment
Model	Communication Modules*1	Communication type	Cable model Connection diagram number					
IC697CPX772 IC697CPX782 IC697CPX928 IC697CPX935 IC697CPU780 IC697CPU788 IC697CPU789 IC697CPU731 IC697CGR772 IC697CGR935 IC697CPM790	IC697CMM711	RS-232	User preparing RS232 connection diagram 1)	GT11H-CNB-37S	GT11H-C30-37P (3m)	GT14 Handy	6m	1 PLC for 1 GOT

*1 Product manufactured by GE Automation Corporation. For details of the product, contact GE Automation Corporation.

(2) When using the external cable (GT11H-C□□□-37P)

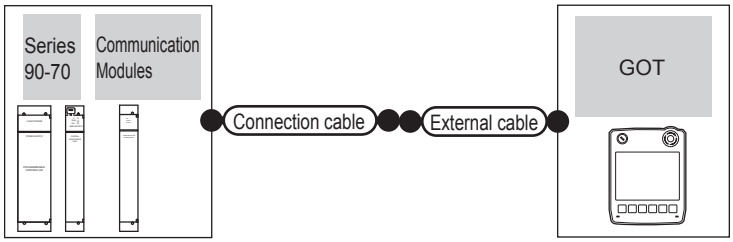

PLC			Connection cable	External cable	GOT model	Total distance	Number of connectable equipment
Model	Communication Modules*1	Communication type	Cable model Connection diagram number				
IC697CPX772 IC697CPX782 IC697CPX928 IC697CPX935 IC697CPU780 IC697CPU788 IC697CPU789 IC697CPU731 IC697CGR772 IC697CGR935 IC697CPM790	IC697CMM711	RS-232	User preparing RS232 connection diagram 2)	GT11H-C30-37P(3m)	GT14 Handy	6m	1 PLC for 1 GOT

*1 Product manufactured by GE Automation Corporation. For details of the product, contact GE Automation Corporation.

(3) When using the external cable (GT11H-C□□□)

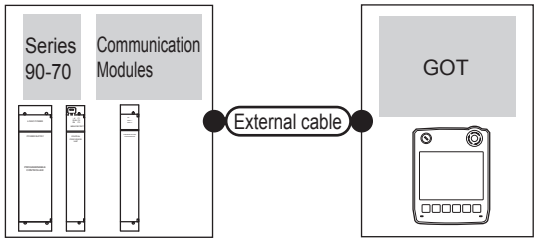

PLC			External cable	GOT model	Total distance	Number of connectable equipment
Model	Communication Modules*1	Communication type				
IC697CPX772 IC697CPX782 IC697CPX928 IC697CPX935 IC697CPU780 IC697CPU788 IC697CPU789 IC697CPU731 IC697CGR772 IC697CGR935 IC697CPM790	IC697CMM711	RS-232	GT11H-C30(3m) GT11H-C60(6m) User preparing RS232 connection diagram 3)	GT14 Handy	6m	1 PLC for 1 GOT

*1 Product manufactured by GE Automation Corporation. For details of the product, contact GE Automation Corporation.

■ For the RS-422 connection

(1) When using the connector conversion box

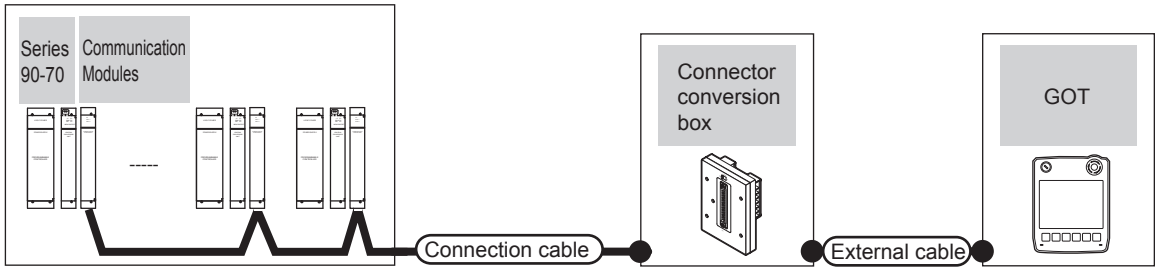

PLC			Connection cable	Connector conversion box	External cable	GOT model	Total distance	Number of connectable equipment
PLC	Communication Modules*1	Communication type	Cable model Connection diagram number					
IC697CPX772 IC697CPX782 IC697CPX928 IC697CPX935 IC697CPU780 IC697CPU788 IC697CPU789 IC697CPU731 IC697CGR772 IC697CGR935 IC697CPM790	IC697CMM711	RS-422	User preparing RS422 connection diagram 1)	GT11H-CNB-37S	GT11H-C30-37P(3m) GT11H-C60-37P(6m) GT11H-C100-37P(10m)	GT14 Handy	13m	8 PLCs for 1 GOT

*1 Product manufactured by GE Automation Corporation. For details of the product, contact GE Automation Corporation.

(2) When using the external cable (GT11H-C□□□-37P)

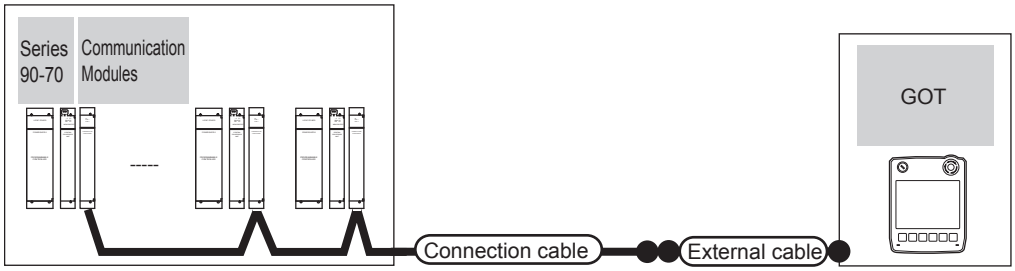

PLC			Connection cable	External cable	GOT model	Total distance	Number of connectable equipment
PLC	Communication Modules*1	Communication type	Cable model Connection diagram number				
IC697CPX772 IC697CPX782 IC697CPX928 IC697CPX935 IC697CPU780 IC697CPU788 IC697CPU789 IC697CPU731 IC697CGR772 IC697CGR935 IC697CPM790	IC697CMM711	RS-422	User preparing RS422 connection diagram 2)	GT11H-C30-37P(3m) GT11H-C60-37P(6m) GT11H-C100-37P(10m)	GT14 Handy	13m	8 PLCs for 1 GOT

*1 Product manufactured by GE Automation Corporation. For details of the product, contact GE Automation Corporation.

(3) When using the external cable (GT11H-C□□□)

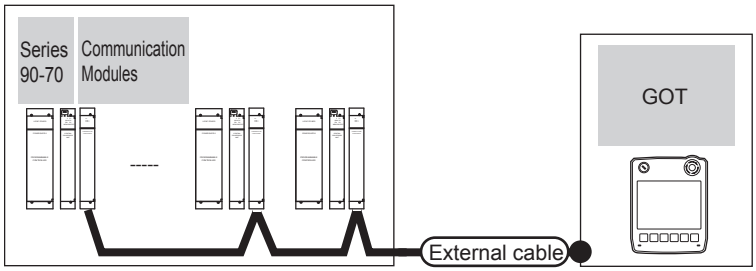

PLC			External cable	GOT model	Total distance	Number of connectable equipment
PLC	Communication Modules*1	Communication type				
IC697CPX772 IC697CPX782 IC697CPX928 IC697CPX935 IC697CPU780 IC697CPU788 IC697CPU789 IC697CPU731 IC697CGR772 IC697CGR935 IC697CPM790	IC697CMM711	RS-422	GT11H-C30(3m) GT11H-C60(6m) GT11H-C100(10m) User preparing RS422 connection diagram 3)	GT14 Handy	13m	8 PLCs for 1 GOT

*1 Product manufactured by GE Automation Corporation. For details of the product, contact GE Automation Corporation.

55.2.3 Connecting to VersaMax Micro

POINT

Only the models that are compatible with SNP-X protocol can be connected.

■ For the RS-232 connection

(1) When using the connector conversion box

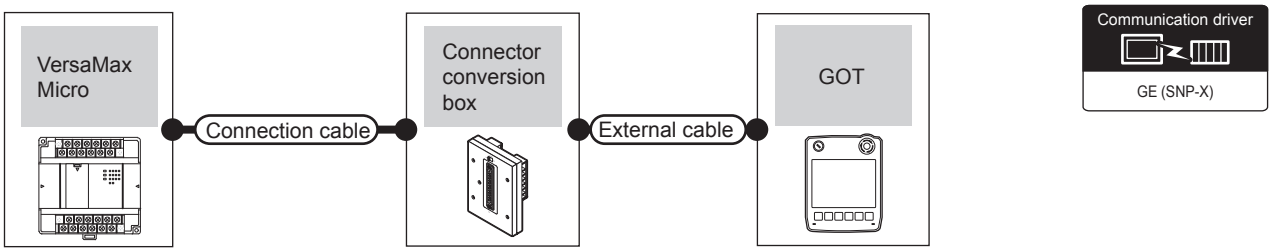

PLC		Connection cable	Connector conversion box	External cable	GOT model	Total distance	Number of connectable equipment
Model	Communication type	Cable model Connection diagram number					
IC200UAA003 IC200UAR014 IC200UDD104 IC200UDD112 IC200UDR001 IC200UDR002 IC200UDR003 IC200UAL004 IC200UAL005 IC200UAL006 IC200UAA007 IC200UAR028 IC200UDD110 IC200UDD120 IC200UDD212 IC200UDR005 IC200UDR006 IC200UDR010 IC200UDD064 IC200UDD164 IC200UDR164 IC200UDR064	RS-232	User preparing RS232 connection diagram 4)	GT11H-CNB-37S	GT11H-C30-37P(3m)	GT14 Handy	6m	1 PLC for 1 GOT

(2) When using the external cable (GT11H-C□□□-37P)

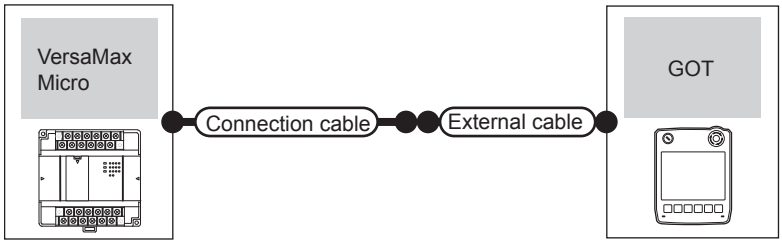

PLC		Connection cable	External cable	GOT model	Total distance	Number of connectable equipment
Model	Communication type	Cable model Connection diagram number				
IC200UAA003 IC200UAR014 IC200UDD104 IC200UDD112 IC200UDR001 IC200UDR002 IC200UDR003 IC200UAL004 IC200UAL005 IC200UAL006 IC200UAA007 IC200UAR028 IC200UDD110 IC200UDD120 IC200UDD212 IC200UDR005 IC200UDR006 IC200UDR010 IC200UDD064 IC200UDD164 IC200UDR164 IC200UDR064	RS-232	User preparing RS232 connection diagram 5)	GT11H-C30-37P(3m)	GT14 Handy	6m	1 PLC for 1 GOT

(3) When using the external cable (GT11H-C□□□)

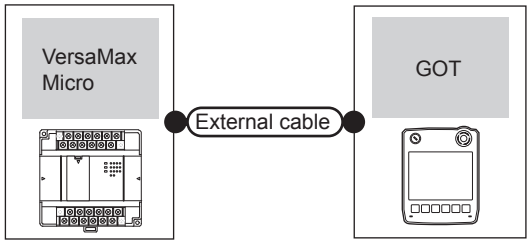

PLC		External cable	GOT model	Total distance	Number of connectable equipment
Model	Communication type				
IC200UAA003 IC200UAR014 IC200UDD104 IC200UDD112 IC200UDR001 IC200UDR002 IC200UDR003 IC200UAL004 IC200UAL005 IC200UAL006 IC200UAA007 IC200UAR028 IC200UDD110 IC200UDD120 IC200UDD212 IC200UDR005 IC200UDR006 IC200UDR010 IC200UDD064 IC200UDD164 IC200UDR164 IC200UDR064	RS-232	GT11H-C30(3m) GT11H-C60(6m) User preparing RS232 connection diagram 6)	GT14 Handy	6m	1 PLC for 1 GOT

■ For the RS-422 connection

(1) When using the connector conversion box

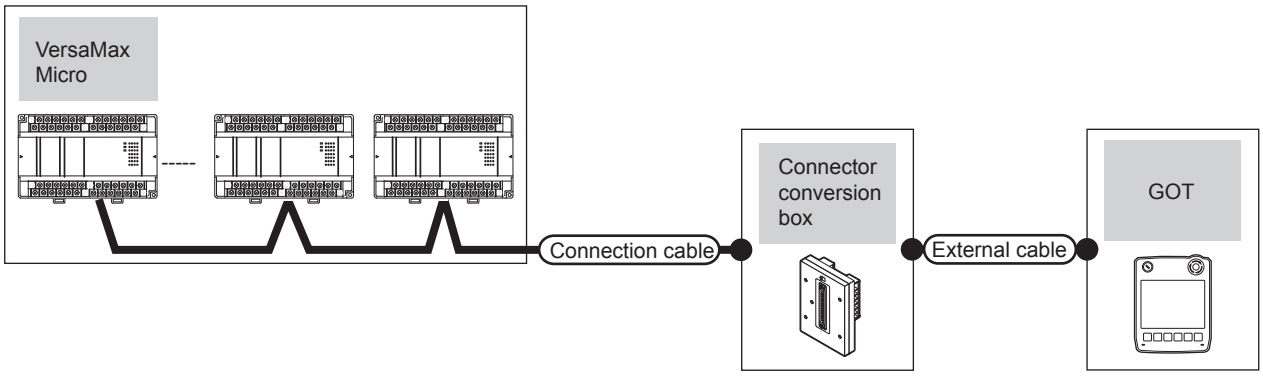

PLC		Connection cable	Connector conversion box	External cable	GOT model	Total distance	Number of connectable equipment
PLC	Communication type	Cable model Connection diagram number					
IC200UAL004 IC200UAL005 IC200UAL006 IC200UAA007 IC200UAR028 IC200UDD110 IC200UDD120 IC200UDD212 IC200UDR005 IC200UDR006 IC200UDR010 IC200UDD064 IC200UDD164 IC200UDR164 IC200UDR064	RS-422	User preparing RS422 connection diagram 7)	GT11H-CNB-37S	GT11H-C30-37P(3m) GT11H-C60-37P(6m) GT11H-C100-37P(10m)	GT14 Handy	13m	Up to 8 PLCs for 1 GOT

(2) When using the external cable (GT11H-C□□□-37P)

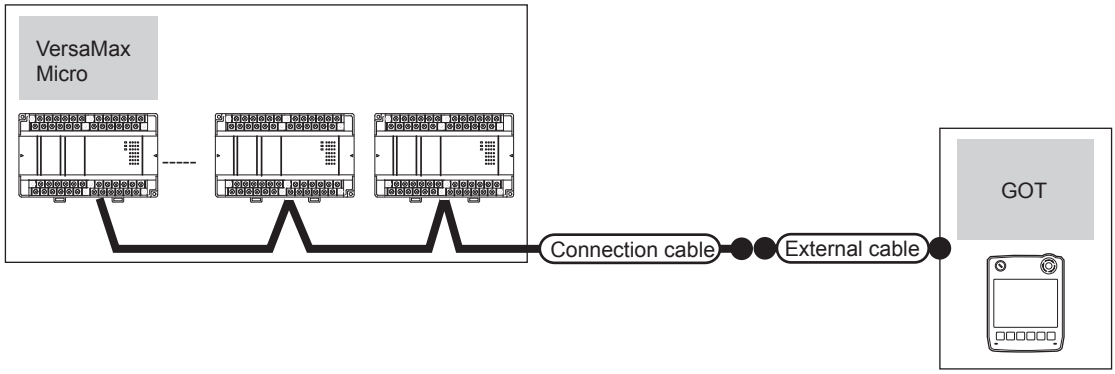

PLC		Connection cable	External cable	GOT model	Total distance	Number of connectable equipment
PLC	Communication type	Cable model Connection diagram number				
IC200UAL004 IC200UAL005 IC200UAL006 IC200UAA007 IC200UAR028 IC200UDD110 IC200UDD120 IC200UDD212 IC200UDR005 IC200UDR006 IC200UDR010 IC200UDD064 IC200UDD164 IC200UDR164 IC200UDR064	RS-422	User preparing RS422 connection diagram 8)	GT11H-C30-37P(3m) GT11H-C60-37P(6m) GT11H-C100-37P(10m)	GT14 Handy	13m	Up to 8 PLCs for 1 GOT

(3) When using the external cable (GT11H-C□□□)

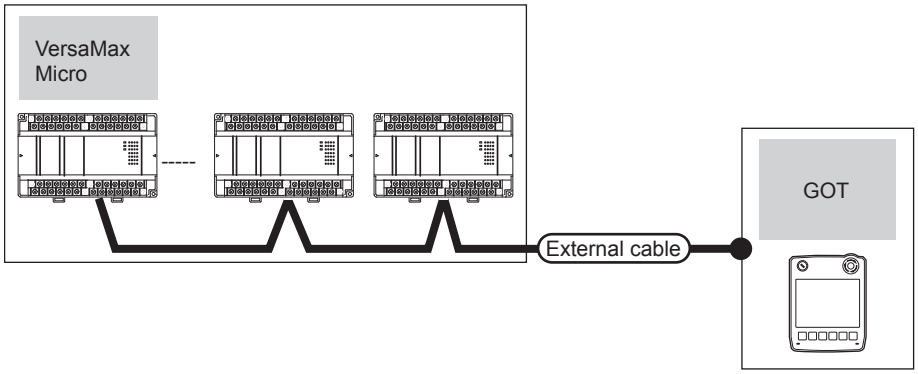

PLC		External cable	GOT model	Total distance	Number of connectable equipment
PLC	Communication type				
IC200UAL004 IC200UAL005 IC200UAL006 IC200UAA007 IC200UAR028 IC200UDD110 IC200UDD120 IC200UDD212 IC200UDR005 IC200UDR006 IC200UDR010 IC200UDD064 IC200UDD164 IC200UDR164 IC200UDR064	RS-422	GT11H-C30(3m) GT11H-C60(6m) GT11H-C100(10m) User preparing RS422 connection diagram 9)	GT14 Handy	13m	Up to 8 PLCs for 1 GOT

55.3 Connection Diagram

The following diagram shows the connection between the GOT and the PLC.

55.3.1 RS-232 cable

■ Connection diagram

RS232 connection diagram 1)

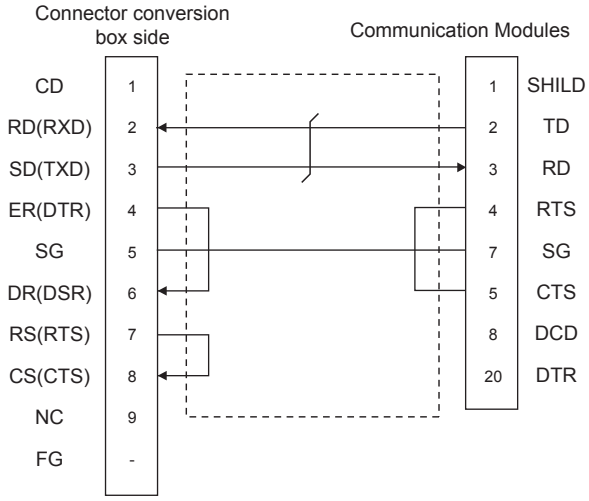

RS232 connection diagram 2)

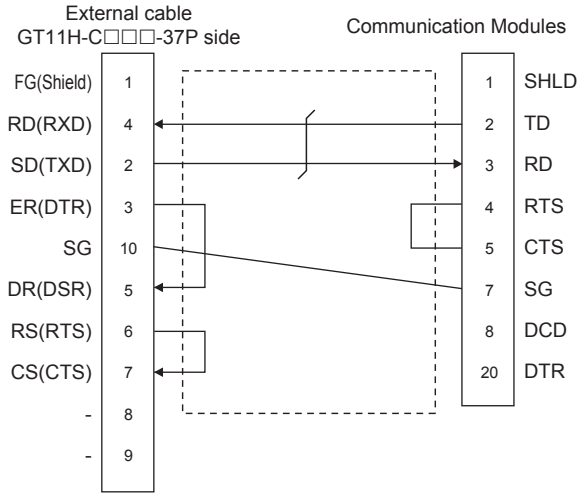

RS232 connection diagram 3)

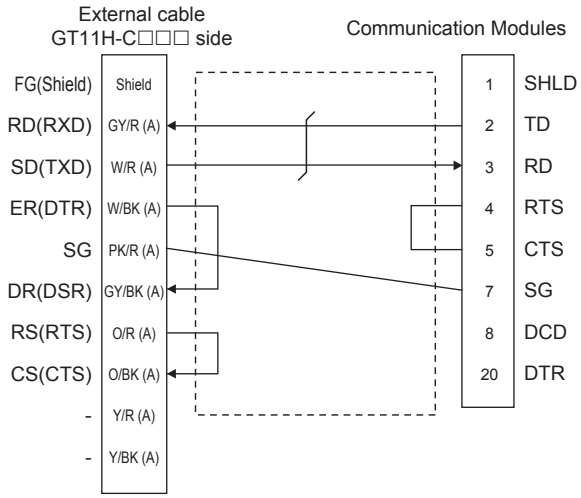

RS232 connection diagram 4)

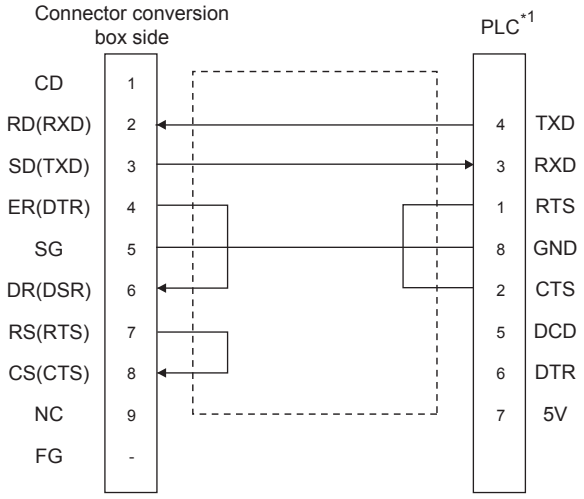

*1 For details of the pin assignment, refer to the following manual.

GE PLC user's Manual

RS232 connection diagram 5)

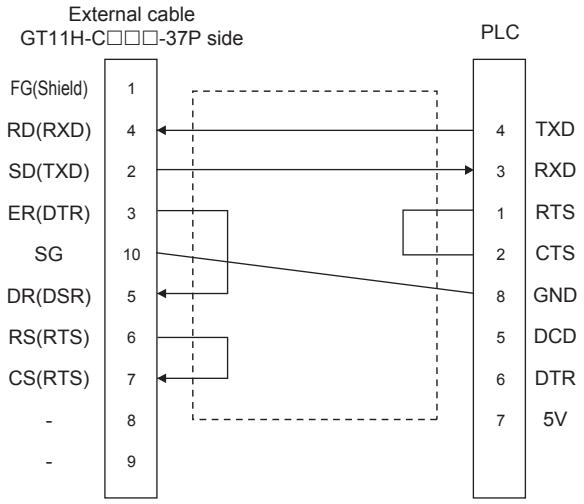

RS232 connection diagram 6)

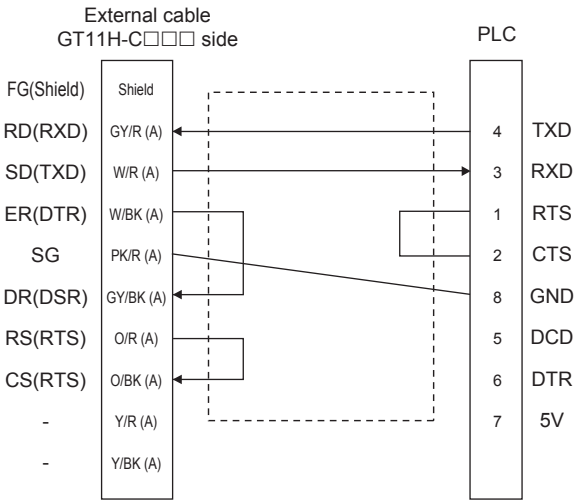

■ Precautions when preparing a cable

(1) Cable length
The total distance (between the GOT and a controller) of RS-232 cable must be 6m or less.

(2) Connector conversion box side connector
For the connector conversion box side connector, refer to the following.

☞ 6.6 Connector Conversion Box

(3) External cable side connector
For the connector specifications of the external cable side, refer to the following.

☞ 8.2 External Cable, Relay Cable

(4) GE PLC side connector
Use the connector compatible with the GE PLC side. For details, refer to the GE PLC user's manual.

55.3.2 RS-422 cable

■ Connection diagram

RS422 connection diagram 1)

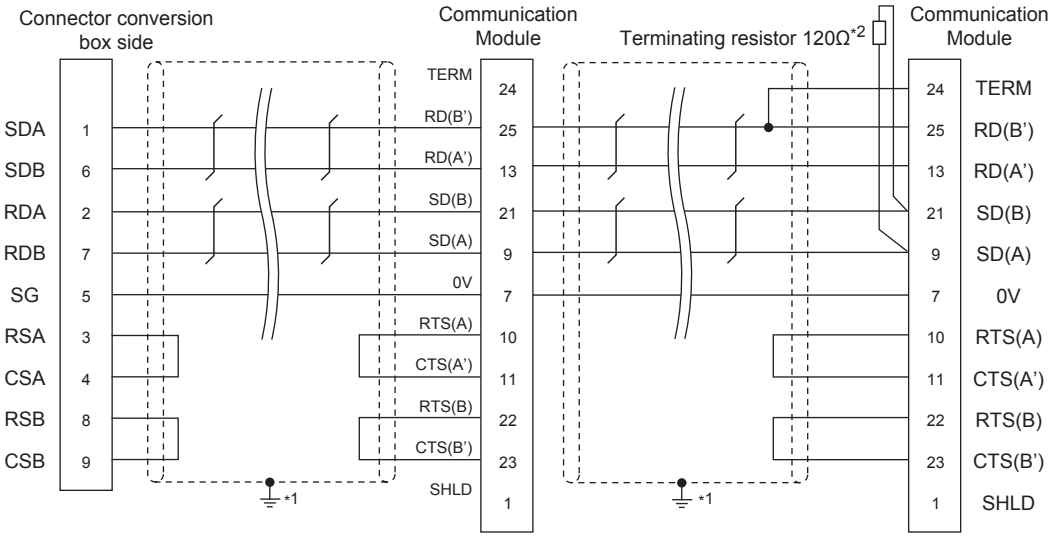

*1 Connect FG grounding to the appropriate part of a cable shield line.
*2 A terminating resistor should be connected to communication module at a terminal station.

RS422 connection diagram 2)

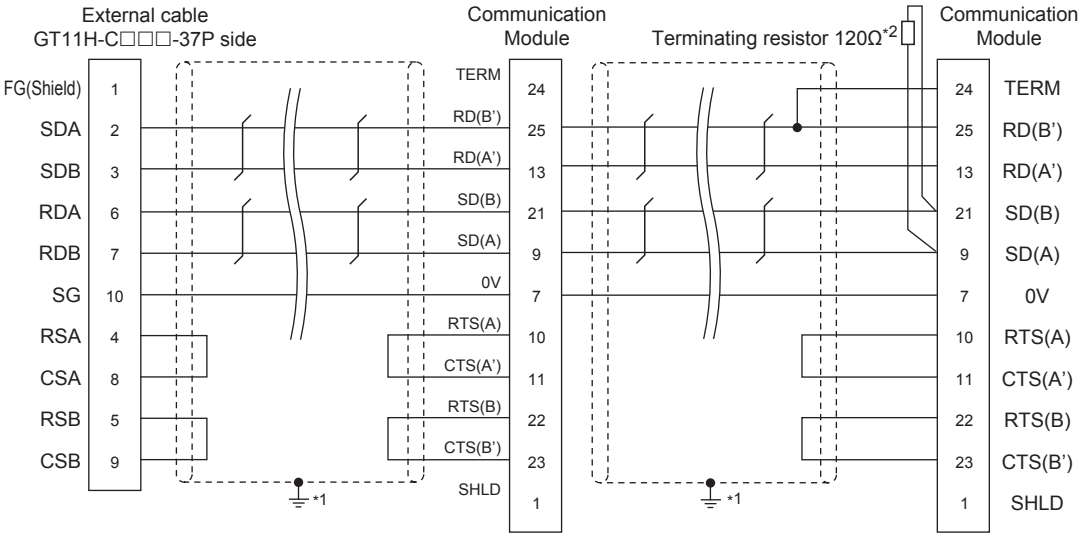

*1 Connect FG grounding to the appropriate part of a cable shield line.
*2 A terminating resistor should be connected to communication module at a terminal station.

RS422 connection diagram 3)

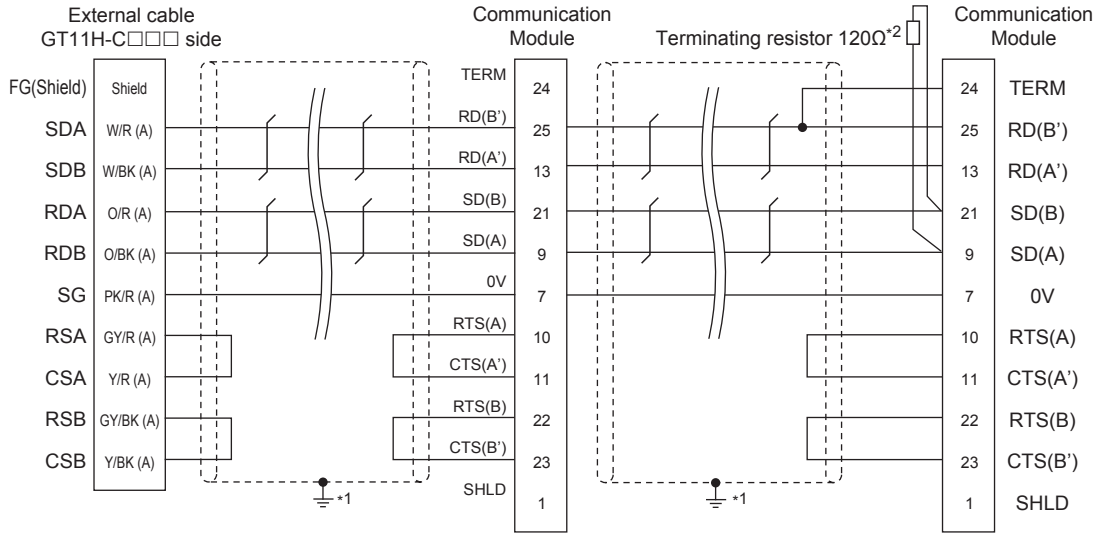

*1 Connect FG grounding to the appropriate part of a cable shield line.

*2 A terminating resistor should be connected to communication module at a terminal station.

RS422 connection diagram 4)

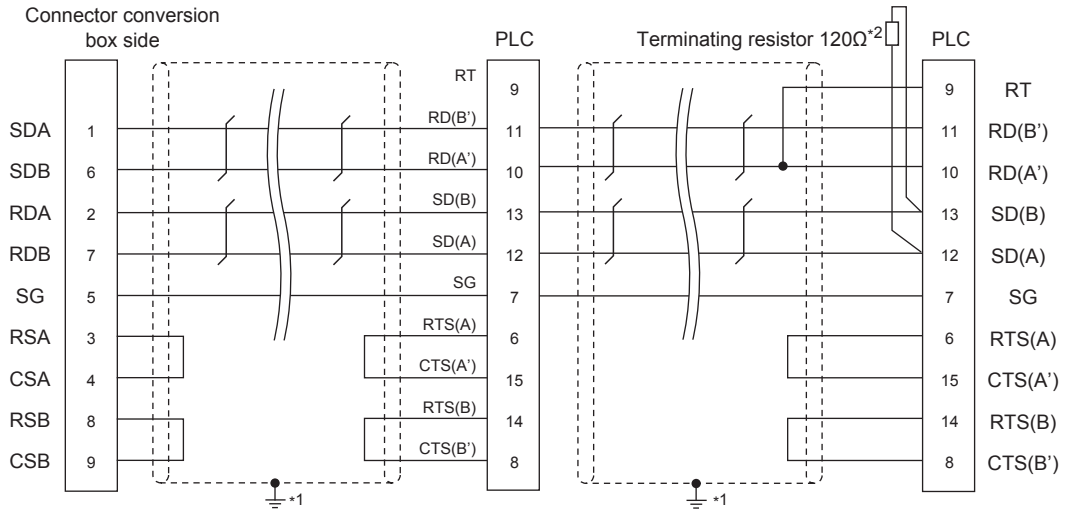

*1 Connect FG grounding to the appropriate part of a cable shield line.

*2 Terminating resistor should be provided for a PLC which will be a terminal.

RS422 connection diagram 5)

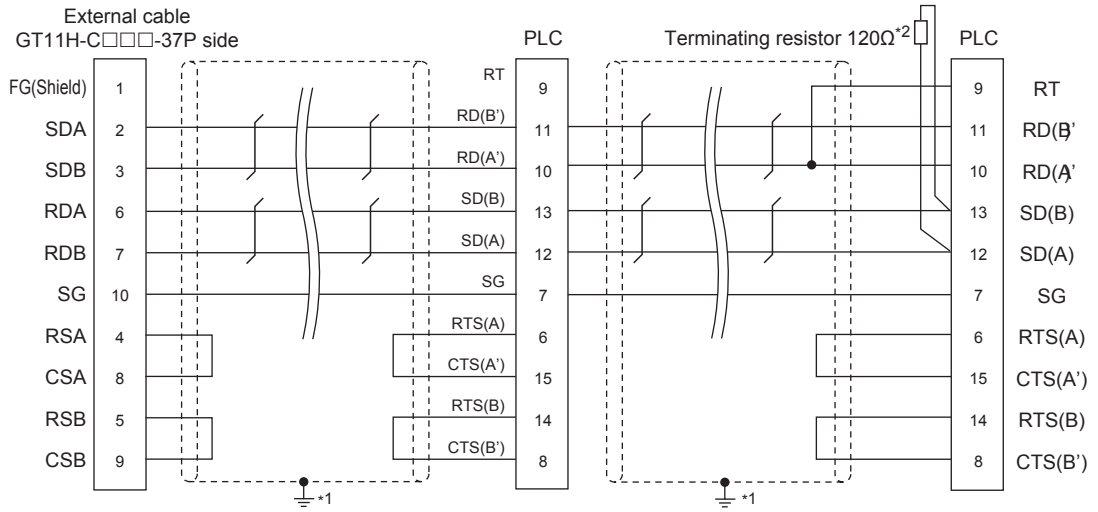

*1 Connect FG grounding to the appropriate part of a cable shield line.

*2 A terminating resistor should be connected to communication module at a terminal station.

RS422 connection diagram 6)

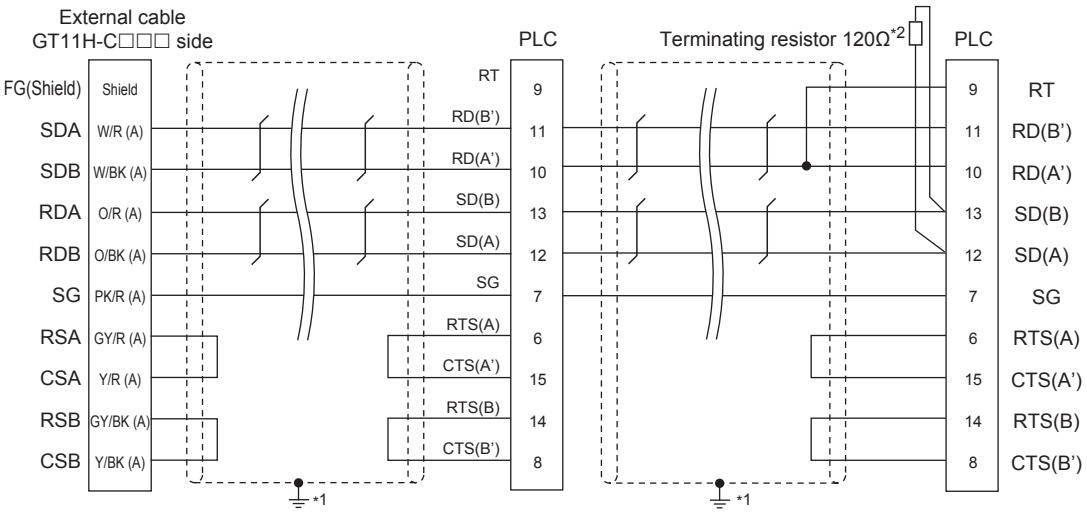

*1 Connect FG grounding to the appropriate part of a cable shield line.
*2 A terminating resistor should be connected to communication module at a terminal station.

RS422 connection diagram 7)

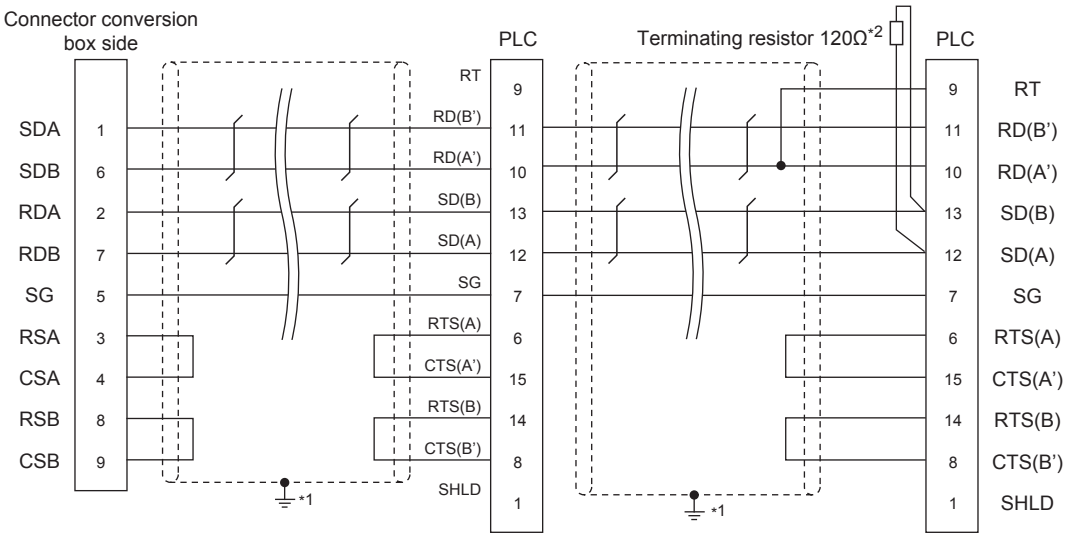

*1 Connect FG grounding to the appropriate part of a cable shield line.
*2 Terminating resistor should be provided for a PLC which will be a terminal.

RS422 connection diagram 8)

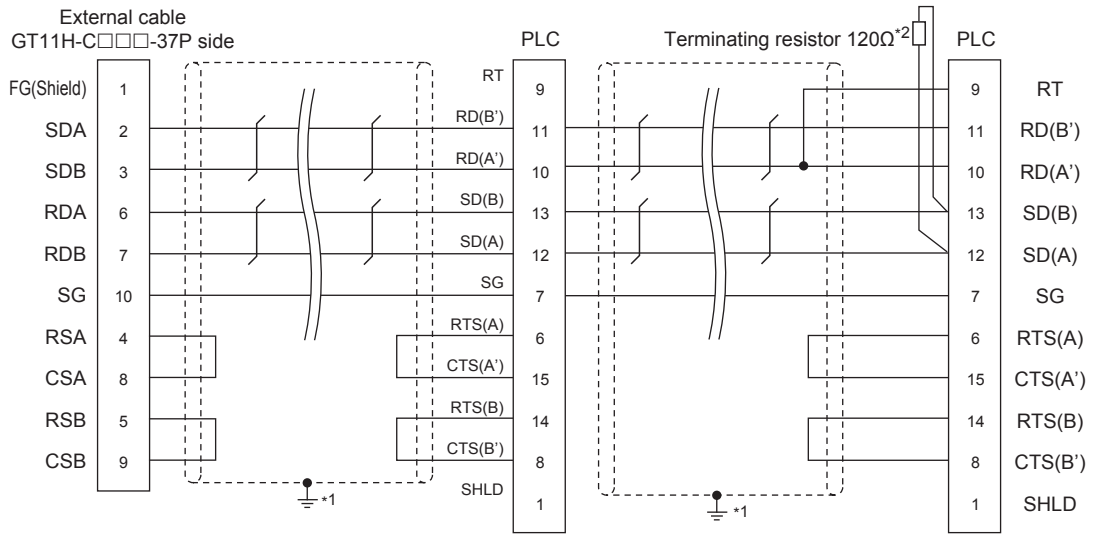

*1 Connect FG grounding to the appropriate part of a cable shield line.

*2 A terminating resistor should be connected to communication module at a terminal station.

RS422 connection diagram 9)

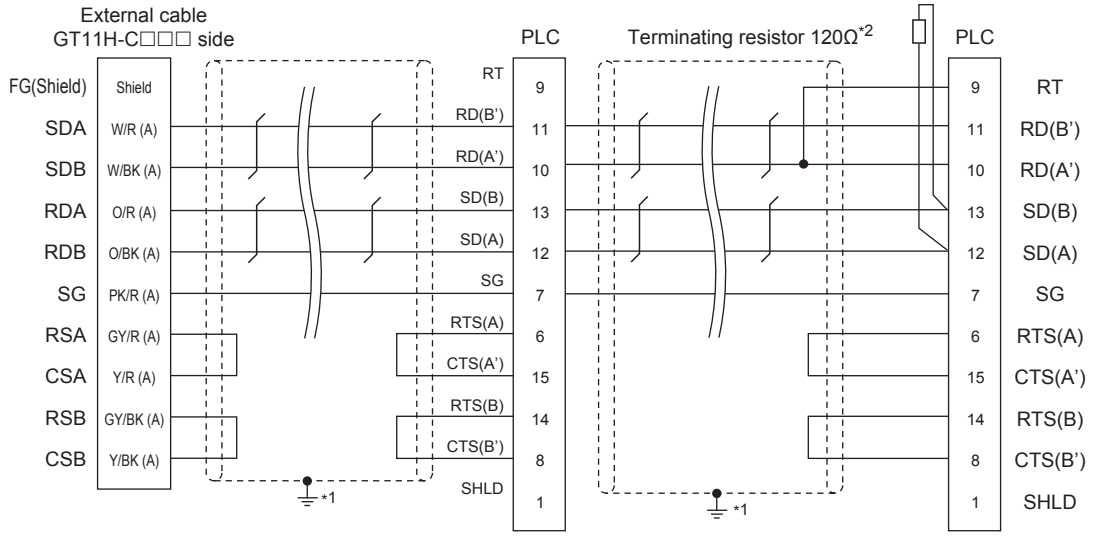

*1 Connect FG grounding to the appropriate part of a cable shield line.

*2 A terminating resistor should be connected to communication module at a terminal station.

■ Precautions when preparing a cable

(1) Cable length
The total distance (between GOT and controllers) of RS-422 cable must be 13m or less.

(2) Connector conversion box side connector
For the connector conversion box side connector, refer to the following.

☞ 6.6 Connector Conversion Box

(3) External cable side connector
For the connector specifications of the external cable side, refer to the following.

☞ 8.2 External Cable, Relay Cable

(4) GE PLC side connector
Use the connector compatible with the GE PLC side.
For details, refer to the GE PLC user's manual.

■ Connecting terminating resistors

(1) GE PLC side
When connecting a GE PLC to the GOT, a terminating resistor must be connected.

☞ GE PLC user's Manual

55.4 GOT Side Settings

55.4.1 Setting communication interface (Communication settings)

Set the channel of the connected equipment.

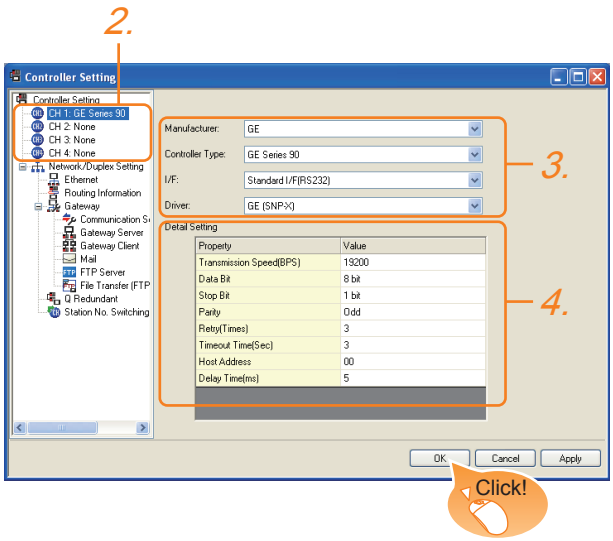

1. Select [Common] → [Controller Setting] from the menu.
2. The Controller Setting window is displayed. Select the channel to be used from the list menu.
3. Set the following items.
   - Manufacturer: GE
   - Controller Type: GE Series 90
   - I/F: Interface to be used
   - Driver: GE (SNP-X)
4. The detailed setting is displayed after Manufacturer, Controller Type, I/F, and Driver are set.
   Make the settings according to the usage environment.
   ☞ 55.4.2 Communication detail settings

Click the [OK] button when settings are completed.

POINT

The settings of connecting equipment can be confirmed in [I/F Communication Setting].
For details, refer to the following.
☞ 18.1.2 I/F communication setting

55.4.2 Communication detail settings

Make the settings according to the usage environment.

Item	Description	Range
Transmission Speed	Set this item when change the transmission speed used for communication with the connected equipment. (Default: 19200bps)	9600bps 19200bps 38400bps 57600bps 115200bps
Data Bit*1	Set this item when change the data length used for communication with the connected equipment. (Default: 8bit)	7bit/8bit
Stop Bit	Specify the stop bit length for communications. (Default: 1bit)	1bit/2bits
Parity	Specify whether or not to perform a parity check, and how it is performed during communication. (Default: Odd)	None Even Odd
Retry	Set the number of retries to be performed when a communication error occurs. (Default: 3times)	0 to 5times
Timeout Time	Set the time period for a communication to time out. (Default: 3sec)	3 to 30sec
Host Address	Specify the host address (station No. of the GOT to which the PLC is connected) in the connected network. (Default: 00)	00 to 31
Delay Time	Set this item to adjust the transmission timing of the communication request from the GOT. (Default: 5ms)	0 to 300ms

*1 If no setting is provided for the data length for the controller, set "8 bits".
If the setting is provided for the data length for the controller, set the same set value for the data length for the GOT as that for the PLC.

POINT

(1) Communication interface setting by Utility
The communication interface setting can be changed on the Utility's [Communication setting] after writing [Communication Settings] of project data.
For details on the Utility, refer to the following manual.
☞ 11. COMMUNICATION INTERFACE SETTING (COMMUNICATION SETTING)

(2) Precedence in communication settings
When settings are made by GT Designer3 or the Utility, the latest setting is effective.

55.5 PLC Side Setting

POINT

GE PLC

For details of GE PLCs, refer to the following manuals.

☞ GE PLC user's Manual

Model		Refer to
PLC CPU	Series 90-30	55.5.1
	VersaMaxMicro	55.5.2
Communication Modules	IC693CMM311	55.5.3
	IC697CMM711	55.5.4

55.5.1 Connecting to Series 90-30

■ Communication settings

Make the communication settings using the engineering tool.

When making the settings, set [Configuration Mode] on the [Setting] tab of the engineering tool to "SNP only".

Setting item	PLC side setting
Port Mode*1	SNP
Port Type*2	Slave
Data Rate	9600bps, 19200bps
Flow Control	NONE
Parity	EVEN, ODD, NONE
Stop Bits	1bit, 2bits
Timeout*3	Long
Turn Around Delay*4	0
SNP ID*5	00 to 31
Converter Power Consumption*6	0

*1 Set to SNP.
*2 Set to Slave.
*3 Set to Long.
*4 Set to 0.
*5 Set within the range of 00 to 31.
When specifying the station No. from 0 to 9, add "0" before the number and set it as 00 to 09.
*6 Set to 0. (only when connecting to Port2)

55.5.2 Connecting to VersaMaxMicro

■ Communication settings

Make the communication settings using the engineering tool.

Setting item	PLC side setting
Data Rate	9600bps, 19200bps, 38400bps
Bits/Character*6	7bits, 8bits
Parity	EVEN, ODD, NONE
Stop Bits	1bit, 2bits
Port Mode*1	SNP
Port Type*2	Slave
Flow Control	NONE
Timeout*3	Long
Turn Around Delay*4	0
SNP ID*5	00 to 31

*1 Set to the SNP protocol.
*2 Set to Slave.
*3 Set to Long.
*4 Set to 0.
*5 Set within the range of 00 to 31.
When specifying the station No. from 0 to 9, add "0" before the number and set it as 00 to 09.
*6 Set the same set value for the data length for the GOT and PLC.

55.5.3 Connecting to IC693CMM311

■ Communication settings

Make the communication settings using the engineering tool.

When making the settings, set [Configuration Mode] on the [Setting] tab of the engineering tool to "SNP only".

Setting item	PLC side setting
SNP Enable*1	YES
SNP Mode*2	Slave
Interface*3	RS232, RS485
Data Rate	9600bps, 19200bps
Parity	ODD, NONE, EVEN
Stop Bits	1bit, 2bits
Flow Control*4	NONE
Turn Around Delay*5	NONE
Timeout*6	Long

*1 Set to YES.
*2 Set to Slave.
*3 Set the communication format to be used.
(only when connecting to Port2)
*4 Set to NONE.
*5 Set to NONE.
*6 Set to LONG.

55.5.4 Connecting to IC697CMM711

■ Communication settings

Make the communication settings using the engineering tool.

When making the settings, set [Configuration Mode] on the [Setting] tab of the engineering tool to "SNP only".

Setting item	PLC side setting
SNP Enable*1	YES
SNP Mode*2	Slave
Interface*3	RS232, RS485
Data Rate	9600bps, 19200bps
Parity	ODD, NONE, EVEN
Stop Bits	1bit, 2bits
Flow Control*4	NONE
Turn Around Delay*5	NONE
Timeout*6	Long

*1 Set to YES.
*2 Set to Slave.
*3 Set the communication format to be used.
(only when connecting to Port2)
*4 Set to NONE.
*5 Set to NONE.
*6 Set to LONG.

55.5.5 Station number setting

Set each station number so that no station number overlaps.

The station number can be set without regard to the cable connection order. There is no problem even if station numbers are not consecutive.

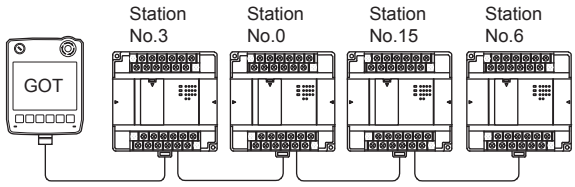

Examples of station number setting

(1) Direct specification

Specify the station No. of the PLC to be changed when setting device.

Specification range
00 to 31

POINT

PLC Station NO. settings

Make sure to set a 2-digit number for the station No. of the PLC to be monitored by the GOT.

55.6 Device Range that Can Be Set

For details on the device range of controllers that can be used on GT14 Handy, refer to the following manuals.

☞ GT Designer3 Version1 Screen Design Manual (Fundamentals)

☞ GOT1000 Series Connection Manual (Non-Mitsubishi Products 2) for GT Works3

55.7 Precautions

■ GOT clock control

The PLC clock data cannot be written to or read from the GOT.
The settings of "time adjusting" or "time broadcast" made on the GOT will be disabled on the PLC.

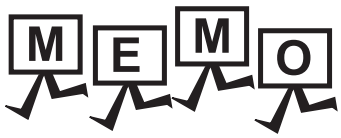
MEMO

56. CONNECTION TO LS INDUSTRIAL SYSTEMS PLC

56.1 Connectable Model List

The following table shows the connectable models.

Series	Model	Clock	Communication type	GT14 Handy	Refer to
K80S	K7M-D□□□S(/DC)	○	RS-232 RS-422	○	56.2.1
K120S	K7M-D□□□U				
K200S	K3P-07□S	○	RS-232 RS-422	○	56.2.2
K300S	K4P-15AS	○	RS-232 RS-422	○	56.2.3

56.2 System Configuration

56.2.1 Connecting to K80S or K120S

■ When connecting to one PLC

Communication driver
LS Industrial Systems MASTER-K

(1) When using the connector conversion box

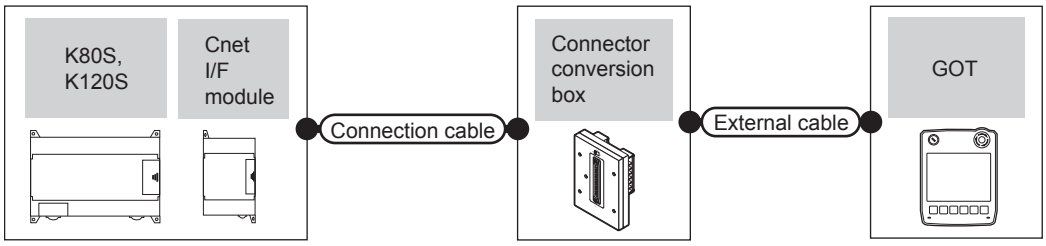

PLC			Connection cable	Connector conversion box	External cable	GOT model	Total distance	Number of connectable equipment
Series	Cnet I/F module*1	Communication type	Cable model Connection diagram number					
K80S K120S	-	RS-232	User preparing RS232 connection diagram 1)	GT11H-CNB-37S	GT11H-C30-37P(3m)	GT14 Handy	6m	1 PLC for 1 GOT
	G7L-CUEB	RS-232	User preparing RS232 connection diagram 4)					

*1 Product manufactured by LS Industrial Systems Co., Ltd. For details of the product, contact LS Industrial Systems Co., Ltd.

(2) When using the external cable (GT11H-C□□□-37P)

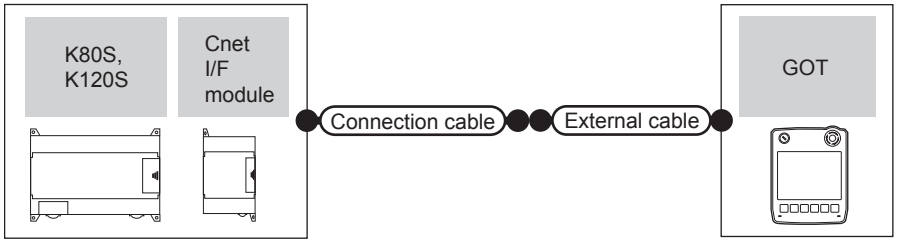

PLC			Connection cable	External cable	GOT model	Total distance	Number of connectable equipment
Series	Cnet I/F module*1	Communication type	Cable model Connection diagram number				
K80S K120S	-	RS-232	User preparing RS232 connection diagram 2)	GT11H-C30-37P(3m)	GT14 Handy	6m	1 PLC for 1 GOT
	G7L-CUEB	RS-232	User preparing RS232 connection diagram 5)				

*1 Product manufactured by LS Industrial Systems Co., Ltd. For details of the product, contact LS Industrial Systems Co., Ltd.

(3) When using the external cable (GT11H-C□□□)

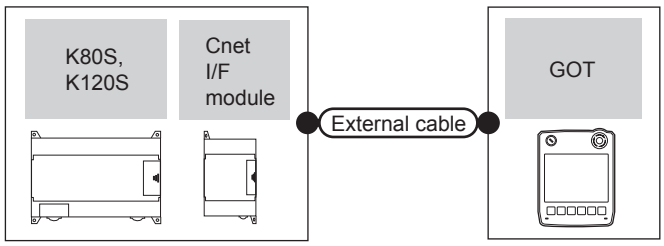

PLC			External cable	GOT model	Total distance	Number of connectable equipment
Series	Cnet I/F module*1	Communication type				
K80S K120S	-	RS-232	GT11H-C30(3m) GT11H-C60(6m) User preparing RS232 connection diagram 3)	GT14 Handy	6m	1 PLC for 1 GOT
	G7L-CUEB	RS-232	GT11H-C30(3m) GT11H-C60(6m) User preparing RS232 connection diagram 6)			

*1 Product manufactured by LS Industrial Systems Co., Ltd. For details of the product, contact LS Industrial Systems Co., Ltd.

■ When connecting to multiple PLCs

(1) When using the connector conversion box

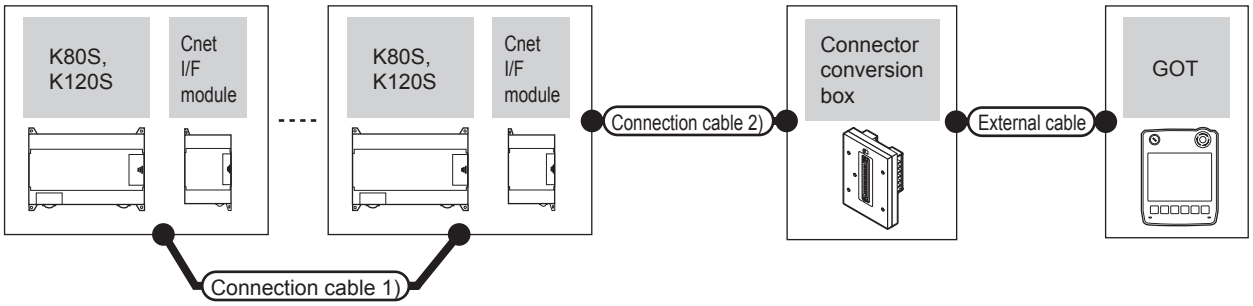

PLC	Connection cable 1)	Cnet I/F module*1		Connection cable 2)	Connector conversion box	External cable	GOT model	Total distance *2	Number of connectable equipment
Series	Cable model Connection diagram number	Model	Communication type	Cable model Connection diagram number					
K80S K120S	User preparing RS422 connection diagram 4)	G7L-CUEC	RS-422	User preparing RS422 connection diagram 1)	GT11H-CNB-37S	GT11H-C30-37P(3m) GT11H-C60-37P(6m) GT11H-C100-37P(10m)	GT14 Handy	13m	10 PLCs for 1 GOT

*1 Product manufactured by LS Industrial Systems Co., Ltd. For details of the product, contact LS Industrial Systems Co., Ltd.

*2 The distance from the GOT to the PLC (Connection cable 1) + Connection cable 2) + External cable)

(2) When using the external cable (GT11H-C□□□-37P)

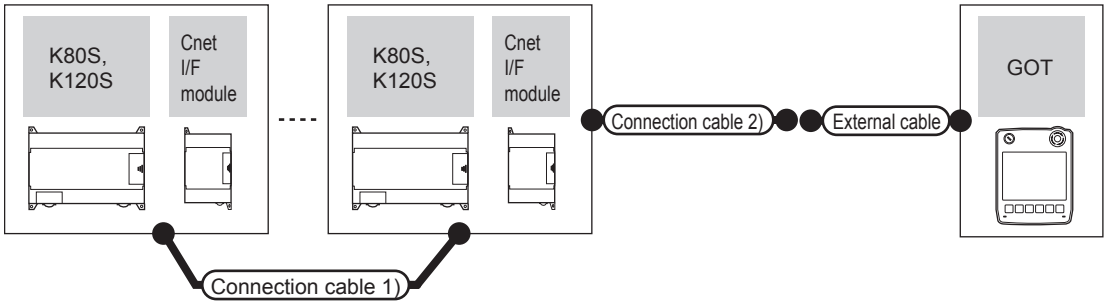

PLC	Connection cable 1)	Cnet I/F module*1		Connection cable 2)	External cable	GOT model	Total distance *2	Number of connectable equipment
Series	Cable model Connection diagram number	Model	Communication type	Cable model Connection diagram number				
K80S K120S	User preparing RS422 connection diagram 4)	G7L-CUEC	RS-422	User preparing RS422 connection diagram 2)	GT11H-C30-37P(3m) GT11H-C60-37P(6m) GT11H-C100-37P(10m)	GT14 Handy	13m	10 PLCs for 1 GOT

*1 Product manufactured by LS Industrial Systems Co., Ltd. For details of the product, contact LS Industrial Systems Co., Ltd.
*2 The distance from the GOT to the PLC (Connection cable 1) + Connection cable 2) + External cable)

(3) When using the external cable (GT11H-C□□□)

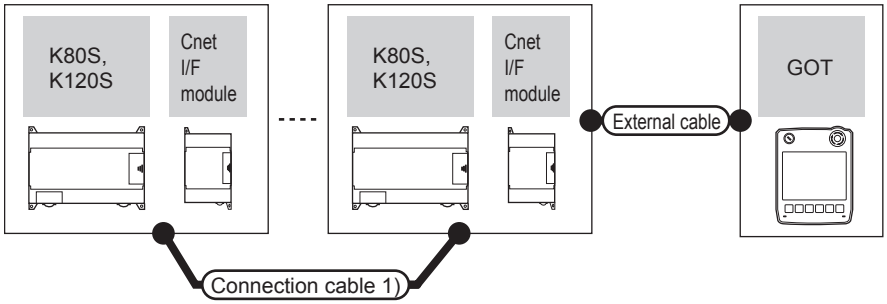

PLC	Connection cable 1)	Cnet I/F module*1		External cable	GOT model	Total distance *2	Number of connectable equipment
Series	Cable model Connection diagram number	Model	Communication type				
K80S K120S	User preparing RS422 connection diagram 4)	G7L-CUEC	RS-422	GT11H-C30(3m) GT11H-C60(6m) GT11H-C100(10m) User preparing RS422 connection diagram 3)	GT14 Handy	13m	10 PLCs for 1 GOT

*1 Product manufactured by LS Industrial Systems Co., Ltd. For details of the product, contact LS Industrial Systems Co., Ltd.
*2 The distance from the GOT to the PLC (Connection cable 1) + External cable)

56.2.2 Connecting to K200S

■ When connecting to one PLC

Communication driver
LS Industrial Systems MASTER-K

(1) When using the connector conversion box

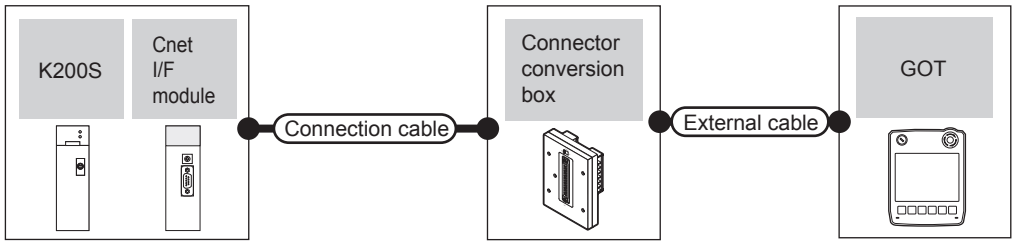

PLC			Connection cable	Connector conversion box	External cable	GOT model	Total distance	Number of connectable equipment
Series	Cnet I/F module*1	Communication type	Cable model Connection diagram number					
K200S	G6L-CUEB	RS-232	User preparing RS232 connection diagram 4)	GT11H-CNB-37S	GT11H-C30-37P(3m)	GT14 Handy	6m	1 PLC for 1 GOT

*1 Product manufactured by LS Industrial Systems Co., Ltd. For details of the product, contact LS Industrial Systems Co., Ltd.

(2) When using the external cable (GT11H-C□□□-37P)

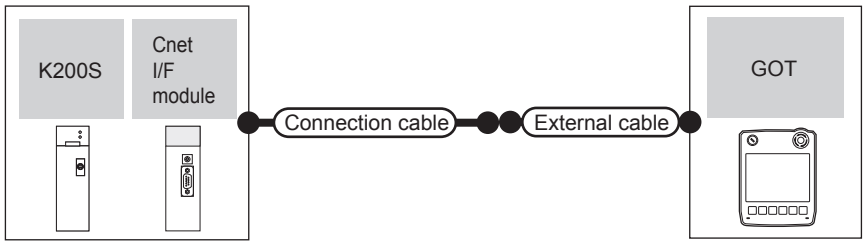

PLC			Connection cable	External cable	GOT model	Total distance	Number of connectable equipment
Series	Cnet I/F module*1	Communication type	Cable model Connection diagram number				
K200S	G6L-CUEB	RS-232	User preparing RS232 connection diagram 5)	GT11H-C30-37P(3m)	GT14 Handy	6m	1 PLC for 1 GOT

*1 Product manufactured by LS Industrial Systems Co., Ltd. For details of the product, contact LS Industrial Systems Co., Ltd.

(3) When using the external cable (GT11H-C□□□)

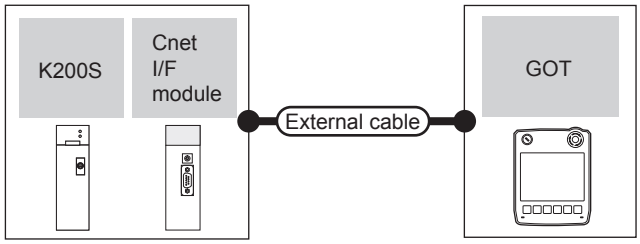

PLC			External cable	GOT model	Total distance	Number of connectable equipment
Series	Cnet I/F module*1	Communication type				
K200S	G6L-CUEB	RS-232	GT11H-C30(3m) GT11H-C60(6m) User preparing RS232 connection diagram 6)	GT14 Handy	6m	1 PLC for 1 GOT

*1 Product manufactured by LS Industrial Systems Co., Ltd. For details of the product, contact LS Industrial Systems Co., Ltd.

■ When connecting to multiple PLCs

(1) When using the connector conversion box

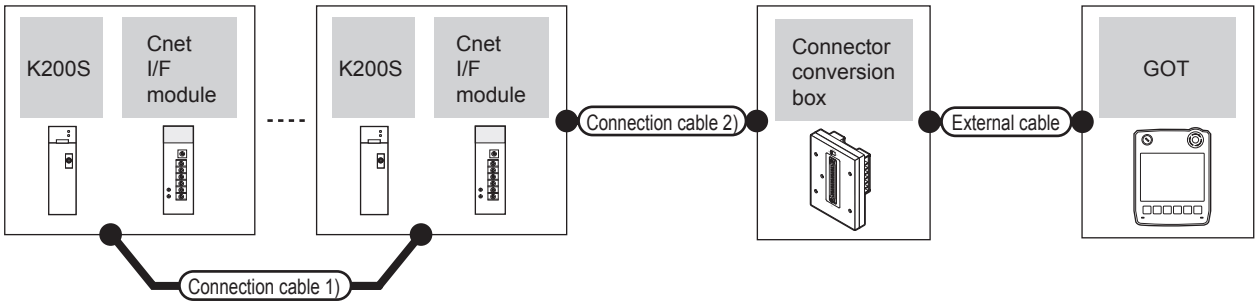

PLC Series	Connection cable 1) Cable model Connection diagram number	Cnet I/F module*1 Model	Cnet I/F module*1 Communication type	Connection cable 2) Cable model Connection diagram number	Connector conversion box	External cable	GOT model	Total distance *2	Number of connectable equipment
K200S	User preparing RS422 connection diagram 4)	G6L-CUEC	RS-422	User preparing RS422 connection diagram 1)	GT11H-CNB-37S	GT11H-C30-37P(3m) GT11H-C60-37P(6m) GT11H-C100-37P(10m)	GT14 Handy	13m	10 PLCs for 1 GOT

*1 Product manufactured by LS Industrial Systems Co., Ltd. For details of the product, contact LS Industrial Systems Co., Ltd.
*2 The distance from the GOT to the PLC (Connection cable 1) + Connection cable 2) + External cable)

(2) When using the external cable (GT11H-C□□□-37P)

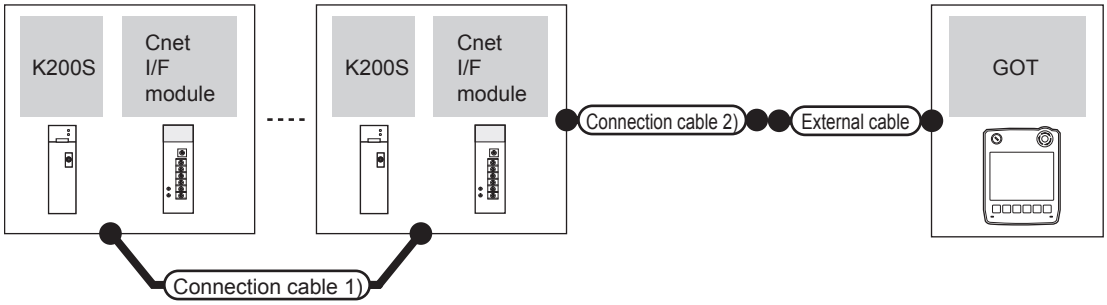

PLC Series	Connection cable 1) Cable model Connection diagram number	Cnet I/F module*1 Model	Cnet I/F module*1 Communication type	Connection cable 2) Cable model Connection diagram number	External cable	GOT model	Total distance *2	Number of connectable equipment
K200S	User preparing RS422 connection diagram 4)	G6L-CUEC	RS-422	User preparing RS422 connection diagram 2)	GT11H-C30-37P(3m) GT11H-C60-37P(6m) GT11H-C100-37P(10m)	GT14 Handy	13m	10 PLCs for 1 GOT

*1 Product manufactured by LS Industrial Systems Co., Ltd. For details of the product, contact LS Industrial Systems Co., Ltd.
*2 The distance from the GOT to the PLC (Connection cable 1) + Connection cable 2) + External cable)

(3) When using the external cable (GT11H-C□□□)

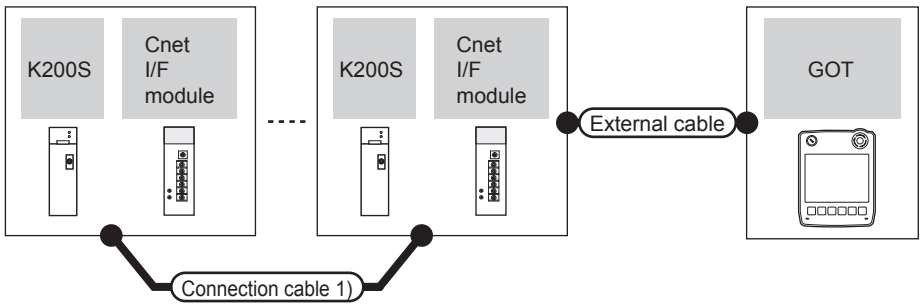

PLC	Connection cable 1)	Cnet I/F module*1		External cable	GOT model	Total distance *2	Number of connectable equipment
Series	Cable model Connection diagram number	Model	Communication type				
K200S	User preparing RS422 connection diagram 4)	G6L-CUEC	RS-422	GT11H-C30(3m) GT11H-C60(6m) GT11H-C100(10m) User preparing RS422 connection diagram 3)	GT14 Handy	13m	10 PLCs for 1 GOT

*1 Product manufactured by LS Industrial Systems Co., Ltd. For details of the product, contact LS Industrial Systems Co., Ltd.

*2 The distance from the GOT to the PLC (Connection cable 1) + External cable)

56.2.3 Connecting to K300S

■ When connecting to one PLC

Communication driver
LS Industrial Systems MASTER-K

(1) When using the connector conversion box

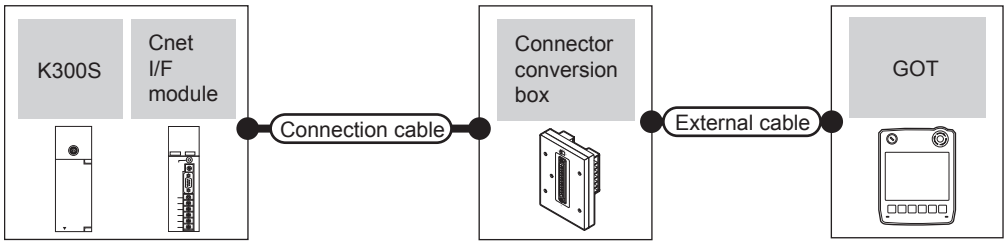

PLC			Connection cable	Connector conversion box	External cable	GOT model	Total distance	Number of connectable equipment
Series	Cnet I/F module*1	Communication type	Cable model Connection diagram number					
K300S	G4L-CUEA	RS-232	User preparing RS232 connection diagram 4)	GT11H-CNB-37S	GT11H-C30-37P(3m)	GT14 Handy	6m	1 PLC for 1 GOT

*1 Product manufactured by LS Industrial Systems Co., Ltd. For details of the product, contact LS Industrial Systems Co., Ltd.

(2) When using the external cable (GT11H-C□□□-37P)

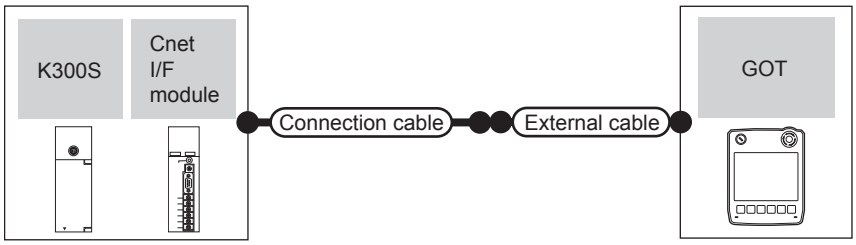

PLC			Connection cable	External cable	GOT model	Total distance	Number of connectable equipment
Series	Cnet I/F module*1	Communication type	Cable model Connection diagram number				
K300S	G4L-CUEA	RS-232	User preparing RS232 connection diagram 5)	GT11H-C30-37P(3m)	GT14 Handy	6m	1 PLC for 1 GOT

*1 Product manufactured by LS Industrial Systems Co., Ltd. For details of the product, contact LS Industrial Systems Co., Ltd.

(3) When using the external cable (GT11H-C□□□)

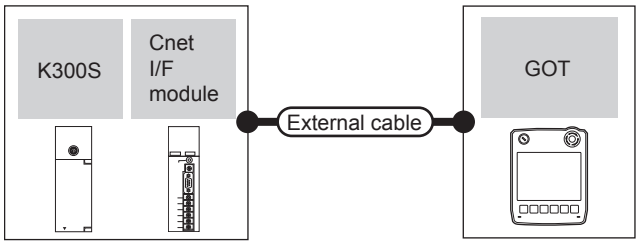

PLC			External cable	GOT model	Total distance	Number of connectable equipment
Series	Cnet I/F module*1	Communication type				
K300S	G4L-CUEA	RS-232	GT11H-C30(3m) GT11H-C60(6m) User preparing RS232 connection diagram 6)	GT14 Handy	6m	1 PLC for 1 GOT

*1 Product manufactured by LS Industrial Systems Co., Ltd. For details of the product, contact LS Industrial Systems Co., Ltd.

■ When connecting to multiple PLCs

(1) When using the connector conversion box

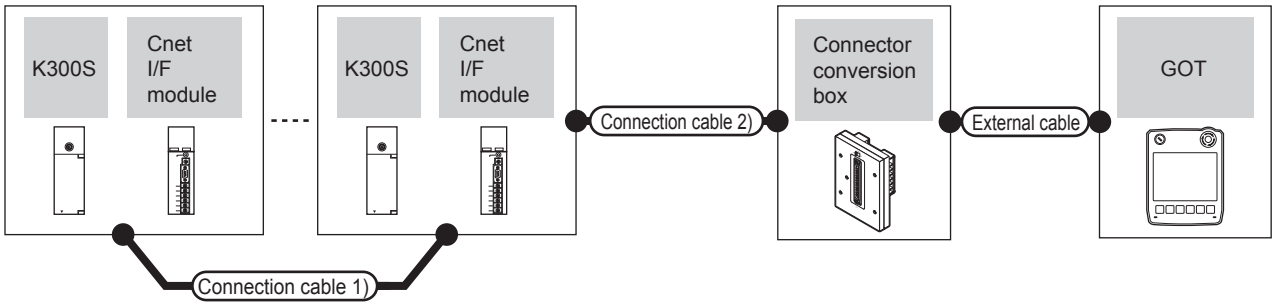

PLC	Connection cable 1)	Cnet I/F module*1		Connection cable 2)	Connector conversion box	External cable	GOT model	Total distance *2	Number of connectable equipment
Series	Cable model Connection diagram number	Cnet I/F module*1	Communication Type	Cable model Connection diagram number					
K300S	User preparing RS422 connection diagram 4)	G4L-CUEA	RS-422	User preparing RS422 connection diagram 1)	GT11H-CNB-37S	GT11H-C30-37P(3m) GT11H-C60-37P(6m) GT11H-C100-37P(10m)	GT14 Handy	13m	10 PLCs for 1 GOT

*1 Product manufactured by LS Industrial Systems Co., Ltd. For details of the product, contact LS Industrial Systems Co., Ltd.
*2 The distance from the GOT to the PLC (Connection cable 1) + Connection cable 2) + External cable)

(2) When using the external cable (GT11H-C□□□-37P)

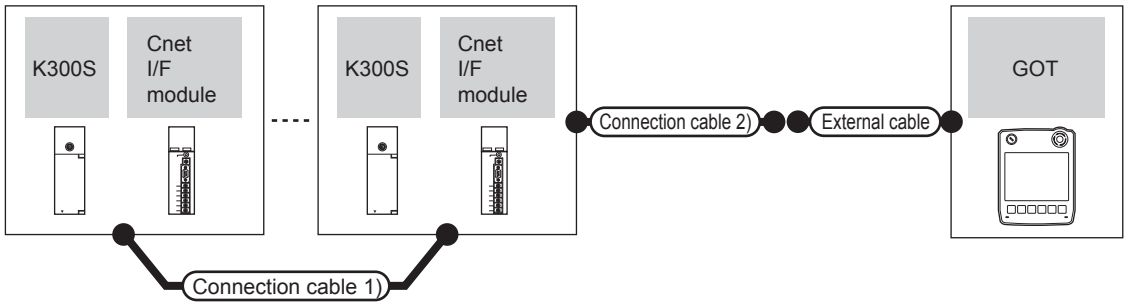

PLC	Connection cable 1)	Cnet I/F module*1		Connection cable 2)	External cable	GOT model	Total distance *2	Number of connectable equipment
Series	Cable model Connection diagram number	Cnet I/F module*1	Communication type	Cable model Connection diagram number				
K300S	User preparing RS422 connection diagram 4)	G4L-CUEA	RS-422	User preparing RS422 connection diagram 2)	GT11H-C30-37P(3m) GT11H-C60-37P(6m) GT11H-C100-37P(10m)	GT14 Handy	13m	10 PLCs for 1 GOT

*1 Product manufactured by LS Industrial Systems Co., Ltd. For details of the product, contact LS Industrial Systems Co., Ltd.
*2 The distance from the GOT to the PLC (Connection cable 1) + Connection cable 2) + External cable)

(3) When using the external cable (GT11H-C□□□)

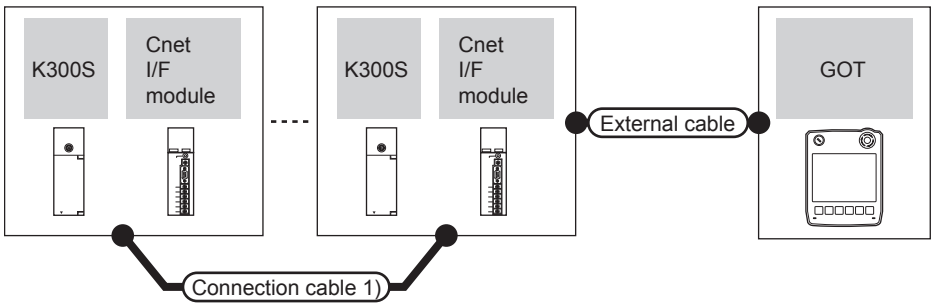

PLC	Connection cable 1)	Cnet I/F module*1		External cable	GOT model	Total distance *2	Number of connectable equipment
Series	Cable model Connection diagram number	Cnet I/F module*1	Communication type				
K300S	User preparing RS422 connection diagram 4)	G4L-CUEA	RS-422	GT11H-C30(3m) GT11H-C60(6m) GT11H-C100(10m) User preparing RS422 connection diagram 3)	GT14 Handy	13m	10 PLCs for 1 GOT

*1 Product manufactured by LS Industrial Systems Co., Ltd. For details of the product, contact LS Industrial Systems Co., Ltd.

*2 The distance from the GOT to the PLC (Connection cable 1) + External cable)

56.3 Connection Diagram

The following diagram shows the connection between the GOT and the PLC.

56.3.1 RS-232 cable

■ Connection diagram

RS232 connection diagram 1)

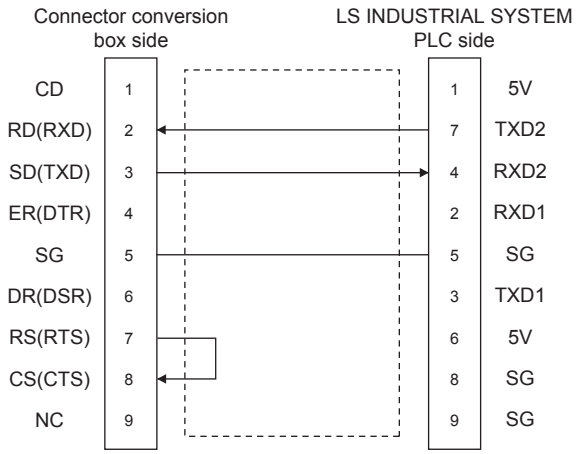

RS232 connection diagram 2)

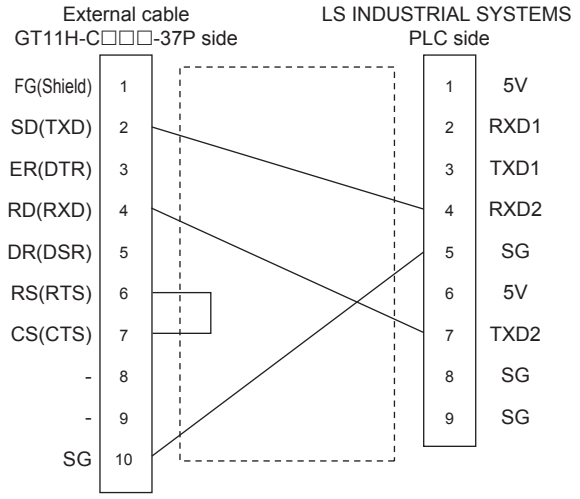

RS232 connection diagram 3)

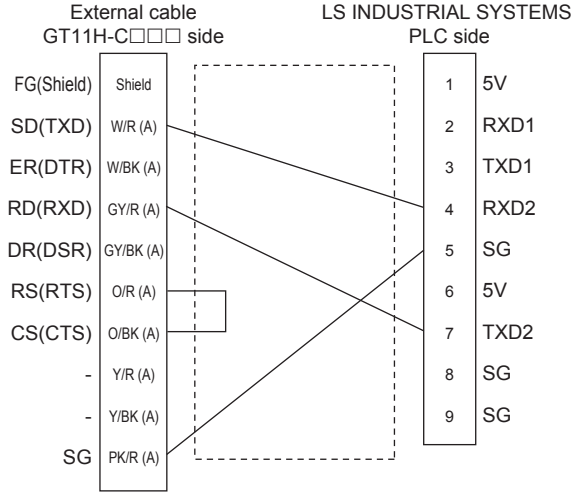

RS232 connection diagram 4)

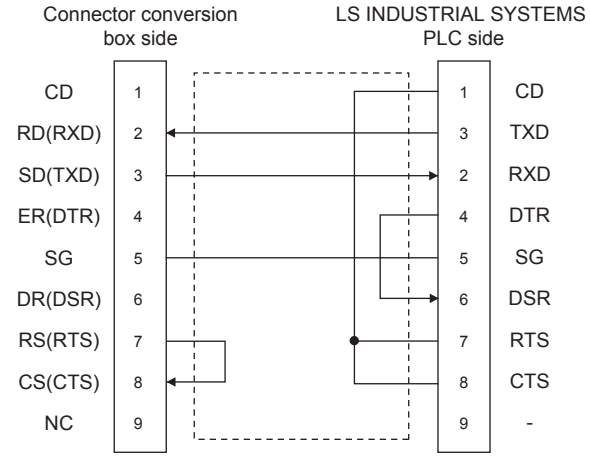

RS232 connection diagram 5)

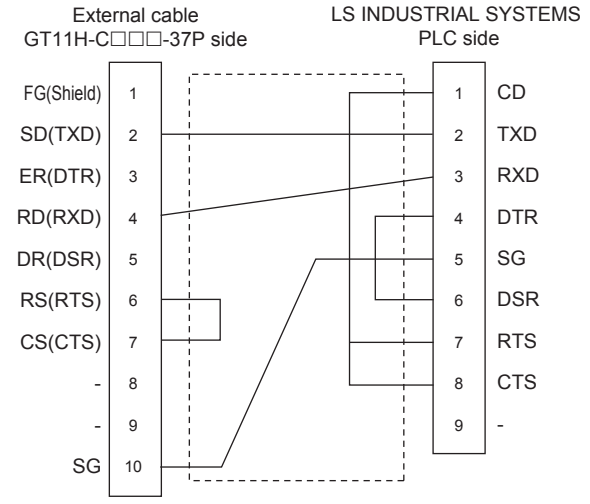

RS232 connection diagram 6)

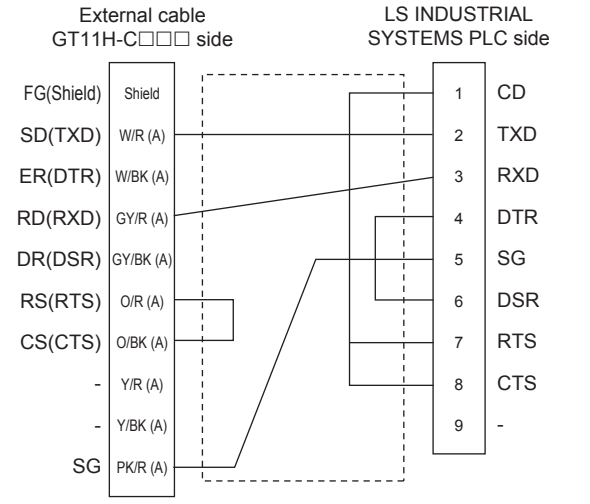

■ Precautions when preparing a cable

(1) Cable length
The total distance (between the GOT and a controller) of RS-232 cable must be 6m or less.

(2) Connector conversion box side connector
For the connector conversion box side connector, refer to the following.

☞ 6.6 Connector Conversion Box

(3) External cable side connector
For the connector specifications of the external cable side, refer to the following.

☞ 8.2 External Cable, Relay Cable

(4) LS INDUSTRIAL SYSTEMS PLC side connector
Use the connector compatible with the LS INDUSTRIAL SYSTEMS PLC side module.
For details, refer to the user's manual of the LS INDUSTRIAL SYSTEMS PLC.

56.3.2 RS-422 cable

■ Connection diagram

RS422 connection diagram 1)

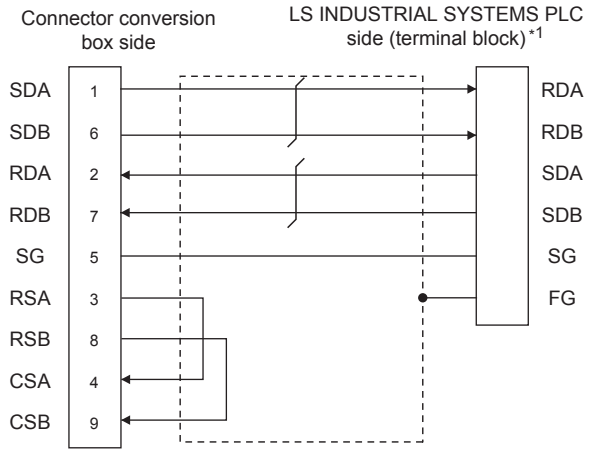

*1 For the system terminal, connect a 120Ω (1/2W) terminating resistor across RDA and RDB, and across SDA and SDB respectively.

RS422 connection diagram 2)

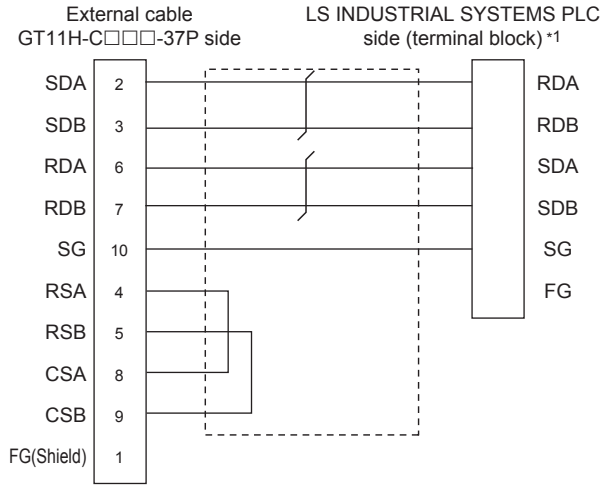

*1 For the system terminal, connect a 120Ω (1/2W) terminating resistor across RDA and RDB, and across SDA and SDB respectively.

RS422 connection diagram 3)

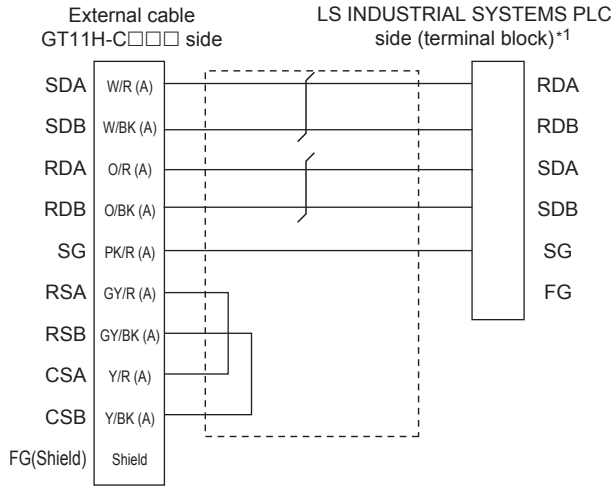

*1 For the system terminal, connect a 120Ω (1/2W) terminating resistor across RDA and RDB, and across SDA and SDB respectively.

RS422 connection diagram 4)

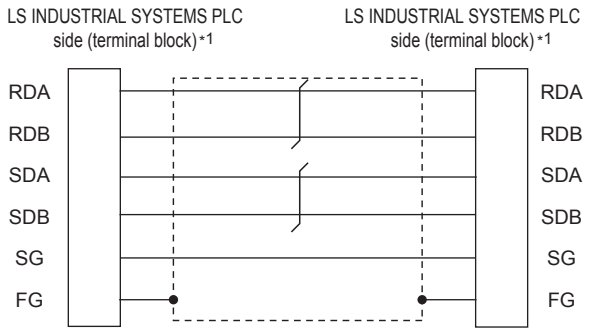

*1 For the system terminal, connect a 120Ω (1/2W) terminating resistor across RDA and RDB, and across SDA and SDB respectively.

■ Precautions when preparing a cable

(1) Cable length
The total distance (between GOT and controllers) of RS-422 cable must be 13m or less.

(2) Connector conversion box side connector
For the connector conversion box side connector, refer to the following.

☞ 6.6 Connector Conversion Box

(3) External cable side connector
For the connector specifications of the external cable side, refer to the following.

☞ 8.2 External Cable, Relay Cable

(4) LS INDUSTRIAL SYSTEMS PLC side connector
Use the connector compatible with the LS INDUSTRIAL SYSTEMS PLC side module.
For details, refer to the user's manual of the LS INDUSTRIAL SYSTEMS PLC.

■ Connecting terminating resistors

(1) LS INDUSTRIAL SYSTEMS PLC side
When connecting an LS INDUSTRIAL SYSTEMS PLC to the GOT, a terminating resistor must be connected.

☞ 56.3.2 RS-422 cable ■ Connection diagram

56.4 GOT Side Settings

56.4.1 Setting communication interface (Communication settings)

Set the channel of the connected equipment.

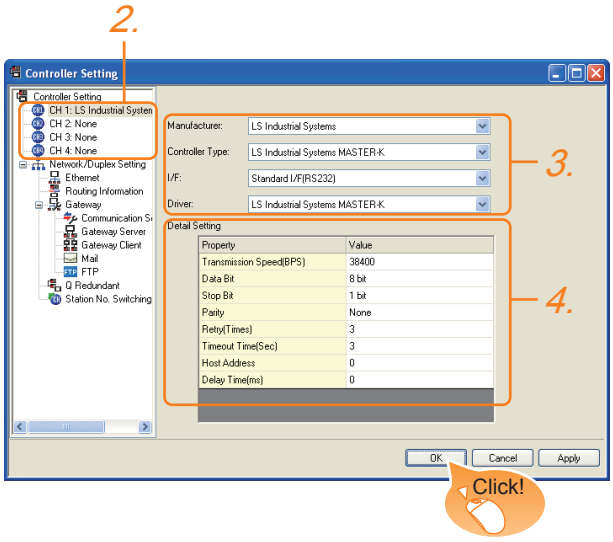

1. Select [Common] → [Controller Setting] from the menu.
2. The Controller Setting window is displayed. Select the channel to be used from the list menu.
3. Set the following items.
   - Manufacturer: LS Industrial Systems
   - Controller Type: LS Industrial Systems MASTER-K
   - I/F: Interface to be used
   - Driver: LS Industrial Systems MASTER-K
4. The detailed setting is displayed after Manufacturer, Controller Type, I/F, and Driver are set.
   Make the settings according to the usage environment.
   56.4.2 Communication detail settings

Click the [OK] button when settings are completed.

POINT

The settings of connecting equipment can be confirmed in [I/F Communication Setting].
For details, refer to the following.
18.1.2 I/F communication setting

56.4.2 Communication detail settings

Make the settings according to the usage environment.

Item	Description	Range
Transmission Speed	Set this item when change the transmission speed used for communication with the connected equipment. (Default: 38400bps)	9600bps, 19200bps, 38400bps, 57600bps, 115200bps
Data Bit	Set this item when change the data length used for communication with the connected equipment. (Default: 8bit)	7bit/8bit
Stop Bit	Specify the stop bit length for communications. (Default: 1bit)	1bit/2bits
Parity	Specify whether or not to perform a parity check, and how it is performed during communication. (Default: None)	None Even Odd
Retry	Set the number of retries to be performed when a communication error occurs. (Default: 3times)	0 to 5times
Timeout Time	Set the time period for a communication to time out. (Default: 3sec)	3 to 30sec
Host Address	Specify the host address (station No. of the PLC to which the GOT is connected) in the network of the GOT. (Default: 0)	0 to 31
Delay Time	Set this item to adjust the transmission timing of the communication request from the GOT. (Default: 0ms)	0 to 300 (ms)

POINT

(1) Communication interface setting by Utility
The communication interface setting can be changed on the Utility's [Communication setting] after writing [Communication Settings] of project data.
For details on the Utility, refer to the following manual.
11. COMMUNICATION INTERFACE SETTING (COMMUNICATION SETTING)

(2) Precedence in communication settings
When settings are made by GT Designer3 or the Utility, the latest setting is effective.

56.5 PLC Side Setting

POINT

LS INDUSTRIAL SYSTEMS PLC

For details of LS INDUSTRIAL SYSTEMS PLCs, refer to the following manual.

☞ User's Manual of the LS INDUSTRIAL SYSTEMS PLC

Model		Refer to
PLC CPU	K80S K120S	56.5.1
	K200S	
	K300S	
Cnet I/F module	G7L-CUEB	56.5.2
	G7L-CUEC	
Cnet I/F module	G6L-CUEB	
	G6L-CUEC	
	G4L-CUEA	

56.5.1 Connecting to PLC CPU

■ Settings of the communication specifications

There is no item to be set using the hardware.
Set the items using the engineering software for MASTER-K.
For the setting method of the engineering software, refer to the following.

☞ User's Manual of the LS INDUSTRIAL SYSTEMS PLC

Item	Settings
Station No.	0 to 31
Communication speed	1200, 2400, 4800, 9600, 19200, 38400, 57600bps
Data bit	7 or 8
Parity bit	None, Even, Odd
Stop bit	1 or 2

56.5.2 Connecting to Cnet I/F module

■ Settings of the communication specifications

There is no item to be set using the hardware.
Set the items using the engineering software for MASTER-K.
For the setting method of the engineering software, refer to the following.

☞ User's Manual of the LS INDUSTRIAL SYSTEMS PLC

Item		Settings
Communication protocol		Dedicated protocol
Communication format	Data bit	7 or 8
	Stop Bit	1 or 2
	Start bit	1
	Parity bit	Even/Odd/None
Channel selection		Stand-alone mode/Interlocking mode
Synchronization		Asynchronous
Transmission speed (bps)	RS-232C	300/600/1200/2400/4800/9600/19200/38400
	RS-422/485	300/600/1200/2400/4800/9600/19200/38400/76800

56.6 Device Range that Can Be Set

For details on the device range of controllers that can be used on GT14 Handy, refer to the following manuals.

☞ GT Designer3 Version1 Screen Design Manual (Fundamentals)

☞ GOT1000 Series Connection Manual (Non-Mitsubishi Products 2) for GT Works3

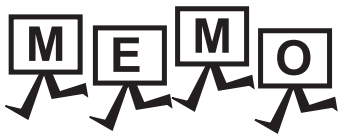
MEMO

57. CONNECTION TO SICK SAFETY CONTROLLER

57.1 Connectable Model List

The following table shows the connectable models.

Series	Model	Clock	Communication type	GT14 Handy	Refer to
Flexi Soft	FX3-CPU000000	×	RS-232	○	57.2.1
	FX3-CPU130002				
	FX3-CPU320002				

57.2 System Configuration

57.2.1 Connecting to Flexi Soft

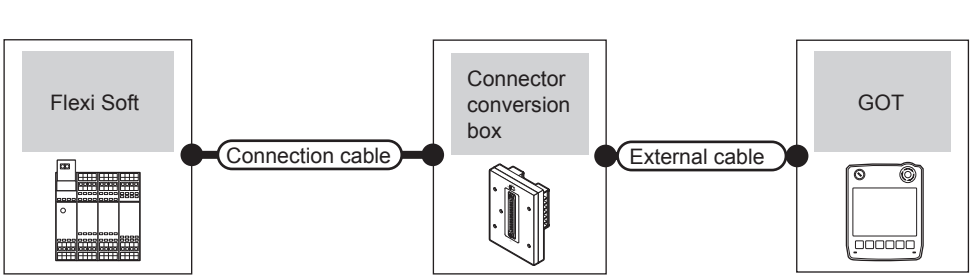

PLC		Connection cable	Connector conversion box	External cable	GOT model	Total distance	Number of connectable equipment
Series	Communication type	Cable model Connection diagram number					
Flexi Soft	RS-232	Part Number: 6021195(2m)*1 Part Number: 6036342(3m)*1	GT11H-CNB-37S	GT11H-C30-37P(3m)	GT14 Handy	6m	1 GOT for 1 PLC

*1 Product manufactured by SICK Inc. For details of the product, contact SICK Inc.

57.3 GOT Side Settings

57.3.1 Setting communication interface (Communication settings)

Set the channel of the connected equipment.

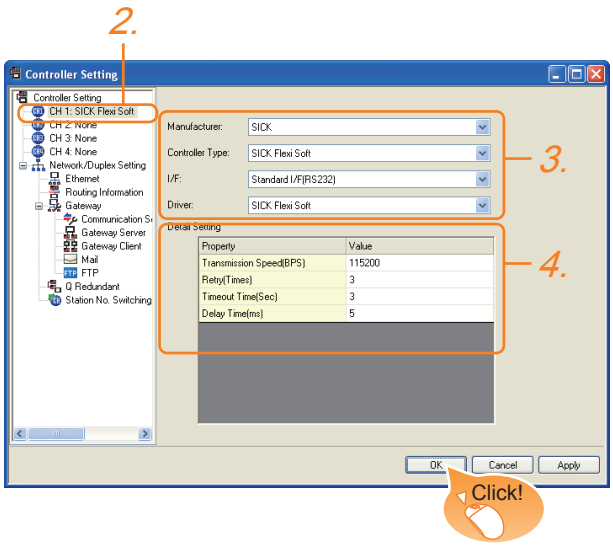

1. Select [Common] → [Controller Setting] from the menu.

2. The Controller Setting window is displayed. Select the channel to be used from the list menu.

3. Set the following items.
   - Manufacturer: SICK
   - Controller Type: SICK Flexi Soft
   - I/F: Interface to be used
   - Driver: SICK Flexi Soft

4. The detailed setting is displayed after Manufacturer, Controller Type, I/F, and Driver are set.
   Make the settings according to the usage environment.
   57.3.2 Communication detail settings

Click the OK button when settings are completed.

POINT

The settings of connecting equipment can be confirmed in [I/F Communication Setting].
For details, refer to the following.
18.1.2 I/F communication setting

57.3.2 Communication detail settings

Make the settings according to the usage environment.

(1) SICK Flexi Soft

Item	Description	Range
Transmission Speed	Set this item when change the transmission speed used for communication with the connected equipment. (Default: 115200bps)	9600bps, 19200bps, 38400bps, 57600bps, 115200bps
Retry	Set the number of retries to be performed when a communication error occurs. (Default: 3times)	0 to 5times
Timeout Time	Set the time period for a communication to time out. (Default: 3sec)	1 to 30sec
Delay Time	Set this item to adjust the transmission timing of the communication request from the GOT. (Default: 5ms)	0 to 300 (ms)

POINT

(1) Communication interface setting by Utility
The communication interface setting can be changed on the Utility's [Communication setting] after writing [Communication Settings] of project data.
For details on the Utility, refer to the following manual.
11. COMMUNICATION INTERFACE SETTING (COMMUNICATION SETTING)

(2) Precedence in communication settings
When settings are made by GT Designer3 or the Utility, the latest setting is effective.

57.4 PLC Side Setting

POINT

SICK PLC

For details of SICK PLCs, refer to the following manual.

☞ User's Manual of the SICK PLC

57.4.1 Connecting to Flexi Soft

■ Communication settings

Communication settings are not required, since the following contents are fixed.

Setting item	Controller Side Settings
Communication speed	115200bps (fixed)
Data bit	8bits (fixed)
Parity bit	None (fixed)
Stop bit	1bit (fixed)

57.5 Device Range that Can Be Set

For details on the device range of controllers that can be used on GT14 Handy, refer to the following manuals.

☞GT Designer3 Version1 Screen Design Manual (Fundamentals)

☞GOT1000 Series Connection Manual (Non-Mitsubishi Products 2) for GT Works3

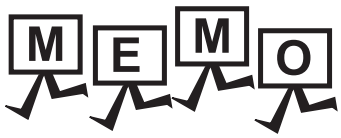
MEMO

58. CONNECTION TO SIEMENS PLC

58.1 Connectable Model List

The following table shows the connectable models.

Series	Clock	Communication type	Ethernet connection type	GT14 Handy	Refer to
SIMATIC S7-200	×	RS-232	-	○	58.2.2
		Ethernet	OP communication	○	58.3.2
SIMATIC S7-300	○*1	RS-232	-	○	58.2.1
		Ethernet	FETCH/WRITE	○	58.3.1
			OP communication	○	58.3.2
SIMATIC S7-400	○*1	RS-232	-	○	58.2.1
		Ethernet	FETCH/WRITE	○	58.3.1
			OP communication	○	58.3.2
SIMATIC S7-1200	×	Ethernet	OP communication	○	58.3.2

*1 These models cannot be used for the Ethernet connection.

58.2 Serial Connection

58.2.1 System configuration for connecting to SIMATIC S7-300/400 series

■ When connecting to one PLC

(1) When using the connector conversion box

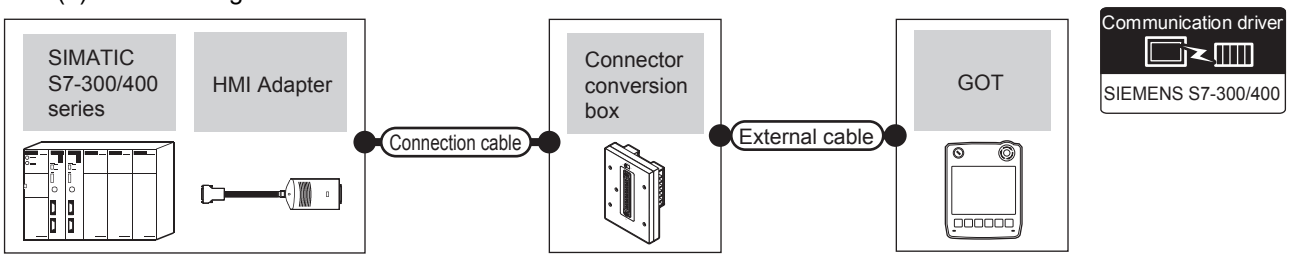

PLC			Connection cable	Connector conversion box	External cable	GOT model	Total distance	Number of connectable equipment
Series	HMI Adapter*1	Communication type	Cable model Connection diagram number					
SIMATIC S7-300/400	MLFB: 6ES7 972-0CA11-0XA0	RS-232	GT09-C30R20801-9S(3m) or (User preparing) RS232 connection diagram 1)	GT11H-CNB-37S	GT11H-C30-37P (3m)	GT14 Handy	6m	1 GOT for 1 HMI Adapter

*1 Product manufactured by Siemens AG. For details of this product, contact Siemens AG.

(2) When using the external cable (GT11H-C□□□-37P)

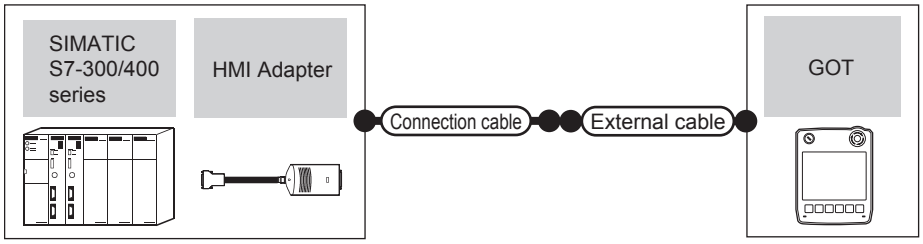

PLC			Connection cable	External cable	GOT model	Total distance	Number of connectable equipment
Series	HMI Adapter*1	Communication type	Cable model Connection diagram number				
SIMATIC S7-300/400	MLFB: 6ES7 972-0CA11-0XA0	RS-232	User preparing RS232 connection diagram 2)	GT11H-C30-37P(3m)	GT14 Handy	6m	1 GOT for 1 HMI Adapter

*1 Product manufactured by Siemens AG. For details of this product, contact Siemens AG.

(3) When using the external cable (GT11H-C□□□)

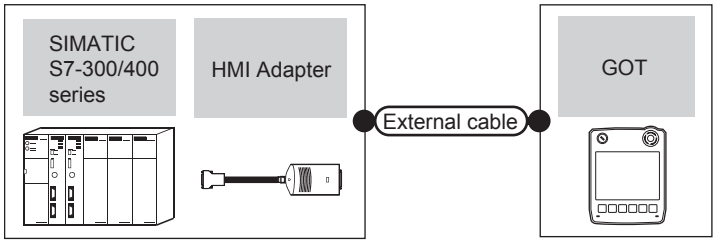

PLC			External cable	GOT model	Total distance	Number of connectable equipment
Series	HMI Adapter*1	Communication type				
SIMATIC S7-300/400	MLFB: 6ES7 972-0CA11-0XA0	RS-232	GT11H-C30(3m) GT11H-C60(6m) User preparing RS232 connection diagram 3)	GT14 Handy	6m	1 GOT for 1 HMI Adapter

*1 Product manufactured by Siemens AG. For details of this product, contact Siemens AG.

■ When connecting to multiple PLCs

(1) When using the connector conversion box

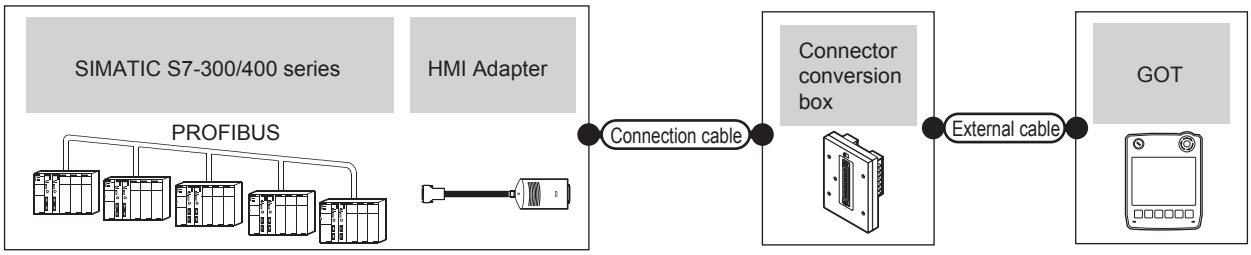

PLC			Connection cable	Connector conversion box	External cable	GOT model	Total distance *2	Number of connectable equipment
Series	HMI Adapter*1	Communication type	Cable model Connection diagram number					
SIMATIC S7-300/400	MLFB: 6ES7 972-0CA11-0XA0	RS-232	GT09-C30R20801-9S(3m) or User preparing RS232 connection diagram 1)	GT11H-CNB-37S	GT11H-C30-37P (3m)	GT14 Handy	6m	1 GOT for 1 HMI Adapter

*1 Product manufactured by Siemens AG. For details of this product, contact Siemens AG.
*2 The distance from the GOT to the HMI adapter (Connection cable + External connection cable)

(2) When using the external cable (GT11H-C□□□-37P)

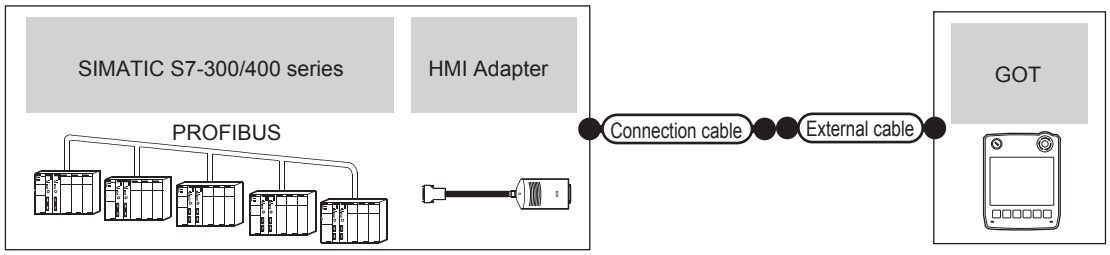

PLC			Connection cable	External cable	GOT model	Total distance *2	Number of connectable equipment
Series	HMI Adapter*1	Communication type	Cable model Connection diagram number				
SIMATIC S7-300/400	MLFB: 6ES7 972-0CA11-0XA0	RS-232	User preparing RS232 connection diagram 2)	GT11H-C30-37P(3m)	GT14 Handy	6m	1 GOT for 1 HMI Adapter

*1 Product manufactured by Siemens AG. For details of this product, contact Siemens AG.
*2 The distance from the GOT to the HMI adapter (Connection cable + External connection cable)

(3) When using the external cable (GT11H-C□□□)

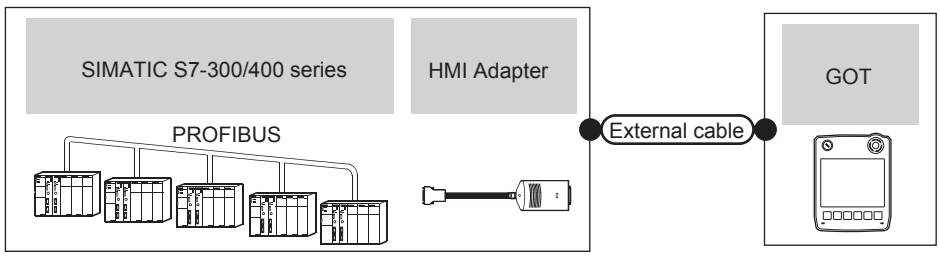

PLC			External cable	GOT model	Total distance*2	Number of connectable equipment
Series	HMI Adapter*1	Communication type				
SIMATIC S7-300/400	MLFB: 6ES7 972-0CA11-0XA0	RS-232	GT11H-C30(3m) GT11H-C60(6m) User preparing RS232 connection diagram 3)	GT14 Handy	6m	1 GOT for 1 HMI Adapter

*1 Product manufactured by Siemens AG. For details of this product, contact Siemens AG.
*2 The distance from the GOT to the HMI adapter (External connection cable)

58.2.2 System configuration for connecting to SIMATIC S7-200

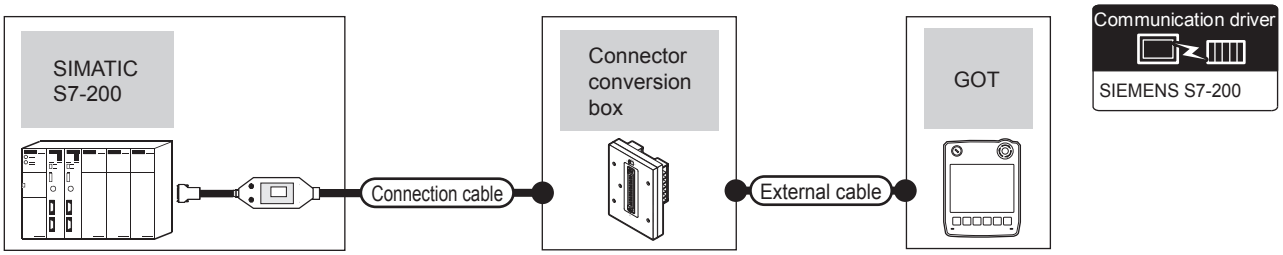

PLC		Connection cable	Connector conversion box	External cable	GOT model	Total distance	Number of connectable equipment
Series	Communication type	Cable model Connection diagram number					
SIMATIC S7-200	RS-232	6ES7 901-3BF20-0XA0*1 6ES7 901-3CB30-0XA0*1	GT11H-CNB-37S	GT11H-C30-37P(3m)	GT14 Handy	6m	1 GOT for 1 PLC

*1 Product manufactured by Siemens AG. For details of this product, contact Siemens AG.

58.2.3 Connection diagram

The following diagram shows the connection between the GOT and the PLC.

■ RS-232 cable

(1) Connection diagram

RS232 connection diagram 1)

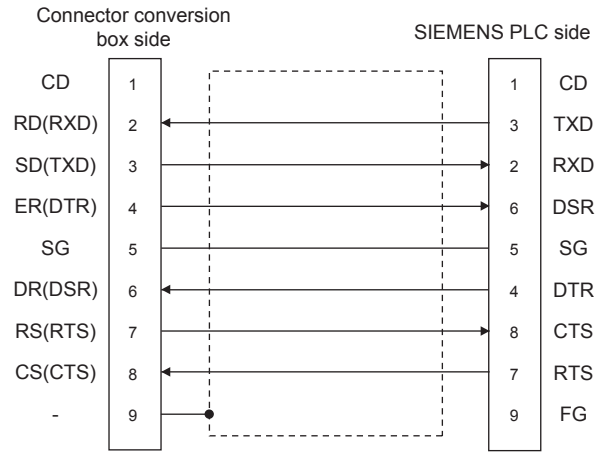

RS232 connection diagram 2)

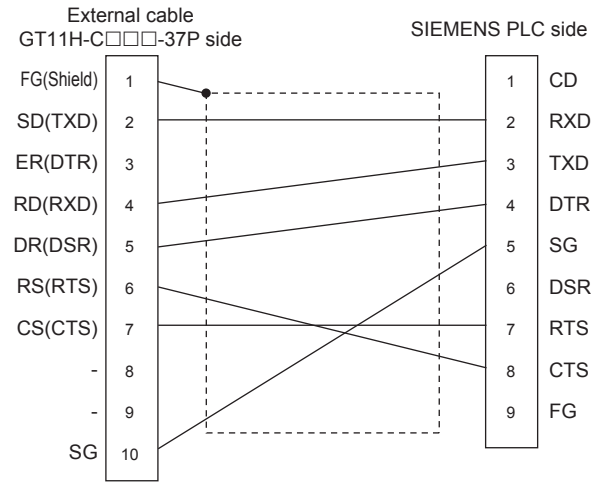

RS232 connection diagram 3)

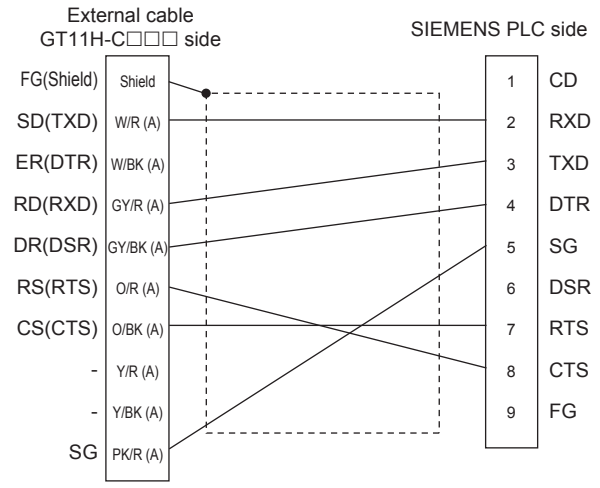

(2) Precautions when preparing a cable

(a) Cable length
The total distance (between the GOT and a controller) of RS-232 cable must be 6m or less.

(b) Connector conversion box side connector
For the connector conversion box side connector, refer to the following.

☞ 6.6 Connector Conversion Box

(c) External cable side connector
For the connector specifications of the external cable side, refer to the following.

☞ 8.2 External Cable, Relay Cable

(d) SIEMENS PLC side connector
Use the connector compatible with the SIEMENS PLC side.
For details, refer to the SIEMENS PLC user's manual.

58.2.4 GOT side settings

■ Setting communication interface (Communication settings)

Set the channel of the connected equipment.

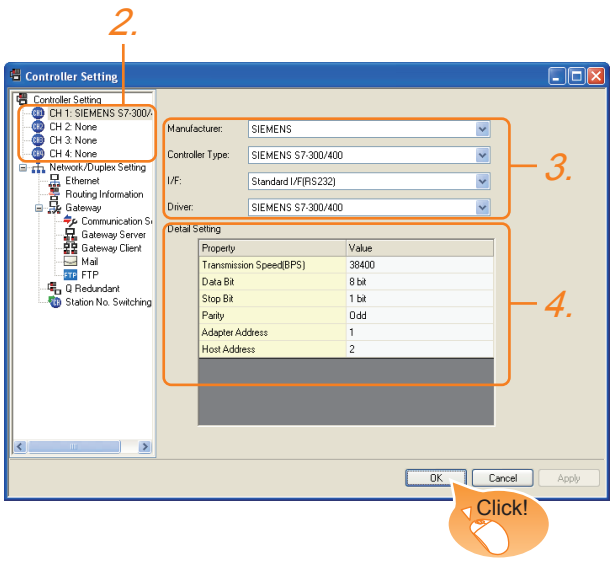

1. Select [Common] → [Controller Setting] from the menu.
2. The Controller Setting window is displayed. Select the channel to be used from the list menu.
3. Set the following items.
   - Manufacturer: SIEMENS
   - Controller Type: Set either of the followings.
     - SIEMENS S7-300/400 Series
     - S7-200
   - I/F: Interface to be used
   - Driver: Set either of the followings.
     - When connecting to SIEMENS S7-300/400: SIEMENS S7-300/400
     - When connectiong to SIEMENS S7-200: SIEMENS S7-200
4. The detailed setting is displayed after Manufacturer, Controller Type, I/F, and Driver are set.
   Make the settings according to the usage environment.

   58.2.4 ■ Communication detail settings

Click the OK button when settings are completed.

POINT

The settings of connecting equipment can be confirmed in [I/F Communication Setting].
For details, refer to the following.

18.1.2 I/F communication setting

■ Communication detail settings

Make the settings according to the usage environment.

(1) SIEMENS S7-300/400

Item	Description	Range
Transmission Speed*2	Set this item when change the transmission speed used for communication with the connected equipment. (Default: 38400bps)	9600bps, 19200bps, 38400bps
Data Bit	Set this item when change the data length used for communication with the connected equipment. (Default: 8bit)	8bit (fixed)
Stop Bit	Specify the stop bit length for communications. (Default: 1bit)	1bit (fixed)
Parity	Specify whether or not to perform a parity check, and how it is performed during communication. (Default: Odd)	Odd (fixed)
Adapter Address*1*2	Specify the adapter address (station No. of the adapter to which the GOT is connected) in the connected network. (Default: 1)	1 to 31
Host Address *1*2	Specify the host address (station No. of the PLC that the GOT will monitor) in the network of the GOT. (Default: 2)	1 to 31

*1 Set the address without overlapping the address of other units.
*2 The GOT automatically sets the values of Transmission Speed, Adapter Address, and Host Address to the HMI Adapter.

(2) SIEMENS S7-200

Item	Description	Range
Transmission Speed	Set this item when change the transmission speed used for communication with the connected equipment. (Default: 19200bps)	9600bps, 19200bps, 38400bps, 57600bps, 115200bps
Data Bit	Set this item when change the data length used for communication with the connected equipment. (Default: 8bit)	7bit/8bit
Stop Bit	Specify the stop bit length for communications. (Default: 1bit)	1bit/2bits
Parity	Specify whether or not to perform a parity check, and how it is performed during communication. (Default: Even)	None Even Odd
Adapter Address	Specify the adapter address (station No. of the adapter to which the GOT is connected) in the connected network. (Default: 0)	0 to 31
Host Address	Specify the host address (station No. of the PLC that the GOT will monitor) in the network of the GOT. (Default: 2)	1 to 31

POINT

(1) Communication interface setting by Utility
The communication interface setting can be changed on the Utility's [Communication setting] after writing [Communication Settings] of project data.
For details on the Utility, refer to the following manual.

11. COMMUNICATION INTERFACE SETTING (COMMUNICATION SETTING)

(2) Precedence in communication settings
When settings are made by GT Designer3 or the Utility, the latest setting is effective.

58.2.5 PLC side setting

POINT

SIEMENS PLC
For details of SIEMENS PLCs, refer to the following manuals.

SIEMENS PLC user's Manual

Model		Refer to
PLC CPU	S7-200	■ Connecting to SIMATIC S7-200
HMI Adapter	6ES7 972-0CA11-0XA0	■ Connecting to HMI Adapter
PC/PPI cable	6ES7 901-3BF20-0XA0 6ES7 901-3CB30-0XA0	■ Connecting to SIMATIC S7-200

■ Connecting to HMI Adapter

(1) Communication settings
The following communication settings are made at the communication detail settings of the GOT side. For details, refer to the following.

58.2.4 ■ Communication detail settings

Setting item	PLC side setting
Transmission speed	9600bps, 19200bps, 38400bps
Data bit	8bits (Fixed)
Parity bit	Odd (fixed)
Stop bit	1bit (Fixed)
Adapter address	1 to 31
Host address	1 to 31

■ Connecting to SIMATIC S7-200

(1) Communication settings
Set the communication settings of PLC and PC/PPI cable.

(a) PLC settings
Set the communication settings of PLC by operating the SIEMENS programming tool(STEP7-Micro/WIN32).

Setting item	PLC side setting
Transmission speed*1	9600bps, 19200bps
Data bit	8bits (Fixed)
Parity bit	Even (fixed)
Stop bit	1bit (Fixed)
Host address*2	1 to 31

*1 Adjust the settings with GOT settings.
*2 Set the address without overlapping the address of other units.

(b) PC/PPI cable settings
Set the transmission speed by operating the DIP switch on the PC/PPI cable.

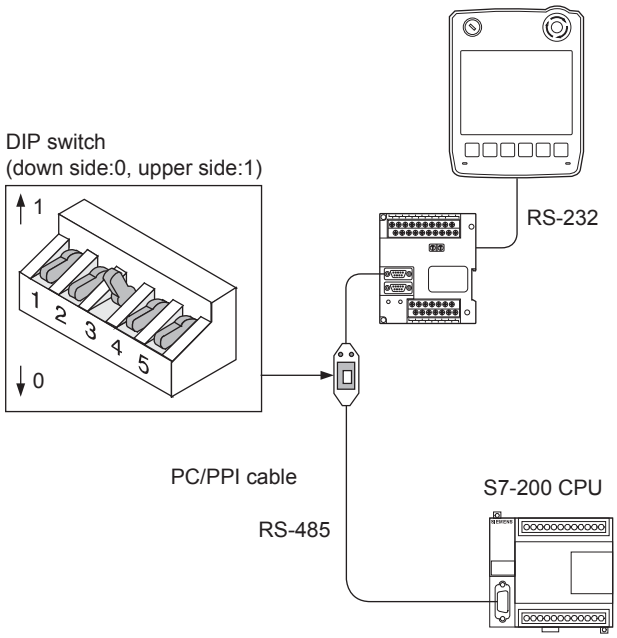

SWITCH1	SWITCH2	SWITCH3	SWITCH4	SWITCH5	Transmission speed
0	0	1	0	0	19200bps*1
0	1	0	0	0	9600bps*1

*1 Adjust with GOT and PLC settings.

58.2.6 Precautions

■ GOT alarm list (system alarm) function

Error information cannot be monitored when the GOT is connected to a SIEMENS PLC.
(The error information on the PLC CPU side can be monitored.)
For details on the alarm list (system alarm), refer to the following manual:

☞ GT Designer3 Version1 Screen Design Manual

■ At system startup

(1) When powering ON the system
Turn ON all PLC CPUs before turning ON the GOT.
If the GOT is turned ON before power-up of the PLC CPUs, restart the GOT.

(2) When powering OFF a PLC CPU at another station
When a PLC CPU at another station (the PLC CPU to which the HMI Adapter is not connected) is turned OFF, monitoring by the GOT is stopped.
To resume the monitoring, restart the GOT.
(Monitoring will not be resumed on GOT even if the PLC CPU is turned ON again.)

58.3 Ethernet Connection

58.3.1 System configuration for connecting to SIMATIC S7-300/400 series (Ethernet connection type: FETCH/WRITE)

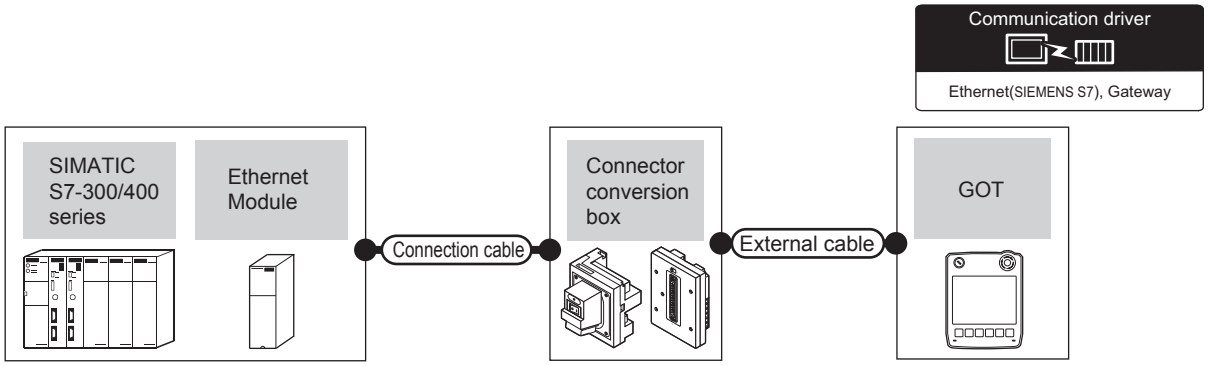

PLC		Connection cable*1	Connector conversion box	External cable*5	GOT model	Maximum segment length	Number of connectable equipment
Series	Ethernet module*3	Cable model					
SIMATIC S7-300	CP343-1 IT CP343-1 CP343-1 Lean CP343-1 Advanced	• 10BASE-T Shielded twisted pair cable (STP) or Unshielded twisted pair cable (UTP) Category 3, 4, and 5 • 100BASE-TX Shielded twisted pair cable (STP) Category 5 and 5e	GT16H-CNB-42S	GT14H-C30-42P (3m) GT14H-C60-42P (6m) GT14H-C100-42P(10m)	GT14 Handy	100m*2	When PLC:GOT is N:1 The following shows the number of PLCs for 1 GOT 16 or less When PLC:GOT is 1:N The following shows the number of GOTs for 1 PLC 32 or less*4 (recommended to 16 units or less)
			GT16H-CNB-37S	GT11H-C30-37P (3m) GT11H-C60-37P (6m) GT11H-C100-37P(10m)			
SIMATIC S7-400	CP443-1 IT CP443-1		GT16H-CNB-42S	GT14H-C30-42P (3m) GT14H-C60-42P (6m) GT14H-C100-42P(10m)			
			GT16H-CNB-37S	GT11H-C30-37P (3m) GT11H-C60-37P (6m) GT11H-C100-37P(10m)			

*1 The destination connected with the twisted pair cable varies with the configuration of the applicable Ethernet network system.
Connect to the Ethernet module, hub, transceiver or other system equipment corresponding to the applicable Ethernet network system.
Use cables, connectors, and hubs that meet the IEEE802.3 10BASE-T/100BASE-TX standard.
The use of shielded twisted pair cable (STP) is recommended in environments in which the performance against noise is required.

*2 A length between a hub and a node.
The maximum distance differs depending on the Ethernet device to be used.
The following shows the number of the connectable nodes when a repeater hub is used.
- 10BASE-T: Max. 4 nodes for a cascade connection (500m)
- 100BASE-TX: Max. 2 nodes for a cascade connection (205m)

When switching hubs are used, the cascade connection between the switching hubs has no logical limit for the number of cascades.
For the limit, contact the switching hub manufacturer.

*3 Product manufactured by Siemens AG. For details of this product, contact Siemens AG.

*4 If the number of GOTs increases, the communication becomes high-loaded, and it may affect the communication performance.

*5 Use C or later version of GT11H-C□□-37P.

58.3.2 System configuration for connecting to SIMATIC S7-200/300/400/1200 (Ethernet connection type: OP communication)

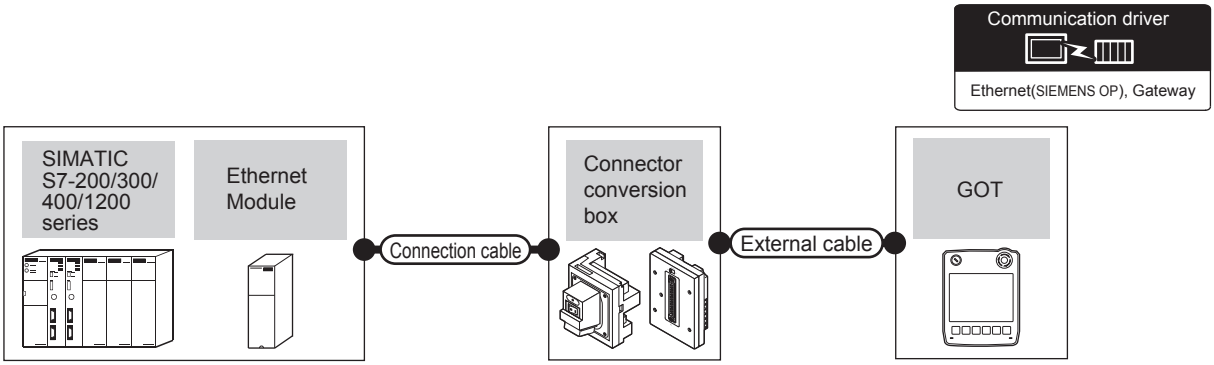

PLC		Connection cable[*1]	Connector conversion box	External cable[*5]	GOT model	Maximum segment length	Number of connectable equipment
Series	Ethernet module[*3]	Cable model					
SIMATIC S7-200	CP 243-1 CP 243-1 IT	• 10BASE-T Shielded twisted pair cable (STP) or Unshielded twisted pair cable (UTP) Category 3, 4, and 5 • 100BASE-TX Shielded twisted pair cable (STP) Category 5 and 5e	GT16H-CNB-42S	GT14H-C30-42P (3m) GT14H-C60-42P (6m) GT14H-C100-42P(10m)	GT14 Handy	100m[*2]	When PLC:GOT is N:1 The following shows the number of PLCs for 1 GOT 128 or less When PLC:GOT is 1:N The following shows the number of GOTs for 1 PLC 32 or less[*4] (recommended to 16 units or less)
			GT16H-CNB-37S	GT11H-C30-37P (3m) GT11H-C60-37P (6m) GT11H-C100-37P(10m)			
SIMATIC S7-300	CP 343-1 CP 343-1 Lean CP 343-1 Advanced-IT ACCON-NetLink-PRO compact		GT16H-CNB-42S	GT14H-C30-42P (3m) GT14H-C60-42P (6m) GT14H-C100-42P(10m)			
			GT16H-CNB-37S	GT11H-C30-37P (3m) GT11H-C60-37P (6m) GT11H-C100-37P(10m)			
	- (Built into GOT)		GT16H-CNB-42S	GT14H-C30-42P (3m) GT14H-C60-42P (6m) GT14H-C100-42P(10m)			
			GT16H-CNB-37S	GT11H-C30-37P (3m) GT11H-C60-37P (6m) GT11H-C100-37P(10m)			
SIMATIC S7-400	CP 443-1 CP 443-1 Advanced-IT ACCON-NetLink-PRO compact		GT16H-CNB-42S	GT14H-C30-42P (3m) GT14H-C60-42P (6m) GT14H-C100-42P(10m)			
			GT16H-CNB-37S	GT11H-C30-37P (3m) GT11H-C60-37P (6m) GT11H-C100-37P(10m)			
	- (Built into GOT)		GT16H-CNB-42S	GT14H-C30-42P (3m) GT14H-C60-42P (6m) GT14H-C100-42P(10m)			
			GT16H-CNB-37S	GT11H-C30-37P (3m) GT11H-C60-37P (6m) GT11H-C100-37P(10m)			
SIMATIC S7-1200	- (Built into GOT)		GT16H-CNB-42S	GT14H-C30-42P (3m) GT14H-C60-42P (6m) GT14H-C100-42P(10m)			
			GT16H-CNB-37S	GT11H-C30-37P (3m) GT11H-C60-37P (6m) GT11H-C100-37P(10m)			

*1 The destination connected with the twisted pair cable varies with the configuration of the applicable Ethernet network system.
Connect to the Ethernet module, hub, transceiver or other system equipment corresponding to the applicable Ethernet network system.
Use cables, connectors, and hubs that meet the IEEE802.3 10BASE-T/100BASE-TX standard.
The use of shielded twisted pair cable (STP) is recommended in environments in which the performance against noise is required.

*2 A length between a hub and a node.
The maximum distance differs depending on the Ethernet device to be used.

The following shows the number of the connectable nodes when a repeater hub is used.

- 10BASE-T: Max. 4 nodes for a cascade connection (500m)
- 100BASE-TX: Max. 2 nodes for a cascade connection (205m)

When switching hubs are used, the cascade connection between the switching hubs has no logical limit for the number of cascades.
For the limit, contact the switching hub manufacturer.

*3 Product manufactured by Siemens AG. For details of this product, contact Siemens AG.

*4 If the number of GOTs increases, the communication becomes high-loaded, and it may affect the communication performance.

*5 Use C or later version of GT11H-C□□-37P.

58.3.3 GOT side settings

■ Setting communication interface (Communication settings)

Set the channel of the connected equipment.

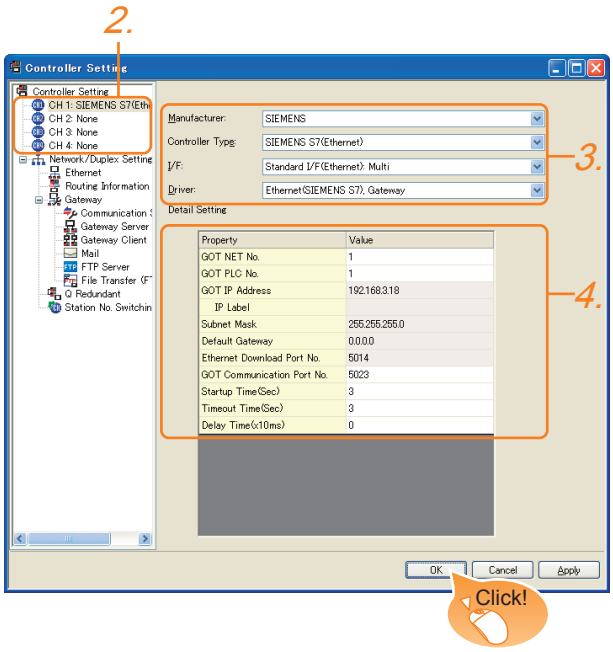

1. Select [Common] → [Controller Setting] from the menu.
2. The Controller Setting window is displayed. Select the channel to be used from the list menu.
3. Set the following items.
   - Manufacturer: SIEMENS
   - Controller Type: Depends on Ethernet connection type.
     FETCH/WRITE: SIEMENS S7 (Ethernet)
     OP communication: SIEMENS OP (Ethernet)
   - I/F: Interface to be used
   - Driver: Depends on Ethernet connection type.
     FETCH/WRITE: Ethernet (SIEMENS S7), Gateway
     OP communication: Ethernet (SIEMENS OP), Gateway
4. The detailed setting is displayed after Manufacturer, Controller Type, I/F, and Driver are set.
   Make the settings according to the usage environment.
   58.3.3 ■ Communication detail settings

Click the OK button when settings are completed.

POINT

The settings of connecting equipment can be confirmed in [I/F Communication Setting].
For details, refer to the following.
18.1.2 I/F communication setting

■ Communication detail settings

Make the settings according to the usage environment.

Item	Description	Range
GOT NET No.	Set the network No. of the GOT. (Default: 1)	1 to 239
GOT PLC No.*2	Set the station No. of the GOT. (Default: 1)	1 to 254
GOT IP Address*1	Set the IP address of the GOT. (Default: 192.168.3.18)	0.0.0.0 to 255.255.255.255
Subnet Mask*1	Set the subnet mask for the sub network. (Only for connection via router) If the sub network is not used, the default value is set. (Default: 255.255.255.0)	0.0.0.0 to 255.255.255.255
Default Gateway*1	Set the router address of the default gateway where the GOT is connected. (Only for connection via router) (Default: 0.0.0.0)	0.0.0.0 to 255.255.255.255
Ethernet Download Port No.*1	Set the GOT port No. for Ethernet download. (Default: 5014)	1024 to 5010, 5014 to 65534 (Except for 5011, 5012, 5013, and 49153)
GOT Communication Port No.	Set the GOT port No. for the connection with the Ethernet module. (Default) Ethernet(SIEMENS S7), Gateway: 5023 Ethernet(SIEMENS OP), Gateway: 5024	1024 to 5010, 5014 to 65534 (Except for 5011, 5012, 5013, and 49153)
Startup Time	Specify the time period from the GOT startup until GOT starts the communication with the PLC CPU. (Default: 3sec)	3 to 255sec
Timeout Time	Set the time period for a communication to time out. (Default: 3sec)	3 to 90sec
Delay Time	Set the delay time for reducing the load of the network/destination PLC. (Default: 0ms)	0 to 10000 (× 10 ms)

*1 Click the Setting button and perform the setting in the [GOT IP Address Setting] screen.

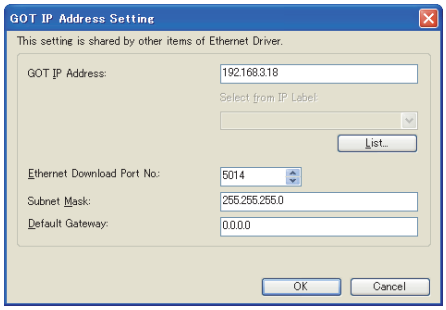

*2 Each of [GOT PLC No.] set in the communication detail setting and [PLC No.] set in the Ethernet setting must be set to different station numbers.
58.3.3 ■ Ethernet setting

■ Ethernet setting

(1) Ethernet connection type: FETCH/WRITE

This section describes the Ethernet setting for the communication driver SIEMENS S7 (Ethernet).

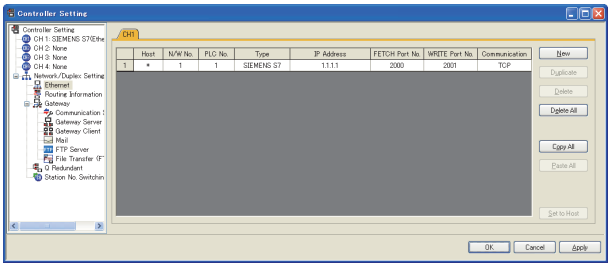

Item	Description	Set value
Host	The host is displayed. (The host is indicated with an asterisk (*).)	-
N/W No.	Set the network No. of the connected Ethernet module. (Default: 1)	1 to 239
PLC No.*1	Set the station No. of the connected Ethernet module. (Default: blank)	1 to 64
Controller Type	SIEMENS S7 (fixed)	SIEMENS S7 (fixed)
IP Address	Set the IP address of the connected Ethernet module. (Default: blank)	PLC side IP address
FETCH Port No.	Set the FETCH port No. of the connected Ethernet module. (Default: 2000)	1024 to 65534
WRITE Port No.	Set the WRITE port No. of the connected Ethernet module. The value that the FETCH port No. is incremented by one is set automatically. (Default: 2001)	1025 to 65535
Communication	Select a communication protocol. (Default: TCP)	TCP (fixed)

*1 Each of [GOT PLC No.] set in the communication detail setting and [PLC No.] set in the Ethernet setting must be set to different station numbers.

58.3.3 ■ Communication detail settings

(2) Ethernet connection type: OP communication

This section describes the Ethernet setting for the communication driver SIEMENS OP (Ethernet).

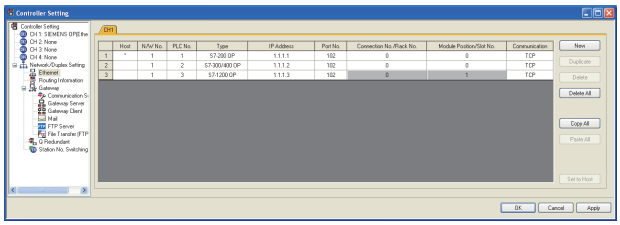

Item	Description	Set value
Host	The host is displayed. (The host is indicated with an asterisk (*).)	-
N/W No.	Set the network No. of the connected Ethernet module. (Default: blank)	1 to 239
PLC No.*2	Set the station No. of the connected Ethernet module. (Default: blank)	1 to 254
Controller Type	Set the PLC type to be connected.	S7-200 OP S7-300/400 OP S7-1200 OP
IP Address	Set the IP address of the connected Ethernet module. (Default: blank)	PLC side IP address
Port No.	102 (fixed)	102 (fixed)
Connection No./ Rack No.*1	Set the Connection No./Rack No. set on the PLC side. (Default: 0)	0 to 7
Module Position/ Slot No.*1	Set the Module Position/Slot No. set on the PLC side. (Default) S7-200 OP: 0 S7-300/400 OP: 2	S7-200 OP: 0 to 6 S7-300/400 OP: 0 to 31
Communication	TCP (fixed)	TCP (fixed)

*1 Connection No./Rack No. and Module Position/Slot No. are unnecessary for S7-1200 OP.

*2 Each of [GOT PLC No.] set in the communication detail setting and [PLC No.] set in the Ethernet setting must be set to different station numbers.

58.3.3 ■ Communication detail settings

POINT

(1) Communication interface setting by Utility

The communication interface setting can be changed on the Utility's [Communication setting] after writing [Communication Settings] of project data.

For details on the Utility, refer to the following manual.

11. COMMUNICATION INTERFACE SETTING (COMMUNICATION SETTING)

(2) Precedence in communication settings

When settings are made by GT Designer3 or the Utility, the latest setting is effective.

58.3.4 PLC side setting

POINT

SIEMENS PLC

For details of SIEMENS PLCs, refer to the following manuals.

☞ SIEMENS PLC user's Manual

■ Parameter setting

Set the following parameters with the SIEMENS software package.

(1) Ethernet connection type: FETCH/WRITE

(a) Settings of IP address and subnet mask

Item		Settings
Parameters	IP Address	PLC side IP address
	Subnet mask	PLC side subnet mask

(b) Fetch port setting

Item			Settings
Option	Mode	Select [Fetch passive].	
Addresses	IP(dec)	Local	PLC side IP address
		Remote	GOT side IP address
	PORT (dec)	Local	PLC side port No.
		Remote	GOT side port No.

(c) Write port setting

Item			Settings
Option	Mode	Select [Write passive].	
Addresses	IP(dec)	Local	PLC side IP address
		Remote	GOT side IP address
	PORT (dec)	Local	PLC side port No.
		Remote	GOT side port No.

(d) Precautions for setting

The Keep Alive function of the Siemens CP Module is not supported.

Specify 0 for [Keep Alive].

(2) Ethernet connection type: OP communication

(a) S7-200

Set the following parameters.

Item	Settings	
Module Position	Value in [Position] of the Ethernet module	
Module Address	IP Address	PLC side IP address
	Subnet mask	PLC side subnet mask
Number of connections to configure for this module	Set "1" as the number of connected GOT.	
This is a Server connection: Servers respond to connection request from remote clients.	Mark the check box.	
Local Properties (Server)	Select [Accept all connection requests].	
Remote Properties (Client)	Set "10.00" in [TSAP].	
Enable the Keep Alive function for this connection.	Unmark the check box.	

(b) S7-300/400

Set the following parameters.

• When using an Ethernet module

Item	Settings	
Properties	IP Address	PLC side IP address
	Subnet mask	PLC side subnet mask

• When using a built-in Ethernet port

Item	Settings	
Device name	Set [PN-IO].	
Properties	IP Address	PLC side IP address
	Subnet mask	PLC side subnet mask

(c) S7-1200

Set the following parameters.

Item	Settings	
Ethernet addresses	IP Address	PLC side IP address
	Subnet mask	PLC side subnet mask

(d) ACCON-NetLink-PRO compact

Set the following parameters.

Item	Settings	
Properties	IP Address	PLC side IP address
	Subnet mask	PLC side subnet mask

58.3.5 Precautions

■ When connecting to multiple GOTs

(1) Setting PLC No.
When connecting two or more GOTs in the Ethernet network, set each [PLC No.] to the GOT.

☞ ■ Ethernet setting

(2) Setting IP address
Do not use the IP address "192.168.0.18" when using multiple GOTs.
A communication error may occur on the GOT with the IP address.

■ When setting IP address

Do not use "0" and "255" at the end of an IP address. (Numbers of *.*.*.0 and *.*.*.255 are used by the system.)
The GOT may not monitor the controller correctly with the above numbers.
Consult with the administrator of the network before setting an IP address to the GOT and controller.

■ When connecting to the multiple network equipment (including GOT) in a segment

By increasing the network load, the transmission speed between the GOT and PLC may be reduced.
The following actions may improve the communication performance.

- Using a switching hub
- More high speed by 100BASE-TX (100Mbps)
- Reduction of the monitoring points on GOT

■ When monitoring a nonexistent or turned-off station

If a time-out occurs with the initial communication by monitoring a nonexistent or turned-off station, the time-out can delay the communication with the normally operating station.

■ Timing to start GOT communication

After the PLC starts up, start the GOT communication. When the GOT starts communication before the PLC starts up, a communication timeout occurs.

■ Operations during communication

During normal communication, any operation which makes the GOT restart (including writing a project and changing utility data)may display the system alarm, "402 Communication timeout. Confirm communication pathway or modules.", when the GOT restarts.

58.4 Device Range that Can Be Set

For details on the device range of controllers that can be used on GT14 Handy, refer to the following manuals.

☞ GT Designer3 Version1 Screen Design Manual (Fundamentals)

☞ GOT1000 Series Connection Manual (Non-Mitsubishi Products 2) for GT Works3

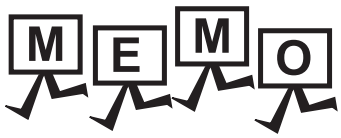
MEMO

59. CONNECTION TO HIRATA CORPORATION HNC CONTROLLER

For the connection to the HNC controller manufactured by Hirata Corporation, please contact our company.

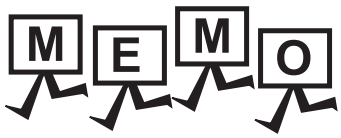
MEMO

60. CONNECTION TO MURATEC CONTROLLER

For the connection to the MURATEC controller, please contact our company.

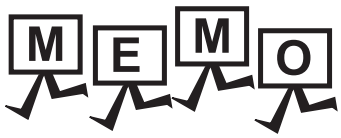
MEMO

MICROCOMPUTER CONNECTION

61. MICROCOMPUTER CONNECTION (SERIAL) . . . . . 61 - 1
62. MICROCOMPUTER CONNECTION (ETHERNET). . . . . 62 - 1

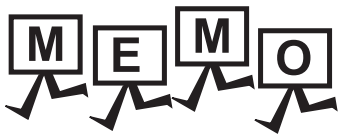
MEMO

61. MICROCOMPUTER CONNECTION (SERIAL)

61.1 Microcomputer Connection (Serial)

The "microcomputer connection (Serial)" is a function by which data can be written or read from a PC, microcomputer board, PLC, etc. (hereinafter referred to as "host") to virtual devices of the GOT.

Interrupt output is also available from the GOT to the host.

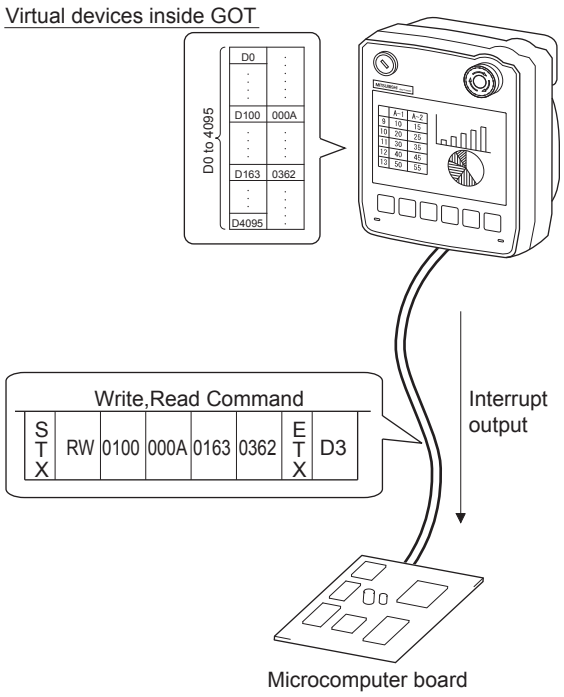

POINT

Virtual devices inside the GOT

The devices inside the GOT are used in the microcomputer connection.
(PLC devices are not used.)

61.4 Device Data Area

■ Flow of data processing

(1) When reading or writing data

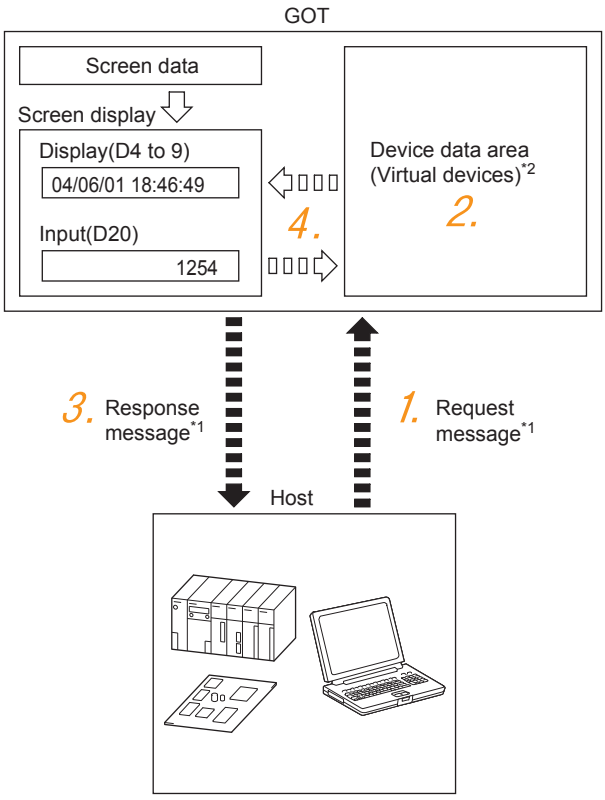

1. The host sends a request message (the read/write command) to the GOT.
2. The GOT performs a read/write processing to its virtual devices according to the request from the host.
3. Upon completion of the processing, the GOT sends a response message (processing result) to the host.
4. Creating the following objects on the screen allows you to use the data read/written to the virtual devices:
   - Numerical Display that displays data written by the write command
   - Numerical Input that is used to input data to be upload to the host

(2) When outputting interrupts

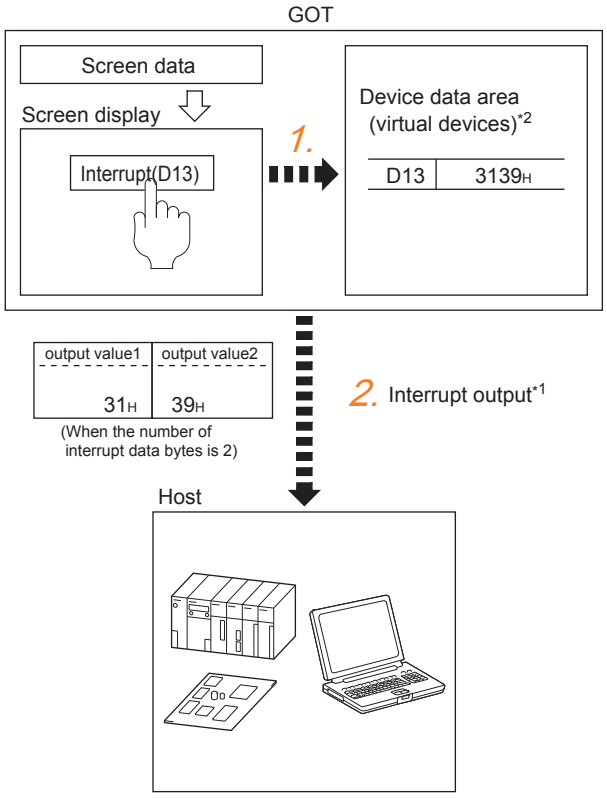

1. Data are written to the virtual devices for interrupt output from the touch switches on the GOT.

2. The GOT sends the written data (interrupt output) to the host.

*1 61.5 Message Formats

*2 61.4 Device Data Area

61.2 System Configuration

61.2.1 For the microcomputer connection (serial)

Communication driver

Computer

(1) When using the connector conversion box

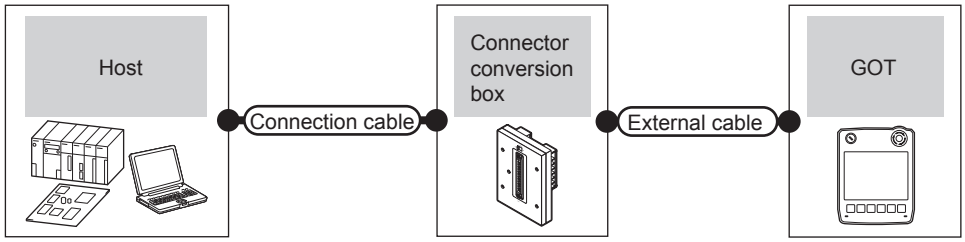

Host	Connection cable	Connector conversion box	External cable	GOT Model	Total distance	Number of connectable equipment
Communication type	Connection diagram number					
RS-232	User preparing RS-232 connection diagram 1)	GT11H-CNB-37S	GT11H-C30-37P(3m)	GT14 Handy	6m	1 GOT for 1 host
RS-422	User preparing RS-422 connection diagram 1)	GT11H-CNB-37S	GT11H-C30-37P(3m) GT11H-C60-37P(6m) GT11H-C100-37P(10m)	GT14 Handy	13m	

(2) When using the external cable (GT11H-C□□□-37P)

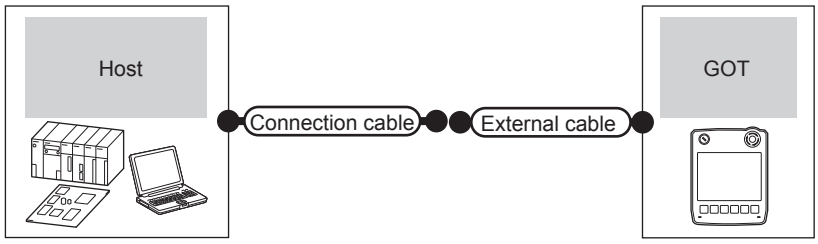

Host	Connection cable	External cable	GOT model	Total distance	Number of connectable equipment
Communication type	Connection diagram number				
RS-232	User preparing RS-232 connection diagram 2)	GT11H-C30-37P(3m)	GT14 Handy	6m	1 GOT for 1 host
RS-422	User preparing RS-422 connection diagram 2)	GT11H-C30-37P(3m) GT11H-C60-37P(6m) GT11H-C100-37P(10m)	GT14 Handy	13m	

(3) When using the external cable (GT11H-C□□□)

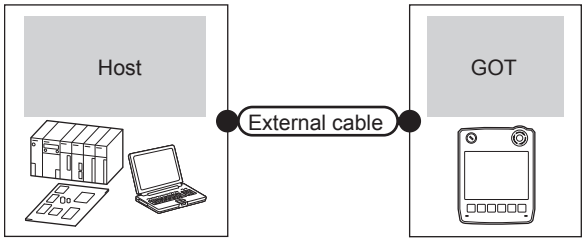

Host Communication type	External cable	GOT model	Total distance	Number of connectable equipment
RS-232	GT11H-C30(3m) GT11H-C60(6m) User preparing RS-232 connection diagram 3)	GT14 Handy	6m	1 GOT for 1 host
RS-422	GT11H-C30(3m) GT11H-C60(6m) GT11H-C100(10m) User preparing RS-422 connection diagram 3)	GT14 Handy	13m	

61.3 Connection Diagram

The following diagram shows the connection between the GOT and the microcomputer.

61.3.1 RS-232 cable

■ Connection diagram

RS-232 connection diagram 1)

Example of the case where the DTR/DSR signal is not used

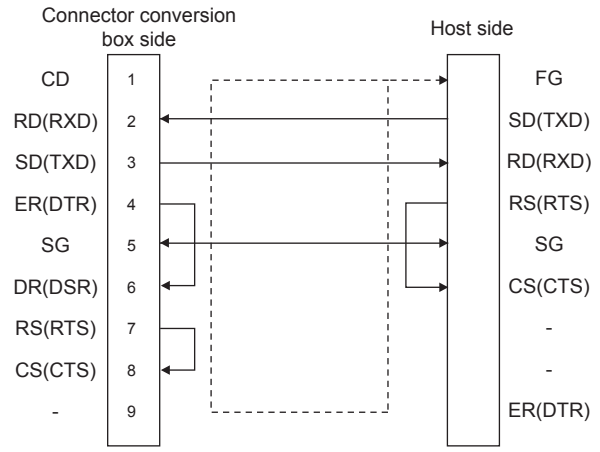

Example of the case where the DTR/DSR signal is used

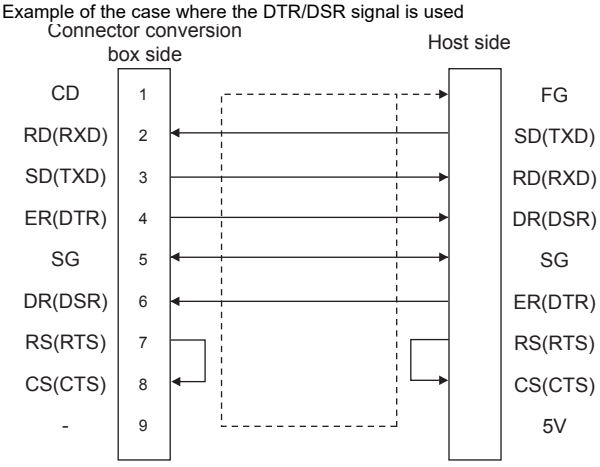

RS-232 connection diagram 2)

Example of the case where the DTR/DSR signal is not used

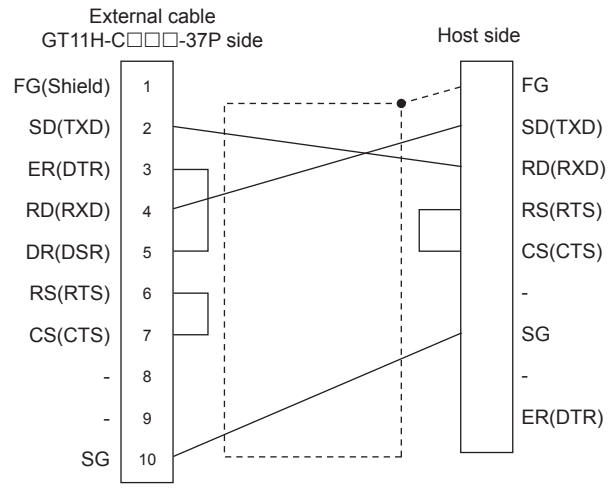

Example of the case where the DTR/DSR signal is used

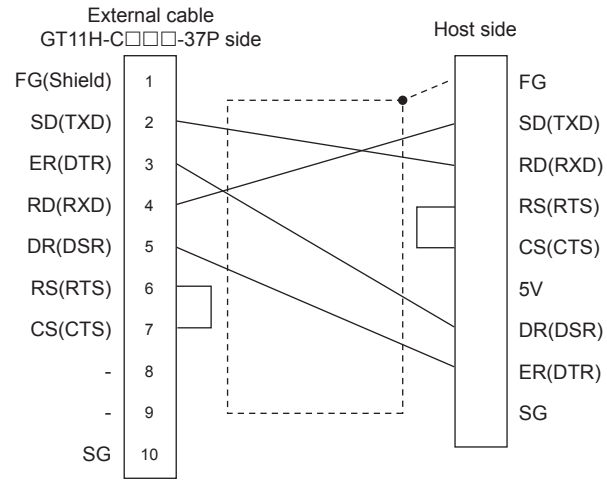

RS-232 connection diagram 3)

Example of the case where the DTR/DSR signal is not used

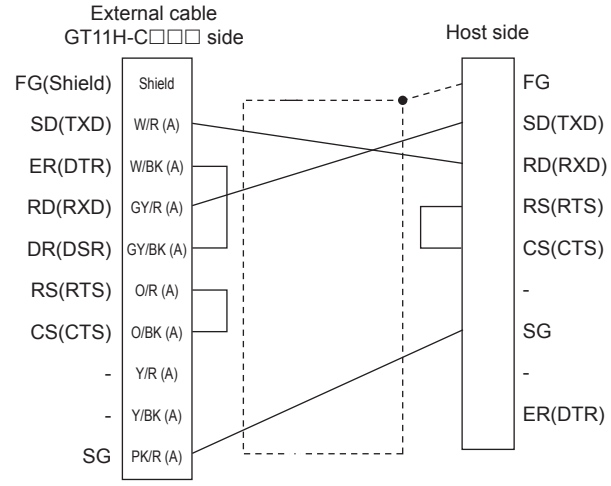

Example of the case where the DTR/DSR signal is used

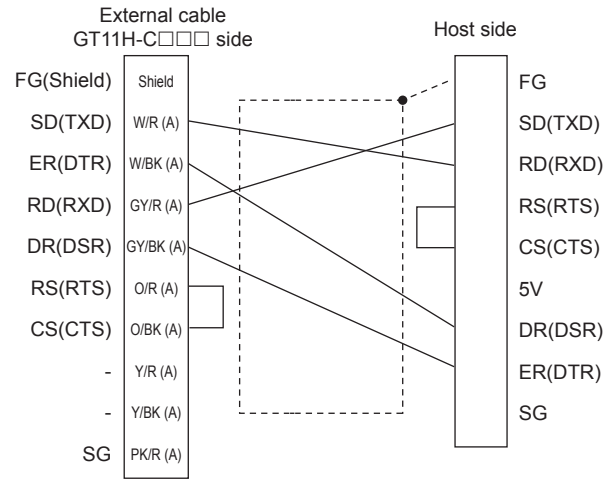

■ Precautions when preparing a cable

(1) Cable length
The total distance (between the GOT and a controller) of RS-232 cable must be 6m or less.

(2) Connector conversion box side connector
For the connector conversion box side connector, refer to the following.

☞ 6.6 Connector Conversion Box

(3) External cable side connector
For the connector specifications of the external cable side, refer to the following.

☞ 8.2 External Cable, Relay Cable

61.3.2 RS-422 cable

■ Connection diagram

RS-422 connection diagram 1)

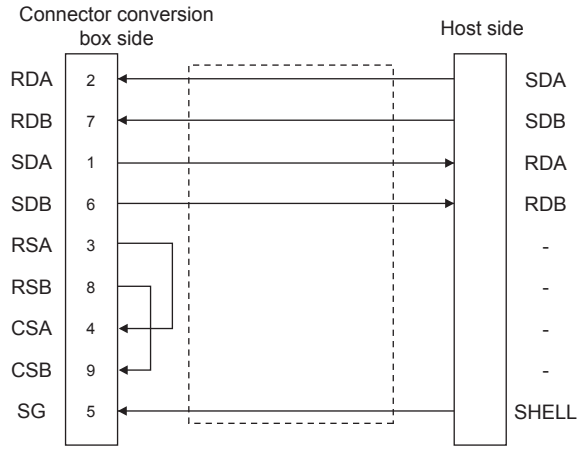

RS-422 connection diagram 2)

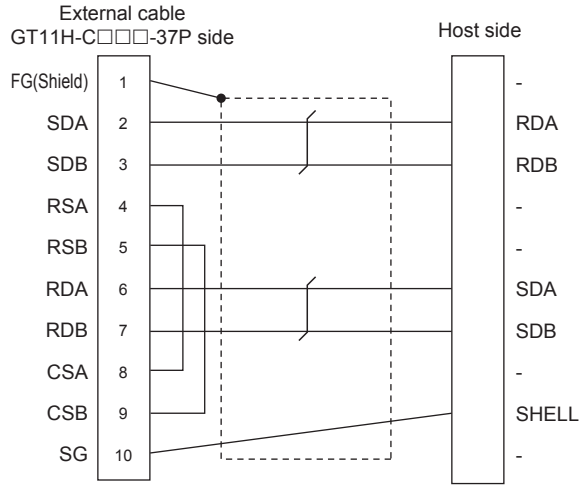

RS-422 connection diagram 3)

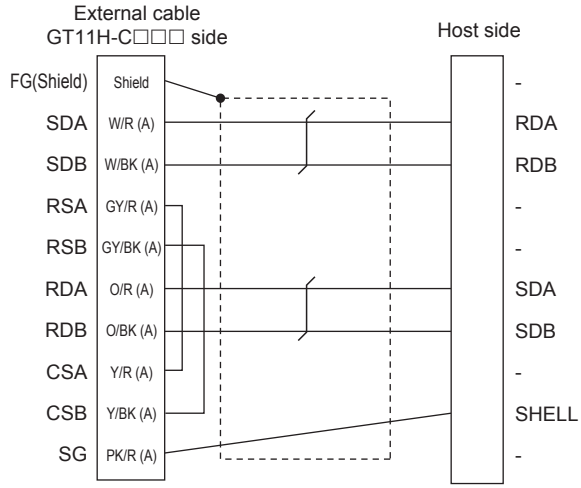

POINT

The polarity A and B in signal names may be reversed depending on the microcomputer to be used.
Prepare a cable according to the microcomputer to be used.

■ Precautions when preparing a cable

(1) Cable length
The total distance (between GOT and controllers) of RS-422 cable must be 13m or less.

(2) Connector conversion box side connector
For the connector conversion box side connector, refer to the following.

☞ 6.6 Connector Conversion Box

61.4 Device Data Area

The following shows a list of virtual devices inside the GOT available in the microcomputer connection (serial), and the address specification values for each data format.

The address specification of the virtual devices differs depending on the data format.*1

Virtual device*2			Address specification value					Refer to
Name	Device range (decimal)	Device type	Formats 1, 2	Formats 3 to 6	Formats 7 to 10	Formats 11 to 13	Formats 14, 15	
D	0 to 4095	Word	0 to 4095	D0 to 4095	D0 to 4095	0000 to 0FFFH	8000 to 9FFFH	61.4.1
R	0 to 4095	Word	4096 to 8191	R0 to 4095	R0 to 4095	1000 to 1FFFH	0000 to 1FFFH	61.4.2
L	0 to 2047	Bit	8192 to 8319	L0 to 2047	L0 to 2047	2000 to 207FH	A000 to A0FFH	61.4.3
M	0 to 2047	Bit	8320 to 8447	M0 to 2047	M0 to 2047	2080 to 20FFH	2000 to 20FFH	61.4.4
SD	0 to 15	Word	8448 to 8463	D9000 to 9015	SD0 to 15	2100 to 210FH	2100 to 211FH (3000 to 300DH)*3	61.4.5
SM	0 to 63	Bit	8464 to 8467	M9000 to 9063	SM0 to 63	2110 (2113H)	2200 (2207H)	61.4.6

*1 For the address specification method for each data format, refer to the following.

61.5 Message Formats

- Formats 1, 2 : GOT-A900 Series microcomputer connection
- Formats 3 to 6 : A compatible 1C frame
- Formats 7 to 10 : QnA compatible 3C/4C frame
- Formats 11 to 13 : Digital Electronics Corporation's memory link method
- Formats 14, 15 : GOT-F900 Series microcomputer connection

*2 When reusing GOT900 Series project data

- GOT-A900 Series virtual devices (D0 to 2047)
  Can be used as they are without changing the assignments.
- GOT-F900 Series virtual devices
  Since some of the assigned virtual device values differ as indicated below, change the assignment using device batch edit of GT Designer3.
  Refer to the following manual for device batch edit of GT Designer3.

GT Designer3 Version1 Screen Design Manual

GOT1000 Series virtual devices	GOT-F900 Series virtual devices
D0 to 2047	-
D2048 to 4095	-
R0 to 4095	D0 to 4095
L0 to 2047	-
M0 to 2047	M0 to 2047
SD0 to 15	D8000 to 8015 GD0 to 6
SM0 to 63	M8000 to 8063

*3 Access to SD3 to 9 can also be made by the specification of the addresses (3000 to 300DH) of GD0 to 6 on the GOT-F900 Series.

POINT

Values of virtual devices inside the GOT

When the GOT is turned OFF or reset, values are cleared to their defaults (bit devices: OFF, word devices: 0).
Values are held in the memory when project data are written to the GOT.

61.4.1 D devices

The D devices are word devices into which GOT communication errors, clock data or other information are stored. The user can also store data using the user area.

■ List of D devices

The following lists the D devices (virtual devices inside the GOT).

<table>
<tr><th>Address</th><th>Description</th><th>Set side</th></tr>
<tr><td>D0 to 2</td><td>Unused</td><td>-</td></tr>
<tr><td>D3</td><td>Communication error status
Stores the communication error details of GOT.
 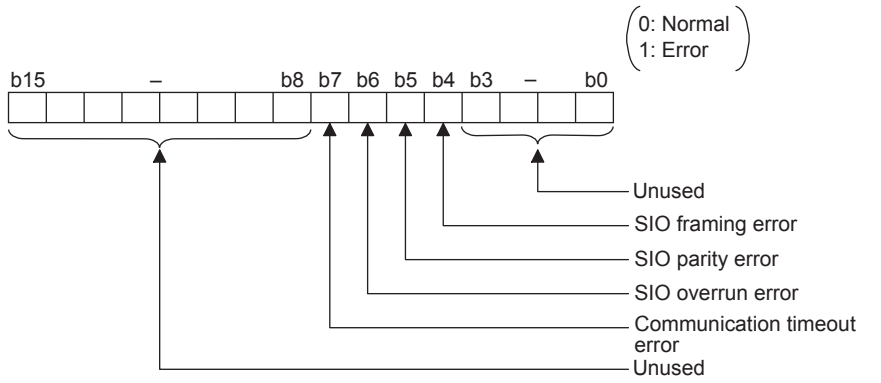

• b4 to 6 turn ON when an SIO error occurs, and turn OFF when a request message from the host is received successfully after the error occurrence.
• b7 turns ON about 3 seconds after the host side DTR becomes OFF, and turns OFF when transmission is performed successfully to the host after the error occurrence.</td><td rowspan="4">System</td></tr>
<tr><td>D4</td><td>Clock data (year)
 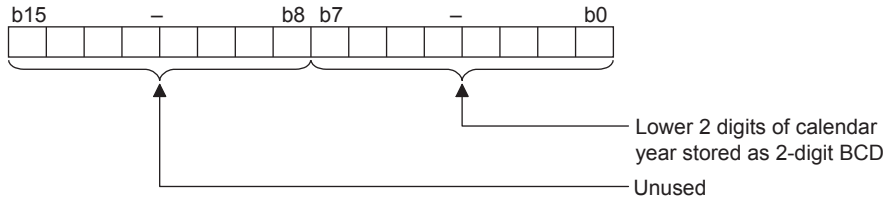
</td></tr>
<tr><td>D5</td><td>Clock data (month)
 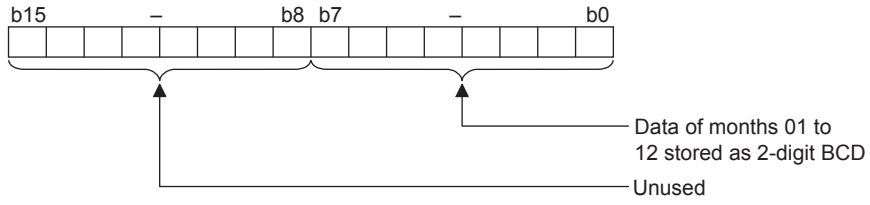
</td></tr>
<tr><td>D6</td><td>Clock data (day)
 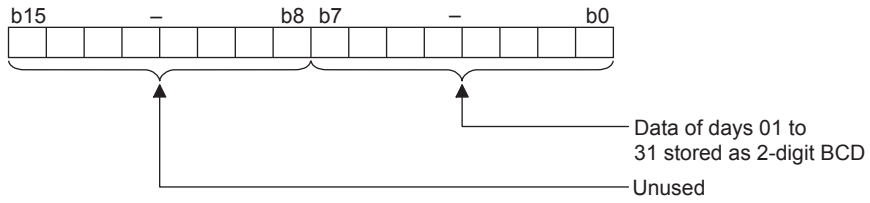
</td></tr>
</table>

(Continued to next page)

(From previous page)

Address	Description	Set side
D7	Clock data (hour) 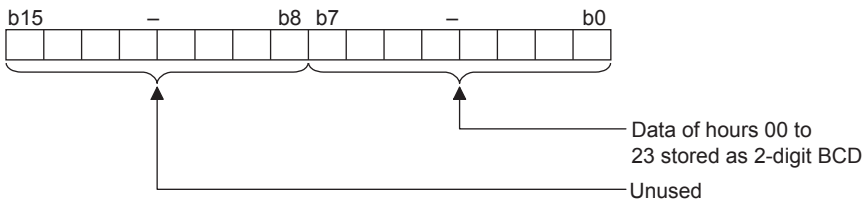	System
D8	Clock data (minute) 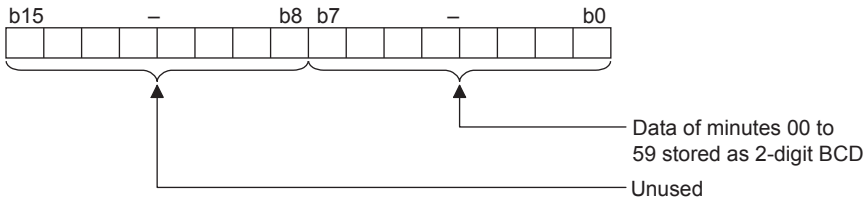	
D9	Clock data (second) 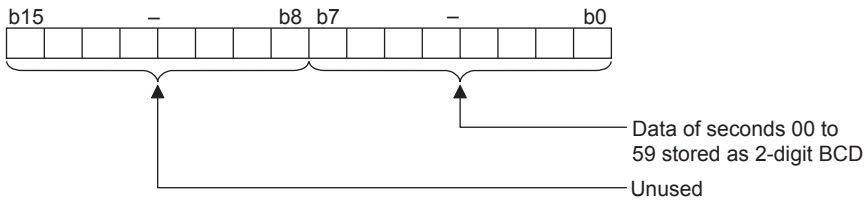	
D10	Clock data (day of week)*1 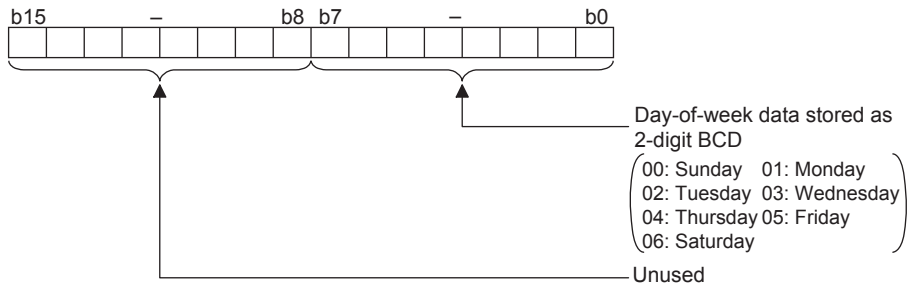	
D11, D12	Unused	-

(Continued to next page)

*1 If a wrong day of the week is set by the clock data setting command, the clock data will differ from the time displayed on the utility.
Example: When June 1, 2004 (Thursday) is set by the clock data setting command (the actual day of the week is Tuesday)
"04" is stored to D10 although Tuesday (TUE) will be displayed on the utility time display.

(From previous page)

<table>
<tr><th>Address</th><th>Description</th><th>Set side</th></tr>
<tr><td>D13</td><td rowspan="2">Interrupt output
When data are written to D13 and D14 from a GOT touch switch, for example, the data of D13 and D14 are transmitted (interrupt output) to the host side.*1*2
The data amount (number of bytes) to be interrupt-output is set at "Interrupt Data Byte" in "Communication Detail Settings".
(61.6.1 Setting communication interface (Communication settings))
• Output value when 1 is set to "Interrupt Data Byte" in "Communication Detail Settings"
 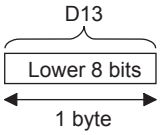

• Output value when 2 is set to "Interrupt Data Byte" in "Communication Detail Settings"
 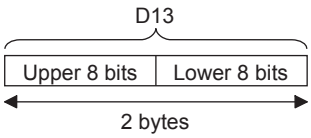

• Output value when 4 is set to "Interrupt Data Byte" in "Communication Detail Settings"
(1) When setting the LH order to [32bit Storage] for the communication detail settings
 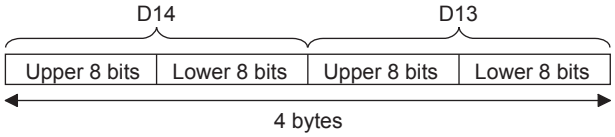

(2) When setting the HL order to [32bit Storage] for the communication detail settings
 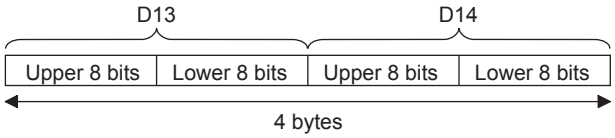
</td><td rowspan="2">User</td></tr>
<tr><td>D14</td></tr>
<tr><td>D15 to 19</td><td>Unused</td><td>-</td></tr>
<tr><td>D20 to 2031</td><td>User area</td><td>User</td></tr>
<tr><td>D2032 to 2034</td><td>Unused</td><td>-</td></tr>
<tr><td>D2035</td><td>1-second binary counter
The counter is incremented at 1-second intervals after the GOT is turned ON.
(The time elapsed after GOT is turned ON is stored in 1-second units.)
Data are stored in binary format.</td><td>System</td></tr>
<tr><td>D2036 to 4095</td><td>User area</td><td>User</td></tr>
</table>

*1 After writing data, the interrupt is output within a period of 1 to 10ms.
*2 When data are written to D13 and D14 from the host side, interrupt output is not performed.

POINT

(1) The side where virtual devices are set
System: Set on the system side.
User: Set on the user side (by sending request messages from host or using the touch switches, etc. on the GOT).

(2) Interrupt output (D13, D14)
- To disable the interrupt output, turn ON SM52 (interrupt code output disable flag). (61.4.6 SM devices)
- To issue interrupts, set the data length to "8 bits" at "Communication Detail Settings".
  (61.6.1 Setting communication interface (Communication settings))
- When "7 bits" is set, the MSB (8th bit) is ignored. (Example: FFH → 7FH)

■ Differences in address specifications by data format

The address specification of devices varies depending on the data format.*1
The following shows the address specification values for each data format.

Address	Address specification value				
	Formats 1, 2	Formats 3 to 6	Formats 7 to 10	Formats 11 to 13	Formats 14, 15
D0	0	D0	D0	0000H	8000H / 8001H — 8000H (Upper 8 bits), 8001H (Lower 8 bits)
D1	1	D1	D1	0001H	8002H / 8003H — 8002H (Upper 8 bits), 8003H (Lower 8 bits)
..	..	..	..	..	..
D4095	4095	D4095	D4095	0FFFH	9FFEH / 9FFFH — 9FFEH (Upper 8 bits), 9FFFH (Lower 8 bits)

*1 For the address specification method for each data format, refer to the following.

61.5 Message Formats

- Formats 1, 2 : GOT-A900 Series microcomputer connection
- Formats 3 to 6 : A compatible 1C frame
- Formats 7 to 10 : QnA compatible 3C/4C frame
- Formats 11 to 13 : Digital Electronics Corporation's memory link method
- Formats 14, 15 : GOT-F900 Series microcomputer connection

61.4.2 R devices

The R devices are word devices into which user data are stored.
All of these devices can be used as a user area.

■ List of R devices and differences in address specification by data format

The following shows the R devices (virtual devices inside the GOT).
The address specification values different depending on the data format are also given below.*1

Address	Address specification value				
	Formats 1, 2	Formats 3 to 6	Formats 7 to 10	Formats 11 to 13	Formats 14, 15
R0	4096	R0	R0	1000H	0000H / 0001H — 0000H (Upper 8 bits), 0001H (Lower 8 bits)
R1	4097	R1	R1	1001H	0002H / 0003H — 0002H (Upper 8 bits), 0003H (Lower 8 bits)
..	..	..	..	..	..
R4095	8191	R4095	R4095	1FFFH	1FFEH / 1FFFH — 1FFEH (Upper 8 bits), 1FFFH (Lower 8 bits)

*1 For the address specification method for each data format, refer to the following.

61.5 Message Formats

- Formats 1, 2 : GOT-A900 Series microcomputer connection
- Formats 3 to 6 : A compatible 1C frame
- Formats 7 to 10 : QnA compatible 3C/4C frame
- Formats 11 to 13 : Digital Electronics Corporation's memory link method
- Formats 14, 15 : GOT-F900 Series microcomputer connection

61.4.3 L devices

The L devices are bit devices into which user data are stored.
All of these devices can be used as a user area.

■ List of L devices and differences in address specification by data format

The following shows the L devices (virtual devices inside the GOT).

The address specification values different depending on the data format are also given below.*1

Address								Address specification value				
b7	b6	b5	b4	b3	b2	b1	b0	Formats 1, 2	Formats 3 to 6	Formats 7 to 10	Formats 11 to 13	Formats 14, 15
L7	L6	L5	L4	L3	L2	L1	L0	8192	Same as address column on left*2		2000H	A000H
L15	L14	L13	L12	L11	L10	L9	L8					A001H
L23	L22	L21	L20	L19	L18	L17	L16	8193			2001H	A002H
L31	L30	L29	L28	L27	L26	L25	L24					A003H
..								..			..	..
L2039	L2038	L2037	L2036	L2035	L2034	L2033	L2032	8319			207FH	A0FEH
L2047	L2046	L2045	L2044	L2043	L2042	L2041	L2040					A0FFH

*1 For the address specification method for each data format, refer to the following.

61.5 Message Formats

- Formats 1, 2 : GOT-A900 Series microcomputer connection
- Formats 3 to 6 : A compatible 1C frame
- Formats 7 to 10 : QnA compatible 3C/4C frame
- Formats 11 to 13 : Digital Electronics Corporation's memory link method
- Formats 14, 15 : GOT-F900 Series microcomputer connection

*2 For reading or writing data in word units, specify the addresses in 16-point units. (Example: L0, L16, L32, etc.)

61.4.4 M devices

The M devices are bit devices into which user data are stored.
All of these devices can be used as a user area.

■ List of M devices and differences in address specification by data format

The following shows the M devices (virtual devices inside the GOT).

The address specification values different depending on the data format are also given below.*1

Address								Address specification value				
b7	b6	b5	b4	b3	b2	b1	b0	Formats 1, 2	Formats 3 to 6	Formats 7 to 10	Formats 11 to 13	Formats 14, 15
M7	M6	M5	M4	M3	M2	M1	M0	8320	Same as address column on left*2		2080H	2000H
M15	M14	M13	M12	M11	M10	M9	M8					2001H
M23	M22	M21	M20	M19	M18	M17	M16	8321			2081H	2002H
M31	M30	M29	M28	M27	M26	M25	M24					2003H
..								..			..	..
M2039	M2038	M2037	M2036	M2035	M2034	M2033	M2032	8447			20FFH	20FEH
M2047	M2046	M2045	M2044	M2043	M2042	M2041	M2040					20FFH

*1 For the address specification method for each data format, refer to the following.

61.5 Message Formats

- Formats 1, 2 : GOT-A900 Series microcomputer connection
- Formats 3 to 6 : A compatible 1C frame
- Formats 7 to 10 : QnA compatible 3C/4C frame
- Formats 11 to 13 : Digital Electronics Corporation's memory link method
- Formats 14, 15 : GOT-F900 Series microcomputer connection

*2 For reading or writing data in word units, specify the addresses in 16-point units. (Example: M0, M16, M32, etc.)

61.4.5 SD devices

The SD devices are word devices into which GOT communication errors (error codes), clock data and other information are stored.

■ List of SD devices

The following lists the SD devices (virtual devices inside the GOT).

Address	Description	Set side
SD0 SD1	100ms counter (32bits) The counter is incremented at 100ms intervals after GOT is turned ON. (The time elapsed after GOT is turned ON is stored in 100ms units.) (1) When setting the LH order to [32bit Storage] for the communication detail settings The lower and upper bits are stored in SD0 and SD1 respectively. 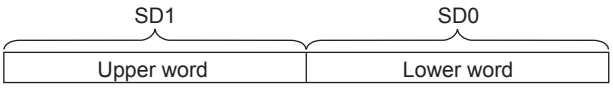 (2) When setting the HL order to [32bit Storage] for the communication detail settings The upper and lower bits are stored in SD0 and SD1 respectively. 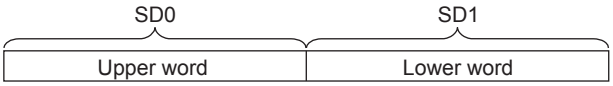	System
SD2*1	Communication error status An error data (error code) occurred during communication is stored. • Host Address (Communication error that occurred on the request destination GOT) 0: No error 1: Parity error 2: Framing error 3: Overrun error 4: Communication message error 5: Command error 6: Clock data setting error • Other station (Communication error that occurred on another GOT when multiple GOTs are connected) 101: Parity error 102: Framing error 103: Overrun error 104: Communication message error 105: Timeout error (No station of the specified address exists.) 106: Multiple units not connectable 107: Clock data setting error	
SD3	Clock data (second): Second data of 00 to 59 is stored.	
SD4	Clock data (minute): Minute data of 00 to 59 is stored.	
SD5	Clock data (hour): Hour data of 00 to 23 is stored.	
SD6	Clock data (day): Day data of 01 to 31 is stored.	
SD7	Clock data (month): Month data of 01 to 12 is stored.	
SD8	Clock data (year) 4-digit year data is stored.	System
SD9	Clock data (day of week)*2 Day-of-the-week data is stored. 0: Sunday 1: Monday 2: Tuesday 3: Wednesday 4: Thursday 5: Friday 6: Saturday	
SD10 to 15	Unused	-

*1 For details and corrective actions for the errors (error codes) that are stored into SD2, refer to the following:

■ Details and actions for errors (error codes) stored into SD2

*2 If a wrong day of the week is set by the clock data setting command, the clock data will differ from the time displayed on the utility.
Example: When June 1, 2004 (Thursday) is set by the clock data setting command (the actual day of the week is Tuesday)
"4" is stored to SD9 although Tuesday (TUE) will be displayed on the utility time display.

POINT

The side where virtual devices are set

System: Set on the system side.

User: Set on the user side (by sending request messages from host or using the touch switches, etc. on the GOT).

■ Details and actions for errors (error codes) stored into SD2

Error code	Description	Measures
0	No error	-
1, 101	Parity error The parity bit does not match.	• Check the communication cable and communication module attachment. • Check the settings of "Communication Detail Settings". • Match the GOT and host transmission settings.
2, 102	Framing error The data bit and/or stop bit are not correct.	
3, 103	Overrun error The next data was transmitted from the host before GOT completes the processing of the data received.	• Check the settings of "Communication Detail Settings". • Decrease the transmission speed.
4, 104	Communication message error EXT/CR could not be found before the upper limit of the receive buffer was exceeded.	• Check the communication cable and communication module attachment. • Check the settings of "Communication Detail Settings". • Review the contents of the message to transmit.
5	Command error An unsupported command was used.	• Review the contents of the message to transmit. • Check the commands in the message. (☞ 61.5.2 List of commands)
105	Timeout error There is no response from the GOT, or the station of the specified address does not exist.	• Check the communication cable and communication module attachment. • Check the settings of "Communication Detail Settings". • Review the contents of the message to transmit.
106	Multiple units not connectable The RS-232 port is occupied.	• Check the communication cable and communication module attachment. • Check the settings of "Communication Detail Settings". • Check to see if the RS-232 port is occupied.
6, 107	Clock data setting error The setting value of the clock data has error.	• Review the contents of the message to transmit. • Check whether the non-existent data is set (e.g. setting "07" at the day of the week) as clock data.

■ Differences in address specifications by data format

The address specification of devices varies depending on the data format.*1
The following shows the address specification values for each data format.

Address	Address specification value					
	Formats 1, 2	Formats 3 to 6	Formats 7 to 10	Formats 11 to 13	Formats 14, 15*2	
SD0	8448	D9000	SD0	2100H	2100H 2101H	2100H: Upper 8 bits; 2101H: Lower 8 bits
SD1	8449	D9001	SD1	2101H	2102H 2103H	2102H: Upper 8 bits; 2103H: Lower 8 bits
SD2	8450	D9002	SD2	2102H	2104H 2105H	2104H: Upper 8 bits; 2105H: Lower 8 bits
SD3	8451	D9003	SD3	2103H	2106H (3000H) 2107H (3001H)	2106H (3000H): Upper 8 bits; 2107H (3001H): Lower 8 bits
SD4	8452	D9004	SD4	2104H	2108H (3002H) 2109H (3003H)	2108H (3002H): Upper 8 bits; 2109H (3003H): Lower 8 bits
SD5	8453	D9005	SD5	2105H	210AH (3004H) 210BH (3005H)	210AH (3004H): Upper 8 bits; 210BH (3005H): Lower 8 bits
SD6	8454	D9006	SD6	2106H	210CH (3006H) 210DH (3007H)	210CH (3006H): Upper 8 bits; 210DH (3007H): Lower 8 bits
SD7	8455	D9007	SD7	2107H	210EH (3008H) 210FH (3009H)	210EH (3008H): Upper 8 bits; 210FH (3009H): Lower 8 bits
SD8	8456	D9008	SD8	2108H	2110H (300AH) 2111H (300BH)	2110H (300AH): Upper 8 bits; 2111H (300BH): Lower 8 bits
SD9	8457	D9009	SD9	2109H	2112H (300CH) 2113H (300DH)	2112H (300CH): Upper 8 bits; 2113H (300DH): Lower 8 bits

*1 For the address specification method for each data format, refer to the following.

61.5 Message Formats

- Formats 1, 2 : GOT-A900 Series microcomputer connection
- Formats 3 to 6 : A compatible 1C frame
- Formats 7 to 10 : QnA compatible 3C/4C frame
- Formats 11 to 13 : Digital Electronics Corporation's memory link method
- Formats 14, 15 : GOT-F900 Series microcomputer connection

*2 SD3 to 9 correspond to GD0 to 6 on the GOT-F900 Series.
Access to SD3 to 9 can be also made by the specification of the addresses (3000 to 300DH) of GD0 to 6 on the GOT-F900 Series.

61.4.6 SM devices

The SM devices are bit devices into which interrupt outputs and clock data that turn ON/OFF at 1-second cycles.

■ List of SM devices

The following shows the SM devices (virtual devices inside the GOT).

<table>
<tr><th>Address</th><th>Description</th><th>Set side</th></tr>
<tr><td>SM0 to 49</td><td>Interrupt output
When the ON/OFF state of SM0 to 49 is changed by a touch switch on the GOT, for example, the interrupt codes shown below are transmitted (interrupt output) to the host side.*1*2
The data amount (number of bytes) to be interrupt-output is set at "Interrupt Data Byte" in "Communication Detail Settings". (61.6.1 Setting communication interface (Communication settings))
<table>
<tr><th>Address</th><th>Event type</th><th>Interrupt code</th></tr>
<tr><td rowspan="2">SM0</td><td>Changed from OFF to ON</td><td>50H</td></tr>
<tr><td>Changed from ON to OFF</td><td>51H</td></tr>
<tr><td rowspan="2">SM1</td><td>Changed from OFF to ON</td><td>52H</td></tr>
<tr><td>Changed from ON to OFF</td><td>53H</td></tr>
<tr><td rowspan="2">SM2</td><td>Changed from OFF to ON</td><td>54H</td></tr>
<tr><td>Changed from ON to OFF</td><td>55H</td></tr>
<tr><td>. .</td><td>. .</td><td>. .</td></tr>
<tr><td rowspan="2">SM48</td><td>Changed from OFF to ON</td><td>B0H</td></tr>
<tr><td>Changed from ON to OFF</td><td>B1H</td></tr>
<tr><td rowspan="2">SM49</td><td>Changed from OFF to ON</td><td>B2H</td></tr>
<tr><td>Changed from ON to OFF</td><td>B3H</td></tr>
</table></td><td>User</td></tr>
<tr><td>SM50</td><td>1-second cycle clock
Turns ON/OFF at a 1-second cycle.
</td><td rowspan="2">System</td></tr>
<tr><td>SM51</td><td>2-second cycle clock
Turns ON/OFF at a 2-second cycle.
</td></tr>
<tr><td>SM52</td><td>Interrupt code output disable flag
Enables or disables the output of the interrupt code.
OFF: Interrupt code output enabledON: Interrupt code output disabled
When set to disable the interrupt code output, no interrupt data are output to the host.
(Relevant devices: D13, D14, SM0 to 49)</td><td>User</td></tr>
<tr><td>SM53 to 63</td><td>Unused</td><td>-</td></tr>
</table>

*1 After the ON/OFF state is changed, the interrupt data are output within a period of 1 to 10ms.

*2 When the ON/OFF state of SM0 to 49 is changed from the host side, interrupt output is not performed.

POINT

(1) The side where virtual devices are set
System: Set on the system side.
User: Set on the user side (by sending request messages from host or using the touch switches, etc. on the GOT).

(2) Interrupt outputs (SM0 to 49)

- To disable the interrupt output, turn ON SM52 (interrupt code output disable flag). (61.4.6 SM devices)
- To issue interrupts, set the data length to "8 bits" at "Communication Detail Settings".
  (61.6.1 Setting communication interface (Communication settings))
- When "7 bits" is set, the MSB (8th bit) is ignored. (Example: FFH → 7FH)

■ Differences in address specifications by data format

The address specification of devices varies depending on the data format.*1
The following shows the address specification values for each data format.

Address								Address specification value				
b7	b6	b5	b4	b3	b2	b1	b0	Formats 1, 2	Formats 3 to 6	Formats 7 to 10	Formats 11 to 13	Formats 14, 15
SM7	SM6	SM5	SM4	SM3	SM2	SM1	SM0	8464	*2*4	*3*4	2110H	2200H
SM15	SM14	SM13	SM12	SM11	SM10	SM9	SM8					2201H
SM23	SM22	SM21	SM20	SM19	SM18	SM17	SM16	8465			2111H	2202H
SM31	SM30	SM29	SM28	SM27	SM26	SM25	SM24					2203H
SM39	SM38	SM37	SM36	SM35	SM34	SM33	SM32	8466			2112H	2204H
SM47	SM46	SM45	SM44	SM43	SM42	SM41	SM40					2205H
Unused			SM52	SM51	SM50	SM49	SM48	8467			2113H	2206H
Unused								-				-

*1 For the address specification method for each data format, refer to the following.

61.5 Message Formats

- Formats 1, 2 : GOT-A900 Series microcomputer connection
- Formats 3 to 6 : A compatible 1C frame
- Formats 7 to 10 : QnA compatible 3C/4C frame
- Formats 11 to 13 : Digital Electronics Corporation's memory link method
- Formats 14, 15 : GOT-F900 Series microcomputer connection

*2 In formats 3 to 6, values are specified within a range of M9000 to 9052.
*3 In formats 7 to 10, values are specified within a range of SM0 to 52.
*4 For reading or writing data in word units, specify the addresses in 16-point units. (Example: SM0, SM16, SM32, etc.)

61.5 Message Formats

This section describes the format of messages that can be used in the microcomputer connection (serial).

61.5.1 Data format type and application

■ Data format type and application

Communication is possible using any of the data formats shown below.

(1) Formats 1, 2 (GOT-A900 Series microcomputer connection)
This is the same message format as when a microcomputer connection is established with the GOT-A900 series.

Type	Name	Description	Refer to
Format 1	GOT-A900 Series microcomputer connection (format 1)	This format is used when the GOT is connected to the host in a 1:1 connection.	61.5.3
Format 2	GOT-A900 Series microcomputer connection (format 2)	This is the appended format with error code at the error response of the GOT-A900 Series microcomputer connection (format 1).	

(2) Formats 3 to 6 (A compatible 1C frame)
This is the same message format as when communication is performed using the dedicated protocol of the A series computer link module.

Type	Name	Description	Refer to
Format 3	A compatible 1C frame (format 1)	This is the basic format of the dedicated protocols.	61.5.4
Format 4	A compatible 1C frame (format 2)	This is the appended format of the A compatible 1C frame (format 1) with a block No.	
Format 5	A compatible 1C frame (format 3)	This is the enclosed format of the A compatible 1C frame (format 1) with STX and ETX.	
Format 6	A compatible 1C frame (format 4)	This is the appended format of the A compatible 1C frame (format 1) with CR and LF.	

(3) Formats 7 to 10 (QnA compatible 3C/4C frame)
This is the same message format as when a communication is performed using the MC protocol of Q/QnA Series serial communication module.

Type	Name	Description	Refer to
Format 7	QnA compatible 3C/4C frame (format 1)	This is the basic format of the MC protocols.	61.5.5
Format 8	QnA compatible 3C/4C frame (format 2)	This is the appended format of the QnA compatible 3C/4C frame (format 1) with block No.	
Format 9	QnA compatible 3C/4C frame (format 3)	This is the enclosed format of the QnA compatible 3C/4C frame (format 1) with STX and ETX.	
Format 10	QnA compatible 3C/4C frame (format 4)	This is the appended format of the QnA compatible 3C/4C frame (format 1) with CR and LF.	

(4) Formats 11 to 13 (Digital Electronics Corporation's memory link method)
This is the same format as the protocol of the Digital Electronics Corporation's memory link method.

Type	Name	Description	Refer to
Format 11	Digital Electronics Corporation's memory link method (compatible mode)	This is the basic format of the Digital Electronics Corporation's memory link method.	61.5.6
Format 12	Digital Electronics Corporation's memory link method (extended mode, ASCII code 1:1)	This is the appended format of the Digital Electronics Corporation's memory link method (compatible mode) with sum check, CR and LF.	
Format 13	Digital Electronics Corporation's memory link method (extended mode, ASCII code 1:n)	This is the appended format of the Digital Electronics Corporation's memory link method (extended mode, ASCII code 1:1) with a station No.	

(5) Formats 14, 15 (GOT-F900 Series microcomputer connection)
This is the same message format as when a microcomputer connection is established with the GOT-F900 Series.

Type	Name	Description	Refer to
Format 14	GOT-F900 Series microcomputer connection (format 1)	Use this format when establishing a 1:1 or m:n connection between the GOT and the host. The end code is CR.	61.5.7
Format 15	GOT-F900 Series microcomputer connection (format 2)	Use this format when establishing a 1:1 or m:n connection between the GOT and the host. The end code is ETX or sum check.	

■ How to set data format

Set the data format at [Detail Setting] in GT Designer3.
For details of the data format setting method, refer to the following.

☞ 61.6.1 Setting communication interface (Communication settings)

61.5.2 List of commands

The following shows the list of commands available in each data format.

■ List of commands for formats 1, 2 (GOT-A900 Series microcomputer connection)

Command		Command name	Description	Max. number of points processed
Symbol	ASCII code			
RD	52H 44H	Batch read in word units	Reads bit devices in 16-point units.	64 words (1024 points)
			Reads word devices in 1-point units.	64 points
WD	57H 44H	Batch read in word units	Writes to bit devices in 16-point units.	64 words (1024 points)
			Writes to word devices in 1-point units.	64 points
RR	52H 52H	Random read in word units*1	Reads multiple different bit devices in 16-point units.	64 words (1024 points)
			Reads multiple different word devices in 1-point units.	64 points
RW	52H 57H	Random write in word units*1	Writes to multiple different bit devices in 16-point units.	64 words (1024 points)
			Writes to multiple different word devices in 1-point units.	64 points
TR	54H 52H	Read clock data	Reads the clock data of the GOT.	-
TS	54H 53H	Set clock data	Sets the clock data of the GOT.	-

*1 Mixed specification of bit devices and word devices is also possible.

■ List of commands for formats 3 to 6 (A compatible 1C frame)

Command		Command name	Description	Max. number of points processed
Symbol	ASCII code			
BR JR	42H 52H 4AH 52H	Batch read in bit units	Reads bit devices in 1-point units.	64 points
WR QR	57H 52H 51H 52H	Batch read in word units	Reads bit devices in 16-point units. *3	64 words (1024 points)
			Reads word devices in 1-point units.	64 points
BW JW	42H 57H 4AH 57H	Batch write in bit units	Writes to bit devices in 1-point units.	64 points
WW QW	57H 57H 51H 57H	Batch read in word units	Writes to bit devices in 16-point units. *3	64 words (1024 points)
			Writes to word devices in 1-point units.	64 points
BT JT	42H 54H 4AH 54H	Test in bit units (random write)	Writes to multiple different bit devices in 1-point units.	64 points
WT QT	57H 54H 51H 54H	Test in word units (random write)	Writes to multiple different bit devices in 16-point units. *3	64 words (1024 points)
			Writes to multiple different word devices in 1-point units.	64 points
TR*2	54H 52H	Read clock data	Reads the clock data of the GOT.	-
TS*2	54H 53H	Set clock data	Sets the clock data of the GOT.	-

*2 This is a dedicated command of GOT for the microcomputer connection.
*3 Specifies the address of bit devices in 16-point units. (Example: M0, M16, M32, etc.)

■ Command lists for formats 7 to 10 (QnA compatible 3C/4C frame)

Command	Sub-command	Command name	Description	Max. number of points processed
0401	0001	Batch read in bit units	Reads bit devices in 1-point units.	64 points
0401	0000	Batch read in word units	Reads bit devices in 16-point units.*3	64 words (1024 points)
			Reads word devices in 1-point units.	64 points
1401	0001	Batch write in bit units	Writes to bit devices in 1-point units.	64 points
1401	0000	Batch read in word units	Writes to bit devices in 16-point units.*3	64 words (1024 points)
			Writes to word devices in 1-point units.	64 points
0403	0000	Random read in word units*1	Reads multiple different bit devices in 16-point and 32-point units.*3	64 words (1024 points)
			Reads multiple different word devices in 1-point and 2-point units.	64 points
1402	0001	Random write in bit units	Writes to multiple different bit devices in 1-point units.	64 points
1402	0000	Random write in word units*1	Writes to multiple different bit devices in 16-point and 32-point units.*3	64 words (1024 points)
			Writes to multiple different word devices in 1-point and 2-point units.	64 points
0406	0000	Multiple block batch read	Reads multiple blocks. A bit device (16 bits for 1 point) or a word device (1 word for 1 point) is regarded as one block.*3	64 points
1406	0000	Multiple block batch write	Writes multiple blocks. A bit device (16 bits for 1 point) or a word device (1 word for 1 point) is regarded as one block.*3	64 points
1901*2	0000	Read clock data	Reads the clock data of the GOT.	-
0901*2	0000	Set clock data	Sets the clock data of the GOT.	-

*1 Mixed specification of bit devices and word devices is also possible.
*2 This is a dedicated command of GOT for the microcomputer connection.
*3 Specifies the address of bit devices in 16-point units. (Example: M0, M16, M32, etc.)

■ List of commands for formats 11 to 13 (Digital Electronics Corporation's memory link method)

Command		Command name	Description	Max. number of points processed
Symbol	ASCII code			
R	52H	Batch read in word units	Reads bit devices in 16-point units.	64 words (1024 points)
			Reads word devices in 1-point units.	64 points
W	57H	Batch write in word units	Writes to bit devices in 16-point units.	64 words (1024 points)
			Writes to word devices in 1-point units.	64 points
I	49H	Interrupt inquiry	Issues an interrupt inquiry. (format 13 only)	-
N*4	4DH	Read clock data	Reads the clock data of the GOT.	-
M*4	4EH	Set clock data	Sets the clock data of the GOT.	-

*4 This is a dedicated command of GOT for the microcomputer connection.

■ List of commands for formats 14, 15 (GOT-F900 series microcomputer connection)

Command		Command name	Description	Max. number of points processed
Symbol	ASCII code			
0	30H	Batch read (w/out station No.)	Reads bit devices in byte units.	255bytes (2040 points)
			Reads word devices in byte units.	255bytes (127 points)
A	41H	Batch read (w/station No.)	Reads bit devices in byte units.	255bytes (2040 points)
			Reads word devices in byte units.	255bytes (127 points)
1	31H	Batch write (w/out station No.)	Writes to bit devices in byte units.	255bytes (2040 points)
			Writes to word devices in byte units.	255bytes (127 points)
B	42H	Batch write (w/station No.)	Writes to bit devices in byte units.	255bytes (2040 points)
			Writes to word devices in byte units.	255bytes (127 points)
3	33H	Multi-point write in bit units (w/out station No.)	Writes bit patterns (bit ON/OFF, inversion, direct specification) in 1-point units (8 bits for 1 point) to a specified device.	70bytes (560 points)
D	44H	Multi-point write in bit units (w/station No.)		
4	34H	Fill command (w/out station No.)	Writes the same value to a range of specified devices.	-
E	45H	Fill command (w/station No.)		
5	35H	Set clock data (w/out station No.)	Sets the clock data of the GOT.	-
F	46H	Set clock data (w/station No.)		
6	36H	Read clock data (w/out station No.)	Reads the clock data of the GOT.	-
G	47H	Read clock data (w/station No.)		

61.5.3 Formats 1, 2 (GOT-A900 Series microcomputer connection)

■ Basic format of data communication

<table>
<tr><th>Item</th><th>Message Formats</th></tr>
<tr><td>Request message
(host ⟶ GOT)</td><td> 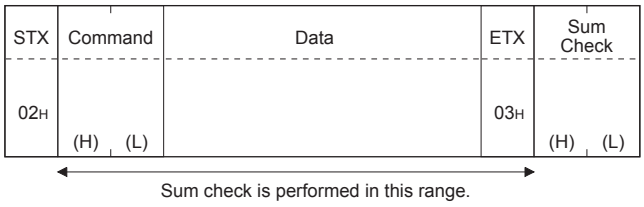
</td></tr>
<tr><td>Response message during normal communication
(GOT ⟶ host)</td><td>(1) During processing of read commands
 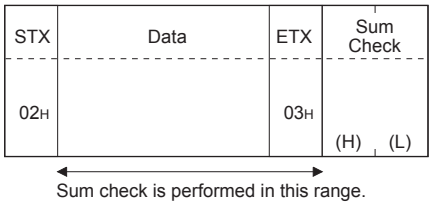

(2) During processing of write commands
 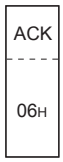
</td></tr>
<tr><td>Response message during faulty communication
(GOT ⟶ host)</td><td>(format 1: GOT-A900 Series microcomputer connection (format 1))
 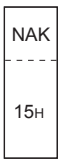
</td><td>(format 2: GOT-A900 Series microcomputer connection (format 2))
 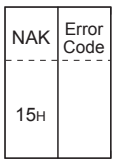
</td></tr>
<tr><td>During interrupt output</td><td>(format 1: GOT-A900 Series microcomputer connection (format 1))
 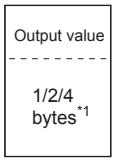
</td><td>(format 2: GOT-A900 Series microcomputer connection (format 2))
 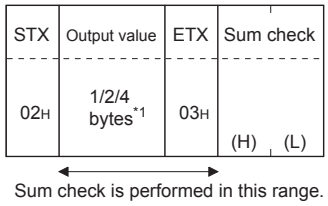
</td></tr>
</table>

*1 Set the number of interrupt data bytes at "Communication Details Settings" on GT Designer3.
For the setting of the number of interrupt data bytes, refer to the following.

☞ 61.6.1 Setting communication interface (Communication settings)

■ Details of data items in message format

POINT

Data code during communication

Communication is performed in ASCII code. (excluding interrupt output)

(1) Control codes

Symbol	ASCII code	Description
STX	02H	Start of Text (start marker of message frame)
ETX	03H	End of Text (end marker of message frame)
EOT	04H	End of Transmission
ENQ	05H	Enquiry (start of enquiry)
NAK	15H	Negative ACK (error response)
ACK	06H	Acknowledge (write completion response)
LF	0AH	Line Feed
CL	0CH	Clear
CR	0DH	Carriage Return

(2) Command

Specifies the contents to access from the host to GOT.
The command is converted to a 2-digit ASCII code (Hex) and transmitted from the upper digit.
For details of the commands that can be used, refer to the following.

☞ 61.5.2 List of commands

(3) Address

Specifies the head No. of the device data to be read/written.
The address notated in decimal is converted to a 4-digit ASCII code (Hex) and transmitted from the upper digit.
For details of the device range that can be accessed, refer to the following.

☞ 61.4 Device Data Area

(4) Number of points

Specifies the number of device data to be read/written. (Setting range: 1 to 64)
Data notated in decimal is converted to a 2-digit ASCII code (Hex) and transmitted from the upper digit.

(5) Year, month, day, hour, minute, second and day of the week data

Specifies year, month, day, hour, minute, second, and day of the week to be read/set to the GOT clock data.
Data notated in decimal is converted to a 2-digit ASCII code (Hex) and transmitted from the upper digit.

☞ ■ Message format(5)Read clock data (TR) command

☞ ■ Message format(6)Set clock data (TS) command

(6) Data

Specifies the data to read from/write to the specified device data. (word unit)
The address notated in hexadecimal is converted to a 4-digit ASCII code (Hex) and transmitted from the upper digit.

(7) Error code

This is the response message at faulty communication appended with error contents.
Error code is transmitted in 1 byte.
For details of the error codes generated in format 2 (GOT-A900 Series microcomputer connection (format 2)), refer to the following:

☞ ■ Error code list

(8) Sum check code

The sum check code is obtained by converting the lower 1 byte (8 bits) of the result (sum), after having added the sum check target data as binary data, to 2-digit ASCII code (Hex).

STX	Command		Address				Number of points		ETX	Sum Check	
	R	D	0	1	0	0	0	2		B	C
02H	52H	44H	30H	31H	30H	30H	30H	32H	03H	42H	43H
	(H)	(L)	(H)	—	—	(L)	(H)	(L)		(H)	(L)

Sum check is performed in this range.

52H + 44H + 30H + 31H + 30H + 30H + 30H + 32H + 03H = 1BCH

■ Message Formats

(1) Batch read in word units (RD) command

(a) When reading a word device

The following shows an example of reading the two points of the virtual devices D100 and D101. (Assuming D100=0102H, D101=0304H are stored.)

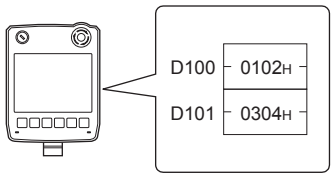

Item	Message Formats
Request message (host → GOT)	STX | Command (R D) | Address (0 1 0 0) | Number of points (0 2) | ETX | Sum Check (B C) 02H | 52H 44H | 30H 31H 30H 30H | 30H 32H | 03H | 42H 43H (H) (L) | (H) — — (L) | (H) (L) | (H) (L) Sum check is performed in this range.
Response message during normal communication (GOT → host)	STX | Data 1 (D100) (0 1 0 2) | Data 2 (D101) (0 3 0 4) | ETX | Sum Check (8 D) 02H | 30H 31H 30H 32H | 30H 33H 30H 34H | 03H | 38H 44H (H) — — (L) | (H) — — (L) | (H) (L) Sum check is performed in this range.
Response message during faulty communication (GOT → host)	(format 1: GOT-A900 Series microcomputer connection (format 1)) NAK 15H (format 2: GOT-A900 Series microcomputer connection (format 2)) NAK | Error code 15H | 06H The above is a case where the sum check error (06H) has occurred.

(b) When reading a bit device

The following shows an example of reading the two points of the virtual devices M0 to M31.
(Assuming M0="1" and M31="1" are stored.)

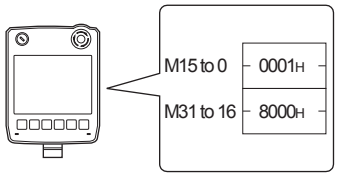

Item	Message Formats
Request message (host → GOT)	STX: 02H Command: R 52H (H), D 44H (L) Address: 8 38H (H), 3 33H, 2 32H, 0 30H (L) Number of points: 0 30H (H), 2 32H (L) ETX: 03H Sum Check: C 43H (H), 8 38H (L) Sum check is performed in this range.
Response message during normal communication (GOT → host)	Sum check is performed in this range. STX: 02H Data 1 (M15 to 0): 0 30H (H), 0 30H, 0 30H, 1 31H (L) Data 2 (M31 to 16): 8 38H (H), 0 30H, 0 30H, 0 30H (L) ETX: 03H Sum Check: 8 38H (H), C 43H (L) 0000000000000011 0000000000000000 M15 M14 M13 M12 M11 M10 M9 M8 M7 M6 M5 M4 M3 M2 M1 M0 M31 M30 M29 M28 M27 M26 M25 M24 M23 M22 M21 M20 M19 M18 M17 M16
Response message during faulty communication (GOT → host)	(format 1: GOT-A900 Series microcomputer connection (format 1)) NAK: 15H (format 2: GOT-A900 Series microcomputer connection (format 2)) NAK: 15H, Error code: 06H The above is a case where the sum check error (06H) has occurred.

(2) Batch write in word units (WD) command

(a) When writing to a word device

The following shows as example of writing "0064H" and "0065H" to virtual devices D100 and D101.

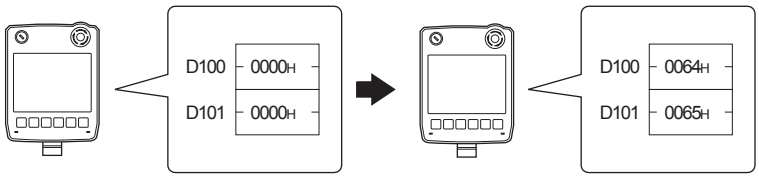

Before execution After execution

Item	Message Formats
Request message (host → GOT)	STX: 02H Command: W (57H) D (44H) Address: 0 (30H) 1 (31H) 0 (30H) 0 (30H) (H) — — (L) Number of points: 0 (30H) 2 (32H) (H) (L) Data 1(D100): 0 (30H) 0 (30H) 6 (36H) 4 (34H) (H) — — (L) Data 2 (D101): 0 (30H) 0 (30H) 6 (36H) 5 (35H) (H) — — (L) ETX: 03H Sum Check: 5 (35H) 6 (36H) (H) (L) Sum check is performed in this range.
Response message during normal communication (GOT → host)	ACK: 06H
Response message during faulty communication (GOT → host)	(format 1: GOT-A900 Series microcomputer connection (format 1)) NAK: 15H (format 2: GOT-A900 Series microcomputer connection (format 2)) NAK: 15H, Error code: 06H The above is a case where the sum check error (06H) has occurred.

(b) When writing to a bit device

The following shows an example of writing "1"s to virtual devices M0 and M31.

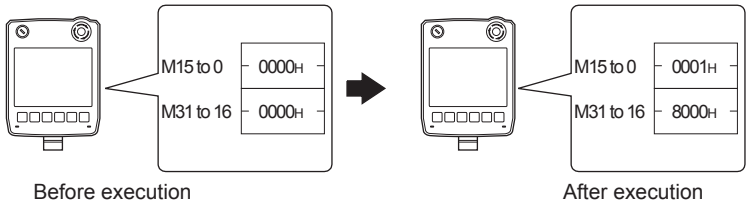

Before execution　　After execution

Item	Message Formats
Request message (host ⟶ GOT)	Sum check is performed in this range. STX | Command | Address | Number of points | Data 1 (M15 to 0) | Data 2 (M31 to 16) | ETX | Sum Check 02H | W 57H (H) D 44H (L) | 8 38H (H) 3 33H – 2 32H – 0 30H (L) | 0 30H (H) 2 32H (L) | 0 30H (H) 0 30H – 0 30H – 1 31H (L) | 8 38H (H) 0 30H – 0 30H – 0 30H (L) | 03H | 5 35H (H) 6 36H (L) 0000000000000001 0000000000000000 MMMMMMMMMMMMMMMM MMMMMMMMMMMMMMMM 1111111987654321 0332222222222211111 5432100 1098765432109876
Response message during normal communication (GOT ⟶ host)	ACK 06H
Response message during faulty communication (GOT ⟶ host)	(format 1: GOT-A900 Series microcomputer connection (format 1)) NAK 15H (format 2: GOT-A900 Series microcomputer connection (format 2)) NAK | Error code 15H | 06H The above is a case where the sum check error (06H) has occurred.

(3) Random read in word units (RR) command

The following shows an example of reading the two points of the virtual devices D100 and M0 to M15.
(Assuming D100=0064H, M0=1 are stored.)

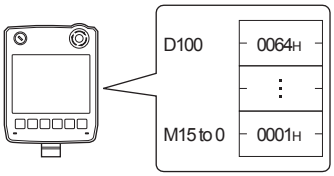

Item	Message Formats
Request message (host → GOT)	STX: 02H Command: R (52H) R (52H) Address 1: 0 (30H) 1 (31H) 0 (30H) 0 (30H) Address 2: 8 (38H) 3 (33H) 2 (32H) 0 (30H) ETX: 03H Sum Check: 3 (33H) 5 (35H) Sum check is performed in this range.
Response message during normal communication (GOT → host)	Sum check is performed in this range. STX: 02H Data 1 (D100): 0 (30H) 0 (30H) 6 (36H) 4 (34H) Data 2 (M15 to 0): 0 (30H) 0 (30H) 0 (30H) 1 (31H) ETX: 03H Sum Check: 8 (38H) E 45H 0 0 0 0 0 0 0 0 0 0 0 0 0 0 0 1 MMMMMMMMMMMMMMMM 1111119876543210 543210
Response message during faulty communication (GOT → host)	(format 1: GOT-A900 Series microcomputer connection (format 1)) NAK: 15H (format 2: GOT-A900 Series microcomputer connection (format 2)) NAK: 15H, Error code: 06H The above is a case where the sum check error (06H) has occurred.

(4) Random write in word units (RW) command

The following shows an example of writing "0064H" and "1" to virtual devices D100 and M0, respectively.

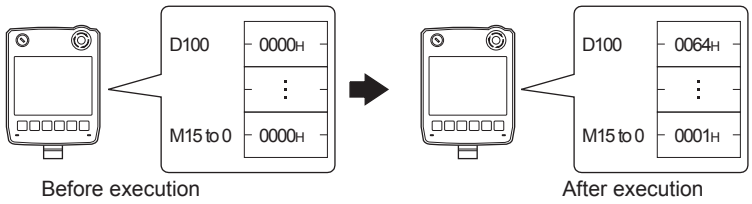

Item	Message Formats
Request message (host ⟶ GOT)	STX: 02H Command: R 52H (H), W 57H (L) Following*1 ETX: 03H Sum Check: C 43H (H), 5 35H (L) Sum check is performed in this range. *1 Address 1: 0 30H (H), 1 31H, 0 30H, 0 30H (L) Data 1 (D100): 0 30H (H), 0 30H, 6 36H, 4 34H (L) Address 2: 8 38H (H), 3 33H, 2 32H, 0 30H (L) Data 2 (M15 to 0): 0 30H (H), 0 30H, 0 30H, 1 31H (L) 0 0 0 0 0 0 0 0 0 0 0 0 0 0 0 1 M M M M M M M M M M M M M M M M 1 1 1 1 1 1 1 9 8 7 6 5 4 3 2 1 0 5 4 3 2 1 0
Response message during normal communication (GOT ⟶ host)	ACK: 06H
Response message during faulty communication (GOT ⟶ host)	(format 1: GOT-A900 Series microcomputer connection (format 1)) NAK: 15H (format 2: GOT-A900 Series microcomputer connection (format 2)) NAK: 15H, Error code: 06H The above is a case where the sum check error (06H) has occurred.

(5) Read clock data (TR) command

The following shows an example of reading the clock data of GOT.

(Assuming that the clock data of GOT has been set to "2004, June 1, 18:46:49, Tuesday".)

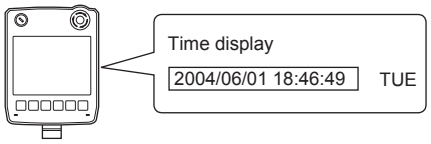

<table>
<tr><th>Item</th><th>Message Formats</th></tr>
<tr><td>Request message
(host → GOT)</td><td>
<table>
<tr><td>STX</td><td colspan="2">Command</td><td>ETX</td><td colspan="2">Sum Check</td></tr>
<tr><td></td><td>T</td><td>R</td><td></td><td>A</td><td>9</td></tr>
<tr><td>02H</td><td>54H</td><td>52H</td><td>03H</td><td>41H</td><td>39H</td></tr>
<tr><td></td><td>(H)</td><td>(L)</td><td></td><td>(H)</td><td>(L)</td></tr>
</table>
Sum check is performed in this range.
</td></tr>
<tr><td>Response message during normal communication
(GOT → host)</td><td>
<table>
<tr><td>STX</td><td colspan="2">Year data</td><td colspan="2">Month data</td><td colspan="2">Day data</td><td colspan="2">Hour data</td><td colspan="2">Minute data</td><td colspan="2">Second data</td><td colspan="2">Day-of-week data</td><td>ETX</td><td colspan="2">Sum Check</td></tr>
<tr><td></td><td>0</td><td>4</td><td>0</td><td>6</td><td>0</td><td>1</td><td>1</td><td>8</td><td>4</td><td>6</td><td>4</td><td>9</td><td>0</td><td>2</td><td></td><td>D</td><td>0</td></tr>
<tr><td>02H</td><td>30H</td><td>34H</td><td>30H</td><td>36H</td><td>30H</td><td>31H</td><td>31H</td><td>38H</td><td>34H</td><td>36H</td><td>34H</td><td>39H</td><td>30H</td><td>32H</td><td>03H</td><td>44H</td><td>30H</td></tr>
<tr><td></td><td>(H)</td><td>(L)</td><td>(H)</td><td>(L)</td><td>(H)</td><td>(L)</td><td>(H)</td><td>(L)</td><td>(H)</td><td>(L)</td><td>(H)</td><td>(L)</td><td>(H)</td><td>(L)</td><td></td><td>(H)</td><td>(L)</td></tr>
</table>
Sum check is performed in this range.
</td></tr>
<tr><td>Response message during faulty communication
(GOT → host)</td><td>
(format 1: GOT-A900 Series microcomputer connection (format 1))
<table>
<tr><td>NAK</td></tr>
<tr><td>15H</td></tr>
</table>
(format 2: GOT-A900 Series microcomputer connection (format 2))
<table>
<tr><td>NAK</td><td>Error code</td></tr>
<tr><td>15H</td><td>06H</td></tr>
</table>
The above is a case where the sum check error (06H) has occurred.
</td></tr>
</table>

(6) Set clock data (TS) command

The following shows an example of setting the clock data of GOT.
(Assuming the clock data of GOT is to be set to "2004, June 1, 18:46:49 Tuesday".)

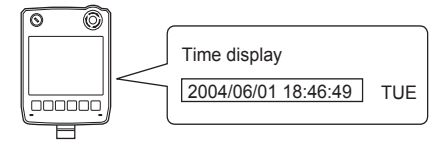

After execution

<table>
<tr><th>Item</th><th>Message Formats</th></tr>
<tr><td>Request message
(host ⟶ GOT)</td><td>
<table>
<tr><th>STX</th><th colspan="2">Command</th><th colspan="2">Year data</th><th colspan="2">Month data</th><th colspan="2">Day data</th><th colspan="2">Hour data</th><th colspan="2">Minute data</th><th colspan="2">Second data</th><th colspan="2">Day-of-week data</th><th>ETX</th><th colspan="2">Sum Check</th></tr>
<tr><td>02H</td><td>T
54H
(H)</td><td>S
53H
(L)</td><td>0
30H
(H)</td><td>4
34H
(L)</td><td>0
30H
(H)</td><td>6
36H
(L)</td><td>0
30H
(H)</td><td>1
31H
(L)</td><td>1
31H
(H)</td><td>8
38H
(L)</td><td>4
34H
(H)</td><td>6
36H
(L)</td><td>4
34H
(H)</td><td>9
39H
(L)</td><td>0
30H
(H)</td><td>2
32H
(L)</td><td>03H</td><td>7
37H
(H)</td><td>7
37H
(L)</td></tr>
</table>
Sum check is performed in this range.
</td></tr>
<tr><td>Response message during normal communication
(GOT ⟶ host)</td><td>
<table>
<tr><th>ACK</th></tr>
<tr><td>06H</td></tr>
</table>
</td></tr>
<tr><td>Response message during faulty communication
(GOT ⟶ host)</td><td>
(format 1: GOT-A900 Series microcomputer connection (format 1))
<table>
<tr><th>NAK</th></tr>
<tr><td>15H</td></tr>
</table>
(format 2: GOT-A900 Series microcomputer connection (format 2))
<table>
<tr><th>NAK</th><th>Error code</th></tr>
<tr><td>15H</td><td>06H</td></tr>
</table>
The above is a case where the sum check error (06H) has occurred.
</td></tr>
</table>

POINT

When a wrong day of the week has been set by the clock data setting command

If a wrong day of the week is set by the clock data setting commands, the clock data will differ from the time displayed on the utility.

Example: When June 1, 2004 (Thursday) is set by the clock data setting command (the actual day of the week is Tuesday)
Tuesday (TUE) will be displayed on the utility time display.

(7) In the case of interrupt outputs

The following shows an example of an interrupt output when data are written to the interrupt output devices (D13 and D14).

(Assuming that "3139H" is written to D13 and "AA55H" to D14.)

Example: When the number of interrupt data bytes is 2

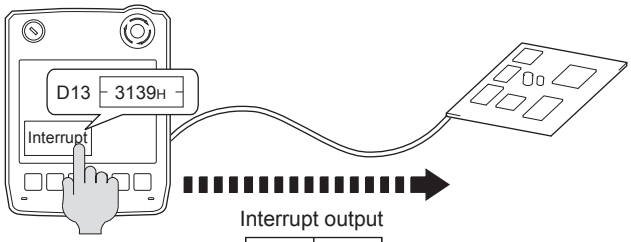

Interrupt output

Output value 1	Output value 2
31H	39H

Item	Message Formats
Interrupt output (GOT → host)	(1) When [Interrupt Data Byte] in "Communication Detail Settings" is set to "1 byte"

(format 1: in the case of GOT-A900 Series microcomputer connection (format 1))

Output value 1
39H

(format 2: in the case of GOT-A900 Series microcomputer connection (format 2))

STX	Output value 1	ETX	Sum check	
			3	C
02H	39H	03H	33H	43H
			(H)	(L)

Sum check is performed in this range.

(2) When [Interrupt Data Byte] in "Communication Detail Settings" is set to "2 byte"

(format 1: in the case of GOT-A900 Series microcomputer connection (format 1))

Output value 1	Output value 2
31H	39H

(format 2: in the case of GOT-A900 Series microcomputer connection (format 2))

STX	Output value 1	Output value 2	ETX	Sum check	
				6	D
02H	31H	39H	03H	36H	44H
				(H)	(L)

Sum check is performed in this range.

(3) When [Interrupt Data Byte] in "Communication Detail Settings" is set to "4 byte"

(format 1: in the case of GOT-A900 Series microcomputer connection (format 1))

Output value1	Output value2	Output value3	Output value4
AAH	55H	31H	39H

(format 2: in the case of GOT-A900 Series microcomputer connection (format 2))

STX	Output value1	Output value2	Output value3	Output value4	ETX	Sum Check	
						6	C
02H	AAH	55H	31H	39H	03H	36H	43H
						(H)	(L)

Sum check is performed in this range.

POINT

Interrupt output

- To disable the interrupt output, turn ON SM52 (interrupt code output disable flag). (☞ 61.4.6 SM devices)
- To issue interrupts, set the data length to "8 bits" at "Communication Detail Settings". (☞ 61.6.1 Setting communication interface (Communication settings))
- When "7 bits" is set, the MSB (8th bit) is ignored. (Example: FFH → 7FH)

■ Error code list

In the case of format 2 (GOT-A900 series microcomputer connection (format 2)), the error contents (error code) are appended to the response message during faulty communication.
The following shows error code, error contents, cause, and measures.

Error code	Description	Measures
06H	Sum check error The sum check code created from received data differs from the sum check code in the receive data.	• Review the contents of the message to transmit.
10H	Command error An unsupported command was used.	• Review the contents of the message to transmit. • Check the commands in the message. (☞ 61.5.2 List of commands)
11H	Message length error The upper limit of the data length that can be received by the GOT has been exceeded.	• Review the contents of the message to transmit. • Check the data length of the message. (data length of the data section, etc.)
12H	Communication message error EXT was not found within the upper limit of the receive buffer.	• Check the communication cable and communication module attachment. • Check the settings of "Communication Detail Settings". • Review the contents of the message to transmit.
15H	Clock data setting error The setting value of the clock data has error.	• Review the contents of the message to transmit. • Check whether the non-existent data is set (e.g. setting "07" at the day of the week) as clock data.
7AH	Address error The start address of the read/write device is out of range.	• Review the contents of the message to transmit. • Check the devices that can be used and the device ranges. (☞ 61.4 Device Data Area)
7BH	Exceeded number of points error The read/write range exceeded the device range.	

■ Precautions

(1) Batch reading/writing crossing over different devices
When using the batch read (RD) or batch write (WD) command, do not batch read/write crossing over the different devices.
This will cause an error response.

(2) Storage order for 32-bit data
To use the program of GOT-A900 series with [32bit Order] setting to GOT1000 series, set [HL Order] to [32bit Order] for [Communication Detail Settings] when 32-bit data is set for GOT-A900 series.
With setting [LH Order], the order of upper bits and lower bits are reversed when the GOT displays and writes 32-bit data.

61.5.4 Formats 3 to 6 (A compatible 1C frame)

■ Basic format of data communication

This is the same message format as when communication is performed using the dedicated protocol (A compatible 1C frame) of the A Series computer link module.
For details of the basic format of data communication, refer to the following manual:

☞ MELSEC-Q/L MELSEC Communication Protocol Reference Manual

This section describes items whose settings differ from the dedicated protocol of the A Series computer link modules, and the dedicated commands for a GOT microcomputer connection.

Example: Request message for the batch read in word units (QR) command in format 4 (A compatible 1C frame (format 2))

Character A section

ENQ	Block No.		Station No.		PLC No.		Command		Wait	Address							Number of points		Sum Check	
	0	0	0	0	0	0	Q	R	0	D	0	0	0	1	0	0	0	2	B	A
05H	30H	30H	30H	30H	30H	30H	51H	52H	30H	44H	30H	30H	30H	31H	30H	30H	30H	32H	42H	41H
	(H)	(L)	(H)	(L)	(H)	(L)	(H)	(L)		(H)	–	–	–	–	–	(L)	(H)	(L)	(H)	(L)

Sum check is performed in this range.

■ Details of data items in message format

POINT

Data code during communication

Communication is performed in ASCII code.

(1) Block No, PLC No.
Ignored in a microcomputer connection of the GOT.
Specify "00".
"00" is converted to a 2-digit ASCII code (Hex) and transmitted from the upper digit.

(2) Station No.
Station No. is used to identify the GOT with which the host communicates. (Setting range: 0 to 31)
Data notated in decimal is converted to a 2-digit ASCII code (Hex) and transmitted from the upper digit.
The GOT processes only commands whose station No. matches the "Host Address (0 to 31)" set at "Communication Detail Settings". (The message of command whose station No. does not match is ignored.)
For setting method of "Communication Detail Settings", refer to the following.

☞ 61.6.1 Setting communication interface (Communication settings)

(3) Command
Specifies the contents to access from the host to GOT.
The command is converted to a 2-digit ASCII code (Hex) and transmitted from the upper digit.
For details of the commands that can be used, refer to the following.

☞ 61.5.2 List of commands

(4) Address

Specifies the head No. of the device data to be read/written.
The data annotated in decimal is converted to a 5- or 7-digit ASCII code (Hex) and transmitted from the upper digit.
For details of the device range that can be accessed, refer to the following.

☞ 61.4 Device Data Area

(5) Number of points

Specifies the number of device data to be read/written. (Setting range: 1 to 40H)
The address notated in hexadecimal is converted to a 2-digit ASCII code (Hex) and transmitted from the upper digit.

(6) Year, month, day, hour, minute, second and day of the week data

Specifies year, month, day, hour, minute, second, and day of the week to be read/set to the GOT clock data.
Data notated in decimal is converted to a 2-digit ASCII code (Hex) and transmitted from the upper digit.

☞ ■ (1) Read clock data (TR) command

☞ ■ (2) Set clock data (TS) command

(7) Error code

This is the response message at faulty communication appended with error contents.
The address notated in hexadecimal is converted to a 2-digit ASCII code (Hex) and transmitted from the upper digit.
For details of error codes generated in formats 3 to 6 (A compatible 1C frame), refer to the following:

☞ ■ Error code list

POINT

When connecting a microcomputer, etc. that uses the dedicated protocol of the A series computer link module with the GOT

When connecting a microcomputer, etc. that uses the dedicated protocol of the A series computer link module with the GOT, correct the commands to use and the device range according to the specifications of GOT.

■ Message Formats

The following shows the message format of the dedicated commands for a microcomputer connection of GOT.

(1) Read clock data (TR) command

The following shows an example of reading the clock data of GOT.
(Assuming that the clock data of GOT has been set to "2004, June 1, 18:46:49, Tuesday".)

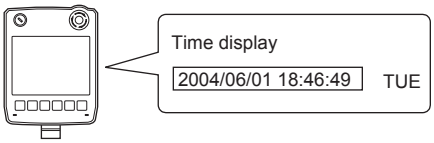

<table>
<tr><th>Item</th><th>Message Formats</th></tr>
<tr><td>Request message
(host → GOT)</td><td>Example: Format 3 (A compatible 1C frame (format 1))
<table>
<tr><td>ENQ</td><td colspan="2">Station No.</td><td colspan="2">PLC No.</td><td colspan="2">Command</td><td>Wait</td><td colspan="2">Sum Check</td></tr>
<tr><td></td><td>0</td><td>0</td><td>0</td><td>0</td><td>T</td><td>R</td><td>0</td><td>9</td><td>6</td></tr>
<tr><td>05H</td><td>30H</td><td>30H</td><td>30H</td><td>30H</td><td>54H</td><td>52H</td><td>30H</td><td>39H</td><td>36H</td></tr>
<tr><td></td><td>(H)</td><td>(L)</td><td>(H)</td><td>(L)</td><td>(H)</td><td>(L)</td><td></td><td>(H)</td><td>(L)</td></tr>
</table>
Sum check is performed in this range.</td></tr>
<tr><td>Response message during normal communication
(GOT → host)</td><td>Example: Format 3 (A compatible 1C frame (format 1))
Character B section
<table>
<tr><td>STX</td><td colspan="2">Station No.</td><td colspan="2">PLC No.</td><td></td><td>ETX</td><td colspan="2">Sum Check</td></tr>
<tr><td></td><td>0</td><td>0</td><td>0</td><td>0</td><td rowspan="3">Following*1</td><td></td><td>9</td><td>0</td></tr>
<tr><td>02H</td><td>30H</td><td>30H</td><td>30H</td><td>30H</td><td>03H</td><td>39H</td><td>30H</td></tr>
<tr><td></td><td>(H)</td><td>(L)</td><td>(H)</td><td>(L)</td><td></td><td>(H)</td><td>(L)</td></tr>
</table>
Sum check is performed in this range.
*1
<table>
<tr><td></td><td colspan="2">Year data</td><td colspan="2">Month data</td><td colspan="2">Day data</td><td colspan="2">Hour data</td><td colspan="2">Minute data</td><td colspan="2">Second data</td><td colspan="2">Day-of-week data</td></tr>
<tr><td></td><td>0</td><td>4</td><td>0</td><td>6</td><td>0</td><td>1</td><td>1</td><td>8</td><td>4</td><td>6</td><td>4</td><td>9</td><td>0</td><td>2</td></tr>
<tr><td></td><td>30H</td><td>34H</td><td>30H</td><td>36H</td><td>30H</td><td>31H</td><td>31H</td><td>38H</td><td>34H</td><td>36H</td><td>34H</td><td>39H</td><td>30H</td><td>32H</td></tr>
<tr><td></td><td>(H)</td><td>(L)</td><td>(H)</td><td>(L)</td><td>(H)</td><td>(L)</td><td>(H)</td><td>(L)</td><td>(H)</td><td>(L)</td><td>(H)</td><td>(L)</td><td>(H)</td><td>(L)</td></tr>
</table></td></tr>
<tr><td>Response message during faulty communication
(GOT → host)</td><td>Example: Format 3 (A compatible 1C frame (format 1))
<table>
<tr><td>NAK</td><td colspan="2">Station No.</td><td colspan="2">PLC No.</td><td colspan="2">Error code</td></tr>
<tr><td></td><td>0</td><td>0</td><td>0</td><td>0</td><td>0</td><td>5</td></tr>
<tr><td>15H</td><td>30H</td><td>30H</td><td>30H</td><td>30H</td><td>30H</td><td>35H</td></tr>
<tr><td></td><td>(H)</td><td>(L)</td><td>(H)</td><td>(L)</td><td>(H)</td><td>(L)</td></tr>
</table>
The above is the case where an overrun error (05H) has occurred.</td></tr>
</table>

(2) Set clock data (TS) command

The following shows an example of setting the clock data of GOT.
(Assuming the clock data of GOT is to be set to "2004, June 1, 18:46:49 Tuesday".)

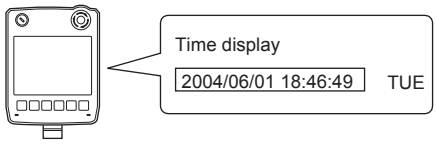

Item	Message Formats
Request message (host ⟶ GOT)	Example: Format 3 (A compatible 1C frame (format 1))
Response message during normal communication (GOT ⟶ host)	Example: Format 3 (A compatible 1C frame (format 1))
Response message during faulty communication (GOT ⟶ host)	Example: Format 3 (A compatible 1C frame (format 1))

Character C section

ENQ	Station No.		PLC No.		Command		Wait	Following*1	Sum Check	
	0	0	0	0	T	S	0		6	4
05H	30H	30H	30H	30H	54H	53H	30H		36H	34H
	(H)	(L)	(H)	(L)	(H)	(L)			(H)	(L)

Sum check is performed in this range.

*1

Year data		Month data		Day data		Hour data		Minute data		Second data		Day-of-week data	
0	4	0	6	0	1	1	8	4	6	4	9	0	2
30H	34H	30H	36H	30H	31H	31H	38H	34H	36H	34H	39H	30H	32H
(H)	(L)	(H)	(L)	(H)	(L)	(H)	(L)	(H)	(L)	(H)	(L)	(H)	(L)

ACK	Station No.		PLC No.	
	0	0	0	0
06H	30H	30H	30H	30H
	(H)	(L)	(H)	(L)

NAK	Station No.		PLC No.		Error code	
	0	0	0	0	0	5
15H	30H	30H	30H	30H	30H	35H
	(H)	(L)	(H)	(L)	(H)	(L)

The above is the case where an overrun error (05H) has occurred.

POINT

When a wrong day of the week has been set by the clock data setting command

If a wrong day of the week is set by the clock data setting commands, the clock data will differ from the time displayed on the utility.

Example: When June 1, 2004 (Thursday) is set by the clock data setting command (the actual day of the week is Tuesday)

Tuesday (TUE) will be displayed on the utility time display.

■ Error code list

The following shows error code, error contents, cause, and measures.

Error code	Description	Measures
01H	Parity error The parity bit does not match.	• Check the communication cable and communication module attachment. • Check the settings of "Communication Detail Settings". • Match the GOT and host transmission settings.
02H	Sum check error The sum check code created from received data differs from the sum check code in the receive data.	• Review the contents of the message to transmit.
03H	Protocol error Received a message that does not follow the control procedure of the format set at "Communication Detail Settings".	• Check the settings of "Communication Detail Settings". • Review the contents of the message to transmit.
05H	Overrun error The next data was transmitted from the host before GOT completes the processing of the data received.	• Check the settings of "Communication Detail Settings". • Decrease the transmission speed.
06H	Character section error The character section specification error. •The method of specifying the character section is wrong. •The specified command has error. •The number of points of the processing requests exceeds the allowable range. •A non-existent device has been specified. •The setting value of the clock data has error.	• Review the contents of the message to transmit. • Check the commands in the message. (☞ 61.5.2 List of commands) • Check the devices that can be used and the device ranges. (☞ 61.4 Device Data Area) • Check whether the non-existent data is set (e.g. setting "07" at the day of the week) as clock data.
07H	Character error A character other than "A to Z", "0 to 9", space, and control codes has been received.	• Review the contents of the message to transmit.

61.5.5 Formats 7 to 10 (QnA compatible 3C/4C frame)

■ Basic format of data communication

This is the same message format as when communication is performed using the MC protocol (QnA compatible 3C/4C frame) of the Q/QnA Series serial communication module.
For details of the basic format of data communication, refer to the following manual:

☞ MELSEC-Q/L MELSEC Communication Protocol Reference Manual

This section describes items whose settings differ from the MC protocol of the Q/QnA Series serial communication module, and the dedicated commands for a GOT microcomputer connection.

Example: Request message for the batch read in word units (0401) command in format 8 (QnA compatible 4C frame (format 2))

ENQ	Block No.		Frame ID No.		Station No.		Network No.		PLC No.		Request destination module I/O No.				Request destination module station No.		Host Address No.		Following*1	Sum check	
	0	0	F	8	0	0	0	0	0	0	0	0	0	0	0	0	0	0		B	A
05H	30H	30H	46H	38H	30H	30H	30H	30H	30H	30H	30H	30H	30H	30H	30H	30H	30H	30H		42H	41H
	(H)	(L)	(H)	(L)	(H)	(L)	(H)	(L)	(H)	(L)	(H)	–	–	(L)	(H)	(L)	(H)	(L)		(H)	(L)

Sum check is performed in this range.

Character A section

*1

Command				Sub-command				Device code		Start Device						Number of device points			
0	4	0	1	0	0	0	0	D	*	0	0	0	1	0	0	0	0	0	2
30H	34H	30H	31H	30H	30H	30H	30H	44H	2AH	30H	30H	30H	31H	30H	30H	30H	30H	30H	32H
(H)	–	–	(L)	(H)	–	–	(L)	(H)	(L)	(H)	–	–	–	–	(L)	(H)	–	–	(L)

POINT

QnA compatible 4C frame (format 5)
GOT cannot use the QnA compatible 4C frame (format 5).

■ Details of data items in message format

POINT

Data code during communication
Communication is performed in ASCII code.

(1) Block No., network No., PLC No., request destination module I/O No. and station No.
Ignored in a microcomputer connection of the GOT.
Specify "00". (The request destination module I/O No. is "0000".)
"00" is converted to a 2-digit ASCII code (Hex) and transmitted from the upper digit.
(The request destination module I/O No. is 4-digit.)

(2) Station No.
Station No. is used to identify the GOT with which the host communicates. (Setting range: 0 to 1FH)
The address notated in hexadecimal is converted to a 2-digit ASCII code (Hex) and transmitted from the upper digit.
The GOT processes only commands whose station No. matches the "Host Address (0 to 31)" set at "Communication Detail Settings". (The message of command whose station No. does not match is ignored.)
For setting method of "Communication Detail Settings", refer to the following.

☞ 61.6.1 Setting communication interface (Communication settings)

(3) Command, sub-command

Specifies the contents to access from the host to GOT.
The command is converted to a 4-digit ASCII code (Hex) and transmitted from the upper digit.
For details of the commands that can be used, refer to the following.

☞ 61.5.2 List of commands

(4) Device code

Specifies the code by which the device data to be read/written is recognized.
The command is converted to a 2-digit ASCII code (Hex) and transmitted from the upper digit.
For details of the device range that can be accessed, refer to the following.

☞ 61.4 Device Data Area

(5) Head device

Specifies the head No. of the device data to be read/written.
Data notated in decimal is converted to a 6-digit ASCII code (Hex) and transmitted from the upper digit.
For details of the device range that can be accessed, refer to the following.

☞ 61.4 Device Data Area

(6) Device Points

Specifies the number of device data to be read/written. (Setting range: 1 to 40H)
The address notated in hexadecimal is converted to a 2-digit ASCII code (Hex) and transmitted from the upper digit.
When specifying multiple devices as follows, limit the total number of devices to within 64 points.

(a) When using random read/write command
When setting multiple bit accesses, word accesses or double word accesses, limit the total number of access points to within 64 points

(b) When using multiple block batch read/write commands
When setting multiple blocks, limit the total number of points of all blocks to within 64 points.

(7) Year, month, day, hour, minute, second and day of the week data

Specifies year, month, day, hour, minute, second, and day of the week to be read/set to the GOT clock data.
Data notated in decimal is converted to a 2-digit ASCII code (Hex) and transmitted from the upper digit.

☞ ■ Message format(1)Read clock data (1901) command

☞ ■ Message format(2)Set clock data (0901) command

(8) Error code

This is the response message at faulty communication appended with error contents.
The address notated in hexadecimal is converted to a 4-digit ASCII code (Hex) and transmitted from the upper digit.
For details of error codes that are generated in formats 7 to 10 (QnA compatible 3C/4C frame), refer to the following:

☞ ■ Error code list

POINT

When connecting a microcomputer, etc. that uses the MC protocol of the Q/QnA series serial communication module with the GOT

When connecting a microcomputer, etc. that uses the MC protocol of the Q/QnA series serial communication module with the GOT, correct the commands to be used and the device ranges to match the GOT specifications.

■ Message Formats

The following shows the message format of the dedicated commands for a microcomputer connection of GOT.

(1) Read clock data (1901) command

The following shows an example of reading the clock data of GOT.
(Assuming that the clock data of GOT has been set to "2004, June 1, 18:46:49, Tuesday".)

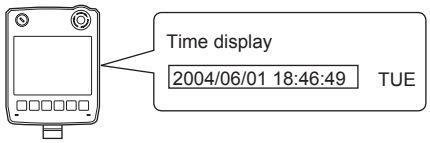

Item	Message Formats
Request message (host ⟶ GOT)	Example: Format 7 (QnA compatible 4C frame (format 1))
Response message during normal communication (GOT ⟶ host)	Example: Format 7 (QnA compatible 4C frame (format 1))
Response message during faulty communication (GOT ⟶ host)	Example: Format 7 (QnA compatible 4C frame (format 1))

Request message (host ⟶ GOT)

ENQ	Frame ID No.		Station No.		Network No.		PLC No.		Request destination module I/O No.				Request destination module station No.		Following*1	Sum check	
	F	8	0	0	0	0	0	0	0	0	0	0	0	0		A	9
05H	46H	38H	30H	30H	30H	30H	30H	30H	30H	30H	30H	30H	30H	30H		41H	39H
	(H)	(L)	(H)	(L)	(H)	(L)	(H)	(L)	(H)	–	–	(L)	(H)	(L)		(H)	(L)

Sum check is performed in this range.

Character A section

*1

Host Address No.		Command				Sub-command			
0	0	1	9	0	1	0	0	0	0
30H	30H	31H	39H	30H	31H	30H	30H	30H	30H
(H)	(L)	(H)	–	–	(L)	(H)	–	–	(L)

Response message during normal communication (GOT ⟶ host)

STX	Frame ID No.		Station No.		Network No.		PLC No.		Request destination module I/O No.				Request destination module station No.		Following*1	ETX	Sum check	
	F	8	0	0	0	0	0	0	0	0	0	0	0	0			E	E
02H	46H	38H	30H	30H	30H	30H	30H	30H	30H	30H	30H	30H	30H	30H		03H	43H	43H
	(H)	(L)	(H)	(L)	(H)	(L)	(H)	(L)	(H)	–	–	(L)	(H)	(L)			(H)	(L)

Sum check is performed in this range.

Character B section

*1

Host Address No.		Year data		Month data		Day data		Hour data		Minute data		Second data		Day-of-week data	
0	0	0	4	0	6	0	1	1	8	4	6	4	9	0	2
30H	30H	30H	34H	30H	36H	30H	31H	31H	38H	34H	36H	34H	39H	30H	32H
(H)	(L)	(H)	(L)	(H)	(L)	(H)	(L)	(H)	(L)	(H)	(L)	(H)	(L)	(H)	(L)

Response message during faulty communication (GOT ⟶ host)

NAK	Frame ID No.		Station No.		Network No.		PLC No.		Request destination module I/O No.				Request destination module station No.		Host Address No.		Following*1
	F	8	0	0	0	0	0	0	0	0	0	0	0	0	0	0	
15H	46H	38H	30H	30H	30H	30H	30H	30H	30H	30H	30H	30H	30H	30H	30H	30H	
	(H)	(L)	(H)	(L)	(H)	(L)	(H)	(L)	(H)	–	–	(L)	(H)	(L)	(H)	(L)	

*1

Error code			
7	F	6	9
37H	46H	36H	39H
(H)	–	–	(L)

The above is the case where a parity error (7F69H) has occurred.

(2) Set clock data (0901) command

The following shows an example of setting the clock data of GOT.

(Assuming the clock data of GOT is to be set to "2004, June 1, 18:46:49 Tuesday".)

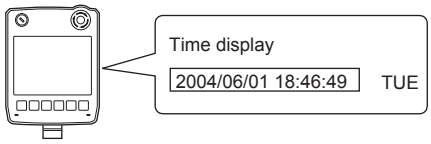

After execution

Item	Message Formats
Request message (host → GOT)	Example: Format 7 (QnA compatible 4C frame (format 1))
Response message during normal communication (GOT → host)	Example: Format 7 (QnA compatible 4C frame (format 1))

Example: Format 7 (QnA compatible 4C frame (format 1))

ENQ	Frame ID No.		Station No.		Network No.		PLC No.		Request destination module I/O No.				Request destination module station No.		Host Address No.		Following*1	Sum check	
	F	8	0	0	0	0	0	0	0	0	0	0	0	0	0	0		7	5
05H	46H	38H	30H	30H	30H	30H	30H	30H	30H	30H	30H	30H	30H	30H	30H	30H		37H	35H
	(H)	(L)	(H)	(L)	(H)	(L)	(H)	(L)	(H)	–	–	(L)	(H)	(L)	(H)	(L)		(H)	(L)

Sum check is performed in this range.

*1 Character C section

Command				Sub-command				
0	9	0	1	0	0	0	0	→ 1)
30H	39H	30H	31H	30H	30H	30H	30H	
(H)	–	–	(L)	(H)	–	–	(L)	

Character C section

1) →	Year data		Month data		Day data		Hour data		Minute data		Second data		Day-of-week data	
	0	4	0	6	0	1	1	8	4	6	4	9	0	2
	30H	34H	30H	36H	30H	31H	31H	38H	34H	36H	34H	39H	30H	32H
	(H)	(L)	(H)	(L)	(H)	(L)	(H)	(L)	(H)	(L)	(H)	(L)	(H)	(L)

Example: Format 7 (QnA compatible 4C frame (format 1))

ACK	Frame ID No.		Station No.		Network No.		PLC No.		Request destination module I/O No.				Request destination module station No.		Host Address No.	
	F	8	0	0	0	0	0	0	0	0	0	0	0	0	0	0
06H	46H	38H	30H	30H	30H	30H	30H	30H	30H	30H	30H	30H	30H	30H	30H	30H
	(H)	(L)	(H)	(L)	(H)	(L)	(H)	(L)	(H)	–	–	(L)	(H)	(L)	(H)	(L)

(Continued to next page)

(From previous page)

Item	Message Formats
Response message during faulty communication (GOT → host)	Example: Format 7 (QnA compatible 4C frame (format 1))

NAK	Frame ID No.		Station No.		Network No.		PLC No.		Request destination module I/O No.				Request destination module station No.		Host Address No.		Following*1
	F	8	0	0	0	0	0	0	0	0	0	0	0	0	0	0	
15H	46H	38H	30H	30H	30H	30H	30H	30H	30H	30H	30H	30H	30H	30H	30H	30H	
	(H)	(L)	(H)	(L)	(H)	(L)	(H)	(L)	(H)	–	–	(L)	(H)	(L)	(H)	(L)	

*1

Error code			
7	F	6	9
37H	46H	36H	39H
(H)	–	–	(L)

The above is the case where a parity error (7F69H) has occurred.

POINT

When a wrong day of the week has been set by the clock data setting command

If a wrong day of the week is set by the clock data setting commands, the clock data will differ from the time displayed on the utility.

Example: When June 1, 2004 (Thursday) is set by the clock data setting command (the actual day of the week is Tuesday)

Tuesday (TUE) will be displayed on the utility time display.

■ Error code list

The following shows error code, error contents, cause, and measures.

Error code	Description	Measures
7E40H	Command error An unsupported command or sub-command was used.	• Review the contents of the message to transmit. • Check the commands in the message. (☞ 61.5.2 List of commands)
7E41H	Data length error Specified points exceeding the number of points that can be communicated during random read/write.	• Review the contents of the message to transmit. • Check the devices that can be used and the device ranges. (☞ 61.4 Device Data Area)
7E42H	Number of data error The number of requests exceeds the command range.	
7E43H	Device error A non-existent device has been specified.	• Review the contents of the message to transmit. • Check the devices that can be used and the device ranges. (☞ 61.4 Device Data Area)
7E46H	Clock data setting error The setting value of the clock data has error.	• Review the contents of the message to transmit. • Check whether the non-existent data is set (e.g. setting "07" at the day of the week) as clock data.
7E4FH	Exceeded number of points error The read/write range exceeded the device range.	• Review the contents of the message to transmit. • Check the devices that can be used and the device ranges. (☞ 61.4 Device Data Area)
7F20H	Character error A character other than "A to Z", "0 to 9", space, and control codes has been received.	• Review the contents of the message to transmit.
7F23H	Communication message error EXT/CR+LF was not found within the upper limit of the receive buffer.	• Check the communication cable and communication module attachment. • Check the settings of "Communication Detail Settings". • Review the contents of the message to transmit.
7F24H	Sum check error The sum check code created from received data differs from the sum check code in the receive data.	• Review the contents of the message to transmit.
7F67H	Overrun error The next data was transmitted from the host before GOT completes the processing of the data received.	• Check the settings of "Communication Detail Settings". • Decrease the transmission speed.
7F68H	Framing error The data bit and/or stop bit are not correct.	• Check the communication cable and communication module attachment. • Check the settings of "Communication Detail Settings". • Match the GOT and host transmission settings.
7F69H	Parity error The parity bit does not match.	
7F6AH	Buffer full error The receive buffer overflowed.	• Check the communication cable and communication module attachment. • Check the settings of "Communication Detail Settings". • Review the contents of the message to transmit.

61.5.6 Formats 11 to 13 (Digital Electronics Corporation's memory link method)

■ Basic format of data communication

This is the same format as the protocol of the Digital Electronics Corporation's memory link method.
For details of the basic format of data communication, refer to the following manual:

☞ The connection manual of the device manufactured by Digital Electronics Corporation

This section describes items whose settings differ from the protocols of the Digital Electronics Corporation's memory link method and dedicated commands for a microcomputer connection of GOT.

Example: Request message for the batch read in word units (R) command in format 13 (Digital Electronics Corporation's memory link method (extended mode, ASCII code 1:n))

ENQ	Station No.		ESC	Com-mand	Address				Number of points				Sum Check		CR	LF
	0	0		R	0	0	6	4	0	0	0	2	5	E		
05H	30H	30H	1BH	52H	30H	30H	36H	34H	30H	30H	30H	32H	35H	45H	0DH	0AH
	(H)	(L)			(H)	–	–	(L)	(H)	–	–	(L)	(H)	(L)		

Sum check is performed in this range.

■ Details of data items in message format

POINT

Data code during communication

Communication is performed in ASCII code.

(1) Command

Specifies the contents to access from the host to GOT.
The command is converted to a 1-digit ASCII code (Hex) and transmitted.
For details of the commands that can be used, refer to the following.

☞ 61.5.2 List of commands

(2) Station No.

Station No. is used to identify the GOT with which the host communicates. (Setting range: 0 to 1FH)
The address notated in hexadecimal is converted to a 2-digit ASCII code (Hex) and transmitted from the upper digit.
The GOT processes only commands whose station No. matches the "Host Address (0 to 31)" set at "Communication Detail Settings". (The message of command whose station No. does not match is ignored.)
For setting method of "Communication Detail Settings", refer to the following.

☞ 61.6.2 Communication detail settings

(3) Address

Specifies the head No. of the device data to be read/written.
The address notated in hexadecimal is converted to a 4-digit ASCII code (Hex) and transmitted from the upper digit.
For details of the device range that can be accessed, refer to the following.

☞ 61.4 Device Data Area

(4) Number of points

Specifies the number of device data to be read/written. (Setting range: 1 to 40H)

The address notated in hexadecimal is converted to a 4-digit ASCII code (Hex) and transmitted from the upper digit.

(5) Year, month, day, hour, minute, second and day of the week data

Specifies year, month, day, hour, minute, second, and day of the week to be read/set to the GOT clock data.

Data notated in decimal is converted to a 2-digit ASCII code (Hex) and transmitted from the upper digit.

☞ ■ Message format(1)Read clock data (N) command

☞ ■ Message format(2)Set clock data (M) command

(6) Error code

This is the response message at faulty communication appended with error contents.

The address notated in hexadecimal is converted to a 2-digit ASCII code (Hex) and transmitted from the upper digit.

For details of error codes generated in formats 12 and 13 (Digital Electronics Corporation's memory link method (extended mode)), refer to the following:

☞ ■ Error code list

POINT

When connecting a microcomputer, etc. that uses the protocol of the Digital Electronics Corporation's memory link method with the GOT

When connecting a microcomputer, etc. that uses the protocol of the Digital Electronics Corporation's memory link method with the GOT, correct the commands to be used and the device ranges to match the specifications of the GOT.

■ Message Formats

The following shows the message format of the dedicated commands for a microcomputer connection of GOT.

(1) Read clock data (N) command

The following shows an example of reading the clock data of GOT.
(Assuming that the clock data of GOT has been set to "2004, June 1, 18:46:49, Tuesday".)

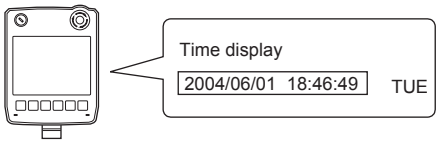

Item	Message Formats
Request message (host → GOT)	Example: Format 13 (Digital Electronics Corporation's memory link method (extended mode, ASCII code 1:n)) • Digital compatible signal (GS580 to GS583): OFF (Partly compatible) ENQ: 05H Station No.: 0 0 (30H 30H) (H) (L) ESC: 1BH Command: N 4EH Sum Check: C E (43H 45H) (H) (L) CR: 0DH LF: 0AH This range Sum check • Digital compatible signal (GS580 to GS583): ON (Fully compatible) ENQ: 05H Station No.: 0 0 (30H 30H) (H) (L) ESC: 1BH Command: N 4EH Sum Check: C 9 (43H 39H) (H) (L) CR: 0DH LF: 0AH This range Sum check

(Continued to next page)

Item	Message Formats
Response message during normal communication (GOT → host)	Example: Format 13 (Digital Electronics Corporation's memory link method (extended mode, ASCII code 1:n)) • Digital compatible signal (GS580 to GS583): OFF (Partly compatible)

STX	Station No.		ESC	Com-mand		ETX	Sum Check		CR	LF
	0	0		A	Following*1		8	E		
02H	30H	30H	1BH	41H		03H	38H	45H	0DH	0AH
	(H)	(L)					(H)	(L)		

This range Sum check

*1

Year data		Month data		Day data		Hour data		Minute data		Second data		Day-of-week data	
0	4	0	6	0	1	1	8	4	6	4	9	0	2
30H	34H	30H	36H	30H	31H	31H	38H	34H	36H	34H	39H	30H	32H
(H)	(L)	(H)	(L)	(H)	(L)	(H)	(L)	(H)	(L)	(H)	(L)	(H)	(L)

• Digital compatible signal (GS580 to GS583): ON (Fully compatible)

STX	Station No.		ESC	Com-mand		ETX	Sum Check		CR	LF
	0	0		A	Following*1		8	C		
02H	30H	30H	1BH	41H		03H	38H	43H	0DH	0AH
	(H)	(L)					(H)	(L)		

This range Sum check

*1

Year data		Month data		Day data		Hour data		Minute data		Second data		Day-of-week data	
0	4	0	6	0	1	1	8	4	6	4	9	0	2
30H	34H	30H	36H	30H	31H	31H	38H	34H	36H	34H	39H	30H	32H
(H)	(L)	(H)	(L)	(H)	(L)	(H)	(L)	(H)	(L)	(H)	(L)	(H)	(L)

Response message during faulty communication (GOT → host)	Example: Format 13 (Digital Electronics Corporation's memory link method (extended mode, ASCII code 1:n))

NAK	Station No.		Error code		CR	LF
	0	0	0	6		
15H	30H	30H	30H	36H	0DH	0AH
	(H)	(L)	(H)	(L)		

The above is a case where the sum check error (06H) has occurred.

(2) Set clock data (M) command

The following shows an example of setting the clock data of GOT.
(Assuming the clock data of GOT is to be set to "2004, June 1, 18:46:49 Tuesday".)

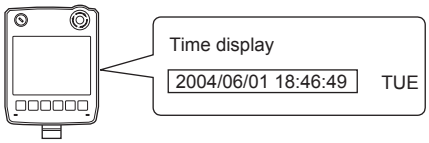

After execution

Item	Message Formats
Request message (host → GOT)	Example: Format 13 (Digital Electronics Corporation's memory link method (extended mode, ASCII code 1:n)) • Digital compatible signal (GS580 to GS583): OFF (Partly compatible)

ENQ	Station No.		ESC	Com-mand	Following	Sum Check		CR	LF
	0	0		M	*1	9	A		
05H	30H (H)	30H (L)	1BH	4DH		39H (H)	41H (L)	0DH	0AH

Sum check is performed in this range.

*1

Year data		Month data		Day data		Hour data		Minute data		Second data		Day-of-week data	
0	4	0	6	0	1	1	8	4	6	4	9	0	2
30H (H)	34H (L)	30H (H)	36H (L)	30H (H)	31H (L)	31H (H)	38H (L)	34H (H)	36H (L)	34H (H)	39H (L)	30H (H)	32H (L)

• Digital compatible signal (GS580 to GS583): ON (Fully compatible)

ENQ	Station No.		ESC	Com-mand	Following	Sum Check		CR	LF
	0	0		M	*1	9	5		
05H	30H (H)	30H (L)	1BH	4DH		39H (H)	35H (L)	0DH	0AH

Sum check is performed in this range.

*1

Year data		Month data		Day data		Hour data		Minute data		Second data		Day-of-week data	
0	4	0	6	0	1	1	8	4	6	4	9	0	2
30H (H)	34H (L)	30H (H)	36H (L)	30H (H)	31H (L)	31H (H)	38H (L)	34H (H)	36H (L)	34H (H)	39H (L)	30H (H)	32H (L)

Response message during normal communication (GOT → host)

Example: Format 13 (Digital Electronics Corporation's memory link method (extended mode, ASCII code 1:n))

ACK	Station No.		CR	LF
	0	0		
06H	30H (H)	30H (L)	0DH	0AH

(Continued to next page)

Item	Message Formats
Response message during faulty communication (GOT → host)	Example: Format 13 (Digital Electronics Corporation's memory link method (extended mode, ASCII code 1:n))

NAK	Station No.		Error code		CR	LF
	0	0	0	6		
15H	30H (H)	30H (L)	30H (H)	36H (L)	0DH	0AH

The above is a case where the sum check error (06H) has occurred.

POINT

When a wrong day of the week has been set by the clock data setting command

If a wrong day of the week is set by the clock data setting commands, the clock data will differ from the time displayed on the utility.

Example: When June 1, 2004 (Thursday) is set by the clock data setting command (the actual day of the week is Tuesday)

Tuesday (TUE) will be displayed on the utility time display.

(3) In the case of interrupt inquiry

The following shows an example of an interrupt inquiry when data are written to the interrupt output devices (D13 and D14).

(Assuming that "3139H" is written to D13 and "AA55H" to D14.)

Example: When the number of interrupt data bytes is 2 in format 11

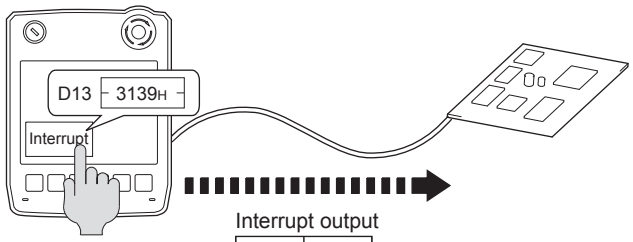

Interrupt output

Output value 1	Output value 2
31H	39H

Item	Message Formats
Request message (host ⟶ GOT)	Example: Format 13 (Digital Electronics Corporation's memory link method (extended mode, ASCII code 1:n)) • Digital compatible signal (GS580 to GS583): OFF (Partly compatible)

ENQ	Station No.		ESC	Com-mand	Sum Check		CR	LF
	0	0		I	C	9		
05H	30H (H)	30H (L)	1BH	49H	43H (H)	39H (L)	0DH	0AH

This range Sum check

• Digital compatible signal (GS580 to GS583): OFF (Fully compatible)

ENQ	Station No.		ESC	Com-mand	Sum Check		CR	LF
	0	0		I	C	4		
05H	30H (H)	30H (L)	1BH	49H	43H (H)	34H (L)	0DH	0AH

This range Sum check

(Continued to next page)

Item	Message Formats
Interrupt output (GOT → host)	Example: Format 13 (Digital Electronics Corporation's memory link method (extended mode, ASCII code 1:n)) (1) When [Interrupt Data Byte] in "Communication Detail Settings" is set to "1 byte" 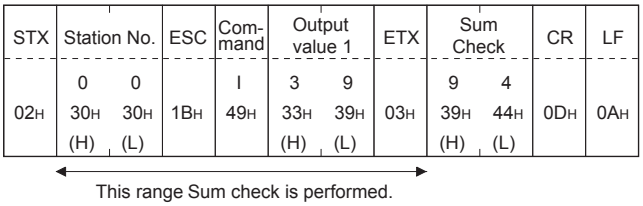 (2) When [Interrupt Data Byte] in "Communication Detail Settings" is set to "2 byte" 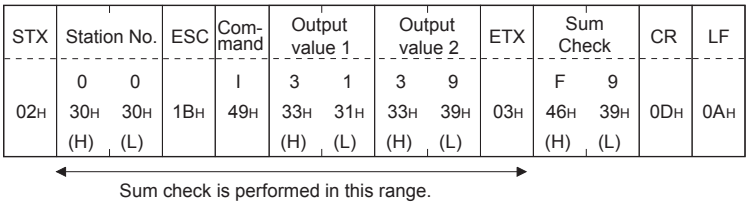 (3) When [Interrupt Data Byte] in "Communication Detail Settings" is set to "4 byte" 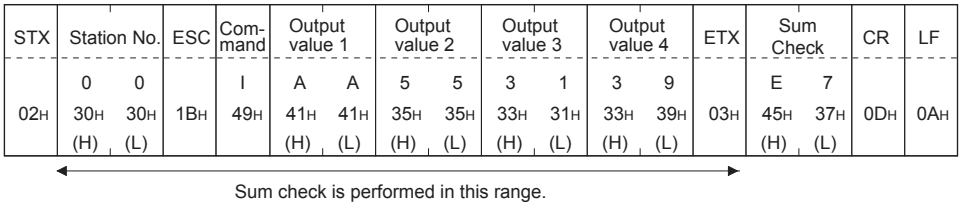

POINT

Interrupt output

- To disable the interrupt output, turn ON SM52 (interrupt code output disable flag). (61.4.6 SM devices)
- To issue interrupts in format 11, set the data length to "8 bits" at "Communication Detail Settings". (61.6.1 Setting communication interface (Communication settings))
- When "7 bits" is set, the MSB (8th bit) is ignored. (Example: FFH → 7FH)

■ Error code list

In the case of formats 12 and 13 (Digital Electronics Corporation's memory link method (extended mode)), the details (error code) of the error are appended to the response message during faulty communication.
The following shows error code, error contents, cause, and measures.

Error code	Description	Measures
06H	Sum check error The sum check code created from received data differs from the sum check code in the receive data.	• Review the contents of the message to transmit.
10H	Command error An unsupported command was used.	• Review the contents of the message to transmit. • Check the commands in the message. (☞ 61.5.2 List of commands)
12H	Message length error The upper limit of the data length that can be received by the GOT has been exceeded.	
16H	Clock data setting error The setting value of the clock data has error.	• Review the contents of the message to transmit. • Check the data length of the message. (data length of the data section, etc.)
FAH	Address error The start address of the read/write device is out of range.	• Review the contents of the message to transmit. • Check whether the non-existent data is set (e.g. setting "07" at the day of the week) as clock data.
FBH	Exceeded number of points error The read/write range exceeded the device range.	• Review the contents of the message to transmit. • Check the devices that can be used and the device ranges. (☞ 61.4 Device Data Area)
FCH	Message format error The format of the received message has error.	• Check the settings of "Communication Detail Settings". • Review the contents of the message to transmit.
FFH	Timeout error There is no response from the GOT, or the station of the specified address does not exist.	• Check the communication cable and communication module attachment. • Check the settings of "Communication Detail Settings". • Review the contents of the message to transmit.

■ Precautions

(1) Batch reading/writing crossing over different devices
When using the batch read (R) or batch write (W) command, do not batch read/write crossing over the different devices.
This will cause an error response.

(2) Storage order for 32-bit data
To use the program of Digital Electronics Corporation's memory link method with [32bit Order] setting to GOT1000 series, set [HL Order] to [32bit Order] for [Communication Detail Settings] when 32-bit data is set for GOT-A900 series.
With setting [LH Order], the order of upper bits and lower bits are reversed when the GOT displays and writes 32-bit data.

61.5.7 Formats 14, 15 (GOT-F900 Series microcomputer connection)

■ Basic format of data communication

<table>
<tr><th>Item</th><th>Message Formats</th></tr>
<tr><td>Request message
(host → GOT)</td><td>
(format 14: GOT-F900 Series microcomputer connection (format 1))
(1) w/out station No.
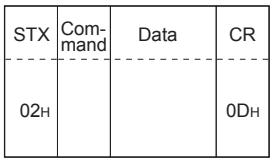

(2) w/station No.
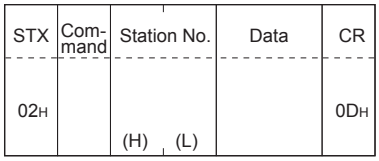

(format 15: GOT-F900 Series microcomputer connection (format 2))
(1) w/out station No.
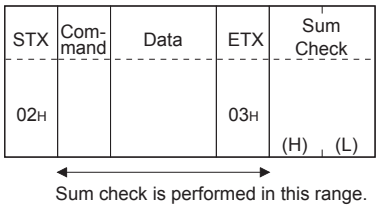

(2) w/station No.
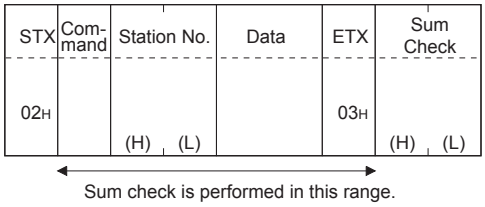

</td></tr>
<tr><td rowspan="2">Response message during normal communication
(GOT → host)</td><td>
(1) During processing of read commands
(format 14: GOT-F900 Series microcomputer connection (format 1))
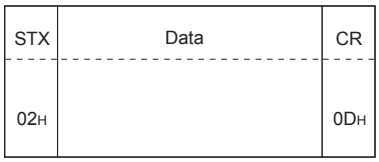

(format 15: GOT-F900 Series microcomputer connection (format 2))
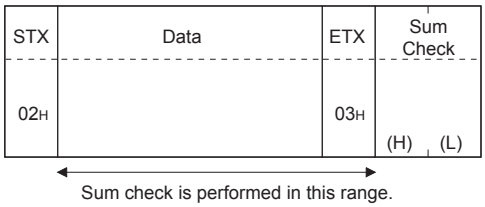

</td></tr>
<tr><td>
(2) During processing of write commands

</td></tr>
<tr><td>Response message during faulty communication
(GOT → host)</td><td>
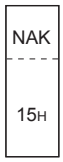

</td></tr>
<tr><td>During interrupt output</td><td>
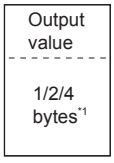

</td></tr>
</table>

*1 Set the number of interrupt data bytes at "Communication Details Settings" on GT Designer3.
For the setting of the number of interrupt data bytes, refer to the following.

61.6.1 Setting communication interface (Communication settings)

■ Details of data items in message format

POINT

Data code during communication

Communication is performed in ASCII code. (excluding interrupt output)

(1) Control codes

Symbol	ASCII code	Description
STX	02H	Start of Text (start marker of message frame)
ETX	03H	End of Text (end marker of message frame)
EOT	04H	End of Transmission
ENQ	05H	Enquiry (start of enquiry)
NAK	15H	Negative ACK (error response)
ACK	06H	Acknowledge (write completion response)
LF	0AH	Line Feed
CL	0CH	Clear
CR	0DH	Carriage Return

(2) Command

Specifies the contents to access from the host to GOT.
The command is converted to a 1-digit ASCII code (Hex) and transmitted.
For details of the commands that can be used, refer to the following.

☞ 61.5.2 List of commands

(3) Station No.

Station No. is used to identify the GOT with which the host communicates. (Setting range: 0 to 31)
Data notated in decimal is converted to a 2-digit ASCII code (Hex) and transmitted from the upper digit.
The GOT processes only commands whose station No. matches the "Host Address (0 to 31)" set at "Communication Detail Settings". (The message of command whose station No. does not match is ignored.)
For setting method of "Communication Detail Settings", refer to the following.

☞ 61.6.1 Setting communication interface (Communication settings)

(4) Address

Specifies the head No. of the device data to be read/written.
The address notated in hexadecimal is converted to a 4-digit ASCII code (Hex) and transmitted from the upper digit.
For details of the device range that can be accessed, refer to the following.

☞ 61.4 Device Data Area

(5) Bit pattern

Specifies the pattern of the bits to change.
The address notated in hexadecimal is converted to a 2-digit ASCII code (Hex) and transmitted from the upper digit.

☞ ■ Message format(3)Multi-point write in bit units (3) command (w/out station No.), multi-point write in bit units (D) command (w/ station No.)

(6) Write specification

Specifies how to change the data of the specified address by bit pattern.
(Setting range: 0 to 3)
Data notated in decimal is converted to a 1-digit ASCII code (Hex) and transmitted.

☞ ■ Message format(3)Multi-point write in bit units (3) command (w/out station No.), multi-point write in bit units (D) command (w/ station No.)

(7) Number of bytes

Specifies the number of bytes of the device data to be batch read/written. (Setting range: 0 to FF$_H$)
The address notated in hexadecimal is converted to a 2-digit ASCII code (Hex) and transmitted from the upper digit.

(8) Number of points

Specifies the number of device data to be written to multiple points in bit units. (Setting range: 0 to 70)
Data notated in decimal is converted to a 2-digit ASCII code (Hex) and transmitted from the upper digit.

(9) Year, month, day, hour, minute, second and day of the week data

Specifies year, month, day, hour, minute, second, and day of the week to be read/set to the GOT clock data.
Data notated in decimal is converted to a 2-digit ASCII code (Hex) and transmitted from the upper digit.

☞ ■ (5) Read clock data (6) command (w/out station No.), read clock data (G) command (w/station No.)

☞ ■ (6) Set clock data (5) command (w/out station No.), set clock data (F) command (w/station No.)

(10) Data

Specifies the data to read from/write to the specified device data. (word unit)
The address notated in hexadecimal is converted to a 4-digit ASCII code (Hex) and transmitted from the upper digit.

(11) Write data

Specifies the data to write to the specified device data.
The address notated in hexadecimal is converted to a 2-digit ASCII code (Hex) and transmitted from the upper digit.

(12) Sum check code (for format 15: GOT-F900 series microcomputer connection (format 2) only)

The sum check code is obtained by converting the lower 1 byte (8 bits) of the result (sum), after having added the sum check target data as binary data, to 2-digit ASCII code (Hex).

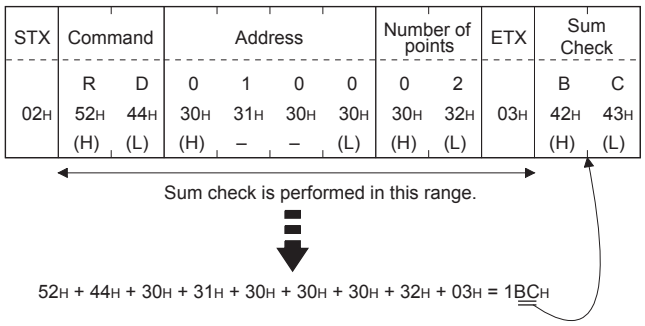

■ Message Formats

(1) Batch read (0) command (w/out station No.), batch read (A) command (w/station No.)

(a) When reading a word device

The following shows an example of reading four bytes of virtual devices R100 to R101 from the GOT at station No.15.

(Assuming R100=3D21H, R101=3604H are stored.)

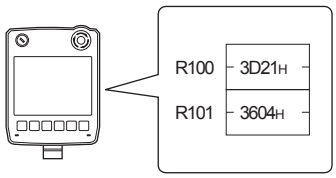

Item	Message Formats
Request message (host ⟶ GOT)	(format 14: GOT-F900 Series microcomputer connection (format 1))

STX	Com-mand	Station No.		Address				Number of bytes		CR
	A	1	5	0	0	C	8	0	4	
02H	41H	31H (H)	35H (L)	30H (H)	30H –	43H –	38H (L)	30H (H)	34H (L)	0DH

(format 15: GOT-F900 Series microcomputer connection (format 2))

STX	Com-mand	Station No.		Address				Number of bytes		ETX	Sum Check	
	A	1	5	0	0	C	8	0	4		E	9
02H	41H	31H (H)	35H (L)	30H (H)	30H –	43H –	38H (L)	30H (H)	34H (L)	03H	45H (H)	39H (L)

Sum check is performed in this range.

Response message during normal communication (GOT ⟶ host)	(format 14: GOT-F900 Series microcomputer connection (format 1))

STX	Data 1 (R100 upper)		Data 2 (R100 lower)		Data 3 (R101 upper)		Data 4 (R101 lower)		CR
	3	D	2	1	3	6	0	4	
02H	33H (H)	44H (L)	32H (H)	31H (L)	33H (H)	36H (L)	30H (H)	34H (L)	0DH

(format 15: GOT-F900 Series microcomputer connection (format 2))

STX	Data 1 (R100 upper)		Data 2 (R100 lower)		Data 3 (R101 upper)		Data 4 (R101 lower)		ETX	Sum Check	
	3	D	2	1	3	6	0	4		A	A
02H	33H (H)	44H (L)	32H (H)	31H (L)	33H (H)	36H (L)	30H (H)	34H (L)	03H	41H (H)	41H (L)

Sum check is performed in this range.

Response message during faulty communication (GOT ⟶ host)	NAK: 15H

(b) When reading a bit device

The following shows an example of reading four bytes of the virtual devices M0 to M31.
(Assuming M0="1" and M31="1" are stored.)

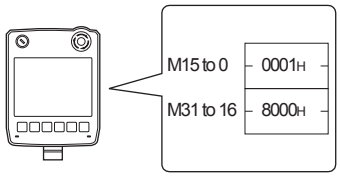

<table>
<tr><th>Item</th><th>Message Formats</th></tr>
<tr><td>Request message
(host → GOT)</td><td>
(format 14: GOT-F900 Series microcomputer connection (format 1))
<table>
<tr><td>STX</td><td>Com-mand</td><td colspan="2">Station No.</td><td colspan="4">Address</td><td colspan="2">Number of bytes</td><td>CR</td></tr>
<tr><td></td><td>A</td><td>1</td><td>5</td><td>2</td><td>0</td><td>0</td><td>0</td><td>0</td><td>4</td><td></td></tr>
<tr><td>02H</td><td>41H</td><td>31H
(H)</td><td>35H
(L)</td><td>32H
(H)</td><td>30H
–</td><td>30H
–</td><td>30H
(L)</td><td>30H
(H)</td><td>34H
(L)</td><td>0DH</td></tr>
</table>
(format 15: GOT-F900 Series microcomputer connection (format 2))
<table>
<tr><td>STX</td><td>Com-mand</td><td colspan="2">Station No.</td><td colspan="4">Address</td><td colspan="2">Number of bytes</td><td>ETX</td><td colspan="2">Sum Check</td></tr>
<tr><td></td><td>A</td><td>1</td><td>5</td><td>2</td><td>0</td><td>0</td><td>0</td><td>0</td><td>4</td><td></td><td>D</td><td>0</td></tr>
<tr><td>02H</td><td>41H</td><td>31H
(H)</td><td>35H
(L)</td><td>32H
(H)</td><td>30H
–</td><td>30H
–</td><td>30H
(L)</td><td>30H
(H)</td><td>34H
(L)</td><td>03H</td><td>44H
(H)</td><td>30H
(L)</td></tr>
</table>
Sum check is performed in this range.
</td></tr>
<tr><td>Response message during normal communication
(GOT → host)</td><td>
(format 14: GOT-F900 Series microcomputer connection (format 1))
<table>
<tr><td>STX</td><td colspan="2">Data 1 (M7 to 0)</td><td colspan="2">Data 2 (M15 to 8)</td><td colspan="2">Data 3 (M23 to 16)</td><td colspan="2">Data 4 (M31 to 24)</td><td>CR</td></tr>
<tr><td></td><td>0</td><td>1</td><td>0</td><td>0</td><td>0</td><td>0</td><td>8</td><td>0</td><td></td></tr>
<tr><td>02H</td><td>30H
(H)</td><td>31H
(L)</td><td>30H
(H)</td><td>30H
(L)</td><td>30H
(H)</td><td>30H
(L)</td><td>38H
(H)</td><td>30H
(L)</td><td>0DH</td></tr>
</table>
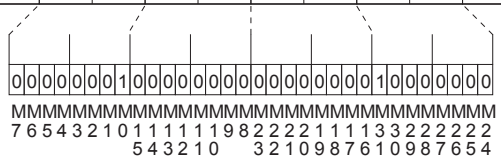

(format 15: GOT-F900 Series microcomputer connection (format 2))
Sum check is performed in this range.
<table>
<tr><td>STX</td><td colspan="2">Data 1 (M7 to 0)</td><td colspan="2">Data 2 (M15 to 8)</td><td colspan="2">Data 3 (M23 to 16)</td><td colspan="2">Data 4 (M31 to 24)</td><td>ETX</td><td colspan="2">Sum Check</td></tr>
<tr><td></td><td>0</td><td>1</td><td>0</td><td>0</td><td>0</td><td>0</td><td>8</td><td>0</td><td></td><td>8</td><td>C</td></tr>
<tr><td>02H</td><td>30H
(H)</td><td>31H
(L)</td><td>30H
(H)</td><td>30H
(L)</td><td>30H
(H)</td><td>30H
(L)</td><td>38H
(H)</td><td>30H
(L)</td><td>03H</td><td>38H
(H)</td><td>43H
(L)</td></tr>
</table>
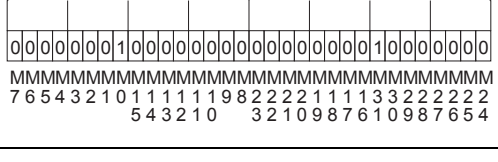

</td></tr>
<tr><td>Response message during faulty communication
(GOT → host)</td><td>
<table>
<tr><td>NAK</td></tr>
<tr><td>15H</td></tr>
</table>
</td></tr>
</table>

(2) Batch write (1) command (w/out station No.), batch write (B) command (w/station No.)

(a) When writing to a word device

The following shows an example of writing "0064H" and "0065H" to virtual devices R100 and R101 on the GOT at station No.15.

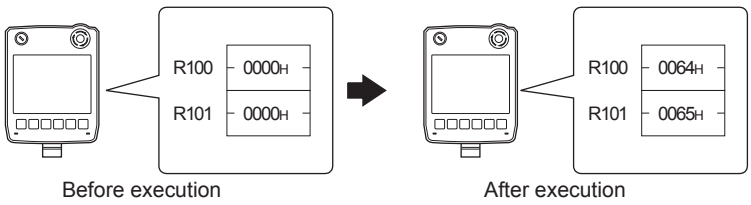

Before execution　　After execution

<table>
<tr><th>Item</th><th>Message Formats</th></tr>
<tr><td>Request message
(host ⟶ GOT)</td><td>
(format 14: GOT-F900 Series microcomputer connection (format 1))
<table>
<tr><th>STX</th><th>Com-mand</th><th colspan="2">Station No.</th><th colspan="4">Address</th><th colspan="2">Number of bytes</th><th>Following*1</th><th>CR</th></tr>
<tr><td></td><td>B</td><td>1</td><td>5</td><td>0</td><td>0</td><td>C</td><td>8</td><td>0</td><td>4</td><td></td><td></td></tr>
<tr><td>02H</td><td>42H</td><td>31H</td><td>35H</td><td>30H</td><td>30H</td><td>43H</td><td>38H</td><td>30H</td><td>34H</td><td></td><td>0DH</td></tr>
<tr><td></td><td></td><td>(H)</td><td>(L)</td><td>(H)</td><td>–</td><td>–</td><td>(L)</td><td>(H)</td><td>(L)</td><td></td><td></td></tr>
</table>
(format 15: GOT-F900 Series microcomputer connection (format 2))
<table>
<tr><th>STX</th><th>Com-mand</th><th colspan="2">Station No.</th><th colspan="4">Address</th><th colspan="2">Number of bytes</th><th>Following*1</th><th>ETX</th><th colspan="2">Sum Check</th></tr>
<tr><td></td><td>B</td><td>1</td><td>5</td><td>0</td><td>0</td><td>C</td><td>8</td><td>0</td><td>4</td><td></td><td></td><td>9</td><td>1</td></tr>
<tr><td>02H</td><td>42H</td><td>31H</td><td>35H</td><td>30H</td><td>30H</td><td>43H</td><td>38H</td><td>30H</td><td>34H</td><td></td><td>03H</td><td>39H</td><td>31H</td></tr>
<tr><td></td><td></td><td>(H)</td><td>(L)</td><td>(H)</td><td>–</td><td>–</td><td>(L)</td><td>(H)</td><td>(L)</td><td></td><td></td><td>(H)</td><td>(L)</td></tr>
</table>
Sum check is performed in this range.

*1
<table>
<tr><th colspan="2">Data 1
(R100 upper)</th><th colspan="2">Data 2
(R100 lower)</th><th colspan="2">Data 3
(R101 upper)</th><th colspan="2">Data 4
(R101 lower)</th></tr>
<tr><td>0</td><td>0</td><td>6</td><td>4</td><td>0</td><td>0</td><td>6</td><td>5</td></tr>
<tr><td>30H</td><td>30H</td><td>36H</td><td>34H</td><td>30H</td><td>30H</td><td>36H</td><td>35H</td></tr>
<tr><td>(H)</td><td>(L)</td><td>(H)</td><td>(L)</td><td>(H)</td><td>(L)</td><td>(H)</td><td>(L)</td></tr>
</table>
</td></tr>
<tr><td>Response message during normal communication
(GOT ⟶ host)</td><td>ACK
06H</td></tr>
<tr><td>Response message during faulty communication
(GOT ⟶ host)</td><td>NAK
15H</td></tr>
</table>

(b) When writing to a bit device

The following shows an example of writing "1"s to virtual devices M0 and M31 on the GOT at station No.15.

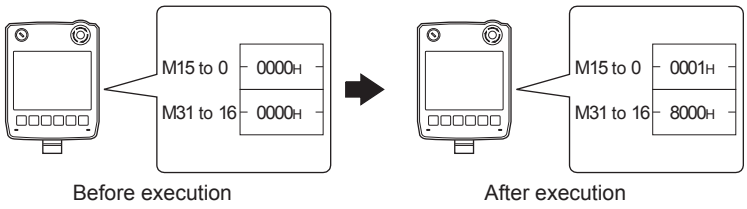

Item	Message Formats
Request message (host → GOT)	(format 14: GOT-F900 Series microcomputer connection (format 1))

STX	Com-mand	Station No.		Address				Number of bytes		Following*1	CR
	B	1	5	2	0	0	0	0	4		
02H	42H	31H (H)	35H (L)	32H (H)	30H –	30H –	30H (L)	30H (H)	34H (L)		0DH

(format 15: GOT-F900 Series microcomputer connection (format 2))

STX	Com-mand	Station No.		Address				Byte Number		Following*1	ETX	Sum Check	
	B	1	5	2	0	0	0	0	4			5	A
02H	42H	31H (H)	35H (L)	32H (H)	30H –	30H –	30H (L)	30H (H)	34H (L)		03H	35H (H)	41H (L)

Sum check is performed in this range.

*1

Data 1 (M7 to 0)		Data 2 (M15 to 8)		Data 3 (M23 to 16)		Data 4 (M31 to 24)	
0	1	0	0	0	0	8	0
30H (H)	31H (L)	30H (H)	30H (L)	30H (H)	30H (L)	38H (H)	30H (L)

0	0	0	0	0	0	0	1	0	0	0	0	0	0	0	0	0	0	0	0	0	0	0	1	0	0	0	0	0	0	0	0
M7	M6	M5	M4	M3	M2	M1	M0	M15	M14	M13	M12	M11	M10	M9	M8	M23	M22	M21	M20	M19	M18	M17	M16	M31	M30	M29	M28	M27	M26	M25	M24

Response message during normal communication (GOT → host)	ACK: 06H
Response message during faulty communication (GOT → host)	NAK: 15H

(3) Multi-point write in bit units (3) command (w/out station No.), multi-point write in bit units (D) command (w/ station No.)
The following shows an example of turning OFF the virtual device M31 and turning ON the virtual device M2038 on the GOT at station No.31.

Item	Message Formats
Request message (host ⟶ GOT)	(format 14: GOT-F900 Series microcomputer connection (format 1))

STX	Com-mand	Station No.		Number of points		Following*1	CR
	D	3	1	0	2		
02H	44H	33H (H)	31H (L)	30H (H)	32H (L)		0DH

(format 15: GOT-F900 Series microcomputer connection (format 2))

STX	Com-mand	Station No.		Number of points		Following*1	ETX	Sum check	
	D	3	1	0	2			E	C
02H	44H	33H (H)	31H (L)	30H (H)	32H (L)		03H	45H (H)	43H (L)

Sum check is performed in this range.

*1

	Write specification 1	Address1				Bit pattern1		Write specification 2	Address2				Bit pattern2	
	1	2	0	0	3	8	0	0	2	0	F	E	4	0
	31H	32H (H)	30H –	30H –	33H (L)	38H (H)	30H (L)	30H	32H (H)	30H –	46 –	45H (L)	34H (H)	30H (L)

*2 (write specification1=1)

Source data bit pattern	1	0	1	0	1	0	1	0	
	1	0	0	0	0	0	0	0	
Result	0	0	1	0	1	0	1	0	
	M3110	M3209	M3308	M3407	M3506	M3605	M3704	M3803	

*2 (write specification2=0)

Source data bit pattern	1	0	1	0	1	0	1	0	
	0	1	0	0	0	0	0	0	
Result	1	1	1	0	1	0	1	0	
	M2110	M2209	M2308	M2407	M2506	M2605	M2704	M2803	

Item	Message Formats
Response message during normal communication (GOT ⟶ host)	ACK: 06H
Response message during faulty communication (GOT ⟶ host)	NAK: 15H

*2 The write specification specifies how the data of the specified address is changed in the bit pattern.

Write specification	Function	Description	Action example
0	ON specification	Bits set to "1" by the bit pattern are turned ON.	Original data 1010 Bit pattern 1100 Result 1110
1	OFF specification	Bits set to "1" by the bit pattern are turned OFF.	Original data 1010 Bit pattern 1100 Result 0010
2	Invert specification	Bits set to "1" by the bit pattern are inverted.	Original data 1010 Bit pattern 1100 Result 0110
3	Write specification	The numerical values to write by the bit pattern are specified directly.	Original data 1010 Bit pattern 1100 Result 1100

(4) Fill command (4) (w/out station No.), fill command (E) (w/station No.)
The following shows an example of writing "16"s to virtual devices R50 to R100 on the GOT at station No.27.

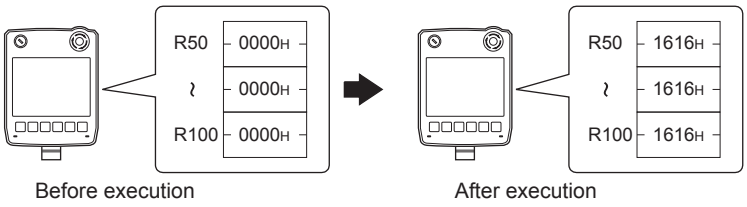

Before execution After execution

Item	Message Formats
Request message (host ⟶ GOT)	(format 14: GOT-F900 Series microcomputer connection (format 1))

STX	Com-mand	Station No.		Start address				End address				Write Data		CR
	E	2	7	0	0	6	4	0	0	C	9	1	6	
02H	45H	32H (H)	37H (L)	30H (H)	30H –	36H –	34H (L)	30H (H)	30H –	43H –	39H (L)	31H (H)	36H (L)	0DH

(format 15: GOT-F900 Series microcomputer connection (format 2))

STX	Com-mand	Station No.		Start address				End address				Write Data		ETX	Sum Check	
	E	2	7	0	0	6	4	0	0	C	9	1	6		B	E
02H	45H	32H (H)	37H (L)	30H (H)	30H –	36H –	34H (L)	30H (H)	30H –	43H –	39H (L)	31H (H)	36H (L)	03H	42H (H)	45H (L)

Sum check is performed in this range.

Response message during normal communication (GOT ⟶ host)	ACK 06H
Response message during faulty communication (GOT ⟶ host)	NAK 15H

POINT

(1) Start address/end address specification conditions
Specify addresses so that the start address is the same or less than the end address.
Error response occurs in the following cases:
- The address to specify has the start address greater than the end address.
- Either of the start address or end address exceeds the device range that can be specified.

(2) Address specifying crossing over different devices
The start address and end address can be specified crossing over different devices.

(5) Read clock data (6) command (w/out station No.), read clock data (G) command (w/station No.)
The following shows an example of reading the clock data of GOT at station No.27.
(Assuming that the clock data of GOT has been set to "2004, June 1, 18:46:49, Tuesday".)

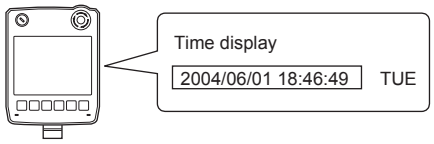

<table>
<tr><th>Item</th><th>Message Formats</th></tr>
<tr><td>Request message
(host → GOT)</td><td>
(format 14: GOT-F900 Series microcomputer connection (format 1))
<table>
<tr><th>STX</th><th>Com-mand</th><th colspan="2">Station No.</th><th>CR</th></tr>
<tr><td></td><td>G</td><td>2</td><td>7</td><td></td></tr>
<tr><td>02H</td><td>47H</td><td>32H
(H)</td><td>37H
(L)</td><td>0DH</td></tr>
</table>
(format 15: GOT-F900 Series microcomputer connection (format 2))
<table>
<tr><th>STX</th><th>Com-mand</th><th colspan="2">Station No.</th><th>ETX</th><th colspan="2">Sum Check</th></tr>
<tr><td></td><td>G</td><td>2</td><td>7</td><td></td><td>B</td><td>3</td></tr>
<tr><td>02H</td><td>47H</td><td>32H
(H)</td><td>37H
(L)</td><td>03H</td><td>42H
(H)</td><td>33H
(L)</td></tr>
</table>
Sum check is performed in this range.
</td></tr>
<tr><td>Response message during normal communication
(GOT → host)</td><td>
(format 14: GOT-F900 Series microcomputer connection (format 1))
<table>
<tr><th>STX</th><th colspan="2">Year data</th><th colspan="2">Month data</th><th colspan="2">Day data</th><th colspan="2">Hour data</th><th colspan="2">Minute data</th><th colspan="2">Second data</th><th colspan="2">Day-of-week data</th><th>CR</th></tr>
<tr><td></td><td>0</td><td>4</td><td>0</td><td>6</td><td>0</td><td>1</td><td>1</td><td>8</td><td>4</td><td>6</td><td>4</td><td>9</td><td>0</td><td>2</td><td></td></tr>
<tr><td>02H</td><td>30H
(H)</td><td>34H
(L)</td><td>30H
(H)</td><td>36H
(L)</td><td>30H
(H)</td><td>31H
(L)</td><td>31H
(H)</td><td>38H
(L)</td><td>34H
(H)</td><td>36H
(L)</td><td>34H
(H)</td><td>39H
(L)</td><td>30H
(H)</td><td>32H
(L)</td><td>0DH</td></tr>
</table>
(format 15: GOT-F900 Series microcomputer connection (format 2))
<table>
<tr><th>STX</th><th colspan="2">Year data</th><th colspan="2">Month data</th><th colspan="2">Day data</th><th colspan="2">Hour data</th><th colspan="2">Minute data</th><th colspan="2">Second data</th><th colspan="2">Day-of-week data</th><th>ETX</th><th colspan="2">Sum Check</th></tr>
<tr><td></td><td>0</td><td>4</td><td>0</td><td>6</td><td>0</td><td>1</td><td>1</td><td>8</td><td>4</td><td>6</td><td>4</td><td>9</td><td>0</td><td>2</td><td></td><td>D</td><td>0</td></tr>
<tr><td>02H</td><td>30H
(H)</td><td>34H
(L)</td><td>30H
(H)</td><td>36H
(L)</td><td>30H
(H)</td><td>31H
(L)</td><td>31H
(H)</td><td>38H
(L)</td><td>34H
(H)</td><td>36H
(L)</td><td>34H
(H)</td><td>39H
(L)</td><td>30H
(H)</td><td>32H
(L)</td><td>03H</td><td>44H
(H)</td><td>30H
(L)</td></tr>
</table>
Sum check is performed in this range.
</td></tr>
<tr><td>Response message during faulty communication
(GOT → host)</td><td>
<table>
<tr><th>NAK</th></tr>
<tr><td>15H</td></tr>
</table>
</td></tr>
</table>

(6) Set clock data (5) command (w/out station No.), set clock data (F) command (w/station No.)
The following shows an example of setting clock data of GOT at station No.27.
(Assuming the clock data of GOT is to be set to "2004, June 1, 18:46:49 Tuesday".)

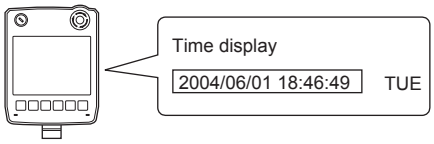

After execution

<table>
<tr><th>Item</th><th>Message Formats</th></tr>
<tr><td>Request message
(host → GOT)</td><td>
(format 14: GOT-F900 Series microcomputer connection (format 1))
<table>
<tr><th>STX</th><th>Com-mand</th><th colspan="2">Station No.</th><th colspan="2">Year data</th><th colspan="2">Month data</th><th colspan="2">Day Data</th><th colspan="2">Hour data</th><th colspan="2">Minute data</th><th colspan="2">Second data</th><th colspan="2">Day-of-week data</th><th>CR</th></tr>
<tr><td></td><td>F</td><td>2</td><td>7</td><td>0</td><td>4</td><td>0</td><td>6</td><td>0</td><td>1</td><td>1</td><td>8</td><td>4</td><td>6</td><td>4</td><td>9</td><td>0</td><td>2</td><td></td></tr>
<tr><td>02H</td><td>46H</td><td>32H (H)</td><td>37H (L)</td><td>30H (H)</td><td>34H (L)</td><td>30H (H)</td><td>36H (L)</td><td>30H (H)</td><td>31H (L)</td><td>31H (H)</td><td>38H (L)</td><td>34H (H)</td><td>36H (L)</td><td>34H (H)</td><td>39H (L)</td><td>30H (H)</td><td>32H (L)</td><td>0DH</td></tr>
</table>
(format 15: GOT-F900 Series microcomputer connection (format 2))
<table>
<tr><th>STX</th><th>Com-mand</th><th colspan="2">Station No.</th><th>Following*1</th><th>ETX</th><th colspan="2">Sum Check</th></tr>
<tr><td></td><td>F</td><td>2</td><td>7</td><td></td><td></td><td>7</td><td>F</td></tr>
<tr><td>02H</td><td>46H</td><td>32H (H)</td><td>37H (L)</td><td></td><td>03H</td><td>37H (H)</td><td>46H (L)</td></tr>
</table>
Sum check is performed in this range.

*1
<table>
<tr><th colspan="2">Year data</th><th colspan="2">Month data</th><th colspan="2">Day data</th><th colspan="2">Hour data</th><th colspan="2">Minute data</th><th colspan="2">Second data</th><th colspan="2">Day-of-week data</th></tr>
<tr><td>0</td><td>4</td><td>0</td><td>6</td><td>0</td><td>1</td><td>1</td><td>8</td><td>4</td><td>6</td><td>4</td><td>9</td><td>0</td><td>2</td></tr>
<tr><td>30H (H)</td><td>34H (L)</td><td>30H (H)</td><td>36H (L)</td><td>30H (H)</td><td>31H (L)</td><td>31H (H)</td><td>38H (L)</td><td>34H (H)</td><td>36H (L)</td><td>34H (H)</td><td>39H (L)</td><td>30H (H)</td><td>32H (L)</td></tr>
</table>
</td></tr>
<tr><td>Response message during normal communication
(GOT → host)</td><td>
<table>
<tr><th>ACK</th></tr>
<tr><td>06H</td></tr>
</table>
</td></tr>
<tr><td>Response message during faulty communication
(GOT → host)</td><td>
<table>
<tr><th>NAK</th></tr>
<tr><td>15H</td></tr>
</table>
</td></tr>
</table>

POINT

When a wrong day of the week has been set by the clock data setting command

If a wrong day of the week is set by the clock data setting commands, the clock data will differ from the time displayed on the utility.

Example: When June 1, 2004 (Thursday) is set by the clock data setting command (the actual day of the week is Tuesday)
Tuesday (TUE) will be displayed on the utility time display.

(7) In the case of interrupt outputs

The following shows an example of an interrupt output when data are written to the interrupt output devices (D13 and D14).

(Assuming that "3139H" is written to D13 and "AA55H" to D14.)

Example: When the number of interrupt data bytes is 2

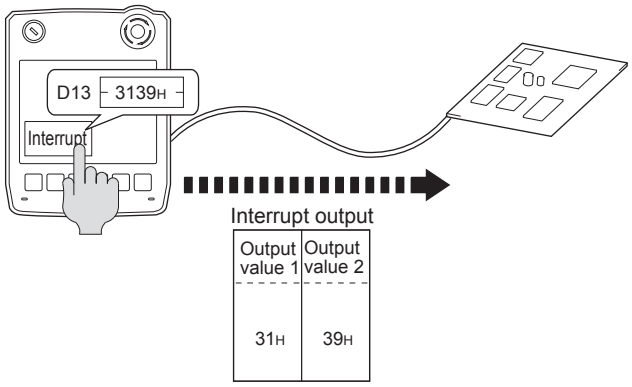

Output value 1	Output value 2
31H	39H

Item	Message Formats
Interrupt output (GOT → host)	(1) When [Interrupt Data Byte] in "Communication Detail Settings" is set to "1 byte" Output value 1: 39H (2) When [Interrupt Data Byte] in "Communication Detail Settings" is set to "2 byte" Output value 1: 31H; Output value 2: 39H (3) When [Interrupt Data Byte] in "Communication Detail Settings" is set to "4 byte" Output value 1: AAH; Output value 2: 55H; Output value 3: 31H; Output value 4: 39H

POINT

Interrupt output

- To disable the interrupt output, turn ON SM52 (interrupt code output disable flag). (☞ 61.4.6 SM devices)
- To issue interrupts, set the data length to "8 bits" at "Communication Detail Settings". (☞ 61.6.1 Setting communication interface (Communication settings))
- When "7 bits" is set, the MSB (8th bit) is ignored. (Example: FFH → 7FH)

■ Error code list

When faulty, the error code is stored in SD2.
For details of error code stored in SD2, the error contents, cause and measures, refer to the following:

☞ 61.4.5 ■ Details and actions for errors (error codes) stored into SD2

When an error other than those to be stored in SD2 occurs, at faulty, only the NAK response is executed.

■ Precautions

(1) Batch reading/writing crossing over different devices
When using the batch read (0, A) or batch write (1, B) command, do not batch read/write crossing over different devices.
This will cause an error response.

61.6 GOT Side Settings

61.6.1 Setting communication interface (Communication settings)

Set the channel of the equipment connected to the GOT.

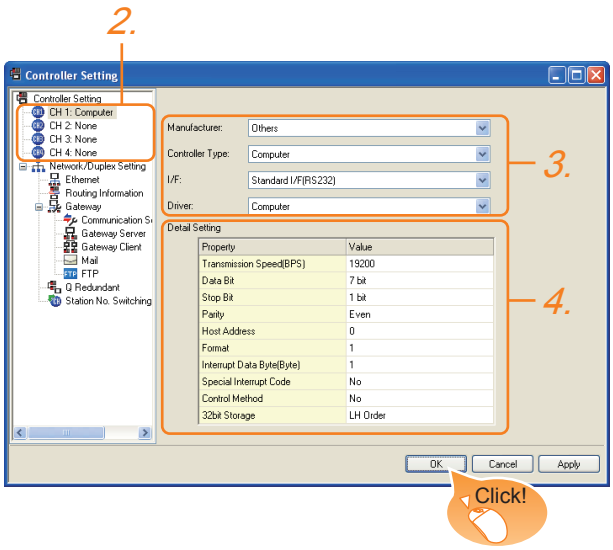

1. Select [Common] → [Controller Setting] from the menu.
2. The Controller Setting window is displayed. Select the channel to be used from the list menu.
3. Set the following items.
   - Manufacturer: Other
   - Controller Type: Computer
   - I/F: Interface to be used
   - Driver:Computer
4. The detailed setting is displayed after Manufacturer, Controller Type, I/F, and Driver are set.
   Make the settings according to the usage environment.
   61.6.2 Communication detail settings

Click the OK button when settings are completed.

POINT

The settings of connecting equipment can be set and confirmed in [I/F Communication Setting]. For details, refer to the following.

18.1.2 I/F communication setting

61.6.2 Communication detail settings

Make the settings according to the usage environment.

Item	Description	Range
Transmission Speed	Set this item when change the transmission speed used for communication with the connected equipment. (Default: 19200bps)	4800bps, 9600bps, 19200bps, 38400bps, 57600bps, 115200bps
Data Bit	Set this item when change the data length used for communication with the connected equipment. (Default: 7bit)	7bit/8bit
Stop Bit	Specify the stop bit length for communications. (Default: 1bit)	1bit/2bits
Parity	Specify whether or not to perform a parity check, and how it is performed during communication. (Default: Even)	None Even Odd
Host Address	Specify the host address (station No. of the PLC to which the GOT is connected) in the network of the GOT. (Default: 0)	0 to 31
Format	Select the communication format. (Default: 1)	1 to 15
Interrupt Data Byte	Specify the number of bytes of interrupt data. (Default: 1byte)	1byte, 2byte, 4byte
Special Interrupt Code Output	Set whether or not to output the special interrupt code. (Default: No)	Yes or No
Control Method	Set this item when selecting the XON/XOFF control for the control method. (Default: No)	XON/XOFF, No
32bit Storage	Select the steps to store two words (32-bit data). (Default: LH Order)	LH Order/ HL Order

POINT

(1) Special Interrupt Code
The following shows the compatibility between the special interrupt codes and the event types.

Special Interrupt Code (Hex)	Event type
20H	Base Screen*1 and Overlap Window*1 Output when the screens are switched according to the change in the switching device values assigned to 1/2. *1: Base Screen or Overlap Window 1/2 switches independently without being interlocked. (Example of output) When all the switching device values assigned to the Base Screen and Overlap Window1/2 are changed, 3 special interrupt codes are output.
21H	Output when Numerical/ASCII Input is completed.
22H	Output when Recipe data transfer (read-out, write-in) is completed.
23H	Output when Bar code and RFID data has been imported into GOT

(1) Communication interface setting by Utility
The communication interface setting can be changed on the Utility's [Communication setting] after writing [Communication Settings] of project data.
For details on the Utility, refer to the following manual.

11. COMMUNICATION INTERFACE SETTING (COMMUNICATION SETTING)

(2) Precedence in communication settings
When settings are made by GT Designer3 or the Utility, the latest setting is effective.

61.7 System Configuration Examples

The following shows a system configuration example in the case of the microcomputer connection (serial).

■ System configuration

The system configuration example illustrated below is explained in this section.

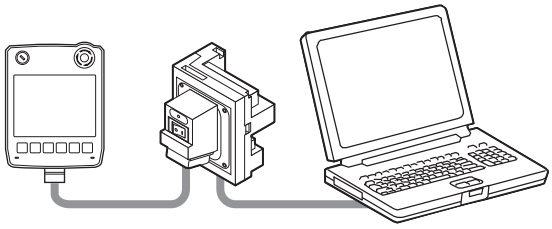

IBM-PC/AT-compatible PC
(Microsoft® Visual C++® Ver.6.0)

■ Communication settings on GOT side and monitor screen settings

(1) Transmission settings

Set the transmission settings of the GOT.
The transmission settings in the microcomputer connection (serial) are made at [Detail Setting] on GT Designer3.

61.6.2 Communication detail settings

Setting item	Settings
Transmission Speed	38400bps
Data Bit	8bits
Stop Bit	1bit
Parity	Even
Interrupt Data Byte	1 byte
Host Address (0 to 31)	0
Format	1
Special Interrupt Code	None
Control Method	None
32bit Storage	LH Order

(2) Monitor screen settings

The following shows the monitor screen settings in this system configuration example.

(a) Common settings

Set D20 to the screen switching device (base screen).

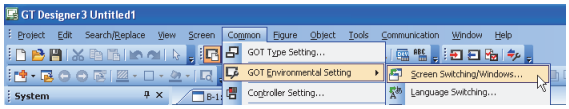

1. Select [Common] → [GOT Environmental Setting] → [Screen Switching/Window] to display [Environment Setup] on GT Designer3.

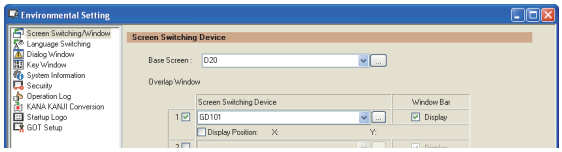

2. Set D20 to the screen switching device (base screen).

(b) Monitor screen image
Create the following screens by GT Designer3.

Base screen 1

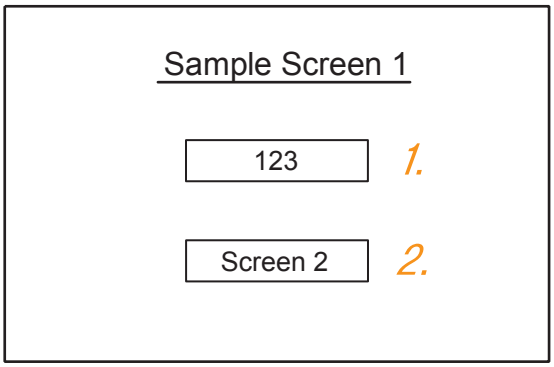

1. Numerical display
By setting this with the numerical value display function, the device value of D21 can be monitored. The device value is incremented only while [Sample Screen 1] is displayed.

2. Switch 1
This is the screen switching switch to [Sample Screen 2]. Touching this changes the base screen to [Sample Screen 2].

Base screen 2

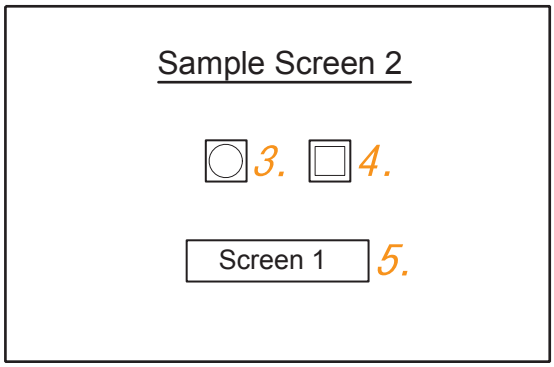

3. Bit lamp
The device status of D22.b0 is displayed as a lamp.

4. Switch 2
This is a bit alternate switch for changing the state of D22.b0.

5. Switch 3
This is the screen switching switch to [Sample Screen 1]. Touching this changes the base screen to [Sample Screen 1].

Numerical display

No.	Basic setting				
	Device/Style				
	Device	Communication format	Display format	Display size	Number of display digits
1.	D21	Unsigned BIN16	Signed Decimal	Arbitrary	4

Switch

No.	Basic setting					
	Operation setting					
	Action	Next Screen	Device	Data Format	Set value	Operation setting
2.	Screen Switching Base	Fixed Screen No.2	-	-	-	-
	Word	-	D13	Signed BIN16	Fixed value 1	-
4.	Bit	-	D22.b0	-	-	Alternate
5.	Screen Switching Base	Fixed Screen No.1	-	-	-	-
	Word	-	D13	Signed BIN16	Fixed value 255	-

Bit lamp

No.	Basic setting			
	Device/Style			
	Lamp Type	Device	Shape	Shape Attribute
3.	Bit	D22.b0	Arbitrary	Arbitrary

■ Outline of system operation

The following describes the processing on the host side, display/processing on the GOT side, and data transfer packets.
(Assuming that host side programs use programs which perform the processing on host side shown below.)

Processing	Processing on host side		Packet used for data transfer	Display/ Processing on GOT side
Initial processing	Opens the port.		-	-
	Writes "1" to the screen switching device (D20).		Screen 1 batch switching write packet*1	Displays base screen 1.
	Receives a response from the GOT.		-	-
	Judges whether or not there is an error in the response from the GOT.		-	-
	Writes an initial value to device (D21).		Batch numerical value display write packet*2	Displays "0" on the numerical value display on base screen 1.
Reception of response/ interrupt from GOT	When receiving a response to writing to device (D21) from the GOT	Issues the current value acquisition request to device (D21).	Batch numerical value display read packet*3	Increments the numerical value displayed on base screen 1. (The host side repeats the processing on the left as long as base screen 1 is displayed.)
	When receiving a response to reading of device (D21) from the GOT	Creates the next device value (D21).	-	
		Calculates the sum check of the send packet.	-	
		Issues the update request of device (D21).	Batch numerical value display write packet*2	
	When receiving an interrupt requesting the base screen switching from 1 to 2	Sets the state of the base screen to base screen 2.	Interrupt receive packet*6	Touch touch switch 1 to switch to base screen 2. Notify the host by an interrupt.
	When receiving an interrupt requesting the base screen switching from 2 to 1	Sets the state of the base screen to base screen 1.	Interrupt receive packet*6	Touch touch switch 3 to switch to base screen 1. Notify the host by an interrupt.
End processing (only when receiving an error response)	Close the port.		-	-

*1 Displays the send packet structure of the screen 1 batch switching write packet.

STX	Command		Address				Number of points		Data 1 (D20)				ETX	Sum Check	
	W	D	0	0	2	0	0	1	0	0	0	1		8	2
02H	57H	44H	30H	30H	32H	30H	30H	31H	30H	30H	30H	31H	03H	38H	32H
	(H)	(L)	(H)	–	–	(L)	(H)	(L)	(H)	–	–	(L)		(H)	(L)

Sum check is performed in this range.

*2 Displays the send packet structure of the numerical value display batch write packet.

STX	Command		Address				Number of points		Data 1 (D21)	ETX	Sum check
	W	D	0	0	2	1	0	1	(any value)		(Changes according to data section.)
02H	57H	44H	30H	30H	32H	31H	30H	31H		03H	
	(H)	(L)	(H)	–	–	(L)	(H)	(L)	(H) – – (L)		(H) (L)

Sum check is performed in this range.

*3 Displays the send packet structure of the numerical value display batch read packet.

STX	Command		Address				Number of points		ETX	Sum Check	
	R	D	0	0	2	1	0	1		B	D
02H	52H	44H	30H	30H	32H	31H	30H	31H	03H	42H	44H
	(H)	(L)	(H)	–	–	(L)	(H)	(L)		(H)	(L)

Sum check is performed in this range.

*4 Displays the receive packet structure of the batch write response packet.

When normally operated

ACK
06H

When an error occurred

NAK
15H

*5 Displays the receive packet structure of the batch read response packet.

When normally operated

STX	Data	ETX	Sum check
02H	(any data)	03H	(Changes according to data section.)
	(H) – – (L)		(H) (L)

Sum check is performed in this range.

When an error occurred

NAK
15H

*6 Displays the receive packet structure of the interrupt receive packet.

Output value
Interrupt data (value of D13)

61.8 Device Range that Can Be Set

For details on the device range of controllers that can be used on GT14 Handy, refer to the following manuals.

☞ GT Designer3 Version1 Screen Design Manual (Fundamentals)

☞ GOT1000 Series Connection Manual (Microcomputer, MODBUS Products, Peripherals) for GT Works3

61.9 Precautions

■ GOT clock control

The settings of "time adjusting" or "time broadcast" made on the GOT will be disabled on the PLC. Use the dedicated commands to set or read out the clock data of microcomputer.

62. MICROCOMPUTER CONNECTION (ETHERNET)

62.1 Microcomputer Connection (Ethernet)

The "microcomputer connection (Ethernet)" is a function by which data can be written or read from a PC, microcomputer board, PLC, etc. (hereinafter referred to as "host") to virtual devices of the GOT after connecting the host to the GOT with the Ethernet.
Interrupt output is also available from the GOT to the host.

For the flow of the data processing, such as reading or writing data and interrupt output, refer to the following.

61.1 Microcomputer Connection (Serial)

62.2 System Configuration

62.2.1 For the microcomputer connection (Ethernet)

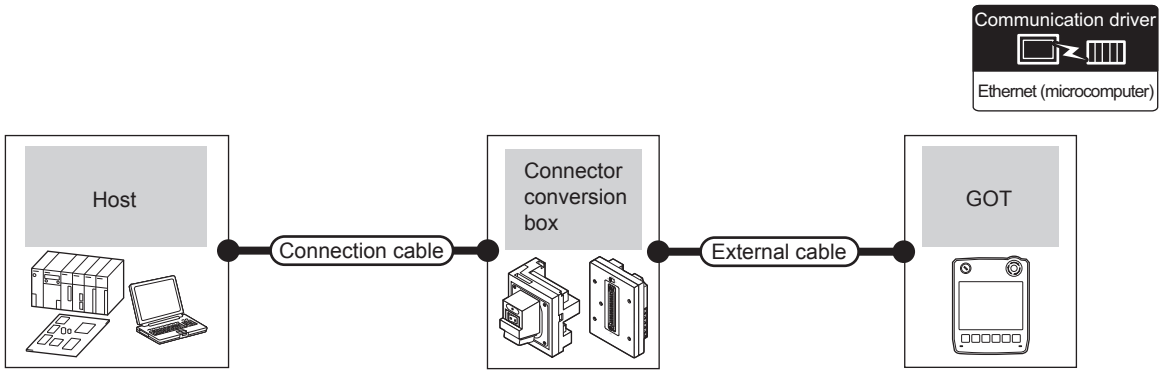

Host	Connection cable*1	Connector conversion box	External cable*3	GOT model	Maximum segment length	Number of connectable equipment
Communication type	Cable model					
Ethernet	• 10BASE-T Shielded twisted pair cable (STP) or Unshielded twisted pair cable (UTP) Category 3, 4, and 5 • 100BASE-TX Shielded twisted pair cable (STP) Category 5 and 5e	GT16H-CNB-42S	GT14H-C30-42P (3m) GT14H-C60-42P (6m) GT14H-C100-42P (10m)	GT14 Handy	100m*2	Unlimited number of GOTs for 1 host
		GT16H-CNB-37S	GT11H-C30-37P (3m) GT11H-C60-37P (6m) GT11H-C100-37P (10m)			

*1 The destination connected with the twisted pair cable varies with the configuration of the applicable Ethernet network system.
Connect to the Ethernet module, hub, transceiver or other system equipment corresponding to the applicable Ethernet network system.
Use cables, connectors, and hubs that meet the IEEE802.3 10BASE-T/100BASE-TX standard.
The use of shielded twisted pair cable (STP) is recommended in environments in which the performance against noise is required.

*2 A length between a hub and a node.
The maximum distance differs depending on the Ethernet device to be used.
The following shows the number of the connectable nodes when a repeater hub is used.
- 10BASE-T: Max. 4 nodes for a cascade connection (500m)
- 100BASE-TX: Max. 2 nodes for a cascade connection (205m)

When switching hubs are used, the cascade connection between the switching hubs has no logical limit for the number of cascades.
For the limit, contact the switching hub manufacturer.

*3 Use C or later version of GT11H-C□□-37P.

62.3 Device Data Area

The following shows a list of virtual devices inside the GOT available in the microcomputer connection (Ethernet), and the address specification values for each data format.

The address specification of the virtual devices differs depending on the data format.*1

Virtual device*2			Address specification value				Refer to
Name	Device range (decimal)	Device type	Format 1, 2	Format 3, 4	Format 5	Format 6, 7, 8, 9	
D	0 to 4095	Word	0 to 4095	8000 to 9FFFH	0000 to 0FFFH	D0 to 4095	62.3.1
R	0 to 4095	Word	4096 to 8191	0000 to 1FFFH	1000 to 1FFFH	R0 to 4095	62.3.2
L	0 to 2047	Bit	8192 to 8319	A000 to A0FFH	2000 to 207FH	L0 to 2047	62.3.3
M	0 to 2047	Bit	8320 to 8447	2000 to 20FFH	2080 to 20FFH	M0 to 2047	62.3.4
SD	0 to 15	Word	8448 to 8463	2100 to 211FH (3000 to 300DH)*3	2100 to 210FH	SD0 to 15	62.3.5
SM	0 to 63	Bit	8464 to 8467	2200 to 2207H	2110 to 2113H	SM0 to 63	62.3.6

*1 For the address specification method for each data format, refer to the following.

62.4 Message Formats

- Formats 1, 2 : GOT-A900 Series microcomputer connection
- Formats 3, 4 : GOT-F900 Series microcomputer connection
- Format 5 : Digital Electronics Corporation's memory link method
- Formats 6, 7 : 4E frame
- Formats 8, 9 : 3E frame

*2 When reusing GOT900 Series project data

- GOT-A900 Series virtual devices (D0 to 2047)
  Can be used as they are without changing the assignments.
- GOT-F900 Series virtual devices
  Since some of the assigned virtual device values differ as indicated below, change the assignment using device batch edit of GT Designer3.
  Refer to the following manual for device batch edit of GT Designer3.

GT Designer3 Version1 Screen Design Manual

GOT1000 Series virtual devices	GOT-F900 Series virtual devices
D0 to 2047	-
D2048 to 4095	-
R0 to 4095	D0 to 4095
L0 to 2047	-
M0 to 2047	M0 to 2047
SD0 to 15	D8000 to 8015 GD0 to 6
SM0 to 63	M8000 to 8063

*3 Access to SD3 to 9 can also be made by the specification of the addresses (3000 to 300DH) of GD0 to 6 on the GOT-F900 Series.

POINT

Values of virtual devices inside the GOT

When the GOT is turned OFF or reset, values are cleared to their defaults (bit devices: OFF, word devices: 0). Values are held in the memory when project data are written to the GOT.

62.3.1 D devices

The D devices are word devices into which GOT communication errors, clock data or other information are stored. The user can also store data using the user area.

■ List of D devices

The following lists the D devices (virtual devices inside the GOT).

Address	Description	Set side
D0 to 2	Unused	-
D3	Communication error status Stores the communication error details of GOT. 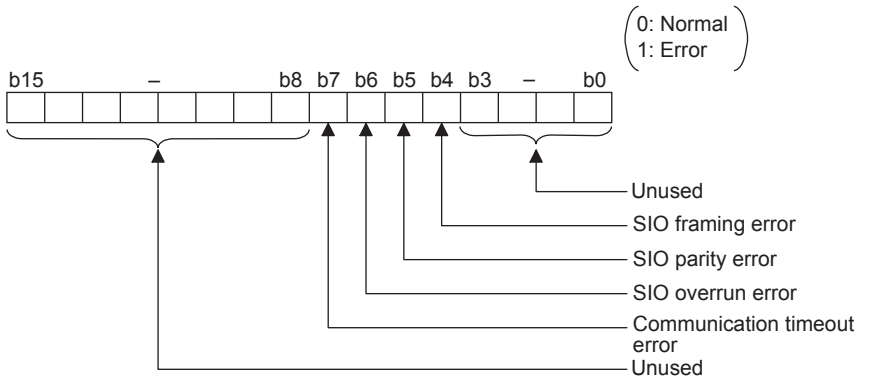 • b4 to 6 turn ON when an SIO error occurs, and turn OFF when a request message from the host is received successfully after the error occurrence. • b7 turns ON about 3 seconds after the host side DTR becomes OFF, and turns OFF when transmission is performed successfully to the host after the error occurrence.	System
D4	Clock data (year) 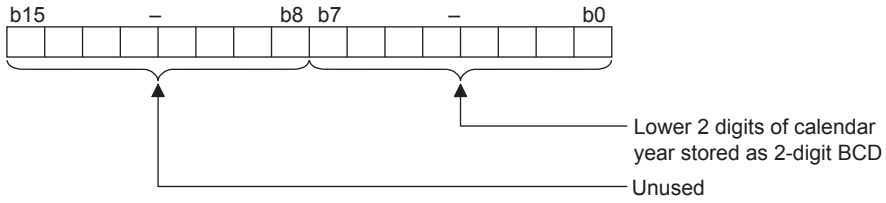	
D5	Clock data (month) 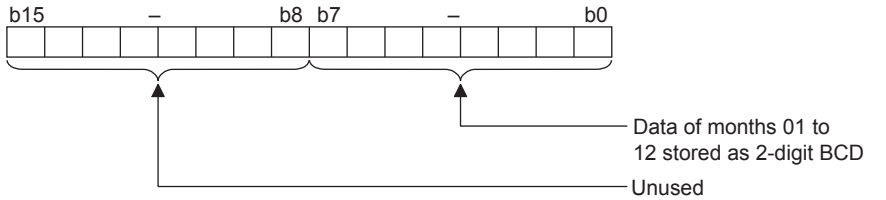	
D6	Clock data (day) 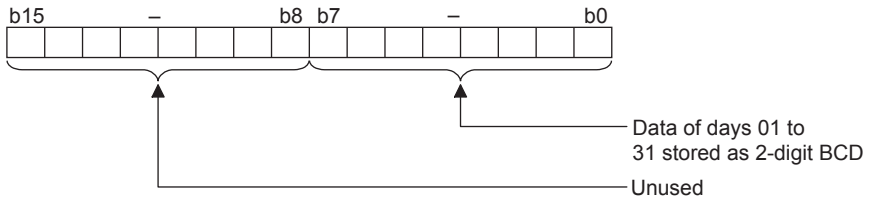	

(Continued to next page)

(From previous page)

Address	Description	Set side
D7	Clock data (hour) 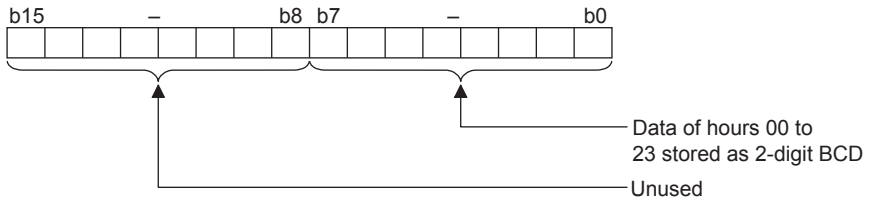	System
D8	Clock data (minute) 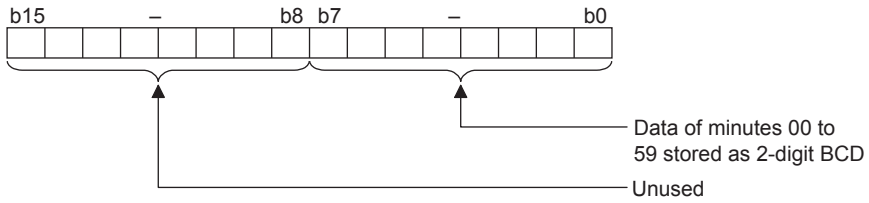	
D9	Clock data (second) 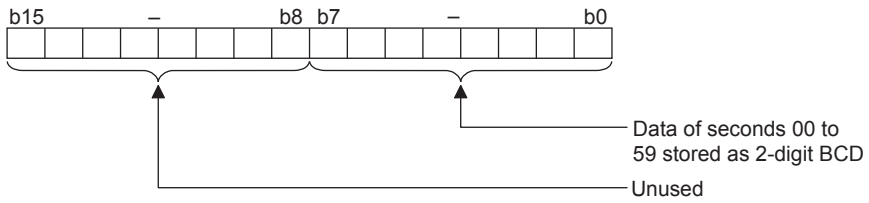	
D10	Clock data (day of week)*1 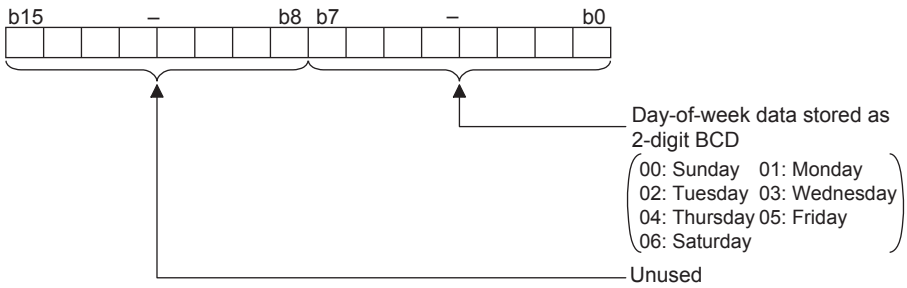	
D11, D12	Unused	-

(Continued to next page)

*1 If a wrong day of the week is set by the clock data setting command, the clock data will differ from the time displayed on the utility.
Example: When October 01, 2009 (Tuesday) is set by the clock data setting command (the actual day of the week is Thursday)
"02" is stored to D10 although Thursday (THU) will be displayed on the utility time display.

(From previous page)

Address	Description	Set side
D13	Interrupt output When data are written to D13 and D14 from a GOT touch switch, for example, the data of D13 and D14 are transmitted (interrupt output) to the host side.*1*2 The data amount (number of bytes) to be interrupt-output is set at "Interrupt Data Byte" in "Communication Detail Settings". (☞ 62.5.1 Setting communication interface (Communication settings)) • Output value when 1 is set to "Interrupt Data Byte" in "Communication Detail Settings" 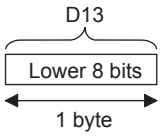	User
D14	• Output value when 2 is set to "Interrupt Data Byte" in "Communication Detail Settings" 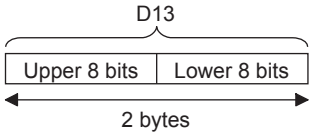 • Output value when 4 is set to "Interrupt Data Byte" in "Communication Detail Settings" (1) When setting the LH order to [32bit Storage] for the communication detail settings 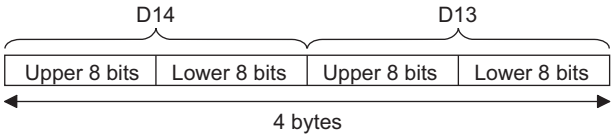 (2) When setting the HL order to [32bit Storage] for the communication detail settings 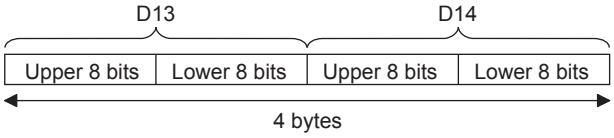	
D15 to 19	Unused	-
D20 to 2031	User area	User
D2032 to 2034	Unused	-
D2035	1-second binary counter The counter is incremented at 1-second intervals after the GOT is turned ON. (The time elapsed after GOT is turned ON is stored in 1-second units.) Data are stored in binary format.	System
D2036 to 4095	User area	User

*1 After writing data, the interrupt is output within a period of 1 to 10ms.
*2 When data are written to D13 and D14 from the host side, interrupt output is not performed.

POINT

(1) The side where virtual devices are set
System: Set on the system side.
User: Set on the user side (by sending request messages from host or using the touch switches, etc. on the GOT).

(2) Interrupt output (D13, D14)
- To disable the interrupt output, turn ON SM52 (interrupt code output disable flag). (☞ 62.3.6 SM devices)
- To issue interrupts, set the data length to "8 bits" at "Communication Detail Settings".
  (☞ 62.5.1 Setting communication interface (Communication settings))
- When "7 bits" is set, the MSB (8th bit) is ignored. (Example: FFH → 7FH)

■ Differences in address specifications by data format

The address specification of devices varies depending on the data format.*1
The following shows the address specification values for each data format.

Address	Address specification value				
	Formats 1, 2	Formats 3, 4		Format 5	Formats 6, 7, 8, 9
D0	0	8000H 8001H	8000H (Upper 8 bits) 8001H (Lower 8 bits)	0000H	D0
D1	1	8002H 8003H	8002H (Upper 8 bits) 8003H (Lower 8 bits)	0001H	D1
..	..	..		..	..
D4095	4095	9FFEH 9FFFH	9FFEH (Upper 8 bits) 9FFFH (Lower 8 bits)	0FFFH	D4095

*1 For the address specification method for each data format, refer to the following.

62.4 Message Formats

- Formats 1, 2 : GOT-A900 Series microcomputer connection
- Formats 3, 4 : GOT-F900 Series microcomputer connection
- Format 5 : Digital Electronics Corporation's memory link method
- Formats 6, 7 : 4E frame
- Formats 8, 9 : 3E frame

62.3.2 R devices

The R devices are word devices into which user data are stored.
All of these devices can be used as a user area.

■ List of R devices and differences in address specification by data format

The following shows the R devices (virtual devices inside the GOT).
The address specification values different depending on the data format are also given below.*1

Address	Address specification value				
	Formats 1, 2	Formats 3, 4		Format 5	Formats 6, 7, 8, 9
R0	4096	0000H 0001H	0000H (Upper 8 bits) 0001H (Lower 8 bits)	1000H	R0
R1	4097	0002H 0003H	0002H (Upper 8 bits) 0003H (Lower 8 bits)	1001H	R1
..	..	..		..	..
R4095	8191	1FFEH 1FFFH	1FFEH (Upper 8 bits) 1FFFH (Lower 8 bits)	1FFFH	R4095

*1 For the address specification method for each data format, refer to the following.

62.4 Message Formats

- Formats 1, 2 : GOT-A900 Series microcomputer connection
- Formats 3, 4 : GOT-F900 Series microcomputer connection
- Format 5 : Digital Electronics Corporation's memory link method
- Formats 6, 7 : 4E frame
- Formats 8, 9 : 3E frame

62.3.3 L devices

The L devices are bit devices into which user data are stored.
All of these devices can be used as a user area.

■ List of L devices and differences in address specification by data format

The following shows the L devices (virtual devices inside the GOT).

The address specification values different depending on the data format are also given below.*1

Address								Address specification value			
b7	b6	b5	b4	b3	b2	b1	b0	Formats 1, 2	Formats 3, 4	Format 5	Formats 6, 7, 8, 9
L7	L6	L5	L4	L3	L2	L1	L0	8192	A000H	2000H	Same as address column on left*2
L15	L14	L13	L12	L11	L10	L9	L8		A001H		
L23	L22	L21	L20	L19	L18	L17	L16	8193	A002H	2001H	
L31	L30	L29	L28	L27	L26	L25	L24		A003H		
..								..	..	..	
L2039	L2038	L2037	L2036	L2035	L2034	L2033	L2032	8319	A0FEH	207FH	
L2047	L2046	L2045	L2044	L2043	L2042	L2041	L2040		A0FFH		

*1 For the address specification method for each data format, refer to the following.

62.4 Message Formats

- Formats 1, 2 : GOT-A900 Series microcomputer connection
- Formats 3, 4 : GOT-F900 Series microcomputer connection
- Format 5 : Digital Electronics Corporation's memory link method
- Formats 6, 7 : 4E frame
- Formats 8, 9 : 3E frame

*2 For reading or writing data in word units, specify the addresses in 16-point units. (Example: L0, L16, L32, etc.)

62.3.4 M devices

The M devices are bit devices into which user data are stored.
All of these devices can be used as a user area.

■ List of M devices and differences in address specification by data format

The following shows the M devices (virtual devices inside the GOT).

The address specification values different depending on the data format are also given below.*1

Address								Address specification value			
b7	b6	b5	b4	b3	b2	b1	b0	Formats 1, 2	Formats 3, 4	Format 5	Formats 6, 7, 8, 9
M7	M6	M5	M4	M3	M2	M1	M0	8320	2000H	2080H	Same as address column on left*2
M15	M14	M13	M12	M11	M10	M9	M8		2001H		
M23	M22	M21	M20	M19	M18	M17	M16	8321	2002H	2081H	
M31	M30	M29	M28	M27	M26	M25	M24		2003H		
..								..	..	..	
M2039	M2038	M2037	M2036	M2035	M2034	M2033	M2032	8447	20FEH	20FFH	
M2047	M2046	M2045	M2044	M2043	M2042	M2041	M2040		20FFH		

*1 For the address specification method for each data format, refer to the following.

62.4 Message Formats

- Formats 1, 2 : GOT-A900 Series microcomputer connection
- Formats 3, 4 : GOT-F900 Series microcomputer connection
- Format 5 : Digital Electronics Corporation's memory link method
- Formats 6, 7 : 4E frame
- Formats 8, 9 : 3E frame

*2 For reading or writing data in word units, specify the addresses in 16-point units. (Example: M0, M16, M32, etc.)

62.3.5 SD devices

The SD devices are word devices into which GOT communication errors (error codes), clock data and other information are stored.

■ List of SD devices

The following lists the SD devices (virtual devices inside the GOT).

Address	Description	Set side
SD0 SD1	100ms counter (32bits) The counter is incremented at 100ms intervals after GOT is turned ON. (The time elapsed after GOT is turned ON is stored in 100ms units.) (1) When setting the LH order to [32bit Storage] for the communication detail settings The lower and upper bits are stored in SD0 and SD1 respectively. 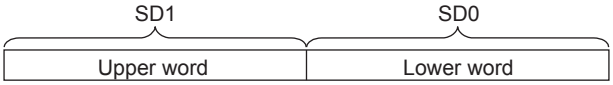 (2) When setting the HL order to [32bit Storage] for the communication detail settings The upper and lower bits are stored in SD0 and SD1 respectively. 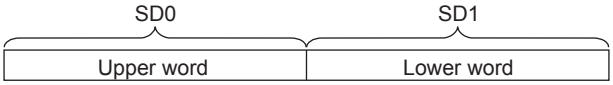	System
SD2*1	Communication error status An error data (error code) occurred during communication is stored. •Host Address (Communication error that occurred on the request destination GOT) 0: No error 1: Parity error 2: Framing error 3: Overrun error 4: Communication message error 5: Command error 6: Clock data setting error •Other station (Communication error that occurred on another GOT when multiple GOTs are connected) 101: Parity error 102: Framing error 103: Overrun error 104: Communication message error 105: Timeout error (No station of the specified address exists.) 106: Multiple units not connectable 107: Clock data setting error	
SD3	Clock data (second): Second data of 00 to 59 is stored.	
SD4	Clock data (minute): Minute data of 00 to 59 is stored.	
SD5	Clock data (hour): Hour data of 00 to 23 is stored.	
SD6	Clock data (day): Day data of 01 to 31 is stored.	
SD7	Clock data (month): Month data of 01 to 12 is stored.	
SD8	Clock data (year) 4-digit year data is stored.	System
SD9	Clock data (day of week)*2 Day-of-the-week data is stored. 0: Sunday 1: Monday 2: Tuesday 3: Wednesday 4: Thursday 5: Friday 6: Saturday	
SD10 to 15	Unused	-

*1 For details and corrective actions for the errors (error codes) that are stored into SD2, refer to the following:

■ Details and actions for errors (error codes) stored into SD2

*2 If a wrong day of the week is set by the clock data setting command, the clock data will differ from the time displayed on the utility.
Example: When October 01, 2009 (Tuesday) is set by the clock data setting command (the actual day of the week is Thursday)
"2" is stored to SD9 although Thursday (THU) will be displayed on the utility time display.

POINT

The side where virtual devices are set

System: Set on the system side.

User: Set on the user side (by sending request messages from host or using the touch switches, etc. on the GOT).

■ Details and actions for errors (error codes) stored into SD2

Error code	Description	Measures
0	No error	-
1, 101	Parity error The parity bit does not match.	• Check the communication cable and communication module attachment. • Check the settings of "Communication Detail Settings". • Match the GOT and host transmission settings.
2, 102	Framing error The data bit and/or stop bit are not correct.	
3, 103	Overrun error The next data was transmitted from the host before GOT completes the processing of the data received.	• Check the settings of "Communication Detail Settings". • Decrease the transmission speed.
4, 104	Communication message error EXT/CR could not be found before the upper limit of the receive buffer was exceeded.	• Check the communication cable and communication module attachment. • Check the settings of "Communication Detail Settings". • Review the contents of the message to transmit.
5	Command error An unsupported command was used.	• Review the contents of the message to transmit. • Check the commands in the message. (☞ 62.4.2 List of commands)
105	Timeout error There is no response from the GOT, or the station of the specified address does not exist.	• Check the communication cable and communication module attachment. • Check the settings of "Communication Detail Settings". • Review the contents of the message to transmit.
106	Multiple units not connectable The RS-232 port is occupied.	• Check the communication cable and communication module attachment. • Check the settings of "Communication Detail Settings". • Check to see if the RS-232 port is occupied.
6, 107	Clock data setting error The setting value of the clock data has error.	• Review the contents of the message to transmit. • Check whether the non-existent data is set (e.g. setting "07" at the day of the week) as clock data.

■ Differences in address specifications by data format

The address specification of devices varies depending on the data format.[*1]
The following shows the address specification values for each data format.

Address	Address specification value				
	Formats 1, 2	Formats 3, 4[*2]		Format 5	Formats 6, 7, 8, 9
SD0	8448	2100H 2101H	2100H (Upper 8 bits) 2101H (Lower 8 bits)	2100H	SD0
SD1	8449	2102H 2103H	2102H (Upper 8 bits) 2103H (Lower 8 bits)	2101H	SD1
SD2	8450	2104H 2105H	2104H (Upper 8 bits) 2105H (Lower 8 bits)	2102H	SD2
SD3	8451	2106H (3000H) 2107H (3001H)	2106H (3000H) (Upper 8 bits) 2107H (3001H) (Lower 8 bits)	2103H	SD3
SD4	8452	2108H (3002H) 2109H (3003H)	2108H (3002H) (Upper 8 bits) 2109H (3003H) (Lower 8 bits)	2104H	SD4
SD5	8453	210AH (3004H) 210BH (3005H)	210AH (3004H) (Upper 8 bits) 210BH (3005H) (Lower 8 bits)	2105H	SD5
SD6	8454	210CH (3006H) 210DH (3007H)	210CH (3006H) (Upper 8 bits) 210DH (3007H) (Lower 8 bits)	2106H	SD6
SD7	8455	210EH (3008H) 210FH (3009H)	210EH (3008H) (Upper 8 bits) 210FH (3009H) (Lower 8 bits)	2107H	SD7
SD8	8456	2110H (300AH) 2111H (300BH)	2110H (300AH) (Upper 8 bits) 2111H (300BH) (Lower 8 bits)	2108H	SD8
SD9	8457	2112H (300CH) 2113H (300DH)	2112H (300CH) (Upper 8 bits) 2113H (300DH) (Lower 8 bits)	2109H	SD9

*1 For the address specification method for each data format, refer to the following.

62.4 Message Formats

- Formats 1, 2 : GOT-A900 Series microcomputer connection
- Formats 3, 4 : GOT-F900 Series microcomputer connection
- Format 5 : Digital Electronics Corporation's memory link method
- Formats 6, 7 : 4E frame
- Formats 8, 9 : 3E frame

*2 SD3 to 9 correspond to GD0 to 6 on the GOT-F900 Series.
Access to SD3 to 9 can be also made by the specification of the addresses (3000 to 300DH) of GD0 to 6 on the GOT-F900 Series.

62.3.6 SM devices

The SM devices are bit devices into which interrupt outputs and clock data that turn ON/OFF at 1-second cycles.

■ List of SM devices

The following shows the SM devices (virtual devices inside the GOT).

<table>
<tr><th>Address</th><th>Description</th><th>Set side</th></tr>
<tr><td>SM0 to 49</td><td>Interrupt output
When the ON/OFF state of SM0 to 49 is changed by a touch switch on the GOT, for example, the interrupt codes shown below are transmitted (interrupt output) to the host side.*1*2
The data amount (number of bytes) to be interrupt-output is set at "Interrupt Data Byte" in "Communication Detail Settings". (62.5.1 Setting communication interface (Communication settings))
<table>
<tr><th>Address</th><th>Event type</th><th>Interrupt code</th></tr>
<tr><td rowspan="2">SM0</td><td>Changed from OFF to ON</td><td>50H</td></tr>
<tr><td>Changed from ON to OFF</td><td>51H</td></tr>
<tr><td rowspan="2">SM1</td><td>Changed from OFF to ON</td><td>52H</td></tr>
<tr><td>Changed from ON to OFF</td><td>53H</td></tr>
<tr><td rowspan="2">SM2</td><td>Changed from OFF to ON</td><td>54H</td></tr>
<tr><td>Changed from ON to OFF</td><td>55H</td></tr>
<tr><td>. .</td><td>. .</td><td>. .</td></tr>
<tr><td rowspan="2">SM48</td><td>Changed from OFF to ON</td><td>B0H</td></tr>
<tr><td>Changed from ON to OFF</td><td>B1H</td></tr>
<tr><td rowspan="2">SM49</td><td>Changed from OFF to ON</td><td>B2H</td></tr>
<tr><td>Changed from ON to OFF</td><td>B3H</td></tr>
</table></td><td>User</td></tr>
<tr><td>SM50</td><td>1-second cycle clock
Turns ON/OFF at a 1-second cycle.
</td><td rowspan="2">System</td></tr>
<tr><td>SM51</td><td>2-second cycle clock
Turns ON/OFF at a 2-second cycle.
</td></tr>
<tr><td>SM52</td><td>Interrupt code output disable flag
Enables or disables the output of the interrupt code.
OFF: Interrupt code output enabled ON: Interrupt code output disabled
When set to disable the interrupt code output, no interrupt data are output to the host.
(Relevant devices: D13, D14, SM0 to 49)</td><td>User</td></tr>
<tr><td>SM53 to 63</td><td>Unused</td><td>-</td></tr>
</table>

*1 After the ON/OFF state is changed, the interrupt data are output within a period of 1 to 10ms.
*2 When the ON/OFF state of SM0 to 49 is changed from the host side, interrupt output is not performed.

POINT

(1) The side where virtual devices are set
System: Set on the system side.
User: Set on the user side (by sending request messages from host or using the touch switches, etc. on the GOT).

(2) Interrupt outputs (SM0 to 49)
- To disable the interrupt output, turn ON SM52 (interrupt code output disable flag). (62.3.6 SM devices)
- To issue interrupts, set the data length to "8 bits" at "Communication Detail Settings".
(62.5.1 Setting communication interface (Communication settings))
- When "7 bits" is set, the MSB (8th bit) is ignored. (Example: FFH → 7FH)

■ Differences in address specifications by data format

The address specification of devices varies depending on the data format.[*1]
The following shows the address specification values for each data format.

Address								Address specification value			
b7	b6	b5	b4	b3	b2	b1	b0	Format 1, 2	Format 3, 4	Format 5	Format 6, 7, 8, 9
SM7	SM6	SM5	SM4	SM3	SM2	SM1	SM0	8464	2200H	2110H	*2*3
SM15	SM14	SM13	SM12	SM11	SM10	SM9	SM8		2201H		
SM23	SM22	SM21	SM20	SM19	SM18	SM17	SM16	8465	2202H	2111H	
SM31	SM30	SM29	SM28	SM27	SM26	SM25	SM24		2203H		
SM39	SM38	SM37	SM36	SM35	SM34	SM33	SM32	8466	2204H	2112H	
SM47	SM46	SM45	SM44	SM43	SM42	SM41	SM40		2205H		
Unused			SM52	SM51	SM50	SM49	SM48	8467	2206H	2113H	
Unused								-	-		

*1 For the address specification method for each data format, refer to the following.

62.4 Message Formats

- Formats 1, 2 : GOT-A900 Series microcomputer connection
- Formats 3, 4 : GOT-F900 Series microcomputer connection
- Format 5 : Digital Electronics Corporation's memory link method
- Formats 6, 7 : 4E frame
- Formats 8, 9 : 3E frame

*2 In formats 6 and 7, values are specified within a range of SM0 to 52.

*3 For reading or writing data in word units, specify the addresses in 16-point units. (Example: SM0, SM16, SM32, etc.)

62.4 Message Formats

This section describes the format of messages that can be used in the microcomputer connection (Ethernet).

62.4.1 Data format type and application

■ Data format type and application

Communication is possible using any of the data formats shown below.

(1) Formats 1, 2 (GOT-A900 Series microcomputer connection)
This is the compatible message format with when a microcomputer connection is established with the GOT-A900 Series.

Type	Name	Description	Refer to
Format 1	GOT-A900 series microcomputer connection (ASCII)	This format is used when the GOT is connected to the host in a 1:1 connection. The data format is ASCII.	62.4.3
Format 2	GOT-A900 series microcomputer connection (Binary)	This format is used when the GOT is connected to the host in a 1:1 connection. The data format is Binary.	

(2) Formats 3, 4 (GOT-F900 series microcomputer connection)
This is the compatible message format with when a microcomputer connection is established with the GOT-F900 Series.

Type	Name	Description	Refer to
Format 3	GOT-F900 series microcomputer connection (ASCII)	Use this format when establishing a 1:1 or m:n connection between the GOT and the host. The data format is ASCII.	62.4.4
Format 4	GOT-F900 series microcomputer connection (Binary)	Use this format when establishing a 1:1 or m:n connection between the GOT and the host. The data format is Binary.	

(3) Format 5 (Digital Electronics Corporation's memory link method)
This is the compatible message format with the protocol of the Digital Electronics Corporation's memory link method.

Type	Name	Description	Refer to
Format 5	Digital Electronics Corporation's memory link method	This is the basic format of the Digital Electronics Corporation's memory link method.	62.4.5

(4) Formats 6, 7 (4E frame)
This is the compatible message format with when a communication is performed using the MC protocol of Q/QnA Series serial communication module.

Type	Name	Description	Refer to
Format 6	4E frame (ASCII)	This is the basic format of the MC protocols. The data format is ASCII.	62.4.6
Format 7	4E frame (Binary)	This is the basic format of the MC protocols. The data format is Binary.	

(5) Formats 8, 9 (3E frame)
This is the compatible message format with when a communication is performed using the MC protocol of Q/QnA Series serial communication module.

Type	Name	Description	Refer to
Format 8	3E frame (ASCII)	This is the basic format of the MC protocols. The data format is ASCII.	62.4.7
Format 9	3E frame (Binary)	This is the basic format of the MC protocols. The data format is Binary.	

■ How to set data format

Set the data format at [Detail Setting] in GT Designer3.
For details of the data format setting method, refer to the following.

☞ 62.5.1 Setting communication interface (Communication settings)

62.4.2 List of commands

The following shows the list of commands available in each data format.

■ List of commands for formats 1, 2 (GOT-A900 Series microcomputer connection)

Command		Command name	Description	Max. number of points processed
Symbol	ASCII code			
RD	52H 44H	Batch read in word units	Reads bit devices in 16-point units.	64 words (1024 points)
			Reads word devices in 1-point units.	64 points
WD	57H 44H	Batch write in word units	Writes to bit devices in 16-point units.	64 words (1024 points)
			Writes to word devices in 1-point units.	64 points
RR	52H 52H	Random read in word units*1	Reads multiple different bit devices in 16-point units.	64 words (1024 points)
			Reads multiple different word devices in 1-point units.	64 points
RW	52H 57H	Random write in word units*1	Writes to multiple different bit devices in 16-point units.	64 words (1024 points)
			Writes to multiple different word devices in 1-point units.	64 points
TR	54H 52H	Read clock data	Reads the clock data of the GOT.	-
TS	54H 53H	Set clock data	Sets the clock data of the GOT.	-

*1 Mixed specification of bit devices and word devices is also possible.

■ List of commands for formats 3, 4 (GOT-F900 series microcomputer connection)

Command		Command name	Description	Max. number of points processed
Symbol	ASCII code			
0	30H	Batch read (w/out station No.)	Reads bit devices in byte units.	255bytes (2040 points)
			Reads word devices in byte units.	255bytes (127 points)
A	41H	Batch read (w/station No.)	Reads bit devices in byte units.	255bytes (2040 points)
			Reads word devices in byte units.	255bytes (127 points)
1	31H	Batch write (w/out station No.)	Writes to bit devices in byte units.	255bytes (2040 points)
			Writes to word devices in byte units.	255bytes (127 points)
B	42H	Batch write (w/station No.)	Writes to bit devices in byte units.	255bytes (2040 points)
			Writes to word devices in byte units.	255bytes (127 points)
3	33H	Multi-point write in bit units (w/out station No.)	Writes bit patterns (bit ON/OFF, inversion, direct specification) in 1-point units (8 bits for 1 point) to a specified device.	70bytes (560 points)
D	44H	Multi-point write in bit units (w/station No.)		
4	34H	Fill command (w/out station No.)	Writes the same value to a range of specified devices.	-
E	45H	Fill command (w/station No.)		
5	35H	Set clock data (w/out station No.)	Sets the clock data of the GOT.	-
F	46H	Set clock data (w/station No.)		
6	36H	Read clock data (w/out station No.)	Reads the clock data of the GOT.	-
G	47H	Read clock data (w/station No.)		

■ List of commands for format 5 (Digital Electronics Corporation's memory link method)

Command		Command name	Description	Max. number of points processed
Symbol	ASCII code			
R	52H	Batch read in word units	Reads bit devices in 16-point units.	64 words (1024 points)
			Reads word devices in 1-point units.	64 points
W	57H	Batch write in word units	Writes to bit devices in 16-point units.	64 words (1024 points)
			Writes to word devices in 1-point units.	64 points
I	49H	Interrupt inquiry	Issues an interrupt inquiry.	-

■ List of commands for formats 6, 7 (4E frame) and 8, 9 (3E frame)

Command	Sub-command	Command name	Description	Max. number of points processed
0401	0001	Batch read in bit units	Reads bit devices in 1-point units.	64 points
0401	0000	Batch read in word units	Reads bit devices in 16-point units.*3	64 words (1024 points)
			Reads word devices in 1-point units.	64 points
1401	0001	Batch write in bit units	Writes to bit devices in 1-point units.	64 points
1401	0000	Batch write in word units	Writes to bit devices in 16-point units.*3	64 words (1024 points)
			Writes to word devices in 1-point units.	64 points
0403	0000	Random read in word units*1	Reads multiple different bit devices in 16-point and 32-point units.*3	64 words (1024 points)
			Reads multiple different word devices in 1-point and 2-point units.	64 points
1402	0001	Random write in bit units	Writes to multiple different bit devices in 1-point units.	64 points
1402	0000	Random write in word units*1	Writes to multiple different bit devices in 16-point and 32-point units.*3	64 words (1024 points)
			Writes to multiple different word devices in 1-point and 2-point units.	64 points
0406	0000	Multiple block batch read	Reads multiple blocks. A bit device (16 bits for 1 point) or a word device (1 word for 1 point) is regarded as one block.*3	64 points
1406	0000	Multiple block batch write	Writes multiple blocks. A bit device (16 bits for 1 point) or a word device (1 word for 1 point) is regarded as one block.*3	64 points
1901*2	0000	Read clock data	Reads the clock data of the GOT.	-
0901*2	0000	Set clock data	Sets the clock data of the GOT.	-

*1 Mixed specification of bit devices and word devices is also possible.
*2 This is a dedicated command of GOT for the microcomputer connection.
*3 Specifies the address of bit devices in 16-point units. (Example: M0, M16, M32, etc.)

62.4.3 Formats 1, 2 (GOT-A900 Series microcomputer connection)

■ Basic format of data communication

Item	Message Formats
Request message (host → GOT)	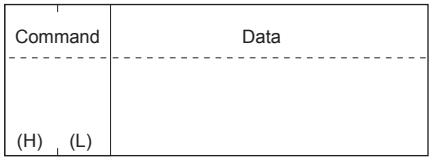
Response message during normal communication (GOT → host)	(1) During processing of read commands 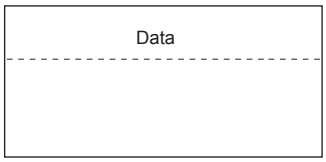 (2) During processing of write commands 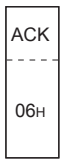
Response message during faulty communication (GOT → host)	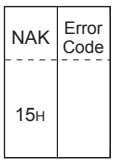
During interrupt output	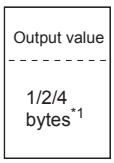

*1 Set the number of interrupt data bytes at "Communication Details Settings" on GT Designer3.
For the setting of the number of interrupt data bytes, refer to the following.

62.5.1 Setting communication interface (Communication settings)

■ Details of data items in message format

POINT

Data code during communication

Communication of format 1 is performed in ASCII code. (excluding interrupt output)
Communication of the format 2 is performed in Binary code.

(1) Control codes

Symbol	ASCII code	Description
EOT	04H	End of Transmission
ENQ	05H	Enquiry (start of enquiry)
NAK	15H	Negative ACK (error response)
ACK	06H	Acknowledge (write completion response)
LF	0AH	Line Feed
CL	0CH	Clear
CR	0DH	Carriage Return

(2) Command

Specifies the contents to access from the host to GOT.
The command is converted to a 2-digit ASCII code (Hex) and transmitted from the upper digit.
For details of the commands that can be used, refer to the following.

☞ 62.4.2 List of commands

(3) Address

Specifies the head No. of the device data to be read/written.
In the format 1, the address notated in decimal is converted to a 4-digit ASCII code (Hex) and transmitted from the upper digit.
In the format 2, the address notated in decimal is converted to a 2-digit Binary code (binary) and transmitted from the upper digit.
For details of the device range that can be accessed, refer to the following.

☞ 62.3 Device Data Area

(4) Number of points

Specifies the number of device data to be read/written. (Setting range: 1 to 64)
In the format 1, the address notated in decimal is converted to a 2-digit ASCII code (Hex) and transmitted from the upper digit.
In the format 2, the address notated in decimal is converted to a 1-digit Binary code (binary) and transmitted.

(5) Year, month, day, hour, minute, second and day of the week data

Specifies year, month, day, hour, minute, second, and day of the week to be read/set to the GOT clock data.
In the format 1, the address notated in decimal is converted to a 2-digit ASCII code (Hex) and transmitted from the upper digit.
In the format 2, the address notated in decimal is converted to a 1-digit Binary code (binary) and transmitted from the upper digit.

☞ ■ Message format(5)Read clock data (TR) command

☞ ■ Message format(6)Set clock data (TS) command

(6) Data

Specifies the data to read from/write to the specified device data. (word unit)
In the format 1, the address notated in hexadecimal is converted to a 4-digit ASCII code (Hex) and transmitted from the upper digit.
In the format 2, the address notated in hexadecimal is converted to a 2-digit Binary code (binary) and transmitted from the upper digit.

(7) Error code

This is the response message at faulty communication appended with error contents. Error code is transmitted in 1 byte.
For the error codes, refer to the following.

☞ ■ Error code list

■ Message Formats

(1) Batch read in word units (RD) command

(a) When reading a word device

The following shows an example of reading the two points of the virtual devices D100 and D101. (Assuming D100=0102H, D101=0304H are stored.)

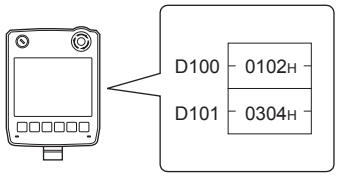

<table>
<tr><th>Item</th><th>Message Formats</th></tr>
<tr><td>Request message
(host → GOT)</td><td>(format 1: GOT-A900 Series microcomputer connection (ASCII))
<table>
<tr><th colspan="2">Command</th><th colspan="4">Address</th><th colspan="2">Number of points</th></tr>
<tr><td>R</td><td>D</td><td>0</td><td>1</td><td>0</td><td>0</td><td>0</td><td>2</td></tr>
<tr><td>52H</td><td>44H</td><td>30H</td><td>31H</td><td>30H</td><td>30H</td><td>30H</td><td>32H</td></tr>
<tr><td>(H)</td><td>(L)</td><td>(H)</td><td>—</td><td>—</td><td>(L)</td><td>(H)</td><td>(L)</td></tr>
</table>
(format 2: GOT-A900 Series microcomputer connection (Binary))
<table>
<tr><th colspan="2">Command</th><th colspan="2">Address</th><th>Number of points</th></tr>
<tr><td>R</td><td>D</td><td>00H</td><td>64H</td><td>02H</td></tr>
</table></td></tr>
<tr><td>Response message during normal communication
(GOT → host)</td><td>(format 1: GOT-A900 Series microcomputer connection (ASCII))
<table>
<tr><th colspan="4">Data 1 (D100)</th><th colspan="4">Data 2 (D101)</th></tr>
<tr><td>0</td><td>1</td><td>0</td><td>2</td><td>0</td><td>3</td><td>0</td><td>4</td></tr>
<tr><td>30H</td><td>31H</td><td>30H</td><td>32H</td><td>30H</td><td>33H</td><td>30H</td><td>34H</td></tr>
<tr><td>(H)</td><td>—</td><td>—</td><td>(L)</td><td>(H)</td><td>—</td><td>—</td><td>(L)</td></tr>
</table>
(format 2: GOT-A900 Series microcomputer connection (Binary))
<table>
<tr><th colspan="2">Data 1 (D100)</th><th colspan="2">Data 2 (D101)</th></tr>
<tr><td>01H</td><td>02H</td><td>03H</td><td>04H</td></tr>
</table></td></tr>
<tr><td>Response message during faulty communication
(GOT → host)</td><td>
<table>
<tr><th>NAK</th><th>Error code</th></tr>
<tr><td>15H</td><td>06H</td></tr>
</table>
The above is a case where the sum check error (06H) has occurred.</td></tr>
</table>

(b) When reading a bit device

The following shows an example of reading the two points of the virtual devices M0 to M31.
(Assuming M0="1" and M31="1" are stored.

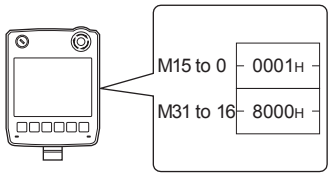

<table>
<tr><th>Item</th><th>Message Formats</th></tr>
<tr><td>Request message
(host → GOT)</td><td>(format 1: GOT-A900 Series microcomputer connection (ASCII))
 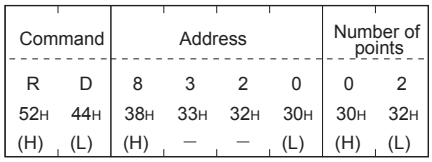
(format 2: GOT-A900 Series microcomputer connection (Binary))
 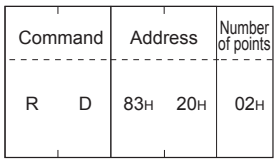 </td></tr>
<tr><td>Response message during normal communication
(GOT → host)</td><td>(format 1: GOT-A900 Series microcomputer connection (ASCII))
 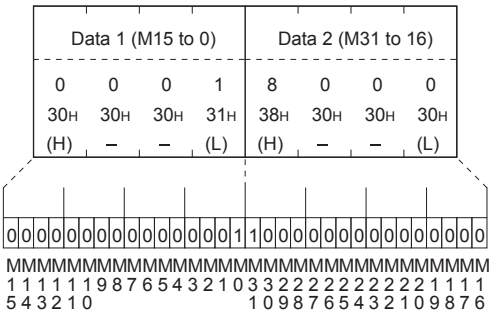
(format 2: GOT-A900 Series microcomputer connection (Binary))
 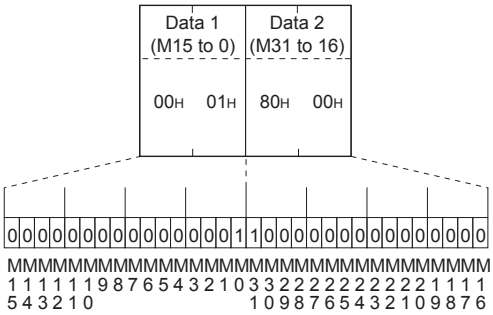 </td></tr>
<tr><td>Response message during faulty communication
(GOT → host)</td><td> 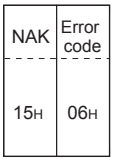
The above is a case where the sum check error (06H) has occurred.</td></tr>
</table>

(2) Batch write in word units (WD) command

(a) When writing to a word device

The following shows as example of writing "0064H" and "0065H" to virtual devices D100 and D101.

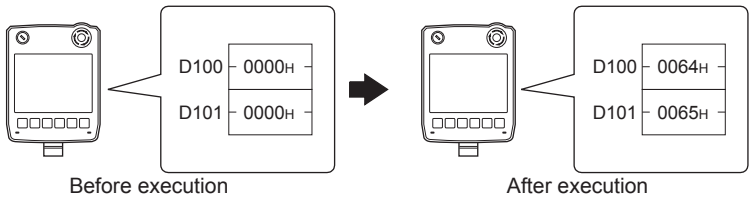

Item	Message Formats
Request message (host → GOT)	(format 1: GOT-A900 Series microcomputer connection (ASCII))

Command		Address				Number of points		Data 1 (D100)				Data 2 (D101)			
W	D	0	1	0	0	0	2	0	0	6	4	0	0	6	5
57H	44H	30H	31H	30H	30H	30H	32H	30H	30H	36H	34H	30H	30H	36H	35H
(H)	(L)	(H)	–	–	(L)	(H)	(L)	(H)	–	–	(L)	(H)	–	–	(L)

(format 2: GOT-A900 Series microcomputer connection (Binary))

Command		Address		Number of points	Data1 (D100)		Data 2 (D101)	
W	D	00H	64H	02H	00H	64H	00H	65H

Response message during normal communication (GOT → host)

ACK
06H

Response message during faulty communication (GOT → host)

NAK	Error code
15H	06H

The above is a case where the sum check error (06H) has occurred.

(b) When writing to a bit device

The following shows an example of writing "1"s to virtual devices M0 and M31.

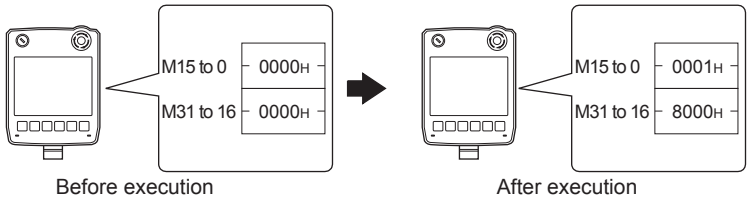

Item	Message Formats
Request message (host ⟶ GOT)	(format 1: GOT-A900 Series microcomputer connection (ASCII))

Command		Address				Number of points		Data 1 (M15 to 0)				Data 2 (M31 to 16)			
W	D	8	3	2	0	0	2	0	0	0	1	8	0	0	0
57H	44H	38H	33H	32H	30H	30H	32H	30H	30H	30H	31H	38H	30H	30H	30H
(H)	(L)	(H)	–	–	(L)	(H)	(L)	(H)	–	–	(L)	(H)	–	–	(L)

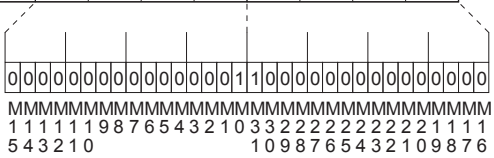

(format 2: GOT-A900 Series microcomputer connection (Binary))

Command		Address		Number of points	Data 1 (M15 to 0)		Data 2 (M31 to 16)	
W	D	20H	80H	02H	00H	01H	80H	00H

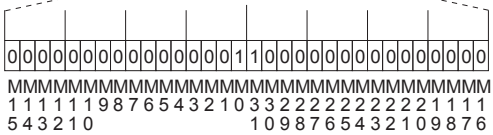

Response message during normal communication (GOT ⟶ host)	ACK: 06H

Response message during faulty communication (GOT ⟶ host)	NAK: 15H / Error code: 06H

The above is a case where the sum check error (06H) has occurred.

(3) Random read in word units (RR) command

The following shows an example of reading the two points of the virtual devices D100 and M0 to M15.
(Assuming D100=0064H, M0=1 are stored.)

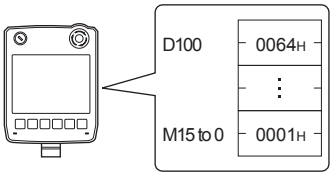

<table>
<tr><th>Item</th><th>Message Formats</th></tr>
<tr><td>Request message
(host → GOT)</td><td>(format 1: GOT-A900 Series microcomputer connection (ASCII))
 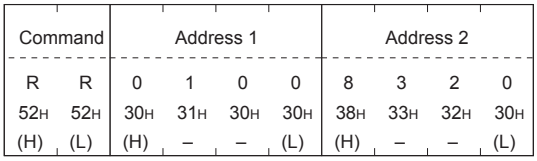
(format 2: GOT-A900 Series microcomputer connection (Binary))
 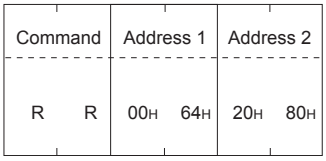 </td></tr>
<tr><td>Response message during normal communication
(GOT → host)</td><td>(format 1: GOT-A900 Series microcomputer connection (ASCII))
 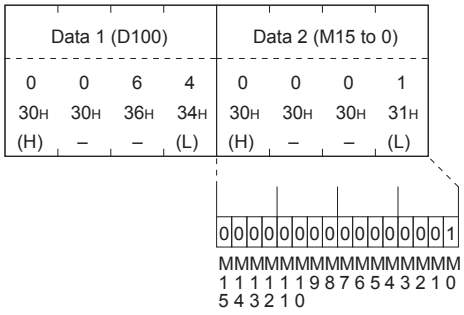
(format 2: GOT-A900 Series microcomputer connection (Binary))
 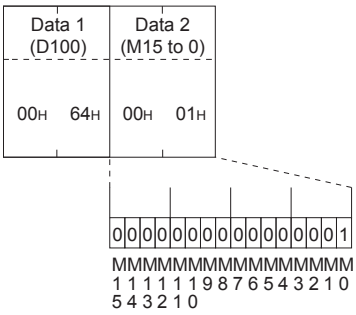 </td></tr>
<tr><td>Response message during faulty communication
(GOT → host)</td><td> 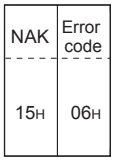
The above is a case where the sum check error (06H) has occurred.</td></tr>
</table>

(4) Random write in word units (RW) command

The following shows an example of writing "0064H" and "1" to virtual devices D100 and M0, respectively.

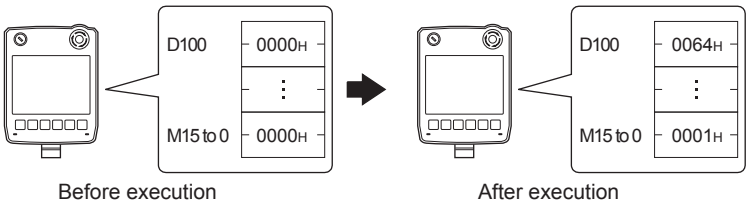

Item	Message Formats
Request message (host ⟶ GOT)	(format 1: GOT-A900 Series microcomputer connection (ASCII))

Command		Address 1				Data 1 (D100)				Address 2				Data 2 (M15 to 0)			
R	W	0	1	0	0	0	0	6	4	8	3	2	0	0	0	0	1
52H	57H	30H	31H	30H	30H	30H	30H	36H	34H	38H	33H	32H	30H	30H	30H	30H	31H
(H)	(L)	(H)	–	–	(L)	(H)	–	–	(L)	(H)	–	–	(L)	(H)	–	–	(L)

MM	M	M	M	M	M	M	M	M	M	M	M	M	M	M	M
15	14	13	12	11	10	9	8	7	6	5	4	3	2	1	0
0	0	0	0	0	0	0	0	0	0	0	0	0	0	0	1

(format 2: GOT-A900 Series microcomputer connection (Binary))

Command		Address 1		Data 1 (D100)		Address 2		Data 2 (M15 to 0)	
R	W	00H	64H	00H	00H	20H	80H	00H	01H

MM	M	M	M	M	M	M	M	M	M	M	M	M	M	M	M
15	14	13	12	11	10	9	8	7	6	5	4	3	2	1	0
0	0	0	0	0	0	0	0	0	0	0	0	0	0	0	1

Response message during normal communication (GOT ⟶ host)

ACK
06H

Response message during faulty communication (GOT ⟶ host)

NAK	Error code
15H	06H

The above is a case where the sum check error (06H) has occurred.

(5) Read clock data (TR) command

The following shows an example of reading the clock data of GOT.
(Assuming that the clock data of GOT has been set to "2009, October 1, 18:46:49, Thursday".)

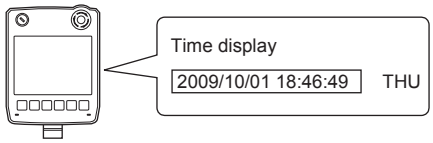

Request message (host → GOT)

Command	
T	R
54H	52H
(H)	(L)

Response message during normal communication (GOT → host)

(format 1: GOT-A900 Series microcomputer connection (ASCII))

Year data		Month data		Day data		Hour data		Minute data		Second data		Day-of-week data	
0	9	1	0	0	1	1	8	4	6	4	9	0	4
30H	39H	31H	30H	30H	31H	31H	38H	34H	36H	34H	39H	30H	34H
(H)	(L)	(H)	(L)	(H)	(L)	(H)	(L)	(H)	(L)	(H)	(L)	(H)	(L)

(format 2: GOT-A900 Series microcomputer connection (Binary))

Year data	Month data	Day data	Hour data	Minute data	Second data	Day-of-week data
09H	0AH	01H	12H	2EH	31H	04H

Response message during faulty communication (GOT → host)

NAK	Error code
15H	06H

The above is a case where the sum check error (06H) has occurred.

(6) Set clock data (TS) command

The following shows an example of setting the clock data of GOT.
(Assuming that the clock data of GOT has been set to "2009, October 1, 18:46:49, Thursday".)

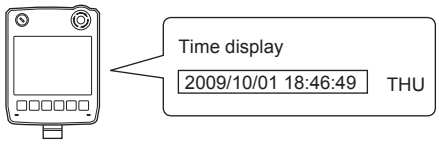

After execution

Item	Message Formats
Request message (host → GOT)	(format 1: GOT-A900 Series microcomputer connection (ASCII))

Command		Year data		Month data		Day data		Hour data		Minute data		Second data		Day-of-week data	
T	S	0	9	1	0	0	1	1	8	4	6	4	9	0	4
54H	53H	30H	39H	31H	30H	30H	31H	31H	38H	34H	36H	34H	39H	30H	34H
(H)	(L)	(H)	(L)	(H)	(L)	(H)	(L)	(H)	(L)	(H)	(L)	(H)	(L)	(H)	(L)

(format 2: GOT-A900 Series microcomputer connection (Binary))

Command		Year data	Month data	Day data	Hour data	Minute data	Second data	Day-of-week data
T	S	09H	0AH	01H	12H	2EH	31H	04H

Response message during normal communication (GOT → host)

ACK
06H

Response message during faulty communication (GOT → host)

NAK	Error code
15H	06H

The above is a case where the sum check error (06H) has occurred.

POINT

When a wrong day of the week has been set by the clock data setting command

If a wrong day of the week is set by the clock data setting commands, the clock data will differ from the time displayed on the utility.

Example: When October 01, 2009 (Tuesday) is set by the clock data setting command (the actual day of the week is Thursday)
Thursday (THU) will be displayed on the utility time display.

(7) In the case of interrupt outputs

The following shows an example of an interrupt output when data are written to the interrupt output devices (D13 and D14).

(Assuming that "3139H" is written to D13 and "AA55H" to D14.)

Example: When the number of interrupt data bytes is 2

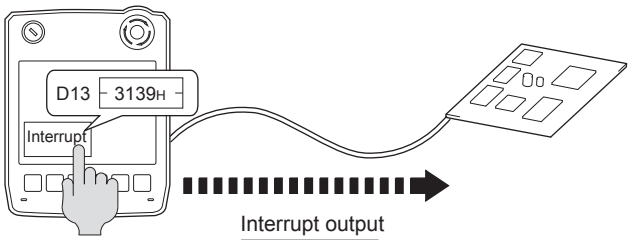

Interrupt output

Output value 1	Output value 2
31H	39H

Item	Message Formats
Interrupt output (GOT → host)	(1) When [Interrupt Data Byte] in "Communication Detail Settings" is set to "1 byte" Output value 1: 39H (2) When [Interrupt Data Byte] in "Communication Detail Settings" is set to "2 byte" Output value 1: 31H; Output value 2: 39H (3) When [Interrupt Data Byte] in "Communication Detail Settings" is set to "4 byte" Output value1: AAH; Output value2: 55H; Output value3: 31H; Output value4: 39H

POINT

Interrupt output

To disable the interrupt output, turn ON SM52 (interrupt code output disable flag). (62.3.6 SM devices)

■ Error code list

The error contents (error code) are appended to the response message during faulty communication.
The following shows error code, error contents, cause, and measures.

Error code	Description	Measures
10H	Command error An unsupported command was used.	• Review the contents of the message to transmit. • Check the commands in the message. (☞ 62.4.2 List of commands)
11H	Message length error The upper limit of the data length that can be received by the GOT has been exceeded.	• Review the contents of the message to transmit. • Check the data length of the message. (data length of the data section, etc.)
15H	Clock data setting error The setting value of the clock data has error.	• Review the contents of the message to transmit. • Check whether the non-existent data is set (e.g. setting "07" at the day of the week) as clock data.
7AH	Address error The start address of the read/write device is out of range.	• Review the contents of the message to transmit. • Check the devices that can be used and the device ranges. (☞ 62.3 Device Data Area)
7BH	Exceeded number of points error The read/write range exceeded the device range.	

■ Precautions

(1) Batch reading/writing crossing over different devices
When using the batch read (RD) or batch write (WD) command, do not batch read/write crossing over the different devices.
This will cause an error response.

(2) Storage order for 32-bit data
To use the program of GOT-A900 series with [32bit Order] setting to GOT1000 series, set [HL Order] to [32bit Order] for [Communication Detail Settings] when 32-bit data is set for GOT-A900 series.
With setting [LH Order], the order of upper bits and lower bits are reversed when the GOT displays and writes 32-bit data.

62.4.4 Formats 3, 4 (GOT-F900 series microcomputer connection)

■ Basic format of data communication

Item	Message Formats
Request message (host → GOT)	(1) w/out station No. 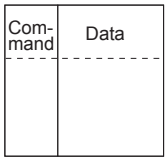 (2) w/station No. 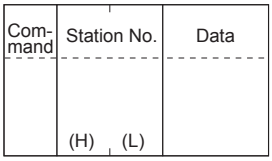
Response message during normal communication (GOT → host)	(1) During processing of read commands 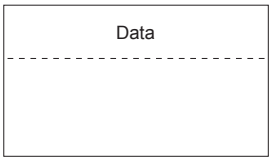
	(2) During processing of write commands 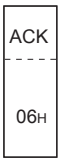
Response message during faulty communication (GOT → host)	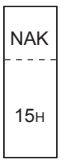
During interrupt output	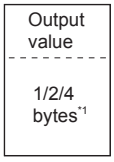

*1 Set the number of interrupt data bytes at "Communication Details Settings" on GT Designer3.
For the setting of the number of interrupt data bytes, refer to the following.

62.5.1 Setting communication interface (Communication settings)

■ Details of data items in message format

POINT

Data code during communication

Communication of format 3 is performed in ASCII code. (excluding interrupt output)
Communication of the format 4 is performed in Binary code.

(1) Control codes

Symbol	ASCII code	Description
EOT	04H	End of Transmission
ENQ	05H	Enquiry (start of enquiry)
NAK	15H	Negative ACK (error response)
ACK	06H	Acknowledge (write completion response)
LF	0AH	Line Feed
CL	0CH	Clear
CR	0DH	Carriage Return

(2) Command

Specifies the contents to access from the host to GOT.
The command is converted to a 1-digit ASCII code (Hex) and transmitted.
For details of the commands that can be used, refer to the following.

☞ 62.4.2 List of commands

(3) Station No.

Station No. is used to identify the GOT with which the host communicates. (Setting range: 0 to 31)
In the format 3, the address notated in decimal is converted to a 2-digit ASCII code (Hex) and transmitted from the upper digit.
In the format 4, the address notated in decimal is converted to a 1-digit Binary code (binary) and transmitted.
The GOT processes only commands whose station No. matches the "Host Address (0 to 31)" set at "Communication Detail Settings". (The message of command whose station No. does not match is ignored.)
For setting method of "Communication Detail Settings", refer to the following.

☞ 62.5.1 Setting communication interface (Communication settings)

(4) Address

Specifies the head No. of the device data to be read/written.
In the format 3, the address notated in hexadecimal is converted to a 4-digit ASCII code (Hex) and transmitted from the upper digit.
In the format 4, the address notated in hexadecimal is converted to a 2-digit Binary code (binary) and transmitted from the upper digit.
For details of the device range that can be accessed, refer to the following.

☞ 62.3 Device Data Area

(5) Bit pattern

Specifies the pattern of the bits to change.
In the format 3, the address notated in hexadecimal is converted to a 2-digit ASCII code (Hex) and transmitted from the upper digit.
In the format 4, the address notated in hexadecimal is converted to a 1-digit Binary code (binary) and transmitted.

☞ ■ Message format(3) Multi-point write in bit units (3) command (w/out station No.), multi-point write in bit units (D) command (w/ station No.)

(6) Write specification

Specifies how to change the data of the specified address by bit pattern.
(Setting range: 0 to 3)
Data notated in decimal is converted to a 1-digit ASCII code (Hex) and transmitted.

☞ ■ Message format(3) Multi-point write in bit units (3) command (w/out station No.), multi-point write in bit units (D) command (w/ station No.)

(7) Number of bytes

Specifies the number of bytes of the device data to be batch read/written. (Setting range: 0 to FFH)
In the format 3, the address notated in hexadecimal is converted to a 2-digit ASCII code (Hex) and transmitted from the upper digit.
In the format 4, the address notated in hexadecimal is converted to a 1-digit Binary code (binary) and transmitted.

(8) Number of points

Specifies the number of device data to be written to multiple points in bit units. (Setting range: 0 to 70)
In the format 3, the address notated in decimal is converted to a 2-digit ASCII code (Hex) and transmitted from the upper digit.
In the format 4, the address notated in decimal is converted to a 1-digit Binary code (binary) and transmitted.

(9) Year, month, day, hour, minute, second and day of the week data

Specifies year, month, day, hour, minute, second, and day of the week to be read/set to the GOT clock data.
In the format 3, the address notated in decimal is converted to a 2-digit ASCII code (Hex) and transmitted from the upper digit.
In the format 4, the address notated in decimal is converted to a 1-digit Binary code (binary) and transmitted.

☞ ■ (5) Read clock data (6) command (w/out station No.), read clock data (G) command (w/station No.)

☞ ■ (6) Set clock data (5) command (w/out station No.), set clock data (F) command (w/station No.)

(10) Data

Specifies the data to read from/write to the specified device data. (word unit)
In the format 3, the address notated in hexadecimal is converted to a 4-digit ASCII code (Hex) and transmitted from the upper digit.
In the format 4, the address notated in hexadecimal is converted to a 2-digit Binary code (binary) and transmitted from the upper digit.

(11) Write data

Specifies the data to write to the specified device data.
The address notated in hexadecimal is converted to a 2-digit ASCII code (Hex) and transmitted from the upper digit.

■ Message Formats

(1) Batch read (0) command (w/out station No.), batch read (A) command (w/station No.)

(a) When reading a word device

The following shows an example of reading four bytes of virtual devices R100 to R101 from the GOT at station No.15.

(Assuming R100=3D21H, R101=3604H are stored.)

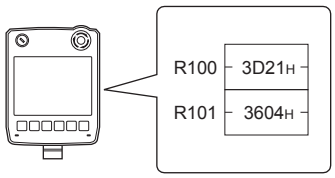

Item	Message Formats
Request message (host → GOT)	(format 3: GOT-F900 Series microcomputer connection (ASCII)) Com-mand: A (41H) Station No.: 1 (31H) (H), 5 (35H) (L) Address: 0 (30H) (H), 0 (30H) –, C (43H) –, 8 (38H) (L) Number of bytes: 0 (30H) (H), 4 (34H) (L) (format 4: GOT-F900 Series microcomputer connection (Binary)) Com-mand: A Station No.: 0FH Address: 00H, C8H Number of bytes: 04H
Response message during normal communication (GOT → host)	(format 3: GOT-F900 Series microcomputer connection (ASCII)) Data 1 (R100 upper): 3 (33H) (H), D (44H) (L) Data 2 (R100 lower): 2 (32H) (H), 1 (31H) (L) Data 3 (R101 upper): 3 (33H) (H), 6 (36H) (L) Data 4 (R101 lower): 0 (30H) (H), 4 (34H) (L) (format 4: GOT-F900 Series microcomputer connection (Binary)) Data 1 (R100 upper): 3DH Data 2 (R100 lower): 21H Data 3 (R101 upper): 36H Data 4 (R101 lower): 04H
Response message during faulty communication (GOT → host)	NAK 15H

(b) When reading a bit device

The following shows an example of reading four bytes of the virtual devices M0 to M31.
(Assuming M0="1" and M31="1" are stored.

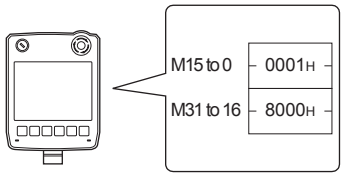

<table>
<tr><th>Item</th><th>Message Formats</th></tr>
<tr><td>Request message
(host → GOT)</td><td>(format 3: GOT-F900 Series microcomputer connection (ASCII))
<table><tr><th>Com-mand</th><th colspan="2">Station No.</th><th colspan="4">Address</th><th colspan="2">Number of bytes</th></tr><tr><td>A</td><td>1</td><td>5</td><td>2</td><td>0</td><td>0</td><td>0</td><td>0</td><td>4</td></tr><tr><td>41H</td><td>31H
(H)</td><td>35H
(L)</td><td>32H
(H)</td><td>30H
–</td><td>30H
–</td><td>30H
(L)</td><td>30H
(H)</td><td>34H
(L)</td></tr></table>
(format 4: GOT-F900 Series microcomputer connection (Binary))
<table><tr><th>Com-mand</th><th>Station No.</th><th colspan="2">Address</th><th>Number of bytes</th></tr><tr><td>A</td><td>0FH</td><td>20H</td><td>00H</td><td>04H</td></tr></table></td></tr>
<tr><td>Response message during normal communication
(GOT → host)</td><td>(format 3: GOT-F900 Series microcomputer connection (ASCII))
<table><tr><th colspan="2">Data 1
(M7 to 0)</th><th colspan="2">Data 2
(M15 to 8)</th><th colspan="2">Data 3
(M23 to 16)</th><th colspan="2">Data 4
(M31 to 24)</th></tr><tr><td>0</td><td>1</td><td>0</td><td>0</td><td>0</td><td>0</td><td>8</td><td>0</td></tr><tr><td>30H
(H)</td><td>31H
(L)</td><td>30H
(H)</td><td>30H
(L)</td><td>30H
(H)</td><td>30H
(L)</td><td>38H
(H)</td><td>30H
(L)</td></tr></table>
 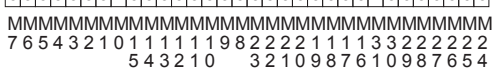
 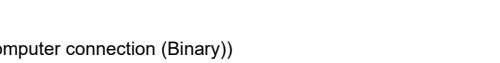
(format 4: GOT-F900 Series microcomputer connection (Binary))
<table><tr><th>Data 1
(M7 to 0)</th><th>Data 2
(M15 to 8)</th><th>Data 3
(M23 to 16)</th><th>Data 4
(M31 to 24)</th></tr><tr><td>01H</td><td>00H</td><td>00H</td><td>80H</td></tr></table>
 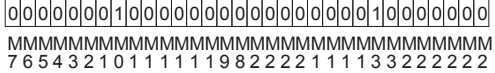
 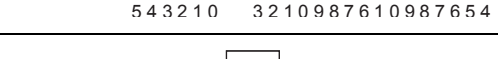 </td></tr>
<tr><td>Response message during faulty communication
(GOT → host)</td><td><table><tr><th>NAK</th></tr><tr><td>15H</td></tr></table></td></tr>
</table>

(2) Batch write (1) command (w/out station No.), batch write (B) command (w/station No.)

(a) When writing to a word device

The following shows an example of writing "3D21H" and "3604H" to virtual devices R100 and R101 on the GOT at station No.15.

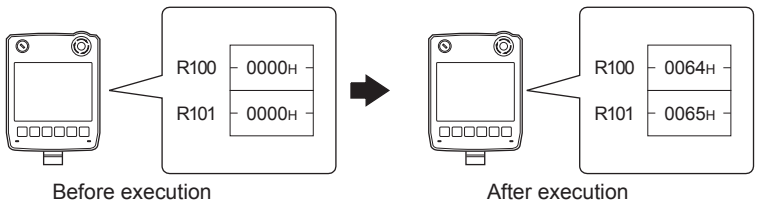

Before execution　　After execution

Item	Message Formats
Request message (host → GOT)	(format 3: GOT-F900 Series microcomputer connection (ASCII))

Com-mand	Station No.		Address				Number of bytes		Following*1
B	1	5	0	0	C	8	0	4	
42H	31H (H)	35H (L)	30H (H)	30H –	43H –	38H (L)	30H (H)	34H (L)	

*1

Data 1 (R100 upper)		Data 2 (R100 lower)		Data 3 (R101 upper)		Data 4 (R101 lower)	
3	D	2	1	3	6	0	4
33H (H)	44H (L)	32H (H)	31H (L)	33H (H)	36H (L)	30H (H)	34H (L)

(format 4: GOT-F900 Series microcomputer connection (Binary))

Com-mand	Station No.	Address		Number of bytes	Following*2
B	0FH	00H	C8H	04H	

*2

Data 1 (R100 upper)	Data 2 (R100 lower)	Data 3 (R101 upper)	Data 4 (R101 lower)
3DH	21H	36H	04H

Response message during normal communication (GOT → host)
ACK
06H

Response message during faulty communication (GOT → host)
NAK
15H

(b) When writing to a bit device

The following shows an example of writing "1"s to virtual devices M0 and M31 on the GOT at station No.15.

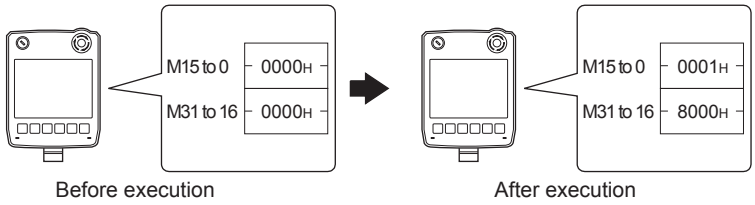

Item	Message Formats
Request message (host → GOT)	(format 3: GOT-F900 Series microcomputer connection (ASCII))

Com-mand	Station No.		Address				Number of bytes		Following*1
B	1	5	2	0	0	0	0	4	
42H	31H	35H	32H	30H	30H	30H	30H	34H	
	(H)	(L)	(H)	–	–	(L)	(H)	(L)	

*1

Data 1 (M7 to 0)		Data 2 (M15 to 8)		Data 3 (M23 to 16)		Data 4 (M31 to 24)	
0	1	0	0	0	0	8	0
30H	31H	30H	30H	30H	30H	38H	30H
(H)	(L)	(H)	(L)	(H)	(L)	(H)	(L)

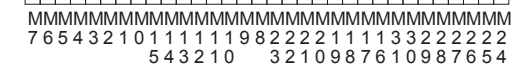

(format 4: GOT-F900 Series microcomputer connection (Binary))

Com-mand	Station No.	Address		Number of bytes	Following*2
B	0FH	20H	00H	04H	

*2

Data 1 (M7 to 0)	Data 2 (M15 to 8)	Data 3 (M23 to 16)	Data 4 (M31 to 24)
01H	00H	00H	80H

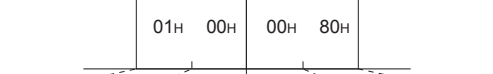

Response message during normal communication (GOT → host)	ACK 06H
Response message during faulty communication (GOT → host)	NAK 15H

(3) Multi-point write in bit units (3) command (w/out station No.), multi-point write in bit units (D) command (w/ station No.)

The following shows an example of turning OFF the virtual device M31 and turning ON the virtual device M2038 on the GOT at station No.31.

Item	Message Formats
Request message (host ⟶ GOT)	(format 3: GOT-F900 Series microcomputer connection (ASCII))

Com-mand	Station No.		Number of points		Following*1
D	3	1	0	2	
44H	33H (H)	31H (L)	30H (H)	32H (L)	

*1

Write specification 1	Address1				Bit pattern1		Write specification 2	Address2				Bit pattern2	
1	2	0	0	3	8	0	0	2	0	F	E	4	0
31H	32H (H)	30H –	30H –	33H (L)	38H (H)	30H (L)	30H	32H (H)	30H –	46 –	45H (L)	34H (H)	30H (L)

*2 (write specification1=1)

Source data bit pattern	1	0	1	0	1	0	1	0
	1	0	0	0	0	0	0	0
Result	0	0	1	0	1	0	1	0

MMMMMMMM
33222222
10987654

*2 (write specification2=0)

Source data bit pattern	1	0	1	0	1	0	1	0
	0	1	0	0	0	0	0	0
Result	1	1	1	0	1	0	1	0

MMMMMMMM
22222222
00000000
33333333
98765432

(format 4: GOT-F900 Series microcomputer connection (Binary))

Com-mand	Station No.	Number of points	Following*3
D	1FH	02H	

*3

Write specification 1	Address1		Bit pattern1	Write specification 2	Address2		Bit pattern2
1	20H	03H	80H	0	20H	FEH	40H

*2 (write specification1=1)

Source data bit pattern	1	0	1	0	1	0	1	0
	1	0	0	0	0	0	0	0
Result	0	0	1	0	1	0	1	0

MMMMMMMM
33222222
10987654

*2 (write specification2=0)

Source data bit pattern	1	0	1	0	1	0	1	0
	0	1	0	0	0	0	0	0
Result	1	1	1	0	1	0	1	0

MMMMMMMM
22222222
00000000
33333333
98765432

Response message during normal communication (GOT ⟶ host)	ACK 06H
Response message during faulty communication (GOT ⟶ host)	NAK 15H

*2 The write specification specifies how the data of the specified address is changed in the bit pattern.

Write specification	Function	Description	Action example
0	ON specification	Bits set to "1" by the bit pattern are turned ON.	Original data 1010 Bit pattern 1100 Result 1110
1	OFF specification	Bits set to "1" by the bit pattern are turned OFF.	Original data 1010 Bit pattern 1100 Result 0010
2	Invert specification	Bits set to "1" by the bit pattern are inverted.	Original data 1010 Bit pattern 1100 Result 0110
3	Write specification	The numerical values to write by the bit pattern are specified directly.	Original data 1010 Bit pattern 1100 Result 1100

(4) Fill command (4) (w/out station No.), fill command (E) (w/station No.)
The following shows an example of writing "16"s to virtual devices R50 to R100 on the GOT at station No.27.

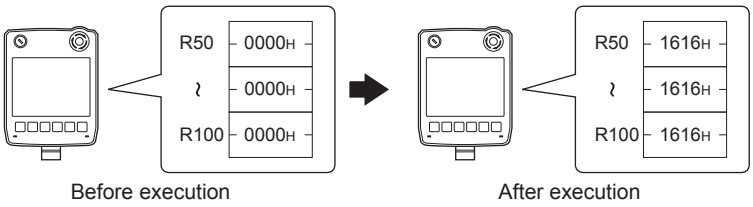

Item	Message Formats
Request message (host ⟶ GOT)	(format 3: GOT-F900 Series microcomputer connection (ASCII))

Com-mand	Station No.		Start address				End address				Write Data	
E	2	7	0	0	6	4	0	0	C	9	1	6
45H	32H (H)	37H (L)	30H (H)	30H –	36H –	34H (L)	30H (H)	30H –	43H –	39H (L)	31H (H)	36H (L)

(format 4: GOT-F900 Series microcomputer connection (Binary))

Com-mand	Station No.	Start address		End address		Write Data
E	1BH	00H	64H	00H	C9H	16H

Response message during normal communication (GOT ⟶ host)	ACK 06H
Response message during faulty communication (GOT ⟶ host)	NAK 15H

POINT

(1) Start address/end address specification conditions
Specify addresses so that the start address is the same or less than the end address.
Error response occurs in the following cases:
- The address to specify has the start address greater than the end address.
- Either of the start address or end address exceeds the device range that can be specified.

(2) Address specifying crossing over different devices
The start address and end address can be specified crossing over different devices.

(5) Read clock data (6) command (w/out station No.), read clock data (G) command (w/station No.)
The following shows an example of reading the clock data of GOT at station No.27.
(Assuming that the clock data of GOT has been set to "10, October 1, 18:46:49, Thursday".)

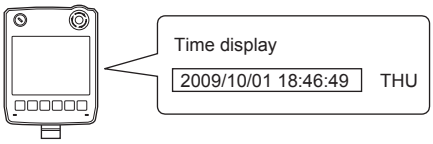

Item	Message Formats
Request message (host → GOT)	(format 3: GOT-F900 Series microcomputer connection (ASCII)) Command: G (47H); Station No.: 27 (32H (H), 37H (L)) (format 4: GOT-F900 Series microcomputer connection (Binary)) Command: G (1BH); Station No.
Response message during normal communication (GOT → host)	(format 3: GOT-F900 Series microcomputer connection (ASCII)) Year data: 09 (30H 39H (H), (L)); Month data: 10 (31H 30H (H), (L)); Day data: 01 (30H 31H (H), (L)); Hour data: 18 (31H 38H (H), (L)); Minute data: 46 (34H 36H (H), (L)); Second data: 49 (34H 39H (H), (L)); Day-of-week data: 04 (30H 34H (H), (L)) (format 4: GOT-F900 Series microcomputer connection (Binary)) Year data: 09H; Month data: 0AH; Day data: 01H; Hour data: 12H; Minute data: 2EH; Second data: 31H; Day-of-week data: 04H
Response message during faulty communication (GOT → host)	NAK (15H)

(6) Set clock data (5) command (w/out station No.), set clock data (F) command (w/station No.)
The following shows an example of setting clock data of GOT at station No.27.
(Assuming that the clock data of GOT has been set to "10, October 1, 18:46:49, Thursday".)

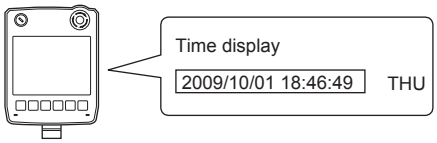

After execution

Item	Message Formats
Request message (host → GOT)	(format 3: GOT-F900 Series microcomputer connection (ASCII))

Com-mand	Station No.		Year data		Month data		Day Data		Hour data		Minute data		Second data		Day-of-week data	
F	2	7	0	9	1	0	0	1	1	8	4	6	4	9	0	4
46H	32H (H)	37H (L)	30H (H)	39H (L)	31H (H)	30H (L)	30H (H)	31H (L)	31H (H)	38H (L)	34H (H)	36H (L)	34H (H)	39H (L)	30H (H)	34H (L)

(format 4: GOT-F900 Series microcomputer connection (Binary))

Com-mand	Station No.	Year data	Month data	Day data	Hour data	Minute data	Second data	Day-of-week data
F	1BH	09H	0AH	01H	12H	2EH	31H	04H

Response message during normal communication (GOT → host)
ACK
06H

Response message during faulty communication (GOT → host)
NAK
15H

POINT

When a wrong day of the week has been set by the clock data setting command

If a wrong day of the week is set by the clock data setting commands, the clock data will differ from the time displayed on the utility.

Example: When October 01, 2009 (Tuesday) is set by the clock data setting command (the actual day of the week is Thursday)
Thursday (THU) will be displayed on the utility time display.

(7) In the case of interrupt outputs

The following shows an example of an interrupt output when data are written to the interrupt output devices (D13 and D14).

(Assuming that "3139H" is written to D13 and "AA55H" to D14.)

Example: When the number of interrupt data bytes is 2

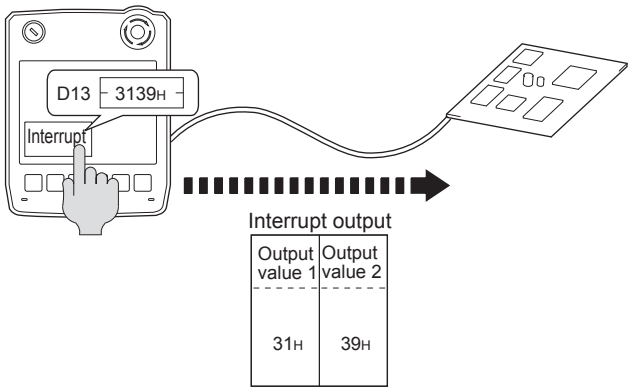

Item	Message Formats
Interrupt output (GOT → host)	(1) When [Interrupt Data Byte] in "Communication Detail Settings" is set to "1 byte" Output value 1: 39H (2) When [Interrupt Data Byte] in "Communication Detail Settings" is set to "2 byte" Output value 1: 31H, Output value 2: 39H (3) When [Interrupt Data Byte] in "Communication Detail Settings" is set to "4 byte" Output value 1: AAH, Output value 2: 55H, Output value 3: 31H, Output value 4: 39H

POINT

Interrupt output

- To disable the interrupt output, turn ON SM52 (interrupt code output disable flag). (62.3.6 SM devices)
- To issue interrupts, set the data length to "8 bits" at "Communication Detail Settings".
  (62.5.1 Setting communication interface (Communication settings))
- When "7 bits" is set, the MSB (8th bit) is ignored. (Example: FFH → 7FH)

■ Error code list

When faulty, the error code is stored in SD2.
For details of error code stored in SD2, the error contents, cause and measures, refer to the following:

☞ 62.3.5 ■ Details and actions for errors (error codes) stored into SD2

When an error other than those to be stored in SD2 occurs, at faulty, only the NAK response is executed.

■ Precautions

(1) Batch reading/writing crossing over different devices
When using the batch read (0, A) or batch write (1, B) command, do not batch read/write crossing over different devices.
This will cause an error response.

62.4.5 Format 5 (Digital Electronics Corporation's memory link method)

■ Basic format of data communication

This is the same format as the protocol of the Digital Electronics Corporation's memory link method.
For details of the basic format of data communication, refer to the following manual:

☞ The connection manual of the device manufactured by Digital Electronics Corporation

This section describes items whose settings differ from the protocols of the Digital Electronics Corporation's memory link method and dedicated commands for a microcomputer connection of GOT.

Example: Request message for the batch read in word units (R) command in format 5 (Digital Electronics Corporation's memory link method

				Data length				ESC	Com-mand	Address		Number of points	
B									R				
42H	00H	00H	00H	00H	00H	00H	06H	1BH	52H	00H	64H	00H	02H

■ Details of data items in message format

POINT

Data code during communication

Communication is performed in ASCII code.

(1) Command

Specifies the contents to access from the host to GOT.
The command is converted to a 1-digit ASCII code (Hex) and transmitted.
For details of the commands that can be used, refer to the following.

☞ 62.4.2 List of commands

(2) Address

Specifies the head No. of the device data to be read/written.
The address notated in hexadecimal is converted to a 4-digit ASCII code (Hex) and transmitted from the upper digit.
For details of the device range that can be accessed, refer to the following.

☞ 62.3 Device Data Area

(3) Number of points

Specifies the number of device data to be read/written. (Setting range: 1 to 40H)
The address notated in hexadecimal is converted to a 4-digit ASCII code (Hex) and transmitted from the upper digit.

(4) Error code

This is the response message at faulty communication appended with error contents.
The address notated in hexadecimal is converted to a 2-digit ASCII code (Hex) and transmitted from the upper digit.
For details of error codes generated in format 5 (Digital Electronics Corporation's memory link method), refer to the following:

☞ ■ Error code list

POINT

When connecting a microcomputer, etc. that uses the protocol of the Digital Electronics Corporation's memory link method with the GOT

When connecting a microcomputer, etc. that uses the protocol of the Digital Electronics Corporation's memory link method with the GOT, correct the commands to be used and the device ranges to match the specifications of the GOT.

■ Message Formats

The following shows the message format of the dedicated commands for a microcomputer connection of GOT.

(1) Batch read in word units (R) command

The following shows an example of reading the two points of the virtual devices D100 and D101.
(Assuming D100=0102H, D101=0304H are stored.)

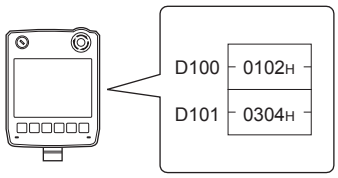

Item	Message Formats
Request message (host → GOT)	B: 42H 00H 00H 00H; Data length: 00H 00H 00H 06H; ESC: 1BH; Command: R 52H; Address: 00H 64H; Number of points: 00H 02H
Response message during normal communication (GOT → host)	b: 42H 00H 00H 00H; Data length: 00H 00H 00H 06H; ESC: 1BH; Command: A 41H; Address: 01H 02H; Number of points: 03H 04H

(2) Batch write in word units (WD) command

(a) When writing to a word device

The following shows as example of writing "0064H" and "0065H" to virtual devices D100 and D101.

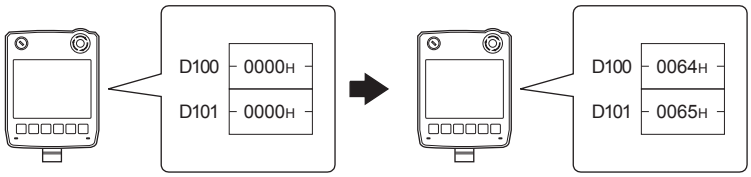

Before execution　　After execution

Item	Message Formats
Request message (host → GOT)	B: 42H 00H 00H 00H; Data length: 00H 00H 00H 0AH; ESC: 1BH; Command: W 57H; Address: 00H 64H; Number of points: 00H 02H; Data 1: 00H 64H; Data 2: 00H 65H
Response message during normal communication (GOT → host)	b: 42H 00H 00H 00H; Data length: 00H 00H 00H 06H; ACK: 06H

(3) In the case of interrupt outputs

The following shows an example of an interrupt output when data are written to the interrupt output devices (D13). (Assuming that "31H" is written to D13.)

Example: When the number of interrupt data bytes is 1

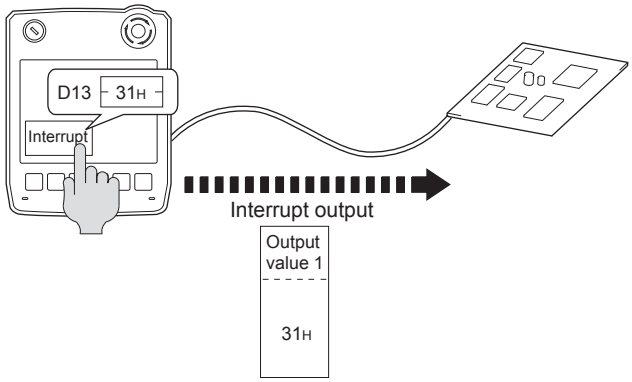

Item	Message Formats
Interrupt output (GOT → host)	When [Interrupt Data Byte] in "Communication Detail Settings" is set to "1 byte" Output value 1 31H

POINT

Interrupt output

- To disable the interrupt output, turn ON SM52 (interrupt code output disable flag). (☞ 62.3.6 SM devices)
- To issue interrupts in format 11, set the data length to "8 bits" at "Communication Detail Settings". (☞ 62.5.1 Setting communication interface (Communication settings))
- When "7 bits" is set, the MSB (8th bit) is ignored. (Example: FFH → 7FH)

■ Error code list

In the case of format 5 (Digital Electronics Corporation's memory link method), the details (error code) of the error are appended to the response message during faulty communication.
The following shows error code, error contents, cause, and measures.

Error code	Description	Measures
10H	Command error An unsupported command was used.	• Review the contents of the message to transmit. • Check the commands in the message. (☞ 62.4.2 List of commands)
12H	Message length error The upper limit of the data length that can be received by the GOT has been exceeded.	
FAH	Address error The start address of the read/write device is out of range.	• Review the contents of the message to transmit. • Check whether the non-existent data is set (e.g. setting "07" at the day of the week) as clock data.
FBH	Exceeded number of points error The read/write range exceeded the device range.	• Review the contents of the message to transmit. • Check the devices that can be used and the device ranges. (☞ 62.3 Device Data Area)
FCH	Message format error The format of the received message has error.	• Check the settings of "Communication Detail Settings". • Review the contents of the message to transmit.
FFH	Timeout error There is no response from the GOT, or the station of the specified address does not exist.	• Check the communication cable and communication module attachment. • Check the settings of "Communication Detail Settings". • Review the contents of the message to transmit.

■ Precautions

(1) Batch reading/writing crossing over different devices
When using the batch read (R) or batch write (W) command, do not batch read/write crossing over the different devices.
This will cause an error response.

(2) Storage order for 32-bit data
To use the program of Digital Electronics Corporation's memory link method with [32bit Order] setting to GOT1000 series, set [HL Order] to [32bit Order] for [Communication Detail Settings] when 32-bit data is set for GOT-A900 series.
With setting [LH Order], the order of upper bits and lower bits are reversed when the GOT displays and writes 32-bit data.

62.4.6 Formats 6, 7 (4E frame)

■ Basic format of data communication

This is the same message format as when communication is performed using the MC protocol (4E frame) of the Q/QnA Series serial communication module.
For details of the basic format of data communication, refer to the following manual:

☞ MELSEC-Q/L MELSEC Communication Protocol Reference Manual

This section describes items whose settings differ from the MC protocol of the Q/QnA Series serial communication module, and the dedicated commands for a GOT microcomputer connection.

Example: Request message for the batch read in word units (0401) command
Device name: D, Start device: 100, Number of device points: 2
Communication settings of the GOT side: Network No.=1, PLC No.=1

• Format 6 (4E frame (ASCII))

Request type				Serial No.				Fixed value				Network No.		PLC No.		Request destination module I/O No.				Request destination module station No.		Following *1
5	4	0	0	0	0	0	0	0	0	0	0	0	1	0	1	0	0	0	0	0	0	
35H	34H	30H	30H	30H	30H	30H	30H	30H	30H	30H	30H	30H	31H	30H	31H	30H	30H	30H	30H	30H	30H	
(H)	(L)	(H)	(L)	(H)	(L)	(H)	(L)	(H)	(L)	(H)	–	(H)	(L)	(H)	(L)	(H)	–	–	(L)	(H)	(L)	

*1

Request data length				CPU monitoring timer				Command			
0	0	1	8	0	0	0	0	0	4	0	1
30H	30H	31H	38H	30H	30H	30H	30H	30H	34H	30H	31H
(H)	(L)	(H)	(L)	(H)	(L)	(H)	(L)	(H)	–	–	(L)

→ 1)

Request data length range

Character A section

1) →

Sub-command				Device code		Start Device						Number of device points			
0	0	0	0	D	*	0	0	0	1	0	0	0	0	0	2
30H	30H	30H	30H	44H	2AH	30H	30H	30H	31H	30H	30H	30H	30H	30H	32H
(H)	–	–	(L)	(H)	(L)	(H)	–	–	–	–	(L)	(H)	–	–	(L)

Request data length range

• Format 7 (4E frame (Binary))

Request type	Serial No.	Fixed value	Network No.	PLC No.	Request destination module I/O No.	Request destination module station No.	Request data length	CPU monitoring timer	Command	Sub-command	Start Device	Device code	Number of device points
54H 00H	00H 00H	00H 00H	01H	01H	00H 00H	00H	0CH 00H	00H 00H	01H 04H	00H 00H	64H 00H 00H	A8H	02H 00H

Request data length range

■ Details of data items in message format

POINT

Data code during communication

Communication of format 6 is performed in ASCII code.

Communication of the format 7 is performed in Binary code.

The following table shows the contents of the data items.

Data item name	Description	
	Format 6	Format 7
Request type (Microcomputer side)	Indicates it is a command message.	
	Command message: ASCII "5400"(Fixed value)	Command message: 54H (Upper digit) (Fixed value)
Response type (GOT side)	Indicates it is a response message.	
	Response message: ASCII "D400" (Fixed value)	Response message: D4H (Upper digit) (Fixed value)
Serial No.	Arbitrary number for recognition of the message appended at the microcomputer side. GOT sends the response message appending this Serial No.	
Fixed value	Should be ASCII "0000".	Should be "0000H".
Network No.	Set the same number as the network No. set in the GOT. For setting method of "Communication Detail Settings", refer to the following. ☞ 62.5.1 Setting communication interface (Communication settings)	
	Transmit the data notated in hexadecimal converted to a 2-digit ASCII code, from the upper digit.	Transmit the data notated in hexadecimal converted to a 1-digit binary code, from the upper digit.
PLC No.	Set the same number as the PLC No. set in the GOT. For setting method of "Communication Detail Settings", refer to the following. ☞ 62.5.1 Setting communication interface (Communication settings)	
	Transmit the data notated in hexadecimal converted to a 2-digit ASCII code, from the upper digit.	Transmit the data notated in hexadecimal converted to a 1-digit binary code, from the upper digit.
Request destination module I/O No.	Ignore GOT.	
Request destination module No.	Ignore GOT.	
Request data length	Number of bytes from the start of CPU monitoring timer to the last request data.	
	Transmit the data notated in hexadecimal converted to a 4-digit ASCII code, from the upper digit.	Transmit the data notated in hexadecimal converted to a 2-digit binary code, from the lower digit.
Response data length	Appended to the response message from the microcomputer side. Number of bytes from the start of end code to the last request data.	
	Transmit the data notated in hexadecimal converted to a 4-digit ASCII code, from the upper digit.	Transmit the data notated in hexadecimal converted to a 2-digit binary code, from the lower digit.
CPU monitoring timer	Ignore GOT.	
Command, sub-command	Specifies the access contents from the microcomputer side to GOT. For details of the commands that can be used, refer to the following. ☞ 62.4.2 List of commands	
	Transmit the command and sub-command converted to a 4-digit ASCII code, from the upper digit.	Transmit the command and sub-command converted to a 2-digit binary code, from the lower digit.

<table>
<tr><th rowspan="2">Data item name</th><th colspan="2">Description</th></tr>
<tr><th>Format 6</th><th>Format 7</th></tr>
<tr><td rowspan="2">Device code</td><td colspan="2">Specifies the code by which the device data to be read/written is recognized.
For details of the device range that can be accessed, refer to the following.
62.3 Device Data Area</td></tr>
<tr><td>Transmit the 2-digit ASCII code corresponding to the following device codes.<table><tr><th>Device name</th><th>Device code</th></tr><tr><td>M</td><td>M*</td></tr><tr><td>SM</td><td>SM</td></tr><tr><td>L</td><td>L*</td></tr><tr><td>D</td><td>D*</td></tr><tr><td>SD</td><td>SD</td></tr><tr><td>R</td><td>R*</td></tr></table></td><td>Transmit the 1-digit binary code corresponding to the following device codes.<table><tr><th>Device name</th><th>Device code</th></tr><tr><td>M</td><td>90H</td></tr><tr><td>SM</td><td>91H</td></tr><tr><td>L</td><td>92H</td></tr><tr><td>D</td><td>A8H</td></tr><tr><td>SD</td><td>A9H</td></tr><tr><td>R</td><td>AFH</td></tr></table></td></tr>
<tr><td rowspan="2">Head device</td><td colspan="2">Specifies the head No. of the device data to be read/written.
For details of the device range that can be accessed, refer to the following.
62.3 Device Data Area</td></tr>
<tr><td>Transmit the data notated in decimal converted to a 6-digit ASCII code, from the upper digit.</td><td>Transmit the command and sub-command converted to a 3-digit binary code, from the lower digit.</td></tr>
<tr><td rowspan="2">Number of devices</td><td colspan="2">Specifies the number of device data to be read/written. (Setting range: 1 to 40H)
&inequalityRWhen using random read/write command&inequalityL
When setting multiple bit accesses, word accesses or double word accesses, limit the total number of access points to within 64 points
&inequalityRWhen using multiple block batch read/write commands&inequalityL
When setting multiple blocks, limit the total number of points of all blocks to within 64 points.</td></tr>
<tr><td>Transmit the data notated in decimal converted to a 4-digit ASCII code, from the upper digit.</td><td>Transmit the end code converted to a 2-digit binary code, from the lower digit.</td></tr>
<tr><td rowspan="2">Year, month, day, hour, minute, second and day of the week data</td><td colspan="2">Specifies year, month, day, hour, minute, second, and day of the week to be read/set to the GOT clock data.
■ Message Formats(1)Read clock data (1901) command
■ Message Formats(2)Set clock data (0901) command</td></tr>
<tr><td>Transmit the data notated in decimal converted to a 2-digit ASCII code, from the upper digit.</td><td>Transmit the data converted to a 2-digit binary code.</td></tr>
<tr><td rowspan="2">End code (Microcomputer side)</td><td colspan="2">Appended to the response message from the microcomputer side. If an error occurs at the microcomputer side, the error code is displayed.
■ Error code list</td></tr>
<tr><td>Transmit the data notated in hexadecimal converted to a 4-digit ASCII code, from the upper digit.</td><td>Transmit the end code converted to a 2-digit binary code, from the lower digit.</td></tr>
</table>

POINT

When connecting a microcomputer, etc. that uses the MC protocol of the Q/QnA series serial communication module with the GOT

When connecting a microcomputer, etc. that uses the MC protocol of the Q/QnA series serial communication module with the GOT, correct the commands to be used and the device ranges to match the GOT specifications.

■ Message Formats

The following shows the message format of the dedicated commands for a microcomputer connection of GOT.

(1) Read clock data (1901) command

The following shows an example of reading the clock data of GOT.
(Assuming that the clock data of GOT has been set to "2009, October 1, 18:46:49, Thursday".)

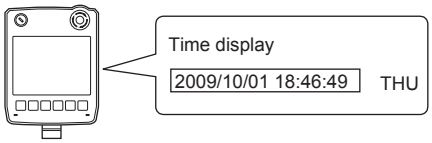

Item	Message Formats
Request message (host ⟶ GOT)	(format 6: 4E frame (ASCII))

Request type				Serial No.				Fixed value				Network No.		PLC No.		Following*1
5	4	0	0	0	0	0	0	0	0	0	0	0	1	0	1	
35H	34H	30H	30H	30H	30H	30H	30H	30H	30H	30H	30H	30H	31H	30H	31H	
(H)	–	–	(L)	(H)	–	–	(L)	(H)	–	–	(L)	(H)	(L)	(H)	(L)	

*1

Request destination module I/O No.				Request destination module station No.		Request data length				CPU monitoring timer				
0	0	0	0	0	0	0	0	0	C	0	0	0	0	1)
30H	30H	30H	30H	30H	30H	30H	30H	30H	43H	30H	30H	30H	30H	
(H)	–	–	(L)	(H)	(L)	(H)	–	–	(L)	(H)	–	–	(L)	

Character A section

1) ⟶

Command				Sub-command			
1	9	0	1	0	0	0	0
31H	39H	30H	31H	30H	30H	30H	30H
(H)	–	–	(L)	(H)	–	–	(L)

(format 7: 4E frame (Binary))

Request type		Serial No.		Fixed value		Network No.	PLC No.	Request destination module I/O No.		Request destination module station No.	Request data length		Following*2
54H	00H	00H	00H	00H	00H	01H	01H	00H	00H	00H	06H	00H	

Data length target range

*2

CPU monitoring timer		Command		Sub-command	
00H	00H	01H	19H	00H	00H

(Continued to next page)

(From previous page)

Item	Message Formats
Response message during normal communication (GOT → host)	(format 6: 4E frame (ASCII))

Response type				Serial No.				Fixed value				Network No.		PLC No.		
D	4	0	0	0	0	0	0	0	0	0	0	0	1	0	1	Following*1
44H	34H	30H	30H	30H	30H	30H	30H	30H	30H	30H	30H	30H	31H	30H	31H	
(H)	–	–	(L)	(H)	–	–	(L)	(H)	–	–	(L)	(H)	(L)	(H)	(L)	

*1

Request destination module I/O No.				Request destination module station No.		Response data length				End code				
0	0	0	0	0	0	0	0	1	2	0	0	0	0	→ 1)
30H	30H	30H	30H	30H	30H	30H	30H	31H	32H	30H	30H	30H	30H	
(H)	–	–	(L)	(H)	(L)	(H)	–	–	(L)	(H)	–	–	(L)	

Character B section

1) →	Year data		Month data		Day data		Hour data		Minute data		Second data		Day-of-week data	
	0	9	1	0	0	1	1	8	4	6	4	9	0	4
	30H	39H	31H	30H	30H	31H	31H	38H	34H	36H	34H	39H	30H	34H
	(H)	(L)	(H)	(L)	(H)	(L)	(H)	(L)	(H)	(L)	(H)	(L)	(H)	(L)

(format 7: 4E frame (Binary))

Request type		Serial No.		Fixed value		Network No.	PLC No.	Request destination module I/O No.		Request destination module station No.	Response data length		Following*2
D4H	00H	00H	00H	00H	00H	01H	01H	00H	00H	00H	09H	00H	

Data length target range

*2

End code		Year data	Month data	Day data	Hour data	Minute data	Second data	Day-of-week data
00H	00H	09H	0AH	01H	12H	2EH	31H	04H

(Continued to next page)

Item	Message Formats
Response message during faulty communication (GOT → host)	(format 6: 4E frame (ASCII))

Response type				Serial No.				Fixed value				Network No.		PLC No.		
D	4	0	0	0	0	0	0	0	0	0	0	0	1	0	1	Following*1
44H	34H	30H	30H	30H	30H	30H	30H	30H	30H	30H	30H	30H	31H	30H	31H	
(H)	–	–	(L)	(H)	–	–	(L)	(H)	–	–	(L)	(H)	(L)	(H)	(L)	

*1

Request destination module I/O No.				Request destination module station No.		Response data length				End code				
0	0	0	0	0	0	0	0	1	6	0	0	5	6	→ 1)
30H	30H	30H	30H	30H	30H	30H	30H	31H	36H	30H	30H	35H	36H	
(H)	–	–	(L)	(H)	(L)	(H)	–	–	(L)	(H)	–	–	(L)	

1) →

Network No.		PLC No.		Request destination module I/O No.				Request destination module station No.		Command				Sub-command			
0	0	0	0	0	0	0	0	0	0	1	9	0	1	0	0	0	0
30H	30H	30H	30H	30H	30H	30H	30H	30H	30H	31H	39H	30H	31H	30H	30H	30H	30H
(H)	(L)	(H)	(L)	(H)	–	–	(L)	(H)	(L)	(H)	–	–	(L)	(H)	–	–	(L)

(format 7: 4E frame (Binary))

Request type		Serial No.		Fixed value		Network No.	PLC No.	Request destination module I/O No.		Request destination module station No.	Response data length		Following*1
D4H	00H	00H	00H	00H	00H	01H	01H	00H	00H	00H	0BH	00H	

Data length target range

*1

End code		Network No.	PLC No.	Request destination module I/O No.		Request destination module station No.	Command		Sub-command	
56H	00H	00H	00H	00H	00H	00H	01H	19H	00H	00H

(2) Set clock data (0901) command

The following shows an example of setting the clock data of GOT.

(Assuming that the clock data of GOT has been set to "2009, October 1, 18:46:49, Thursday".)

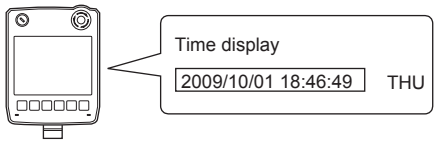

After execution

Item	Message Formats

Request message (host → GOT)

(format 6: 4E frame (ASCII))

Response type				Serial No.				Fixed value				Network No.		PLC No.		Following*1
5	4	0	0	0	0	0	0	0	0	0	0	0	1	0	1	
35H	34H	30H	30H	30H	30H	30H	30H	30H	30H	30H	30H	30H	31H	30H	31H	
(H)	–	–	(L)	(H)	–	–	(L)	(H)	–	–	(L)	(H)	(L)	(H)	(L)	

*1

Request destination module I/O No.				Request destination module station No.		Request data length				CPU monitoring timer				Command				
0	0	0	0	0	0	0	0	1	A	0	0	0	0	0	9	0	1	→ 1)
30H	30H	30H	30H	30H	30H	30H	30H	31H	41H	30H	30H	30H	30H	31H	39H	30H	31H	
(H)	–	–	(L)	(H)	(L)	(H)	–	–	(L)	(H)	–	–	(L)	(H)	–	–	(L)	

Character C section

1) → Sub-command				Year data		Month data		Day data		Hour data		Minute data		Second data		Day-of-week data	
0	0	0	0	0	9	1	0	0	1	1	8	4	6	4	9	0	4
30H	30H	30H	30H	30H	39H	31H	30H	30H	31H	31H	38H	34H	36H	34H	39H	30H	34H
(H)	–	–	(L)	(H)	(L)	(H)	(L)	(H)	(L)	(H)	(L)	(H)	(L)	(H)	(L)	(H)	(L)

(format 7: 4E frame (Binary))

Request type		Serial No.		Fixed value		Network No.	PLC No.	Request destination module I/O No.		Request destination module station No.	Request data length		Following*1
54H	00H	00H	00H	00H	00H	01H	01H	00H	00H	00H	0DH	00H	

Data length target range

*1

CPU monitoring timer		Command		Sub-command		Year data	Month data	Day data	Hour data	Minute data	Second data	Day-of-week data
00H	00H	01H	09H	00H	00H	09H	0AH	01H	12H	2EH	31H	04H

(Continued to next page)

(From previous page)

Item	Message Formats
Response message during normal communication (GOT ⟶ host)	(format 6: 4E frame (ASCII))

Response type				Serial No.				Fixed value				Network No.		PLC No.		
D	4	0	0	0	0	0	0	0	0	0	0	0	1	0	1	Following*1
44H	34H	30H	30H	30H	30H	30H	30H	30H	30H	30H	30H	30H	31H	30H	31H	
(H)	–	–	(L)	(H)	–	–	(L)	(H)	–	–	(L)	(H)	(L)	(H)	(L)	

*1

Request destination module I/O No.				Request destination module station No.		Response data length				End code			
0	0	0	0	0	0	0	0	0	4	0	0	0	0
30H	30H	30H	30H	30H	30H	30H	30H	30H	34H	30H	30H	30H	30H
(H)	–	–	(L)	(H)	(L)	(H)	–	–	(L)	(H)	–	–	(L)

(format 7: 4E frame (Binary))

Data length target range

Request type		Serial No.		Fixed value		Network No.	PLC No.	Request destination module I/O No.		Request destination module station No.	Response data length		End code	
D4H	00H	00H	00H	00H	00H	01H	01H	00H	00H	00H	02H	00H	00H	00H

(Continued to next page)

(From previous page)

Item	Message Formats
Response message during faulty communication (GOT → host)	(format 6: 4E frame (ASCII))

Response type				Serial No.				Fixed value				Network No.		PLC No.		
D	4	0	0	0	0	0	0	0	0	0	0	0	1	0	1	Following*1
44H	34H	30H	30H	30H	30H	30H	30H	30H	30H	30H	30H	30H	31H	30H	31H	
(H)	–	–	(L)	(H)	–	–	(L)	(H)	–	–	(L)	(H)	(L)	(H)	(L)	

*1

Request destination module I/O No.				Request destination module station No.		Response data length				End code				
0	0	0	0	0	0	0	0	1	6	0	0	5	6	→ 1)
30H	30H	30H	30H	30H	30H	30H	30H	31H	36H	30H	30H	35H	36H	
(H)	–	–	(L)	(H)	(L)	(H)	–	–	(L)	(H)	–	–	(L)	

1) →

Network No.		PLC No.		Request destination module I/O No.				Request destination module station No.		Command				Sub-command			
0	0	0	0	0	0	0	0	0	0	0	9	0	1	0	0	0	0
30H	30H	30H	30H	30H	30H	30H	30H	30H	30H	30H	39H	30H	31H	30H	30H	30H	30H
(H)	(L)	(H)	(L)	(H)	–	–	(L)	(H)	(L)	(H)	–	–	(L)	(H)	–	–	(L)

(format 7: 4E frame (Binary))

Request type		Serial No.		Fixed value		Network No.	PLC No.	Request destination module I/O No.		Request destination module station No.	Response data length		Following*2
D4H	00H	00H	00H	00H	00H	01H	01H	00H	00H	00H	0BH	0H	

Data length target range

*2

End code		Network No.	PLC No.	Request destination module I/O No.		Request destination module station No.	Command		Sub-command	
56H	00H	00H	00H	00H	00H	00H	01H	09H	00H	00H

POINT

When a wrong day of the week has been set by the clock data setting command

If a wrong day of the week is set by the clock data setting commands, the clock data will differ from the time displayed on the utility.

Example: When October 01, 2009 (Tuesday) is set by the clock data setting command (the actual day of the week is Thursday)

Thursday (THU) will be displayed on the utility time display.

■ Error code list

The following shows error code, error contents, cause, and measures.

Error code	Description	Measures
0002H	Device point error The specification of device range to read/write has an error.	• Check the specified start device and number of points, and correct it. (☞ 62.3 Device Data Area)
0050H	Request (command)/Response (response) type code error Code other than the specified value is set for command/response type.	• Check the command/response type set in the microcomputer and correct it.
0056H	Device error A non-existent device has been specified.	• Check the devices that can be used and the device ranges. (☞ 62.3 Device Data Area)
0057H	Device point error • The command number of points specification from the microcomputer exceeds the maximum number of points processed at each process (number of points processed in one communication). • The start address (start device number) to specified number of points exceeds the maximum address (device number, step number) for each process.	• Correct the specified number of points, or the start address (device number). (☞ 62.3 Device Data Area)
	When reading data which the command bit length is longer than the specification, the set number of write data points differs from the specified number of points value.	• Check the command data length and set the data again.
0058H	• The command start address (start device number, start step number) specification from the microcomputer exceeds the range that can be specified. • Value outside the GOT parameter setting range is specified in the microcomputer program and file register (R) reading/writing.	• Correct the values to values that can be specified in each process.
	• Word device is specified in the command for bit device. • In the command for word device, a bit device start number is specified in other than hexadecimal.	• Correct the command or the specified device.
00A1H	Request content cannot be analyzed because the text length or request data length is too short.	• Review the text length or the head request data length.
00A2H	Request cannot be processed.	• Correct the request content and command.
00D6H	The specification of network No. and station No. have errors.	• Review the network No., station No. specification method.

62.4.7 Formats 8, 9 (3E frame)

■ Basic format of data communication

This is the same message format as when communication is performed using the MC protocol (3E frame) of the Q/QnA Series serial communication module.
For details of the basic format of data communication, refer to the following manual:

☞ MELSEC-Q/L MELSEC Communication Protocol Reference Manual

This section describes items whose settings differ from the MC protocol of the Q/QnA Series serial communication module, and the dedicated commands for a GOT microcomputer connection.

Example: Request message for the batch read in word units (0401) command
Device name: D, Start device: 100, Number of device points: 2
Communication settings of the GOT side: Network No.=1, PLC No.=1

- Format 8 (3E frame (ASCII))

Subheader				Network No.		PLC No.		Request destination module I/O No.				Request destination module station No.		Request data length				Following*1
5	0	0	0	0	1	0	1	0	0	0	0	0	0	0	0	1	8	
35H	30H	30H	30H	30H	31H	30H	31H	30H	30H	30H	30H	30H	30H	30H	30H	31H	38H	
(H)	(L)	(H)	(L)	(H)	(L)	(H)	(L)	(H)	–	–	(L)	(H)	(L)	(H)	(L)	(H)	(L)	

*1

Character A section

CPU monitoring timer				Command				Sub-command				Device code		Start Device						Device points			
0	0	0	0	0	4	0	1	0	0	0	0	D	*	0	0	0	1	0	0	0	0	0	2
30H	30H	30H	30H	30H	34H	30H	31H	30H	30H	30H	30H	44H	2AH	30H	30H	30H	31H	30H	30H	30H	30H	30H	32H
(H)	(L)	(H)	(L)	(H)	–	–	(L)	(H)	–	–	(L)	(H)	(L)	(H)	–	–	–	–	(L)	(H)	–	–	(L)

Data length target data

- Format 9 (3E frame (Binary))

Subheader		Network No.	PLC No.	Request destination module I/O No.		Request destination module station No.	Request data length		CPU monitoring timer		Command		Sub-command		Start Device			Device code	Device points	
50H	00H	01H	01H	00H	00H	00H	0CH	00H	00H	00H	01H	04H	00H	00H	64H	00H	00H	A8H	02H	00H

Data length target data

■ Details of data items in message format

POINT

Data code during communication

Communication of format 8 is performed in ASCII code.
Communication of the format 9 is performed in Binary code.

The following table shows the contents of the data items.

Data item name	Description	
	Format 8	Format 9
Sub header (Microcomputer side)	Indicates it is a command message.	
	Command message: ASCII "5000" (Fixed value)	Command message: 50H (Upper digit) (Fixed value)
Sub header (GOT side)	Indicates it is a response message.	
	Response message: ASCII "D000" (Fixed value)	Response message: D0H (Upper digit) (Fixed value)
Network No.	Set the same number as the network No. set in the GOT. For setting method of "Communication Detail Settings", refer to the following. ☞ 62.5.1 Setting communication interface (Communication settings)	
	Transmit the data notated in hexadecimal converted to a 2-digit ASCII code, from the upper digit.	Transmit the data notated in hexadecimal converted to a 1-digit binary code, from the upper digit.
PLC No.	Set the same number as the PLC No. set in the GOT. For setting method of "Communication Detail Settings", refer to the following. ☞ 62.5.1 Setting communication interface (Communication settings)	
	Transmit the data notated in hexadecimal converted to a 2-digit ASCII code, from the upper digit.	Transmit the data notated in hexadecimal converted to a 1-digit binary code, from the upper digit.
Request destination module I/O No.	Ignore GOT.	
Request destination module No.	Ignore GOT.	
Request data length	Number of bytes from the start of CPU monitoring timer to the last request data.	
	Transmit the data notated in hexadecimal converted to a 4-digit ASCII code, from the upper digit.	Transmit the data notated in hexadecimal converted to a 2-digit binary code, from the lower digit.
Response data length	Appended to the response message from the microcomputer side. Number of bytes from the start of end code to the last request data.	
	Transmit the data notated in hexadecimal converted to a 4-digit ASCII code, from the upper digit.	Transmit the data notated in hexadecimal converted to a 2-digit binary code, from the lower digit.
CPU monitoring timer	Ignore GOT.	
Command, sub-command	Specifies the access contents from the microcomputer side to GOT. For details of the commands that can be used, refer to the following. ☞ 62.4.2 List of commands	
	Transmit the command and sub-command converted to a 4-digit ASCII code, from the upper digit.	Transmit the command and sub-command converted to a 2-digit binary code, from the lower digit.

<table>
<tr><th rowspan="2">Data item name</th><th colspan="2">Description</th></tr>
<tr><th>Format 8</th><th>Format 9</th></tr>
<tr><td rowspan="2">Device code</td><td colspan="2">Specifies the code by which the device data to be read/written is recognized.
For details of the device range that can be accessed, refer to the following.
62.3 Device Data Area</td></tr>
<tr><td>Transmit the 2-digit ASCII code corresponding to the following device codes.
<table><tr><th>Device name</th><th>Device code</th></tr><tr><td>M</td><td>M*</td></tr><tr><td>SM</td><td>SM</td></tr><tr><td>L</td><td>L*</td></tr><tr><td>D</td><td>D*</td></tr><tr><td>SD</td><td>SD</td></tr><tr><td>R</td><td>R*</td></tr></table></td><td>Transmit the 1-digit binary code corresponding to the following device codes.
<table><tr><th>Device name</th><th>Device code</th></tr><tr><td>M</td><td>90H</td></tr><tr><td>SM</td><td>91H</td></tr><tr><td>L</td><td>92H</td></tr><tr><td>D</td><td>A8H</td></tr><tr><td>SD</td><td>A9H</td></tr><tr><td>R</td><td>AFH</td></tr></table></td></tr>
<tr><td rowspan="2">Head device</td><td colspan="2">Specifies the head No. of the device data to be read/written.
For details of the device range that can be accessed, refer to the following.
62.3 Device Data Area</td></tr>
<tr><td>Transmit the data notated in decimal converted to a 6-digit ASCII code, from the upper digit.</td><td>Transmit the command and sub-command converted to a 3-digit binary code, from the lower digit.</td></tr>
<tr><td rowspan="2">Number of devices</td><td colspan="2">Specifies the number of device data to be read/written. (Setting range: 1 to 40H)
&inequalityRWhen using random read/write command&inequalityL
When setting multiple bit accesses, word accesses or double word accesses, limit the total number of access points to within 64 points
&inequalityRWhen using multiple block batch read/write commands&inequalityL
When setting multiple blocks, limit the total number of points of all blocks to within 64 points.</td></tr>
<tr><td>Transmit the data notated in decimal converted to a 4-digit ASCII code, from the upper digit.</td><td>Transmit the end code converted to a 2-digit binary code, from the lower digit.</td></tr>
<tr><td rowspan="2">Year, month, day, hour, minute, second and day of the week data</td><td colspan="2">Specifies year, month, day, hour, minute, second, and day of the week to be read/set to the GOT clock data.
■ Message Formatsl(1)Read clock data (1901) command
■ Message Formats(2)Set clock data (0901) command</td></tr>
<tr><td>Transmit the data notated in decimal converted to a 2-digit ASCII code, from the upper digit.</td><td>Transmit the data converted to a 2-digit binary code.</td></tr>
<tr><td rowspan="2">End code (Microcomputer side)</td><td colspan="2">Appended to the response message from the microcomputer side. If an error occurs at the microcomputer side, the error code is displayed.
■ Error code list</td></tr>
<tr><td>Transmit the data notated in hexadecimal converted to a 4-digit ASCII code, from the upper digit.</td><td>Transmit the end code converted to a 2-digit binary code, from the lower digit.</td></tr>
</table>

POINT

When connecting a microcomputer, etc. that uses the MC protocol of the Q/QnA series serial communication module with the GOT

When connecting a microcomputer, etc. that uses the MC protocol of the Q/QnA series serial communication module with the GOT, correct the commands to be used and the device ranges to match the GOT specifications.

■ Message Formats

The following shows the message format of the dedicated commands for a microcomputer connection of GOT.

(1) Read clock data (1901) command

The following shows an example of reading the clock data of GOT.
(Assuming that the clock data of GOT has been set to "2009, October 1, 18:46:49, Thursday".)

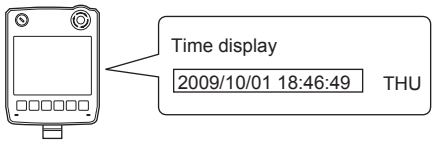

Item	Message Formats
Request message (host ⟶ GOT)	(format 8: 3E frame (ASCII))

Subheader				Network No.		PLC No.		Request destination module I/O No.				Request destination module station No.		Following*1
5	0	0	0	0	1	0	1	0	0	0	0	0	0	
35H	30H	30H	30H	30H	31H	30H	31H	30H	30H	30H	30H	30H	30H	
(H)	–	–	(L)	(H)	(L)	(H)	(L)	(H)	–	–	(L)	(H)	(L)	

*1

Request data length				CPU monitoring timer				Command				Sub-command			
0	0	0	C	0	0	0	0	1	9	0	1	0	0	0	0
30H	30H	30H	43H	30H	30H	30H	30H	31H	39H	30H	31H	30H	30H	30H	30H
(H)	–	–	(L)	(H)	–	–	(L)	(H)	–	–	(L)	(H)	–	–	(L)

Character A section

Data length target data

(format 9: 3E frame (Binary))

Subheader		Network No.	PLC No.	Request destination module I/O No.		Request destination module station No.	Request data length		CPU monitoring timer		Command		Sub-command	
50H	00H	01H	01H	00H	00H	00H	06H	00H	00H	00H	01H	19H	00H	00H

Data length target data

(Continued to next page)

(From previous page)

Item	Message Formats
Response message during normal communication (GOT → host)	(format 8: 3E frame (ASCII))

Subheader				Network No.		PLC No.		Request destination module I/O No.				Request destination module station No.		Response data length				Following*1
D	0	0	0	0	1	0	1	0	0	0	0	0	0	0	0	1	2	
44H	30H	30H	30H	30H	31H	30H	31H	30H	30H	30H	30H	30H	30H	30H	30H	31H	32H	
(H)	–	–	(L)	(H)	(L)	(H)	(L)	(H)	–	–	(L)	(H)	(L)	(H)	–	–	(L)	

*1 Character B section

End code				Year data		Month data		Day data		Hour data		Minute data		Second data		Day-of-week data	
0	0	0	0	0	9	1	0	0	1	1	8	4	6	4	9	0	4
30H	30H	30H	30H	30H	39H	31H	30H	30H	31H	31H	38H	34H	36H	34H	39H	30H	34H
(H)	–	–	(L)	(H)	(L)	(H)	(L)	(H)	(L)	(H)	(L)	(H)	(L)	(H)	(L)	(H)	(L)

Data length target data

(format 9: 3E frame (Binary))

Subheader		Network No.	PLC No.	Request destination module I/O No.		Request destination module station No.	Response data length		End code		Year data	Month data	Day data	Hour data	Minute data	Second data	Day-of-week data
D0H	00H	01H	01H	00H	00H	00H	09H	00H	00H	00H	09H	0AH	01H	12H	2EH	31H	04H

Data length target data

(Continued to next page)

(From previous page)

Item	Message Formats
Response message during faulty communication (GOT → host)	(format 8: 3E frame (ASCII))

Subheader				Network No.		PLC No.		Request destination module I/O No.				Request destination module station No.		Response data length				Following*1
D	0	0	0	0	1	0	1	0	0	0	0	0	0	0	0	1	6	
44H	30H	30H	30H	30H	31H	30H	31H	30H	30H	30H	30H	30H	30H	30H	30H	31H	36H	
(H)	–	–	(L)	(H)	(L)	(H)	(L)	(H)	–	–	(L)	(H)	(L)	(H)	–	–	(L)	

*1

End code				Network No.		PLC No.		Request destination module I/O No.				Request destination module station No.		
0	0	5	6	0	0	0	0	0	0	0	0	0	0	→ 1)
30H	30H	35H	36H	30H	30H	30H	30H	30H	30H	30H	30H	30H	30H	
(H)	–	–	(L)	(H)	(L)	(H)	(L)	(H)	–	–	(L)	(H)	(L)	

Data length target data

1) →	Command				Sub-command			
	1	9	0	1	0	0	0	0
	31H	39H	30H	31H	30H	30H	30H	30H
	(H)	–	–	(L)	(H)	–	–	(L)

Data length target data

(format 9: 3E frame (Binary))

Subheader		Network No.	PLC No.	Request destination module I/O No.		Request destination module station No.	Response data length		Following*2
D0H	00H	01H	01H	00H	00H	00H	0BH	00H	

*2

	End code		Network No.	PLC No.	Request destination module I/O No.		Request destination module station No.	Command		Sub-command	
	56H	00H	00H	00H	00H	00H	00H	01H	19H	00H	00H

Data length target data

(2) Set clock data (0901) command

The following shows an example of setting the clock data of GOT.

(Assuming that the clock data of GOT has been set to "2009, October 1, 18:46:49, Thursday".)

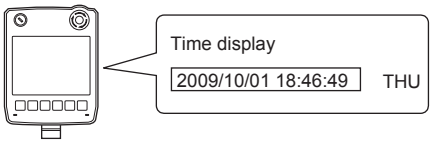

After execution

Item	Message Formats
Request message (host → GOT)	(format 8: 3E frame (ASCII))

Subheader				Network No.		PLC No.		Request destination module I/O No.				Request destination module station No.		Following*1
5	0	0	0	0	1	0	1	0	0	0	0	0	0	
35H	30H	30H	30H	30H	31H	30H	31H	30H	30H	30H	30H	30H	30H	
(H)	–	–	(L)	(H)	(L)	(H)	(L)	(H)	–	–	(L)	(H)	(L)	

*1

Response data length				CPU monitoring timer				Command				
0	0	1	A	0	0	0	0	0	9	0	1	→ 1)
30H	30H	31H	41H	30H	30H	30H	30H	31H	39H	30H	31H	
(H)	–	–	(L)	(H)	–	–	(L)	(H)	–	–	(L)	

Data length target data

Character C section

1) →	Sub-command				Year data		Month data		Day data		Hour data		Minute data		Second data		Day-of-week data	
	0	0	0	0	0	9	1	0	0	1	1	8	4	6	4	9	0	4
	30H	30H	30H	30H	30H	39H	31H	30H	30H	31H	31H	38H	34H	36H	34H	39H	30H	34H
	(H)	–	–	(L)	(H)	(L)	(H)	(L)	(H)	(L)	(H)	(L)	(H)	(L)	(H)	(L)	(H)	(L)

Data length target data

(format 9: 3E frame (Binary))

Subheader		Network No.	PLC No.	Request destination module I/O No.		Request destination module station No.	Request data length		Following*2
50H	00H	01H	01H	00H	00H	00H	0DH	00H	

*2

CPU monitoring timer		Command		Sub-command		Year data	Month data	Day data	Hour data	Minute data	Second data	Day-of-week data
00H	00H	01H	09H	00H	00H	09H	0AH	01H	12H	2EH	31H	04H

Data length target data

(Continued to next page)

(From previous page)

Item	Message Formats
Response message during normal communication (GOT → host)	(format 8: 3E frame (ASCII))

Subheader				Network No.		PLC No.		Request destination module I/O No.				Request destination module station No.		
D	0	0	0	0	1	0	1	0	0	0	0	0	0	Following*1
44H	30H	30H	30H	30H	31H	30H	31H	30H	30H	30H	30H	30H	30H	
(H)	–	–	(L)	(H)	(L)	(H)	(L)	(H)	–	–	(L)	(H)	(L)	

*1

Response data length				End code			
0	0	0	4	0	0	0	0
30H	30H	30H	34H	30H	30H	30H	30H
(H)	–	–	(L)	(H)	–	–	(L)

Data length target data

(format 9: 3E frame (Binary))

Subheader		Network No.	PLC No.	Request destination module I/O No.		Request destination module station No.	Response data length		End code	
D0H	00H	01H	01H	00H	00H	00H	02H	00H	00H	00H

Data length target data

(Continued to next page)

Item	Message Formats
Response message during faulty communication (GOT → host)	(format 8: 3E frame (ASCII))

Subheader				Network No.		PLC No.		Request destination module I/O No.				Request destination module station No.		Response data length				Following*1
D	0	0	0	0	1	0	1	0	0	0	0	0	0	0	0	1	6	
44H	30H	30H	30H	30H	31H	30H	31H	30H	30H	30H	30H	30H	30H	30H	30H	31H	36H	
(H)	–	–	(L)	(H)	(L)	(H)	(L)	(H)	–	–	(L)	(H)	(L)	(H)	–	–	(L)	

*1

End code				Network No.		PLC No.		Request destination module I/O No.				Request destination module station No.		
0	0	5	6	0	0	0	0	0	0	0	0	0	0	→ 1)
30H	30H	35H	36H	30H	30H	30H	30H	30H	30H	30H	30H	30H	30H	
(H)	–	–	(L)	(H)	(L)	(H)	(L)	(H)	–	–	(L)	(H)	(L)	

Data length target data

1) →	Command				Sub-command			
	0	9	0	1	0	0	0	0
	30H	39H	30H	31H	30H	30H	30H	30H
	(H)	–	–	(L)	(H)	–	–	(L)

Data length target data

(format 9: 3E frame (Binary))

Subheader		Network No.	PLC No.	Request destination module I/O No.		Request destination module station No.	Response data length		Following*2
D0H	00H	01H	01H	00H	00H	00H	0BH	00H	

*2

End code		Network No.	PLC No.	Request destination module I/O No.		Request destination module station No.	Command		Sub-command	
56H	00H	00H	00H	00H	00H	00H	01H	09H	00H	00H

Data length target data

POINT

When a wrong day of the week has been set by the clock data setting command

If a wrong day of the week is set by the clock data setting commands, the clock data will differ from the time displayed on the utility.

Example: When October 01, 2009 (Tuesday) is set by the clock data setting command (the actual day of the week is Thursday)

Thursday (THU) will be displayed on the utility time display.

■ Error code list

The following shows error code, error contents, cause, and measures.

Error code	Description	Measures
0002H	Device point error The specification of device range to read/write has an error.	• Check the specified start device and number of points, and correct it. (☞ 62.3 Device Data Area)
0050H	Request (command)/Response (response) type code error Code other than the specified value is set for command/response type.	• Check the command/response type set in the microcomputer and correct it.
0056H	Device error A non-existent device has been specified.	• Check the devices that can be used and the device ranges. (☞ 62.3 Device Data Area)
0057H	Device point error • The command number of points specification from the microcomputer exceeds the maximum number of points processed at each process (number of points processed in one communication). • The start address (start device number) to specified number of points exceeds the maximum address (device number, step number) for each process.	• Correct the specified number of points, or the start address (device number). (☞ 62.3 Device Data Area)
	When reading data which the command bit length is longer than the specification, the set number of write data points differs from the specified number of points value.	• Check the command data length and set the data again.
0058H	• The command start address (start device number, start step number) specification from the microcomputer exceeds the range that can be specified. • Value outside the GOT parameter setting range is specified in the microcomputer program and file register (R) reading/writing.	• Correct the values to values that can be specified in each process.
	• Word device is specified in the command for bit device. • In the command for word device, a bit device start number is specified in other than hexadecimal.	• Correct the command or the specified device.
00A1H	Request content cannot be analyzed because the text length or request data length is too short.	• Review the text length or the head request data length.
00A2H	Request cannot be processed.	• Correct the request content and command.
00D6H	The specification of network No. and station No. have errors.	• Review the network No., station No. specification method.

62.5 GOT Side Settings

62.5.1 Setting communication interface (Communication settings)

Set the channel of the equipment connected to the GOT.

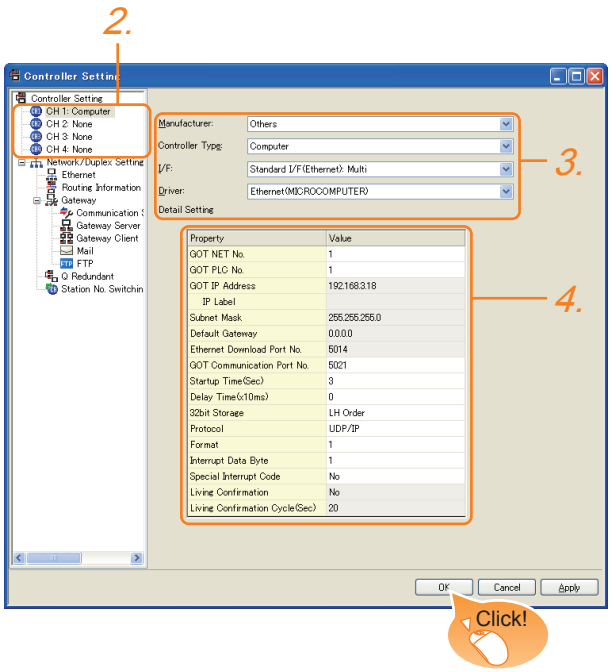

1. Select [Common] → [Controller Setting] from the menu.
2. The Controller Setting window is displayed. Select the channel to be used from the list menu.
3. Set the following items.
   - Manufacturer: Other
   - Controller Type: Computer
   - I/F: Interface to be used
   - Driver: Ethernet (microcomputer)
4. The detailed setting is displayed after Manufacturer, Controller Type, I/F, and Driver are set.
   Make the settings according to the usage environment.
   62.5.2 Communication detail settings

Click the [OK] button when settings are completed.

POINT

The settings of connecting equipment can be set and confirmed in [I/F Communication Setting]. For details, refer to the following.

18.1.2 I/F communication setting

62.5.2 Communication detail settings

Make the settings according to the usage environment.

Item	Description	Range
GOT IP Address*1	Set the IP address of the GOT. (Default: 192.168.3.18)	0.0.0.0 to 255.255.255.255
Subnet Mask*1	Set the subnet mask for the sub network. (Only for connection via router) If the sub network is not used, the default value is set. (Default: 255.255.255.0)	0.0.0.0 to 255.255.255.255
Default Gateway*1	Set the router address of the default gateway where the GOT is connected. (Only for connection via router) (Default: 0.0.0.0)	0.0.0.0 to 255.255.255.255
Ethernet Download Port No.	Set the GOT port No. for Ethernet download. (Default: 5014)	1024 to 5010, 5014 to 65534 (Except for 5011, 5012, 5013, and 49153)
GOT Communication Port No.	Set the GOT port No. for the connection with the Ethernet module. (Default: 5021)	1024 to 5010, 5015 to 65534 (Except for 5011, 5012, 5013, and 49153)
Startup Time	Specify the time period from the GOT startup until GOT starts the communication with the PLC CPU. (Default: 3sec)	3 to 255sec
Delay Time	Set the delay time for reducing the load of the network/destination PLC. (Default: 0ms)	0 to 10000 (× 10 ms)
32bit Storage	Select the steps to store two words (32-bit data). (Default: LH Order)	LH Order/HL Order
Protocol	Select the communication protocol (Default: UDP/IP)	TCP/IP UDP/IP
Format	Select the communication format. (Default: 1)	1 to 9
Interrupt Data Byte	Specify the number of bytes of interrupt data. (Default: 1)	1/2/4
Special Interrupt Code	Set whether or not to output the special interrupt code. (Default: No)	Yes or No
Living Confirmation*2	Set whether or not to perform a existence check. (Default: No)	Yes/No
Living Confirmation Cycle*3	Set the sampling to perform a existence check. (Default: 20s)	10 to 100s

*1 Click the Setting button and perform the setting in the [GOT IP Address Setting] screen.

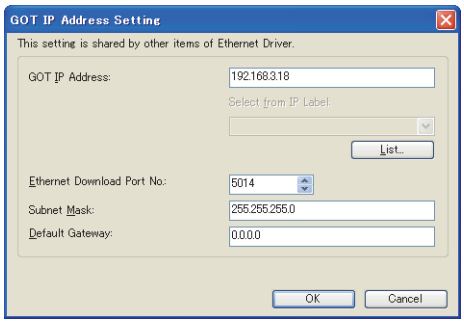

*2 Select [Yes] only when [Protocol] is [TCP/IP].
*3 The setting value can be changed when the [Living Confirmation] is [Yes].

POINT

(1) Special Interrupt Code
The following shows the compatibility between the special interrupt codes and the event types.

Special Interrupt Code (Hex)	Event type
20H	Base Screen*1 and Overlap Window*1 Output when the screens are switched according to the change in the switching device values assigned to 1/2. *1: Base Screen or Overlap Window 1/2 switches independently without being interlocked. (Example of output) When all the switching device values assigned to the Base Screen and Overlap Window1/2 are changed, 3 special interrupt codes are output.
21H	Output when Numerical/ASCII Input is completed.
22H	Output when Recipe data transfer (read-out, write-in) is completed.
23H	Output when Bar code and RFID data have been imported into GOT.

(2) Communication interface setting by Utility
The communication interface setting can be changed on the Utility's [Communication setting] after writing [Communication Settings] of project data.
For details on the Utility, refer to the following manual.

☞ 11. COMMUNICATION INTERFACE SETTING (COMMUNICATION SETTING)

(3) Precedence in communication settings
When settings are made by GT Designer3 or the Utility, the latest setting is effective.

62.6 System Configuration Examples

For sample programs for the microcomputer connection (GOT sample project data and sample programs on the host side), contact your local distributor.

62.7 Device Range that Can Be Set

For details on the device range of controllers that can be used on GT14 Handy, refer to the following manuals.

☞ GT Designer3 Version1 Screen Design Manual (Fundamentals)

☞ GOT1000 Series Connection Manual (Microcomputer, MODBUS Products, Peripherals) for GT Works3

62.8 Precautions

■ GOT clock control

The settings of "time adjusting" or "time broadcast" made on the GOT will be disabled on the PLC.
Use the dedicated commands to set or read out the clock data of microcomputer.

■ UDP/IP connection

When the commands are sent from multiple controllers simultaneously, the GOT may not receive all the commands.
Retry sending the commands on the controller, to receive them on the GOT again.

■ Station monitoring function

The microcomputer connection (Ethernet) does not support the station monitoring function.

■ Interrupt output

The interrupt output is effective only at TCP/IP connection.
At UDP/IP connection, the interrupt output is not enabled.

MODBUS CONNECTIONS

63. MODBUS(R)/RTU CONNECTION . . . . . 63 - 1
64. MODBUS(R)/TCP CONNECTION . . . . . 64 - 1

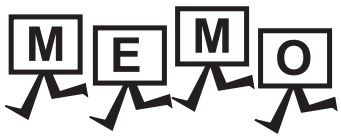
MEMO

63. MODBUS(R)/RTU CONNECTION

63.1 Connectable Model List

For applicable MODBUS/RTU equipment, refer to the following Technical News, or contact your local distributor.

☞ List of Valid Devices Applicable for GOT1000 Series MODBUS® Connection (GOT-A-0037)

63.2 System Configuration

63.2.1 Connecting to MODBUS equipment

Communication driver

MODBUS/RTU

(1) When using the connector conversion box

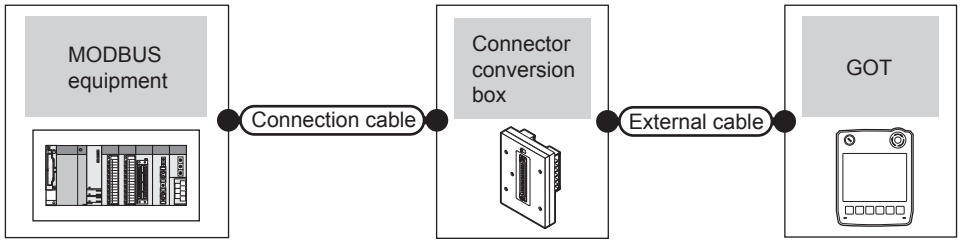

Controller		Connection cable	Connector conversion box	External cable	GOT model	Total distance *1	Number of connectable equipment
Model	Communication type	Cable model Connection diagram number					
MODBUS equipment	RS-232	User preparing RS232 connection diagram 1)	GT11H-CNB-37S	GT11H-C30-37P(3m)	GT14 Handy	6m	1 MODBUS equipment for 1 GOT
	RS-422/485	User preparing RS-422/485 connection diagram 1)	GT11H-CNB-37S	GT11H-C30-37P(3m) GT11H-C60-37P(6m) GT11H-C100-37P(10m)	GT14 Handy	13m	Up to 10 MODBUS equipment for 1 GOT*2

*1 The shortest specification on the MODBUS equipment side is prioritized.

*2 When it is less than 10 units, the number of the maximum connectable units on the MODBUS equipment side will apply.

(2) When using the external cable (GT11H-C□□□-37P)

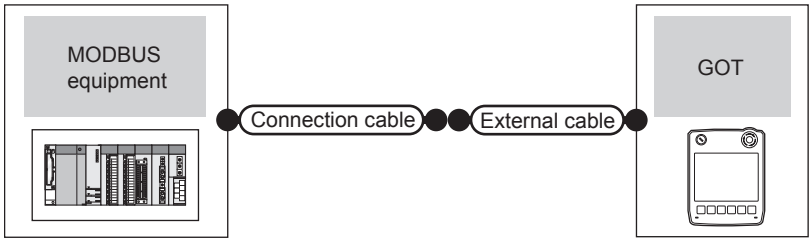

Controller		Connection cable	External cable	GOT model	Total distance *1	Number of connectable equipment
Model	Communication type	Cable model Connection diagram number				
MODBUS equipment	RS-232	User preparing RS232 connection diagram 2)	GT11H-C30-37P(3m)	GT14 Handy	6m	1 MODBUS equipment for 1 GOT
	RS-422/485	User preparing RS-422/485 connection diagram 2)	GT11H-C30-37P(3m) GT11H-C60-37P(6m) GT11H-C100-37P(10m)	GT14 Handy	13m	Up to 10 MODBUS equipment for 1 GOT*2

*1 The shortest specification on the MODBUS equipment side is prioritized.

*2 When it is less than 10 units, the number of the maximum connectable units on the MODBUS equipment side will apply.

(3) When using the external cable (GT11H-C□□□)

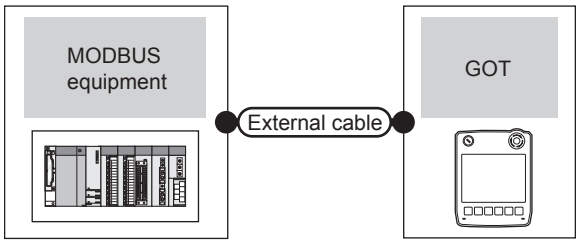

Controller		External cable	GOT model	Total distance*1	Number of connectable equipment
Model	Communication type				
MODBUS equipment	RS-232	GT11H-C30(3m) GT11H-C60(6m) User preparing RS232 connection diagram 3)	GT14 Handy	6m	1 MODBUS equipment for 1 GOT
	RS-422/485	GT11H-C30-42P(3m) GT11H-C60-42P(6m) GT11H-C100-42P(10m) User preparing RS-422/485 connection diagram 3)	GT14 Handy	13m	Up to 10 MODBUS equipment for 1 GOT*2

*1 The shortest specification on the MODBUS equipment side is prioritized.

*2 When it is less than 10 units, the number of the maximum connectable units on the MODBUS equipment side will apply.

63.3 Connection Diagram

The following diagram shows the connection between the GOT and the PLC.

63.3.1 RS-232 cable

■ Connection diagram

RS232 connection diagram 1)

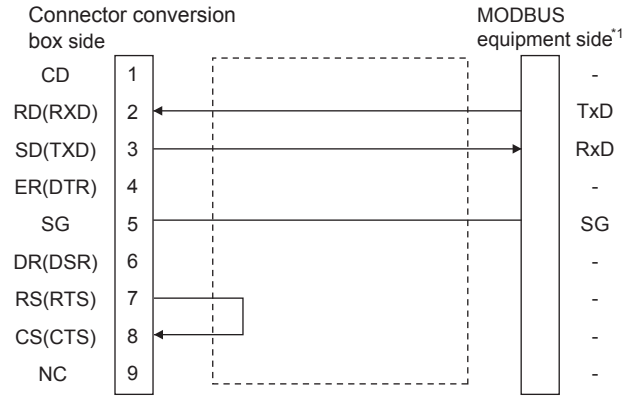

*1 Some MODBUS equipment require the control line (CS, RS, etc.) to be controlled.
Make sure to connect the cables and wires as described in the MODBUS equipment manual.

RS232 connection diagram 2)

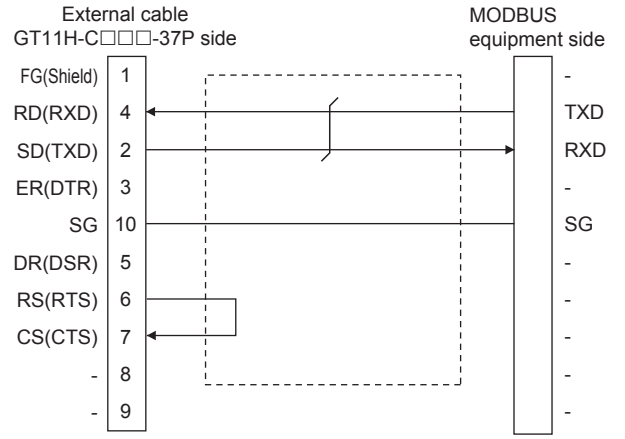

RS232 connection diagram 3)

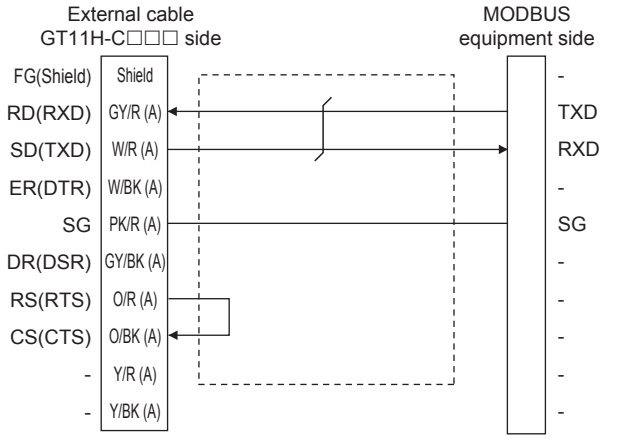

■ Precautions when preparing a cable

(1) Cable length
The total distance (between the GOT and a controller) of RS-232 cable must be 6m or less.

(2) Connector conversion box side connector
For the connector conversion box side connector, refer to the following.
☞ 6.6 Connector Conversion Box

(3) External cable side connector
For the connector specifications of the external cable side, refer to the following.
☞ 8.2 External Cable, Relay Cable

(4) MODBUS equipment side connector
Use the connector compatible with the MODBUS equipment side module.
For details, refer to the MODBUS equipment user's manual.

63.3.2 RS-422/485 cable

The following shows the connection diagrams and connector specifications of the RS-422/485 cable used for connecting the GOT to a PLC.

RS-422/485 connection diagram 1)

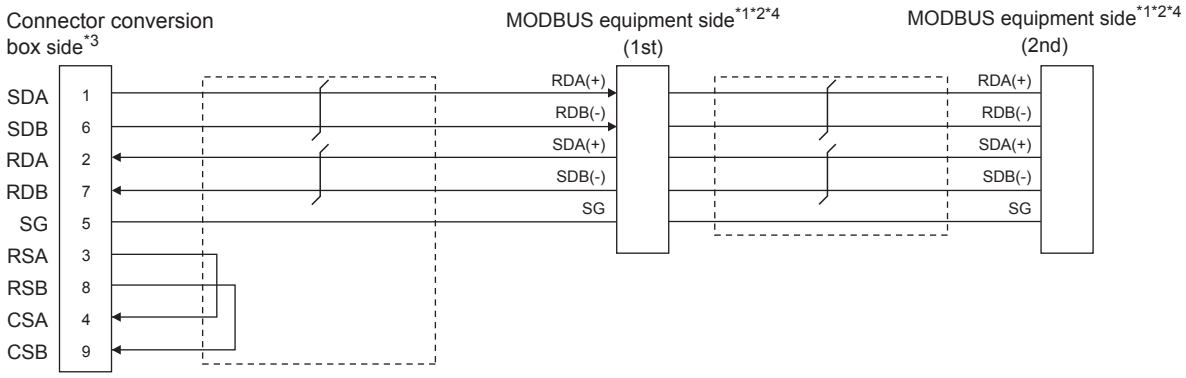

RS-422/485 connection diagram 2)

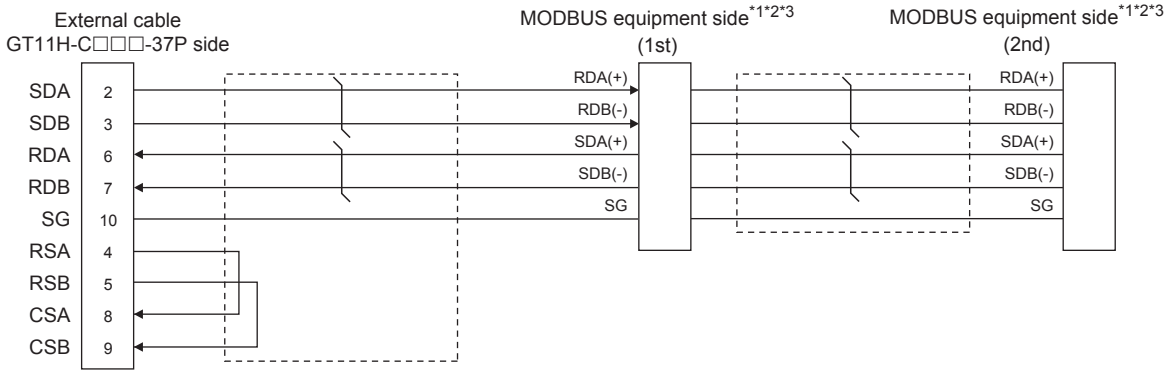

RS-422/485 connection diagram 3)

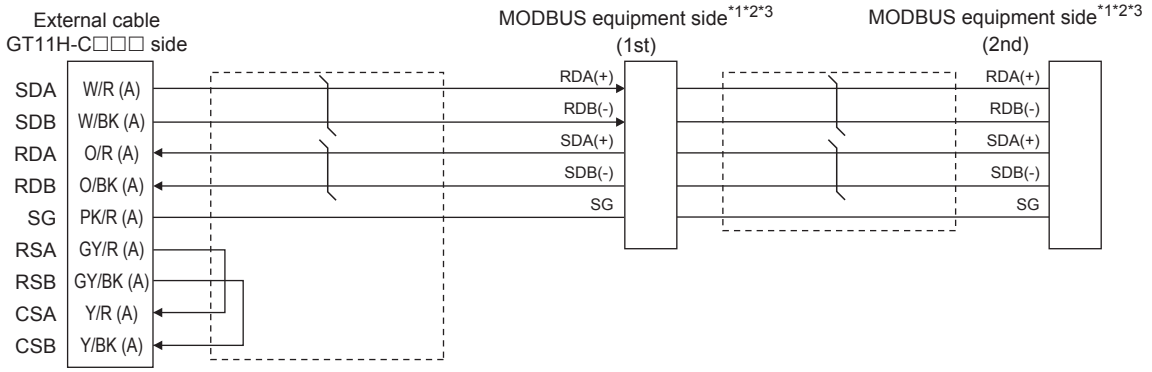

*1 Some MODBUS equipment doesn't have SG. In this case, the wiring between GOT and SG is unnecessary.

*2 Some MODBUS equipment require the control line (CS, RS, etc.) to be controlled.
Make sure to connect the cables and wires as described in the MODBUS equipment manual.

*3 For the terminating resistor of MODBUS equipment, refer to the manual of MODBUS equipment to be used.

■ Precautions when preparing a cable

(1) Cable length
The total distance (between GOT and controllers) of RS-422 cable must be 13m or less.

(2) Connector conversion box side connector
For the connector conversion box side connector, refer to the following.

☞ 6.6 Connector Conversion Box

(3) External cable side connector
For the connector specifications of the external cable side, refer to the following.

☞ 8.2 External Cable, Relay Cable

(4) MODBUS equipment side connector
Use the connector compatible with the MODBUS equipment side module.
For details, refer to the MODBUS equipment user's manual.

■ Connecting terminating resistors

(1) MODBUS equipment side
When connecting a MODBUS equipment to the GOT, a terminating resistor must be connected to the MODBUS equipment.
For details, refer to the MODBUS equipment user's manual.

63.4 GOT Side Settings

63.4.1 Setting communication interface (Communication settings)

Set the channel of the equipment connected to the GOT.

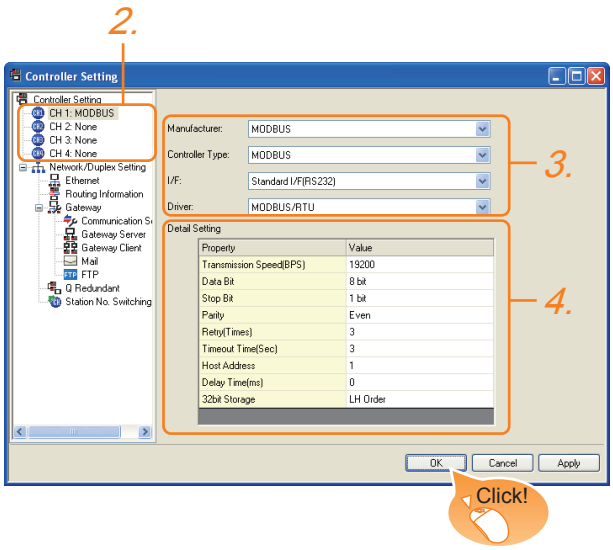

1. Select [Common] → [Controller Setting] from the menu.
2. The Controller Setting window is displayed. Select the channel to be used from the list menu.
3. Set the following items.
   - Manufacturer: MODBUS
   - Controller Type: MODBUS
   - I/F: Interface to be used
   - Driver: MODBUS/RTU
4. The detailed setting is displayed after Manufacturer, Controller Type, I/F, and Driver are set.
   Make the settings according to the usage environment.
   63.4.2 Communication detail settings

Click the OK button when settings are completed.

POINT

The settings of connecting equipment can be set and confirmed in [I/F Communication Setting]. For details, refer to the following.

18.1.2 I/F communication setting

63.4.2 Communication detail settings

Make the settings according to the usage environment.

Item	Description	Range
Transmission Speed	Set this item when change the transmission speed used for communication with the connected equipment. (Default: 19200bps)	9600bps, 19200bps, 38400bps, 57600bps, 115200bps
Data Bit	Set this item when change the data length used for communication with the connected equipment. (Default: 8bit)	7bit/8bit
Stop Bit	Specify the stop bit length for communications. (Default: 1bit)	1bit/2bits
Parity	Specify whether or not to perform a parity check, and how it is performed during communication. (Default: Even)	None Even Odd
Retry	Set the number of retries to be performed when a communication error occurs. (Default: 3times)	0 to 5times
Timeout Time	Set the time period for a communication to time out. (Default: 3sec)	3 to 30sec
Host Address	Specify the host address in the connected network. (Default: 1)	1 to 247
Delay Time*1	Set this item to adjust the transmission timing of the communication request from the GOT. (Default: 0ms)	0 to 300ms
32bit Storage	Select the steps to store two words (32-bit data). (Default: LH Order)	LH Order/ HL Order

*1 The GOT ensures in advance the minimum interval (3.5 characters time) for communication frame defined in the MODBUS/RTU.
Therefore, the actual send delay time is as follows.

Actual send delay time	=	Send delay time set in the communication detail setting	+	3.5 character time

Minimum interval for communication frame defined in MODBUS/RTU

When connecting to MODBUS equipment which requires a delay longer than 3.5 character time, adjust the send delay time.

HINT

If the communication with MODBUS equipment is not established, some equipment which requires a delay longer than 3.5 character time may be connected.
Adjust the send delay time in the communication detail setting.

POINT

(1) Communication interface setting by Utility
The communication interface setting can be changed on the Utility's [Communication setting] after writing [Communication Settings] of project data.
For details on the Utility, refer to the following manual.

11. COMMUNICATION INTERFACE SETTING (COMMUNICATION SETTING)

(2) Precedence in communication settings
When settings are made by GT Designer3 or the Utility, the latest setting is effective.

63.5 MODBUS/RTU Equipment Side Setting

POINT

MODBUS/RTU equipment

For details of the MODBUS/RTU equipment, refer to the manual of MODBUS/RTU equipment to be used.

63.5.1 Communication settings

■ Device setting items for GT Designer3

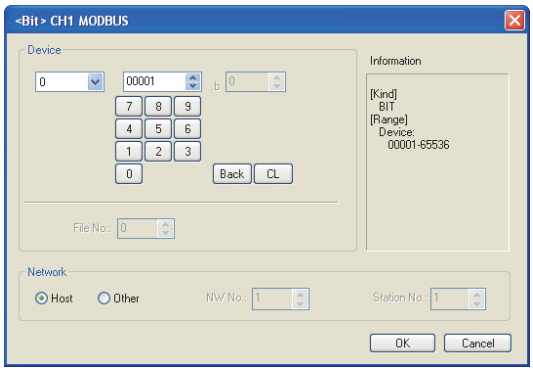

Item		Description
Device		Set the device name, device number, and bit number. The bit number can be set only when specifying the bit of word device.
	File No.	Set the file No. The file No. can be set only when select 6 at [Device].
Information		Displays the device type and setting range which are selected in [Device].
Network		Set the station number of the controller to be monitored.
	Host	Select this item for monitoring the host controller.
	Other	Select this item for monitoring other controllers. After selecting the item, set the station number and network number of the controller to be monitored. NW No.: For the MODBUS®/RTU connection, set "1". For the MODBUS®/TCP connection, set the network No. Station No.: Set the station No.
	Setting of station No. 0	Set the station No. to 0 to write data to all the controllers connected. During monitoring, the host controller is monitored. (When writing the data in numerical input, the data is written to all connected controllers during input, and the host controller is monitored during other than input (displaying).)

■ Function Code

The GOT supports the following function codes.

Function Code	Function	Number of device that is accessible with one message [Unit: point(s)]
0x01	Read Coils	1 to 2000
0x02	Read Discrete Inputs	1 to 2000
0x03	Read Holding Registers	1 to 125
0x04	Read Input Registers	1 to 125
0x05	Write Single Coil	1
0x06	Write Single Register	1
0x0F	Write Multiple Coils	1 to 1968
0x10	Write Multiple Register	1 to 123
0x14	Read File Record	1 to 124
0x15	Write File Record	1 to 122

■ Address

GT Designer3 converts the device numbers into decimal format according to the address map of the MODBUS equipment to be used.

The table below shows the representations on the MODBUS/RTU communication protocol and GT Designer3.

MODBUS/RTU Communication protocol				Representation on GT Designer3
Device name	Function Code to be used		Address	
	Read	Write		
Coil	0x01	0x05 0x0F	0000 0001 to FFFE FFFF	000001 000002 to 065535 065536
Input relay	0x02	-	0000 0001 to FFFE FFFF	100001 100002 to 165535 165536
Input register	0x04	-	0000 0001 to FFFE FFFF	300001 300002 to 365535 365536
Holding register	0x03	0x06 0x10	0000 0001 to FFFE FFFF	400001 400002 to 465535 465536
Extension file register	0x14	0x15	0000 0001 to 270E 270F	600000 600001 to 609998 609999

POINT

Address conversion example

When monitoring the holding register's address "1234H"

GT Designer3 displays "4*****" since GT Designer3 processes the internal conversion in decimal format as follows:

GT Designer3 converts the holding register's address "1234H" to "04660" in decimal format.

Then, "+1" is added to this decimal address since the holding register's address on GT Designer3 always starts from "1."

Therefore, the holding register's address "1234H" is displayed as "404661" on GT Designer3.

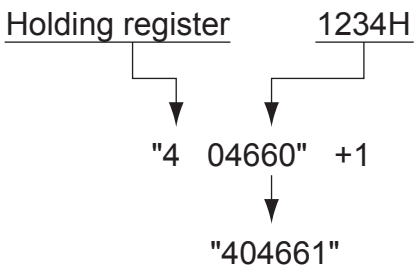

■ MODBUS communication control function on the GS device

(1) Function overview

This function is to prevent the communication response delay that occurs because the devices on the MODBUS network differ from each other in network specification.

This function is effective for the MODBUS network conditions as described below:

- When only a part of function codes is supported (Example: "0F" is not supported)
- When the maximum transfer size of function code is small (Example: The maximum number of coil read times is 1000)

(2) Communication settings

When the MODBUS/RTU communication driver is assigned to multiple channel numbers using the multi-channel function, the following cases are possible. The communication settings are shared between the assigned multiple channel numbers, or the individual communication setting is configured to a specific channel number.

By setting the device GS579, either the GS device used for sharing communication settings (GS570 to GS576) or the GS device used for individual communication setting (GS590 to GS617) is validated.

GS device	Description	Set value
GS579	Validity of setting channel number	Bit0: 0 Configure the Ch1 communication settings between GS570 to GS576. 1 Configure the Ch1 communication settings between GS590 to GS596. Bit1: 0 Configure the Ch2 communication settings between GS570 to GS576. 1 Configure the Ch2 communication settings between GS597 to GS603. Bit2: 0 Configure the Ch3 communication settings between GS570 to GS576. 1 Configure the Ch3 communication settings between GS604 to GS610 Bit3: 0 Configure the Ch4 communication settings between GS570 to GS576. 1 Configure the Ch3 communication settings between GS611 to GS617.

(a) When sharing communication settings between multiple channel numbers

The table below shows the settings for the GS device. The GS device can be changed even in the middle of the operation.

GS device	Description	Set value
GS570	Command selection	Bit0: 0 Using Function Code "0F" 1 Not using Function Code "0F" Bit1: 0 Using Function Code "10" 1 Not using Function Code "10"
GS571	Function Code "01" Specification for the max. number of coil read times	0: 2000 1 to 2000: Specify the maximum number. Other than above: 2000
GS572	Function Code "02" Specification for the max. number of input relay read times	0: 2000 1 to 2000: Specify the maximum number. Other than above: 2000

GS device	Description	Set value
GS573	Function Code "03" Specification for the max. number of holding register read times	0: 125 1 to 125: Specify the maximum number. Other than above: 125
GS574	Function Code "04" Specification for the max. number of input register read times	0: 125 1 to 125: Specify the maximum number. Other than above: 125
GS575	Function Code "0F" Specification for the max. number of multiple-coil write times	0: 800 1 to 1968: Specify the maximum number. Other than above: 1968 When Bit0 of GS570 is "1", the function code "0F" is not used, and therefore the setting of GS575 will be disabled.
GS576	Function Code "10" Specification for the max. number of multiple-holding register write times	0: 100 1 to 123: Specify the maximum number. Other than above: 123 When Bit1 of GS570 is "1", the function code "10F" is not used, and therefore the setting of GS576 will be disabled.

(b) When configuring individual communication settings for specific channel numbers
The table below shows the settings for the GS device.

GS device				Description	Set value
Ch1	Ch2	Ch3	Ch4		
GS 590	GS 597	GS 604	GS 611	Command selection	Bit0: 0 Using Function Code "0F" 1 Not using Function Code "0F" Bit1: 0 Using Function Code "10" 1 Not using Function Code "10"
GS 591	GS 598	GS 605	GS 612	Function Code "01" Specification for the max. number of coil read times	0: 2000 1 to 2000: Specify the maximum number. Other than above: 2000
GS 592	GS 599	GS 606	GS 613	Function Code "02" Specification for the max. number of input relay read times	0: 2000 1 to 2000: Specify the maximum number. Other than above: 2000
GS 593	GS 600	GS 607	GS 614	Function Code "03" Specification for the max. number of holding register read times	0: 125 1 to 125: Specify the maximum number. Other than above: 125
GS 594	GS 601	GS 608	GS 615	Function Code "04" Specification for the max. number of input register read times	0: 125 1 to 125: Specify the maximum number. Other than above: 125
GS 595	GS 602	GS 609	GS 616	Function Code "0F" Specification for the max. number of multiple-coil write times	0: 800 1 to 1968: Specify the maximum number. Other than above: 1968 When Bit0 of GS570 is "1", the function code "0F" is not used, and therefore the setting of GS575 will be disabled.
GS 596	GS 603	GS 610	GS 617	Function Code "10" Specification for the max. number of multiple-holding register write times	0: 100 1 to 123: Specify the maximum number. Other than above: 123 When Bit1 of GS570 is "1", the function code "10F" is not used, and therefore the setting of GS576 will be disabled.

63.5.2 Station number setting

In the MODBUS network, a maximum of 31 MODBUS equipment can be connected to one GOT.

Assign a non-overlapped station number ranging from 1 to 247 arbitrarily to each MODBUS equipment.

In the system configuration, the MODBUS equipment with the station number set with the host address must be included.

The station number can be set without regard to the cable connection order. There is no problem even if station numbers are not consecutive.

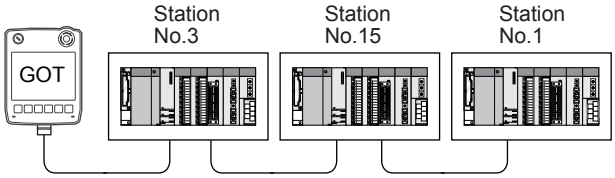

Examples of station number setting

(1) Direct specification
When setting the device, specify the station number of the MODBUS®/RTU equipment of which data is to be changed.

Specification range
1 to 247

(2) Indirect specification
When setting the device, indirectly specify the station number of the MODBUS®/RTU equipment of which data is to be changed using the 16-bit GOT internal data register (GD10 to GD16).
When specifying the station No. from 248 to 254 on GT Designer3, the value of GD10 to GD16 compatible to the station No. specification will be the station No. of the MODBUS®/RTU equipment.

Specification station NO.	Compatible device	Setting range
248	GD10	0 to 255: 0 : All station specification (broadcast) 255 : Host station access For the setting other than the above, an error (dedicated device is out of range) will occur.
249	GD11	
250	GD12	
251	GD13	
252	GD14	
253	GD15	
254	GD16	

(3) All station specification (broadcast)
Target station differs depending on write-in operation or read-out operation.
- For write-in operation, all station will be a target.
- For read-out operation, only the host station will be a target.

63.6 Precautions

■ Station No. settings of the MODBUS equipment side

In the system configuration, the MODBUS equipment with the station number set with the host address must be included. For details of host address setting, refer to the following.

☞ 63.4.1 Setting communication interface (Communication settings)

■ GOT clock control

The settings of "time adjusting" or "time broadcast" made on the GOT will be disabled on the PLC.

■ Cutting the portion of multiple connection of the controller

By setting GOT internal device, GOT can cut the portion of multiple connection of the controller. For example, the faulty station where a communication timeout error occurs can be disconnected from connected equipment. For details of the setting contents of GOT internal device, refer to the following manual.

☞ GT Designer3 Version1 Screen Design Manual

■ MODBUS communication control function on the GS device

At GOT startup, set MODBUS communication control function with project scripts, etc. If settings are changed after communication start, a communication error may occur.

■ Reading holding registers

The GOT reads the holding registers (400001) for checking whether the GOT can communicate with the controller. Therefore, if the equipment does not have holding registers (400001), normal communication may not be performed.

64. MODBUS(R)/TCP CONNECTION

64.1 Connectable Model List

For applicable MODBUS/TCP equipment, refer to the following Technical News, or contact your local distributor.

☞ List of Valid Devices Applicable for GOT1000 Series MODBUS® Connection (GOT-A-0037)

64.2 System Configuration

64.2.1 Connecting to MODBUS/TCP equipment

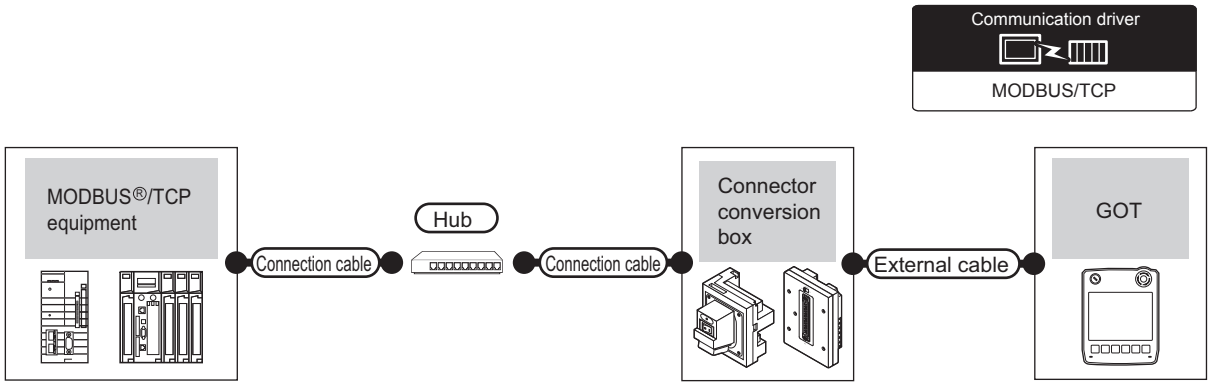

Controller	Communication type	Connection cable*3 Cable model	Connection cable*3 Maximum segment length	External device	Connection cable*3 Cable model	Connection cable*3 Maximum segment length	Connector conversion box	External cable*5	GOT model	Number of connectable equipment
MODBUS/TCP equipment	Ethernet	• 10BASE-T Shielded twisted pair cable (STP) or Unshielded twisted pair cable (UTP) Category 3, 4, and 5 • 100BASE-TX Shielded twisted pair cable (STP) Category 5 and 5e	100m*2	Hub*1	• 10BASE-T Shielded twisted pair cable (STP) or Unshielded twisted pair cable (UTP) Category 3, 4, and 5 • 100BASE-TX Shielded twisted pair cable (STP) Category 5 and 5e	100m*2	GT16H-CNB-42S	GT14H-C30-42P (3m) GT14H-C60-42P (6m) GT14H-C100-42P(10m)	GT14 Handy	*4
							GT16H-CNB-37S	GT11H-C30-37P (3m) GT11H-C60-37P (6m) GT11H-C100-37P(10m)		

*1 Connect the GOT to the MODBUS/TCP equipment via a hub.
Use cables, connectors, and hubs that meet the IEEE802.3 10BASE-T/100BASE-TX standard.

*2 A length between a hub and a node.
The maximum distance differs depending on the Ethernet device to be used.
The following shows the number of the connectable nodes when a repeater hub is used.
- 10BASE-T: Max. 4 nodes for a cascade connection (500m)
- 100BASE-TX: Max. 2 nodes for a cascade connection (205m)

When switching hubs are used, the cascade connection between the switching hubs has no logical limit for the number of cascades.
For the limit, contact the switching hub manufacturer.

*3 Use the straight cable.
The use of shielded twisted pair cable (STP) is recommended in environments in which the performance against noise is required.

*4 Depends on the connected equipment.
Refer to the manual of MODBUS/TCP equipment to be used.

*5 Use C or later version of GT11H-C□□-37P.

64.3 GOT Side Settings

64.3.1 Setting communication interface (Communication settings)

Set the channel of the equipment connected to the GOT.

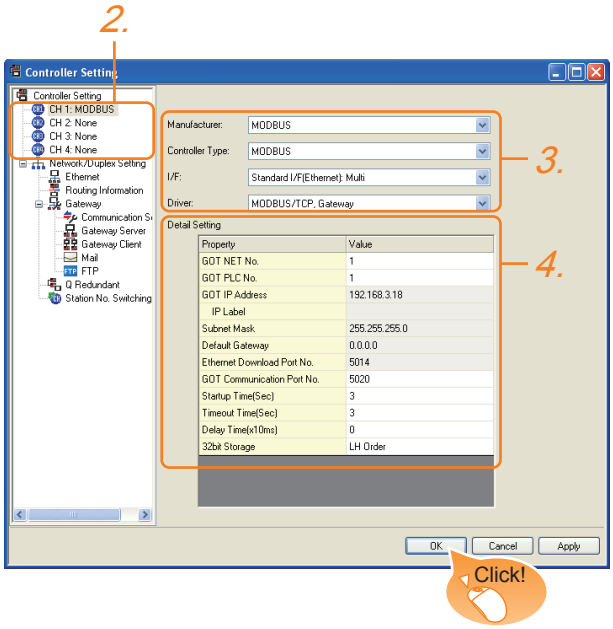

1. Select [Common] → [Controller Setting] from the menu.
2. The Controller Setting window is displayed. Select the channel to be used from the list menu.
3. Set the following items.
   - Manufacturer: MODBUS
   - Controller Type: MODBUS
   - I/F: Interface to be used
   - Driver: MODBUS/TCP, Gateway
4. The detailed setting is displayed after Manufacturer, Controller Type, I/F, and Driver are set.
   Make the settings according to the usage environment.
   64.3.2 Communication detail settings

Click the OK button when settings are completed.

POINT

The settings of connecting equipment can be set and confirmed in [I/F Communication Setting]. For details, refer to the following.

18.1.2 I/F communication setting

64.3.2 Communication detail settings

Make the settings according to the usage environment.

Item	Description	Range
GOT NET No.	Set the network No. of the GOT. (Default: 1)	1 to 239
GOT PLC No.*2	Set the station No. of the GOT. (Default: 1)	1 to 247
GOT IP Address*1	Set the IP address of the GOT. (Default: 192.168.3.18)	0.0.0.0 to 255.255.255.255
Subnet Mask*1	Set the subnet mask for the sub network. (Only for connection via router) If the sub network is not used, the default value is set. (Default:255.255.255.0)	0.0.0.0 to 255.255.255.255
Default Gateway *1	Set the router address of the default gateway where the GOT is connected. (Only for connection via router) (Default: 0.0.0.0)	0.0.0.0 to 255.255.255.255
Ethernet Download Port No.*1	Set the GOT port No. for Ethernet download. (Default: 5014)	1024 to 5010, 5014 to 65534 (Except for 5011, 5012, 5013, and 49153)
GOT Communication Port No.	Set the GOT port No. for the connection with the Ethernet module. (Default: 5020)	1024 to 5010, 5014 to 65534 (Except for 5011, 5012, 5013, and 49153)
Startup Time	Specify the time period from the GOT startup until GOT starts the communication with the PLC CPU. (Default: 3sec)	3 to 255sec
Timeout Time	Set the time period for a communication to time out. (Default: 3sec)	3 to 90sec
Delay Time	Set the delay time for reducing the load of the network/destination PLC. (Default: 0ms)	0 to 10000 (× 10 ms)
32bit Storage	Select the steps to store two words (32-bit data). (Default: LH Order)	LH Order/HL Order

*1 Click the Setting button and perform the setting in the [GOT IP Address Setting] screen.

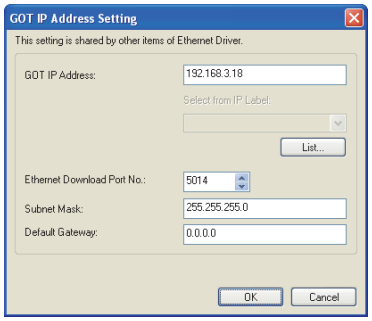

*2 Each of [GOT PLC No.] set in the communication detail setting and [PLC No.] set in the Ethernet setting must be set to different station numbers.

64.3.3 Ethernet setting

64.3.3 Ethernet setting

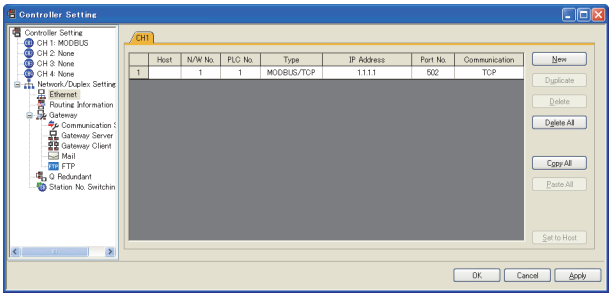

Item	Description	Range
Host	The host is displayed. (The host is indicated with an asterisk (*).)	-
N/W No.	Set the network No. of the connected Ethernet module. (Default: blank)	1 to 239
PLC No.*2	Set the station No. of the connected Ethernet module. (Default: blank)	1 to 247
Type*1	MODBUS/TCP(fixed)	MODBUS/TCP (fixed)
IP Address	Set the IP address of the connected Ethernet module. (Default: blank)	PLC side IP address
Port No.	Set the port No. of the connected Ethernet module. (Default: 502)	1 to 65535
Communication	TCP (fixed)	TCP (fixed)

*1 Select [MODBUS/TCP] for [Type].
For the applicable Ethernet module, refer to the following.

64.6 Example of Connection

*2 Each of [GOT PLC No.] set in the communication detail setting and [PLC No.] set in the Ethernet setting must be set to different station numbers.

64.3.2 Communication detail settings

POINT

(1) Communication interface setting by Utility
The communication interface setting can be changed on the Utility's [Communication setting] after writing [Communication Settings] of project data.
For details on the Utility, refer to the following manual.

11. COMMUNICATION INTERFACE SETTING (COMMUNICATION SETTING)

(2) Precedence in communication settings
When settings are made by GT Designer3 or the Utility, the latest setting is effective.

64.4 PLC side setting

For details of the MODBUS/TCP equipment, refer to the manual of MODBUS/TCP equipment to be used.

64.5 Device Range that Can Be Set

For details on the device range of controllers that can be used on GT14 Handy, refer to the following manuals.

☞ GT Designer3 Version1 Screen Design Manual (Fundamentals)

☞ GOT1000 Series Connection Manual (Microcomputer, MODBUS Products, Peripherals) for GT Works3

■ MODBUS communication control function on the GS device

(1) Function overview

This function is to prevent the communication response delay that occurs because the devices on the MODBUS network differ from each other in network specification.

This function is effective for the MODBUS network conditions as described below:

- When only a part of function codes is supported (Example: "0F" is not supported)
- When the maximum transfer size of function code is small (Example: The maximum number of coil read times is 1000)

(2) Communication settings

When the MODBUS/RTU communication driver is assigned to multiple channel numbers using the multi-channel function, the following cases are possible. The communication settings are shared between the assigned multiple channel numbers, or the individual communication setting is configured to a specific channel number.

By setting the device GS579, either the GS device used for sharing communication settings (GS570 to GS576) or the GS device used for individual communication setting (GS590 to GS617) is validated.

GS device	Description	Set value
GS579	Validity of setting channel number	Bit0: 0 Configure the Ch1 communication settings between GS570 to GS576. 1 Configure the Ch1 communication settings between GS590 to GS596. Bit1: 0 Configure the Ch2 communication settings between GS570 to GS576. 1 Configure the Ch2 communication settings between GS597 to GS603. Bit2: 0 Configure the Ch3 communication settings between GS570 to GS576. 1 Configure the Ch3 communication settings between GS604 to GS610 Bit3: 0 Configure the Ch4 communication settings between GS570 to GS576. 1 Configure the Ch3 communication settings between GS611 to GS617.

(a) When sharing communication settings between multiple channel numbers

The table below shows the settings for the GS device. The GS device can be changed even in the middle of the operation.

GS device	Description	Set value
GS570	Command selection	Bit0: 0 Using Function Code "0F" 1 Not using Function Code "0F" Bit1: 0 Using Function Code "10" 1 Not using Function Code "10"
GS571	Function Code "01" Specification for the max. number of coil read times	0: 1000 1 to 2000: Specify the maximum number. Other than above: 2000
GS572	Function Code "02" Specification for the max. number of input relay read times	0: 1000 1 to 2000: Specify the maximum number. Other than above: 2000
GS573	Function Code "03" Specification for the max. number of holding register read times	0: 125 1 to 125: Specify the maximum number. Other than above: 125
GS574	Function Code "04" Specification for the max. number of input register read times	0: 125 1 to 125: Specify the maximum number. Other than above: 125
GS575	Function Code "0F" Specification for the max. number of multiple-coil write times	0: 800 1 to 800: Specify the maximum number. Other than above: 800 When Bit0 of GS570 is "1", the function code "0F" is not used, and therefore the setting of GS575 will be disabled.
GS576	Function Code "10" Specification for the max. number of multiple-holding register write times	0: 100 1 to 100: Specify the maximum number. Other than above: 100 When Bit1 of GS570 is "1", the function code "10" is not used, and therefore the setting of GS576 will be disabled.

(b) When configuring individual communication settings for specific channel numbers

The table below shows the settings for the GS device.

GS device				Description	Set value
Ch1	Ch2	Ch3	Ch4		
GS590	GS597	GS604	GS611	Command selection	Bit0: 0 Using Function Code "0F" 1 Not using Function Code "0F" Bit1: 0 Using Function Code "10" 1 Not using Function Code "10"
GS591	GS598	GS605	GS612	Function Code "01" Specification for the max. number of coil read times	0: 1000 1 to 2000: Specify the maximum number. Other than above: 2000
GS592	GS599	GS606	GS613	Function Code "02" Specification for the max. number of input relay read times	0: 1000 1 to 2000: Specify the maximum number. Other than above: 2000
GS593	GS600	GS607	GS614	Function Code "03" Specification for the max. number of holding register read times	0: 125 1 to 125: Specify the maximum number. Other than above: 125
GS594	GS601	GS608	GS615	Function Code "04" Specification for the max. number of input register read times	0: 125 1 to 125: Specify the maximum number. Other than above: 125
GS595	GS602	GS609	GS616	Function Code "0F" Specification for the max. number of multiple-coil write times	0: 800 1 to 800: Specify the maximum number. Other than above: 800 When Bit0 of GS570 is "1", the function code "0F" is not used, and therefore the setting of GS575 will be disabled.
GS596	GS603	GS610	GS617	Function Code "10" Specification for the max. number of multiple-holding register write times	0: 100 1 to 100: Specify the maximum number. Other than above: 100 When Bit1 of GS570 is "1", the function code "10" is not used, and therefore the setting of GS576 will be disabled.

64.6 Example of Connection

64.6.1 Connecting to SCHNEIDER PLC (Modicon Premium series and Modicon Quantum series)

■ System Configuration

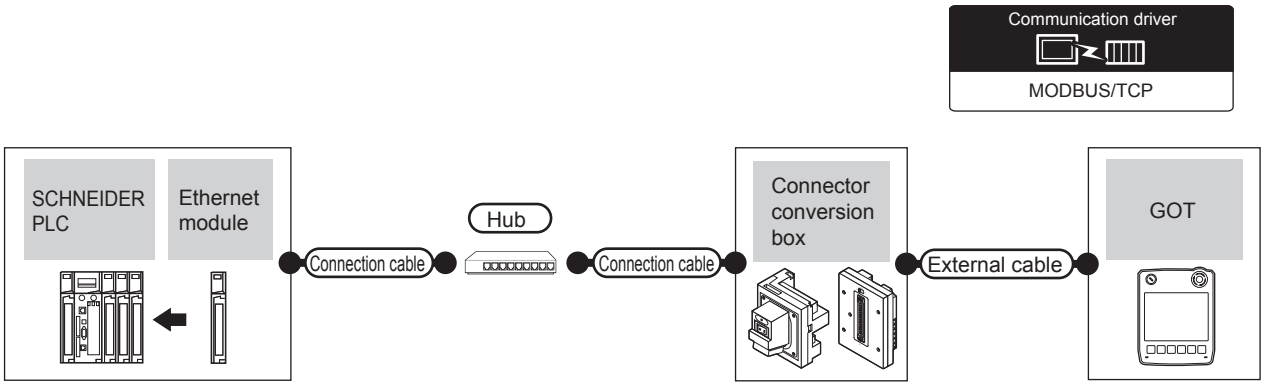

PLC			Connection cable*4		External device	Connection cable*4		Connector conversion box	External cable*5	GOT model	Number of connectable equipment
Model	Ethernet module*3	Communication type	Cable model	Maximum segment length		Cable model	Maximum segment length				
Modicon Premium series	TSX ETY 4102 TSX ETY 5102	Ethernet	• 10BASE-T Shielded twisted pair cable (STP) or Unshielded twisted pair cable (UTP) Category 3, 4, and 5 • 100BASE-TX Shielded twisted pair cable (STP) Category 5 and 5e	100m*2	Hub*1	• 10BASE-T Shielded twisted pair cable (STP) or Unshielded twisted pair cable (UTP) Category 3, 4, and 5 • 100BASE-TX Shielded twisted pair cable (STP) Category 5 and 5e	100m*2	GT16H-CNB-42S	GT14H-C30-42P (3m) GT14H-C60-42P (6m) GT14H-C100-42P (10m)	GT14 Handy	64 GOTs for 1 PLC
								GT16H-CNB-37S	GT11H-C30-37P (3m) GT11H-C60-37P (6m) GT11H-C100-37P (10m)		
Modicon Quantum series	140 NOE 771 00 140 NOE 771 10 140 NWM 100 00							GT16H-CNB-42S	GT14H-C30-42P (3m) GT14H-C60-42P (6m) GT14H-C100-42P (10m)		
								GT16H-CNB-37S	GT11H-C30-37P (3m) GT11H-C60-37P (6m) GT11H-C100-37P (10m)		

*1 Connect the GOT to the Ethernet module via a hub.
Use cables, connectors, and hubs that meet the IEEE802.3 10BASE-T/100BASE-TX standard.

*2 A length between a hub and a node.
The maximum distance differs depending on the Ethernet device to be used.
The following shows the number of the connectable nodes when a repeater hub is used.
- 10BASE-T: Max. 4 nodes for a cascade connection (500m)
- 100BASE-TX: Max. 2 nodes for a cascade connection (205m)

When switching hubs are used, the cascade connection between the switching hubs has no logical limit for the number of cascades.
For the limit, contact the switching hub manufacturer.

*3 Product manufactured by SCHNEIDER ELECTRIC SA. For details of the product, contact SCHNEIDER ELECTRIC SA.

*4 Use the straight cable.
The use of shielded twisted pair cable (STP) is recommended in environments in which the performance against noise is required.

*5 Use C or later version of GT11H-C□□-37P.

■ PLC side setting

For details of SCHNEIDER PLC, refer to the SCHNEIDER PLC user's Manual.

(1) Parameter setting

Set the parameter settings with programming software for SCHNEIDER PLC.

(a) For Modicon Premium series

Set for PL7 Pro programming software.

Item	Set value
Processors	Connected CPU module
Memory cards	Memory card to be used
Module	Connected Ethernet module
IP Address	IP address for Ethernet module
Size of global address fields	Setting for device points Bits: Coil, Input Words: Input register, Maintenance register

(b) For Modicon Quantum series

Set for Concept programming software.

Item	Set value
PLC Selection	Connected CPU module
TCP/IP Ethernet	Numbers of unit
I/O Module Selection	Connected Ethernet module
Internet Address	IP address for Ethernet module

64.6.2 Connecting to YOKOGAWA PLC (STARDOM)

■ System Configuration

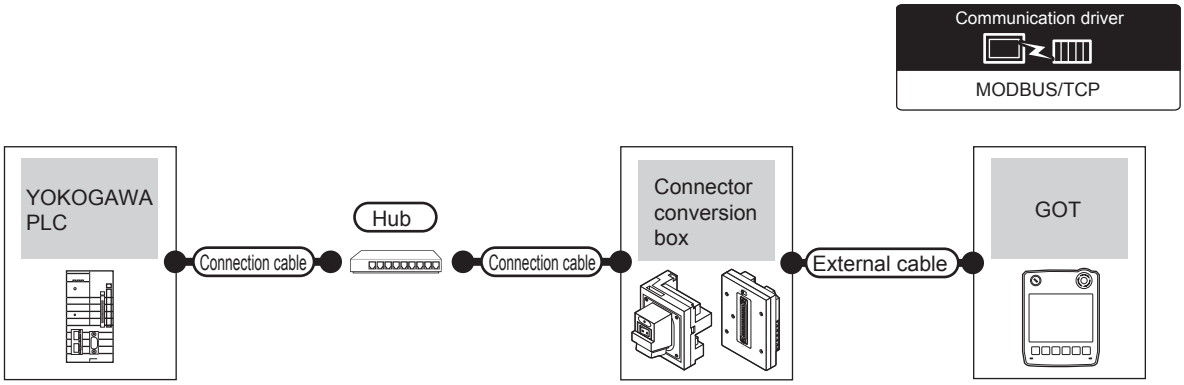

PLC		Connection cable*4		External device	Connection cable*4		Connector conversion box	External cable*5	GOT model	Number of connectable equipment
Model	Communication type	Cable model	Maximum segment length		Cable model	Maximum segment length				
STARDOM*1	Ethernet	• 10BASE-T Shielded twisted pair cable (STP) or Unshielded twisted pair cable (UTP) Category 3, 4, and 5 • 100BASE-TX Shielded twisted pair cable (STP) Category 5 and 5e	100m*3	Hub*2	• 10BASE-T Shielded twisted pair cable (STP) or Unshielded twisted pair cable (UTP) Category 3, 4, and 5 • 100BASE-TX Shielded twisted pair cable (STP) Category 5 and 5e	100m*3	GT16H-CNB-42S	GT14H-C30-42P (3m) GT14H-C60-42P (6m) GT14H-C100-42P(10m)	GT14 Handy	126 GOTs for 1 PLC
							GT16H-CNB-37S	GT11H-C30-37P (3m) GT11H-C60-37P (6m) GT11H-C100-37P(10m)		

*1 When connecting STARDOM to MODBUS®/TCP, Modbus Communication Portfolio License is required.
For details, refer to the following manual.
☞ YOKOGAWA PLC user's Manual

*2 To connect a GOT to a PLC, connect to the PCL Ethernet port via a hub.
Use cables, connectors, and hubs that meet the IEEE802.3 10BASE-T/100BASE-TX standard.

*3 A length between a hub and a node.
The maximum distance differs depending on the Ethernet device to be used.
The following shows the number of the connectable nodes when a repeater hub is used.
• 10BASE-T: Max. 4 nodes for a cascade connection (500m)
• 100BASE-TX: Max. 2 nodes for a cascade connection (205m)
When switching hubs are used, the cascade connection between the switching hubs has no logical limit for the number of cascades.
For the limit, contact the switching hub manufacturer.

*4 Use the straight cable.
The use of shielded twisted pair cable (STP) is recommended in environments in which the performance against noise is required.

*5 Use C or later version of GT11H-C□□-37P.

■ PLC side setting

Make the communication settings as shown below. For details of the communication settings, refer to the peripheral software manual for YOKOGAWA PLC.

POINT

Connection between STARDOM and the PC for communication settings

For the communication settings of STARDOM, STARDOM and the PC for communication settings must be connected to Ethernet using the Resource Configurator (peripheral software).

(1) Modbus Communication Portfolio License

To set the communication settings for STARDOM, an installation of Modbus Communication Portfolio License is required.
For details on the communication settings, refer to the following manual.

☞ STARDOM FCN/FCJ Guide

(2) Defining Logic POU

Define Logic POU using Logic Designer (peripheral software), and download the project to STARDOM.

(a) Start Logic Designer and create a new project using a template.
Use [STARDOM Serial Communication] template.

(b) Insert Firmware Library to the new project.
- Right-click [Library] under the project tree in Logic Designer.
- Right-click [Insert] and select [Firmware Library].
- Double-click the [SD_FCXPLCE_LIB] folder and double-click [SD_FCXPLCE_LIB.fwl] to select it.
- The library path inserted in the procedures above is as follows.
{Install Folder}\LogicDesigner\Mwt\Plc\Fw_lib\SD_FCXPLCE_LIB\SD_FCXPLCE_LIB.fwl

(c) Insert User Library to the new project.
- Right-click [Library] under the project tree in Logic Designer.
- Right-click [Insert] and select [User Library].
- Double-click [SD_CMODBUSE_PF.mwt], [SD_CUTIL_PF.mwt] and [SD_CMODBUSS_PF.mwt] to select them.
- (When [STARDOM Serial Communication] is used for the template, [SD_CUTIL_PF.mwt] is inserted as default.
- The library path inserted in the procedures above is as follows.
{Install Folder}\LogicDesigner\Libraries\SD_CMODBUSE_PF.mwt
{Install Folder}\LogicDesigner\Libraries\SD_CUTIL_PF.mwt
{Install Folder}\LogicDesigner\Libraries\SD_CMODBUSS_PF.mwt

(d) Copy a sample project POU to the new project.
- Open "SD_CMODBUSE_Sample1.mwt".
- Right-click [ComEServerModbus*] in the Logic POU under the project tree in the SD_CMODBUSE_Sample1 project, and select [Copy].
- Right-click the [Logic POU] under the project tree in the previously created project, and select [Paste].
- Double-click the [ComEServerModbus*] file in the [ComEServerModbus*] folder.
- For the following terminals, set as shown below.

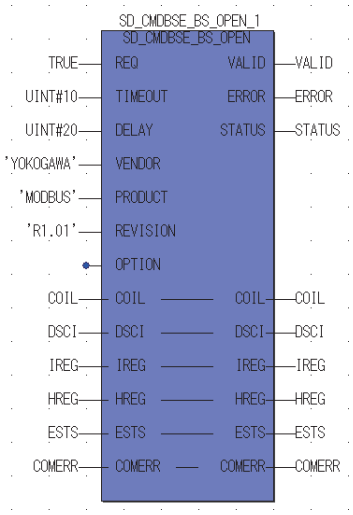

(e) Set devices to be monitored by a GOT.
- Right-click the [ComEServerModbus*] file in the [ComEServerModbus*] folder in the logic POU under the project tree and select [Insert] - [Cord worksheet].
- Set the variable devices to be monitored.

(f) Defining the instance
Instantiate Logic POU. Define an already defined instance to Task0.
- Right-click the [Physical hardware] - [Configuration:IPC_40/FCX01:FCX/Tasks/Task0:CYCLIC] and select [Insert] - [Program instance].
- Define the program instance name and select ComEServerModbus for the program type.

(g) Defining Target Setting
Define the IP address of STARDOM to set the communication settings.
Double-click [Physical hardware] - [Configuration:IPC_33/FCX01:FCX/Target Setting] and input the IP address or the host name.

(h) Downloading the project
- Execute [Build] - [Make].
(Same as when pressing the function key F9)
- Download after confirming that the compile error does not occur.
Select [Download] in the project control dialog displayed when [Online] - [Project control] is selected.
- When the download is completed, start STARDOM.

■ Device range

When performing monitoring with the GOT connected to a YOKOGAWA PLC and setting devices for objects, use devices within the device range of the YOKOGAWA PLC.
When a device outside the range is set on an object, an indefinite value is displayed on the object.
(No error is displayed in the system alarm.)
For details on the device range of YOKOGAWA PLCs, refer to the following manual:

☞ YOKOGAWA PLC user's Manual

■ Connecting to STARDOM

(1) For dual-redundant configuration
When STARDOM is configured with a redundant system, the connection is not supported.

(2) Not communicating with GOT and STARDOM in a specified period
When the GOT does not communicate with STARDOM in a specified period during the GOT is turned on, STARDOM disconnects the line for the GOT. As the line is disconnected, the GOT displays an error when the GOT monitors STARDAM after the disconnection.
After the error displayed as the system alarm (No.402: timeout error) on the GOT, the normal communication is recovered and the GOT can monitor STARDOM.

64.7 Precautions

■ When connecting to multiple GOTs

(1) Setting PLC No.

When connecting two or more GOTs in the MODBUS®/TCP network, set each [PLC No.] to the GOT.

☞ 64.3.1 Setting communication interface (Communication settings)

(2) Setting IP address

Do not use the IP address "192.168.0.18" when using multiple GOTs.
A communication error may occur on the GOT with the IP address.

■ When setting IP address

Do not use "0" and "255" at the end of an IP address.

(Numbers of *.*.*.0 and *.*.*.255 are used by the system)

The GOT may not monitor the controller correctly with the above numbers.

Consult with the administrator of the network before setting an IP address to the GOT and controller.

■ When connecting to the multiple network equipment (including GOT) in a segment

By increasing the network load, the transmission speed between the GOT and PLC may be reduced.

The following actions may improve the communication performance.

- Using a switching hub
- More high speed by 100BASE-TX (100Mbps)
- Reduction of the monitoring points on GOT

■ MODBUS communication control function on the GS device

At GOT startup, set MODBUS communication control function with project scripts, etc. If settings are changed after communication start, a communication error may occur.

CONNECTIONS TO PERIPHERAL EQUIPMENT

65. VNC(R) SERVER CONNECTION . . . . . 65 - 1

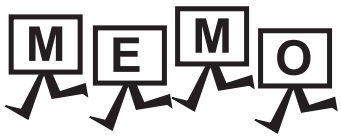
MEMO

65. VNC(R) SERVER CONNECTION

65.1 Connectable Model List

The VNC® server can be connected to the following VNC® client.

Controller	Software
PC	UltraVNC

65.2 System Configuration

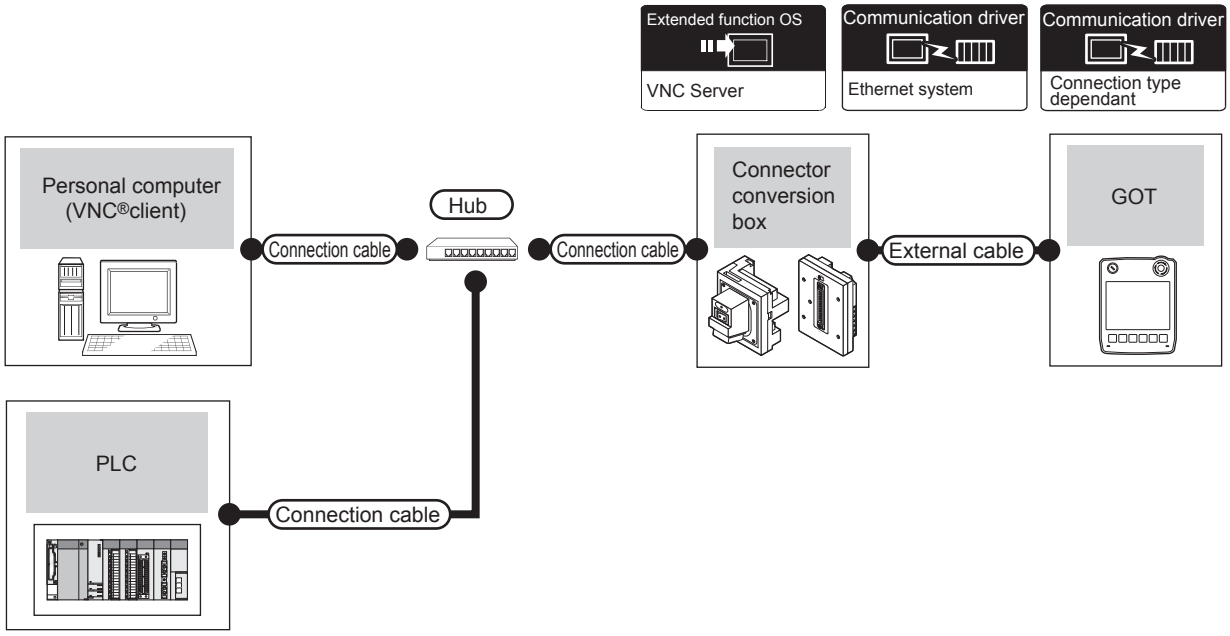

PC (VNC® client)	Connection cable*1*2	Maximum segment length*3	Connector conversion box	External cable*4	GOT (VNC® server)		PLC	Number of connectable equipment
					Option device	Model		
To be selected by the user.	• 10BASE-T Shielded twisted pair cable (STP) or Unshielded twisted pair cable (UTP) Category 3, 4, and 5 • 100BASE-TX Shielded twisted pair cable (STP) Category 5 and 5e	100m	GT16H-CNB-42S	GT14H-C30-42P (3m) GT14H-C60-42P (6m) GT14H-C100-42P(10m)	- (Built into GOT)	GT14 Handy	For the system configuration between the GOT and PLC, refer to each chapter.	1 PC for 1 GOT
			GT16H-CNB-37S	GT11H-C30-37P (3m) GT11H-C60-37P (6m) GT11H-C100-37P(10m)				

*1 The destination connected with the twisted pair cable varies with the configuration of the applicable Ethernet network system. Connect to the Ethernet module, hub, transceiver, wireless LAN adapter (such as NZ2WL-JPA and NZ2WL-JPS), or other system equipment corresponding to the applicable Ethernet network system.
Use cables, connectors, and hubs that meet the IEEE802.3 10BASE-T/100BASE-TX standard.
For the controllers that allow the connection of a wireless LAN adapter and the setting method of wireless LAN adapters, refer to the manual of the wireless LAN adapter to be used.

*2 A straight cable is available. When connecting the GOT and PC directly with Ethernet cable, a cross cable is also available.

*3 A length between a hub and a node.
The maximum distance differs depending on the Ethernet device to be used.

The following shows the number of the connectable nodes when a repeater hub is used.
- 10BASE-T: Max. 4 nodes for a cascade connection (500m)
- 100BASE-TX: Max. 2 nodes for a cascade connection (205m)

When switching hubs are used, the cascade connection between the switching hubs has no logical limit for the number of cascades.
For the limit, contact the switching hub manufacturer.

*4 Use C or later version of GT11H-C□□-37P.

HINT

System configuration between the GOT and PLC

For the system configuration between the GOT and PLC, refer to each chapter.

☞ Mitsubishi Products

☞ Non-Mitsubishi Products 1, Non-Mitsubishi Products 2

☞ Microcomputer, MODBUS Products, Peripherals

65.3 GOT Side Settings

65.3.1 VNC(R) server function setting

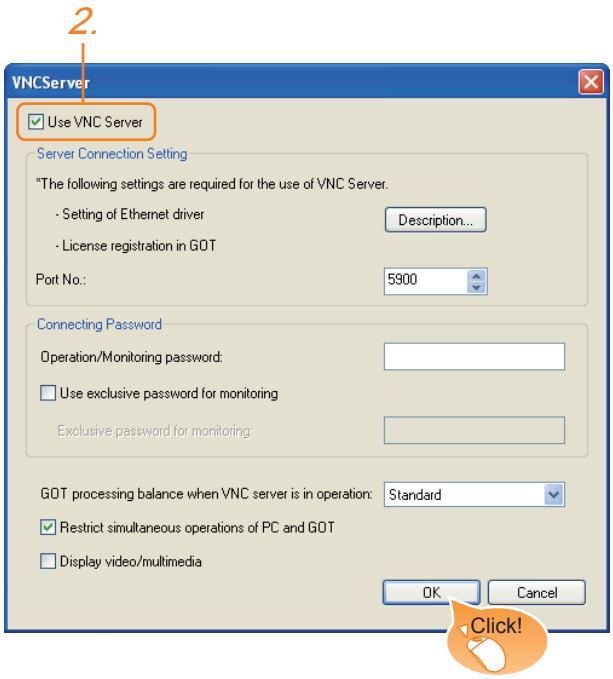

1. Select [Common] → [Peripheral Setting] → [VNC Server] from the menu.
2. Check [Use VNC Server] of [VNC Server] to set.
   For details on the settings, refer to the following.

   ☞ GT Designer3 Version1 Screen Design Manual (Functions)

Click the OK button when settings are completed.

65.3.2 Setting communication interface (Communication settings)

For using the VNC® server, install an Ethernet communication driver to the GOT and set the communication interface.

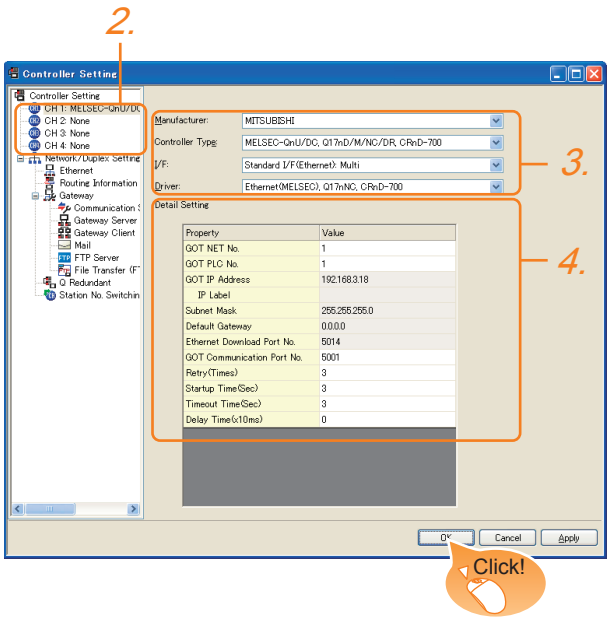

1. Select [Common] → [Controller Setting] from the menu.
2. The Controller Setting window is displayed. Select the channel to be used from the list menu.
3. Set Manufacturer, Controller Type, I/F, and Driver according to the connected equipment to be used.
4. The detailed setting is displayed after Manufacturer, Controller Type, I/F, and Driver are set.
   Make the settings according to the usage environment.

Click the OK button when settings are completed.

POINT

Ethernet system driver

To use the VNC® server, any of the following Ethernet communication drivers must be installed to the GOT.

- Gateway
- Ethernet Download
- Ethernet(MELSEC), Q17nNC, CRnD-700
- Ethernet(MELSEC), Q17nNC, CRnD-700, Gateway
- Ethernet(FX), Gateway
- Ethernet (OMRON), Gateway
- Ethernet (TOSHIBA nv), Gateway
- Ethernet (YASKAWA), Gateway
- Ethernet (YOKOGAWA), Gateway
- Ethernet(AB), Gateway
- Ethernet (SIEMENS S7), Gateway
- Ethernet (SIEMENS OP), Gateway
- MODBUS/TCP, Gateway
- Ethernet (microcomputer)

To connect controllers including a PLC to the GOT by using the Ethernet connection, an additional setting is required.

If an Ethernet communication driver other than the ones described above is used, set [Destination I/F] of [Ethernet Download] on the [PC (Data Transfer)] dialog box (In the peripheral setting).

For the details of [Ethernet Download], refer to the following.

☞ GT Designer3 Version1 Screen Design Manual (Fundamentals)

65.4 Personal Computer Side Setting

When the GOT is connected to a personal computer (VNC® client), install the VNC® client software to the personal computer to be connected and configure the settings.

For the details of the installation and setting methods of the VNC® client software, refer to the following.

☞ GT Designer3 Version1 Screen Design Manual (Functions)

REVISIONS

* The manual number is given on the bottom left of the back cover.

Print Date	* Manual Number	Sub Number	Revision
Oct. 2013	JY997D50201 JY997D50202	A	First edition
Jan. 2014	JY997D50201 JY997D50202	B	Compatible with GT Works3 Version1.108N • FX3U-232-ADP-MB compatible • RS-422/485 adapter (L6ADP-R4) compatible • FA transparent function (MX Component 4.03D) compatible • YOKOGAWA temperature controller (UT75A) compatible • FX3GE compatible • FREQROL-A800/F800 and E700EX compatible • MELSERVO-JE compatible • Azbil (former Yamatake) temperature controller (AHC2001) compatible
Apr. 2014	JY997D50201 JY997D50202	C	Compatible with GT Works3 Version1.112S • Q24DHCCPU-VG is supported. • The enlargement of the communication setting range of the TOSHIBA PLC is supported. • The ALLEN-BRADLEY PLC MicroLogix1400 is supported. • Indirect specification all station specification for the station No. of MODBUS/RTU are supported.
Jun. 2014	JY997D50201 JY997D50202	D	Compatible with GT Works3 Version1.117X • MELSEC iQ-R series are supported. • Communication driver (Serial (MELSEC)) is supported.
Jul. 2014	JY997D50201 JY997D50202	E	Compatible with GT Works3 Version1.118Y • MELSEC-WS (WS0-CPU3) is supported. • FUJI PLC MICREX-SX SPH compatible • SICK safety controller (FX3-CPU320002) compatible
Sep. 2014	JY997D50201 JY997D50202	F	With wall-mounting Attachment is added.
Jan. 2015	JY997D50201 JY997D50202	G	Compatible with GT Works3 Version1.126G • C Controller module (MELSEC iQ-R Series) is supported. • MELSEC iQ-F Series is supported. • FA Transparent Function MELSEC iQ-R Series MX Component, MX Sheet are supported. C Controller module (MELSEC iQ-R Series) CW Configurator is supported. • Servo amplifier connection MELSERVO-J4-*A-RJ compatible
Apr. 2015	JY997D50201 JY997D50202	H	Compatible with GT Works3 Version1.130L • FUJI PLC (MICREX-SX SPH) Serial Connection is supported.
Jul. 2015	JY997D50201 JY997D50202	J	Compatible with GT Works3 Version1.136S • MELSEC iQ-R Series RnENCPU connection is supported. • MELSEC iQ-R Series Device range extention (extended SRAM cassette is supported).
Oct. 2015	JY997D50201 JY997D50202	K	Compatible with GT Works3 Version1.144A • MELSEC iQ-R Series RnSFCPU connection is supported. • MODBUS(R)/TCP connection Port No. extension compatible
Dec. 2015	JY997D50201 JY997D50202	L	Compatible with GT Works3 Version1.150G • Q26DHCCPU-LS is supported. • FA Transparent Function • MX Component Ver 4.11M is supported. • The PC link module F3LC11-2F of PLCs manufactured by Yokogawa Electric Corporation is supported.
Apr. 2017	JY997D50201 JY997D50202	M	Some corrections
Jun. 2017	JY997D50201 JY997D50202	N	Some corrections
Dec. 2017	JY997D50201 JY997D50202	P	Some corrections

Print Date	* Manual Number	Sub Number	Revision
Apr. 2018	JY997D50201 JY997D50202	Q	Some corrections
Jun. 2020	JY997D50201 JY997D50202	R	Some corrections
Oct. 2020	JY997D50201 JY997D50202	S	Some corrections
Oct. 2022	JY997D50201 JY997D50202	T	Some corrections
Apr. 2023	JY997D50201 JY997D50202	U	Compatible with GT Works3 Version1.290C • The name of the communication driver for Ethernet connection to ALLEN-BRADLEY PLC has been changed.

This manual confers no industrial property rights or any rights of any other kind, nor does it confer any patent licenses.Mitsubishi Electric Corporation cannot be held responsible for any problems involving industrial property rights which may occur as a result of using the contents noted in this manual.

© 2013 MITSUBISHI ELECTRIC CORPORATION

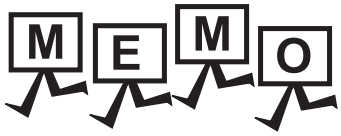
MEMO

WARRANTY

Please check the following product warranty details before using this product.

■1. Gratis Warranty Term and Gratis Warranty Range

If any faults or defects (hereinafter "Failure") found to be the responsibility of Mitsubishi occurs during use of the product within the gratis warranty term, the product shall be repaired at no cost via the sales representative or Mitsubishi Service Company.
However, if repairs are required onsite at domestic or overseas location, expenses to send an engineer will be solely at the customer's discretion.
Mitsubishi shall not be held responsible for any re-commissioning, maintenance, or testing on-site that involves replacement of the failed module.

(1) Gratis Warranty Term

The gratis warranty term of the product shall be for thirty-six (36) months after the date of purchase or delivery to a designated place.
Note that after manufacture and shipment from Mitsubishi, the maximum distribution period shall be six (6) months, and the longest gratis warranty term after manufacturing shall be forty-two (42) months.
The gratis warranty term of repair parts shall not exceed the gratis warranty term before repairs.

(2) Gratis Warranty Range

(a) The customer shall be responsible for the primary failure diagnosis unless otherwise specified.
If requested by the customer, Mitsubishi Electric Corporation or its representative firm may carry out the primary failure diagnosis at the customer's expense.
The primary failure diagnosis will, however, be free of charge should the cause of failure be attributable to Mitsubishi Electric Corporation.

(b) The range shall be limited to normal use within the usage state, usage methods, and usage environment, etc., which follow the conditions and precautions, etc., given in the instruction manual, user's manual and caution labels on the product.

(c) Even within the gratis warranty term, repairs shall be charged in the following cases.
- Failure occurring from inappropriate storage or handling, carelessness or negligence by the user. Failure caused by the user's hardware or software design.
- Failure caused by unapproved modifications, etc., to the product by the user.
- When the Mitsubishi product is assembled into a user's device, Failure that could have been avoided if functions or structures, judged as necessary in the legal safety measures the user's device is subject to or as necessary by industry standards, had been provided.
- Failure that could have been avoided if consumable parts designated in the instruction manual had been correctly serviced or replaced.
- Replacing consumable parts such as a battery, backlight, and fuse.
- Failure caused by external irresistible forces such as fires or abnormal voltages, and Failure caused by force majeure such as earthquakes, lightning, wind and water damage.
- Failure caused by reasons that could not be predicted by scientific technology standards at the time of shipment from Mitsubishi.
- Any other failure found not to be the responsibility of Mitsubishi or that admitted not to be so by the user.

■2. Onerous repair term after discontinuation of production

(1) Mitsubishi shall accept onerous product repairs for seven (7) years after production of the product is discontinued.
Discontinuation of production shall be notified with Mitsubishi Technical Bulletins, etc.

(2) Mitsubishi shall not accept a request for product supply (including spare parts) after production is discontinued.

■3. Overseas service

Overseas, repairs shall be accepted by Mitsubishi's local overseas FA Center.
Note that the repair conditions at each FA Center may differ.

■4. Exclusion of loss in opportunity and secondary loss from warranty liability

Regardless of the gratis warranty term, Mitsubishi shall not be liable for compensation to:

(1) Damages caused by any cause found not to be the responsibility of Mitsubishi.

(2) Loss in opportunity, lost profits incurred to the user by Failures of Mitsubishi products.

(3) Special damages and secondary damages whether foreseeable or not, compensation for accidents, and compensation for damages to products other than Mitsubishi products.

(4) Replacement by the user, maintenance of on-site equipment, start-up test run and other tasks.

■5. Changes in product specifications

The specifications given in the catalogs, manuals, or technical documents are subject to change without prior notice.

■6. Product application

(1) In using the Mitsubishi graphic operation terminal, the usage conditions shall be that the application will not lead to a major accident even if any problem or fault should occur in the graphic operation terminal device, and that backup and fail-safe functions are systematically provided outside of the device for any problem or fault.

(2) The Mitsubishi graphic operation terminal has been designed and manufactured for applications in general industries, etc.
Thus, applications in which the public could be affected such as in nuclear power plants and other power plants operated by respective power companies, and applications in which a special quality assurance system is required, such as for Railway companies or Public service shall be excluded from the graphic operation terminal applications.
In addition, applications in which human life or property could be greatly affected, such as in aircraft, medical, railway applications, incineration and fuel devices, manned transportation equipment, recreation and amusement devices, safety devices, shall also be excluded from the graphic operation terminal.
Even for the above applications, however, Mitsubishi Electric Corporation may consider the possibility of an application, provided that the customer notifies Mitsubishi Electric Corporation of the intention, the application is clearly defined and any special quality is not required, after the user consults the local Mitsubishi representative.

Intellectual Property Rights

■ Trademarks

GOT is a registered trademark of Mitsubishi Electric Corporation.
Microsoft, Windows, Windows NT, Windows Server, Windows Vista, and Windows 7 are registered trademarks or trademarks of Microsoft Corporation in the United States and other countries.
Adobe and Adobe Reader are registered trademarks of Adobe Systems Incorporated.
Pentium and Celeron are a registered trademarks of Intel Corporation in the United States and other countries.
MODBUS is a trademark of Schneider Electric SA.
VNC is a registered trademark of RealVNC Ltd. in the United States and other countries.
Other company and product names herein are either trademarks or registered trademarks of their respective owners.

■ Copyrights

The screens (screenshots) are used in accordance with the Microsoft Corporation guideline.

GRAPHIC OPERATION TERMINAL

GOT1000

GT14 Handy GOT User's Manual 2/2

■Connection(2/2)
(NON-MITSUBISHI PRODUCT, MICROCOMPUTER CONNECTION, MODBUS CONNECTION, VNC(R) SERVER CONNECTION)

MODEL	GT14HS-U-E
MODEL CODE	_____
JY997D50202U	

MITSUBISHI ELECTRIC CORPORATION

HEAD OFFICE: TOKYO BLDG., 2-7-3, MARUNOUCHI, CHIYODA-KU, TOKYO 100-8310, JAPAN
NAGOYA WORKS: 1-14, YADA-MINAMI 5-CHOME, HIGASHI-KU, NAGOYA 461-8670, JAPAN

When exported from Japan, this manual does not require application to the Ministry of Economy, Trade and Industry for service transaction permission.

Specifications subject to change without notice.