MITSUBISHI ELECTRIC

Mitsubishi Electric AC Servo System

MITSUBISHI ELECTRIC SERVO SYSTEM MELSERVO-J5

MR-J5
User's Manual
(Hardware)

-MR-J5-_G_
-MR-J5W_-_G_
-MR-J5-_G_-_N1
-MR-J5W_-_G-_N1
-MR-J5-_B_
-MR-J5W_-_B_
-MR-J5-_A_

SAFETY INSTRUCTIONS

Please read the instructions carefully before using the equipment.

To use the equipment correctly, do not attempt to install, operate, maintain, or inspect the equipment until you have read through this manual, installation guide, and appended documents carefully. Do not use the equipment until you have a full knowledge of the equipment, safety information and instructions.

In this manual, the safety instruction levels are classified into "WARNING" and "CAUTION".

⚠ **WARNING**	Indicates that incorrect handling may cause hazardous conditions, resulting in death or severe injury.
⚠ **CAUTION**	Indicates that incorrect handling may cause hazardous conditions, resulting in medium or slight injury.

Note that the CAUTION level may lead to a serious consequence depending on conditions.

Please follow the instructions of both levels because they are important to personnel safety.

Forbidden actions and required actions are indicated by the following diagrammatic symbols.

⃠	Indicates a forbidden action. For example, "No Fire" is indicated by .
●	Indicates a required action. For example, grounding is indicated by .

In this manual, precautions for hazards that can lead to property damage, instructions for other functions, and other information are shown separately in the "Point" area.

After reading this manual, keep it accessible to the operator.

[Installation/wiring]

⚠WARNING

- To prevent an electric shock, turn off the power and wait for 15 minutes or more before starting wiring and/or inspection.
- To prevent an electric shock, ground the servo amplifier.
- To prevent an electric shock, any person who is involved in wiring should be fully competent to do the work.
- To prevent an electric shock, mount the servo amplifier before wiring.
- To prevent an electric shock, connect the protective earth (PE) terminal of the servo amplifier to the protective earth (PE) of the cabinet, then connect the grounding lead wire to the ground.
- To prevent an electric shock, do not touch the conductive parts.

[Setting/adjustment]

⚠WARNING

- To prevent an electric shock, do not operate the switches with wet hands.

[Operation]

⚠WARNING

- To prevent an electric shock, do not operate the switches with wet hands.

[Maintenance]

⚠WARNING

- To prevent an electric shock, any person who is involved in inspection should be fully competent to do the work.
- To prevent an electric shock, do not operate the switches with wet hands.

ABOUT THE MANUAL

Point

e-Manuals are Mitsubishi Electric FA electronic book manuals that can be browsed with a dedicated tool.
e-Manuals enable the following:

- Searching for desired information in multiple manuals at the same time (manual cross searching)
- Jumping from a link in a manual to another manual for reference
- Browsing for hardware specifications by scrolling over the components shown in product illustrations
- Bookmarking frequently referenced information
- Copying sample programs to engineering tools

If using the servo for the first time, prepare and use the following related manuals to ensure that the servo is used safely. For the related manuals, refer to the User's Manual (Introduction).

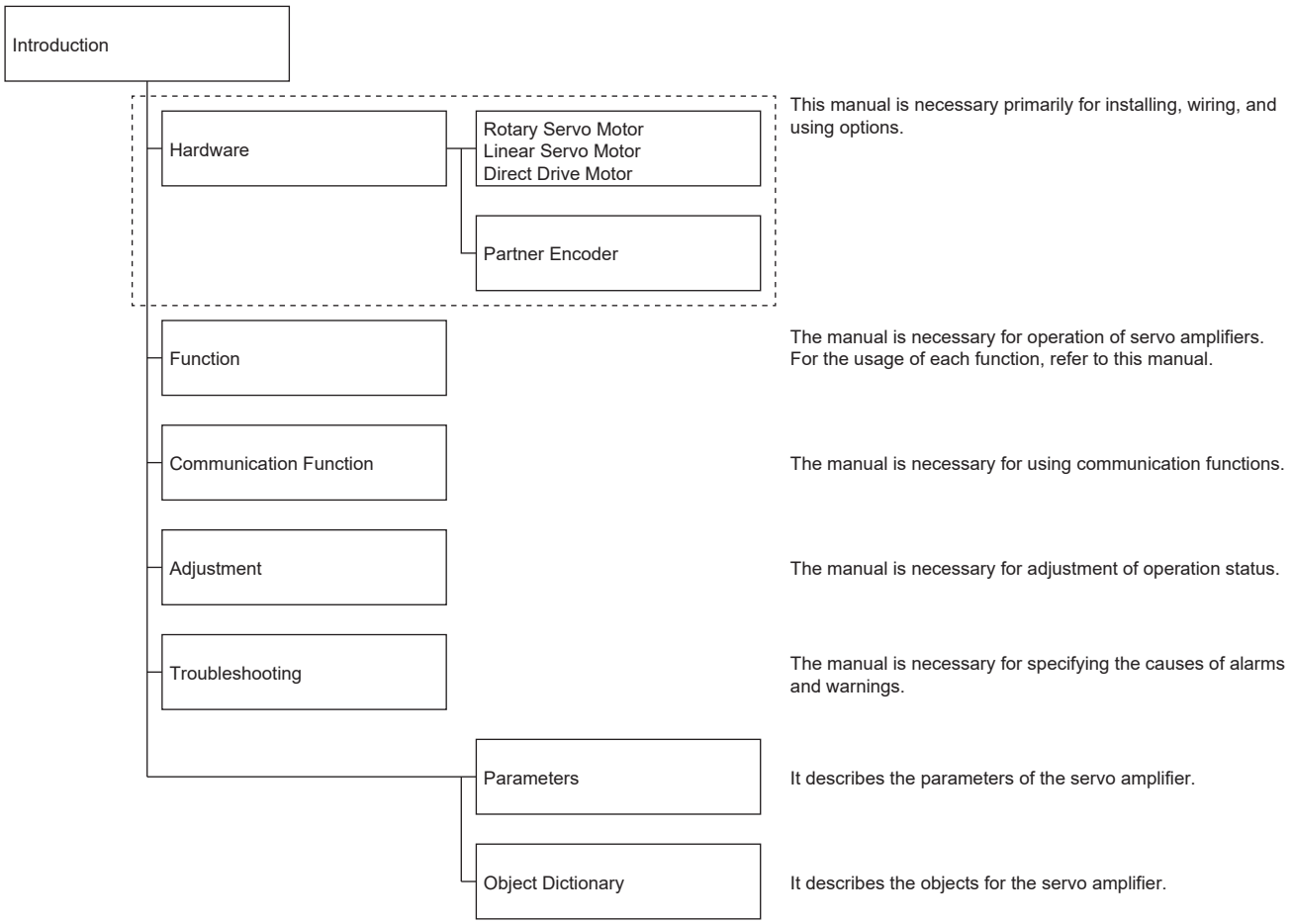

This manual covers the following servo amplifiers.

- MR-J5-_G_/MR-J5W_-_G_/MR-J5-_B_/MR-J5W_-_B_/MR-J5-_A_

In this manual, the servo amplifier names are abbreviated as shown below.

Symbol	Servo amplifier
[G]	MR-J5-_G_/MR-J5W_-_G_
[B]	MR-J5-_B_/MR-J5W_-_B_
[A]	MR-J5-_A_

Global standards and regulations

Compliance with the indicated global standards and regulations is current as of the release date of this manual. Some standards and regulations may have been modified or withdrawn.

CABLES USED FOR WIRING

Cables mentioned in this manual are selected based on an ambient temperature of 40 °C.

U.S. CUSTOMARY UNITS

U.S. customary units are not shown in this manual. Convert the values if necessary according to the following table.

Quantity	SI (metric) unit	U.S. customary unit
Mass	1 [kg]	2.2046 [lb]
Length	1 [mm]	0.03937 [inch]
Torque	1 [N•m]	141.6 [oz•inch]
Moment of inertia	1 [(× 10^{-4} kg•m^2)]	5.4675 [oz•$inch^2$]
Load (thrust load/axial load)	1 [N]	0.2248 [lbf]
Temperature	N [°C] × 9/5 + 32	N [°F]

CONTENTS

SAFETY INSTRUCTIONS . . . 1
ABOUT THE MANUAL . . . 3
CABLES USED FOR WIRING . . . 4
U.S. CUSTOMARY UNITS . . . 4

CHAPTER 1 INTRODUCTION 13

1.1 Wiring procedure . . . 13
1.2 Servo amplifier/motor combinations . . . 14
Rotary servo motor . . . 14
Geared servo motor . . . 19
Linear servo motor . . . 21
Direct drive motor . . . 26
1.3 Wiring check . . . 28
Power supply system wiring . . . 28
I/O signal wiring . . . 30
1.4 Surrounding environment . . . 31

CHAPTER 2 INSTALLATION 32

2.1 Mounting direction and clearances . . . 33
2.2 Keeping out foreign materials . . . 36
2.3 Cable stress . . . 36
2.4 SSCNET III cable laying [B] . . . 37
2.5 Fan unit replacement procedure . . . 39
List of applicable fan units . . . 39
Fan unit removal procedure . . . 40
Fan unit installation procedure . . . 41
2.6 Restrictions when using this product at an altitude exceeding 1000 m and up to 2000 m . . . 42

CHAPTER 3 SIGNALS AND WIRING 43

3.1 Example power circuit connections . . . 44
200 V class . . . 44
400 V class . . . 48
Using servo amplifier with DC power supply input . . . 51
3.2 Example I/O signal connections . . . 53
MR-J5-_G_ (excluding MR-J5-_G_-HS_) . . . 53
MR-J5-_G_-HS_ . . . 56
MR-J5W_-_G_ . . . 59
MR-J5-_B_ . . . 62
MR-J5W_-_B_ . . . 65
MR-J5-_A_ . . . 68
3.3 Explanation of power supply system . . . 76
Explanation of signals . . . 76
Power-on procedure [G] [B] . . . 78
Power-on procedure [A] . . . 79
Wiring CNP1, CNP2, and CNP3 . . . 80
3.4 Connectors and pin assignments . . . 87
Precautions . . . 87
Connectors and pin assignments [G] . . . 88

Connectors and pin assignments [B] . . . 93
Connectors and pin assignments [A] . . . 95
3.5 Signal (device) explanation . . . 98
Input device . . . 98
Output device . . . 108
Input signal . . . 115
Output signal . . . 117
Power supply . . . 119
3.6 Interface . . . 120
Internal connection diagram [G] . . . 120
Internal connection diagram [B] . . . 126
Internal connection diagram [A] . . . 130
Detailed explanation of interfaces . . . 133
Source I/O interface . . . 137
3.7 Servo motor with an electromagnetic brake . . . 139
Connection diagram . . . 139
3.8 SSCNET III cable connection [B] . . . 141
3.9 Grounding . . . 143

CHAPTER 4 DIMENSIONS 144

4.1 MR-J5-_G_ . . . 144
200 V class . . . 144
400 V class . . . 147
4.2 MR-J5W_-_G_ . . . 150
4.3 MR-J5-_B_ . . . 152
200 V class . . . 152
400 V class . . . 155
4.4 MR-J5W_-_B_ . . . 157
4.5 MR-J5-_A_ . . . 159
200 V class . . . 159
400 V class . . . 162
4.6 Connector . . . 164
MR-J5_-_G_ . . . 164
MR-J5_-_B_ . . . 168
MR-J5-_A_ . . . 169

CHAPTER 5 CHARACTERISTICS 170

5.1 Overload protection characteristics . . . 170
5.2 Power supply capacity and generated loss . . . 173
Power supply capacity . . . 173
Generated loss . . . 184
Using servo amplifier with DC power supply input . . . 186
5.3 Dynamic brake characteristics . . . 187
Dynamic brake operation . . . 188
5.4 Cable flex life . . . 251
5.5 Inrush currents at power-on of main circuit and control circuit . . . 252

CHAPTER 6 OPTIONS AND PERIPHERAL EQUIPMENT 253

6.1 Cables/connector sets . . . 253
Combinations of cables/connector sets . . . 254

MR-D05UDL3M-B STO cable . . . 264
MR-AHSCN7CBL2M10M Output cable for analog monitor and A/B/Z-phase pulse [G] . . . 265
Ethernet cable [G] . . . 266
SSCNET III cable [B] . . . 267
6.2 Regenerative option . . . 269
Combination and regenerative power . . . 269
Selection of the regenerative option (1-axis servo amplifier) . . . 271
Selection of the regenerative option (multi-axis servo amplifier) . . . 274
Servo parameter setting . . . 278
Connection of regenerative option . . . 278
Mounting direction . . . 279
Dimensions . . . 280
6.3 MR-CM simple converter . . . 285
Combination of simple converter and servo amplifier . . . 285
Servo amplifier setting when using a simple converter . . . 285
Simple converter standard specifications . . . 285
External interface . . . 287
Signals and wiring . . . 290
Dimensions . . . 292
Peripheral equipment . . . 293
Mounting direction and clearances . . . 294
6.4 Multifunction regeneration converter (FR-XC-(H)) . . . 295
Precautions . . . 295
Servo amplifier settings . . . 295
Capacity selection . . . 295
Connection diagram . . . 298
Wiring and peripheral options . . . 300
6.5 PS7DW-20V14B-F junction terminal block (recommended) (1-axis servo amplifier) [G] [B] . . . 304
6.6 MR-TB26A junction terminal block (multi-axis servo amplifier) [G] [B] . . . 306
6.7 MR-TB50 junction terminal block [A] . . . 308
6.8 MR Configurator2 . . . 310
Engineering tool . . . 310
Precautions for using USB communication function and Ethernet communication function . . . 310
6.9 Battery . . . 311
Selection of battery . . . 311
MR-BAT6V1SET battery . . . 312
MR-BAT6V1SET-A battery . . . 315
MR-BT6VCASE battery case . . . 318
MR-BAT6V1 battery . . . 324
Battery cable and junction battery cable . . . 325
6.10 Selection example of wires . . . 326
6.11 Molded-case circuit breakers, fuses, magnetic contactors . . . 329
Selection example . . . 329
Main circuit wiring (connecting multiple servo amplifiers to one molded-case circuit breaker) . . . 335
Example settings that comply with IEC/EN/UL 61800-5-1 and CSA C22.2 No.274 . . . 338
6.12 Power factor improving DC reactor . . . 341
6.13 Power factor improving AC reactor . . . 348
6.14 Relay (recommended) . . . 353
6.15 Noise reduction techniques . . . 354
Noise reduction techniques . . . 354
Noise reduction products . . . 358

6.16 Earth-leakage current breaker . . . 362
Selection method . . . 362
Selection example . . . 365
6.17 EMC filter (recommended) . . . 367
6.18 MR-J3-D05 safety logic unit . . . 373
Contents of the package . . . 373
Terms related to safety . . . 373
Precautions . . . 374
Residual risks . . . 374
Block diagram and timing chart . . . 375
Maintenance and disposal . . . 375
Functions and configuration . . . 376
Signal . . . 379
LED display . . . 386
Rotary switch settings . . . 387
Troubleshooting . . . 387
Dimensions . . . 388
Installation . . . 389
Combinations of cables and connectors . . . 390
6.19 J5-CHP07-10P cabinet-mounting attachment . . . 391
Compatible models . . . 391
Dimensions . . . 391
View when installed . . . 391
Fitting method . . . 392
Components . . . 393
Installation dimensions . . . 393
6.20 J5-CHP08 grounding terminal attachment . . . 398
Compatible models . . . 398
Restrictions . . . 398
Appearance and dimensions . . . 398
View when installed . . . 399
Components . . . 400
Installation dimensions . . . 400
6.21 MR-ASCHP06 shield clamp attachment . . . 405
Compatible models . . . 405
Appearance and dimensions . . . 405
Cable connection method . . . 406
View when installed . . . 407
Components . . . 408
Installation dimensions . . . 408
6.22 Cables manufactured by Mitsubishi Electric System & Service Co., Ltd. . . . 409
SSCNET III cable [B] . . . 409
6.23 SCC 15-F Shield connection clamp . . . 410
Compatible models . . . 410
Applicable wire diameter . . . 410
Cable connection method . . . 410
View when installed . . . 411

CHAPTER 7 ABSOLUTE POSITION DETECTION SYSTEM 412

7.1 Outline . . . 412

Characteristics . . . 412
Restrictions [G] . . . 412
Restrictions [B] . . . 412
Restrictions [A] . . . 412
Precautions [G] [A] . . . 413
Precautions [B] . . . 413
Configuration . . . 414
Servo parameter setting [G] . . . 414
Servo parameter setting [B] . . . 414
Servo parameter setting [A] . . . 414
Homing [G] [A] . . . 415
Homing [B] . . . 415
Checking the detected absolute position data . . . 415
Procedure of replacing a servo motor with battery-less absolute position encoder . . . 417
Procedure of replacing a servo amplifier without losing the absolute position data [B] . . . 418
7.2 Configuration and specifications . . . 419
Connecting the battery-less encoder . . . 419
Connecting the battery backup type absolute position encoder . . . 421
7.3 Absolute position detection system by DIO [A] . . . 425
Standard connection example . . . 425
Signal explanation . . . 426
Startup procedure . . . 427
Absolute position data transfer protocol . . . 428
Absolute position data transfer errors . . . 441
7.4 Absolute position detection system via communication [A] . . . 443
Serial communication command . . . 443
Absolute position data transfer protocol . . . 444

CHAPTER 8 USING STO FUNCTION 447

8.1 Introduction . . . 447
Outline . . . 447
Terms related to safety . . . 447
Precautions . . . 447
Residual risks of the STO function . . . 448
Specifications . . . 448
Maintenance . . . 449
8.2 Functional safety I/O signal connector (CN8) and pin assignments . . . 450
Pin assignment . . . 450
Signal (device) explanation . . . 450
How to pull out the STO cable . . . 451
8.3 Connection example . . . 452
Precautions for compliance with stop category 1 (IEC/EN 60204-1) . . . 452
Precautions for compliance with stop category 0 (IEC/EN 60204-1) . . . 452
Connection example for CN8 connector . . . 453
External I/O signal connection example using the MR-J3-D05 safety logic unit . . . 453
External I/O signal connection example using an external safety relay unit . . . 456
8.4 Detailed explanation of interfaces . . . 458
Sink I/O interface . . . 458
Source I/O interface . . . 460

CHAPTER 9 USING FUNCTIONAL SAFETY [G] (EXCULUDING MR-J5-_G_-HS_) 461

9.1 Introduction . . . 461
9.2 Function Block Diagram . . . 462
Safety sub-function control by input device . . . 462
Safety sub-function control by network . . . 463
9.3 System configuration . . . 464
Safety sub-function control by input device . . . 464
Safety sub-function control by network . . . 465
9.4 Specifications . . . 466
9.5 Connectors and pin assignments . . . 466
9.6 Example I/O signal connections . . . 467
Input signal . . . 467
Output signal . . . 468
9.7 Connecting I/O interfaces . . . 469
Source input . . . 469
Sink input . . . 469
9.8 Wiring the SBC output . . . 470
9.9 Noise reduction techniques . . . 471
9.10 Example of connection with other devices . . . 472
Safety sub-function control by input device . . . 472
Safety sub-function control by network . . . 473

CHAPTER 10 USING FUNCTIONAL SAFETY [G] (MR-J5-_G_-HS_) 474

10.1 Introduction . . . 474
10.2 Function block diagram . . . 475
Safety sub-function control by input device . . . 475
Safety sub-function control by network . . . 476
10.3 System configuration . . . 477
Safety sub-function control by input device . . . 477
Safety sub-function control by network . . . 477
10.4 Specifications . . . 478
10.5 Connectors and pin assignments . . . 478
10.6 Example I/O signal connections . . . 479
Input signal . . . 479
Output signal . . . 481
10.7 Connecting safety I/O interfaces . . . 483
Source input . . . 483
Sink input . . . 485
Source output . . . 487
Source/sink output . . . 488
10.8 Wiring the SBC output . . . 489
Using SDO1_ and SDO2_ for SBCS . . . 489
Using SDO3_ for SBCS . . . 489
10.9 Noise reduction techniques . . . 490
10.10 Example of connection with other devices . . . 491
Safety sub-function control by input device . . . 491
Safety sub-function control by network . . . 492

CHAPTER 11 USING A LINEAR SERVO MOTOR 493

11.1 Functions and configuration . . . 493

Outline . . . 493
Configuration including peripheral equipment . . . 494
11.2 Startup [G] [B] . . . 496
Startup procedure . . . 496
Setting . . . 497
Magnetic pole detection . . . 499
How to replace servo amplifier without magnetic pole detection . . . 507
11.3 Startup [A] . . . 508
Startup procedure . . . 508
Setting . . . 509
Magnetic pole detection . . . 511
How to replace servo amplifier without magnetic pole detection . . . 518
11.4 Basic functions . . . 519
Operation from controller . . . 519
Homing [G] . . . 519
Homing [B] . . . 524
Homing [A] . . . 529
Linear servo control error detection function . . . 535
About MR Configurator2 . . . 537
11.5 Adjustment . . . 539
Auto tuning function . . . 539
Machine analyzer function . . . 539
11.6 Characteristics . . . 540
Overload protection characteristics . . . 540
Power supply capacity and generated loss (1-axis servo amplifier) . . . 546
Power supply capacity and generated loss (multi-axis servo amplifier) . . . 547
Dynamic brake characteristics . . . 550
Permissible load to motor mass ratio when the dynamic brake is used . . . 551
11.7 Absolute position detection system . . . 552

CHAPTER 12 USING A DIRECT DRIVE MOTOR 553

12.1 Functions and configuration . . . 553
Outline . . . 553
Configuration including peripheral equipment . . . 554
12.2 Startup [G] [B] . . . 555
Startup procedure . . . 556
Magnetic pole detection . . . 557
12.3 Startup [A] . . . 564
Startup procedure . . . 565
Magnetic pole detection . . . 566
12.4 Basic functions . . . 574
Operation from controller . . . 574
Servo control error detection function . . . 574
12.5 Characteristics . . . 577
Overload protection characteristics . . . 577
Power supply capacity and generated loss (1-axis servo amplifier) . . . 579
Power supply capacity and generated loss (multi-axis servo amplifier) . . . 580
Dynamic brake characteristics . . . 582
Permissible load to motor inertia ratio when the dynamic brake is used . . . 584
12.6 Absolute position detection system [G] [B] . . . 584

12.7 Absolute position detection system [A] . . . 584

CHAPTER 13 USING A FULLY CLOSED LOOP SYSTEM 586

13.1 Precautions . . . 586
13.2 Functions and configuration . . . 587
Outline . . . 587
Function block diagram . . . 588
Operation mode and load-side encoder combinations [G] [A] . . . 590
Operation mode and load-side encoder combinations [B] . . . 590
System configuration . . . 591
13.3 Signals and wiring . . . 593
Encoder cable configuration diagram . . . 593
13.4 Startup . . . 595
Servo parameter setting . . . 595
Checking position data of the load-side encoder . . . 603
13.5 Basic functions . . . 604
Homing [G] [A] . . . 604
Homing [B] . . . 608
Operation from controller . . . 611
Fully closed loop control error detection function . . . 611
About MR Configurator2 . . . 613
13.6 Options and peripheral equipment . . . 615
MR-J4FCCBL03M branch cable . . . 615
13.7 Absolute position detection system . . . 616
REVISIONS . . . 617
WARRANTY . . . 619
TRADEMARKS . . . 620

1 INTRODUCTION

1.1 Wiring procedure

Procedure	Description	Reference
1. Installation	Install a servo amplifier.	☞ Page 32 INSTALLATION
2. Connecting the power circuit	Connect the power circuit.	☞ Page 44 Example power circuit connections
3. Connecting I/O signals	Connect I/O signals.	☞ Page 53 Example I/O signal connections
4. Connecting to the servo motor	Connect the servo amplifier to a servo motor. If using a linear servo motor, connect the servo amplifier to a linear encoder. If using the servo amplifier in a fully closed loop system, connect the servo amplifier to a linear encoder or a rotary encoder.	📖Rotary Servo Motor User's Manual (For MR-J5) ☞ Page 493 USING A LINEAR SERVO MOTOR ☞ Page 553 USING A DIRECT DRIVE MOTOR ☞ Page 586 USING A FULLY CLOSED LOOP SYSTEM
5. Connecting options	Connect options.	☞ Page 253 OPTIONS AND PERIPHERAL EQUIPMENT
6. Other precautions	If using the absolute position detection system and functional safety, perform wiring and settings as necessary.	☞ Page 412 ABSOLUTE POSITION DETECTION SYSTEM ☞ Page 447 USING STO FUNCTION ☞ Page 461 USING FUNCTIONAL SAFETY [G] (EXCULUDING MR-J5-_G_-HS_)
7. Wiring check	Check that the servo amplifier and the servo motor are wired correctly by visually inspecting them or by using a method such as the DO forced output function.	☞ Page 28 Wiring check
8. Checking the surrounding environment	Check the environment surrounding the servo amplifier and servo motor.	☞ Page 31 Surrounding environment

1.2 Servo amplifier/motor combinations

By combining a servo motor with a larger capacity servo amplifier, the maximum torque can be increased to 400 % or 450 %.

Rotary servo motor

HK-KT series

Point

Refer to the following for the combinations of the geared servo motors and servo amplifiers.

☞ Page 19 HK-KT series

■200 V class servo amplifier

• 1-axis servo amplifier

○: Standard torque ◎: Torque increased

Rotary servo motor			Servo amplifier MR-J5-_							
			10_	20_	40_	60_	70_	100_	200_	350_
HK-KT_W	□40	HK-KT053W	○	◎	◎	—	—	—	—	—
		HK-KT13W	○	◎	◎	—	—	—	—	—
		HK-KT1M3W	—	○	◎	◎	—	—	—	—
	□60	HK-KT13UW	○	◎	◎	—	—	—	—	—
		HK-KT23W	—	○	◎	◎	—	—	—	—
		HK-KT43W	—	—	○	○	◎	—	—	—
		HK-KT63W	—	—	—	—	○	○	◎	—
	□80	HK-KT23UW	—	○	◎	◎	—	—	—	—
		HK-KT43UW	—	—	○	○	◎	—	—	—
		HK-KT7M3W	—	—	—	—	○	○	◎	—
		HK-KT103W	—	—	—	—	—	○	◎	◎
	□90	HK-KT63UW	—	—	—	○	◎	◎	—	—
		HK-KT7M3UW	—	—	—	—	○	○	◎	—
		HK-KT103UW	—	—	—	—	—	○	◎	◎
		HK-KT153W	—	—	—	—	—	—	○	◎
		HK-KT203W	—	—	—	—	—	—	○	◎
		HK-KT202W	—	—	—	—	—	—	○	◎
HK-KT_4_W	□60	HK-KT434W	—	○	◎	◎	—	—	—	—
		HK-KT634W	—	—	○	○	◎	—	—	—
	□80	HK-KT7M34W	—	—	○	○	◎	—	—	—
		HK-KT1034W	—	—	—	○	◎	◎	—	—
	□90	HK-KT1534W	—	—	—	—	○	○	◎	—
		HK-KT2034W	—	—	—	—	—	○	◎	◎
		HK-KT2024W	—	—	—	—	—	○	○	○

• Multi-axis servo amplifier

Point

As long as the servo motor is compatible with the servo amplifier, any combination of the following is possible: servo motor series, capacity, rotary servo motor, linear servo motor, and direct drive motor.

○: Standard torque ◎: Torque increased

Rotary servo motor			Servo amplifier MR-J5W2-_				Servo amplifier MR-J5W3-_	
			22_	44_	77_	1010_	222_	444_
HK-KT_W	□40	HK-KT053W	◎	◎	—	—	◎	◎
		HK-KT13W	◎	◎	—	—	◎	◎
		HK-KT1M3W	○	◎	—	—	○	◎
	□60	HK-KT13UW	◎	◎	—	—	◎	◎
		HK-KT23W	○	◎	—	—	○	◎
		HK-KT43W	—	○	◎	◎	—	○
		HK-KT63W	—	—	○	○	—	—
	□80	HK-KT23UW	○	◎	—	—	○	◎
		HK-KT43UW	—	○	◎	◎	—	○
		HK-KT7M3W	—	—	○	○	—	—
		HK-KT103W	—	—	—	○	—	—
	□90	HK-KT63UW	—	—	◎	◎	—	—
		HK-KT7M3UW	—	—	○	○	—	—
		HK-KT103UW	—	—	—	○	—	—
HK-KT_4_W	□60	HK-KT434W	○	◎	—	—	○	◎
		HK-KT634W	—	○	◎	◎	—	○
	□80	HK-KT7M34W	—	○	◎	◎	—	○
		HK-KT1034W	—	—	◎	◎	—	—
	□90	HK-KT1534W	—	—	○	○	—	—
		HK-KT2034W	—	—	—	○	—	—
		HK-KT2024W	—	—	—	○	—	—

■400 V class servo amplifier

• 1-axis servo amplifier

○: Standard torque ◎: Torque increased

Rotary servo motor			Servo amplifier MR-J5-_			
			60_4_	100_4_	200_4_	350_4_
HK-KT_W	□40	HK-KT053W *1	○	◎	—	—
		HK-KT13W *1	○	◎	—	—
		HK-KT1M3W *1	○	◎	—	—
HK-KT_4_W	□60	HK-KT434W *1	○	◎	◎	—
		HK-KT634W *1	—	○	◎	◎
	□80	HK-KT7M34W *1	—	○	◎	◎
		HK-KT1034W *1	—	○	◎	◎
	□90	HK-KT634UW	○	◎	◎	—
		HK-KT1034UW	—	○	◎	◎
		HK-KT1534W *1	—	—	○	◎
		HK-KT2034W *1	—	—	○	◎
		HK-KT2024W *1	—	—	○	◎

*1 Use rotary servo motors manufactured in September 2020 or later. Otherwise, an alarm occurs.

HK-MT series

Use servo amplifiers with firmware version C2 or later. Otherwise, [AL. 01A Servo motor combination error] occurs.

■200 V class servo amplifier

• 1-axis servo amplifier

○: Standard torque ◎: Torque increased

Rotary servo motor			Servo amplifier MR-J5-_							
			10_	20_	40_	60_	70_	100_	200_	350_
HK-MT_W	□40	HK-MT053W	○	◎	◎	—	—	—	—	—
		HK-MT13W	○	◎	◎	—	—	—	—	—
		HK-MT1M3W	—	○	◎	—	—	—	—	—
	□60	HK-MT23W	—	○	◎	—	—	—	—	—
		HK-MT43W	—	—	○	—	◎	—	—	—
		HK-MT63W	—	—	—	—	○	—	◎	—
	□80	HK-MT7M3W	—	—	—	—	○	—	◎	—
		HK-MT103W	—	—	—	—	—	○	◎	—
HK-MT_VW	□40	HK-MT053VW	○	◎	◎	—	—	—	—	—
		HK-MT13VW	○	◎	◎	—	—	—	—	—
		HK-MT1M3VW	—	○	◎	—	—	—	—	—
	□60	HK-MT23VW	—	○	◎	—	—	—	—	—
		HK-MT43VW	—	—	—	○	◎	—	—	—
		HK-MT63VW	—	—	—	—	○	—	◎	—
	□80	HK-MT7M3VW	—	—	—	—	○	—	◎	—
		HK-MT103VW	—	—	—	—	—	—	○	◎

• Multi-axis servo amplifier

Point

As long as the servo motor is compatible with the servo amplifier, any combination of the following is possible: servo motor series, capacity, rotary servo motor, linear servo motor, and direct drive motor.

○: Standard torque ◎: Torque increased

Rotary servo motor			Servo amplifier MR-J5W2-_				Servo amplifier MR-J5W3-_	
			22_	44_	77_	1010_	222_	444_
HK-MT_W	□40	HK-MT053W	◎	◎	—	—	◎	◎
		HK-MT13W	◎	◎	—	—	◎	◎
		HK-MT1M3W	○	◎	—	—	○	◎
	□60	HK-MT23W	○	◎	—	—	○	◎
		HK-MT43W	—	○	◎	◎	—	○
		HK-MT63W	—	—	○	○	—	—
	□80	HK-MT7M3W	—	—	○	○	—	—
		HK-MT103W	—	—	—	○	—	—
HK-MT_VW	□40	HK-MT053VW	◎	◎	—	—	◎	◎
		HK-MT13VW	◎	◎	—	—	◎	◎
		HK-MT1M3VW	○	◎	—	—	○	◎
	□60	HK-MT23VW	○	◎	—	—	○	◎
		HK-MT43VW	—	—	◎	◎	—	—
		HK-MT63VW	—	—	○	○	—	—
	□80	HK-MT7M3VW	—	—	○	○	—	—

HK-ST series

Point

Refer to the following for the combinations of the geared servo motors and servo amplifiers.

☞ Page 20 HK-ST series

■200 V class servo amplifier

• 1-axis servo amplifier

○: Standard torque ◎: Torque increased

Rotary servo motor			Servo amplifier MR-J5-_							
			40_	60_	70_	100_	200_	350_	500_	700_
HK-ST_W	□130	HK-ST52W	—	○	◎	◎	—	—	—	—
		HK-ST102W	—	—	—	○	◎	◎	—	—
		HK-ST172W	—	—	—	—	○	○	—	—
		HK-ST202AW	—	—	—	—	○	◎	—	—
		HK-ST302W	—	—	—	—	—	○	◎ *1	—
		HK-ST353W	—	—	—	—	—	○	◎	—
		HK-ST503W	—	—	—	—	—	—	○	◎
	□176	HK-ST7M2UW	—	—	○	○	◎	—	—	—
		HK-ST172UW	—	—	—	—	○	◎	—	—
		HK-ST202W	—	—	—	—	○	◎	—	—
		HK-ST352W	—	—	—	—	—	○	◎ *1	—
		HK-ST502W	—	—	—	—	—	—	○	◎
		HK-ST702W	—	—	—	—	—	—	—	○
HK-ST_4_W	□130	HK-ST524W	○	○	○	—	—	—	—	—
		HK-ST1024W	—	○	◎	◎	—	—	—	—
		HK-ST1724W	—	—	—	○	○	○	—	—
		HK-ST2024AW	—	—	—	○	○	○	—	—
		HK-ST3024W	—	—	—	—	○	○	—	—
	□176	HK-ST2024W	—	—	—	—	○	○	—	—
		HK-ST3524W	—	—	—	—	○	◎	—	—
		HK-ST5024W	—	—	—	—	—	○	○ *1	—
		HK-ST7024W	—	—	—	—	—	—	○	○

*1 Use rotary servo motors manufactured in December 2020 or later. Otherwise, an alarm occurs.

• Multi-axis servo amplifier

Point

As long as the servo motor is compatible with the servo amplifier, any combination of the following is possible: servo motor series, capacity, rotary servo motor, linear servo motor, and direct drive motor.

○: Standard torque ◎: Torque increased

Rotary servo motor			Servo amplifier MR-J5W2-_			Servo amplifier MR-J5W3-_
			44_	77_	1010_	444_
HK-ST_W	□130	HK-ST52W	—	◎	◎	—
		HK-ST102W	—	—	○	—
	□176	HK-ST7M2UW	—	○	○	—
HK-ST_4_W	□130	HK-ST524W	○	○	—	○
		HK-ST1024W	—	◎	◎	—
		HK-ST1724W	—	—	○	—
		HK-ST2024AW	—	—	○	—

■400 V class servo amplifier

○: Standard torque ◎: Torque increased

Rotary servo motor			Servo amplifier MR-J5-_					
			60_4_	100_4_	200_4_	350_4_	500_4	700_4
HK-ST_4_W	□130	HK-ST524W	○ *1	◎ *1	◎ *1	—	—	—
		HK-ST1024W	—	○ *1	◎ *1	◎ *1	—	—
		HK-ST1724W	—	—	○ *1	○ *1	○ *2	—
		HK-ST2024AW	—	—	○ *1	◎ *1	◎ *2	—
		HK-ST3024W	—	—	—	○ *1	◎ *2	◎ *2
		HK-ST3534W	—	—	—	○	◎	—
		HK-ST5034W	—	—	—	—	○	◎
	□176	HK-ST2024W	—	—	○ *1	◎ *1	◎ *2	—
		HK-ST3524W	—	—	—	○ *1	◎ *2	◎ *2
		HK-ST5024W	—	—	—	—	○ *2	◎ *2
		HK-ST7024W	—	—	—	—	—	○ *2

*1 Use servo motors manufactured in December 2020 or later. Otherwise, [AL. 01A Servo motor combination error] occurs.

*2 Use servo motors manufactured in April 2021 or later. Otherwise, [AL. 01A] occurs.

HK-RT series

■200 V class servo amplifier

○: Standard torque ◎: Torque increased

Rotary servo motor			Servo amplifier MR-J5-_					Servo amplifier MR-J5W2-_
			100_	200_	350_	500_	700_	1010G
HK-RT_W	□90	HK-RT103W	○ *2	◎	—	—	—	○
		HK-RT153W *1	—	○	—	◎	—	—
		HK-RT203W	—	○	◎	—	—	—
	□130	HK-RT353W	—	—	○	◎	—	—
		HK-RT503W	—	—	—	○	◎	—
		HK-RT703W	—	—	—	—	○	—

*1 The HK-RT153W cannot be driven with the MR-J5-350_.

*2 The dynamic brake time constant is longer than when the HG-RR103 and MR-J4-200_ are used in combination. To obtain the dynamic brake time constant equivalent to the combination of the HG-RR103 and MR-J4-200_, use the HK-RT103W and MR-J5-200_ in combination. For how to calculate the coasting distance, refer to the following page.

☞ Page 187 Dynamic brake characteristics

■400 V class servo amplifier

○: Standard torque ◎: Torque increased

Rotary servo motor			Servo amplifier MR-J5-_				
			100_4_	200_4_	350_4_	500_4	700_4
HK-RT_4W	□90	HK-RT1034W	○	◎	—	—	—
		HK-RT1534W	—	○	—	◎	—
		HK-RT2034W	—	○	◎	—	—
	□130	HK-RT3534W	—	—	○	◎	—
		HK-RT5034W	—	—	—	○	◎
		HK-RT7034W	—	—	—	—	○

Geared servo motor

HK-KT series

Point

The maximum torque of the geared servo motor does not increase even if in combination with a servo amplifier with a larger capacity.

■200 V class servo amplifier

• 1-axis servo amplifier

○: Standard torque

Rotary servo motor			Servo amplifier MR-J5-_						
			10_	20_	40_	60_	70_	100_	200_
HK-KT_G_	□40	HK-KT053_G_	○	○	○	—	—	—	—
		HK-KT13_G_	○	○	○	—	—	—	—
	□60	HK-KT23_G_	—	○	○	○	—	—	—
		HK-KT43_G_	—	—	○	○	○	—	—
	□80	HK-KT7M3_G_	—	—	—	—	○	○	○

• Multi-axis servo amplifier

Point

As long as the servo motor is compatible with the servo amplifier, any combination of the following is possible: servo motor series, capacity, rotary servo motor, linear servo motor, and direct drive motor.

○: Standard torque

Rotary servo motor			Servo amplifier MR-J5W2-_				Servo amplifier MR-J5W3-_	
			22_	44_	77_	1010_	222_	444_
HK-KT_G_	□40	HK-KT053_G_	○	○	—	—	○	○
		HK-KT13_G_	○	○	—	—	○	○
	□60	HK-KT23_G_	○	○	—	—	○	○
		HK-KT43_G_	—	○	○	○	—	○
	□80	HK-KT7M3_G_	—	—	○	○	—	—

HK-ST series

Point

The maximum torque of the geared servo motor does not increase even if in combination with a servo amplifier with a larger capacity.

■200 V class servo amplifier

• 1-axis servo amplifier

○: Standard torque

Rotary servo motor			Servo amplifier MR-J5-_							
			40_	60_	70_	100_	200_	350_	500_	700_
HK-ST_G_	□130	HK-ST52_G_	—	○	○	○	—	—	—	—
		HK-ST102_G_	—	—	—	○	○	○	—	—
		HK-ST152_G_	—	—	—	—	○	○	—	—
	□176	HK-ST202_G_	—	—	—	—	○	○	—	—
		HK-ST352_G_	—	—	—	—	—	○	○ *1	—
		HK-ST502_G_	—	—	—	—	—	—	○	○
		HK-ST702_G_	—	—	—	—	—	—	—	○

*1 Use rotary servo motors manufactured in December 2020 or later. Otherwise, an alarm occurs.

• Multi-axis servo amplifier

Point

As long as the servo motor is compatible with the servo amplifier, any combination of the following is possible: servo motor series, capacity, rotary servo motor, linear servo motor, and direct drive motor.

○: Standard torque

Rotary servo motor			Servo amplifier MR-J5W2-_	
			77_	1010_
HK-ST_G_	□130	HK-ST52_G_	○	○
		HK-ST102_G_	—	○

■400 V class servo amplifier

○: Standard torque

Rotary servo motor			Servo amplifier MR-J5-_					
			60_4_	100_4_	200_4_	350_4_	500_4	700_4
HK-ST_4_G_	□130	HK-ST524_G_	○ *1	○ *1	○ *1	—	—	—
		HK-ST1024_G_	—	○ *1	○ *1	○ *1	—	—
		HK-ST1524_G_	—	—	○ *1	○ *1	○ *2	—
	□176	HK-ST2024_G_	—	—	○ *1	○ *1	○ *2	—
		HK-ST3524_G_	—	—	—	○ *1	○ *2	○ *2
		HK-ST5024_G_	—	—	—	—	○ *2	○ *2
		HK-ST7024_G_	—	—	—	—	—	○ *2

*1 Use servo motors manufactured in December 2020 or later. Otherwise, [AL. 01A Servo motor combination error] occurs.

*2 Use servo motors manufactured in April 2021 or later. Otherwise, [AL. 01A] occurs.

Linear servo motor

Set [Pr. PA17] and [Pr. PA18.0-3] according to the linear servo motor to be used.
Linear servo motors cannot be used with 400 V class servo amplifiers.

LM-H3 series

■1-axis servo amplifier

Linear servo motor		Servo amplifier MR-J5-_			
Primary side (coil)	Secondary side (magnet)	40_	70_	200_	350_
LM-H3P2A-07P-BSS0	LM-H3S20-288-BSS0 LM-H3S20-384-BSS0 LM-H3S20-480-BSS0 LM-H3S20-768-BSS0	○	—	—	—
LM-H3P3A-12P-CSS0	LM-H3S30-288-CSS0 LM-H3S30-384-CSS0 LM-H3S30-480-CSS0 LM-H3S30-768-CSS0	○	—	—	—
LM-H3P3B-24P-CSS0		—	○	—	—
LM-H3P3C-36P-CSS0		—	○	—	—
LM-H3P3D-48P-CSS0		—	—	○	—
LM-H3P7A-24P-ASS0	LM-H3S70-288-ASS0 LM-H3S70-384-ASS0 LM-H3S70-480-ASS0 LM-H3S70-768-ASS0	—	○	—	—
LM-H3P7B-48P-ASS0		—	—	○	—
LM-H3P7C-72P-ASS0		—	—	○	—
LM-H3P7D-96P-ASS0		—	—	—	○

■Multi-axis servo amplifier

Point

As long as the servo motor is compatible with the servo amplifier, any combination of the following is possible: servo motor series, capacity, rotary servo motor, linear servo motor, and direct drive motor.

Linear servo motor		Servo amplifier MR-J5W2-_			Servo amplifier MR-J5W3-_
Primary side (coil)	Secondary side (magnet)	44_	77_	1010_	444_
LM-H3P2A-07P-BSS0	LM-H3S20-288-BSS0 LM-H3S20-384-BSS0 LM-H3S20-480-BSS0 LM-H3S20-768-BSS0	○	○	○	○
LM-H3P3A-12P-CSS0	LM-H3S30-288-CSS0 LM-H3S30-384-CSS0 LM-H3S30-480-CSS0 LM-H3S30-768-CSS0	○	○	○	○
LM-H3P3B-24P-CSS0		—	○	○	—
LM-H3P3C-36P-CSS0		—	○	○	—
LM-H3P3D-48P-CSS0		—	—	—	—
LM-H3P7A-24P-ASS0	LM-H3S70-288-ASS0 LM-H3S70-384-ASS0 LM-H3S70-480-ASS0 LM-H3S70-768-ASS0	—	○	○	—

LM-U2 series/LM-AU series

■1-axis servo amplifier

Linear servo motor		Servo amplifier MR-J5-_						
Primary side (coil)	Secondary side (magnet)	20_	40_	60_	70_	200_	350_	500_
LM-U2PAB-05M-0SS0	LM-U2SA0-240-0SS0 LM-U2SA0-300-0SS0 LM-U2SA0-420-0SS0	○	—	—	—	—	—	—
LM-U2PAD-10M-0SS0		—	○	—	—	—	—	—
LM-U2PAF-15M-0SS0		—	○	—	—	—	—	—
LM-U2PBB-07M-1SS0	LM-U2SB0-240-1SS1 LM-U2SB0-300-1SS1 LM-U2SB0-420-1SS1	○	—	—	—	—	—	—
LM-U2PBD-15M-1SS0		—	—	○	—	—	—	—
LM-U2PBF-22M-1SS0		—	—	—	○	—	—	—
LM-U2P2B-40M-2SS0	LM-U2S20-300-2SS1 LM-U2S20-480-2SS1	—	—	—	—	○	—	—
LM-U2P2C-60M-2SS0		—	—	—	—	—	○	—
LM-U2P2D-80M-2SS0		—	—	—	—	—	—	○

■Multi-axis servo amplifier

Point

As long as the servo motor is compatible with the servo amplifier, any combination of the following is possible: servo motor series, capacity, rotary servo motor, linear servo motor, and direct drive motor.

Linear servo motor		Servo amplifier MR-J5W2-_				Servo amplifier MR-J5W3-_	
Primary side (coil)	Secondary side (magnet)	22_	44_	77_	1010_	222_	444_
LM-U2PAB-05M-0SS0	LM-U2SA0-240-0SS0 LM-U2SA0-300-0SS0 LM-U2SA0-420-0SS0	○	○	—	—	○	○
LM-U2PAD-10M-0SS0		—	○	○	○	—	○
LM-U2PAF-15M-0SS0		—	○	○	○	—	○
LM-U2PBB-07M-1SS0	LM-U2SB0-240-1SS1 LM-U2SB0-300-1SS1 LM-U2SB0-420-1SS1	○	○	—	—	○	○
LM-U2PBD-15M-1SS0		—	—	○	○	—	—
LM-U2PBF-22M-1SS0		—	—	○	○	—	—

LM-F series

■1-axis servo amplifier

Linear servo motor		Servo amplifier MR-J5-_									
Primary side (coil)	Secondary side (magnet)	10_	20_	40_	60_	70_	100_	200_	350_	500_	700_
LM-FP2B-06M-1SS0	LM-FS20-480-1SS0 LM-FS20-576-1SS0	—	—	—	—	—	—	○	—	—	—
LM-FP2D-12M-1SS0		—	—	—	—	—	—	—	—	○	—
LM-FP2F-18M-1SS0		—	—	—	—	—	—	—	—	—	○
LM-FP4B-12M-1SS0	LM-FS40-480-1SS0 LM-FS40-576-1SS0	—	—	—	—	—	—	—	—	○	—
LM-FP4D-24M-1SS0		—	—	—	—	—	—	—	—	—	○

LM-K2 series

■1-axis servo amplifier

Linear servo motor		Servo amplifier MR-J5-_				
Primary side (coil)	Secondary side (magnet)	40_	70_	200_	350_	500_
LM-K2P1A-01M-2SS1	LM-K2S10-288-2SS1 LM-K2S10-384-2SS1 LM-K2S10-480-2SS1 LM-K2S10-768-2SS1	○	—	—	—	—
LM-K2P1C-03M-2SS1		—	—	○	—	—
LM-K2P2A-02M-1SS1	LM-K2S20-288-1SS1 LM-K2S20-384-1SS1 LM-K2S20-480-1SS1 LM-K2S20-768-1SS1	—	○	—	—	—
LM-K2P2C-07M-1SS1		—	—	—	○	—
LM-K2P2E-12M-1SS1		—	—	—	—	○
LM-K2P3C-14M-1SS1	LM-K2S30-288-1SS1 LM-K2S30-384-1SS1 LM-K2S30-480-1SS1 LM-K2S30-768-1SS1	—	—	—	○	—
LM-K2P3E-24M-1SS1		—	—	—	—	○

■Multi-axis servo amplifier

Point

As long as the servo motor is compatible with the servo amplifier, any combination of the following is possible: servo motor series, capacity, rotary servo motor, linear servo motor, and direct drive motor.

Linear servo motor		Servo amplifier MR-J5W2-_			Servo amplifier MR-J5W3-_
Primary side (coil)	Secondary side (magnet)	44_	77_	1010_	444_
LM-K2P1A-01M-2SS1	LM-K2S10-288-2SS1 LM-K2S10-384-2SS1 LM-K2S10-480-2SS1 LM-K2S10-768-2SS1	○	○	○	○
LM-K2P2A-02M-1SS1	LM-K2S20-288-1SS1 LM-K2S20-384-1SS1	—	○	○	—

LM-AJ series

Point

The LM-AJ series linear servo motor cannot be used with the MR-J5_-_B_ servo amplifier.

■1-axis servo amplifier

Linear servo motor		Servo amplifier MR-J5-_	
Primary side (coil)	Secondary side (magnet)	40_	70_
LM-AJP1B-07K-JSS0	LM-AJS10-080-JSS0 LM-AJS10-200-JSS0 LM-AJS10-400-JSS0	○	—
LM-AJP1D-14K-JSS0		—	○
LM-AJP2B-12S-JSS0	LM-AJS20-080-JSS0 LM-AJS20-200-JSS0 LM-AJS20-400-JSS0	○	—
LM-AJP2D-23T-JSS0		—	○
LM-AJP3B-17N-JSS0	LM-AJS30-080-JSS0 LM-AJS30-200-JSS0 LM-AJS30-400-JSS0	○	—
LM-AJP3D-35R-JSS0		—	○
LM-AJP4B-22M-JSS0	LM-AJS40-080-JSS0 LM-AJS40-200-JSS0 LM-AJS40-400-JSS0	○	—
LM-AJP4D-45N-JSS0		—	○

■Multi-axis servo amplifier

Point

As long as the linear servo motor is compatible with the servo amplifier, any combination of the following is possible: linear servo motor series, capacity, rotary servo motor, linear servo motor, and direct drive motor.

Linear servo motor		Servo amplifier MR-J5W2-_			Servo amplifier MR-J5W3-_
Primary side (coil)	Secondary side (magnet)	44G	77G	1010G	444G
LM-AJP1B-07K-JSS0	LM-AJS10-080-JSS0 LM-AJS10-200-JSS0 LM-AJS10-400-JSS0	○	○	○	○
LM-AJP1D-14K-JSS0		—	○	○	—
LM-AJP2B-12S-JSS0	LM-AJS20-080-JSS0 LM-AJS20-200-JSS0 LM-AJS20-400-JSS0	○	○	○	○
LM-AJP2D-23T-JSS0		—	○	○	—
LM-AJP3B-17N-JSS0	LM-AJS30-080-JSS0 LM-AJS30-200-JSS0 LM-AJS30-400-JSS0	○	○	○	○
LM-AJP3D-35R-JSS0		—	○	○	—
LM-AJP4B-22M-JSS0	LM-AJS40-080-JSS0 LM-AJS40-200-JSS0 LM-AJS40-400-JSS0	○	○	○	○
LM-AJP4D-45N-JSS0		—	○	○	—

LM-AU series

Point

The LM-AU series linear servo motor cannot be used with the MR-J5_-_B_ servo amplifier.

Use servo amplifiers with firmware version D0 or later. Otherwise, [AL. 01A Servo motor combination error] occurs.

■1-axis servo amplifier

Linear servo motor		Servo amplifier MR-J5-_		
Primary side (coil)	Secondary side (magnet)	40_	70_	200_
LM-AUP3A-03V-JSS0	LM-AUS30-120-JSS0 LM-AUS30-180-JSS0 LM-AUS30-240-JSS0 LM-AUS30-300-JSS0 LM-AUS30-600-JSS0	○	—	—
LM-AUP3B-06V-JSS0				
LM-AUP3C-09V-JSS0				
LM-AUP3D-11R-JSS0				
LM-AUP4A-04R-JSS0	LM-AUS40-120-JSS0 LM-AUS40-180-JSS0 LM-AUS40-240-JSS0 LM-AUS40-300-JSS0 LM-AUS40-600-JSS0	—	○	—
LM-AUP4B-09R-JSS0				
LM-AUP4C-13P-JSS0				
LM-AUP4D-18M-JSS0				
LM-AUP4F-26P-JSS0		—	—	○
LM-AUP4H-35M-JSS0				

■Multi-axis servo amplifier

Point

As long as the linear servo motor is compatible with the servo amplifier, any combination of the following is possible: linear servo motor series, capacity, rotary servo motor, linear servo motor, and direct drive motor.

Linear servo motor		Servo amplifier MR-J5W2-_			Servo amplifier MR-J5W3-_
Primary side (coil)	Secondary side (magnet)	44G	77G	1010G	444G
LM-AUP3A-03V-JSS0	LM-AUS30-120-JSS0 LM-AUS30-180-JSS0 LM-AUS30-240-JSS0 LM-AUS30-300-JSS0 LM-AUS30-600-JSS0	○	○	○	○
LM-AUP3B-06V-JSS0					
LM-AUP3C-09V-JSS0					
LM-AUP3D-11R-JSS0					
LM-AUP4A-04R-JSS0	LM-AUS40-120-JSS0 LM-AUS40-180-JSS0 LM-AUS40-240-JSS0 LM-AUS40-300-JSS0 LM-AUS40-600-JSS0	—	○	○	—
LM-AUP4B-09R-JSS0					
LM-AUP4C-13P-JSS0					
LM-AUP4D-18M-JSS0					

Direct drive motor

Use direct drive motors manufactured in June 2019 or later. Otherwise, an alarm occurs.
Direct drive motors cannot be used with 400 V class servo amplifiers.

TM-RFM series

■1-axis servo amplifier

○: Standard torque

Direct drive motor	Servo amplifier MR-J5-_						
	20_	40_	60_	70_	100_	350_	500_
TM-RFM002C20	○	—	—	—	—	—	—
TM-RFM004C20	—	○	—	—	—	—	—
TM-RFM006C20	—	—	○	—	—	—	—
TM-RFM006E20	—	—	○	—	—	—	—
TM-RFM012E20	—	—	—	○	—	—	—
TM-RFM018E20	—	—	—	—	○	—	—
TM-RFM012G20	—	—	—	○	—	—	—
TM-RFM048G20	—	—	—	—	—	○	—
TM-RFM072G20	—	—	—	—	—	○	—
TM-RFM040J10	—	—	—	○	—	—	—
TM-RFM120J10	—	—	—	—	—	○	—
TM-RFM240J10	—	—	—	—	—	—	○

■Multi-axis servo amplifier

Point

As long as the servo motor is compatible with the servo amplifier, any combination of the following is possible: servo motor series, capacity, rotary servo motor, linear servo motor, and direct drive motor.

○: Standard torque

Direct drive motor	Servo amplifier MR-J5W2-_				Servo amplifier MR-J5W3-_	
	22_	44_	77_	1010_	222_	444_
TM-RFM002C20	○	○	—	—	○	○
TM-RFM004C20	—	○	○	○	—	○
TM-RFM006C20	—	—	○	○	—	—
TM-RFM006E20	—	—	○	○	—	—
TM-RFM012E20	—	—	○	○	—	—
TM-RFM018E20	—	—	—	○	—	—
TM-RFM012G20	—	—	○	○	—	—
TM-RFM040J10	—	—	○	○	—	—

TM-RG2M series/TM-RU2M series

■1-axis servo amplifier

○: Standard torque ◎: Torque increased

Direct drive motor	Servo amplifier MR-J5-_	
	20_	40_
TM-RG2M002C30 TM-RU2M002C30	○	—
TM-RG2M004E30 TM-RU2M004E30	○	◎
TM-RG2M009G30 TM-RU2M009G30	—	○

■Multi-axis servo amplifier

Point

As long as the servo motor is compatible with the servo amplifier, any combination of the following is possible: servo motor series, capacity, rotary servo motor, linear servo motor, and direct drive motor.

○: Standard torque ◎: Torque increased

Direct drive motor	Servo amplifier MR-J5W2-				Servo amplifier MR-J5W3-	
	22_	44_	77_	1010_	222_	444_
TM-RG2M002C30 TM-RU2M002C30	○	○	—	—	○	○
TM-RG2M004E30 TM-RU2M004E30	○	◎	—	—	○	◎
TM-RG2M009G30 TM-RU2M009G30	—	○	○	○	—	○

1.3 Wiring check

Before switching on the main circuit and control circuit power supplies, check the following items.

Power supply system wiring

Power supply system wiring

- Check that the power supplied to the power input terminals (L1/L2/L3/L11/L21) of the servo amplifier satisfies the defined specifications. For the power supply specifications, refer to "Servo amplifier standard specifications" in User's Manual (Introduction).
- If the power factor improving DC reactor is not used, check that P3 and P4 are connected.

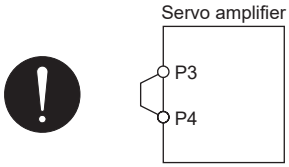

Connecting the servo amplifier to the servo motor

■MR-J5-_G_/MR-J5-_B_/MR-J5-_A_

Check that the phases (U/V/W) of the servo amplifier power outputs and the phases (U/V/W) of the servo motor power inputs match with each other.

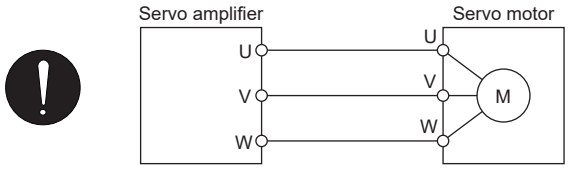

■MR-J5W_-_G_/MR-J5W-_B_

Check that each connector and servo motors are connected as follows: the CNP3A connector and the A-axis servo motor, the CNP3B connector and the B-axis servo motor, and the CNP3C connector and the C-axis servo motor. Also, check that the phases (U/V/W) of the servo amplifier power outputs and the phases (U/V/W) of the servo motor power inputs match with each other.

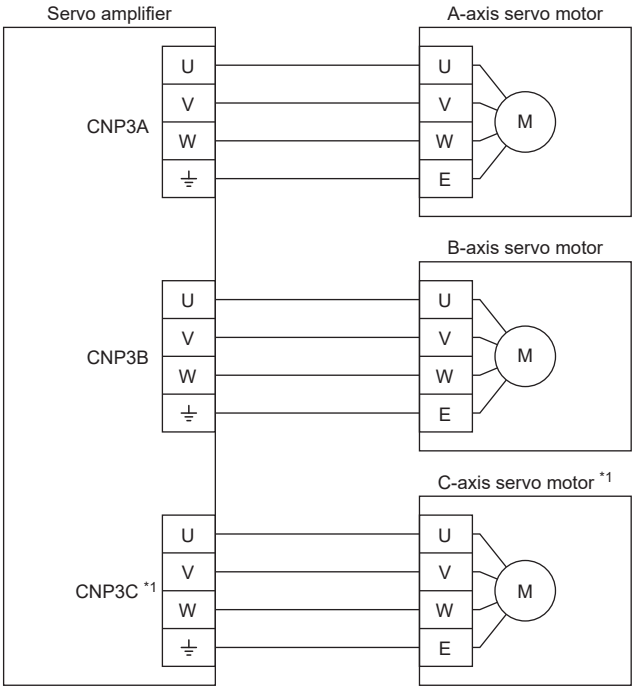

*1 This is for the MR-J5W3-_ servo amplifier.

- Check that the power to be supplied to the servo amplifier is not connected to the power outputs (U/V/W). Otherwise, the servo amplifier and servo motor will malfunction.

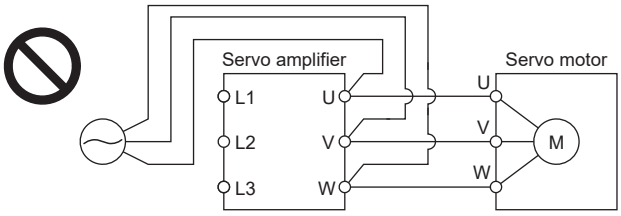

- For 1-axis servo amplifiers, check that the grounding terminal of the servo motor is connected to the PE terminal of the servo amplifier. For multi-axis servo amplifiers, check that the grounding terminal of the servo motor is connected to the grounding terminal of the CNP3A/CNP3B/CNP3C connectors.

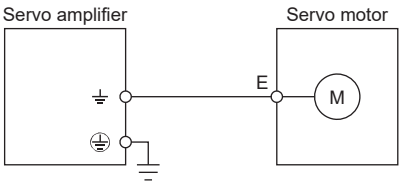

- Check that the CN2 connector of the 1-axis servo amplifier is securely connected to the encoder of the servo motor using a motor cable or encoder cable. Check that the CN2A/CN2B/CN2C connectors of the multi-axis servo amplifier are securely connected to the encoder of the servo motor using a motor cable or encoder cable.

Using options or peripheral equipment

■Regenerative option

- Check that the lead wire between terminal P+ and terminal D has been removed.
- Check that the wire of the regenerative option is connected to terminal P+ and terminal C.
- Check that twisted wires have been used for connecting the regenerative option to the servo amplifier.

☞ Page 278 Connection of regenerative option

■Simple converter

☞ Page 287 Example of configuration including peripheral equipment

■Multifunction regeneration converter

☞ Page 295 Multifunction regeneration converter (FR-XC-(H))

■Power factor improving DC reactor

- Check that a power factor improving DC reactor is connected between P3 and P4.

☞ Page 341 Power factor improving DC reactor

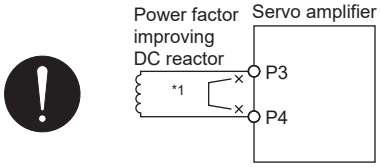

*1 Remove the wire between P3 and P4.

I/O signal wiring

- Check that I/O signals are connected correctly.

If the DO forced output mode is used, the pins of the CN3 connector can be forcibly switched on/off. This mode is used to check the wiring. In this case, switch on the control circuit power supply only. Refer to the following page for information on connecting I/O signals.

☞ Page 53 Example I/O signal connections

- Check that a voltage exceeding 24 V DC has not been applied to the pins of the CN3 connector.
- Check that the plate and DOCOM of the CN3 connector have not been shorted.

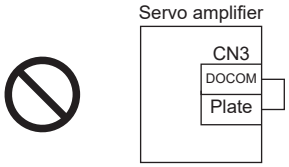

1.4 Surrounding environment

Check the following items about the environment surrounding the servo amplifier and servo motor.

Handling cables

- Check that the wiring cables have not been stressed.
- Check that the encoder cable has been used within its flex life.

☞ Page 251 Cable flex life

- Check that the connector of the servo motor has not been stressed.

Environment

Check that signal cables and power cables have not been shorted primarily by wire offcuts and metallic dust.

2 INSTALLATION

Precautions

- Install the servo amplifier and regenerative resistor on incombustible material. Installing them either directly on or near combustibles may lead to smoke or a fire. In addition, the servo amplifier must be installed in a metal cabinet.
- Provide an adequate protection to prevent the following matter from entering the servo amplifier: conductive matter such as screws and metal fragments, and combustible matter such as oil.
- Devices such as the servo amplifier regenerative resistor and servo motor may become hot. Take safety measures such as providing covers. In addition, do not directly touch the servo amplifier, regenerative resistor, or servo motor during operation or immediately after stop.
- Do not stack in excess of the specified number of product packages.
- Do not hold the front cover, cables, or connectors when carrying the servo amplifier. Doing so may cause the servo amplifier to drop.
- To prevent a malfunction, do not drop the servo amplifier or servo motor or subject them to impacts.
- Install the servo amplifier and servo motor in a place that can support their weight as stated in the user's manual.
- Do not get on the equipment or put a heavy load on it.
- Do not install or operate a servo amplifier that is missing parts or is damaged.
- To prevent a malfunction, do not block the intake and exhaust areas of the servo amplifier.
- Do not subject connectors to impacts. Doing so may cause a connection failure, malfunction, or other failures.
- Use the product within the specified environment. For the environment, refer to "Servo amplifier standard specifications" in the User's Manual (Introduction).
- To prevent a fire or injury from occurring in the event of an earthquake or other natural disaster, securely install, mount, and wire the servo amplifier as stated in the user's manual.
- When the product has been stored for an extended period of time, contact your local sales office.
- When handling the servo amplifier, be careful with the edges of the servo amplifier.
- Fumigants that are used to disinfect and protect wooden packaging from insects contain halogens (such as fluorine, chlorine, bromine, and iodine) cause damage if they enter our products. Please take necessary precautions to ensure that any residual materials from fumigants do not enter our products, or perform disinfection and pest control using a method other than fumigation, such as heat treatment. Perform disinfection and pest control on the wooden packaging materials before packing the products.
- Provide an external emergency stop circuit to stop the operation and shut-off the power immediately.
- For equipment in which the moving part of the machine may collide against the load side, install a limit switch or stopper to the end of the moving part.
- Do not use the product in environments where it is exposed to strong magnetic fields, electric fields, or radiation.

2.1 Mounting direction and clearances

Precautions

- The servo amplifier must be installed in the specified direction.
- To prevent a malfunction, maintain the specified clearances between the servo amplifier and cabinet walls or other equipment.
- Circulate air so that the air at the top and bottom of the servo amplifier does not stagnate.

Availability of close mounting

Refer to the following table for availability of close mounting.

Servo amplifier	When 3-phase power supply is input	When 1-phase power supply is input
MR-J5-10_ to MR-J5-70_	Possible	Possible
MR-J5-100_ to MR-J5-200_		Impossible
MR-J5-350_ to MR-J5-700_		—
MR-J5W2-22_ to MR-J5W2-77_	Possible	Possible
MR-J5W2-1010_		—
MR-J5W3-222_ to MR-J5W3-444_	Possible	Possible
MR-J5-60_4_ to MR-J5-350_4_	Impossible	—
MR-J5-500_4_ to MR-J5-700_4_	Impossible	—

Installation clearances for the servo amplifier (1-axis servo amplifier)

■Installation of one servo amplifier

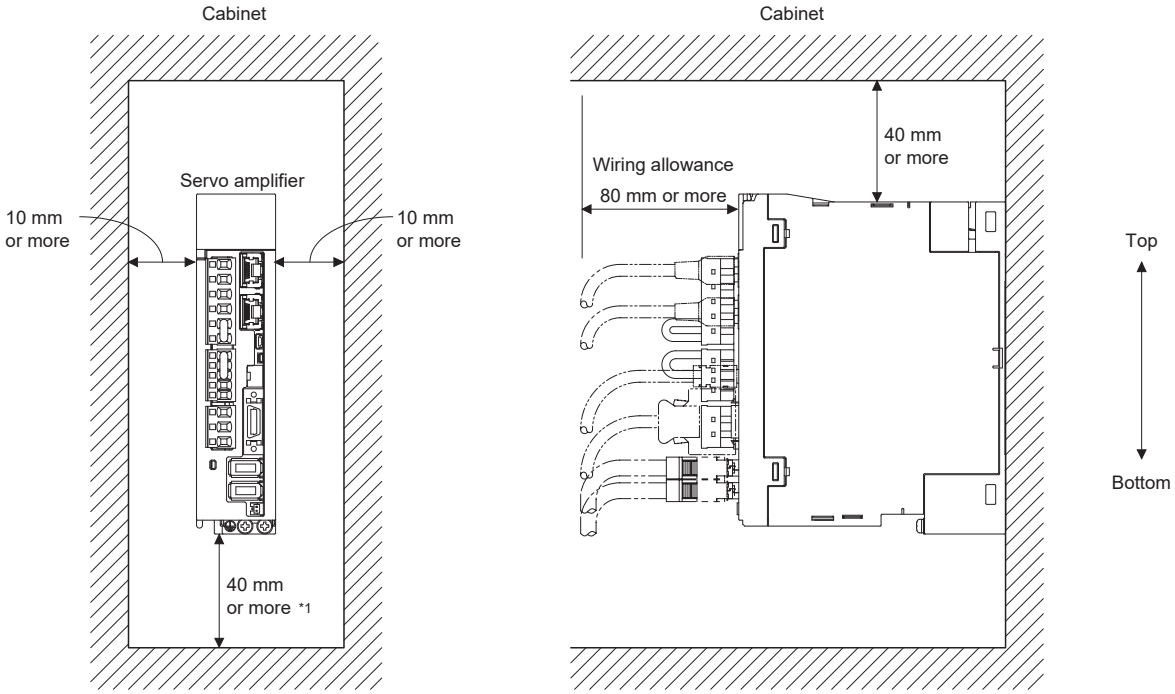

*1 For the MR-J5-500_4_ and MR-J5-700_4_, leave a clearance of at least 70 mm between the bottom of the servo amplifier and the cabinet. When using a shield clamp attachment, refer to the following.
☞ Page 405 MR-ASCHP06 shield clamp attachment

■Installation of two or more servo amplifiers

Maintain a large clearance above the servo amplifiers and install a cooling fan to prevent the temperature inside the cabinet from exceeding the temperature specified in the environmental conditions.

When closely mounting the servo amplifiers, leave a clearance of 1 mm between the adjacent servo amplifiers in consideration of mounting tolerances.

When mounting servo amplifiers in this manner, keep the ambient temperature within 0 °C to 45 °C, or use the servo amplifiers with 75 % or less of the effective load ratio.

Precautions

- When closely mounting multiple servo amplifiers, the servo amplifier on the right must have a larger depth than that on the left. Otherwise, the CNP1, CNP2, and CNP3 connectors cannot be removed.

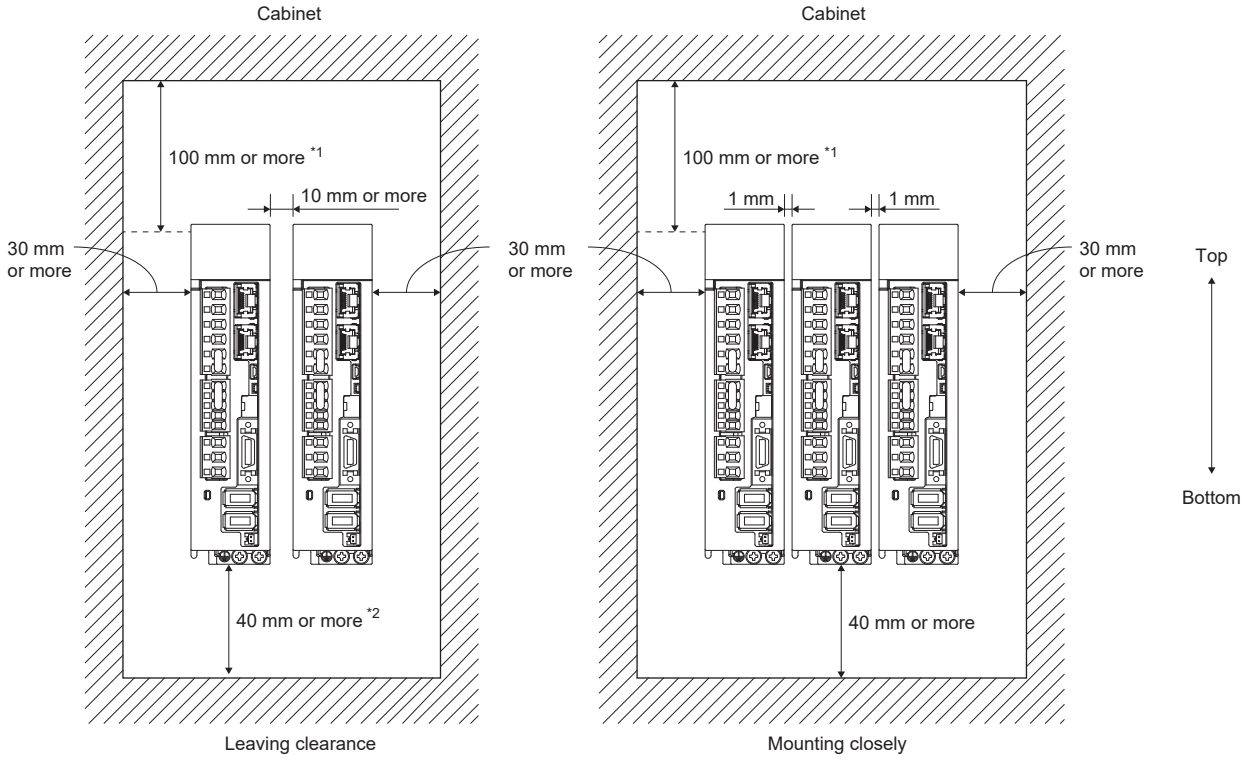

*1 Leave a clearance of 100 mm or more above the fan units.

*2 For the MR-J5-500_4_ and MR-J5-700_4_, leave a clearance of at least 70 mm between the bottom of the servo amplifier and the cabinet. When using a shield clamp attachment, refer to the following.

☞ Page 405 MR-ASCHP06 shield clamp attachment

Installation clearances for the servo amplifier (multi-axis servo amplifier)

■Installation of one servo amplifier

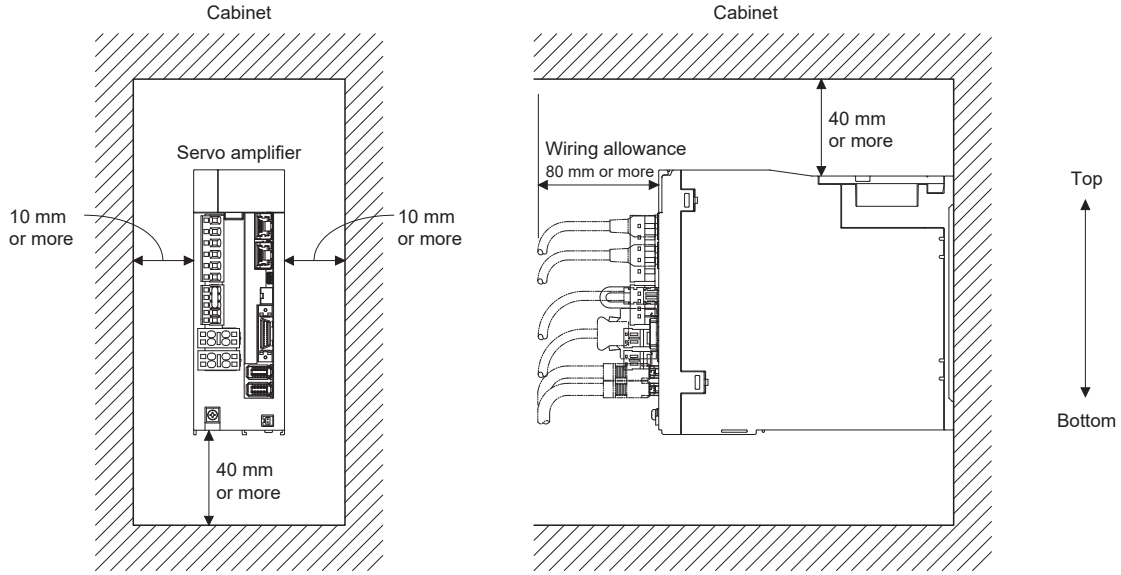

■Installation of two or more servo amplifiers

Maintain a large clearance above the servo amplifiers and install a cooling fan to prevent the temperature inside the cabinet from exceeding the temperature specified in the environmental conditions.

When closely mounting the servo amplifiers, leave a clearance of 1 mm between the adjacent servo amplifiers in consideration of mounting tolerances.

When mounting servo amplifiers in this manner, keep the ambient temperature within 0 °C to 45 °C, or use the servo amplifiers with 75 % or less of the effective load ratio.

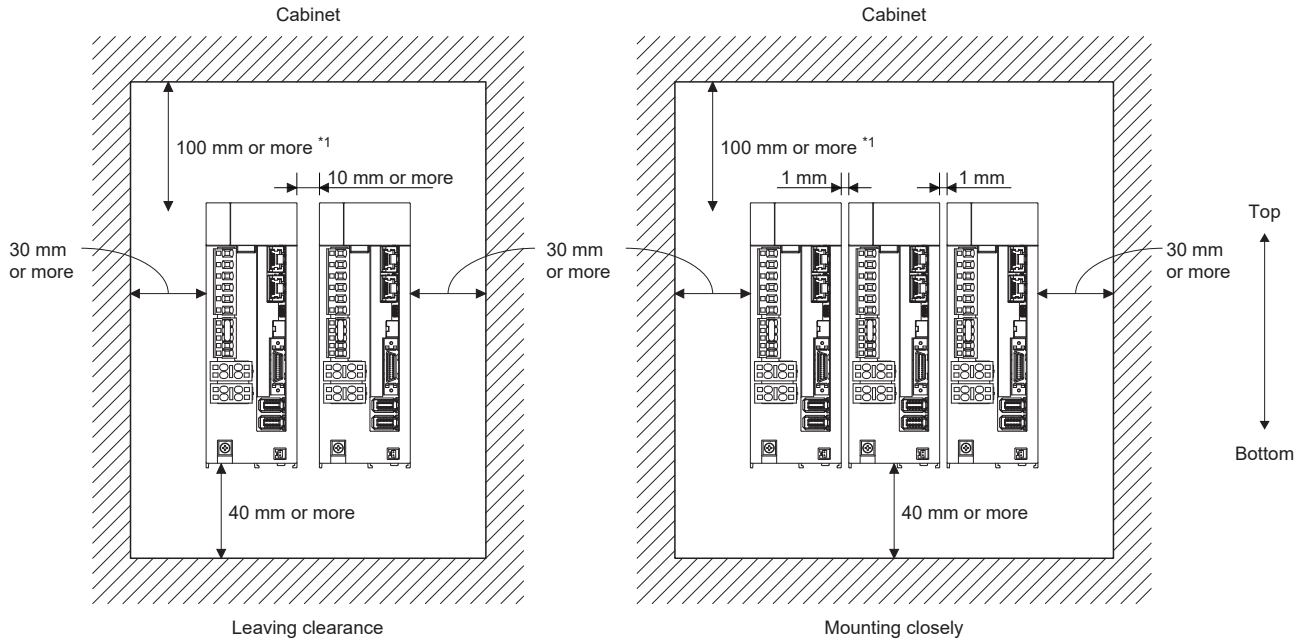

*1 Leave a clearance of 100 mm or more above the fan units.

Other precautions

When using heat generating equipment such as the regenerative option, install it with full consideration of heat generation so that the servo amplifier is not affected.

Mount the servo amplifier on a perpendicular wall in the correct vertical direction.

2.2 Keeping out foreign materials

When drilling the cabinet for assembly, prevent drill chips and wire fragments from entering the servo amplifier.
Prevent foreign matter such as oil, water, and metallic dust from entering the servo amplifier through cooling fans installed in openings in the cabinet or on the ceiling.
When installing the cabinet in a place where toxic gas, dirt, and dust exist, conduct an air purge (force clean air into the cabinet from outside to make the internal pressure higher than the external pressure) to prevent such materials from entering the cabinet.
When not using the CN7 connector in the MR-J5-500G4-HS_ and MR-J5-700G4-HS_, cover them with the supplied cap.

2.3 Cable stress

- The method used to clamp the cable must be fully examined so that bending stress and cable's own weight stress are not applied to the cable connection.
- When used for applications where the servo motor moves, fix the cable (encoder, power supply, brake) with gentle slack from the connecting part of the connector to prevent stress from being applied to the connecting part of the servo motor connector. Use the optional motor cable/encoder cable within the flex life range.
- Prevent the cable insulator from being cut by sharp chips or from touching and rubbing against the machine corners.
- Prevent the cables from getting stepped on by workers or run over by vehicles.
- If installing the servo motor that moves on a machine, make the bend radius as large as possible. Refer to the following for the flex life.

☞ Page 251 Cable flex life

Precautions

- The cables should not be damaged, stressed, loaded, or pinched.

2.4 SSCNET III cable laying [B]

The SSCNET III cable is made from optical fiber. If a force such as a major shock, lateral pressure, haul, sudden bending, or twist is applied to optical fiber, its inside distorts or breaks, and optical transmission will not be available. Especially, as optical fiber for the MR-J3BUS_M and MR-J3BUS_M-A is made of synthetic resin, it melts if exposed to fire or high temperature. Therefore, prevent it from being in contact with parts that can become hot such as the heat sink or regenerative option of the servo amplifier.
Read the descriptions in this section carefully and handle the cable with caution.

Minimum bend radius

Lay the cable with a greater radius than the minimum bend radius. Prevent the cable from being pressed against edges or other sharp parts of equipment. For the SSCNET III cable, the appropriate length should be selected with due consideration for the dimensions and arrangement of the servo amplifier so that the cable is laid with a greater radius than the minimum bending radius. When closing the door of cabinet, pay careful attention for avoiding the case that the SSCNET III cable is held down by the door and the cable bend becomes smaller than the minimum bend radius. For the minimum bend radius, refer to the following.
☞ Page 267 SSCNET III cable [B]

Prohibition of using vinyl tape

Migrating plasticizers are used for vinyl tape. Keep the MR-J3BUS_M and MR-J3BUS_M-A cables away from vinyl tape because the optical characteristics may be affected.

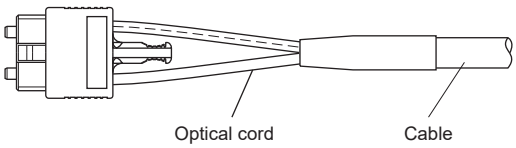

SSCNET III cable	Cord	Cable
MR-J3BUS_M	△	—
MR-J3BUS_M-A	△	△
MR-J3BUS_M-B	○	○

△: Phthalate ester plasticizers such as DBP and DOP may affect the optical characteristics of the cable.
○: The cord and cable are not affected by plasticizers.

Precautions for materials containing migrating plasticizers

Generally, soft polyvinyl chloride (PVC), polyethylene resin (PE), and fluorine resin contain non-migrating plasticizers and they do not affect the optical characteristics of the SSCNET III cable. However, some wire sheaths and cable ties containing migrating plasticizers (phthalate ester) may affect the MR-J3BUS_M and MR-J3BUS_M-A cables (made of plastic).
Note that the MR-J3BUS_M-B cable (made of silica glass) is not affected by plasticizers.
A chemical substances may affect its optical characteristics. Therefore, check that the cable is not affected by the operating environment in advance.

Fixing bundled cables

Fix the cables at the closest part to the connector with a bundling material in order to prevent the SSCNET III cable from putting its own weight on the CN1A and CN1B connectors of the servo amplifier. Give a loose slack to the optical cord to allow a radius greater than the minimum bending radius. Do not twist the optical cord.

When bundling the cables, fix and hold them in position by using a cushioning material such as sponge or rubber which does not contain migrating plasticizers.

If adhesive tape is to be used to bundle the cables, the flame-retardant acetate cloth adhesive tape 570F (TERAOKA SEISAKUSHO CO., LTD.) is recommended.

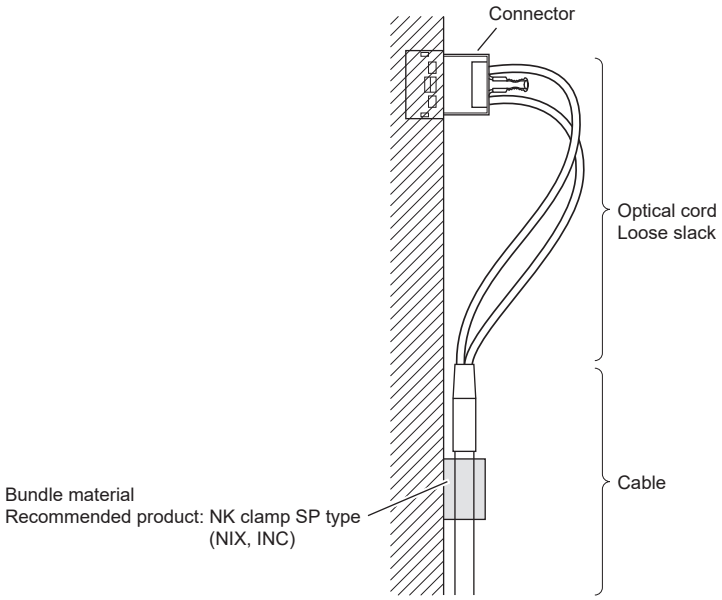

Tension

If tension is applied to the optical fiber, transmission loss increases because of an external force which concentrates on the fixing part of the optical fiber or the connecting part of the optical connector. This may cause the breakage of the optical fiber or damage of the optical connector. Be careful not to apply excessive tension when laying the cable. For the tension strength, refer to the following.

☞ Page 267 SSCNET III cable [B]

Lateral pressure

Applying lateral pressure to the optical cable distorts the optical cable itself and stresses the internal optical fiber, increasing transmission loss. This may cause the breakage of the optical cable. As the same condition occurs when the cables are bundled, do not tighten the optical cable with a nylon band (cable tie) or a similar material.

Do not step on it or get it caught in any parts such as the door of the cabinet.

2.5 Fan unit replacement procedure

The fan unit is composed of a cooling fan and its cover. If replacing the cooling fan, replace the entire fan unit.
Shut off the power supply before replacing the fan unit.

List of applicable fan units

Servo amplifier	Model of fan unit to be replaced
MR-J5-70_ MR-J5-100_	MR-J5-FAN1
MR-J5-200_ MR-J5-350_	MR-J5-FAN2 MR-J5-FAN6
MR-J5-500_	MR-J5-FAN3
MR-J5-700_	MR-J5-FAN4
MR-J5W2-44_	MR-J5W-FAN1
MR-J5W2-77_ MR-J5W2-1010_	MR-J5W-FAN3
MR-J5W3-222_ MR-J5W3-444_	MR-J5W-FAN2
MR-J5-200_4_ MR-J5-350_4_	MR-J5-FAN2 MR-J5-FAN6
MR-J5-500_4_ MR-J5-700_4_	MR-J5-FAN7

Fan unit removal procedure

The following illustrates an example where the MR-J5-FAN1 is removed from the MR-J5-70G. The number of screws for mounting differs depending on the fan unit.

1. Remove the screws that fixed the fan unit. Keep the removed screws for installation of the new fan unit.

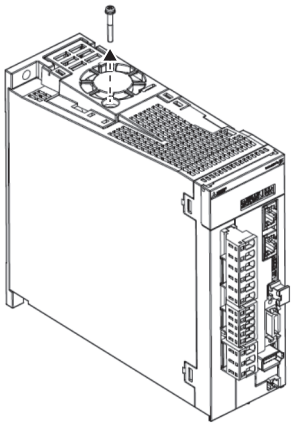

2. Pull up the cover of the fan unit using a precision screwdriver.

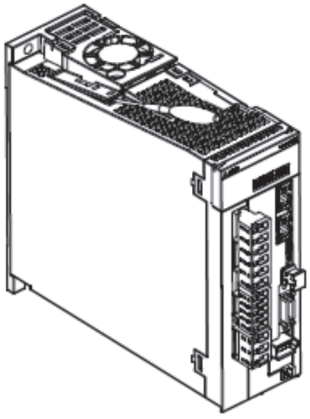

3. Pull out the fan unit vertically.

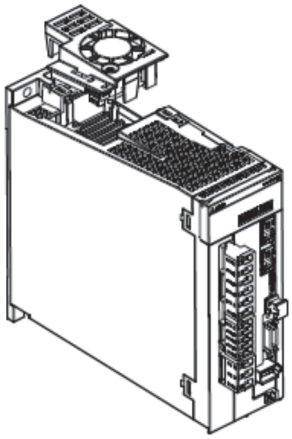

Fan unit installation procedure

The following illustrates an example where the MR-J5-FAN1 is installed to the MR-J5-70G. The number of screws for mounting differs depending on the fan unit.

Insert the positioning part of the fan unit vertically, align it to the positioning part of the main unit case, and tighten with screws. Use the same screws as those used for the fan unit before replacement.

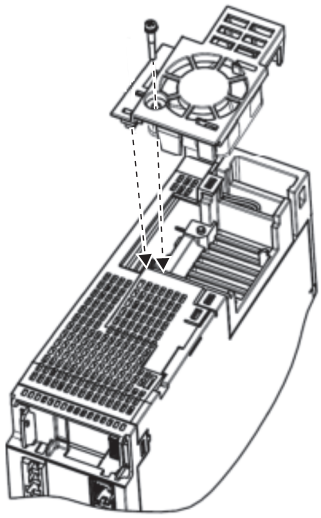

2.6 Restrictions when using this product at an altitude exceeding 1000 m and up to 2000 m

Altitude and ambient temperature

As heat dissipation effects decrease in proportion to the decrease in air density (5 °C per 1000 m), use the product within the ambient temperature range shown in the following figure.

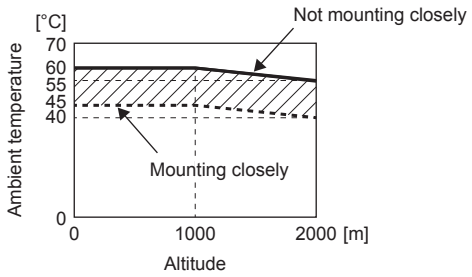

When mounting servo amplifiers close together while using them in environments comparable to those within the diagonal lines in the figure above, use them at an effective load ratio of 75 % or less.
Refer to "Derating" in the user's manual of each servo motor for servo motor restrictions.

Input voltage

Generally, withstand voltage decreases as altitude increases; however, there is no restriction on the withstand voltage.

Parts with a service life

■Smoothing capacitor

The capacitor will reach the end of its service life in 10 years of continuous operation in an air-conditioned environment (with an ambient temperature of 30 °C or less).

■Relays

There is no restriction.

■Servo amplifier cooling fan

There is no restriction.

3 SIGNALS AND WIRING

Precautions

- When using a linear servo motor, the terms below have the following meanings.

Load to motor inertia ratio → Load to motor mass ratio

Torque → Thrust

- Insulate the conductive parts of the terminals.
- Turn off the power and wait for 15 minutes or more until the charge light of the servo amplifier turns off. Checking the voltage between P+ and N- using the tester, etc. is recommended.
- If using a regenerative resistor, configure a circuit that shuts off the main circuit power supply with an alarm signal because abnormal overheating of the regenerative resistor may cause smoke and fire.
- To prevent failure and malfunction, only the power supply/signal specified in the user's manual should be connected to a corresponding terminal.
- To prevent unexpected operation of the servo motor, wire the equipment correctly and securely.
- Make sure to connect the cables and connectors by using the fixing screws and the locking mechanism. Otherwise, the cables and connectors may be disconnected during operation.
- Unless stated otherwise, all connection diagrams in this user's manual are sink interface diagrams.
- Install a surge absorbing diode in the correct direction. Failing to do so may cause the amplifier to malfunction and not to output signals, disabling protective circuits such as the emergency stop.

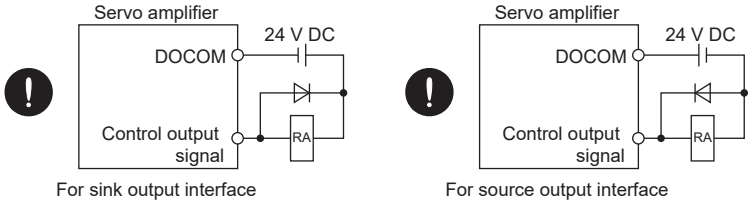

- If the wires are not properly secured to the terminal block, the poor contact may cause the wires and terminal block to generate heat. Make sure to secure the wires with the specified torque.
- Connecting the servo motor for an incorrect axis to the power outputs (U/V/W) or CN2/CN2A/CN2B/CN2C of the servo amplifier may cause a malfunction.
- Make sure that no operation signal is being input to the servo amplifier before resetting an alarm or releasing the emergency stop. Failing to do so may cause an unexpected operation.
- If the power supply is shut off by a molded-case circuit breaker or a fuse, remove the cause and secure safety before switching the power on.
- Install the servo amplifier according to the EMC guidelines because electromagnetic interference may affect the electronic equipment used near the servo amplifier.
- To prevent an electric shock or a fire, do not disassemble, repair, or modify the product. Disassembled, repaired, and/or modified products are not covered under warranty.
- Eliminate static electricity before performing actions such as wiring or operating a switch.

3.1 Example power circuit connections

Precautions

- To prevent a fire, install a molded-case circuit breaker or fuse to the main circuit power supply (L1/L2/L3) of a servo amplifier.
- Connect a magnetic contactor between a power supply and the main circuit power supply (L1/L2/L3) of a servo amplifier to configure a circuit that shuts off the main circuit power supply of the servo amplifier when a malfunction or alarm of the servo amplifier occurs.
- Use a configuration that shuts off the main circuit power supply with ALM (Malfunction).
- Check the servo amplifier model and use the correct power supply voltage.
- Exogenous noise or lightning surges may degrade the characteristics of the surge absorber (varistor) built into the servo amplifier and damage it.
- Do not shut off the control circuit power supply even if an alarm occurs. If the control circuit power supply is shut off, network communication will be interrupted.
- In the torque mode, EM2 functions the same as EM1.
- If using the MR-J5 servo amplifier with the DC power supply input, refer to the following.

☞ Page 51 Using servo amplifier with DC power supply input

- To prevent malfunction, avoid bundling the servo amplifier's power lines (input/output) and signal cables together or running them parallel to each other. Separate the power lines from the signal cables.
- Provide adequate protection to prevent an unexpected restart after an instantaneous power failure.
- Configure wiring so that the main circuit power supply is shut off and the servo-on command is turned off after deceleration to a stop due to an alarm occurrence, an enabled servo forced stop, or a quick stop command from the controller. Use a molded-case circuit breaker (MCCB) with the input cables of the main circuit power supply.
- When insulating the main circuit power supply (L1/L2/L3) and the control circuit power supply (L11/L21) of the servo amplifier using an isolation transformer, etc., connect between L1 and L11 and between L2 and L21 at equipotential.

200 V class

For 3-phase 200 V AC to 240 V AC power supply (1-axis servo amplifier)

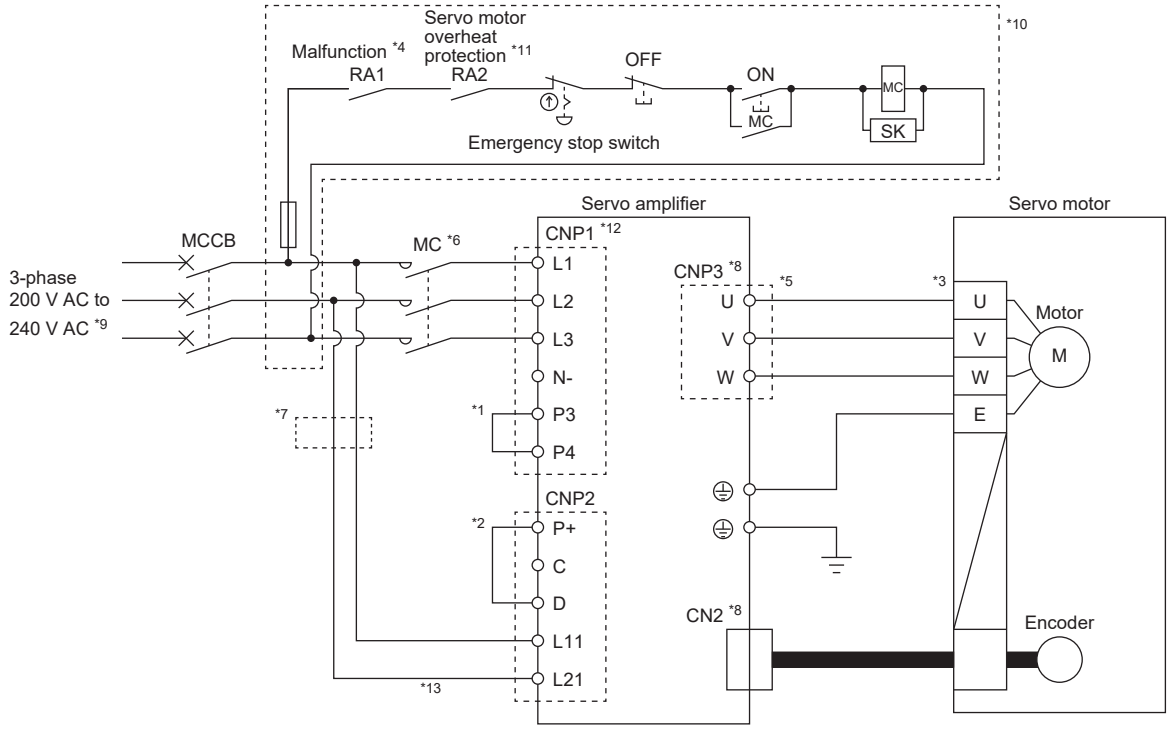

*1 P3 and P4 are connected from the factory. If using a power factor improving DC reactor, remove the short-circuit bar between P3 and P4, then connect the power factor improving DC reactor. Additionally, the power factor improving DC reactor and a power factor improving AC reactor cannot be used together.
☞ Page 341 Power factor improving DC reactor

*2 Connect P+ and D terminals. P+ and D are connected from the factory. If using a regenerative option, refer to the following.
☞ Page 269 Regenerative option

*3 Option cables are recommended for servo motor power cables and encoder cables. For selecting cables, refer to "Cables/connector sets" in the following manual.
Rotary Servo Motor User's Manual (For MR-J5)

*4 If ALM (Malfunction) output is disabled with a servo parameter, configure a power circuit which switches off a magnetic contactor after detection of an alarm occurrence on the controller side.

*5 For connecting servo motor power wires, refer to "CONNECTION OF SERVO AMPLIFIER AND ROTARY SERVO MOTOR" in the following manual.
Rotary Servo Motor User's Manual (For MR-J5)

*6 Use the magnetic contactor with an operation delay time (interval between current being applied to the coil until closure of contacts) of 80 ms or less. The bus voltage may drop depending on the main circuit power supply voltage and operation pattern, causing a dynamic brake deceleration during a forced stop deceleration. If dynamic brake deceleration is not required, delay the time to turn off the magnetic contactor.

*7 If wires used for L11 and L21 are thinner than wires used for L1, L2, and L3, use a molded-case circuit breaker.
☞ Page 329 Molded-case circuit breakers, fuses, magnetic contactors

*8 Connecting the servo motor for an incorrect axis to U, V, W, or CN2 of the servo amplifier may cause a malfunction.

*9 For 1-phase 200 V AC to 240 V AC power supply, connect the power supply to L1 and L3. Leave L2 open.

*10 If operating the on switch and off switch of the main circuit power supply with a DC power supply, do not share the 24 V DC power supply for interface with the magnetic contactor. Use the power supply designed exclusively for the magnetic contactor. Refer to the following for the magnetic contactors that can be used.
☞ Page 334 Driving on/off of main circuit power supply with DC power supply (1-axis servo amplifier)
Operating the on switch and off switch with the DC power supply meets IEC/EN 60204-1 requirements. Also, change the configuration of the part inside the dotted line as follows.

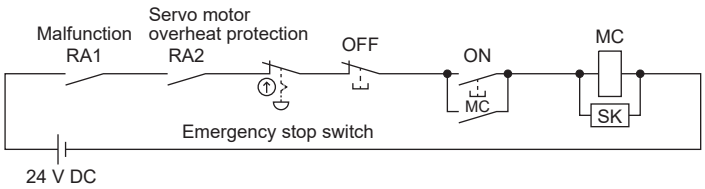

*11 When connecting a linear servo motor that has a thermal protector, add a contact that interlocks with the thermal protector output of the linear servo motor.

*12 For MR-J5-500_ and MR-J5-700_ servo amplifiers, the CNP1 connector is divided into two: CNP1A connector (L1/L2/L3) and CNP1B connector (N1/P3/P4).

*13 Even if the control circuit power supply is separated from the main circuit power supply using an uninterruptible power supply (UPS) or insulation transformer, do not ground L11 and L21.

For 3-phase 200 V AC to 240 V AC power supply (multi-axis servo amplifier)

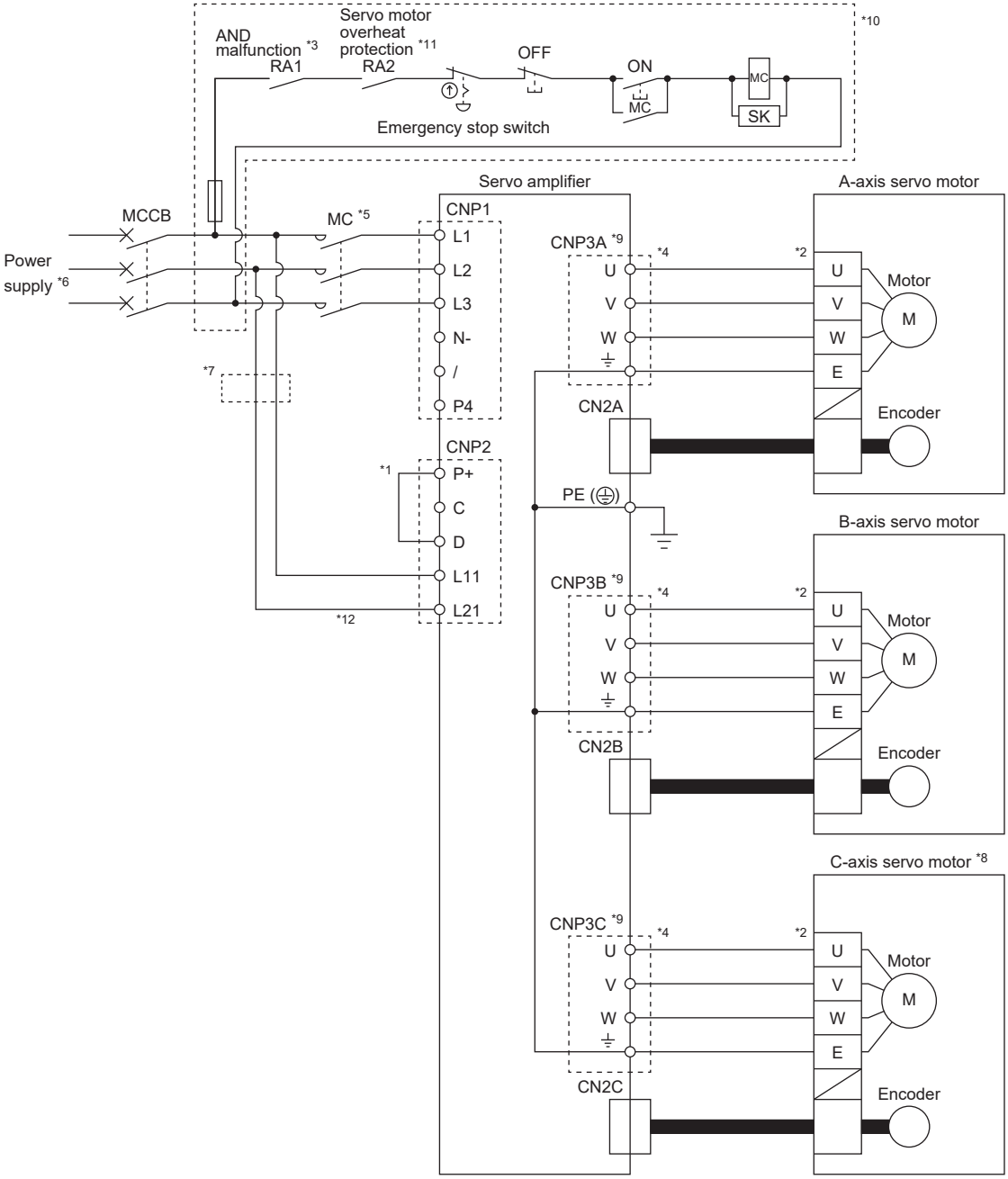

*1 The servo amplifier is shipped from the factory with P+ and D already connected. If using a regenerative option, refer to the following.
☞ Page 269 Regenerative option

*2 Option cables are recommended for servo motor power cables and encoder cables. For selecting cables, refer to "Cables/connector sets" in the following manual.
📖Rotary Servo Motor User's Manual (For MR-J5)

*3 This circuit is a connection example of stopping all axes when an alarm occurs. If CALM (AND malfunction) output is disabled with a servo parameter, configure a power circuit which switches off a magnetic contactor after detection of alarm occurrence on the controller side.

*4 For connecting servo motor power wires, refer to "CONNECTION OF SERVO AMPLIFIER AND ROTARY SERVO MOTOR" in the following manual.
📖Rotary Servo Motor User's Manual (For MR-J5)

*5 Use the magnetic contactor with an operation delay time (interval between current being applied to the coil until closure of contacts) of 80 ms or less. The bus voltage may drop depending on the main circuit power supply voltage and operation pattern, causing a dynamic brake deceleration during a forced stop deceleration. If dynamic brake deceleration is not required, delay the time to turn off the magnetic contactor.

*6 For 1-phase 200 V AC to 240 V AC power supply, connect the power supply to L1 and L3. Leave L2 open.

*7 If wires used for L11 and L21 are thinner than wires used for L1, L2, and L3, use a molded-case circuit breaker.
☞ Page 329 Molded-case circuit breakers, fuses, magnetic contactors

*8 The diagram is for the MR-J5W3-_G_ servo amplifier.

*9 Connecting a servo motor of the incorrect axis to the CNP3A, CNP3B, or CNP3C connector may cause a malfunction.

*10 If operating the on switch and off switch of the main circuit power supply with a DC power supply, do not share the 24 V DC power supply for interface with the magnetic contactor. Use the power supply designed exclusively for the magnetic contactor. Refer to the following for the magnetic contactors that can be used.
☞ Page 334 Driving on/off of main circuit power supply with DC power supply (multi-axis servo amplifier)
Operating the on switch and off switch with the DC power supply meets IEC/EN 60204-1 requirements. Also, change the configuration of the part inside the dotted line as follows.

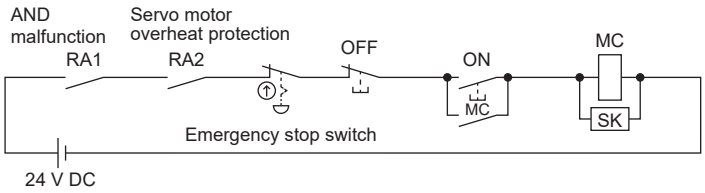

*11 When connecting a linear servo motor that has a thermal protector, add a contact that interlocks with the thermal protector output of the linear servo motor.

*12 Even if the control circuit power supply is separated from the main circuit power supply using an uninterruptible power supply (UPS) or insulation transformer, do not ground L11 and L21.

400 V class

For 3-phase 380 V AC to 480 V AC power supply (1-axis servo amplifier)

■MR-J5-60_4_ to MR-J5-350_4_

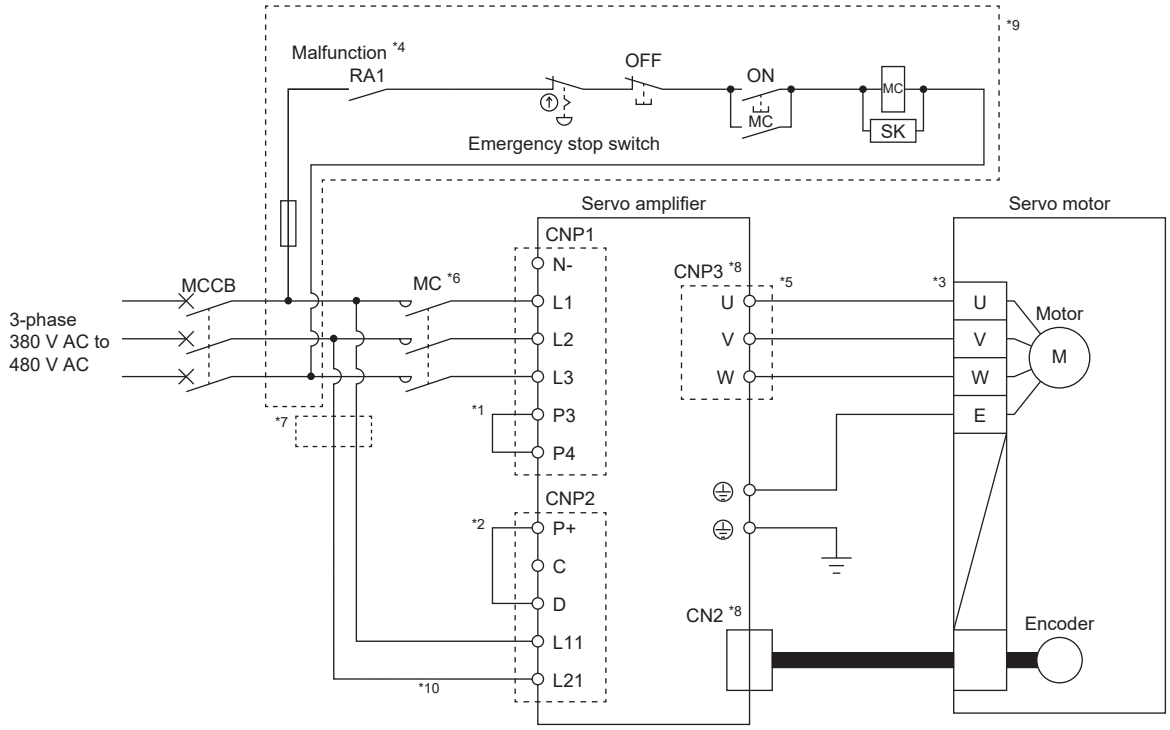

*1 P3 and P4 are connected from the factory. If using a power factor improving DC reactor, remove the short-circuit bar between P3 and P4, then connect the power factor improving DC reactor. Additionally, the power factor improving DC reactor and a power factor improving AC reactor cannot be used together.
☞ Page 341 Power factor improving DC reactor

*2 Connect P+ and D terminals. P+ and D are connected from the factory. If using a regenerative option, refer to the following.
☞ Page 269 Regenerative option

*3 Option cables are recommended for servo motor power cables and encoder cables. For selecting cables, refer to "Cables/connector sets" in the following manual.
Rotary Servo Motor User's Manual (For MR-J5)

*4 If ALM (Malfunction) output is disabled with a servo parameter, configure a power circuit which switches off a magnetic contactor after detection of an alarm occurrence on the controller side.

*5 For connecting servo motor power wires, refer to "CONNECTION OF SERVO AMPLIFIER AND ROTARY SERVO MOTOR" in the following manual.
Rotary Servo Motor User's Manual (For MR-J5)

*6 Use the magnetic contactor with an operation delay time (interval between current being applied to the coil until closure of contacts) of 80 ms or less. The bus voltage may drop depending on the main circuit power supply voltage and operation pattern, causing a dynamic brake deceleration during a forced stop deceleration. If dynamic brake deceleration is not required, delay the time to turn off the magnetic contactor.

*7 If wires used for L11 and L21 are thinner than wires used for L1, L2, and L3, use a molded-case circuit breaker.
☞ Page 329 Molded-case circuit breakers, fuses, magnetic contactors

*8 Connecting the servo motor for an incorrect axis to U, V, W, or CN2 of the servo amplifier may cause a malfunction.

*9 If operating the on switch and off switch of the main circuit power supply with a DC power supply, do not share the 24 V DC power supply for interface with the magnetic contactor. Use the power supply designed exclusively for the magnetic contactor. Refer to the following for the magnetic contactors that can be used.
☞ Page 334 Driving on/off of main circuit power supply with DC power supply (1-axis servo amplifier)
Operating the on switch and off switch with the DC power supply meets IEC/EN 60204-1 requirements. Also, change the configuration of the part inside the dotted line as follows.

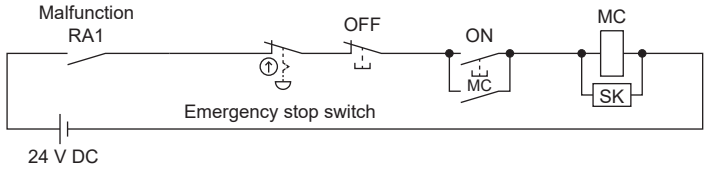

*10 Even if the control circuit power supply is separated from the main circuit power supply using an uninterruptible power supply (UPS) or insulation transformer, do not ground L11 and L21.

■MR-J5-500_4_ to MR-J5-700_4_

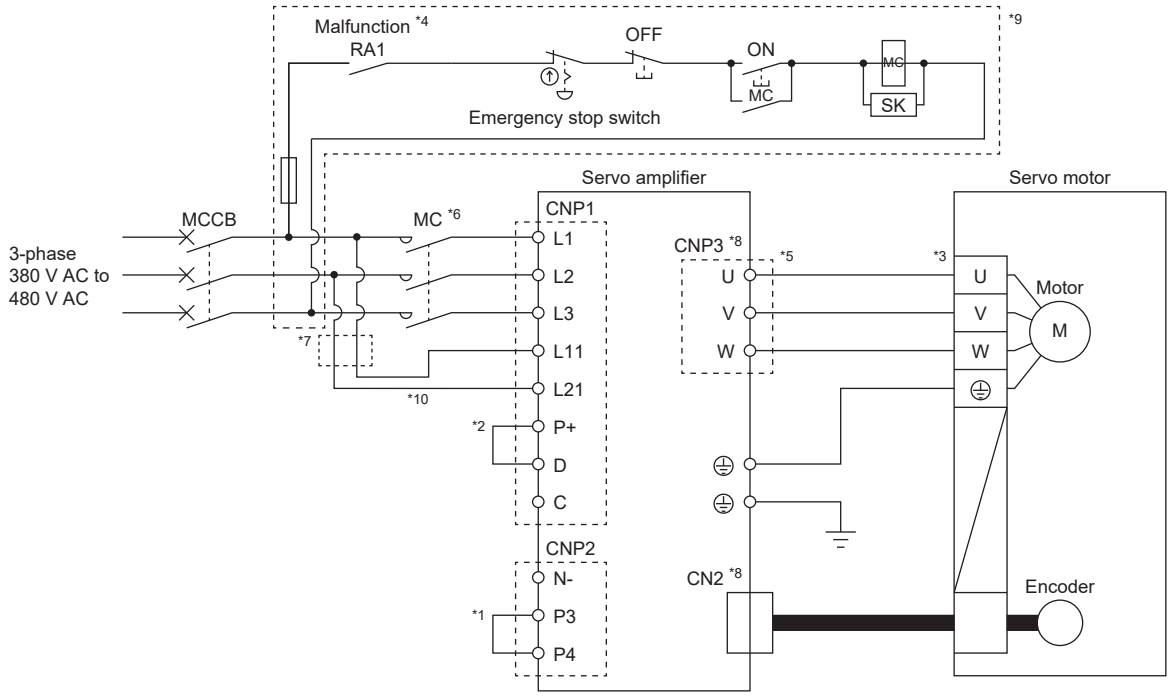

*1 P3 and P4 are connected from the factory. If using a power factor improving DC reactor, remove the short-circuit bar between P3 and P4, then connect the power factor improving DC reactor. Additionally, the power factor improving DC reactor and a power factor improving AC reactor cannot be used together.
☞ Page 341 Power factor improving DC reactor

*2 Connect P+ and D terminals. P+ and D are connected from the factory. If using a regenerative option, refer to the following.
☞ Page 269 Regenerative option

*3 Option cables are recommended for servo motor power cables and encoder cables. For selecting cables, refer to "Cables/connector sets" in the following manual.
Rotary Servo Motor User's Manual (For MR-J5)

*4 If ALM (Malfunction) output is disabled with a servo parameter, configure a power circuit which switches off a magnetic contactor after detection of an alarm occurrence on the controller side.

*5 For connecting servo motor power wires, refer to "CONNECTION OF SERVO AMPLIFIER AND ROTARY SERVO MOTOR" in the following manual.
Rotary Servo Motor User's Manual (For MR-J5)

*6 Use the magnetic contactor with an operation delay time (interval between current being applied to the coil until closure of contacts) of 80 ms or less. The bus voltage may drop depending on the main circuit power supply voltage and operation pattern, causing a dynamic brake deceleration during a forced stop deceleration. If dynamic brake deceleration is not required, delay the time to turn off the magnetic contactor.

*7 If wires used for L11 and L21 are thinner than wires used for L1, L2, and L3, use a molded-case circuit breaker.
☞ Page 329 Molded-case circuit breakers, fuses, magnetic contactors

*8 Connecting the servo motor for an incorrect axis to U, V, W, or CN2 of the servo amplifier may cause a malfunction.

*9 If operating the on switch and off switch of the main circuit power supply with a DC power supply, do not share the 24 V DC power supply for interface with the magnetic contactor. Use the power supply designed exclusively for the magnetic contactor. Refer to the following for the magnetic contactors that can be used.
☞ Page 334 Driving on/off of main circuit power supply with DC power supply (1-axis servo amplifier)
Operating the on switch and off switch with the DC power supply meets IEC/EN 60204-1 requirements. Also, change the configuration of the part inside the dotted line as follows.

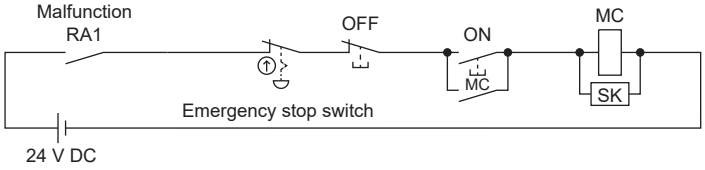

*10 Even if the control circuit power supply is separated from the main circuit power supply using an uninterruptible power supply (UPS) or insulation transformer, do not ground L11 and L21.

Using servo amplifier with DC power supply input

Connection example

Refer to the following for the signals and wiring not described in this section.

☞ Page 44 200 V class

■MR-J5-10_ to MR-J5-100_/MR-J5W2-22_/MR-J5W2-44_/MR-J5W3-222_

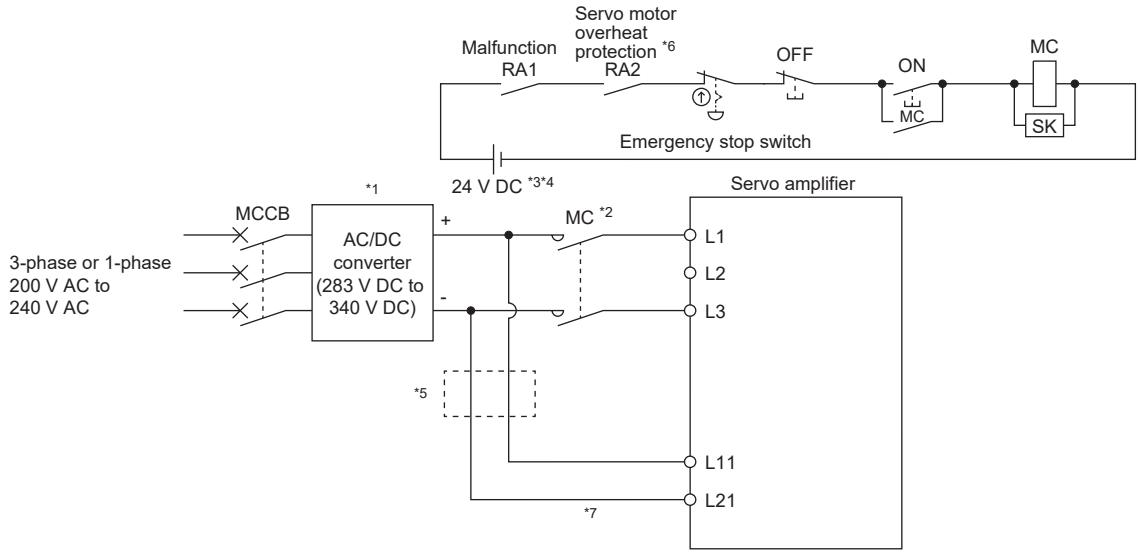

*1 For the power supply specifications, refer to "Servo amplifier standard specifications" in User's Manual (Introduction).

*2 Use the magnetic contactor with an operation delay time (interval between current being applied to the coil until closure of contacts) of 80 ms or less. The bus voltage may drop depending on the main circuit power supply voltage and operation pattern, causing a dynamic brake deceleration during a forced stop deceleration. If dynamic brake deceleration is not required, delay the time to turn off the magnetic contactor.

*3 Operating the on switch and off switch with the DC power supply meets IEC/EN 60204-1 requirements.

*4 Do not share the 24 V DC power supply for interface with a magnetic contactor. Use the power supply designed exclusively for the magnetic contactor.

*5 If wires used for L11 and L21 are thinner than wires used for L1 and L3, use a fuse.
☞ Page 333 Using servo amplifier with DC power supply input

*6 When connecting a linear servo motor that has a thermal protector, add a contact that interlocks with the thermal protector output of the linear servo motor.

*7 Even if the control circuit power supply is separated from the main circuit power supply using an uninterruptible power supply (UPS) or insulation transformer, do not ground L11 and L21.

■MR-J5-200_/MR-J5-350_/MR-J5-500_/MR-J5-700_/MR-J5W2-77_/MR-J5W2-1010_/MR-J5W3-444_

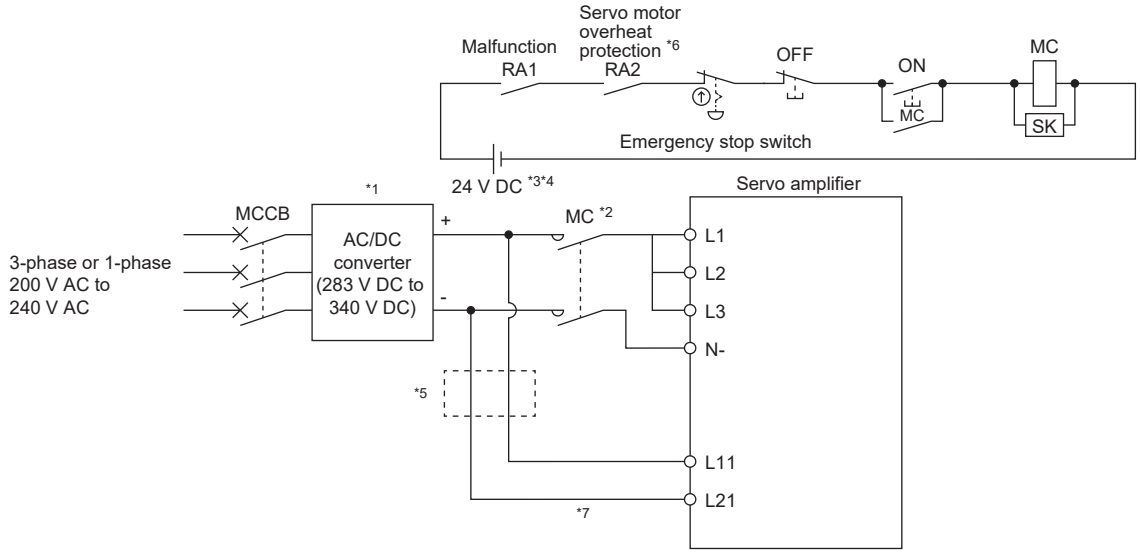

*1 For the power supply specifications, refer to "Servo amplifier standard specifications" in User's Manual (Introduction).

*2 Use the magnetic contactor with an operation delay time (interval between current being applied to the coil until closure of contacts) of 80 ms or less (160 ms or less for 5 kW or more). The bus voltage may drop depending on the main circuit power supply voltage and operation pattern, causing a dynamic brake deceleration during a forced stop deceleration. If dynamic brake deceleration is not required, delay the time to turn off the magnetic contactor.

*3 Operating the on switch and off switch with the DC power supply meets IEC/EN 60204-1 requirements.

*4 Do not share the 24 V DC power supply for interface with a magnetic contactor. Use the power supply designed exclusively for the magnetic contactor.

*5 If wires used for L11 and L21 are thinner than wires used for L1, L2, L3, and N-, use a fuse.
☞ Page 333 Using servo amplifier with DC power supply input

*6 When connecting a linear servo motor that has a thermal protector, add a contact that interlocks with the thermal protector output of the linear servo motor.

*7 Even if the control circuit power supply is separated from the main circuit power supply using an uninterruptible power supply (UPS) or insulation transformer, do not ground L11 and L21.

3.2 Example I/O signal connections

Precautions

- Do not connect CN1A and CN1B connectors to a network other than the network used by this servo amplifier. Doing so may cause a malfunction.
- In the torque mode, EM2 functions the same as EM1.

MR-J5-_G_ (excluding MR-J5-_G_-HS_)

Sink I/O interface

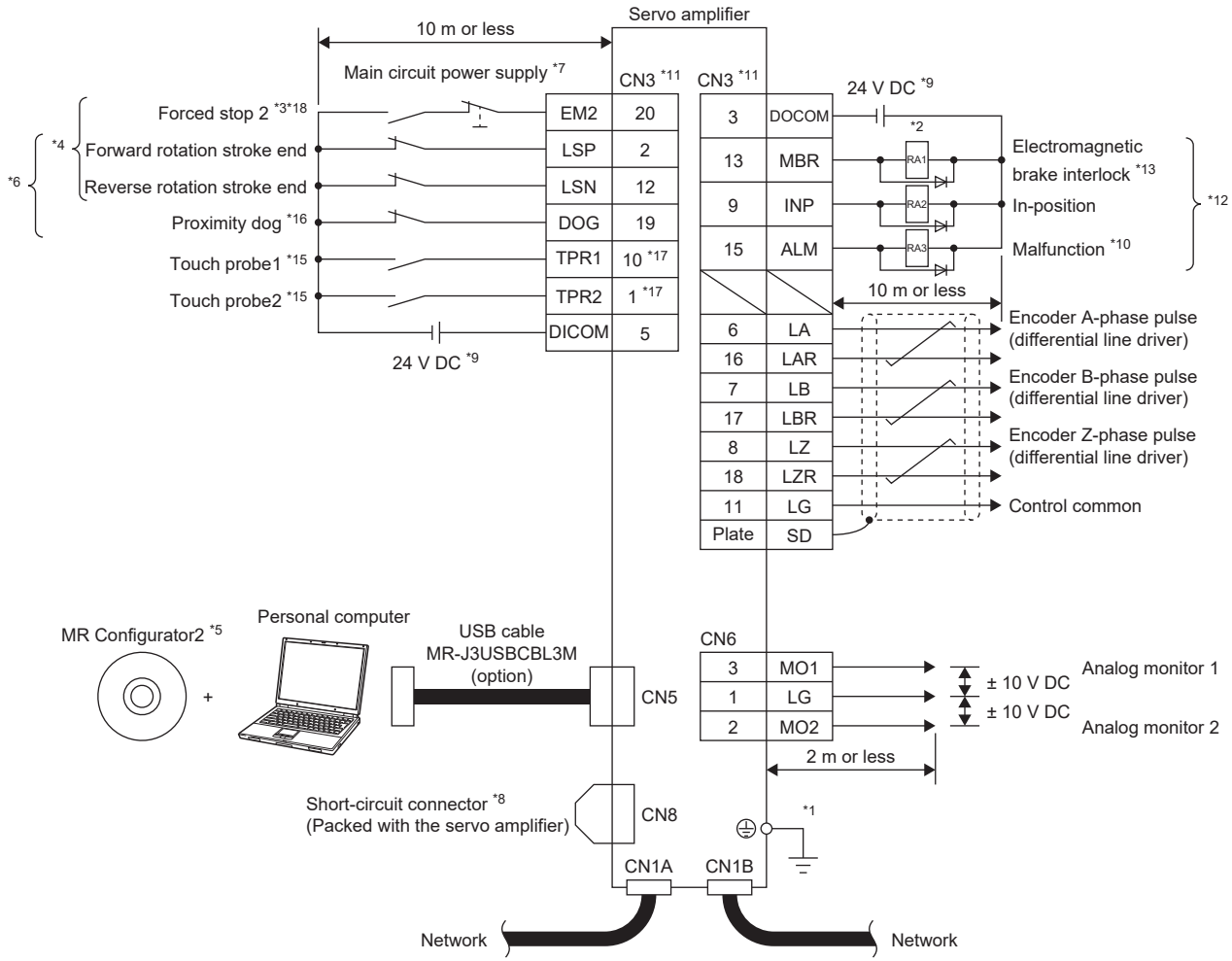

*1 To prevent an electric shock, connect the protective earth (PE) terminal (the terminal marked with the symbol) of the servo amplifier to the protective earth (PE) of the cabinet.⏚

*2 Connect the diode in the correct direction. If it is connected reversely, the servo amplifier may malfunction and not output signals, disabling protective circuits such as EM2 (Forced stop 2).

*3 If the controller does not have the forced stop function, install a forced stop 2 switch (normally closed contact).

*4 When starting operation, turn on EM2 (Forced stop 2), LSP (Forward rotation stroke end), and LSN (Reverse rotation stroke end) (normally closed contact). If FLS (Upper stroke limit) and RLS (Lower stroke limit) are used via a controller, wiring LSP and LSN is unnecessary. In that case, set [Pr. PD41].

*5 Use SW1DNC-MRC2-_.

*6 The devices of these pins can be changed with servo parameters ([Pr. PD03] to [Pr. PD05]).

*7 To prevent an unexpected restart of the servo amplifier, configure a circuit that turns off EM2 when the main circuit power supply is turned off.

*8 If not using the STO function, attach the short-circuit connector that came with the servo amplifier.

*9 Supply 24 V DC ± 10 % to interfaces from an external source. The total current capacity of these power supplies is 300 mA maximum. This value is applicable when all I/O signals are used. Reducing the number of I/O points decreases the current capacity. For the current required for interfaces, refer to the following.
☞ Page 133 Digital input interface DI-1
Although the diagram shows the input signal and the output signal each using a separate 24 V DC power supply for illustrative purposes, the system can be configured to use a single 24 V DC power supply.

*10 If no alarm is occurring, ALM (Malfunction) is on (normally closed contact).

*11 The pins with the same signal name are connected in the servo amplifier.

*12 The devices of these pins can be changed with servo parameters ([Pr. PD07] to [Pr. PD09]).

*13 If installing an external brake mechanism for a linear servo motor or direct drive motor, use MBR (Electromagnetic brake interlock).

*14 For source interfaces, the positive and negative outputs of the power supply are reversed as compared with sink interfaces.

*15 Some device functions are limited by the firmware version and the date of manufacture of the servo amplifier being used. Refer to the following for details.
☞ Page 104 Input device explanation [G]

*16 If using the MR-J5-_G_-RJ_, this device can be changed to TPR3 (touch probe 3) by servo parameter settings. To set the device to TPR3, the wiring must be the same as TPR1 and TPR2.

*17 Some pin functions are limited by the date of manufacture of the servo amplifier being used. Refer to the following for details.
☞ Page 98 Input device pin [G]

*18 This device is used for forced stop of the servo amplifier. Perform an emergency stop of the whole system on the controller side.

Source I/O interface

Precautions

- For notes, refer to the notes in the following section.

☞ Page 53 Sink I/O interface

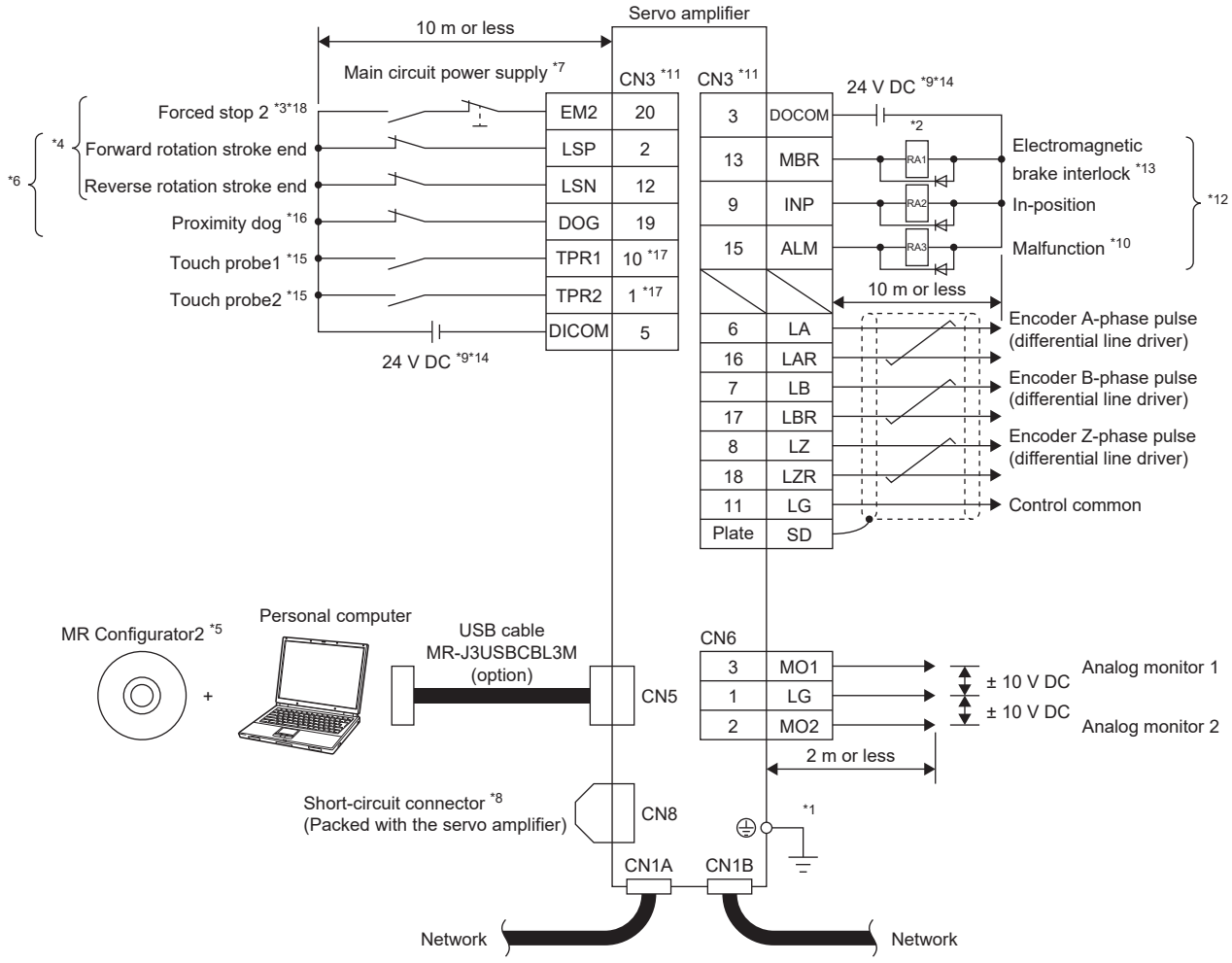

Sink I/O interface

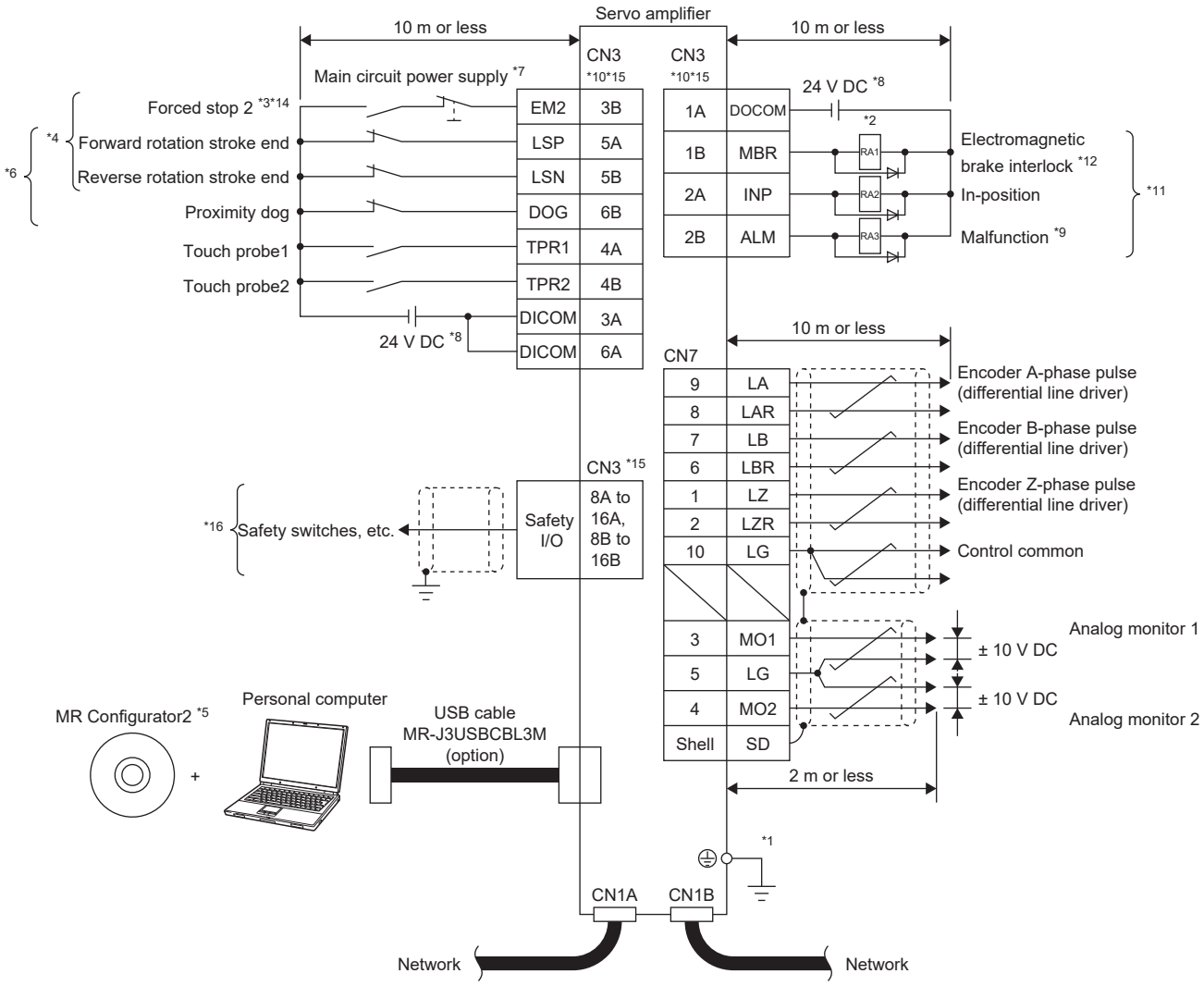

*1 To prevent an electric shock, connect the protective earth (PE) terminal (the terminal marked with the symbol) of the servo amplifier to the protective earth (PE) of the cabinet.
*2 Connect the diode in the correct direction. If it is connected reversely, the servo amplifier may malfunction and not output signals, disabling protective circuits such as EM2 (Forced stop 2).
*3 If the controller does not have the forced stop function, install a forced stop 2 switch (normally closed contact).
*4 When starting operation, turn on EM2 (Forced stop 2), LSP (Forward rotation stroke end), and LSN (Reverse rotation stroke end) (normally closed contact). If FLS (Upper stroke limit) and RLS (Lower stroke limit) are used via a controller, wiring LSP and LSN is unnecessary. In that case, set [Pr. PD41].
*5 Use SW1DNC-MRC2-_.
*6 The devices of these pins can be changed with servo parameters ([Pr. PD03] to [Pr. PD05]).
*7 To prevent an unexpected restart of the servo amplifier, configure a circuit that turns off EM2 when the main circuit power supply is turned off.
*8 Supply 24 V DC ± 10 % to interfaces from an external source. The total current capacity of these power supplies is 300 mA maximum. This value is applicable when all I/O signals are used. Reducing the number of I/O points decreases the current capacity. For the current required for interfaces, refer to the following.
☞ Page 133 Digital input interface DI-1
Although the diagram shows the input signal and the output signal each using a separate 24 V DC power supply for illustrative purposes, the system can be configured to use a single 24 V DC power supply.
*9 If no alarm is occurring, ALM (Malfunction) is on (normally closed contact).
*10 The pins with the same signal name are connected in the servo amplifier.
*11 The devices of these pins can be changed with servo parameters ([Pr. PD07] to [Pr. PD09]).
*12 If installing an external brake mechanism for a linear servo motor or direct drive motor, use MBR (Electromagnetic brake interlock).
*13 For source interfaces, the positive and negative outputs of the power supply are reversed as compared with sink interfaces.
*14 This device is used for forced stop of the servo amplifier. Perform an emergency stop of the whole system on the controller side.
*15 Since the frame of the CN3 connector is not connected to the protective earth (PE) terminal, using a cable clamp fitting or shield connection clamp for grounding is recommended.
Refer to the following for details.
☞ Page 359 Cable clamp fitting AERSBAN-_SET
☞ Page 410 SCC 15-F Shield connection clamp
*16 Refer to the following for the connection of these pins.
☞ Page 479 Example I/O signal connections

Source I/O interface

Precautions

- For notes, refer to the notes in the following section.

☞ Page 56 Sink I/O interface

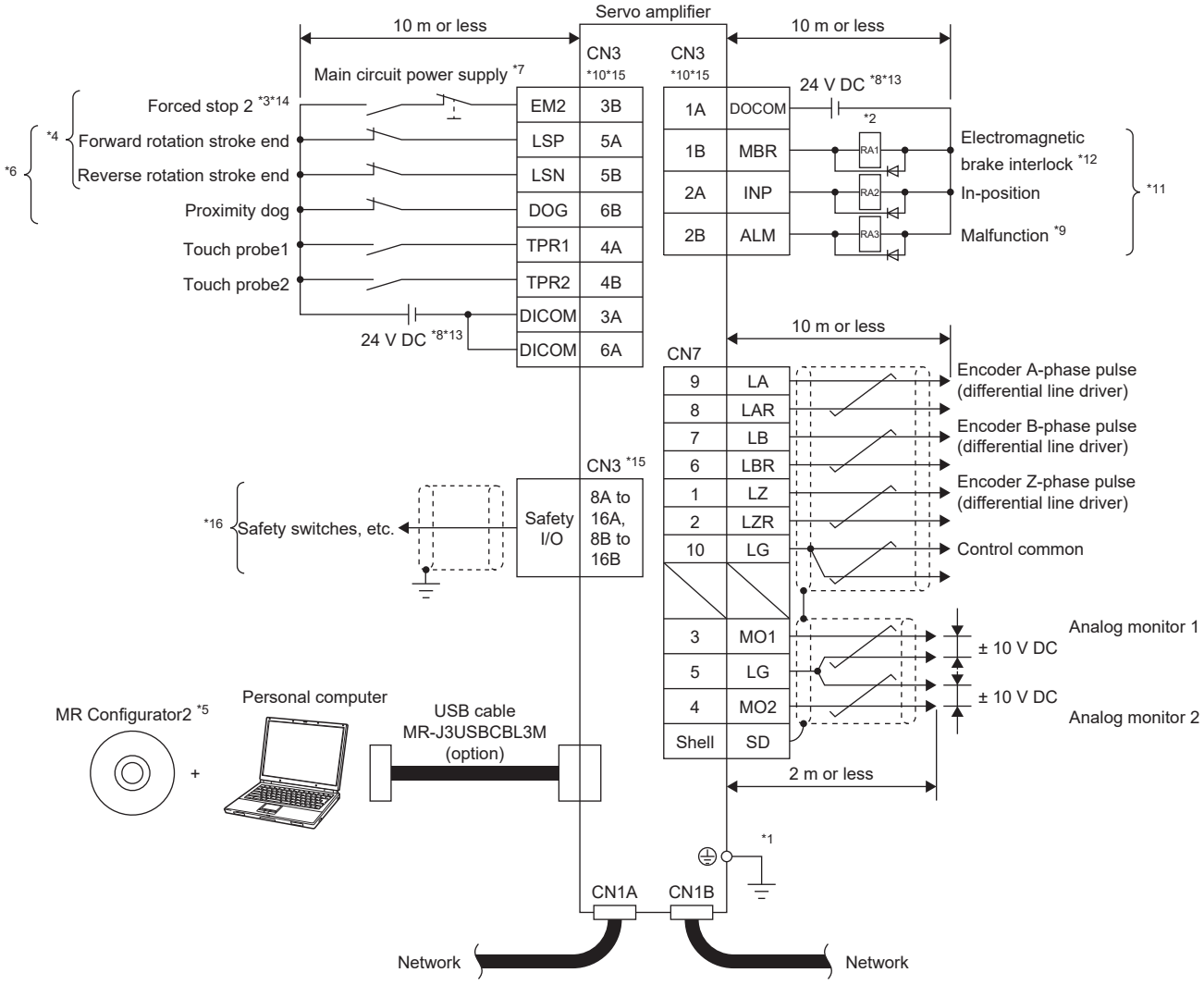

Precautions

Do not connect CN1A and CN1B connectors to a network other than the network used by this servo amplifier. Doing so may cause a malfunction.

- In the torque control mode, EM2 functions the same as EM1.

Sink I/O interface

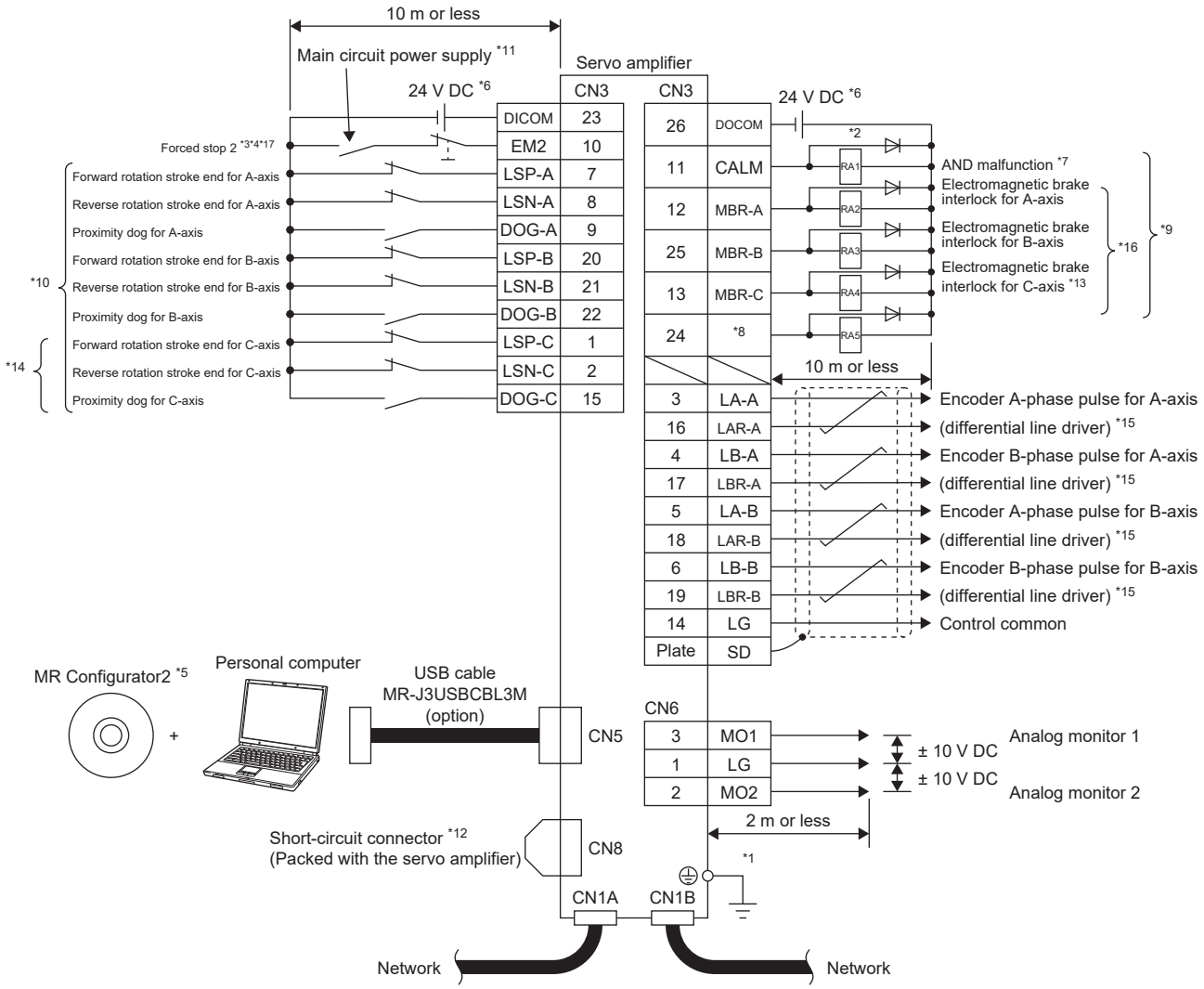

*1 To prevent an electric shock, connect the protective earth (PE) terminal (the terminal marked with the symbol) of the servo amplifier to the protective earth (PE) of the cabinet. ⏚

*2 Connect the diode in the correct direction. If it is connected reversely, the servo amplifier may malfunction and not output signals, disabling protective circuits such as EM2 (Forced stop 2).

*3 If the controller does not have the forced stop function, install a forced stop 2 switch (normally closed contact).

*4 When starting operation, turn on EM2 (Forced stop 2), LSP (Forward rotation stroke end), and LSN (Reverse rotation stroke end) (normally closed contact). If FLS (Upper stroke limit) and RLS (Lower stroke limit) are used via a controller, wiring LSP and LSN is unnecessary. In that case, set [Pr. PD41].

*5 Use SW1DNC-MRC2-_.

*6 Supply 24 V DC ± 10 % to interfaces from an external source. The total current capacity of these power supplies is 350 mA maximum for the MR-J5W2-_G_ and 450 mA maximum for the MR-J5W3-_G_.
These values are applicable when all I/O signals are used. Reducing the number of I/O points decreases the current capacity. For the current required for interfaces, refer to the following.
☞ Page 133 Digital input interface DI-1
Although the diagram shows the input signal and the output signal each using a separate 24 V DC power supply for illustrative purposes, the system can be configured to use a single 24 V DC power supply.

*7 If no alarm is occurring, CALM (AND malfunction) is on (normally closed contact).

*8 In the initial setting, CINP (AND in-position) is assigned to this pin. The device of the pin can be changed with [Pr. PD08].

*9 The devices of these pins can be changed with servo parameters ([Pr. PD07] and [Pr. PD09]).

*10 The devices of these pins can be changed with servo parameters ([Pr. PD03] to [Pr. PD05]).

*11 To prevent an unexpected restart of the servo amplifier, configure a circuit that turns off EM2 when the main circuit power supply is turned off.

*12 If not using the STO function, attach the short-circuit connector that came with the servo amplifier.

*13 This pin cannot be used on 2-axis servo amplifiers.

*14 The diagram is for 3-axis servo amplifiers.

*15 For the availability and restrictions of encoder output pulse, refer to "Servo amplifier standard specifications" and "Restrictions on MR-J5_-_G_" in the User's Manual (Introduction).

*16 If installing an external brake mechanism for a linear servo motor or direct drive motor, use MBR (Electromagnetic brake interlock).

*17 This device is used for forced stop of the servo amplifier (common to all axes). Perform an emergency stop of the whole system on the controller side.

Source I/O interface

Precautions

- For notes, refer to the notes in the following section.

☞ Page 59 Sink I/O interface

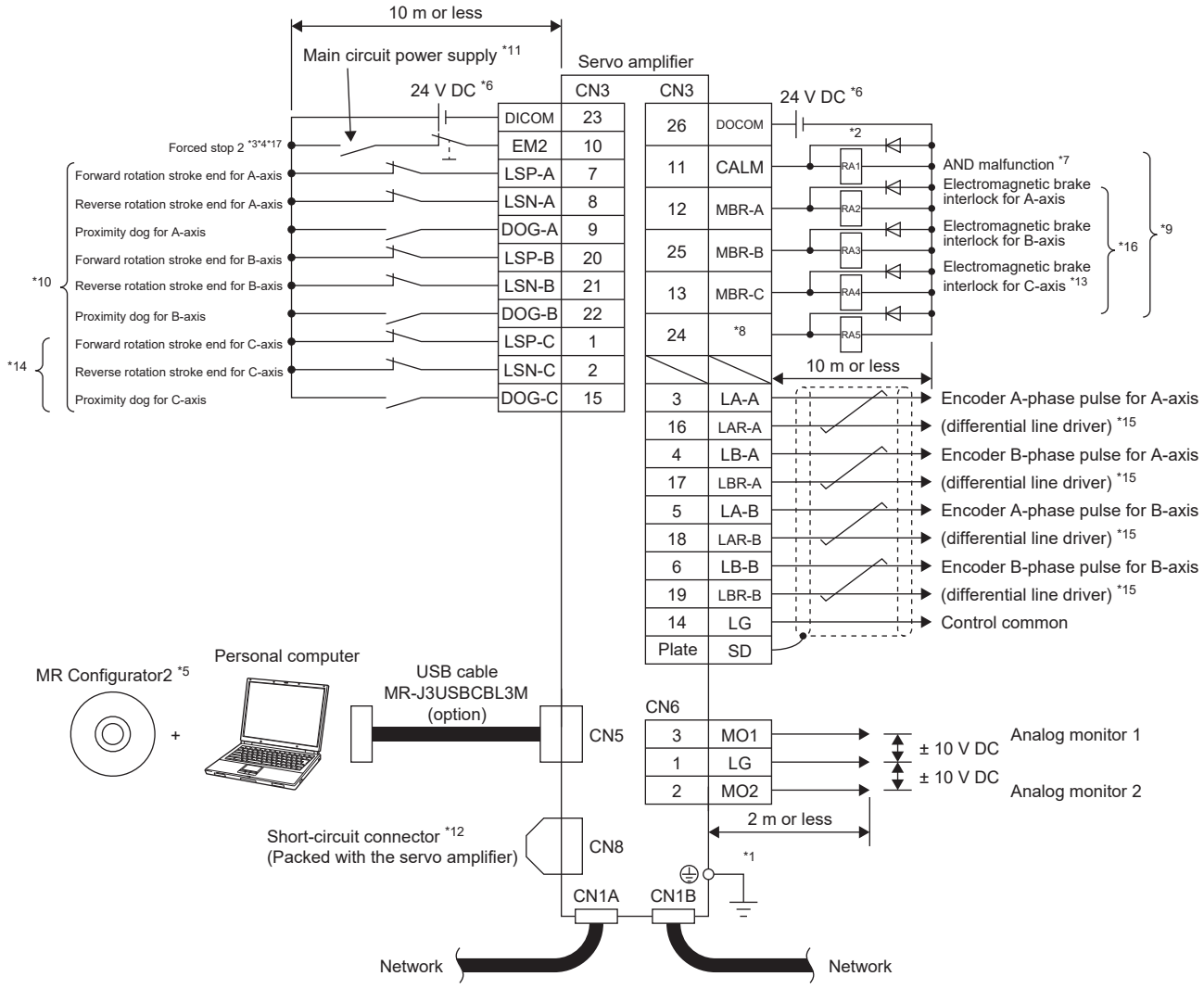

Sink I/O interface

Precautions

- Do not connect CN1A and CN1B connectors to a network other than the network used by this servo amplifier. Doing so may cause a malfunction.
- In the torque mode, EM2 functions the same as EM1.

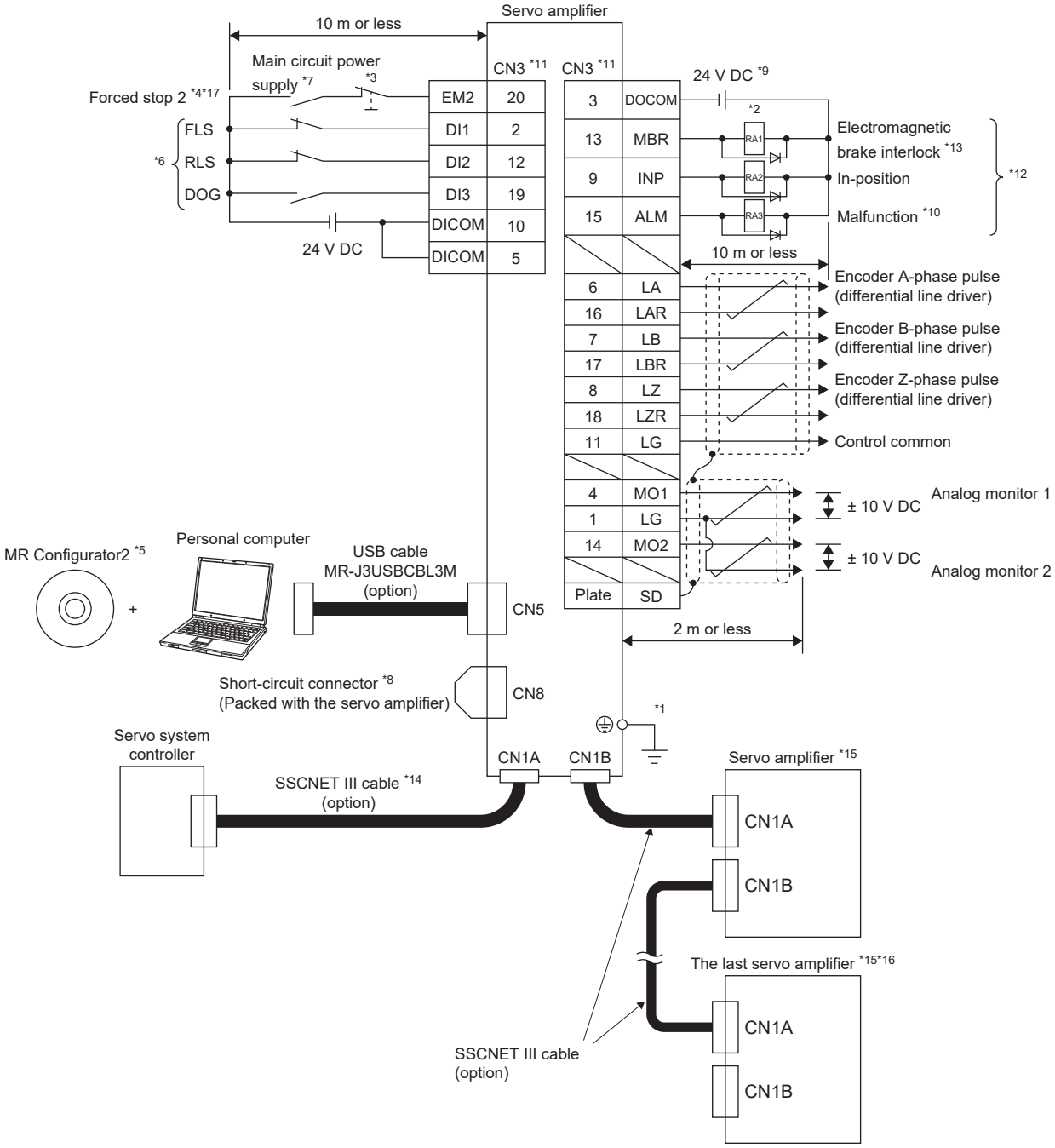

*1 To prevent an electric shock, connect the protective earth (PE) terminal (the terminal marked with the symbol) of the servo amplifier to the protective earth (PE) of the cabinet. ⏚
*2 Connect the diode in the correct direction. If it is connected reversely, the servo amplifier may malfunction and not output signals, disabling protective circuits such as EM1 (Forced stop 1).
*3 If the controller does not have the forced stop function, install a forced stop switch (normally closed contact).
*4 When starting operation, always turn on EM2 (Forced stop 2) (normally closed contact).
*5 Use SW1DNC-MRC2-_.
*6 Devices can be assigned to these pins with the controller setting. For the setting method, refer to each controller manual. Devices assigned to the pins in this example are for the Q17_DSCPU and the QD77MS_.
FLS: Upper stroke limit
RLS: Lower stroke limit
DOG: Proximity dog
*7 To prevent an unexpected restart of the servo amplifier, configure a circuit that turns off EM2 when the main circuit power supply is turned off.
*8 If not using the STO function, attach the short-circuit connector that came with the servo amplifier.
*9 Supply 24 V DC ± 10 % to interfaces from an external source. The total current capacity of these power supplies is 300 mA maximum. This value is applicable when all I/O signals are used. Reducing the number of I/O points decreases the current capacity. For the current required for interfaces, refer to the following.
☞ Page 133 Digital input interface DI-1
Although the diagram shows the input signal and the output signal each using a separate 24 V DC power supply for illustrative purposes, the system can be configured to use a single 24 V DC power supply.
*10 If no alarm is occurring, ALM (Malfunction) is on (normally closed contact).
*11 The pins with the same signal name are connected in the servo amplifier.
*12 The devices of these pins can be changed with servo parameters ([Pr. PD07] to [Pr. PD09]).
*13 If installing an external brake mechanism for a linear servo motor or direct drive motor, use MBR (Electromagnetic brake interlock).
*14 Use SSCNET III cables listed in the following table.

Cable	Cable model	Cable length
Standard cord inside cabinet	MR-J3BUS_M	0.15 m to 3 m
Standard cable outside cabinet	MR-J3BUS_M-A	5 m to 20 m
Long distance cable	MR-J3BUS_M-B	30 m to 50 m

*15 The wiring after the second servo amplifier is omitted.
*16 Up to 64 axes of servo amplifiers can be connected. The number of connectable axes depends on the specifications of the controller being used. For the axis selection setting, refer to "Switch setting and display of the servo amplifier" in the User's Manual (Introduction).
*17 This device is used for forced stop of the servo amplifier. Perform an emergency stop of the whole system on the controller side.
*18 Cover the unused CN1B connector with a cap.

Source I/O interface

Precautions

- For notes, refer to the notes in the following section.

☞ Page 62 Sink I/O interface

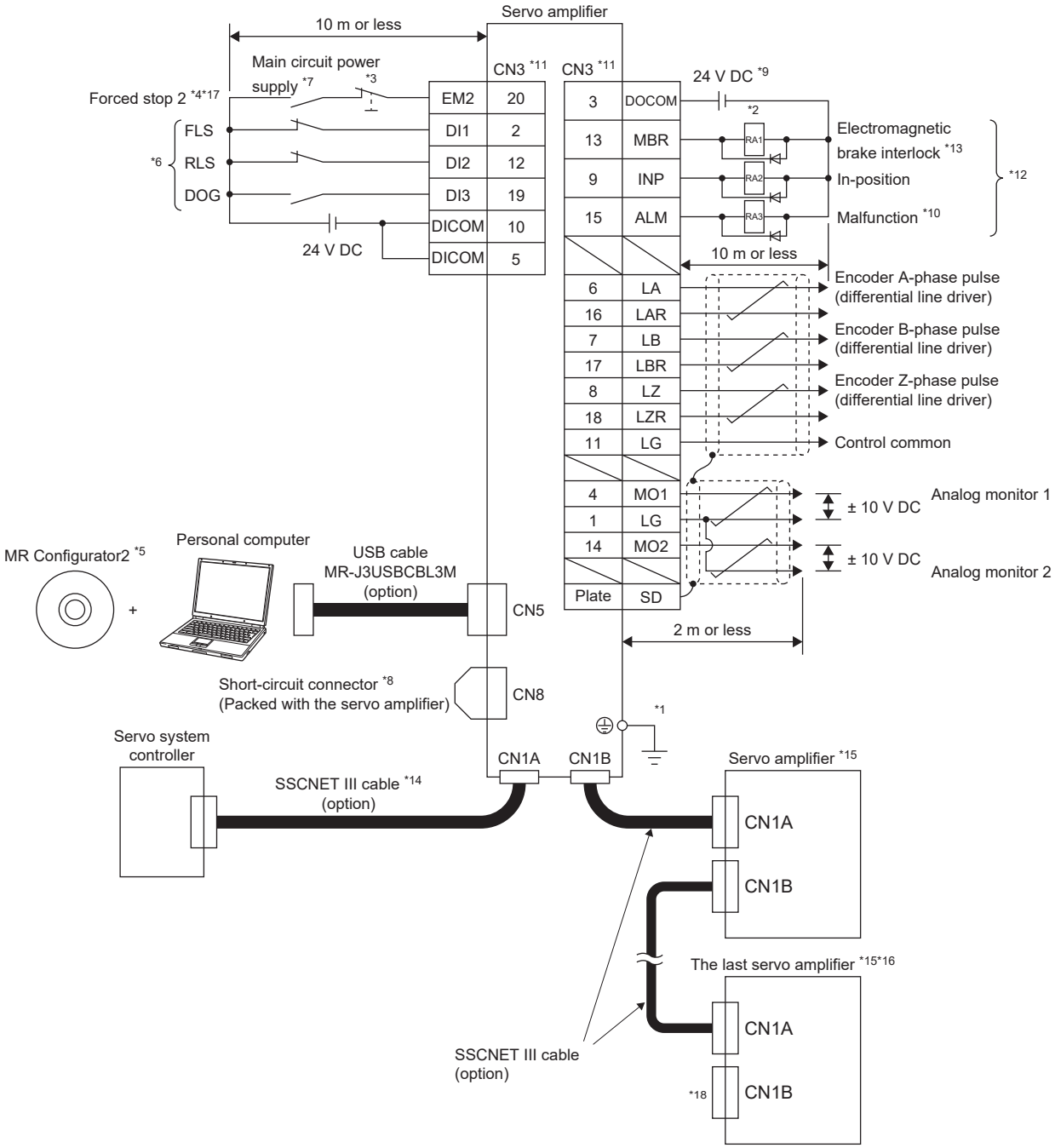

Sink I/O interface

Precautions

- Do not connect CN1A and CN1B connectors to a network other than the network used by this servo amplifier. Doing so may cause a malfunction.
- In the torque mode, EM2 functions the same as EM1.

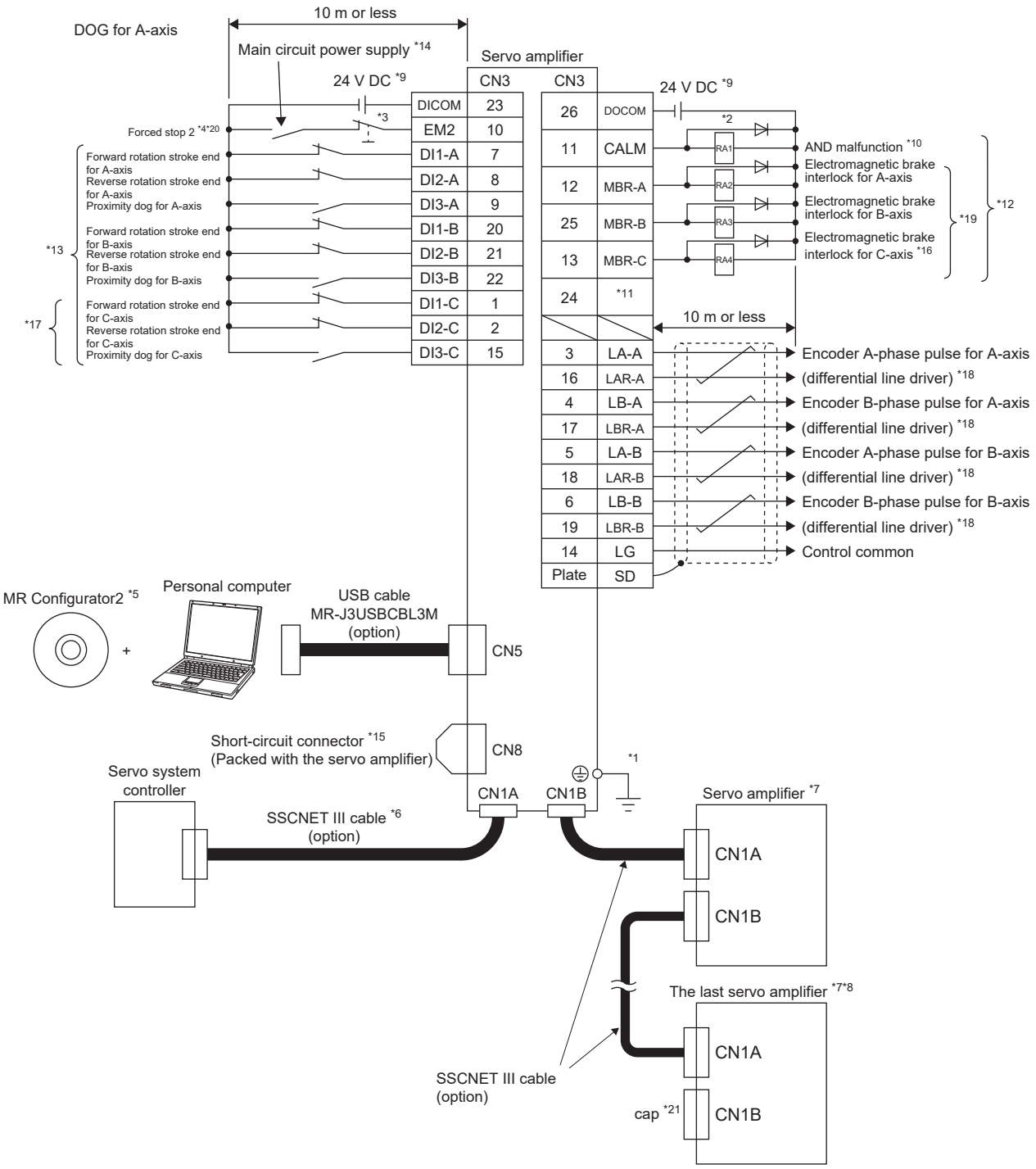

*1 To prevent an electric shock, connect the protective earth (PE) terminal (the terminal marked with the symbol) of the servo amplifier to the protective earth (PE) of the cabinet. ⏚

*2 Connect the diode in the correct direction. If it is connected reversely, the servo amplifier may malfunction and not output signals, disabling protective circuits such as EM2 (Forced stop 2).

*3 If the controller does not have the forced stop function, install a forced stop switch (normally closed contact).

*4 When starting operation, always turn on EM2 (Forced stop 2). (normally closed contact)

*5 Use SW1DNC-MRC2-_.

*6 Use SSCNET III cables listed in the following table.

Cable	Cable model	Cable length
Standard cord inside cabinet	MR-J3BUS_M	0.15 m to 3 m
Standard cable outside cabinet	MR-J3BUS_M-A	5 m to 20 m
Long distance cable	MR-J3BUS_M-B	30 m to 50 m

*7 The wiring after the second servo amplifier is omitted.

*8 Up to 64 axes of servo amplifiers can be connected. The number of connectable axes depends on the specifications of the controller being used. For the axis selection setting, refer to "Switch setting and display of the servo amplifier" in the User's Manual (Introduction).

*9 Supply 24 V DC ± 10 % to interfaces from an external source. The total current capacity of these power supplies is 350 mA maximum for the MR-J5W2-_B and 450 mA maximum for the MRJ5W3-_B. These values are applicable when all I/O signals are used. Reducing the number of I/O points decreases the current capacity. For the current required for interfaces, refer to the following.
☞ Page 133 Digital input interface DI-1
Although the diagram shows the input signal and the output signal each using a separate 24 V DC power supply for illustrative purposes, the system can be configured to use a single 24 V DC power supply.

*10 CALM (AND malfunction) turns on in a normal state where no alarms have occurred. (normally closed contact)

*11 In the initial setting, CINP (AND in-position) is assigned to this pin. The device of the pin can be changed with [Pr. PD08].

*12 The devices of these pins can be changed with [Pr. PD07] and [Pr. PD09].

*13 Devices can be assigned to these pins with the controller setting. For the setting method, refer to each controller manual.

*14 To prevent an unexpected restart of the servo amplifier, configure a circuit that turns off EM2 when the main circuit power supply is turned off.

*15 If not using the STO function, attach the short-circuit connector that came with the servo amplifier.

*16 This pin cannot be used on MR-J5 2-axis servo amplifiers.

*17 The diagram is for the MR-J5 3-axis servo amplifier.

*18 This signal cannot be used for the MR-J5W3-_B.

*19 When using a linear servo motor or direct drive motor, use MBR (Electromagnetic brake interlock) for the external brake mechanism.

*20 This device is used for forced stop of the servo amplifier (common to all axes). Perform an emergency stop of the whole system on the controller side.

*21 Cover the unused CN1B connector with a cap.

Source I/O interface

Precautions

- For notes, refer to the notes in the following section.

☞ Page 65 Sink I/O interface

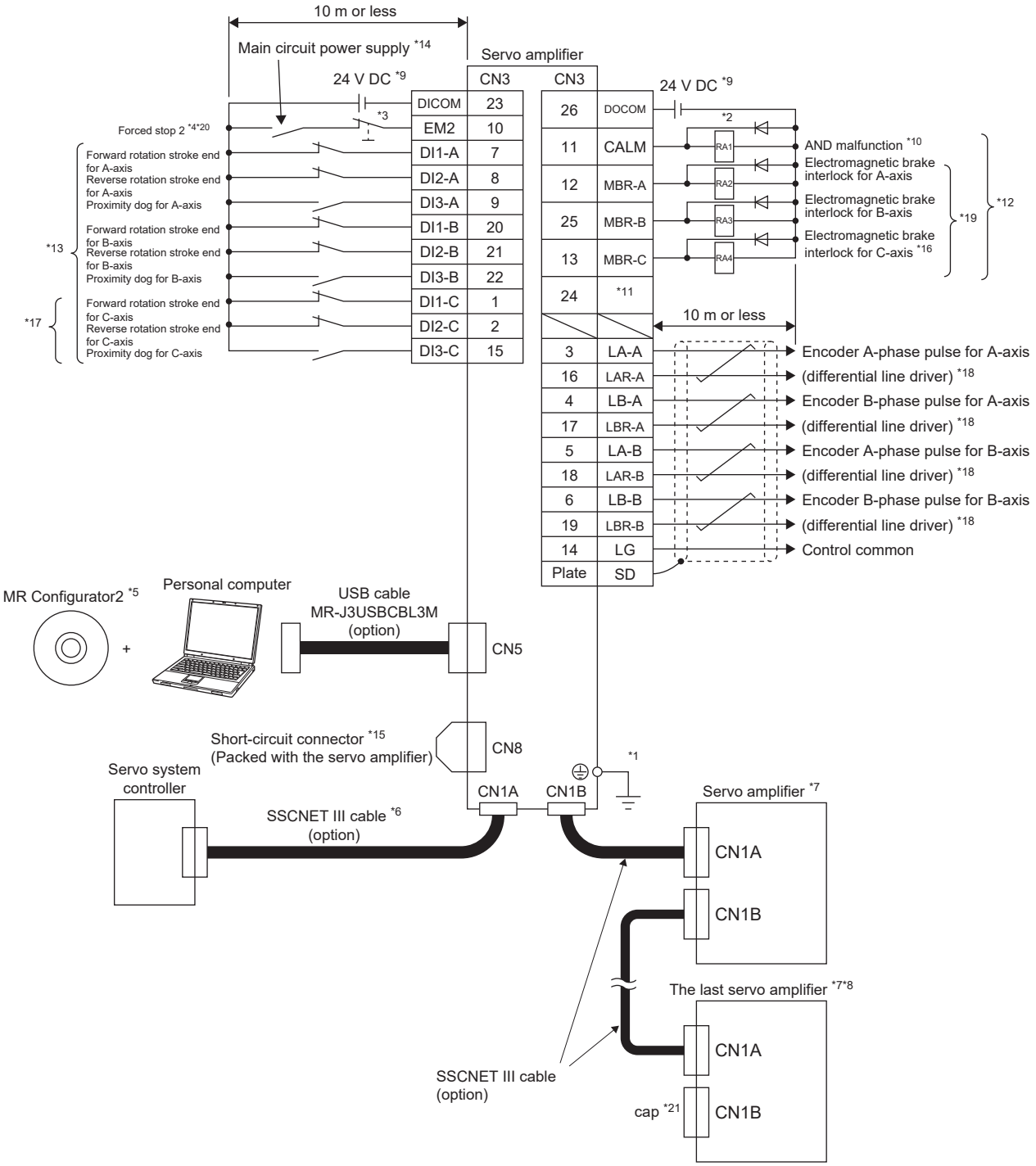

Position control mode

■Sink I/O interface

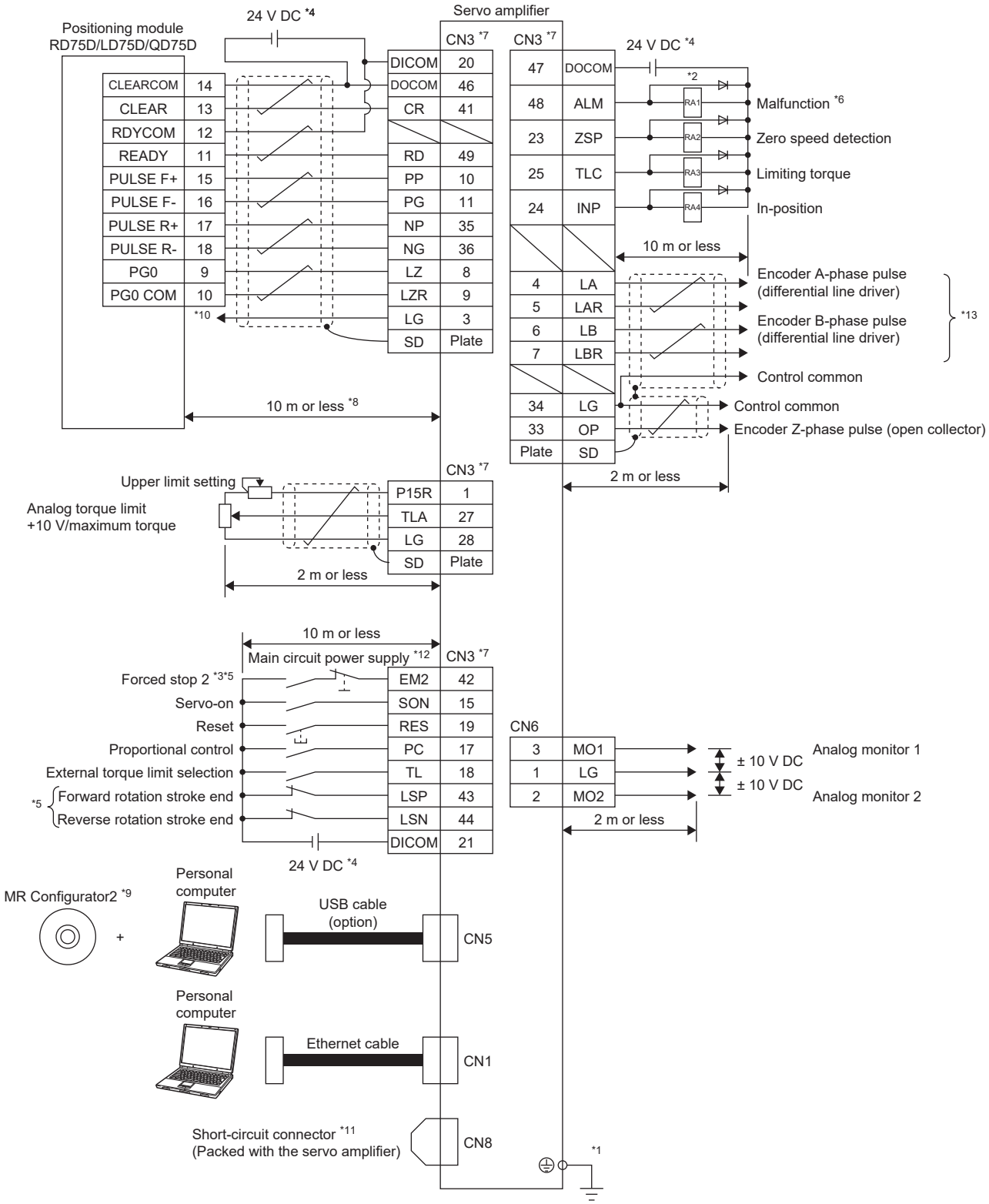

*1 To prevent an electric shock, connect the protective earth (PE) terminal (the terminal marked with the symbol) of the servo amplifier to the protective earth (PE) of the cabinet.⏚

*2 Connect the diode in the correct direction. If it is connected reversely, the servo amplifier may malfunction and not output signals, disabling protective circuits such as EM2 (Forced stop 2).

*3 Install a forced stop switch (normally closed contact).

*4 Supply 24 V DC ± 10 % to interfaces from an external source. The total current capacity of these power supplies is 500 mA maximum. This value is applicable when all I/O signals are used. Reducing the number of I/O points decreases the current capacity. For the current required for interfaces, refer to the following.

☞ Page 133 Digital input interface DI-1

Although the diagram shows the input signal and the output signal each using a separate 24 V DC power supply for illustrative purposes, the system can be configured to use a single 24 V DC power supply.

*5 When starting operation, turn on EM2 (Forced stop 2), LSP (Forward rotation stroke end), and LSN (Reverse rotation stroke end) (normally closed contact).

*6 If no alarm is occurring, ALM (Malfunction) is on (normally closed contact). If an alarm occurs, stop programmable controller's signals with a sequence program.

*7 The pins with the same signal name are connected in the servo amplifier.

*8 This length applies when the command pulse train input is the differential line driver type. In the case of the open-collector type, connect them within 2 m.

*9 Use SW1DNC-MRC2-_.

*10 This connection is not required when the positioning module is RD75D, LD75D, or QD75D. However, to enhance noise tolerance, it is recommended to connect LG of the servo amplifier and control common.

*11 If not using the STO function, attach the short-circuit connector that came with the servo amplifier.

*12 To prevent an unexpected restart of the servo amplifier, configure a circuit that turns off EM2 when the main circuit power supply is turned off.

*13 Noise or disconnection of the command cable connected to the controller may cause a position mismatch. To avoid the position mismatch, check the encoder A-phase pulse and encoder B-phase pulse on the controller side.

*14 For source interfaces, the positive and negative outputs of the power supply are reversed as compared with sink interfaces.

*15 For source interfaces, CLEAR and CLEARCOM are reversed as compared with sink interfaces.

■Source I/O interface

Precautions

- For notes, refer to the notes in the following section.

☞ Page 68 Sink I/O interface

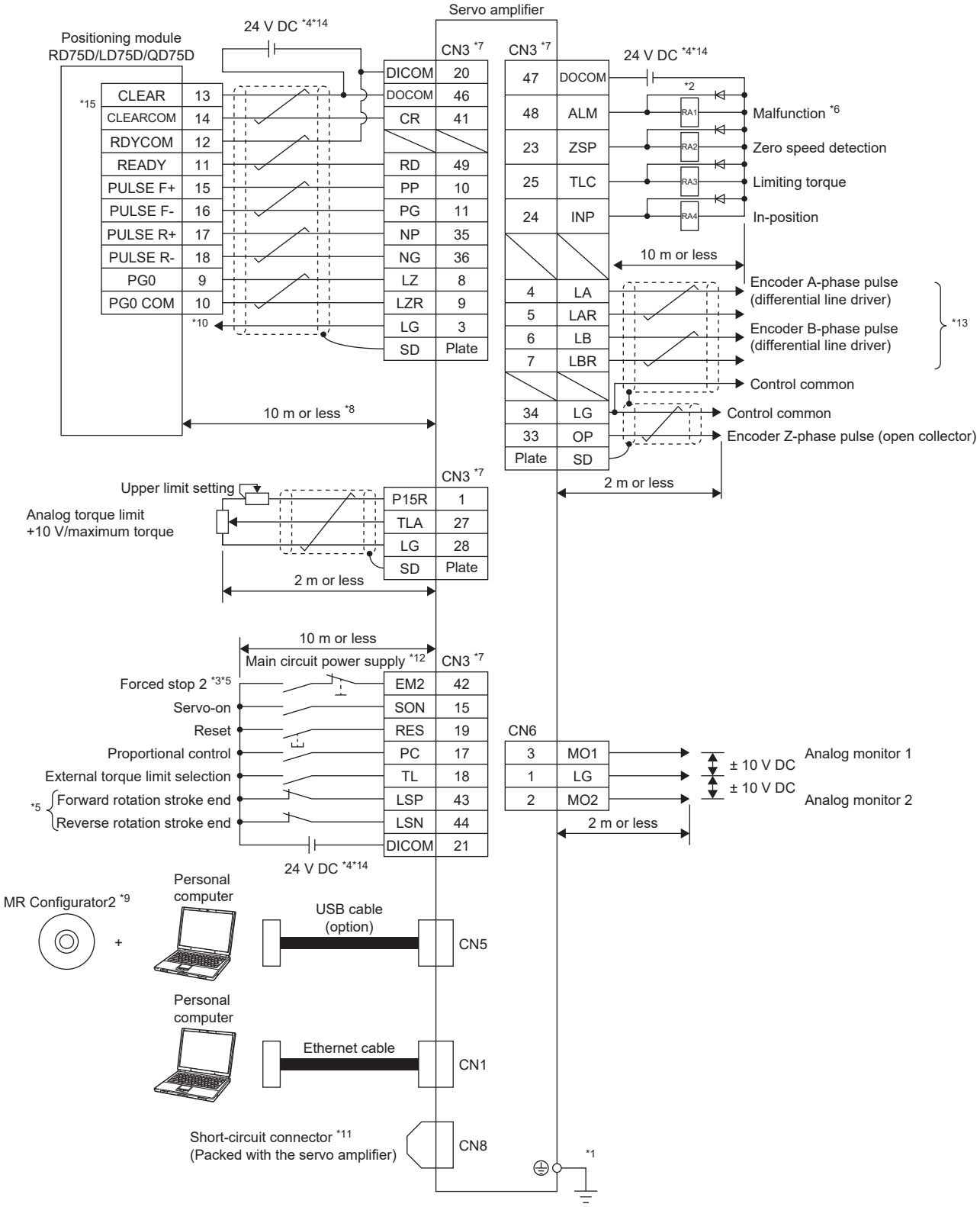

Speed control mode

■Sink I/O interface

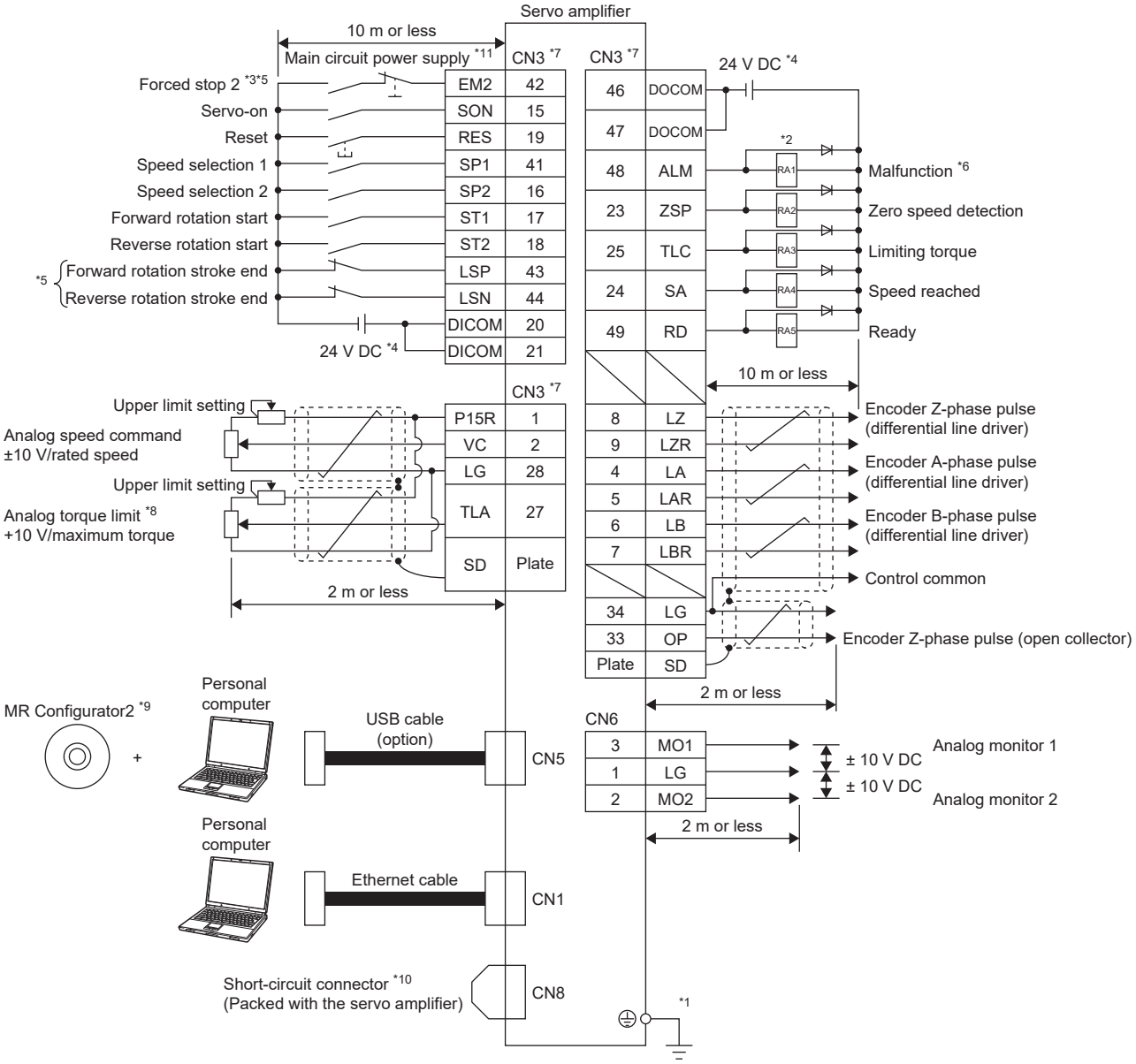

*1 To prevent an electric shock, connect the protective earth (PE) terminal (the terminal marked with the symbol) of the servo amplifier to the protective earth (PE) of the cabinet.⏚

*2 Connect the diode in the correct direction. If it is connected reversely, the servo amplifier may malfunction and not output signals, disabling protective circuits such as EM2 (Forced stop 2).

*3 Install a forced stop switch (normally closed contact).

*4 Supply 24 V DC ± 10 % to interfaces from an external source. The total current capacity of these power supplies is 500 mA maximum. This value is applicable when all I/O signals are used. Reducing the number of I/O points decreases the current capacity. For the current required for interfaces, refer to the following.
☞ Page 133 Digital input interface DI-1
Although the diagram shows the input signal and the output signal each using a separate 24 V DC power supply for illustrative purposes, the system can be configured to use a single 24 V DC power supply.

*5 When starting operation, turn on EM2 (Forced stop 2), LSP (Forward rotation stroke end), and LSN (Reverse rotation stroke end) (normally closed contact).

*6 If no alarm is occurring, ALM (Malfunction) is on (normally closed contact).

*7 The pins with the same signal name are connected in the servo amplifier.

*8 TLA will be available when TL (External torque limit selection) is enabled with servo parameters ([Pr. PD03] to [Pr. PD22]).
MR-J5 User's Manual (Function)

*9 Use SW1DNC-MRC2-_.

*10 If not using the STO function, attach the short-circuit connector that came with the servo amplifier.

*11 To prevent an unexpected restart of the servo amplifier, configure a circuit that turns off EM2 when the main circuit power supply is turned off.

*12 For source interfaces, the positive and negative outputs of the power supply are reversed as compared with sink interfaces.

■Source I/O interface

Precautions

- For notes, refer to the notes in the following section.

☞ Page 71 Sink I/O interface

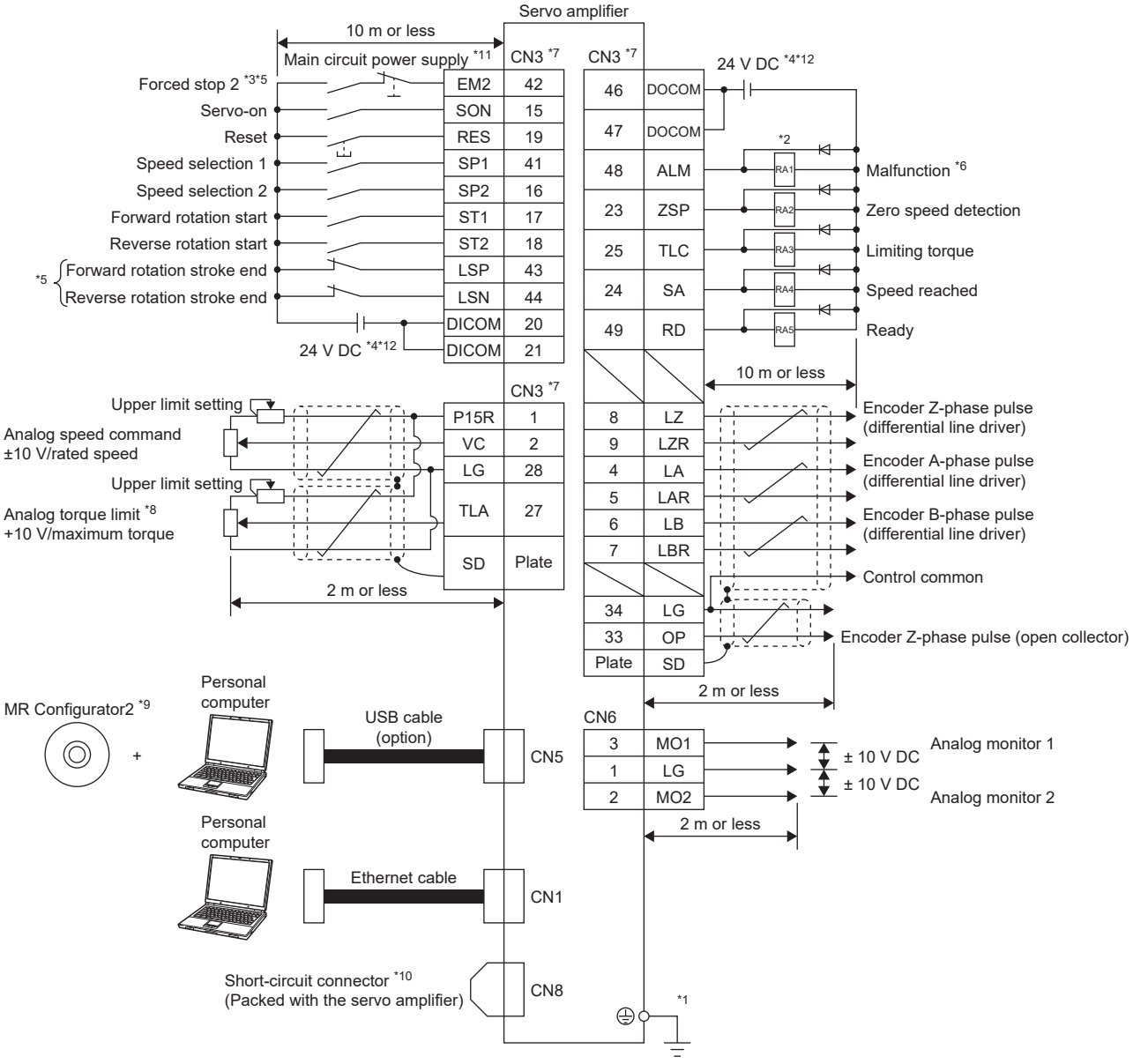

Torque control mode

■Sink I/O interface

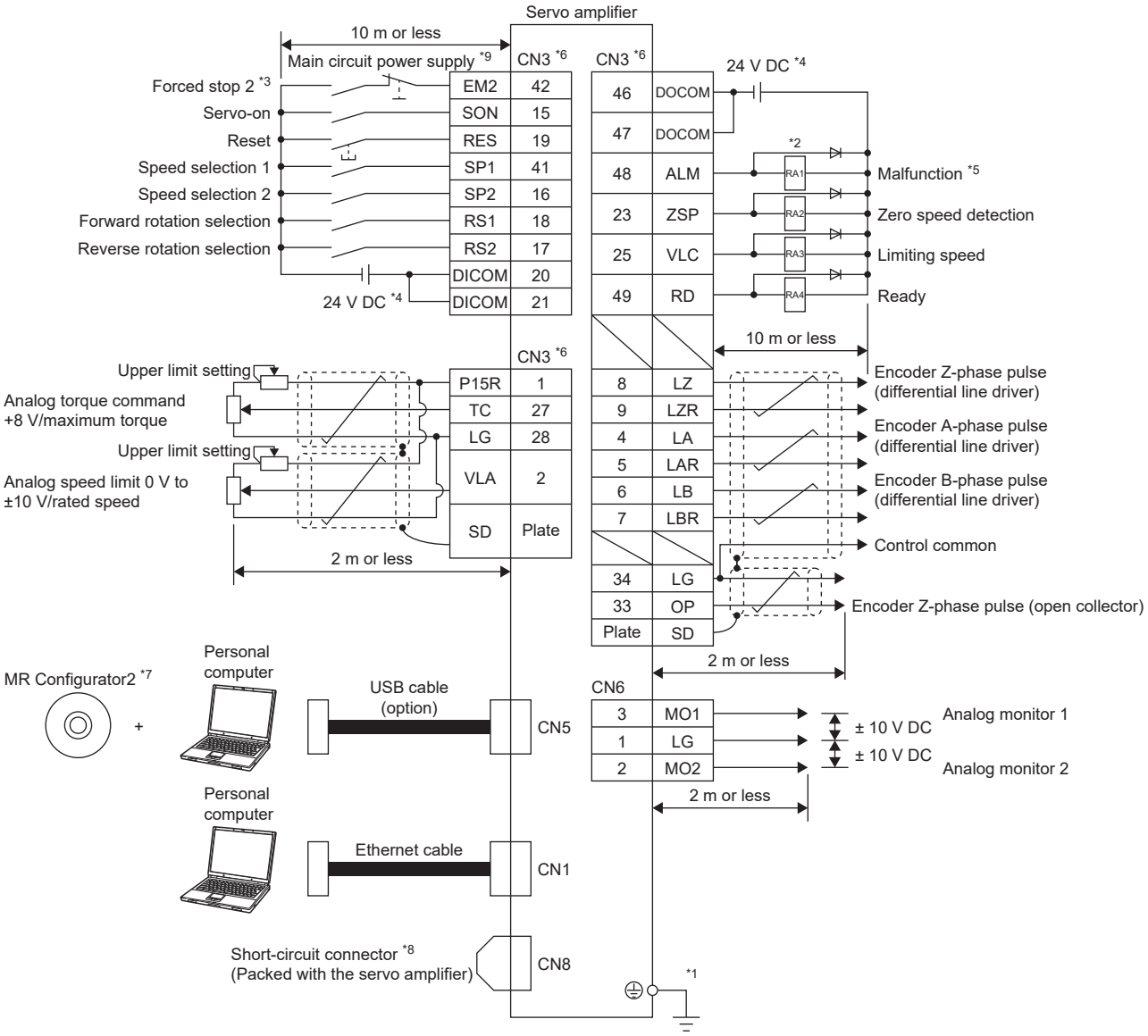

*1 To prevent an electric shock, connect the protective earth (PE) terminal (the terminal marked with the symbol) of the servo amplifier to the protective earth (PE) of the cabinet.

*2 Connect the diode in the correct direction. If it is connected reversely, the servo amplifier may malfunction and not output signals, disabling protective circuits such as EM2 (Forced stop 2).

*3 Install a forced stop switch (normally closed contact).

*4 Supply 24 V DC ± 10 % to interfaces from an external source. The total current capacity of these power supplies is 500 mA maximum. This value is applicable when all I/O signals are used. Reducing the number of I/O points decreases the current capacity. For the current required for interfaces, refer to the following.

☞ Page 133 Digital input interface DI-1

Although the diagram shows the input signal and the output signal each using a separate 24 V DC power supply for illustrative purposes, the system can be configured to use a single 24 V DC power supply.

*5 If no alarm is occurring, ALM (Malfunction) is on (normally closed contact).

*6 The pins with the same signal name are connected in the servo amplifier.

*7 Use SW1DNC-MRC2-_.

*8 If not using the STO function, attach the short-circuit connector that came with the servo amplifier.

*9 To prevent an unexpected restart of the servo amplifier, configure a circuit that turns off EM2 when the main circuit power supply is turned off.

*10 For source interfaces, the positive and negative outputs of the power supply are reversed as compared with sink interfaces.

■Source I/O interface

Precautions

- For notes, refer to the notes in the following section.

☞ Page 74 Sink I/O interface

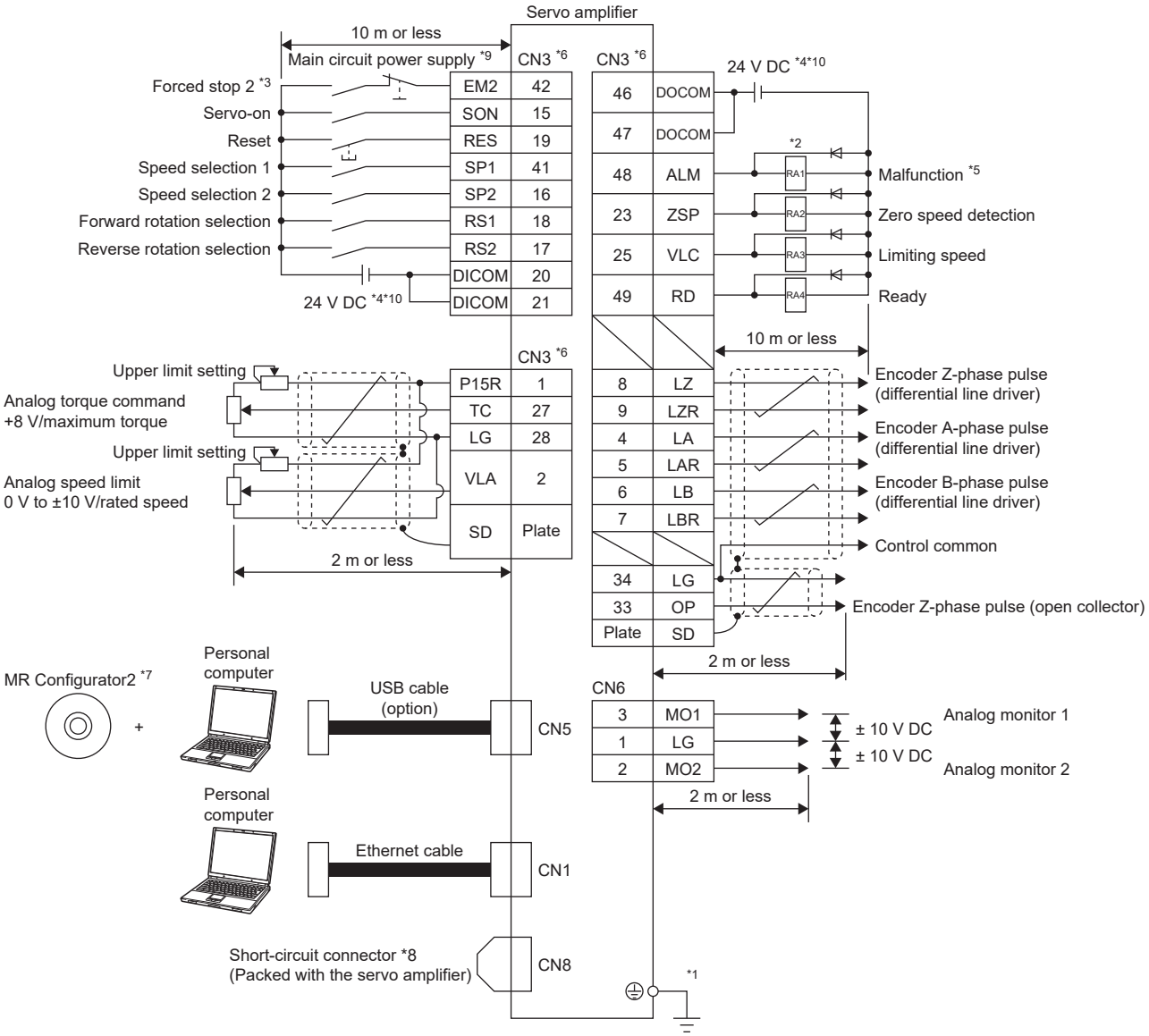

3.3 Explanation of power supply system

Explanation of signals

Point

- For the layout of connectors and terminal blocks, refer to the following.

☞ Page 144 DIMENSIONS

- If using the MR-J5 servo amplifier with the DC power supply input, refer to the following.

☞ Page 51 Using servo amplifier with DC power supply input

L1/L2/L3 (Connection destination: Main circuit power supply)

Supply the following power to L1, L2, and L3. For 1-phase 200 V AC to 240 V AC power supply, connect the power supply to L1 and L3. Leave L2 open.

Power supply	Servo amplifier				
	MR-J5-10_ to MR-J5-200_	MR-J5-350_ to MR-J5-700_	MR-J5W2-22_ to MR-J5W2-77_/ MR-J5W3-222_ to MR-J5W3-444_	MR-J5W2-1010_	MR-J5-60_4_ to MR-J5-350_4_/ MR-J5-500_4_/MR-J5-700_4_
3-phase 200 V AC to 240 V AC, 50 Hz/60 Hz	L1/L2/L3				—
1-phase 200 V AC to 240 V AC, 50 Hz/60 Hz	L1/L3	—	L1/L3	—	—
3-phase 380 V AC to 480 V AC, 50 Hz/60 Hz	—	—	—	—	L1/L2/L3

P3/P4 (Connection destination: Power factor improving DC reactor)

If not using the power factor improving DC reactor, connect P3 and P4. For the MR-J5-_G_ and MR-J5-_A_ servo amplifiers, P3 and P4 are connected from the factory.

If using the power factor improving DC reactor, disconnect P3 and P4, and connect the power factor improving DC reactor between P3 and P4.

P+/C/D (Connection destination: Regenerative option)

If using a servo amplifier built-in regenerative resistor, connect P+ and D. P+ and D are connected from the factory.

If using a regenerative option, disconnect P+ and D, and connect the regenerative option between P+ and C.

L11/L21 (Connection destination: Control circuit power supply)

Supply the following power to L11 and L21.

Power supply	Servo amplifier	
	MR-J5-10_ to MR-J5-700_/ MR-J5W2-22_ to MR-J5W2-1010_/ MR-J5W3-222_ to MR-J5W3-444_	MR-J5-60_4_ to MR-J5-350_4_/ MR-J5-500_4_/MR-J5-700_4_
1-phase 200 V AC to 240 V AC, 50 Hz/60 Hz	L11/L21	—
1-phase 380 V AC to 480 V AC, 50 Hz/60 Hz	—	L11/L21

U/V/W (Connection destination: Servo motor power supply)

Connect the servo motor power supply inputs (U/V/W) directly to the motor. Do not connect devices such as magnetic contactors between the motor and servo amplifier as this will lead to abnormal operation or malfunction.

N- (Connection destination: Simple converters and multifunction regeneration converters)

This terminal is used to connect a simple converter or a multifunction regeneration converter.

☞ Page 285 MR-CM simple converter

☞ Page 295 Multifunction regeneration converter (FR-XC-(H))

⏚ (Connection destination: Protective earth (PE))

Connect a servo amplifier to the grounding terminal of a servo motor and to the protective earth (PE) of a cabinet.

Power-on procedure [G] [B]

Point

Signals such as output signals may be unstable at power-on.

Power-on procedure

1. Wire the power supply using magnetic contactors for the main circuit power supply (L1/L2/L3) by referring to the following. Switch off the magnetic contactor as soon as an alarm occurs.

☞ Page 44 Example power circuit connections

2. Switch on the control circuit power supply (L11 and L21) simultaneously with the main circuit power supply or before switching on the main circuit power supply. If the control circuit power supply is turned on and the servo-on command is transmitted while the main circuit power supply is off, [AL. 0E9 Main circuit off warning] will occur. Turning on the main circuit power supply stops the warning and starts the operation properly.

3. When the main circuit power supply is switched on, the servo amplifier will receive the servo-on command after startup and initial network communication.

The startup time for 1-axis servo amplifiers is 2.5 s to 3.5 s, and the startup time for multi-axis servo amplifiers is 3.5 s to 4.0 s.

Timing chart

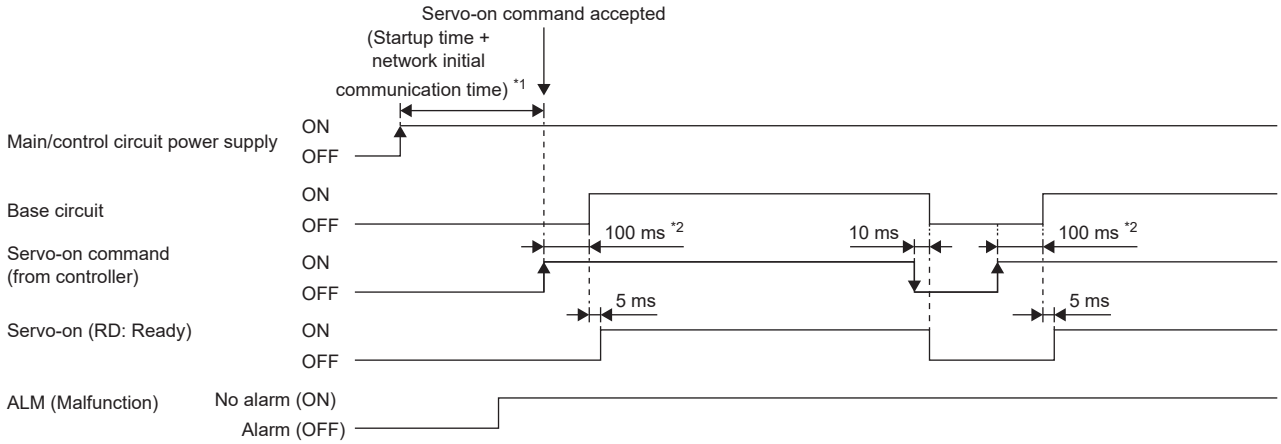

*1 For a linear servo system and a fully closed loop system, this time is 2 s longer.

*2 The time will be longer in the magnetic pole detection of a linear servo motor and direct drive motor.

Power-on procedure [A]

Point

The voltage of analog monitor output, the output signal, or others may be unstable at power-on.

Power-on procedure

1. Wire the power supply using magnetic contactors for the main circuit power supply (L1/L2/L3) by referring to the following. Switch off the magnetic contactor as soon as an alarm occurs.

☞ Page 44 Example power circuit connections

2. Switch on the control circuit power supply (L11 and L21) simultaneously with the main circuit power supply or before switching on the main circuit power supply. If the main circuit power supply is not on, the display shows the corresponding warning. However, the warning will disappear and the servo amplifier will operate properly if the main circuit is powered on.
3. The servo amplifier receives the SON (Servo-on) 2.5 s to 3.5 s after the main circuit power supply is powered on.
4. Once RES (Reset) is turned on, the base circuit is shut off and the servo motor shaft coasts.

Timing chart

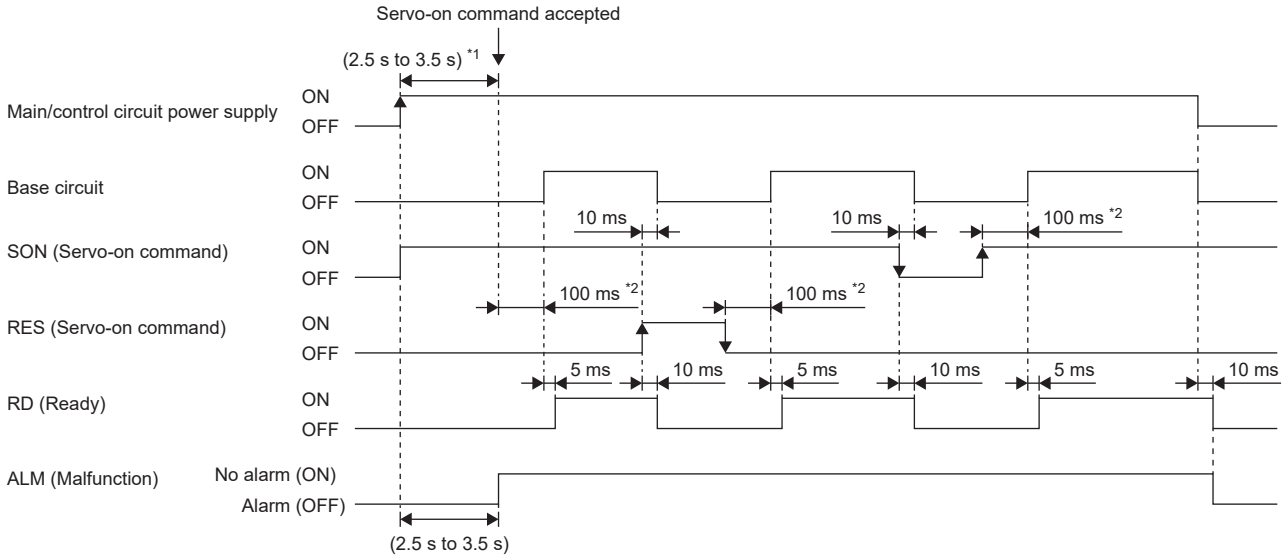

*1 For a linear servo system and a fully closed loop system, this time is "4.5 s to 5.5 s".

*2 The time will be longer in the magnetic pole detection of a linear servo motor and direct drive motor.

Wiring CNP1, CNP2, and CNP3

Point

- For the wire sizes, refer to the following.

☞ Page 326 Selection example of wires

- When wiring, remove the power connectors from the servo amplifier.
- Insert only one wire or ferrule into each wire insertion hole on each power connector.

To wire to CNP1, CNP2, and CNP3, use the servo amplifier power connectors that came with the amplifier.

Connector

■MR-J5-10_ to MR-J5-100_

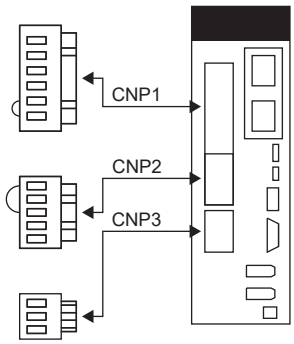

Connector	Receptacle assembly	Applicable wire		Stripped length [mm]	Open tool	Manufacturer
		Size	Insulator OD			
CNP1	06JFAT-SAXGDK-K7.5 (LA)	18 to 14 AWG	3.9 mm or less	9	J-FAT-OT-K	JST
CNP2	05JFAT-SAXGDK-K5.0 (LA)					
CNP3	03JFAT-SAXGDK-K7.5 (LA)					

■MR-J5-200_/MR-J5-350_

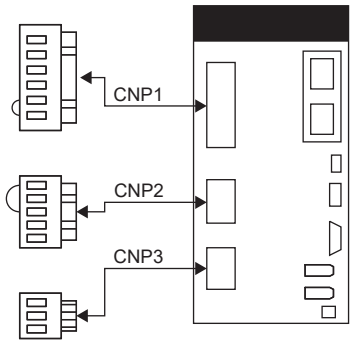

Connector	Receptacle assembly	Applicable wire		Stripped length [mm]	Open tool	Manufacturer
		Size	Insulator OD			
CNP1	06JFAT-SAXGFK-XL (LA)	16 to 10 AWG	4.7 mm or less	11.5	J-FAT-OT-EXL	JST
CNP2	05JFAT-SAXGDK-H5.0 (LA)	18 to 14 AWG	3.9 mm or less	9		
CNP3	03JFAT-SAXGFK-XL (LA)	16 to 10 AWG	4.7 mm or less	11.5		

■MR-J5-500_/MR-J5-700_

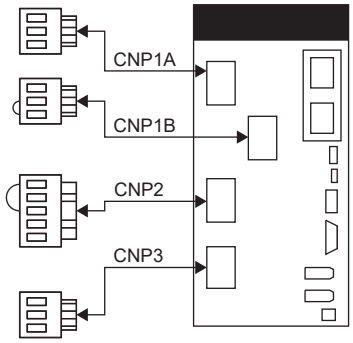

Connector	Receptacle assembly	Applicable wire		Stripped length [mm]	Open tool	Manufacturer
		Size	Insulator OD			
CNP1A	03JFAT-SAXGDK-P15 (LA)	18 to 8 AWG	7.6 mm or less	12	J-FAT-OT-P	JST
CNP1B	03JFAT-SAYGDK-P15 (LB)					
CNP2	05JFAT-SAXGDK-H5.0 (LA)	18 to 14 AWG	3.9 mm or less	9	J-FAT-OT (N)	
CNP3	03JFAT-SAZGDK-P15 (LC)	18 to 8 AWG	7.6 mm or less	12	J-FAT-OT-P	

■MR-J5W2-22_ to MR-J5W2-1010_ and MR-J5W3-222_ to MR-J5W3-444_

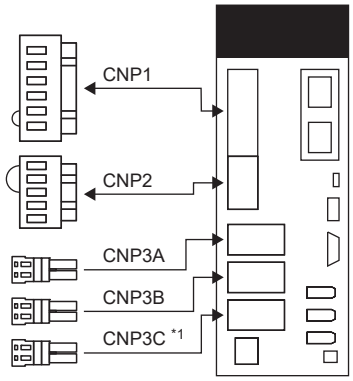

*1 The diagram is for the MR-J5W3-_G_ servo amplifier.

Connector	Receptacle assembly	Applicable wire		Stripped length [mm]	Open tool	Manufacturer
		Size	Insulator OD			
CNP1	06JFAT-SAXGDK-K7.5 (LB)	18 to 14 AWG	3.9 mm or less	9	J-FAT-OT-K	JST
CNP2	05JFAT-SAXGDK-K5.0 (LA)					
CNP3A	04JFAT-SAGG-G-KK	18 to 14 AWG				
CNP3B						
CNP3C						

■MR-J5W2-77_/MR-J5W2-1010_

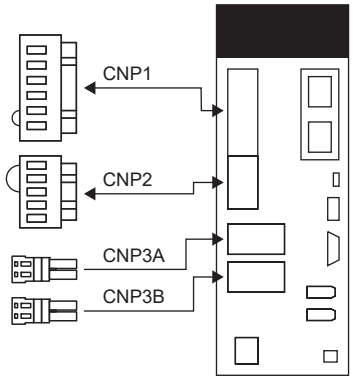

Connector	Receptacle assembly	Applicable wire		Stripped length [mm]	Open tool	Manufacturer
		Size	Insulator OD			
CNP1	06JFAT-SAXGFK-XL (LB)	16 to 10 AWG	4.7 mm or less	11.5	J-FAT-OT-EXL	JST
CNP2	05JFAT-SAXGDK-H5.0 (LA)	18 to 14 AWG	3.9 mm or less	9		
CNP3A CNP3B	04JFAT-SAGG-G-KK	18 to 14 AWG	3.9 mm or less	9		

■MR-J5-60_4_ to MR-J5-350_4_

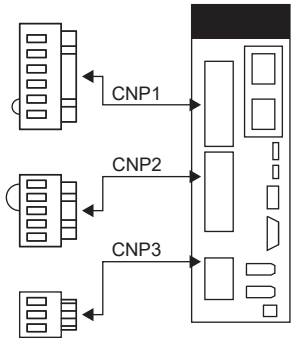

Connector	Receptacle assembly	Applicable wire		Stripped length [mm]	Open tool	Manufacturer
		Size	Insulator OD			
CNP1	06JFAT-SAXGDK-HT10.5 (LA)	18 to 14 AWG	3.9 mm or less	9	J-FAT-OT-XL	JST
CNP2	05JFAT-SAXGDK-HT7.5 (LA)					
CNP3	03JFAT-SAXGDK-HT10.5 (LA)					

■MR-J5-500_4_/MR-J5-700_4_

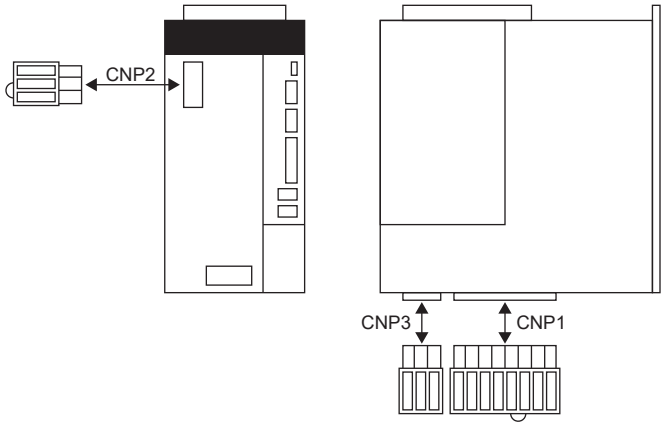

Connector	Receptacle assembly	Applicable wire		Stripped length [mm]	Open tool	Manufacturer
		Size	Insulator OD			
CNP1	831-1108/MNC	20 to 8 AWG	6.6 mm or less	11 to 13	—	WAGO
CNP2	831-1103/MNB					
CNP3	831-1103/MNA					

Connecting wires

■Fabricating the wire insulator

Refer to the following for the stripped length of the wire insulator. Set the appropriate length based on the wire type and fabrication condition.

☞ Page 80 Connector

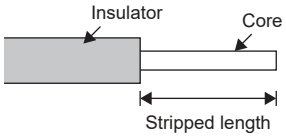

Twist the core wires lightly and straighten them as follows.

Loose and bent strands

Twist and straighten the strands.

A ferrule can also be used when connecting to the connectors. If using a ferrule, choose from one of the ferrules and the crimping tools shown below.

• For the ferrule by Phoenix Contact

Servo amplifier	Wire size	Ferrule model		Crimping tool
		For one wire *1	For two wires *1	
MR-J5-10_ to MR-J5-100_ MR-J5W2-_ MR-J5W3-_	16 AWG	AI 1, 5 -10_	AI-TWIN 2X 1, 5 -10_	CRIMPFOX-ZA3
	14 AWG	AI 2, 5 -10_	—	
MR-J5-200_ to MR-J5-350_	16 AWG	AI 1, 5 -10_	AI-TWIN 2X 1, 5 -10_	
	14 AWG	AI 2, 5 -10_	AI-TWIN 2X 2, 5 -10_	
	12 AWG	AI 4 -10_	—	
MR-J5-500_	10 AWG	AI 6 -12_	—	
MR-J5-700_	8 AWG	AI 10 -12_	—	CRIMPFOX-25R
MR-J5-60_4_ to MR-J5-350_4_	16 AWG	AI 1, 5 -10_	AI-TWIN 2X 1, 5 -10_	CRIMPFOX-ZA3
	14 AWG	AI 2, 5 -10_	—	
MR-J5-500_4_ to MR-J5-700_4_	14 AWG	AI 2, 5 -12_	—	CRIMPFOX 6
	12 AWG	AI 4 -12_	—	
	10 AWG	AI 6 -12_	—	CRIMPFOX ZA3

*1 A symbol (2 alphabetic characters) indicating the color code is placed in "_" in the ferrule model. Refer to the catalog by the manufacturer for details of the color code.

• For the ferrule by WAGO

Servo amplifier	Wire size	Ferrule model	Crimping tool
		For one wire	
MR-J5-500_4_ to MR-J5-700_4_	14 AWG	216-266	Variocrimp 4
	12 AWG	216-267	
	10 AWG	216-208	Variocrimp 16

■Inserting wire (MR-J5-10_ to MR-J5-700_/MR-J5-60_4_ to MR-J5-350_4_/MR-J5W _-_)

Insert only one wire or ferrule into each wire insertion hole on each power connector.

Insert the open tool as follows and push it down to open the spring.

While the open tool is pushed down, insert the stripped wire into the wire insertion hole. Check the wire insertion depth so that the wire insulator is not caught by the spring and that the conductive part of the stripped wire is not exposed.

Release the open tool to fix the wire. Pull the wire lightly to confirm that the wire is surely connected. In addition, confirm that the ends of the core wires do not stick out of the connector.

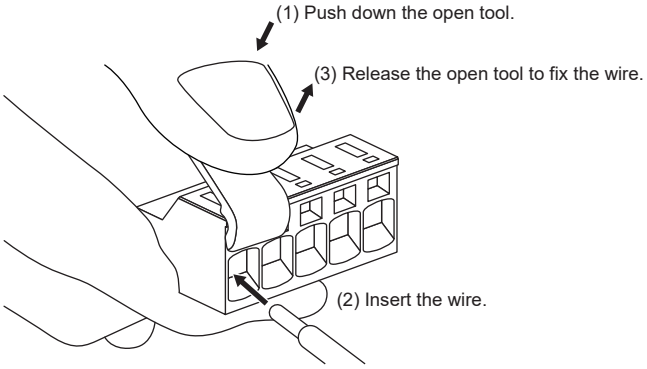

■Inserting wire (MR-J5-500_4_, MR-J5-700_4_)

• For stranded wire connection

Insert only one wire or ferrule into each wire insertion hole on each power connector.

1. Push the lever up until it clicks.

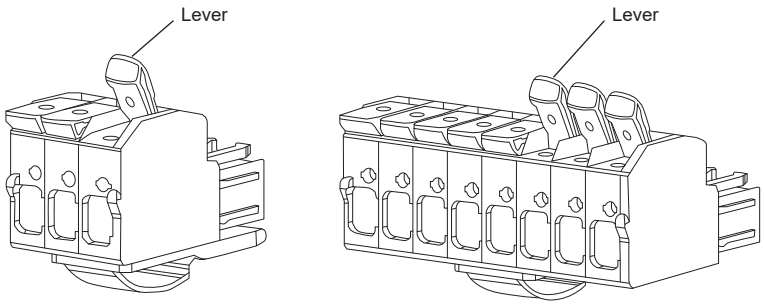

2. Insert a properly stripped wire into the wire insertion hole.

The recommended wire strip length is 11 mm to 13 mm.

Check the wire insertion depth so that the wire insulator is not caught by the spring and that the conductive part of the stripped wire is not exposed.

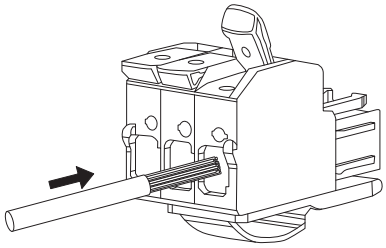

3. Push the lever down until it clicks to fix the wire.

Pull the wire lightly to confirm that the wire is surely connected.

In addition, confirm that the ends of the core wires do not stick out of the connector.

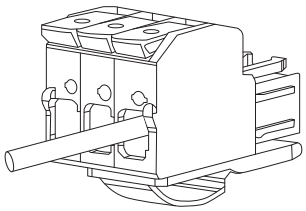

• For solid wire or treated-tip wire

A solid wire or treated-tip wire can be inserted with the lever closed.

If the wiring cannot be performed as shown in the following procedure, perform the wiring following "For stranded wire connection".

1. Fully insert a solid wire or treated-tip wire into the wire insertion hole.

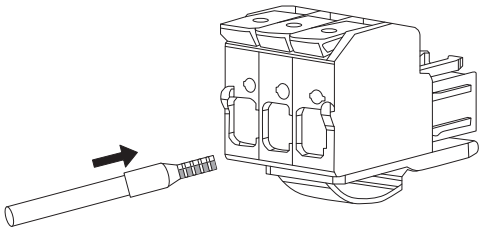

2. Pull the wire lightly to confirm that the wire is surely connected.

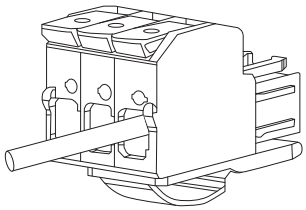

3.4 Connectors and pin assignments

Precautions

- The pin assignments of the connectors are as viewed from the cable connector wiring section.
- For information on the functional safety I/O signal connector (CN8), refer to the following page:

☞ Page 447 USING STO FUNCTION

- For wiring to the I/O signal connector (CN3), securely connect the external conductor of the shielded cable to the ground plate and fix it to the connector shell.

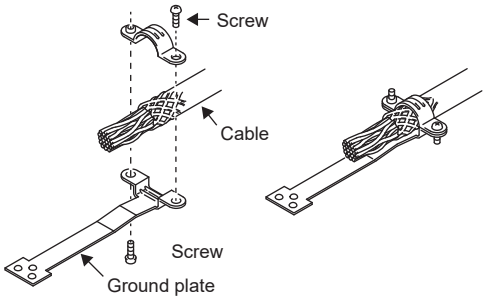

Connectors and pin assignments [G]

1-axis servo amplifier

■MR-J5-_G_ (excluding MR-J5-_G_-HS_)

The front view of the servo amplifier shown below is of MR-J5-60G-RJ_ servo amplifiers. Refer to the following for the appearance and connector layout of the other servo amplifiers.

☞ Page 144 DIMENSIONS

The frames of the CN2 connector, CN2L connector, CN3 connector, and CN8 connector are connected to the protective earth (grounding) terminal in the servo amplifier.

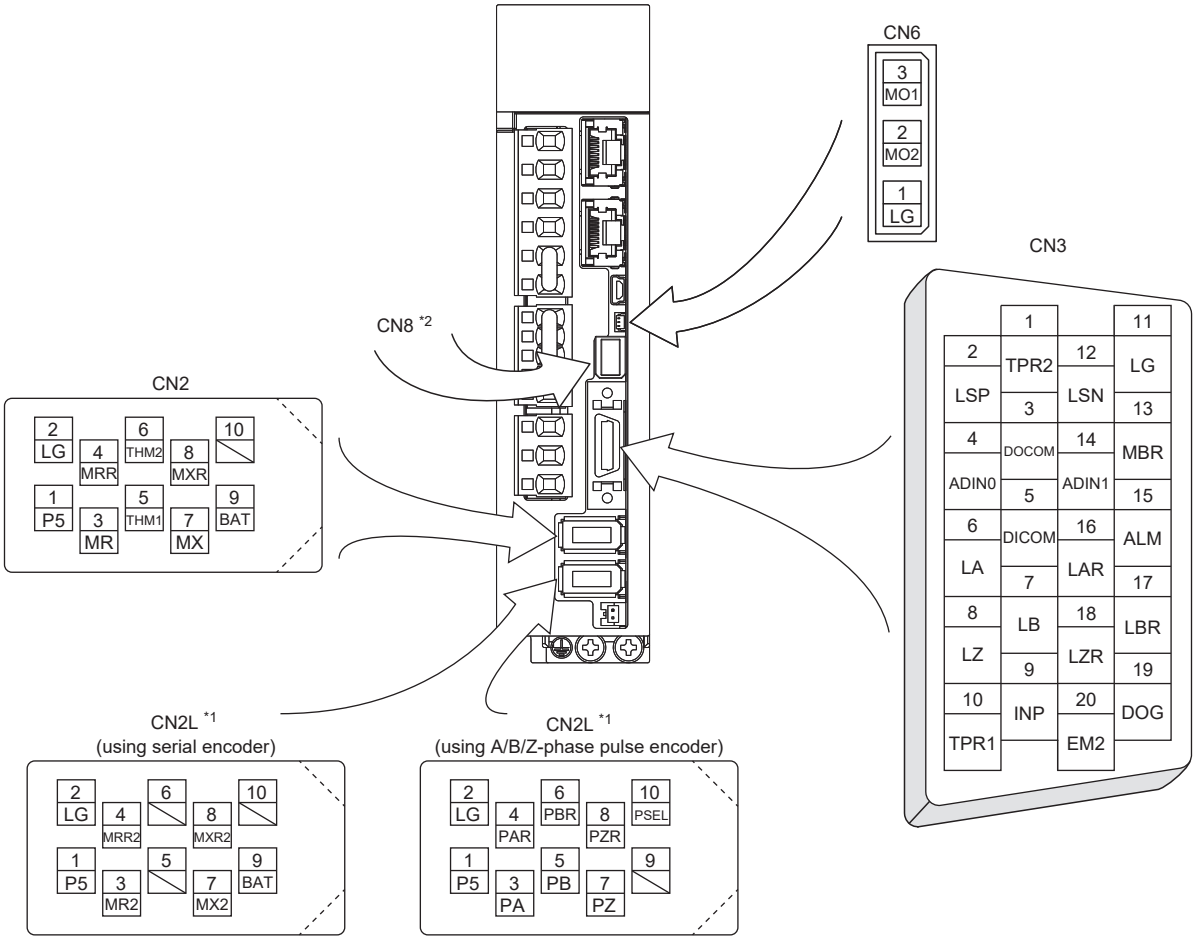

*1 This is an example of when the servo amplifier has a CN2L connector.

*2 Refer to the following for CN8.

☞ Page 450 Functional safety I/O signal connector (CN8) and pin assignments

■MR-J5-_G_-HS_

The front view of the servo amplifier shown below is of MR-J5-500G4-HS_ servo amplifiers. Refer to the following for the appearance and connector layout of the other servo amplifiers.

☞ Page 144 DIMENSIONS

The frames of the CN2 connector, CN2L connector, and CN7 connector are connected to the protective earth (grounding) terminal in the servo amplifier.

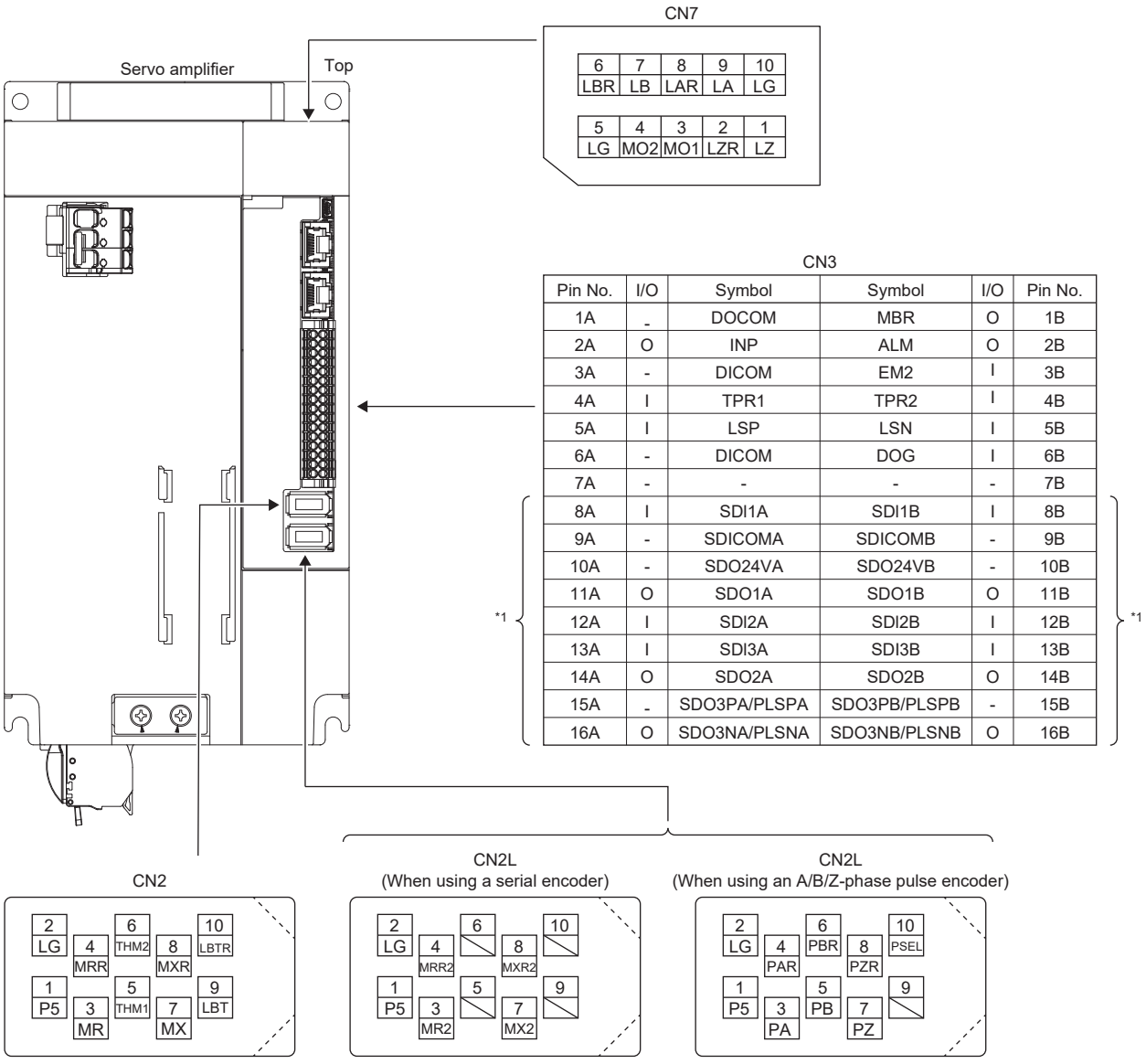

CN3

Pin No.	I/O	Symbol	Symbol	I/O	Pin No.
1A	_	DOCOM	MBR	O	1B
2A	O	INP	ALM	O	2B
3A	-	DICOM	EM2	I	3B
4A	I	TPR1	TPR2	I	4B
5A	I	LSP	LSN	I	5B
6A	-	DICOM	DOG	I	6B
7A	-	-	-	-	7B
8A	I	SDI1A	SDI1B	I	8B
9A	-	SDICOMA	SDICOMB	-	9B
10A	-	SDO24VA	SDO24VB	-	10B
11A	O	SDO1A	SDO1B	O	11B
12A	I	SDI2A	SDI2B	I	12B
13A	I	SDI3A	SDI3B	I	13B
14A	O	SDO2A	SDO2B	O	14B
15A	_	SDO3PA/PLSPA	SDO3PB/PLSPB	-	15B
16A	O	SDO3NA/PLSNA	SDO3NB/PLSNB	O	16B

*1 Refer to the following for details on these I/O signals.

☞ Page 478 Connectors and pin assignments

Multi-axis servo amplifier

The front view of the servo amplifier shown below is of MR-J5W3-222G_ servo amplifiers. Refer to the following for the appearance and connector layout of the other servo amplifiers.

☞ Page 144 DIMENSIONS

The frames of the CN2A connector, CN2B connector, CN2C connector, CN3 connector, and CN8 connector are connected to the protective earth (grounding) terminal in the servo amplifier.

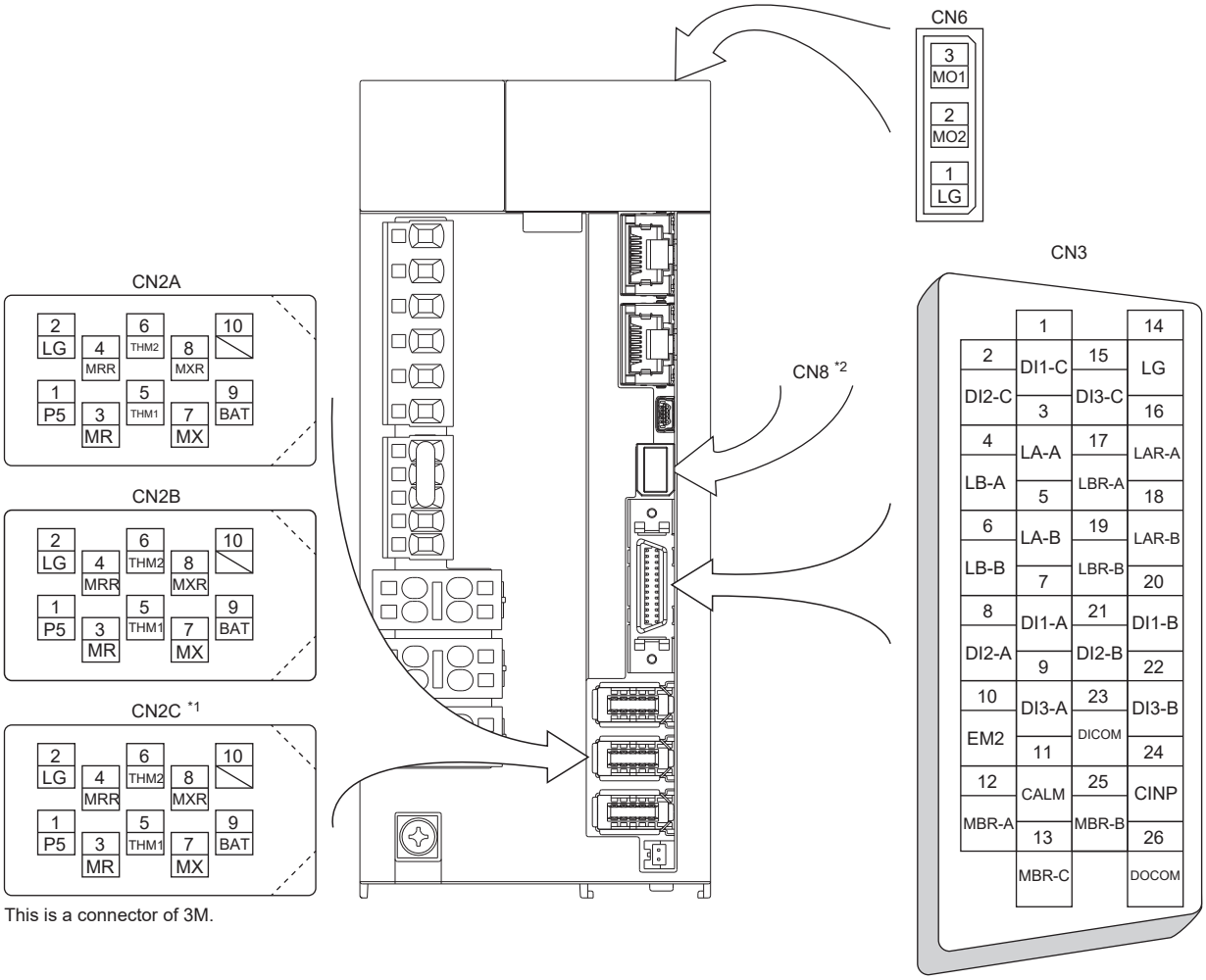

This is a connector of 3M.

*1 The diagram is for the MR-J5W3-_G_ servo amplifier.

*2 Refer to the following for CN8.

☞ Page 450 Functional safety I/O signal connector (CN8) and pin assignments

Mounting/removing the CN3 connector (MR-J5-_G_-HS_)

■Lock/release lever position

To facilitate the mounting/removal of the CN3 connector, a three-step positioning stopper is provided to prevent the lever from rotating freely.

When mounting or removing the CN3 connector, move the lever to the lock/release position.

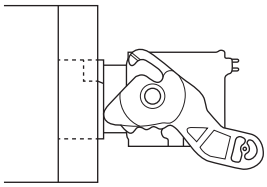

Lever position to release

■Release lever position

When the lever is at this position, the connector is completely pulled out of the unit. Rotate the lever from the lock position to the release position to lift the terminal block off the unit.

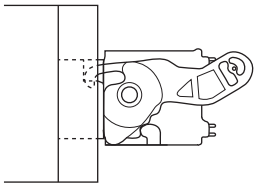

Lever position to lock

■Lock lever position

When the lever is at this position, the connector is fully mated with the unit. Check the lock lever position and lightly pull the connector to confirm that the servo amplifier and connector are fully mated.

■Mounting procedure

Set the lever to the release position and push it to the terminal block. When the lever is fully pushed in, the tab on the lever engages the unit and they mate with the terminal block.

■Removal procedure

Rotate the lever to the release position and remove the connector from the unit.

Point

The connector can be easily removed from the servo amplifier by inserting a flat head screwdriver with a tip width of 2.0 mm to 3.5 mm into the groove on the lever, pushing the screwdriver up, and rotating the lever to the release position.

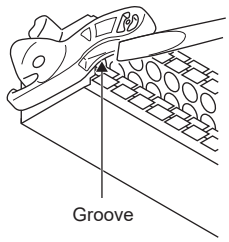

After inserting the flat head screwdriver to the slot of the lever, confirm that the lever is at the lock position.

Precautions

When mounting the CN3 connector, confirm that the lever is at the release position. If the mounting is performed with the lever at the lock position, the lever may be damaged.

Inserting a wire to the CN3 connector (MR-J5-_G_-HS_)

Since the CN3 connector is a push-in type, wiring can be performed without tools simply by inserting the connection terminal into the wire insertion hole.

When stranded wires are used, tools are required for wire connection since push-in is not supported.

■Inserting wire

Fully insert a stripped wire or ferrule into the wire insertion hole.

If they cannot be inserted with this method, use a flat head screwdriver with a tip width of 2.0 mm to 2.5 mm to hold down the open/close button and push the wire or ferrule all the way seated in the hole. When the wire or ferrule is fully inserted, remove the driver.

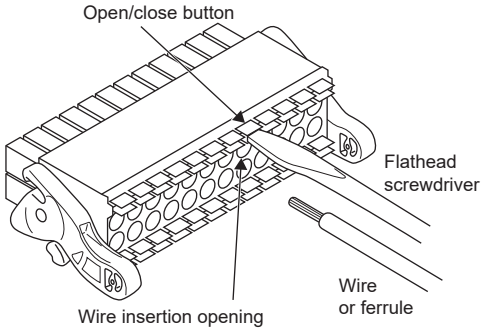

Precautions

- Pull the wire or ferrule lightly to confirm that the wire or ferrule is securely connected.
- When performing wiring using thick wires, do not expose the conductive parts to the front surface.

■Removing wire

Using a flat head screwdriver with a tip width of 2.0 mm to 2.5 mm, hold down the open/close button and pull out the wire or ferrule.

Connectors and pin assignments [B]

1-axis servo amplifier

■MR-J5-_B_

The front view of the servo amplifier shown below is of MR-J5-10B-RJ_ servo amplifiers. Refer to the following for the appearance and connector layout of the other servo amplifiers.

☞ Page 144 DIMENSIONS

The frames of the CN2 connector, CN2L connector, CN3 connector, and CN8 connector are connected to the protective earth (grounding) terminal in the servo amplifier.

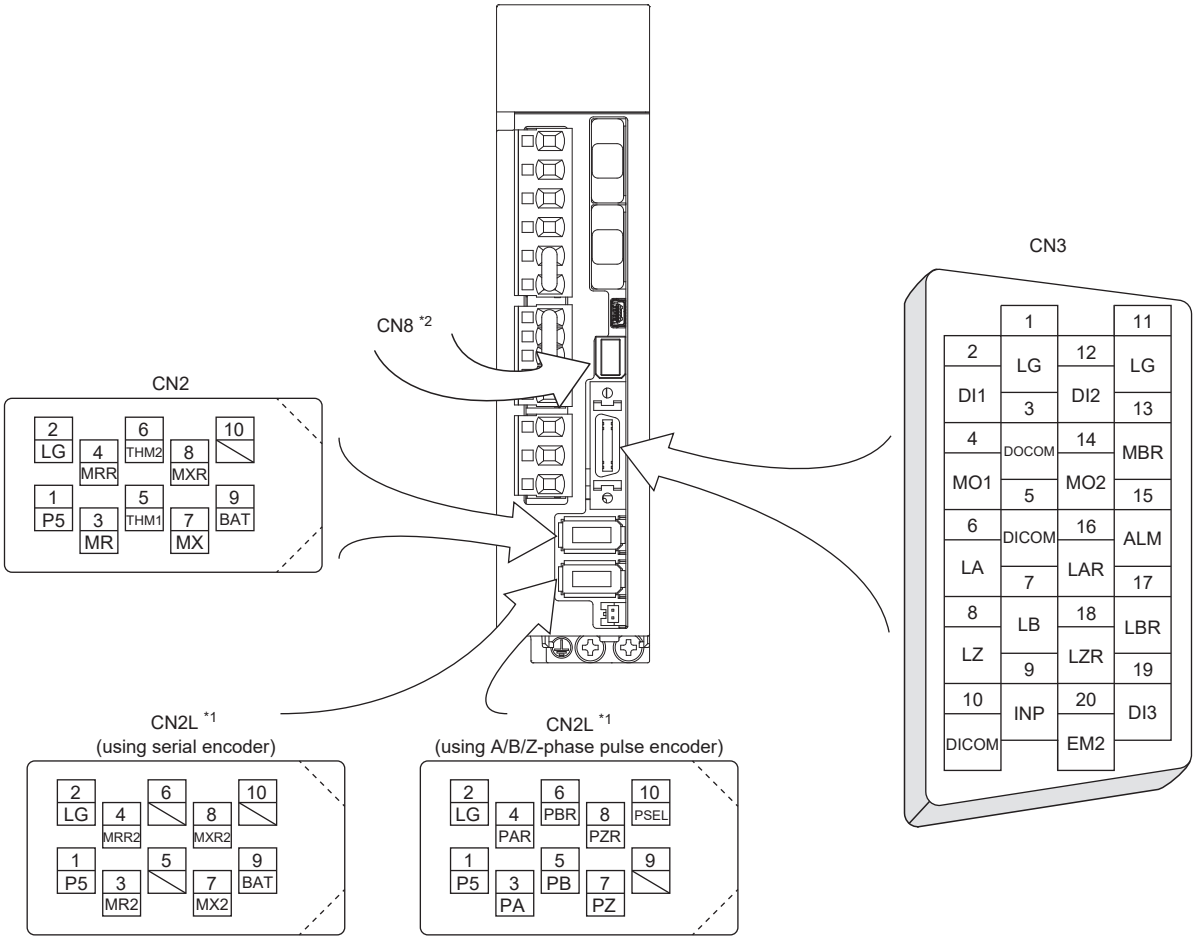

*1 This is an example of when the servo amplifier has a CN2L connector.

*2 Refer to the following for CN8.

☞ Page 450 Functional safety I/O signal connector (CN8) and pin assignments

Multi-axis servo amplifier

The front view of the servo amplifier shown below is of MR-J5W3-222B_ servo amplifiers. Refer to the following for the appearance and connector layout of the other servo amplifiers.

☞ Page 144 DIMENSIONS

The frames of the CN2A connector, CN2B connector, CN2C connector, CN3 connector, and CN8 connector are connected to the protective earth (grounding) terminal in the servo amplifier.

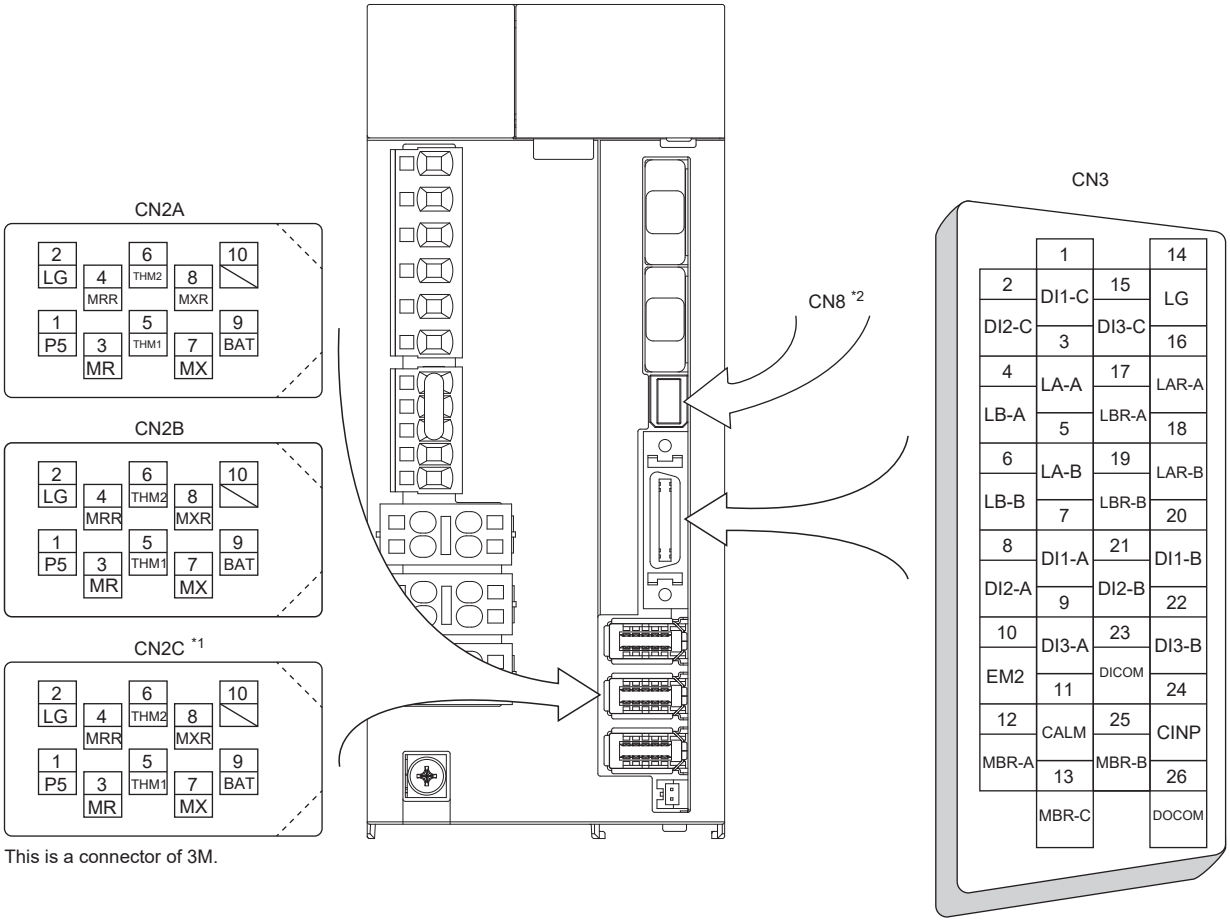

This is a connector of 3M.

*1 The diagram is for the MR-J5W3-_B_ servo amplifier.

*2 Refer to the following for CN8.

☞ Page 450 Functional safety I/O signal connector (CN8) and pin assignments

Connectors and pin assignments [A]

The front view of the servo amplifier shown below is of MR-J5-60A-RJ_ servo amplifiers. Refer to the following for the appearance and connector layout of the other servo amplifiers.

☞ Page 144 DIMENSIONS

The frames of the CN2 connector, CN2L connector, CN3 connector, and CN8 connector are connected to the protective earth (grounding) terminal in the servo amplifier.

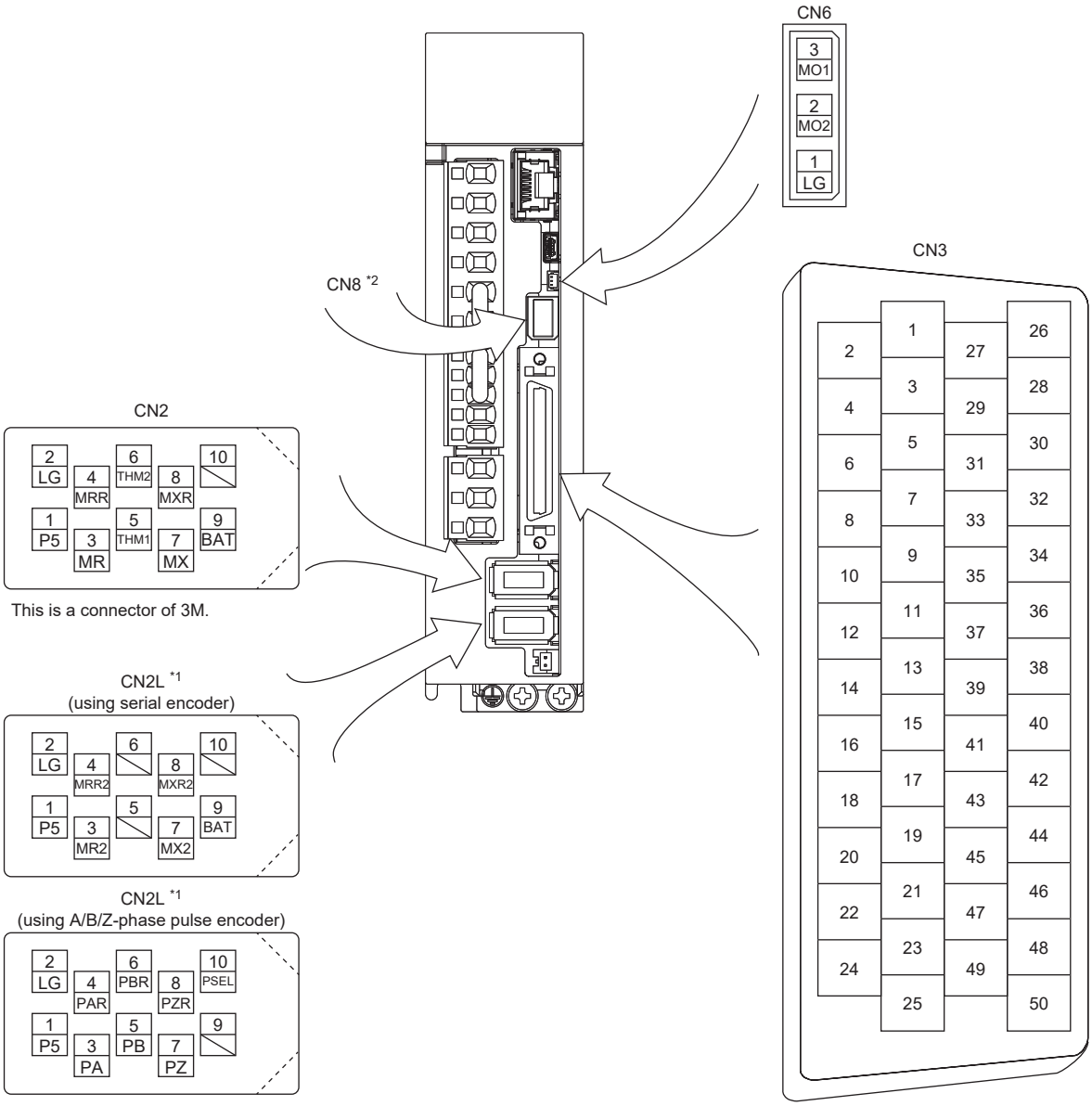

*1 The MR-J5-_A_ servo amplifier does not have the CN2L connector.

*2 Refer to the following for CN8.

☞ Page 450 Functional safety I/O signal connector (CN8) and pin assignments

The device assignment of the CN3 connector pins changes depending on the control mode. The device of each pin which has servo parameters stated in the related servo parameter column can be changed using the stated servo parameters.

Initial assignment of CN3 connector pins

Pin No.	I/O [*1]	I/O signal in each control mode [*2]						Related servo parameter
		P	P/S	S	S/T	T	T/P	
1	—	P15R	P15R	P15R	P15R	P15R	P15R	—
2	I	—	-/VC	VC	VC/VLA	VLA	VLA/-	—
3	—	LG	LG	LG	LG	LG	LG	—
4	O	LA	LA	LA	LA	LA	LA	—
5	O	LAR	LAR	LAR	LAR	LAR	LAR	—
6	O	LB	LB	LB	LB	LB	LB	—
7	O	LBR	LBR	LBR	LBR	LBR	LBR	—
8	O	LZ	LZ	LZ	LZ	LZ	LZ	—
9	O	LZR	LZR	LZR	LZR	LZR	LZR	—
10	I	PP	PP/-	[*4]	[*4]	[*4]	-/PP	—
11	I	PG	PG/-	—	—	—	-/PG	—
12	—	OPC	OPC/-	—	—	—	-/OPC	—
13	O	[*3]	[*3]	[*3]	[*3]	[*3]	[*3]	—
14	O	[*3]	[*3]	[*3]	[*3]	[*3]	[*3]	—
15	I	SON	SON	SON	SON	SON	SON	[Pr. PD03]/[Pr. PD04]
16	I	—	-/SP2	SP2	SP2/SP2	SP2	SP2/-	[Pr. PD05]/[Pr. PD06]
17	I	PC	PC/ST1	ST1	ST1/RS2	RS2	RS2/PC	[Pr. PD07]/[Pr. PD08]
18	I	TL	TL/ST2	ST2	ST2/RS1	RS1	RS1/TL	[Pr. PD09]/[Pr. PD10]
19	I	RES	RES	RES	RES	RES	RES	[Pr. PD11]/[Pr. PD12]
20	—	DICOM	DICOM	DICOM	DICOM	DICOM	DICOM	—
21	—	DICOM	DICOM	DICOM	DICOM	DICOM	DICOM	—
22	O	INP	INP/SA	SA	SA/-	—	-/INP	[Pr. PD23]
23	O	ZSP	ZSP	ZSP	ZSP	ZSP	ZSP	[Pr. PD24]
24	O	INP	INP/SA	SA	SA/-	—	-/INP	[Pr. PD25]
25	O	TLC	TLC	TLC	TLC/VLC	VLC	VLC/TLC	[Pr. PD26]
26	—	—	—	—	—	—	—	—
27	I	TLA	TLA	TLA	TLA/TC	TC	TC/TLA	—
28	—	LG	LG	LG	LG	LG	LG	—
29 [*6]	O	SDP	SDP	SDP	SDP	SDP	SDP	—
30	—	LG	LG	LG	LG	LG	LG	—
31 [*6]	I	TRE	TRE	TRE	TRE	TRE	TRE	—
32 [*6]	O	SDN	SDN	SDN	SDN	SDN	SDN	—
33	O	OP	OP	OP	OP	OP	OP	—
34	—	LG	LG	LG	LG	LG	LG	—
35	I	NP	NP/-	[*4]	[*4]	[*4]	-/NP	—
36	I	NG	NG/-	—	—	—	-/NG	—
37	I	PP2	PP2/-	[*5]	[*5]	[*5]	-/PP2	—
38	I	NP2	NP2/-	[*5]	[*5]	[*5]	-/NP2	—
39 [*6]	I	RDP	RDP	RDP	RDP	RDP	RDP	—
40 [*6]	I	RDN	RDN	RDN	RDN	RDN	RDN	—
41	I	CR	CR/SP1	SP1	SP1/SP1	SP1	SP1/CR	[Pr. PD13]/[Pr. PD14]
42	I	EM2	EM2	EM2	EM2	EM2	EM2	[Pr. PD15]/[Pr. PD16]
43	I	LSP	LSP	LSP	LSP/-	—	-/LSP	[Pr. PD17]/[Pr. PD18]
44	I	LSN	LSN	LSN	LSN/-	—	-/LSN	[Pr. PD19]/[Pr. PD20]
45	I	LOP	LOP	LOP	LOP	LOP	LOP	[Pr. PD21]/[Pr. PD22]
46	—	DOCOM	DOCOM	DOCOM	DOCOM	DOCOM	DOCOM	—
47	—	DOCOM	DOCOM	DOCOM	DOCOM	DOCOM	DOCOM	—
48	O	ALM	ALM	ALM	ALM	ALM	ALM	—
49	O	RD	RD	RD	RD	RD	RD	[Pr. PD49]
50	—	—	—	—	—	—	—	—

*1 I: input signal, O: output signal
*2 P: Position control mode, S: Speed control mode, T: Torque control mode, P/S: Position/speed control switching mode, S/T: Speed/torque control switching mode, T/P: Torque/position control switching mode
*3 Output devices are not assigned by default. Assign the output devices with [Pr. PD47] as necessary. This pin can be used only on the MR-J5-_A_-RJ_.
*4 This is available as an input device of a sink interface. If using it, assign the input device with [Pr. PD43] to [Pr. PD46] as necessary. In addition, supply + of 24 V DC to the CN3-12 pin.
*5 This is available as an input device of a source interface. If using it, assign the input device with [Pr. PD43] to [Pr. PD46] as necessary.
*6 This pin is available on servo amplifiers with firmware version B6 or later.

3.5 Signal (device) explanation

For the I/O interfaces (symbols in the column "I/O signal interface type" in the table), refer to the following.

☞ Page 133 Detailed explanation of interfaces

The pin numbers in the connector pin No. column are default numbers.

○and △ in the table show the following.

○: Devices that can be used in factory settings

△: Devices which become available by servo parameter settings

📖MR-J5-G/MR-J5W-G User's Manual (Parameters)

📖MR-J5-B/MR-J5W-B User's Manual (Parameters)

📖MR-J5-A User's Manual (Parameters)

Input device

Input device pin [G]

The following shows input device pins and the servo parameters used for setting devices.

■MR-J5-_G_ (excluding MR-J5-_G_-RJ_ and MR-J5-_G_-HS_)

Connector pin No.	Servo parameter	Initially assigned device	TPR assignment	I/O signal interface type
CN3-1 *1	[Pr. PD39]	TPR2	Possible	DI-1
CN3-2	[Pr. PD03]	LSP	Impossible	
CN3-10 *1	[Pr. PD38]	TPR1	Possible	
CN3-12	[Pr. PD04]	LSN	Impossible	
CN3-19	[Pr. PD05]	DOG		
CN3-20	—	EM2		

*1 Available on servo amplifiers with firmware version C0 or later and manufactured in June 2021 or later.

■MR-J5-_G_-RJ_

Connector pin No.	Servo parameter	Initially assigned device	TPR assignment	I/O signal interface type
CN3-1	[Pr. PD39]	TPR2	Possible	DI-1
CN3-2	[Pr. PD03]	LSP	Impossible	
CN3-10	[Pr. PD38]	TPR1	Possible	
CN3-12	[Pr. PD04]	LSN	Impossible	
CN3-19	[Pr. PD05]	DOG	Possible	
CN3-20	—	EM2	Impossible	

■MR-J5-_G_-HS_

Connector pin No.	Servo parameter	Initially assigned device	TPR assignment	I/O signal interface type
CN3-3B	—	EM2	Impossible	DI-1
CN3-4A	[Pr. PD38]	TPR1	Possible	
CN3-4B	[Pr. PD39]	TPR2	Possible	
CN3-5A	[Pr. PD03]	LSP	Impossible	
CN3-5B	[Pr. PD04]	LSN	Impossible	
CN3-6B	[Pr. PD05]	DOG	Possible	

■MR-J5W2-_G_

Connector pin No.	Servo parameter	Initially assigned device	TPR assignment	I/O signal interface type
CN3-7	[Pr. PD03] (A-axis)	LSP-A	Impossible	DI-1
CN3-8	[Pr. PD04] (A-axis)	LSN-A		
CN3-9	[Pr. PD05] (A-axis)	DOG-A	Possible	
CN3-10	—	EM2	Impossible	
CN3-15	[Pr. PD51] (common to all axes)	—	Possible	
CN3-20	[Pr. PD03] (B-axis)	LSP-B	Impossible	
CN3-21	[Pr. PD04] (B-axis)	LSN-B		
CN3-22	[Pr. PD05] (B-axis)	DOG-B	Possible	

■MR-J5W3-_G_

Connector pin No.	Servo parameter	Initially assigned device	TPR assignment	I/O signal interface type
CN3-1	[Pr. PD03] (C-axis)	LSP-C	Impossible	DI-1
CN3-2	[Pr. PD04] (C-axis)	LSN-C		
CN3-7	[Pr. PD03] (A-axis)	LSP-A		
CN3-8	[Pr. PD04] (A-axis)	LSN-A		
CN3-9	[Pr. PD05] (A-axis)	DOG-A	Possible	
CN3-10	—	EM2	Impossible	
CN3-15	[Pr. PD05] (C-axis)	DOG-C	Possible	
CN3-20	[Pr. PD03] (B-axis)	LSP-B	Impossible	
CN3-21	[Pr. PD04] (B-axis)	LSN-B		
CN3-22	[Pr. PD05] (B-axis)	DOG-B	Possible	

Input device pin [B]

The following shows input device pins and the servo parameters used for setting devices.

■MR-J5-_B_

Connector pin No.	Servo parameter	Initially assigned device	I/O signal interface type
CN3-2	—	DI1 *1	DI-1
CN3-12	—	DI2 *1	
CN3-19	—	DI3 *1	
CN3-20	—	EM2	

*1 Devices can be assigned to this pin with the controller setting. For the setting method, refer to each controller manual.

■MR-J5W2-_B_

Connector pin No.	Servo parameter	Initially assigned device	I/O signal interface type
CN3-7	—	DI1-A *1	DI-1
CN3-8	—	DI2-A *1	
CN3-9	—	DI3-A *1	
CN3-10	—	EM2 *1	
CN3-20	—	DI1-B *1	
CN3-21	—	DI2-B *1	
CN3-22	—	DI3-B *1	

*1 Devices can be assigned to this pin with the controller setting. For the setting method, refer to each controller manual.

■MR-J5W3-_B_

Connector pin No.	Servo parameter	Initially assigned device	I/O signal interface type
CN3-1	—	DI1-C *1	DI-1
CN3-2	—	DI2-C *1	
CN3-7	—	DI1-A *1	
CN3-8	—	DI2-A *1	
CN3-9	—	DI3-A *1	
CN3-10	—	EM2 *1	
CN3-15	—	DI3-C *1	
CN3-20	—	DI1-B *1	
CN3-21	—	DI2-B *1	
CN3-22	—	DI3-B *1	

*1 Devices can be assigned to this pin with the controller setting. For the setting method, refer to each controller manual.

Input device pin [A]

For input device pins and servo parameters for setting devices, refer to the following.

☞ Page 95 Connectors and pin assignments [A]

Input devices

Point

Refer to the following for details on the devices used in functional safety.

☞ Page 466 Connectors and pin assignments

When using the MR-J5-_G_-HS_, refer to the following for details on the devices used in functional safety.

☞ Page 478 Connectors and pin assignments

○and △ in the table show the following.

○: Devices that can be used in factory settings

△: Devices which become available by servo parameter settings

Device name	Symbol	Model					I/O signal interface type	Detailed explanation
		[G]	[B]	[A] *2				
				P	S	T		
Forced stop 2	EM2	○	○	○	○	○	DI-1	☞ Page 102 EM2 (Forced stop 2)
Forced stop 1	EM1	△	△	△	△	△	DI-1	☞ Page 103 EM1 (Forced stop 1)
Forward rotation stroke end	LSP	○	—	○	○	○	DI-1	☞ Page 103 LSP (Forward rotation stroke end)/LSN (Reverse rotation stroke end)
Reverse rotation stroke end	LSN	○	—	○	○	○	DI-1	
—	DI1	—	○	—	—	—	DI-1	Devices can be assigned to this pin with the controller setting. For the setting method, refer to each controller manual.
—	DI2	—	○	—	—	—	DI-1	
—	DI3	—	○	—	—	—	DI-1	
Proportional control	PC	△	—	○	△	—	DI-1	☞ Page 103 PC (Proportional control)
Gain switching	CDP	△	—	△	△	△	DI-1	☞ Page 103 CDP (Gain switching)
Gain switching 2	CDP2	△	—	△	△	△	DI-1	☞ Page 103 CDP2 (Gain switching 2)
Fully closed loop selection	CLD	△	—	△	—	—	DI-1	☞ Page 103 CLD (fully closed loop selection)
Proximity dog	DOG	○	—	—	—	—	DI-1	☞ Page 104 DOG (Proximity dog)
Touch probe 1	TPR1	*1	—	—	—	—	DI-1	☞ Page 104 TPR1 (Touch probe 1)/TPR2 (Touch probe 2)/TPR3 (Touch probe 3)
Touch probe 2	TPR2	*1	—	—	—	—	DI-1	
Touch probe 3	TPR3	*1	—	—	—	—	DI-1	
Servo-on	SON	—	—	○	○	○	DI-1	☞ Page 105 SON (Servo-on)
Reset	RES	—	—	△	△	△	DI-1	☞ Page 105 RES (Reset)
External torque limit selection	TL	—	—	○	△	—	DI-1	☞ Page 105 TL (External torque limit selection)
Internal torque limit selection	TL1	—	—	△	△	—	DI-1	☞ Page 105 TL1 (Internal torque limit selection)
Forward rotation start	ST1	—	—	—	○	—	DI-1	☞ Page 105 ST1 (Forward rotation start)/ST2 (Reverse rotation start)
Reverse rotation start	ST2	—	—	—	○	—	DI-1	
Forward rotation selection	RS1	—	—	—	—	○	DI-1	☞ Page 105 RS1 (Forward rotation selection)/RS2 (Reverse rotation selection)
Reverse rotation selection	RS2	—	—	—	—	○	DI-1	
Speed selection 1	SP1	—	—	—	○	○	DI-1	☞ Page 106 SP1 (Speed selection 1)/SP2 (Speed selection 2)/SP3 (Speed selection 3)
Speed selection 2	SP2	—	—	—	○	○	DI-1	
Speed selection 3	SP3	—	—	—	△	△	DI-1	
Clear	CR	—	—	○	—	—	DI-1	☞ Page 106 CR (Clear)
Electronic gear selection 1	CM1	—	—	△	—	—	DI-1	☞ Page 106 CM1 (Electronic gear selection 1)/CM2 (Electronic gear selection 2)
Electronic gear selection 2	CM2	—	—	△	—	—	DI-1	
Control switching	LOP	—	—	△	△	△	DI-1	☞ Page 107 LOP (Control switching)
Second acceleration/deceleration selection	STAB2	—	—	—	△	△	DI-1	☞ Page 107 STAB2 (Second acceleration/deceleration selection)

Device name	Symbol	Model					I/O signal interface type	Detailed explanation
		[G]	[B]	[A] *2				
				P	S	T		
ABS transfer mode	ABSM	—	—	△	—	—	DI-1	☞ Page 107 ABSM (ABS transfer mode)
ABS request	ABSR	—	—	△	—	—	DI-1	☞ Page 107 ABSR (ABS request)
Command input permission signal	PEN	—	—	△	—	—	DI-1	☞ Page 107 PEN (Command input permission signal)
Motor-side/load-side deviation counter clear	MECR	—	—	△	—	—	DI-1	☞ Page 107 MECR (Motor-side/load-side deviation counter clear)

*1 The device is available depending on the servo amplifier. Refer to each section indicated in the detailed explanation column.
*2 P: Position control mode, S: Speed control mode, T: Torque control mode

Input device explanation

Point

Refer to the following for details on the devices used in functional safety.
☞ Page 466 Connectors and pin assignments
When using the MR-J5-_G_-HS_, refer to the following for details on the devices used in functional safety.
☞ Page 478 Connectors and pin assignments

■EM2 (Forced stop 2)

When EM2 is turned off (open between commons), the servo motor decelerates to a stop with commands.
The forced stop will be deactivated if EM2 is turned on (short between commons) while in the forced stop state.
EM2 and EM1 are mutually exclusive. In the torque mode, EM2 functions the same as EM1.
For details, refer to "Forced stop deceleration function" in the following manual.
📖MR-J5 User's Manual (Function)

Setting value		EM2/EM1	Deceleration method	
[Pr. PA04.3]	[Pr. PA04.2] *1		EM2 or EM1 is off	Alarm occurrence
0	0	EM1	MBR (Electromagnetic brake interlock) turns off without the forced stop deceleration.	MBR (Electromagnetic brake interlock) turns off without the forced stop deceleration.
2	0	EM2	MBR (Electromagnetic brake interlock) turns off after the forced stop deceleration.	MBR (Electromagnetic brake interlock) turns off after the forced stop deceleration.
0	1	Neither EM2 nor EM1 is used.	—	MBR (Electromagnetic brake interlock) turns off without the forced stop deceleration.
2	1	Neither EM2 nor EM1 is used.	—	MBR (Electromagnetic brake interlock) turns off after the forced stop deceleration.

*1 For the MR-J5-_A_ servo amplifier, the setting value of this servo parameter is fixed to "0". To disable forced stop, change the setting value of [Pr. PD01.3].

■EM1 (Forced stop 1)

When EM1 is turned off (open between commons), the base circuit shuts off, and the dynamic brake operates to decelerate the servo motor to a stop.

The forced stop will be deactivated if EM1 is turned on (short between commons) while in the forced stop state.

■LSP (Forward rotation stroke end)/LSN (Reverse rotation stroke end)

To operate a servo motor, turn on LSP/LSN. Turn LSP/LSN off to bring the servo motor to a stop and switch it to the servo-lock state.

For information about areas such as the supported control modes, automatic on, and restrictions, refer to "Stroke limit function" in the following user's manual.

📖MR-J5 User's Manual (Function)

Input device		Operation	
LSP	LSN	CCW direction (positive direction)	CW direction (negative direction)
1 (on)	1 (on)	○	○
0 (off)	1 (on)	—	○
1 (on)	0 (off)	○	—
0 (off)	0 (off)	—	—

■PC (Proportional control)

Turn PC on to switch the speed amplifier from the proportional integral type to the proportional type.

If a servo motor is rotated even for a pulse due to any external factor while it is at a stop, it generates torque to compensate for a position mismatch. If locking the servo motor shaft mechanically after positioning completes, turn on PC (Proportional control) upon completion of positioning to suppress the unnecessary torque generated for compensation of a position mismatch.

If locking the shaft for a long period of time, set the torque value to be the rated torque or less.

Do not use PC in the torque mode. If PC is used in the torque mode, the servo motor may operate at a speed exceeding the speed limit value.

■CDP (Gain switching)

Turn on CDP to use the values of [Pr. PB29] to [Pr. PB36] and [Pr. PB56] to [Pr. PB60] as the load to motor inertia ratio and individual gain values.

When both CDP and CDP2 are on, the setting of CDP2 is prioritized.

For details, refer to "GAIN SWITCHING FUNCTION" in the following manual.

📖MR-J5 User's Manual (Adjustment)

■CDP2 (Gain switching 2)

Turn on CDP2 to use the values of [Pr. PB67] to [Pr. PB70] as the load to motor inertia ratio and individual gain values.

When both CDP and CDP2 are on, the setting of CDP2 is prioritized.

For details, refer to "GAIN SWITCHING FUNCTION" in the following manual.

📖MR-J5 User's Manual (Adjustment)

■CLD (fully closed loop selection)

This device can be used when the semi closed/fully closed loop control switching is enabled by [Pr. PE01].

The semi closed loop control is selected when CLD is turned off, and fully closed loop control is selected when CLD is turned on. The input device is available on servo amplifiers with firmware version A5 or later.

☞ Page 586 USING A FULLY CLOSED LOOP SYSTEM

Input device explanation [G]

■DOG (Proximity dog)

Turning off DOG will detect a proximity dog. The polarity for the proximity dog can be changed with [Pr. PT29.0].

[Pr. PT29.0]	Polarity for proximity dog detection
0	Dog detection with off
1	Dog detection with on

■TPR1 (Touch probe 1)/TPR2 (Touch probe 2)/TPR3 (Touch probe 3)

Refer to the following table for servo amplifiers on which TPR1 to TPR3 are available.

○and △ in the table show the following.

○: Devices that can be used in factory settings

△: Devices which become available by servo parameter settings

Servo amplifier	TPR1	TPR2	TPR3
MR-J5-_G *1	○	○	△
MR-J5-_G_-RJ_ *2	○	○	△
MR-J5-_G_-HS_	○	○	△
MR-J5W2-_G_ *2	△	△	△
MR-J5W3-_G_ *2	△	△	△

*1 Available on servo amplifiers with firmware version C0 or later and manufactured in June 2021 or later.

*2 Available on servo amplifiers with firmware version A5 or later.

These devices enable the touch probe function, which latches the current position with sensor input or by other means.

Turning on this device latches the current position.

For details, refer to "Touch probe" in the following manual.

MR-J5 User's Manual (Function)

Input device explanation [A]

■SON (Servo-on)

If SON is turned on, the base circuit will be powered on and the servo amplifier will become in the operation-ready state (servo-on state).

Once SON is turned off, the base circuit is shut off and the servo motor shaft coasts.

To change SON to "Automatic on" (always on) in the servo amplifier, set [Pr. PD01.0] to "4".

■RES (Reset)

Turn on RES for 50 ms or more to reset the alarm.

Some alarms cannot be deactivated by RES. For these alarms, refer to "Handling methods for alarms/warnings" in the following manual.

📖MR-J5 User's Manual (Troubleshooting)

Turning RES on in an alarm-free state shuts off the base circuit. If [Pr. PD30.1] is set to "1", the base circuit will not shut off. This device is not designed to make a stop. Do not turn it on during operation.

■TL (External torque limit selection)

When TL is off, [Pr. PA11] and [Pr. PA12] are enabled. When TL is on, TLA (Analog torque limit) is enabled.

For details, refer to "Torque limit" in the following manual.

📖MR-J5 User's Manual (Function)

■TL1 (Internal torque limit selection)

When TL1 is on, [Pr. PC35] is enabled. When TL1 is off, the TL condition is enabled.

For details, refer to "Torque limit" in the following manual.

📖MR-J5 User's Manual (Function)

■ST1 (Forward rotation start)/ST2 (Reverse rotation start)

This is used to start the servo motor. The following shows the rotation directions.

Input device		Servo motor starting direction
ST2	ST1	
0 (off)	0 (off)	Stop (servo-lock)
0 (off)	1 (on)	CCW
1 (on)	0 (off)	CW
1 (on)	1 (on)	Stop (servo-lock)

If both ST1 and ST2 are switched on or off during operation, the servo motor will be decelerated to a stop according to the setting value of [Pr. PC02] and will be locked.

If [Pr. PC23.0] is set to "1", the servo motor will not be locked after deceleration to a stop.

For details, refer to "Speed control mode (S)" in the following manual.

📖MR-J5 User's Manual (Function)

■RS1 (Forward rotation selection)/RS2 (Reverse rotation selection)

Select a servo motor torque generation direction. The following shows the torque generation directions.

Input device		Torque generation direction
RS2	RS1	
0 (off)	0 (off)	Torque is not generated.
0 (off)	1 (on)	Forward rotation in power running mode/reverse rotation in regenerative mode
1 (on)	0 (off)	Reverse rotation in power running mode/forward rotation in regenerative mode
1 (on)	1 (on)	Torque is not generated.

For details, refer to "Torque control mode (T)" in the following manual.

📖MR-J5 User's Manual (Function)

■SP1 (Speed selection 1)/SP2 (Speed selection 2)/SP3 (Speed selection 3)

• For speed control mode

Select the command speed for operation. The selection contents are as follows.

Input device			Speed command
SP3	SP2	SP1	
0 (off)	0 (off)	0 (off)	VC (Analog speed command)
0 (off)	0 (off)	1 (on)	[Pr. PC05]
0 (off)	1 (on)	0 (off)	[Pr. PC06]
0 (off)	1 (on)	1 (on)	[Pr. PC07]
1 (on)	0 (off)	0 (off)	[Pr. PC08]
1 (on)	0 (off)	1 (on)	[Pr. PC09]
1 (on)	1 (on)	0 (off)	[Pr. PC10]
1 (on)	1 (on)	1 (on)	[Pr. PC11]

For details, refer to "Speed control mode (S)" in the following manual.

MR-J5 User's Manual (Function)

• For torque control mode

Select the speed limit for operation. The selection contents are as follows.

Input device			Speed limit
SP3	SP2	SP1	
0 (off)	0 (off)	0 (off)	VLA (Analog speed limit)
0 (off)	0 (off)	1 (on)	[Pr. PC05]
0 (off)	1 (on)	0 (off)	[Pr. PC06]
0 (off)	1 (on)	1 (on)	[Pr. PC07]
1 (on)	0 (off)	0 (off)	[Pr. PC08]
1 (on)	0 (off)	1 (on)	[Pr. PC09]
1 (on)	1 (on)	0 (off)	[Pr. PC10]
1 (on)	1 (on)	1 (on)	[Pr. PC11]

For details, refer to "Torque control mode (T)" in the following manual.

MR-J5 User's Manual (Function)

■CR (Clear)

Turning on CR clears the droop pulses in the position control counter at the rising edge. The ON width of CR should be 10 ms or longer. If [Pr. PD32.0] is set to "1 ", the droop pulses will be always cleared while the CR is on. Moreover, the delay time set in [Pr. PB03] will also be cleared.

■CM1 (Electronic gear selection 1)/CM2 (Electronic gear selection 2)

The combination of CM1 and CM2 enables to select four different electronic gear numerators set in the parameters. CM1 and CM2 cannot be used in the absolute position detection system.

Input device		Electronic gear numerator
CM2	CM1	
0 (off)	0 (off)	[Pr. PA06]
0 (off)	1 (on)	[Pr. PC32]
1 (on)	0 (off)	[Pr. PC33]
1 (on)	1 (on)	[Pr. PC34]

For details, refer to "Electronic gear function" in the following manual.

MR-J5 User's Manual (Function)

■LOP (Control switching)

• Position/speed control switching mode

This is used to select the position control mode or the speed control mode in the position/speed control switching mode.

LOP	Control mode
0 (off)	Position control mode
1 (on)	Speed control mode

• Speed/torque control switching mode

This is used to select the speed control mode or the torque control mode in the speed/torque control switching mode.

LOP	Control mode
0 (off)	Speed control mode
1 (on)	Torque control mode

• Torque/position control switching mode

This is used to select the position control mode or the speed control mode in the torque/position control switching mode.

LOP	Control mode
0 (off)	Torque control mode
1 (on)	Position control mode

For details, refer to "Control switching" in the following manual.

📖MR-J5 User's Manual (Function)

■STAB2 (Second acceleration/deceleration selection)

This is used to select the acceleration/deceleration time constants while the servo motor rotates in the speed control mode or torque control mode. The S-pattern acceleration/deceleration time constants are always uniform.

STAB2	Acceleration/deceleration time constant
0 (off)	[Pr. PC01]/[Pr. PC02]
1 (on)	[Pr. PC30]/[Pr. PC31]

For details, refer to "Acceleration/deceleration function" in the following manual.

📖MR-J5 User's Manual (Function)

■ABSM (ABS transfer mode)

This is an ABS transfer mode request device. If [Pr. PA03.0] is set to "1" and an absolute position detection system by DIO is selected, ABSM will be assigned to the CN3-17 pin.

☞ Page 412 ABSOLUTE POSITION DETECTION SYSTEM

■ABSR (ABS request)

This is an ABS request device. If [Pr. PA03.0] is set to "1" and the absolute position detection system by DIO is selected, ABSR will be assigned to the CN3-18 pin.

☞ Page 412 ABSOLUTE POSITION DETECTION SYSTEM

■PEN (Command input permission signal)

If PEN is selected as an input device, command pulse trains are accepted while PEN is on. The input device is available on servo amplifiers with firmware version A5 or later.

For details, refer to "Command pulse train monitoring function" in the following manual.

📖MR-J5 User's Manual (Function)

■MECR (Motor-side/load-side deviation counter clear)

Turning on MECR clears the values of the motor-side/load-side position deviation counter at the signal rising edge.

- This device can be used in the fully closed loop control mode.
- The droop pulses in the position control will not be affected.
- The operation will not be affected even if this device is turned on while the semi closed loop control is in progress.
- The operation will not be affected even if this device is turned on while the fully closed loop control error detection function is disabled in [Pr. PE03]. The input device is available on servo amplifiers with firmware version A5 or later.

Output device

Output device pins

The following shows the output device pins and the servo parameters used for assigning devices.

■MR-J5-_G_ (-RJ_)

Connector pin No.	Servo parameter	Initially assigned device	I/O signal interface type
CN3-13	[Pr. PD07]	MBR	DO-1
CN3-9	[Pr. PD08]	INP	
CN3-15	[Pr. PD09]	ALM	

■MR-J5-_G_-HS_

Connector pin No.	Servo parameter	Initially assigned device	I/O signal interface type
CN3-1B	[Pr. PD07]	MBR	DO-1
CN3-2A	[Pr. PD08]	INP	
CN3-2B	[Pr. PD09]	ALM	

■MR-J5W2-_G_

Connector pin No.	Servo parameter	Initially assigned device	I/O signal interface type
CN3-12	[Pr. PD07] (A-axis)	MBR-A	DO-1
CN3-25	[Pr. PD07] (B-axis)	MBR-B	
CN3-24	[Pr. PD08] (common)	CINP	
CN3-11	[Pr. PD09] (common)	CALM	

■MR-J5W3-_G_

Connector pin No.	Servo parameter	Initially assigned device	I/O signal interface type
CN3-12	[Pr. PD07] (A-axis)	MBR-A	DO-1
CN3-25	[Pr. PD07] (B-axis)	MBR-B	
CN3-13	[Pr. PD07] (C-axis)	MBR-C	
CN3-24	[Pr. PD08] (common)	CINP	
CN3-11	[Pr. PD09] (common)	CALM	

■MR-J5-_B_

Connector pin No.	Servo parameter	Initially assigned device	I/O signal interface type
CN3-13	[Pr. PD07]	MBR	DO-1
CN3-9	[Pr. PD08]	INP	
CN3-15	[Pr. PD09]	ALM	

■MR-J5W2-_B_

Connector pin No.	Servo parameter	Initially assigned device	I/O signal interface type
CN3-12	[Pr. PD07] (A-axis)	MBR-A	DO-1
CN3-25	[Pr. PD07] (B-axis)	MBR-B	
CN3-24	[Pr. PD08] (common)	CINP	
CN3-11	[Pr. PD09] (common)	CALM	

■MR-J5W3-_B_

Connector pin No.	Servo parameter	Initially assigned device	I/O signal interface type
CN3-12	[Pr. PD07] (A-axis)	MBR-A	DO-1
CN3-25	[Pr. PD07] (B-axis)	MBR-B	
CN3-13	[Pr. PD07] (C-axis)	MBR-C	
CN3-24	[Pr. PD08] (common)	CINP	
CN3-11	[Pr. PD09] (common)	CALM	

■MR-J5-_A_

For the output device pins and the servo parameters for setting the devices, refer to the following.

☞ Page 95 Connectors and pin assignments [A]

Output devices

Point

Refer to the following for details on the devices used in functional safety.

☞ Page 466 Connectors and pin assignments

When using the MR-J5-_G_-HS_, refer to the following for details on the devices used in functional safety.

☞ Page 478 Connectors and pin assignments

○and △ in the table show the following.

○: Devices that can be used in factory settings

△: Devices which become available by servo parameter settings

Device name	Symbol	Model					I/O signal interface type	Detailed explanation
		[G]	[B]	[A] *1				
				P	S	T		
Malfunction	ALM	○	○	○	○	○	DO-1	☞ Page 110 ALM (Malfunction)
In-position	INP	○	○	○	—	—	DO-1	☞ Page 110 INP (In-position)
Ready	RD	○	○	○	○	○	DO-1	☞ Page 110 RD (Ready)
Speed reached	SA	△	△	—	○	—	DO-1	☞ Page 110 SA (Speed reached)
Warning	WNG	△	△	△	△	△	DO-1	☞ Page 110 WNG (Warning)
Battery warning	BWNG	△	△	△	△	△	DO-1	☞ Page 110 BWNG (Battery warning)
Motor stop warning	WNGSTOP	△	△	△	△	△	DO-1	☞ Page 110 WNGSTOP (Motor stop warning)
Variable gain enabled	CDPS	△	△	△	△	△	DO-1	☞ Page 111 CDPS (Variable gain enabled)
Variable gain enabled 2	CDPS2	△	△	△	△	△	DO-1	☞ Page 111 CDPS2 (Variable gain enabled 2)
Absolute position erased	ABSV	△	△	△	△	△	DO-1	☞ Page 111 ABSV (Absolute position erased)
Tough drive in progress	MTTR	△	△	△	△	△	DO-1	☞ Page 111 MTTR (Tough drive in progress)
Fully closed loop control in progress	CLDS	△	△	△	△	△	DO-1	☞ Page 111 CLDS (Fully closed loop control in progress)
Electromagnetic brake interlock	MBR	○	○	△	△	△	DO-1	[G]: ☞ Page 112 MBR (Electromagnetic brake interlock) [A]: ☞ Page 113 MBR (Electromagnetic brake interlock)
Limiting speed	VLC	△	△	—	—	○	DO-1	[G]: ☞ Page 112 VLC (Limiting speed) [A]: ☞ Page 113 VLC (Limiting speed)
Zero speed detection	ZSP	○	○	○	○	○	DO-1	[G]: ☞ Page 112 ZSP (Zero speed detection) [A]: ☞ Page 113 ZSP (Zero speed detection)
Limiting torque	TLC	△	△	○	○	—	DO-1	[G]: ☞ Page 112 TLC (Limiting torque) [A]: ☞ Page 113 TLC (Limiting torque)
ABS transmission data bit 0	ABSB0	—	—	△	—	—	DO-1	☞ Page 113 ABSB0 (ABS transmission data bit 0)
ABS transmission data bit 1	ABSB1	—	—	△	—	—	DO-1	☞ Page 114 ABSB1 (ABS transmission data bit 1)
ABS transmission data ready	ABST	—	—	△	—	—	DO-1	☞ Page 114 ABST (ABS transmission data ready)

Device name	Symbol	Model					I/O signal interface type	Detailed explanation
		[G]	[B]	[A] *1				
				P	S	T		
Malfunction/Warning	ALMWNG	—	—	△	△	△	DO-1	☞ Page 114 ALMWNG (Malfunction/ Warning)
AL9F warning	BW9F	—	—	△	△	△	DO-1	☞ Page 114 BW9F (AL9F warning)
Command pulse train input permitted	PENS	—	—	△	—	—	DO-1	☞ Page 114 PENS (Command pulse train input permitted)
General-purpose output A	DOA	△	—	—	—	—	DO-1	☞ Page 112 DOA (General-purpose output A)/DOB (General-purpose output B)/ DOC (General-purpose output C)
General-purpose output B	DOB	△	—	—	—	—		
General-purpose output C	DOC	△	—	—	—	—		

*1 P: Position control mode, S: Speed control mode, T: Torque control mode

Output device explanation

Point

Refer to the following for details on the devices used in functional safety.
☞ Page 466 Connectors and pin assignments
When using the MR-J5-_G_-HS_, refer to the following for details on the devices used in functional safety.
☞ Page 478 Connectors and pin assignments

■ALM (Malfunction)

If the protective circuit operates and shuts off the base circuit, ALM will turn off.
If an alarm is not occurring, ALM will turn on in 2.5 s to 3.5 s after power-on (or in 3.5 s to 4.0 s for a multi-axis servo amplifier).
For details, refer to "Alarm function" in the following manual.
📖MR-J5 User's Manual (Function)

■INP (In-position)

If droop pulses are within the in-position range, INP will turn on. The in-position range can be changed with [Pr. PA10]. When the servo motor is operated at low speed by increasing the in-position range, INP may remain on.
The device cannot be used in the velocity mode or torque mode.
For details, refer to "In-position range setting" in the following manual.
📖MR-J5 User's Manual (Function)

■RD (Ready)

When the servo amplifier is switched to the servo-on state, RD switches on.

■SA (Speed reached)

At servo-off, SA is off. When the servo motor speed reaches the following range, SA turns on.
Set speed ± ((Set speed × 0.05) + 20) r/min (mm/s)
When the set speed is 20 r/min (mm/s) or less, SA is always on.
The device cannot be used in the position mode and torque mode.
For the MR-J5-_A_ servo amplifier, SA does not turn ON even when the servo motor speed reaches the set speed by external force when both ST1 (forward rotation start) and ST2 (reverse rotation start) are off.

■WNG (Warning)

WNG turns on when a warning occurs. If a warning is not occurring, WNG will turn off in 2.5 s to 3.5 s after power-on (or in 3.5 s to 4.0 s for a multi-axis servo amplifier).

■BWNG (Battery warning)

If [AL. 092 Battery cable disconnection warning] or [AL. 09F Battery warning] occurs, BWNG will turn on. If a battery warning is not occurring, BWNG will turn off in 2.5 s to 3.5 s after power-on (or in 3.5 s to 4.0 s for a multi-axis servo amplifier).
In an absolute position detection system with a battery-less ABS encoder, BWNG is always off.

■WNGSTOP (Motor stop warning)

WNGSTOP will turn on if a warning that the motor cannot be driven occurs. If a motor stop warning is not occurring, WNGSTOP will turn off in 2.5 s to 3.5 s after power-on (or in 3.5 s to 4.0 s for a multi-axis servo amplifier).

■CDPS (Variable gain enabled)

When the gain of "Gain switching" is enabled, CDPS is on.

■CDPS2 (Variable gain enabled 2)

If the gain of "Gain switching 2" is enabled, CDPS2 will turn on.

■ABSV (Absolute position erased)

ABSV turns on when the absolute position is undetermined.

☞ Page 412 ABSOLUTE POSITION DETECTION SYSTEM

■MTTR (Tough drive in progress)

When a tough drive is set to "Enabled" in [Pr. PA20], activating the instantaneous power failure tough drive turns on MTTR. For details, refer to "Instantaneous power failure tough drive" in the following manual.

MR-J5 User's Manual (Function)

■CLDS (Fully closed loop control in progress)

When the fully closed loop control is in progress, the CLDS is on. The output device is available on servo amplifiers with firmware version A5 or later.

Output device explanation [G] [B]

■MBR (Electromagnetic brake interlock)

MBR is off in the servo-off state or at an alarm occurrence.

If using the device, set an operation delay time of the electromagnetic brake in [Pr. PC02].

For details. refer to "Electromagnetic brake interlock function" in the following manual.

📖MR-J5 User's Manual (Function)

■VLC (Limiting speed)

If the speed reaches the speed limit value in the torque mode, VLC will turn on. VLC will turn off in the servo-off state.

The device cannot be used in the position mode or the velocity mode.

For details, refer to "Speed limit" in the following manual.

📖MR-J5 User's Manual (Function)

■ZSP (Zero speed detection)

If the servo motor speed is the zero speed or less, ZSP will turn on. The zero speed can be changed with [Pr. PC07]. The following shows an example when the initial value (50) is set in [Pr. PC07].

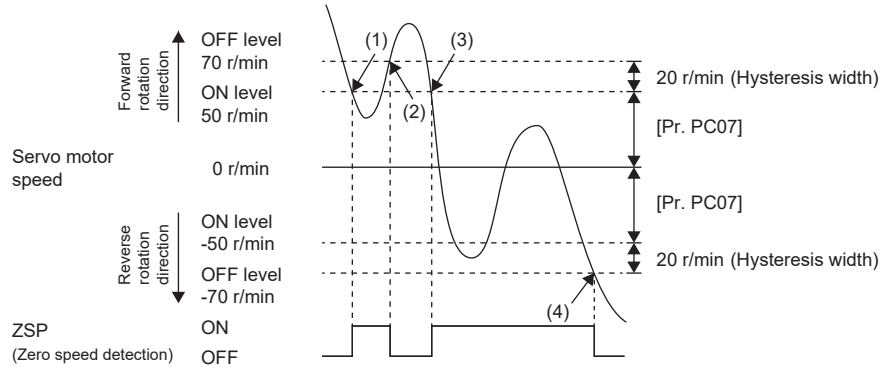

ZSP will turn on when the servo motor speed is reduced to 50 r/min (at (1)), and will turn off when the servo motor is increased to 70 r/min again (at (2)).

ZSP will turn on when the servo motor is decelerated again to 50 r/min (at (3)), and will turn off when the servo motor speed reaches -70 r/min (at (4)).

The range from the point when the servo motor speed has reached the on-level and ZSP turns on, to the point when the speed has increased again and reached the off-level is called a hysteresis width.

The hysteresis width is 20 r/min for this servo amplifier.

If using a linear servo motor, replace [r/min] with [mm/s].

■TLC (Limiting torque)

If the torque reaches the torque limit value when torque is generated, TLC will turn on. TLC will turn off in the servo-off state.

In the torque mode, TLC is off.

For details, refer to "Torque limit" in the following manual.

📖MR-J5 User's Manual (Function)

■DOA (General-purpose output A)/DOB (General-purpose output B)/DOC (General-purpose output C)

For the MR-J5_-_B_, this device cannot be used.

The pins to which the device is assigned can be switched on/off with the object "Digital outputs". For details, refer to "[Digital outputs (Obj. 60FEh)]" in the User's Manual (Object Dictionary). The output device is available on servo amplifiers with firmware version B6 or later.

Output device explanation [A]

■MBR (Electromagnetic brake interlock)

MBR is off in the servo-off state or at an alarm occurrence.

If using the device, set an operation delay time of the electromagnetic brake in [Pr. PC16].

For details. refer to "Electromagnetic brake interlock function" in the following manual.

📖MR-J5 User's Manual (Function)

■VLC (Limiting speed)

In the torque mode, VLC will turn on if the speed reaches the value limited with any of [Pr. PC05] to [Pr. PC11] or VLA (Analog speed limit). VLC will turn off in the servo-off state.

For details, refer to "Speed limit" in the following manual.

📖MR-J5 User's Manual (Function)

■ZSP (Zero speed detection)

If the servo motor speed is the zero speed or less, ZSP will turn on. The zero speed can be changed with [Pr. PC17]. The following shows an example when the initial value (50) is set in [Pr. PC17].

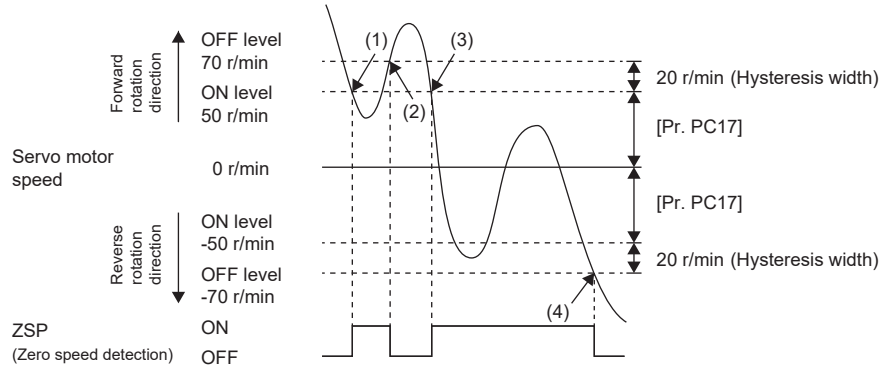

ZSP will turn on when the servo motor speed is reduced to 50 r/min (at (1)), and will turn off when the servo motor is increased to 70 r/min again (at (2)).

ZSP will turn on when the servo motor is decelerated again to 50 r/min (at (3)), and will turn off when the servo motor speed reaches -70 r/min (at (4)).

The range from the point when the servo motor speed has reached the on-level and ZSP turns on, to the point when the speed has increased again and reached the off-level is called a hysteresis width.

The hysteresis width is 20 r/min for this servo amplifier.

If using a linear servo motor, replace [r/min] with [mm/s].

■TLC (Limiting torque)

When torque is generated, TLC will turn on if the torque reaches the torque limit value set with any of [Pr. PA11], [Pr. PA12], or TLA (Analog torque limit).

For details, refer to "Torque limit" in the following manual.

📖MR-J5 User's Manual (Function)

■ABSB0 (ABS transmission data bit 0)

This is used to output ABS transmission data bit 0. If the absolute position detection system by DIO is selected while [Pr. PA03.0] is set to "1", ABSB0 will be assigned to the CN3-22 pin only in the ABS transfer mode.

☞ Page 412 ABSOLUTE POSITION DETECTION SYSTEM

■ABSB1 (ABS transmission data bit 1)

This is used to output ABS transmission data bit 0. If the absolute position detection system by DIO is selected while [Pr. PA03.0] is set to "1", ABSB1 will be assigned to the CN3-23 pin only in the ABS transfer mode.

☞ Page 412 ABSOLUTE POSITION DETECTION SYSTEM

■ABST (ABS transmission data ready)

This is used to output ABS transmission data ready. If the absolute position detection system by DIO is selected while [Pr. PA03.0] is set to "1", ABST will be assigned to the CN3-25 pin only in the ABS transfer mode.

☞ Page 412 ABSOLUTE POSITION DETECTION SYSTEM

■ALMWNG (Malfunction/Warning)

When an alarm occurs, ALMWNG turns off.

When a warning occurs (except for [AL. 09F Battery warning]), ALMWNG turns on and off repeatedly approximately every 1 s.

When neither an alarm nor a warning is occurring, ALMWNG will turn on in 2.5 s to 3.5 s after power-on.

■BW9F (AL9F warning)

When [AL. 9F Battery warning] occurs, BW9F turns on.

In the absolute position detection system with a battery-less ABS encoder, BW9F is always off.

■PENS (Command pulse train input permitted)

While the command pulse train input can be received, PENS is on.

In addition, if PEN has not been assigned to the input device, PENS is on. The output device is available on servo amplifiers with firmware version A5 or later.

For details, refer to "Command pulse train monitoring function" in the following manual.

📖MR-J5 User's Manual (Function)

Input signal

List of supported input signals

Device name	Symbol	Model					I/O signal interface type	Detailed explanation
		[G]	[B]	[A]				
				P	S	T		
Analog torque limit	TLA	—	—	○	△	—	AI-1	☞ Page 115 TLA (Analog torque limit)
Analog torque command	TC	—	—	—	—	○	AI-1	☞ Page 115 TC (Analog torque command)
Analog speed command	VC	—	—	—	○	—	AI-1	☞ Page 115 VC (Analog speed command)
Analog speed limit	VLA	—	—	—	—	○	AI-1	☞ Page 116 VLA (Analog speed limit)
Forward/reverse rotation pulse train	PP/NP/PP2/ NP2/PG/NG	—	—	○	—	—	DI-2	☞ Page 116 PP/NP/PP2/NP2/PG/NG (Forward/reverse rotation pulse train)

Input signal explanation [A]

■TLA (Analog torque limit)

When TLA is enabled, all the torque generated by the servo motor is limited. Apply 0 V DC to +10 V DC between TLA and LG. Connect the positive terminal of the power supply to TLA. The maximum torque is generated at +10 V.

For details, refer to "Torque limit" in the following manual.

📖MR-J5 User's Manual (Function)

If a value equal to or larger than the maximum torque is input to TLA, the value is clamped at the maximum torque.

Resolution: 12 bits

■TC (Analog torque command)

This is used to control all the torque generated by the servo motor. Apply 0 V DC to ±8 V DC between TC and LG. The maximum torque is generated at ±8 V. The torque at ±8 V can be changed with [Pr. PC13].

For details, refer to "Torque control mode (T)" in the following manual.

📖MR-J5 User's Manual (Function)

If a value equal to or larger than the maximum torque is input to TC, the value is clamped at the maximum torque.

■VC (Analog speed command)

Apply 0 V DC to ±10 V DC between VC and LG. At ±10 V, the servo motor speed is the value set in [Pr. PC12].

For details, refer to "Speed control mode (S)" in the following manual.

📖MR-J5 User's Manual (Function)

If a value equal to or larger than the maximum speed is input to VC, the value is clamped at the maximum speed. When changing the speed to the permissible speed, change the setting value in [Pr. PA28.4].

Resolution: 14 bits or its equivalent (MR-J5-_A_-RJ_: 16 bits or its equivalent)

For the MR-J5-_A_-RJ_ servo amplifiers, setting [Pr. PC60.1] to "2" changes the analog input resolution to 14 bits.

■VLA (Analog speed limit)

Apply 0 V DC to ±10 V DC between VLA and LG. At ±10 V, the servo motor speed is the value set in [Pr. PC12].
For details, refer to "Speed limit" in the following manual.
MR-J5 User's Manual (Function)
If a value equal to or larger than the maximum speed is input to VLA, the value is clamped at the maximum speed. When changing the speed to the permissible speed, change the setting value in [Pr. PA28.4].
Resolution: 14 bits or its equivalent (MR-J5-_A_-RJ_: 16 bits or its equivalent)
For the MR-J5-_A_-RJ_ servo amplifiers, setting [Pr. PC60.1] to "2" changes the analog input resolution to 14 bits.

■PP/NP/PP2/NP2/PG/NG (Forward/reverse rotation pulse train)

This is used to enter a command pulse train.

- For open-collector type (sink input interface)

The maximum input frequency is 200 kpulses/s. For A-phase and B-phase pulse trains, 200 kpulses/s will be the frequency after multiplication by four.
Input the forward rotation pulse train between PP and DOCOM.
Input the reverse rotation pulse train between NP and DOCOM.

- For open-collector type (source input interface)

The maximum input frequency is 200 kpulses/s. For A-phase and B-phase pulse trains, 200 kpulses/s will be the frequency after multiplication by four.
Input the forward rotation pulse train between PP2 and PG.
Input the reverse rotation pulse train between NP2 and NG.

- For differential receiver type

The maximum input frequency is 4 Mpulses/s. For A-phase and B-phase pulse trains, 4 Mpulses/s will be the frequency after multiplication by four.
Input the forward rotation pulse train between PG and PP.
Input the reverse rotation pulse train between NG and NP.
The command input pulse train form, pulse train logic, and command input pulse train filter are changed in [Pr. PA13]. When the command pulse train exceeds 1 Mpulse/s and is 4 Mpulses/s or less, set [Pr. PA13.2] to "0".
For details, refer to "Position control mode (P)" in the following manual.
MR-J5 User's Manual (Function)

Output signal

Output signal explanation

■LA/LAR (Encoder A-phase pulse (differential line driver))/LB/LBR (Encoder B-phase pulse (differential line driver))

These devices output encoder output pulses set in [Pr. PA15] and [Pr. PA16] in the differential line driver type.
When the servo motor rotates in the CCW direction, the encoder B-phase pulse lags the encoder A-phase pulse by a phase of 90 degrees.
The relation between rotation direction and phase difference of the A-phase and B-phase pulses can be changed with the servo parameter "Encoder output pulse - Phase selection".
[G] [B]: [Pr. PC03.0]
[A]: [Pr. PC19.0]
Output pulse setting, dividing ratio setting, and electronic gear setting can be selected.
The maximum output frequency is 4.6 Mpulses/s.
For details, refer to "A/B/Z-phase pulse output function" in the following manual.
📖MR-J5 User's Manual (Function)

■LZ/LZR (Encoder Z-phase pulse (differential line driver))

The encoder zero-point signal is output in the differential line driver type. One pulse is output per servo motor revolution. LZ/LZR are on at the zero-point position.
The minimum pulse width is about 400 μs. For homing using this pulse, set the creep speed to 100 r/min or less.
Multi-axis servo amplifiers do not support this output signal.
For details, refer to "A/B/Z-phase pulse output function" in the following manual.
📖MR-J5 User's Manual (Function)

■MO1 (Analog monitor 1)

For the MR-J5W_-_B_, this pin cannot be used.
This signal outputs the data set in the servo parameter "Analog monitor 1 output selection" to between MO1 and LG in terms of voltage.
[G] [B]: [Pr. PC09.0-1]
[A]: [Pr. PC14.0-1]
Output voltage: ±10 V
Resolution: 10 bits or its equivalent
For details, refer to "Analog monitor" in the following manual.
📖MR-J5 User's Manual (Function)

■MO2 (Analog monitor 2)

For the MR-J5W_-_B_, this pin cannot be used.
This signal outputs the data set in the servo parameter "Analog monitor 2 output selection" to between MO2 and LG in terms of voltage.
[G] [B]: [Pr. PC10.0-1]
[A]: [Pr. PC15.0-1]
Output voltage: ±10 V
Resolution: 10 bits or its equivalent
For details, refer to "Analog monitor" in the following manual.
📖MR-J5 User's Manual (Function)

Output signal explanation [A]

■OP (Encoder Z-phase pulse (open collector))

The encoder zero-point signal is output in the open-collector type. One pulse is output per servo motor revolution. OP is on at the zero-point position.

For details, refer to "A/B/Z-phase pulse output function" in the following manual.

📖MR-J5 User's Manual (Function)

Power supply

Power supply explanations

■DICOM (Digital input I/F power supply)

Input 24 V DC (24 V DC ± 10 %) for I/O interface. The power supply capacity varies depending on the number of I/O interface points to be used. It is 300 mA for the MR-J5-_G_, and it is 500 mA for the MR-J5-_A_.
For sink interfaces, connect the positive terminal of the 24 V DC external power supply.
For source interfaces, connect the negative terminal of the 24 V DC external power supply.

■DOCOM (Digital output I/F power supply)

Input 24 V DC (24 V DC ± 10 %) for I/O interface. The power supply capacity varies depending on the number of I/O interface points to be used. It is 300 mA for the MR-J5-_G_, and it is 500 mA for the MR-J5-_A_.
For sink interfaces, connect the negative terminal of the 24 V DC external power supply.
For source interfaces, connect the positive terminal of the 24 V DC external power supply.

■LG (Monitor common)

LG is a common terminal of MO1 and MO2.

■SD (Shield)

Connect the external conductor of a shielded wire to SD.

Power supply explanation [A]

■OPC (Open-collector - Sink interface power supply input)

- Position control mode

When inputting a pulse train in the open-collector type with sink interface, supply the positive power of 24 V DC to this terminal.

- Speed control mode/torque control mode

Supply the positive (+) power of 24 V DC to this terminal if using the CN3-10 pin and CN3-35 pin for DI. The CN3-10 pin and CN3-35 pin can be used on the MR-J5-_A_-RJ_ servo amplifiers.

■P15R (15 V DC Power supply output)

This outputs 15 V DC to between P15R and LG. This is available as a power supply for TC/TLA/VC/VLA.
Permissible current: 30 mA

■LG (Control common)

This is a common terminal of TLA/TC/VC/VLA/OP/MO1/MO2/P15R. Each pin is connected internally.

3.6 Interface

Internal connection diagram [G]

1-axis servo amplifier

■MR-J5-_G_ (excluding MR-J5-_G_-HS_)

Point

Refer to the following for the CN8 connector.

☞ Page 447 USING STO FUNCTION

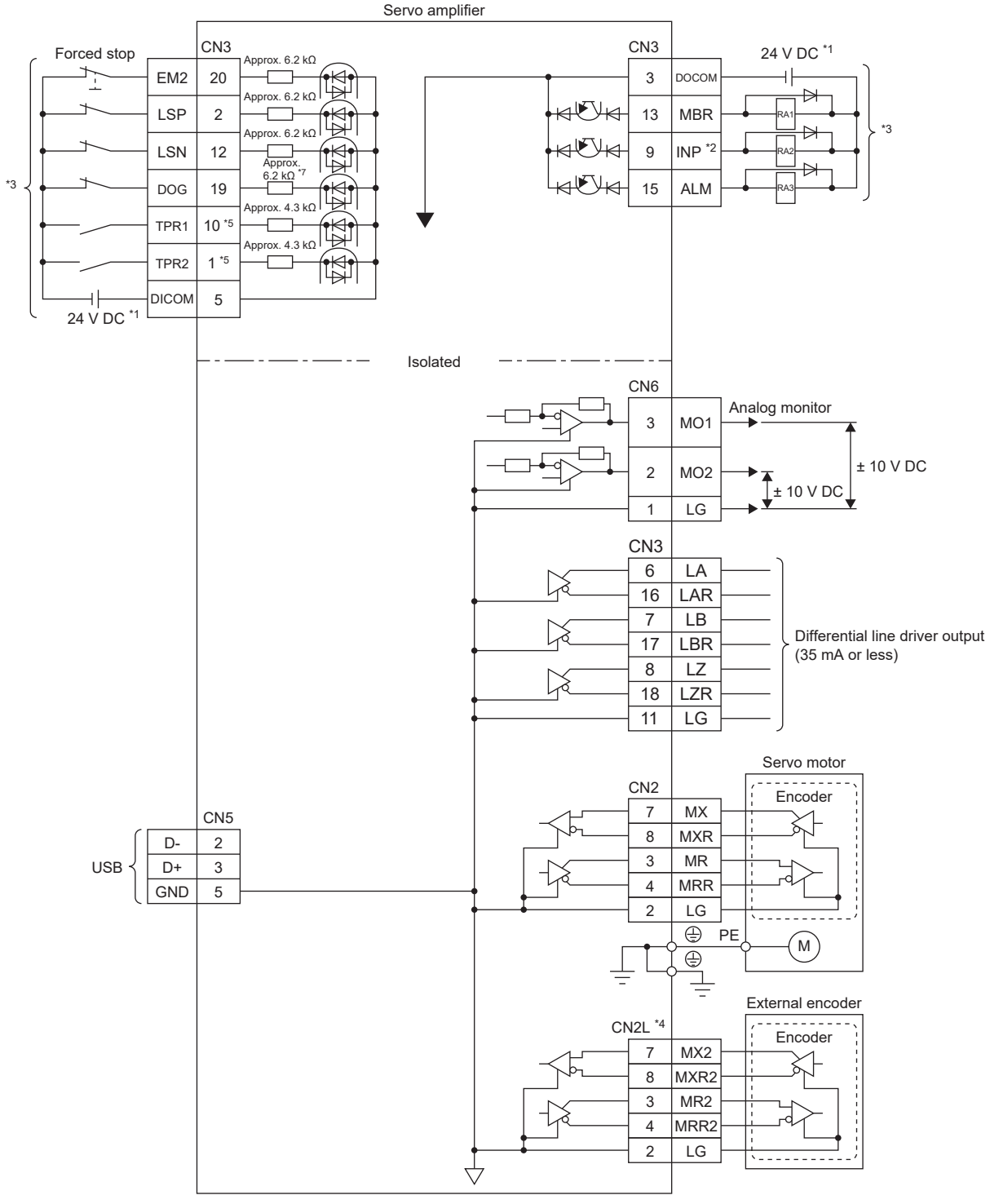

*1 Although the diagram shows the input signal and the output signal each using a separate 24 V DC power supply for illustrative purposes, the system can be configured to use a single 24 V DC power supply.
*2 The signal cannot be used in the velocity mode and torque mode.
*3 This diagram shows a sink I/O interface. For the source I/O interface, refer to the following.
☞ Page 137 Source I/O interface
*4 Refer to "Parts identification" in User's Manual (Introduction) for connecting an external encoder.
*5 Some pin functions are limited by the firmware version and the date of manufacture of the servo amplifier being used. For details, refer to "Model designation" in the User's Manual (Introduction).
*6 Approximately 4.3 kΩ for the MR-J5-_G_-RJ_.

■MR-J5-_G_-HS_

Point

Refer to the following for 8A to 16A and 8B to 16B of the CN3 connector.

☞ Page 474 USING FUNCTIONAL SAFETY [G] (MR-J5-_G_-HS_)

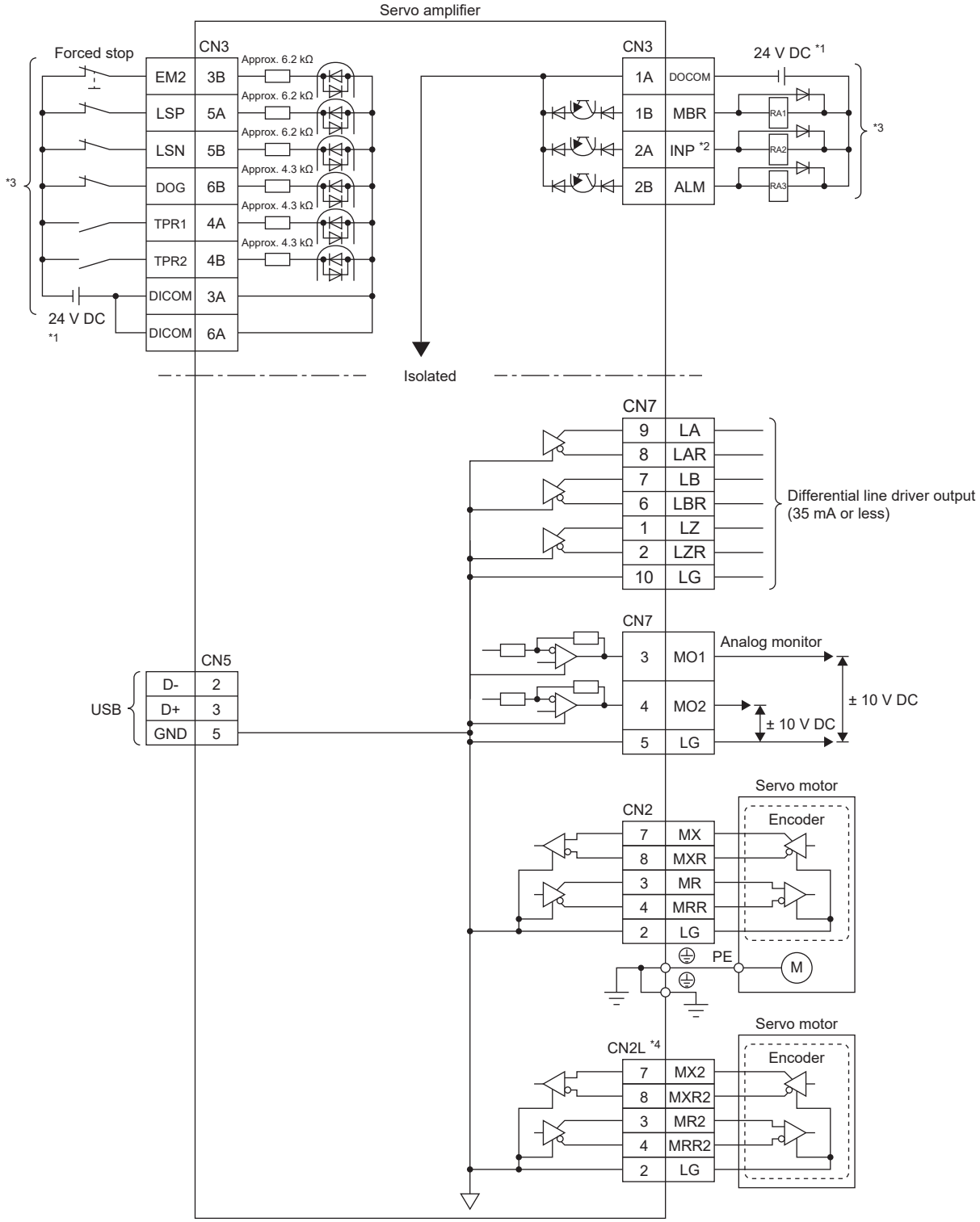

*1 Although the diagram shows the input signal and the output signal each using a separate 24 V DC power supply for illustrative purposes, the system can be configured to use a single 24 V DC power supply.

*2 The signal cannot be used in the velocity mode and torque mode.

*3 This diagram shows a sink I/O interface. For the source I/O interface, refer to the following.

☞ Page 137 Source I/O interface

*4 Refer to "Parts identification" in User's Manual (Introduction) for connecting an external encoder.

Multi-axis servo amplifier

Point

Refer to the following for the CN8 connector.

☞ Page 447 USING STO FUNCTION

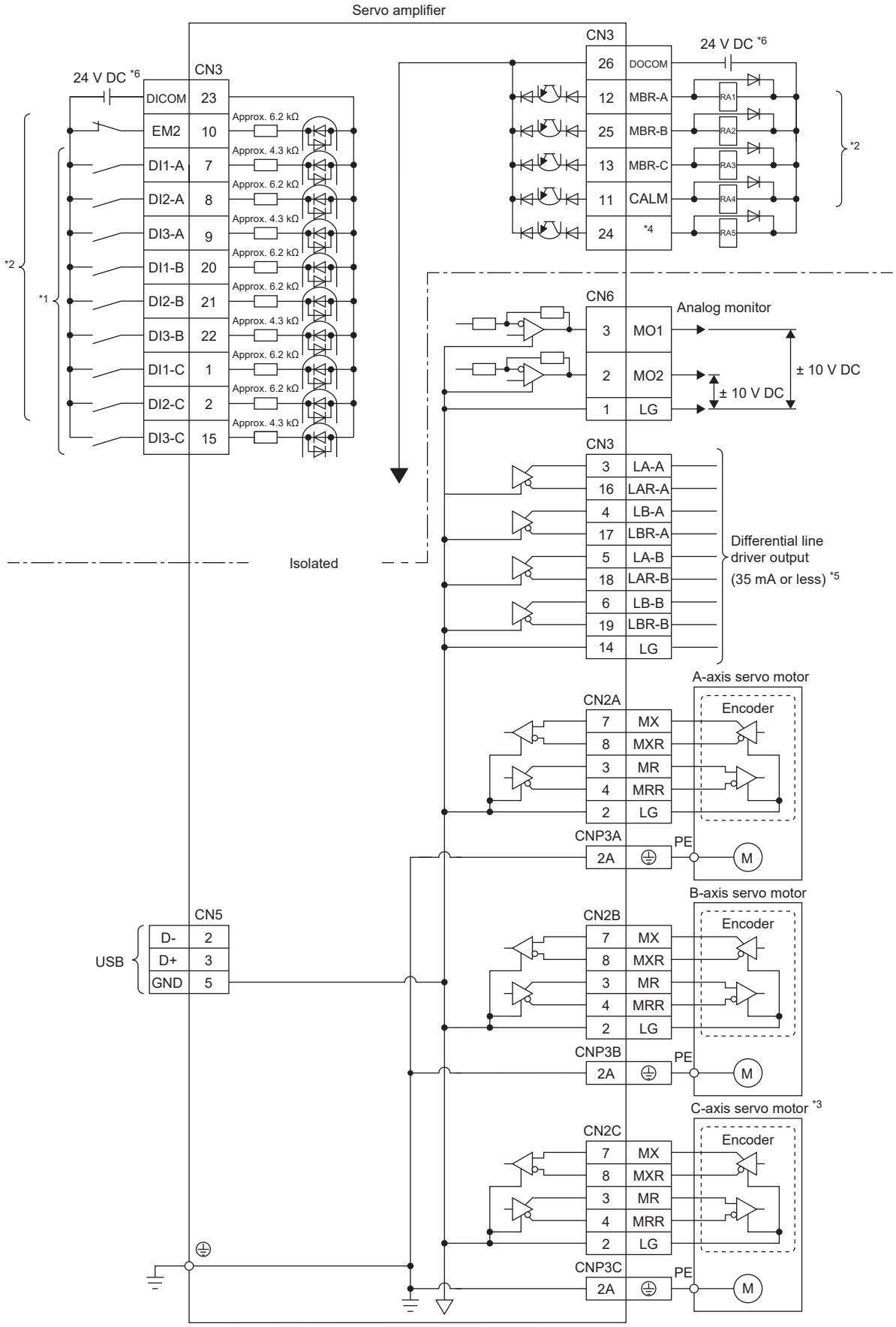
Servo amplifier
CN3
24 V DC *6
DICOM 23
EM2 10
DI1-A 7
DI2-A 8
DI3-A 9
DI1-B 20
DI2-B 21
DI3-B 22
DI1-C 1
DI2-C 2
DI3-C 15
Approx. 6.2 kΩ
Approx. 4.3 kΩ
*1
*2
26 DOCOM
12 MBR-A
25 MBR-B
13 MBR-C
11 CALM
24 *4
RA1
RA2
RA3
RA4
RA5
CN6
3 MO1
2 MO2
1 LG
Analog monitor
± 10 V DC
Isolated
3 LA-A
16 LAR-A
4 LB-A
17 LBR-A
5 LA-B
18 LAR-B
6 LB-B
19 LBR-B
14 LG
Differential line driver output (35 mA or less) *5
A-axis servo motor
CN2A
7 MX
8 MXR
3 MR
4 MRR
2 LG
Encoder
CNP3A
2A
PE
M
B-axis servo motor
CN2B
CNP3B
C-axis servo motor *3
CN2C
CNP3C
CN5
USB
D- 2
D+ 3
GND 5

*1 Signals can be assigned to these pins with servo parameters ([Pr. PD03] to [Pr. PD05]).
*2 This diagram shows a sink I/O interface. For the source I/O interface, refer to the following.
☞ Page 137 Source I/O interface
*3 The diagram is for 3-axis servo amplifiers.
*4 In the initial setting, CINP (AND in-position) is assigned to this pin. The device of the pin can be changed with [Pr. PD08.0].
*5 This signal cannot be used on 3-axis servo amplifiers.
*6 Although the diagram shows the input signal and the output signal each using a separate 24 V DC power supply for illustrative purposes, the system can be configured to use a single 24 V DC power supply.

Internal connection diagram [B]

Point

Refer to the following for the CN8 connector.

☞ Page 447 USING STO FUNCTION

1-axis servo amplifier

■MR-J5-_B_

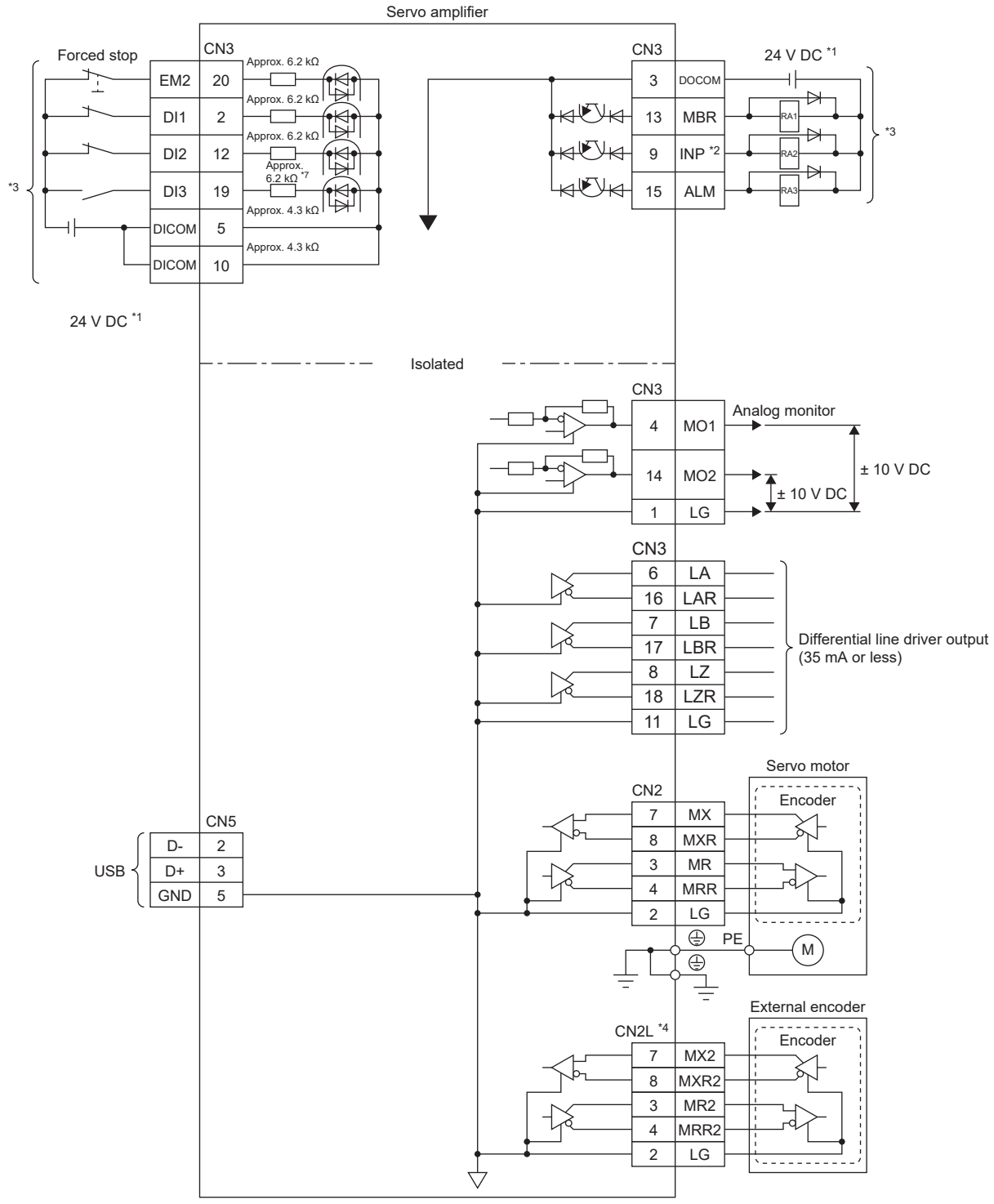

*1 Although the diagram shows the input signal and the output signal each using a separate 24 V DC power supply for illustrative purposes, the system can be configured to use a single 24 V DC power supply.
*2 The signal cannot be used in the velocity mode and torque mode.
*3 This diagram shows a sink I/O interface. For the source I/O interface, refer to the following.
☞ Page 137 Source I/O interface
*4 Refer to "Parts identification" in the User's Manual (Introduction) for connecting an external encoder.

Multi-axis servo amplifier

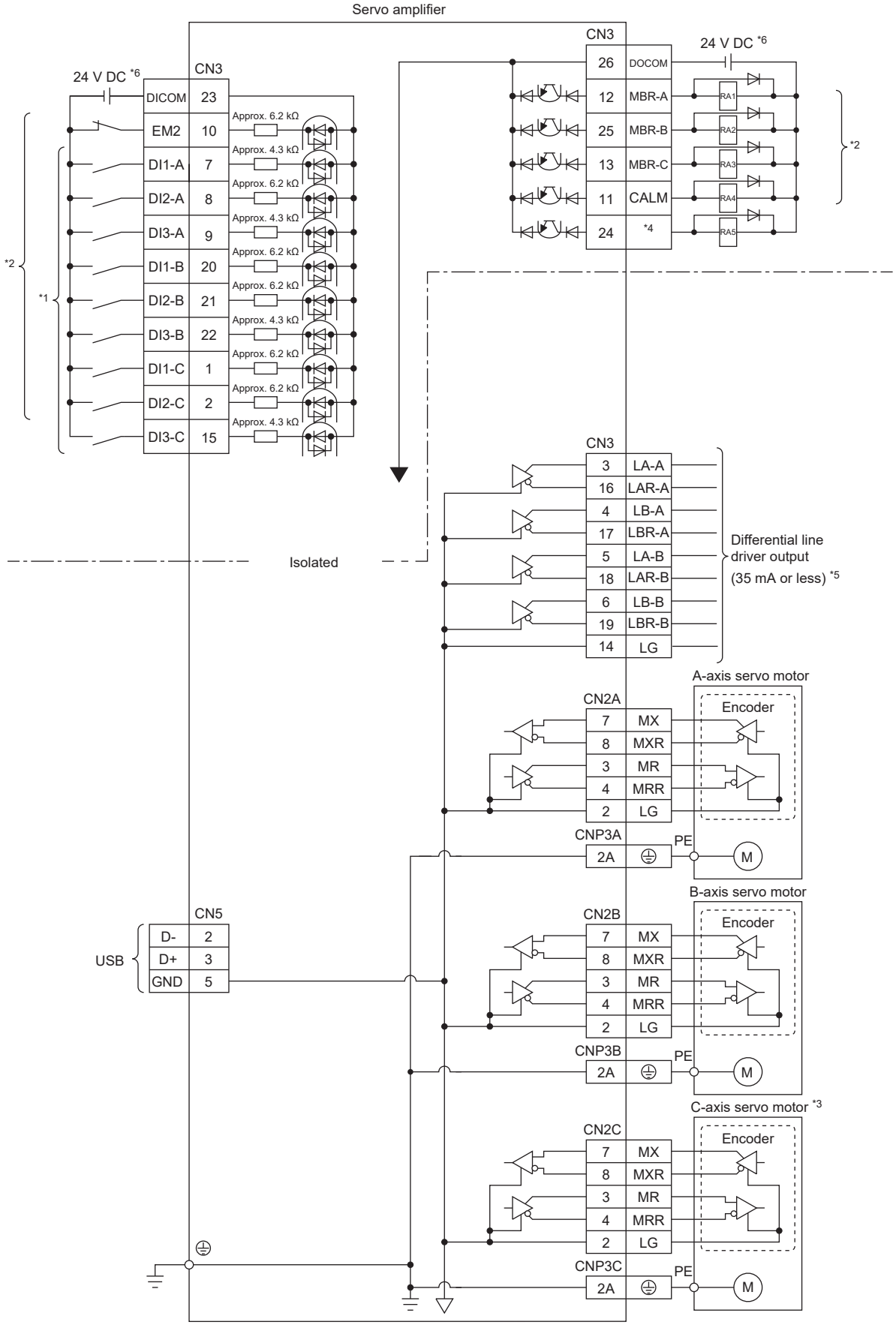

*1 Signals can be assigned to these pins with the controller setting. For details on the signals, refer to each controller manual.
*2 This diagram shows a sink I/O interface. For the source I/O interface, refer to the following.
☞ Page 137 Source I/O interface
*3 The diagram is for the MR-J5 3-axis servo amplifier.
*4 In the initial setting, CINP (AND in-position) is assigned to this pin. The device of the pin can be changed with [Pr. PD08].
*5 This signal cannot be used for the MR-J5W3-_B.
*6 Although the diagram shows the input signal and the output signal each using a separate 24 V DC power supply for illustrative purposes, the system can be configured to use a single 24 V DC power supply.

Internal connection diagram [A]

Point

Refer to the following for the CN8 connector.

☞ Page 447 USING STO FUNCTION

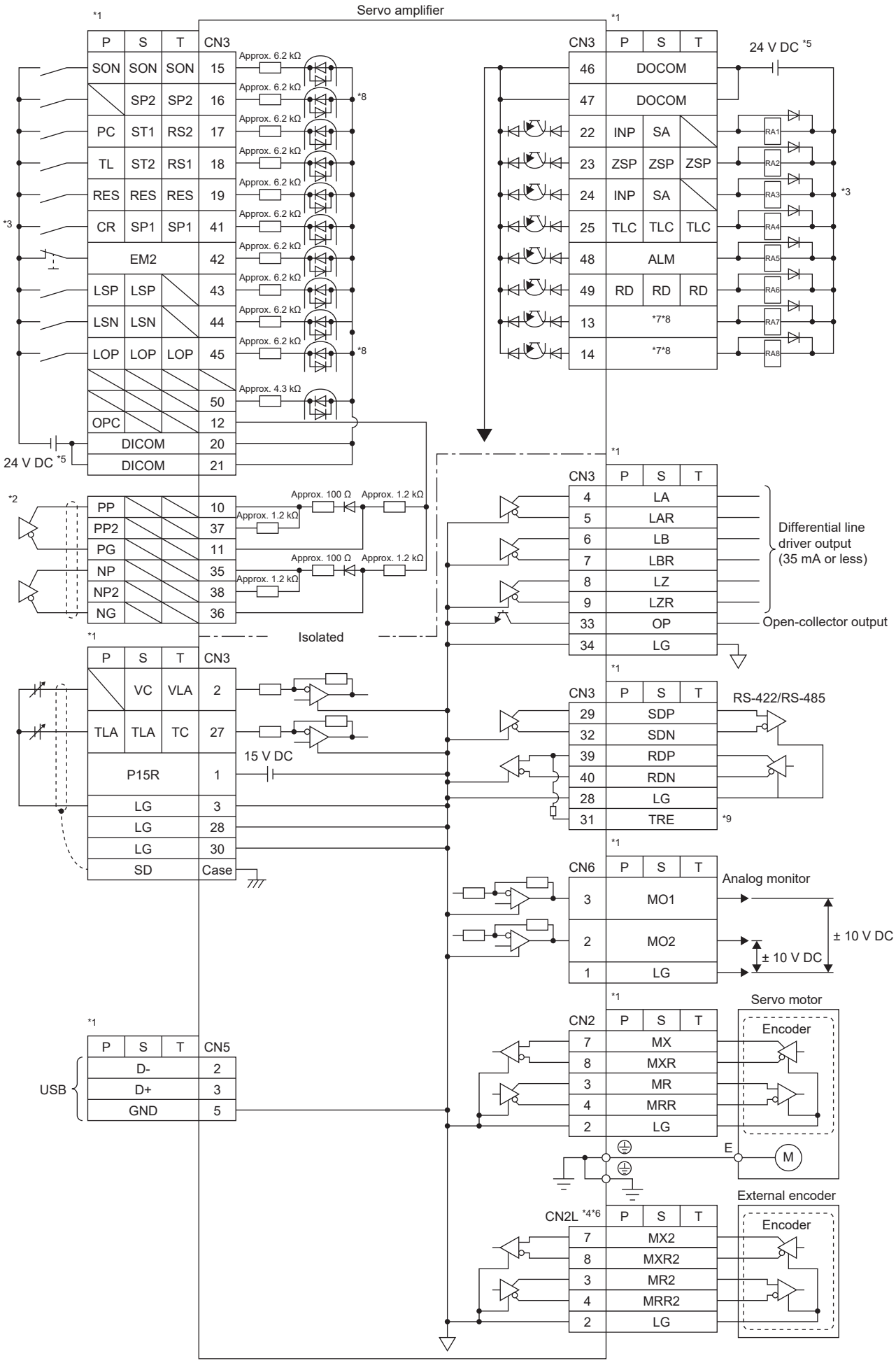
Servo amplifier
*1
P S T CN3
SON SON SON 15
SP2 SP2 16
PC ST1 RS2 17
TL ST2 RS1 18
RES RES RES 19
CR SP1 SP1 41
EM2 42
LSP LSP 43
LSN LSN 44
LOP LOP LOP 45
50
OPC 12
DICOM 20
DICOM 21
Approx. 6.2 kΩ
Approx. 4.3 kΩ
*3
*8
24 V DC *5
CN3 P S T
46 DOCOM
47 DOCOM
22 INP SA
23 ZSP ZSP ZSP
24 INP SA
25 TLC TLC TLC
48 ALM
49 RD RD RD
13 *7*8
14 *7*8
RA1
RA2
RA3
RA4
RA5
RA6
RA7
RA8
*2
PP 10
PP2 37
PG 11
NP 35
NP2 38
NG 36
Approx. 100 Ω
Approx. 1.2 kΩ
Isolated
CN3 P S T
4 LA
5 LAR
6 LB
7 LBR
8 LZ
9 LZR
33 OP
34 LG
Differential line driver output (35 mA or less)
Open-collector output
P S T CN3
VC VLA 2
TLA TLA TC 27
P15R 1
LG 3
LG 28
LG 30
SD Case
15 V DC
CN3 P S T
29 SDP
32 SDN
39 RDP
40 RDN
28 LG
31 TRE
*9
RS-422/RS-485
CN6 P S T
3 MO1
2 MO2
1 LG
Analog monitor
± 10 V DC
± 10 V DC
P S T CN5
D- 2
D+ 3
GND 5
USB
CN2 P S T
7 MX
8 MXR
3 MR
4 MRR
2 LG
Servo motor
Encoder
E
M
CN2L *4*6 P S T
7 MX2
8 MXR2
3 MR2
4 MRR2
2 LG
External encoder
Encoder

*1 P: Position control mode, S: Speed control mode, T: Torque control mode

*2 This is for the differential line driver pulse train input. For the open-collector pulse train input, connect as follows.

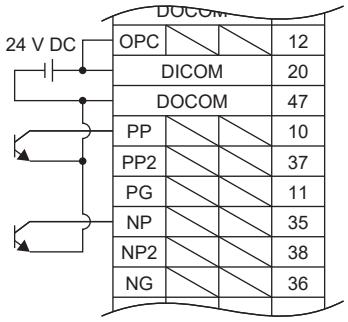

For sink input interface

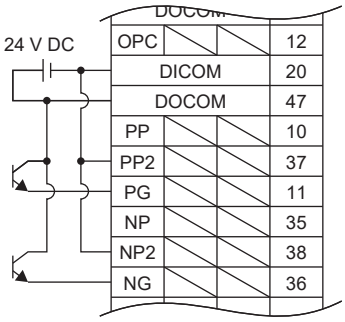

For source input interface

*3 This diagram shows a sink I/O interface. For the source I/O interface, refer to the following.
☞ Page 137 Source I/O interface

*4 The diagram is for the MR-J5-_A_-RJ_ servo amplifier. The MR-J5-_A_ servo amplifier does not have the CN2L connector.

*5 Although the diagram shows the input signal and the output signal each using a separate 24 V DC power supply for illustrative purposes, the system can be configured to use a single 24 V DC power supply.

*6 Refer to "Parts identification" in User's Manual (Introduction) for connecting an external encoder.

*7 Output devices are not assigned by default. Assign the output devices with [Pr. PD47] as necessary.

*8 If the MR-J5-_A_-RJ_ is used, the values in the CN3-16 pin and the CN3-45 pin are approximately 4.3 kΩ.

*9 When using the RS-422/RS-485 communication function, connect between TRE and RDN of the final axis servo amplifier. For details, refer to "COMMUNICATION FUNCTION (MITSUBISHI ELECTRIC AC SERVO PROTOCOL) [A]" in the following manual.
MR-J5 User's Manual (Function)

Detailed explanation of interfaces

The details of I/O signal interfaces stated in the following section (refer to the I/O signal interface type in the table) are as follows. Refer to the section and connect them with external devices.

☞ Page 98 Signal (device) explanation

Digital input interface DI-1

This is an input circuit in which the photocoupler cathode side is the input terminal. Transmit signals from a sink (open collector) type transistor output, relay switch, etc. The following connection diagram is for sink input.

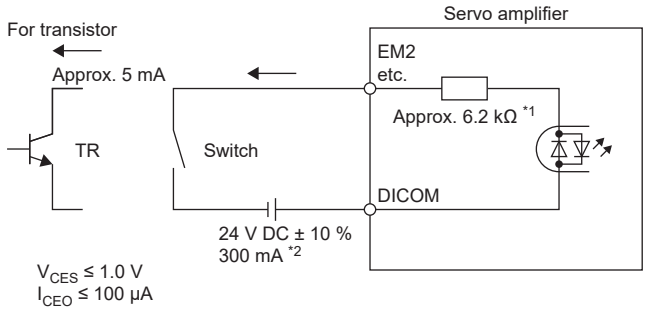

*1 For interfaces of the CN3-1 pin, CN3-10 pin, and CN3-19 pin of the MR-J5-_G_-RJ_, approximately 4.3 kΩ.
For interfaces of the CN3-7 pin, CN3-9 pin, CN3-15 pin, and CN3-22 pin of the MR-J5W_-_G_, approximately 4.3 kΩ.
For interfaces of the CN3-16 pin, CN3-45 pin, and CN3-50 pin of the MR-J5-_A_-RJ_, approximately 4.3 kΩ.
For interfaces of the CN3-4A pin, CN3-4B pin, and CN3-6B pin of the MR-J5-_G_-HS_, approximately 4.3 kΩ.
☞ Page 120 Internal connection diagram [G]
☞ Page 130 Internal connection diagram [A]

*2 It is 500 mA for the MR-J5-_A_.

The following diagram is for when the CN3-10 pin and the CN3-35 pin are used as digital input interfaces.

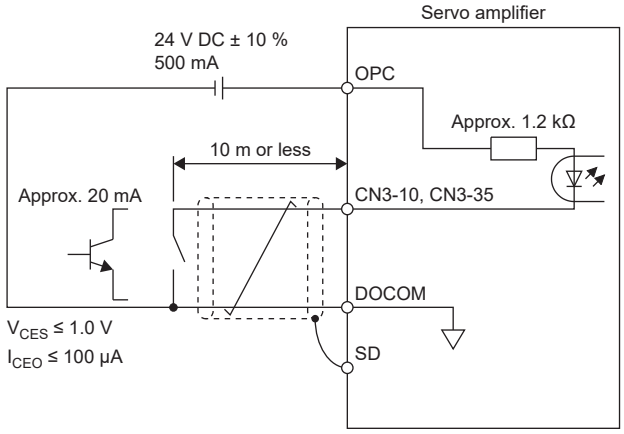

Refer to the following for source input.

☞ Page 137 Source I/O interface

Digital output interface DO-1

This is a circuit in which the collector of the output transistor is the output terminal. When the output transistor is turned on, the current flows to the collector terminal.

A lamp, relay, or photocoupler can be driven. Install a diode (D) for an inductive load, or install an inrush current suppressing resistor (R) for a lamp load.

(Rated current: 40 mA or less, maximum current: 50 mA or less, inrush current: 100 mA or less) A maximum of 2.6 V voltage drop occurs in the servo amplifier. The following connection diagram is for the sink output.

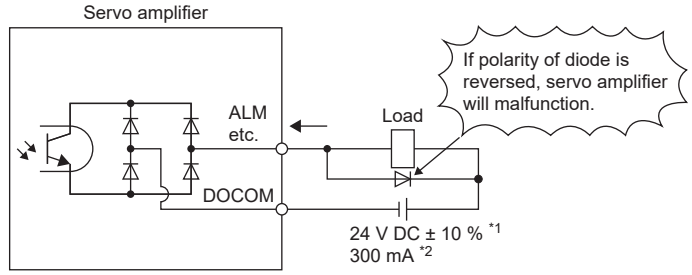

*1 If the voltage drop (a maximum of 2.6 V) interferes with the relay operation, apply high voltage (a maximum of 26.4 V) from an external source.

*2 It is 500 mA for the MR-J5-_A_.

Refer to the following for the source output.

☞ Page 137 Source I/O interface

Pulse train input interface DI-2 [A]

Give a pulse train signal in the differential line driver type or open-collector type.

■Differential line driver type

• Interface

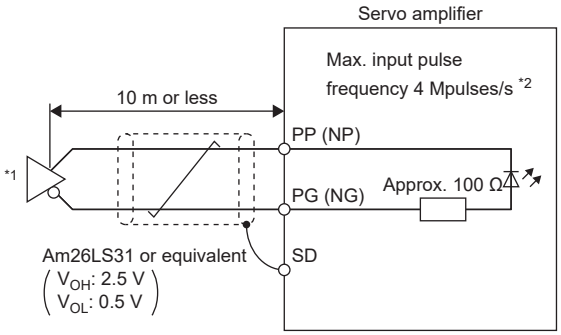

*1 A photocoupler is used as the pulse train input interface. Therefore, this circuit may not operate properly due to reduction in current if a resistor is connected to the pulse train signal line.

*2 Set [Pr. PA13.2] to "0" to use the input pulse frequency of 4 Mpulses/s.

• Input pulse condition

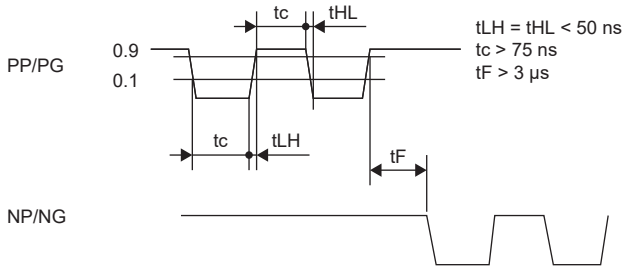

■Open-collector type

• Interface

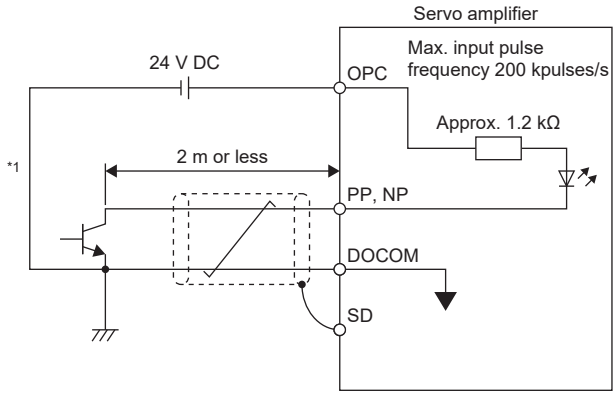

*1 A photocoupler is used as the pulse train input interface. Therefore, this circuit may not operate properly due to reduction in current if a resistor is connected to the pulse train signal line.

• Input pulse condition

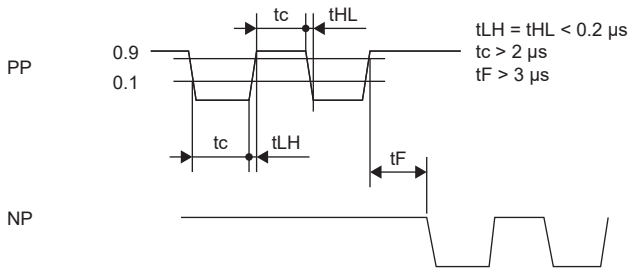

Encoder output pulse DO-2

■Differential line driver type

• Interface

Maximum output current: 35 mA

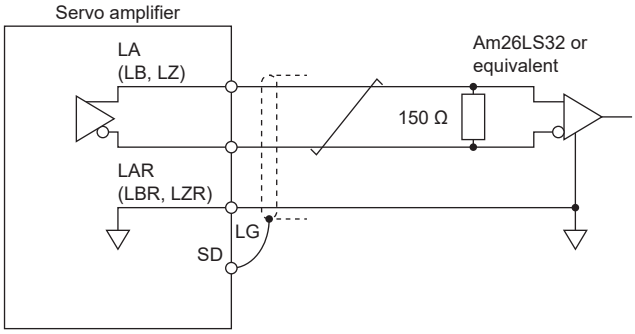

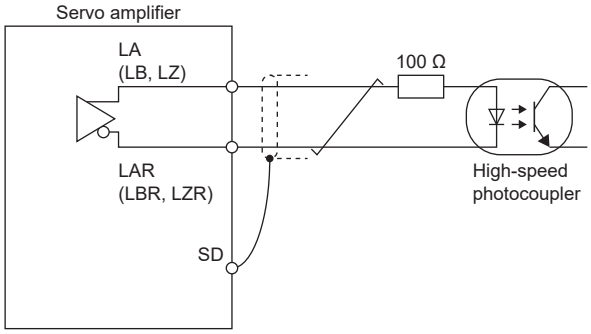

• Output pulse

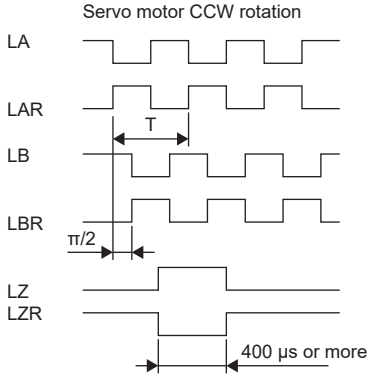

■Open-collector type

• Interface

Maximum output current: 35 mA

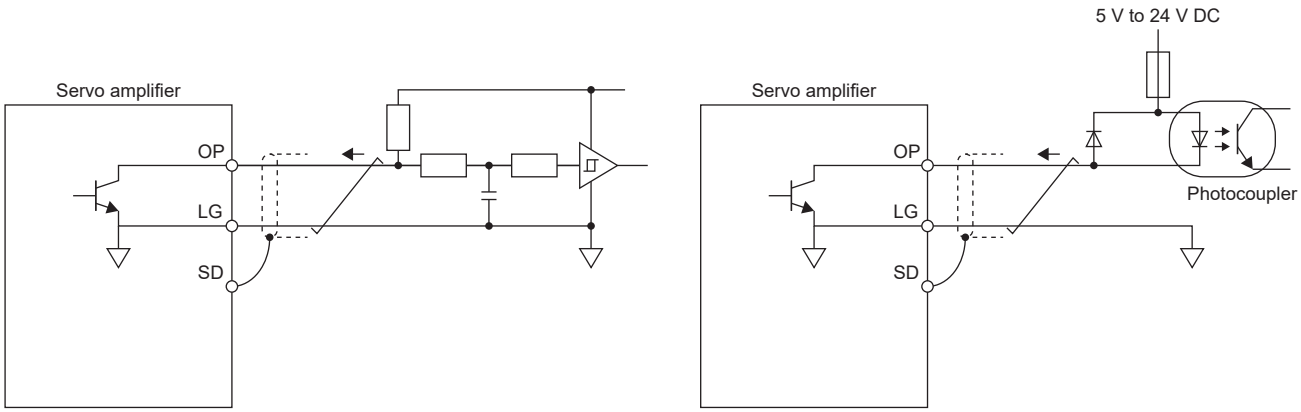

Analog input AI-1

Input impedance 10 kΩ to 12 kΩ

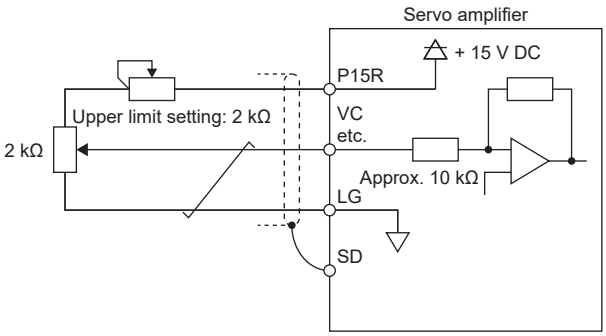

Analog output AO-1

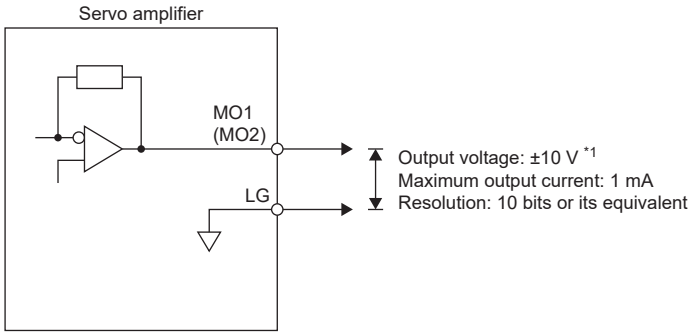

*1 The output voltage varies depending on the output contents.

Source I/O interface

For the servo amplifiers in this manual, source type I/O interfaces can be used.

Digital input interface DI-1

This is an input circuit in which the anode of the photocoupler is the input terminal. Transmit signals from a source (open-collector) type transistor output, relay switch, etc.

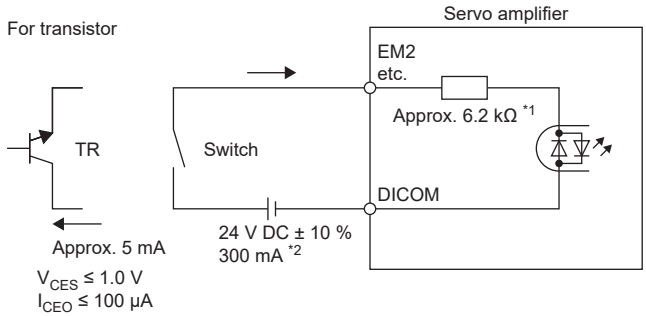

*1 For interfaces of the CN3-1 pin and CN3-10 pin of the MR-J5-_G_, approximately 4.3 kΩ.
For interfaces of the CN3-1 pin, CN3-10 pin, and CN3-19 pin of the MR-J5-_G_-RJ_, approximately 4.3 kΩ.
For interfaces of the CN3-7 pin, CN3-9 pin, CN3-15 pin, and CN3-22 pin of the MR-J5W_-_G_, approximately 4.3 kΩ.
For interfaces of the CN3-16 pin, CN3-45 pin, and CN3-50 pin of the MR-J5-_A_-RJ_, approximately 4.3 kΩ.
For interfaces of the CN3-4A pin, CN3-4B pin, and CN3-6B pin of the MR-J5-_G_-HS_, approximately 4.3 kΩ.
☞ Page 120 Internal connection diagram [G]
☞ Page 130 Internal connection diagram [A]

*2 It is 500 mA for the MR-J5-_A_.

Digital output interface DO-1

This is a circuit in which the emitter of the output transistor is the output terminal. When the output transistor is turned on, the current flows from the output terminal to a load.
A maximum of 2.6 V voltage drop occurs in the servo amplifier.

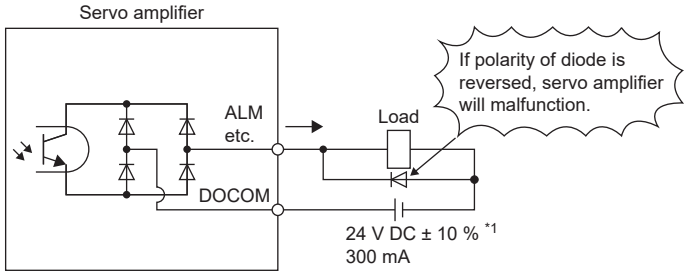

*1 If the voltage drop (a maximum of 2.6 V) interferes with the relay operation, apply high voltage (a maximum of 26.4 V) from an external source.

Pulse train input interface DI-2 [A]

Transmit a pulse train signal in the open-collector type.

- Interface

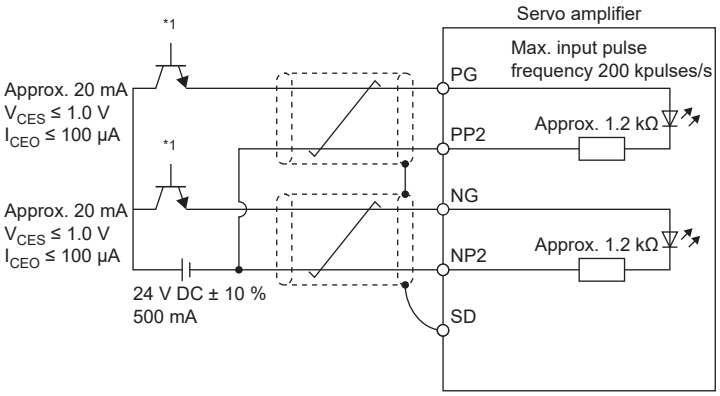

*1 A photocoupler is used as the pulse train input interface. Therefore, this circuit may not operate properly due to reduction in current if a resistor is connected to the pulse train signal line.

- Input pulse condition

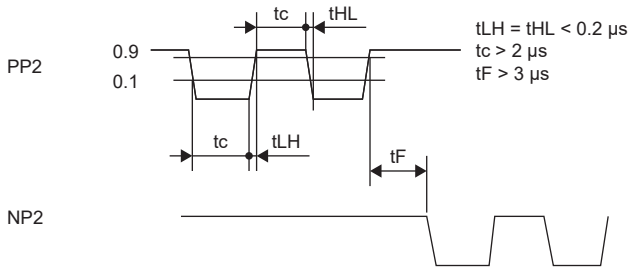

3.7 Servo motor with an electromagnetic brake

Precautions

- For specifications such as the power supply capacity and operation delay time of the electromagnetic brake, and for selecting the surge absorber for the electromagnetic brake, refer to "Characteristics of electromagnetic brake" in the following manual.

📖Rotary Servo Motor User's Manual (For MR-J5)

- The electromagnetic brake on the servo motor is designed to hold the motor shaft. Do not use it for normal braking.
- Incorrect wiring, service life, or the mechanical structure (e.g. when coupled via a timing belt) may cause the electromagnetic brake to be unable to hold the motor shaft. To ensure safety, install a stopper on the machine side.
- If it is assumed that a hazardous situation may arise when the equipment power is off or a product malfunction occurs, use a servo motor with an electromagnetic brake or provide an external brake system for holding purpose to prevent such hazard.
- Configure an electromagnetic brake circuit that interlocks with the external emergency stop switch.
- Malfunction of MBR (Electromagnetic brake interlock), ALM (Malfunction), or CALM (AND malfunction) causes malfunction of the brake.
- Before operating the servo motor, confirm that the electromagnetic brake operates properly.
- For the power supply of the electromagnetic brake, use the power supply designed exclusively for the electromagnetic brake.
- If using EM2 (Forced stop 2), use MBR (Electromagnetic brake interlock) for operating the electromagnetic brake.
- If using the servo motor with the electromagnetic brake, the electromagnetic brake will operate when the power (24 V DC) turns off.
- If using the servo motor with the electromagnetic brake, turn off the servo-on command after the servo motor stops.

Connection diagram

1-axis servo amplifier

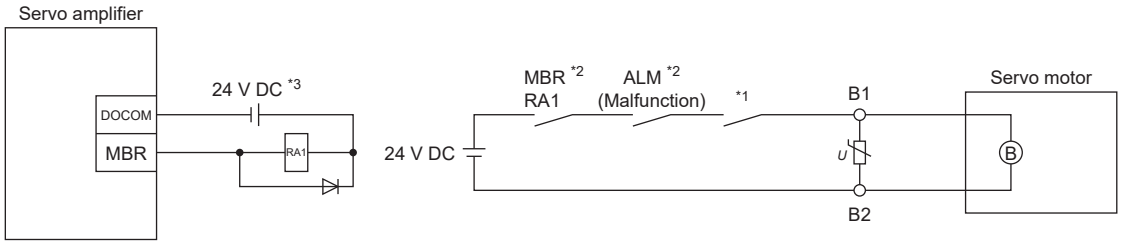

*1 The circuit should be shut off in conjunction with the emergency stop switch.
*2 Malfunction of MBR or ALM causes malfunction of the brake.
*3 Do not use the 24 V DC interface power supply for the electromagnetic brake.

Multi-axis servo amplifier

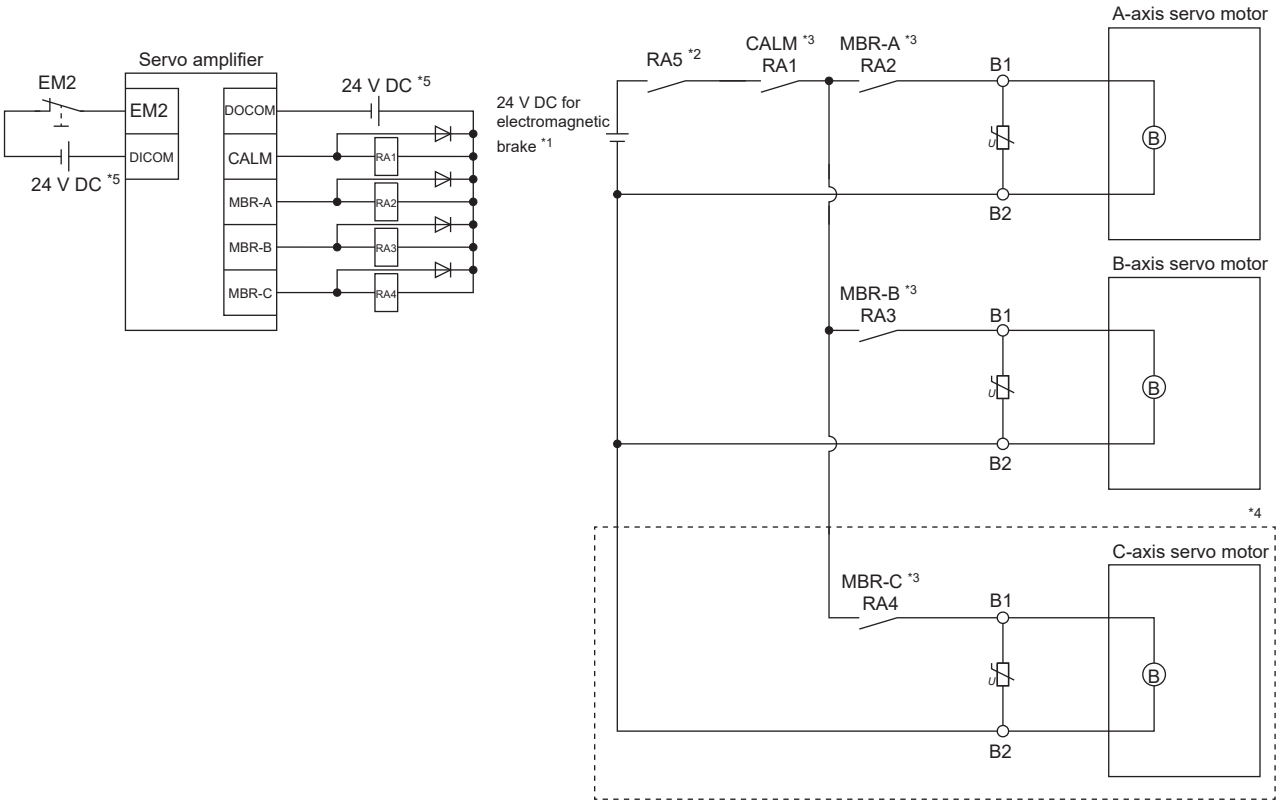

*1 Do not use the 24 V DC interface power supply for the electromagnetic brake.
*2 The circuit should be shut off in conjunction with the emergency stop switch.
*3 Malfunction of MBR_ or CALM causes malfunction of the brake.
*4 This connection is for the MR-J5W3-_ servo amplifier.
*5 Although the diagram shows the input signal and the output signal each using a separate 24 V DC power supply for illustrative purposes, the system can be configured to use a single 24 V DC power supply.

3.8 SSCNET III cable connection [B]

Point

Do not look directly at the light emitted from the CN1A and CN1B connectors of the servo amplifier or the end of the SSCNET III cable. The light may cause discomfort when it enters your eyes.

SSCNET III cable connection

Connect the SSCNET III cable connected to the controller or the preceding servo amplifier to the CN1A connector. Connect the SSCNET III cable connected to the succeeding servo amplifier to the CN1B connector. Put the cap that came with the servo amplifier on the CN1B connector of the final axis servo amplifier.

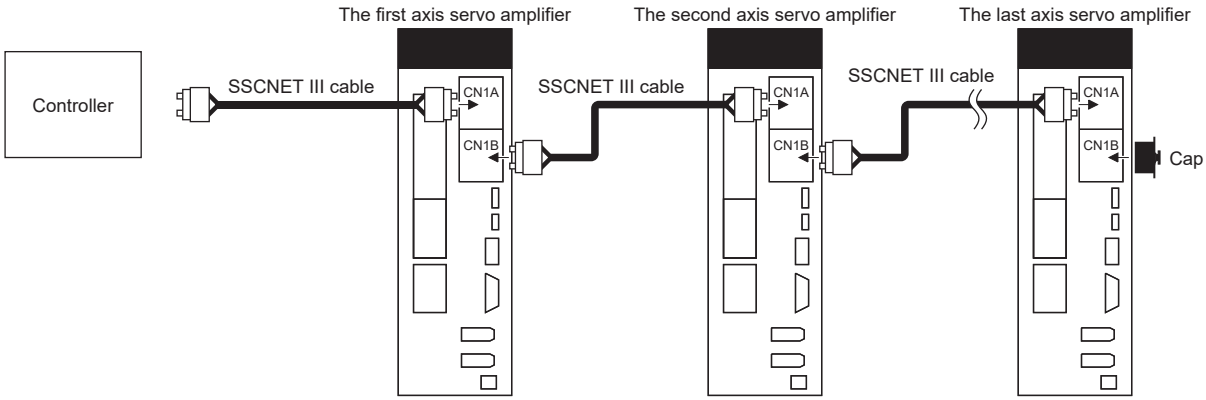

How to connect/disconnect cable

Point

- Caps are put on the CN1A and CN1B connectors of the servo amplifier to protect the optical devices inside the connectors from dust and dirt. For this reason, do not remove the caps until immediately before connecting the SSCNET III cable. Also, put the caps right after disconnecting the SSCNET III cable.
- While the CN1A and CN1B connectors are connected with the SSCNET III cable, keep the connector caps and the optical cord end protecting tube of the SSCNET III cable in the plastic bag with a slide fastener that came with the SSCNET III cable to prevent them from dirt.
- When having the servo amplifier repaired due to a malfunction or similar problem, put the caps on the CN1A and CN1B connectors. Failing to do so may damage the optical devices during transportation. In this case, replacing the optical devices is required.

Connection

1. For the SSCNET III cable shipped from the factory, the tube for protecting the optical cord end covers the end of the connector. Remove the tube.
2. Remove the caps for the CN1A and CN1B connectors of the servo amplifier.
3. While holding the tabs of the SSCNET III cable connector, insert the connector into the CN1A and CN1B connectors of the servo amplifier until the tabs click. If the optical cord ends are dirty, optical transmission is interrupted, causing a malfunction. If they are dirty, wipe the dirt off with a nonwoven wiper, etc. Do not use a solvent such as alcohol.

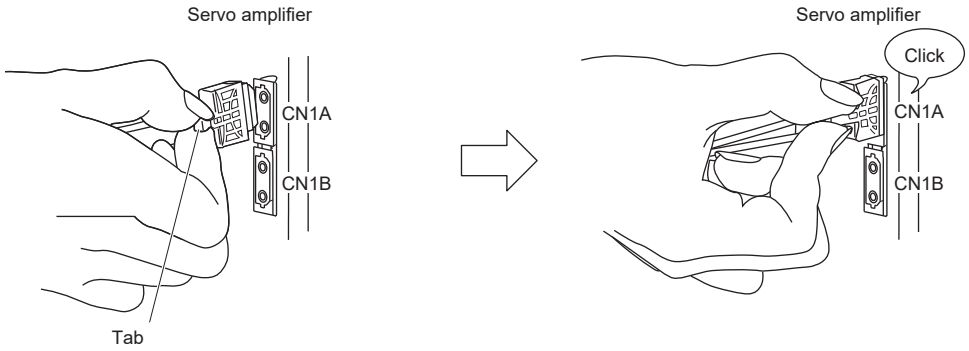

Disconnection

Hold the tabs of the SSCNET III cable connector and pull out the connector.
After pulling out the SSCNET III cable from the servo amplifier, put the caps on the connectors of the servo amplifier to protect them from dirt. For the SSCNET III cable, cover the end of the connectors with the tube for protecting the optical cord end.

3.9 Grounding

The servo amplifier supplies power to the servo motor by switching on and off a power transistor. Depending on the wiring and ground wire routing, the servo amplifier may be affected by the switching noise (due to di/dt and dv/dt) of the transistor. To prevent such a fault, refer to the following diagram and ground it.

For information on how to comply with the EMC Directive, refer to the following guidelines.

EMC Installation Guidelines

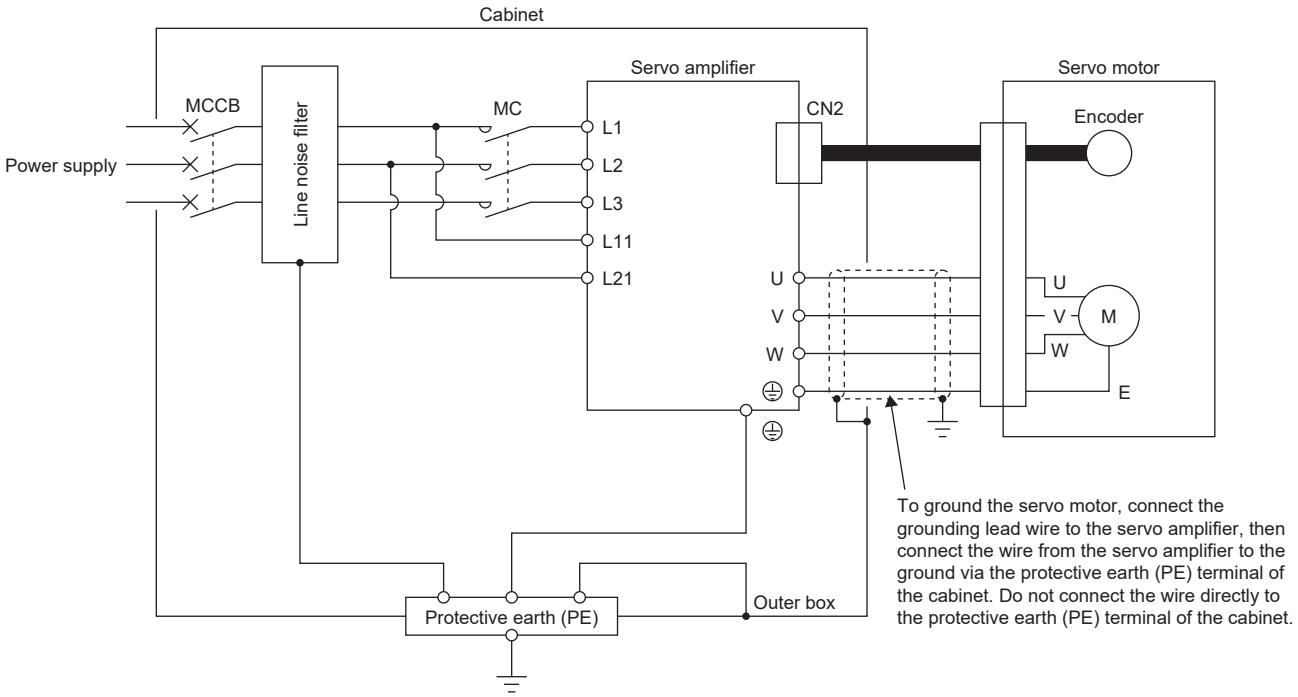

4 DIMENSIONS

4.1 MR-J5-_G_

200 V class

Point

The following are examples of the MR-J5-_G-RJ servo amplifiers.

MR-J5-10G_/MR-J5-20G_/MR-J5-40G_

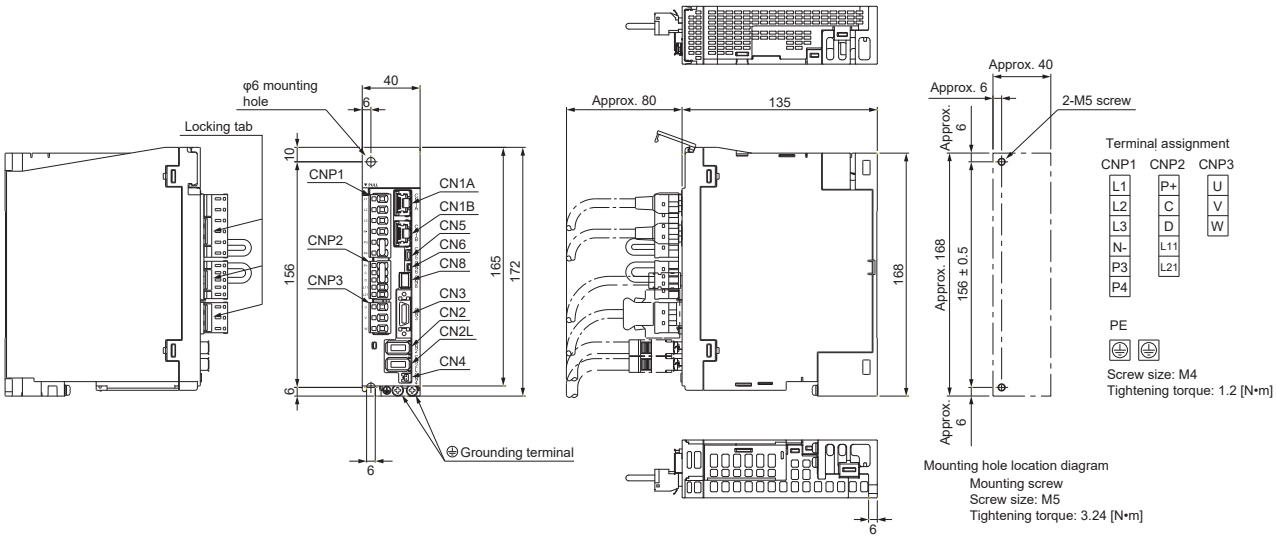

MR-J5-60G_

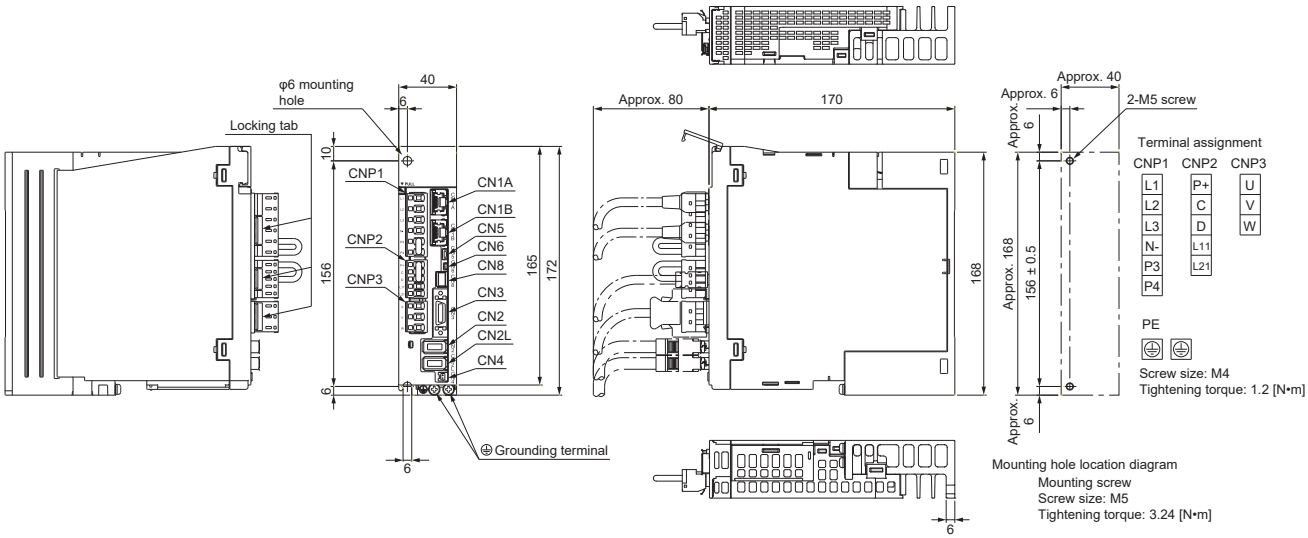

MR-J5-70G_/MR-J5-100G_

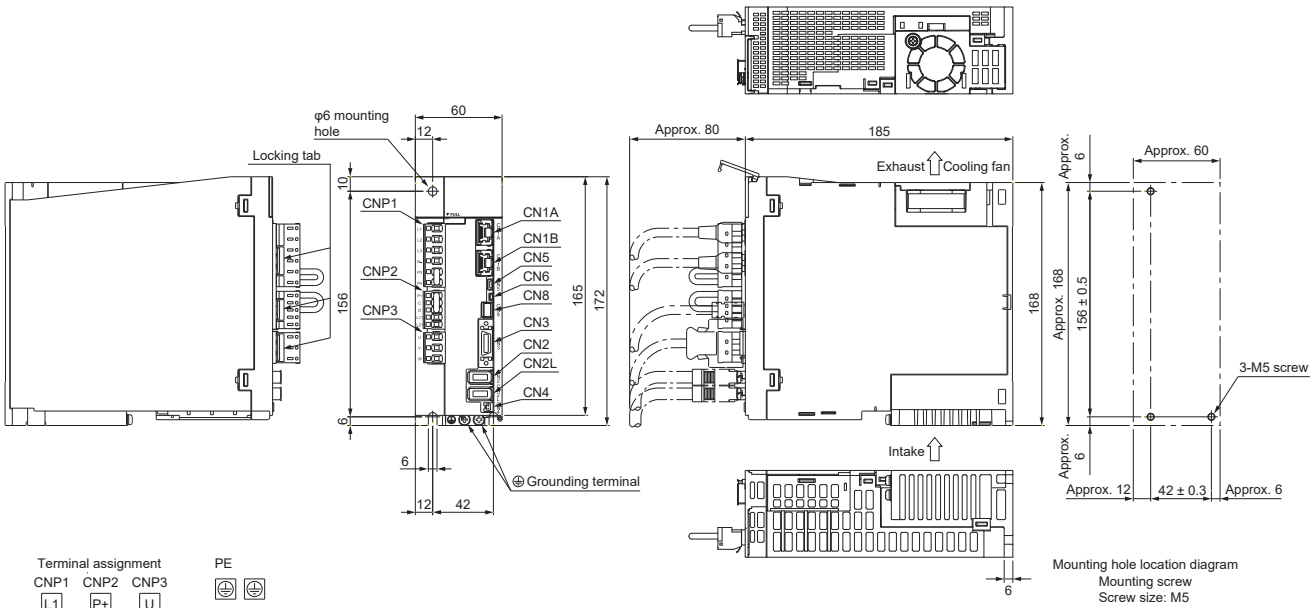

Terminal assignment

CNP1	CNP2	CNP3
L1	P+	U
L2	C	V
L3	D	W
N-	L11	
P3	L21	
P4		

PE

Screw size: M4
Tightening torque: 1.2 [N•m]

Mounting hole location diagram
Mounting screw
Screw size: M5
Tightening torque: 3.24 [N•m]

MR-J5-200G_/MR-J5-350G_

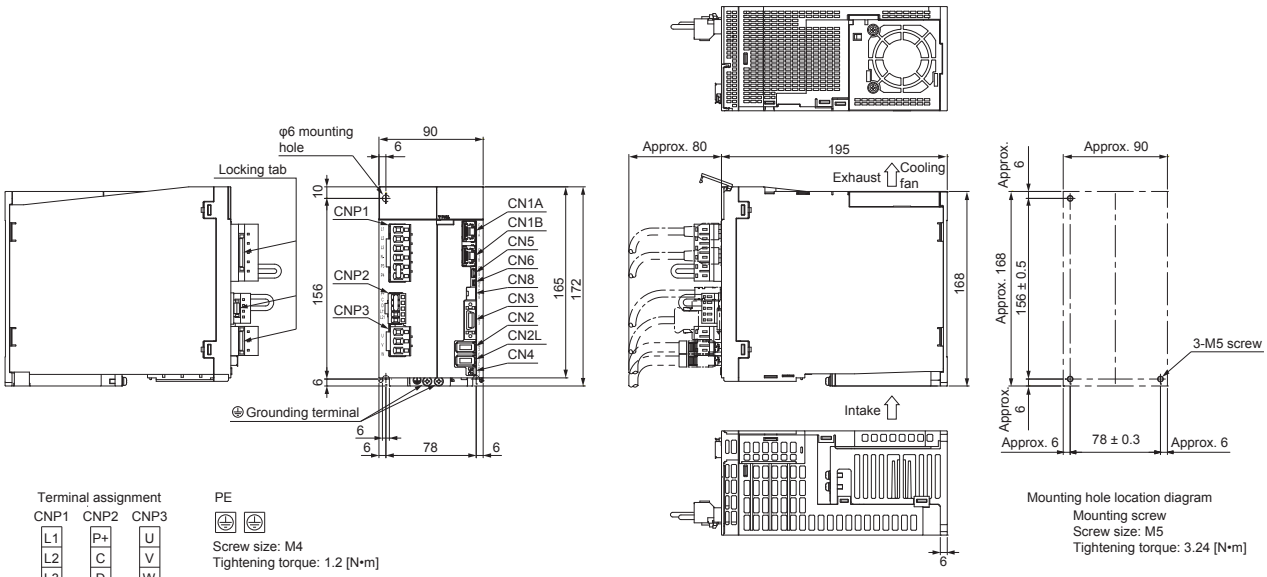

Terminal assignment

CNP1	CNP2	CNP3
L1	P+	U
L2	C	V
L3	D	W
N-	L11	
P3	L21	
P4		

PE

Screw size: M4
Tightening torque: 1.2 [N•m]

Mounting hole location diagram
Mounting screw
Screw size: M5
Tightening torque: 3.24 [N•m]

MR-J5-500G_

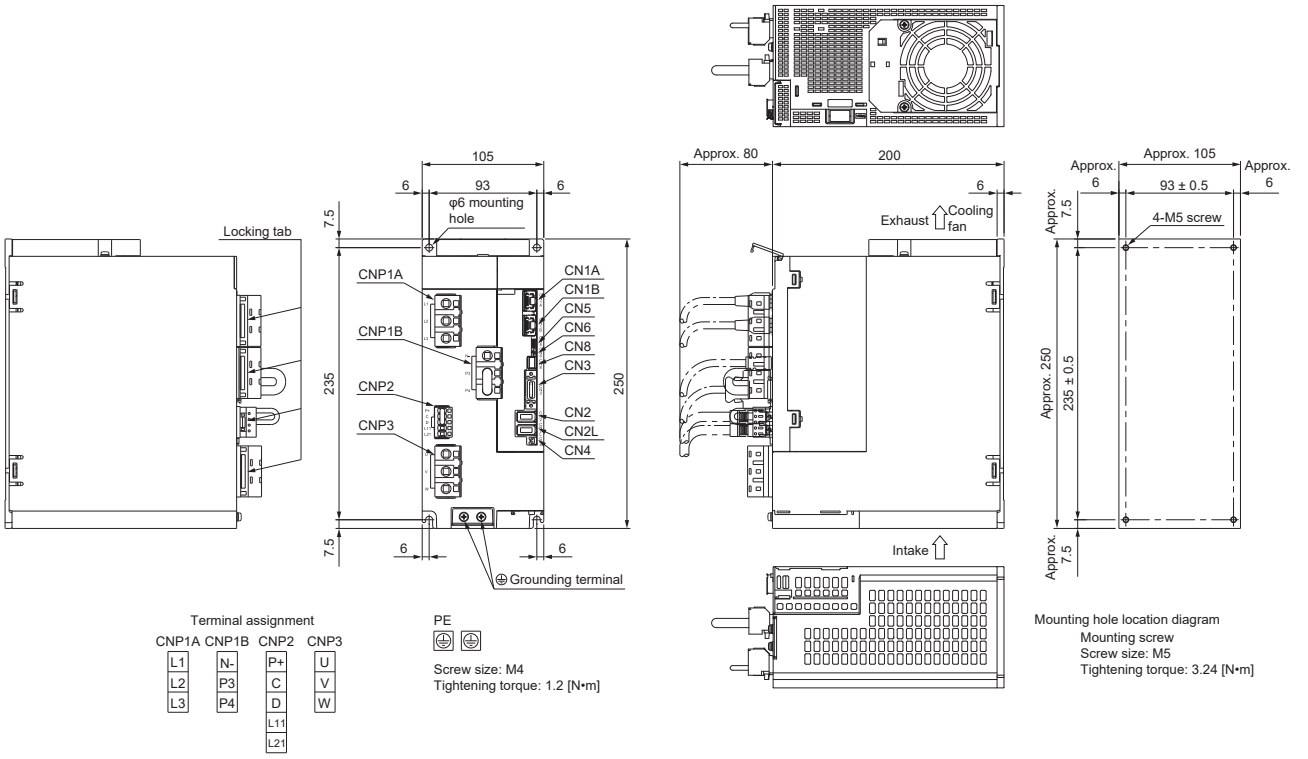

Terminal assignment

CNP1A	CNP1B	CNP2	CNP3
L1	N-	P+	U
L2	P3	C	V
L3	P4	D	W
		L11	
		L21	

PE

Screw size: M4
Tightening torque: 1.2 [N•m]

Mounting hole location diagram
Mounting screw
Screw size: M5
Tightening torque: 3.24 [N•m]

MR-J5-700G_

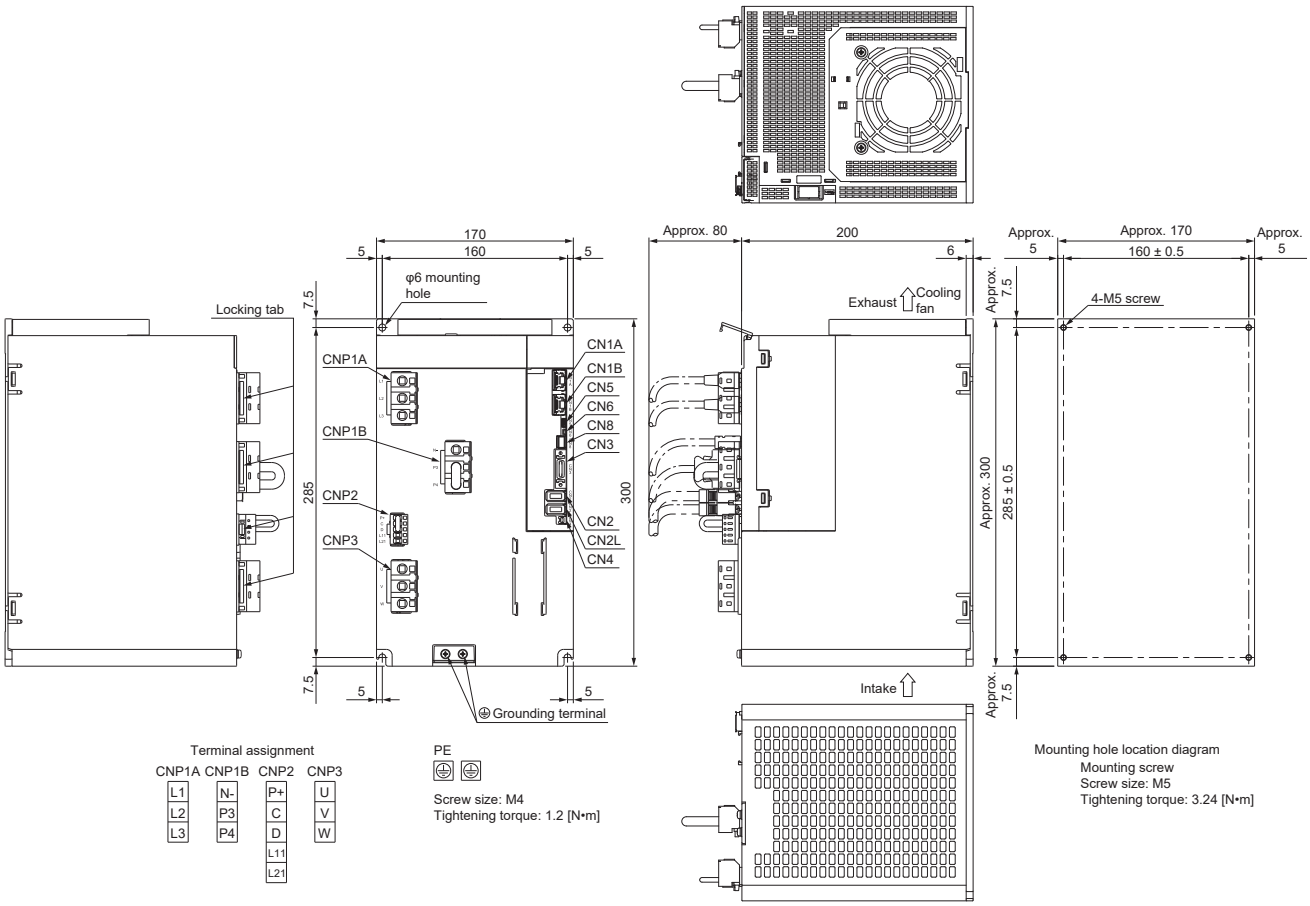

Terminal assignment

CNP1A	CNP1B	CNP2	CNP3
L1	N-	P+	U
L2	P3	C	V
L3	P4	D	W
		L11	
		L21	

PE

Screw size: M4
Tightening torque: 1.2 [N•m]

Mounting hole location diagram
Mounting screw
Screw size: M5
Tightening torque: 3.24 [N•m]

400 V class

MR-J5-60G4_/MR-J5-100G4_

Point

The following are examples of the MR-J5-_G4-RJ servo amplifiers.

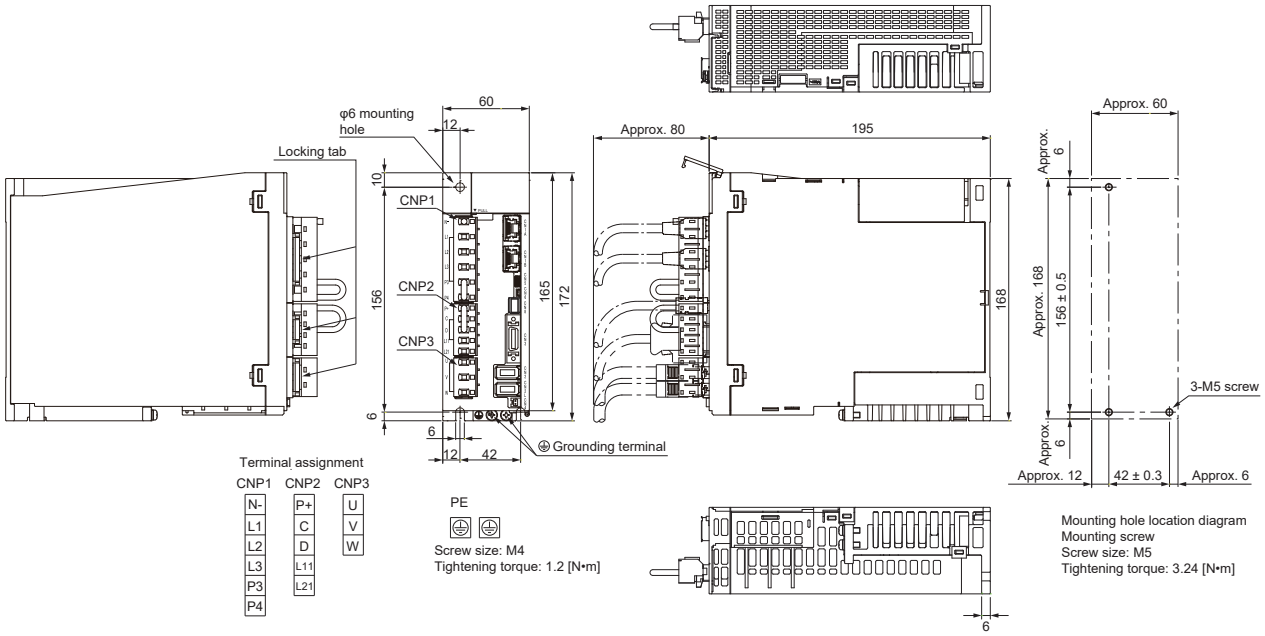

MR-J5-200G4_/MR-J5-350G4_

Point

The following are examples of the MR-J5-_G4-RJ servo amplifiers.

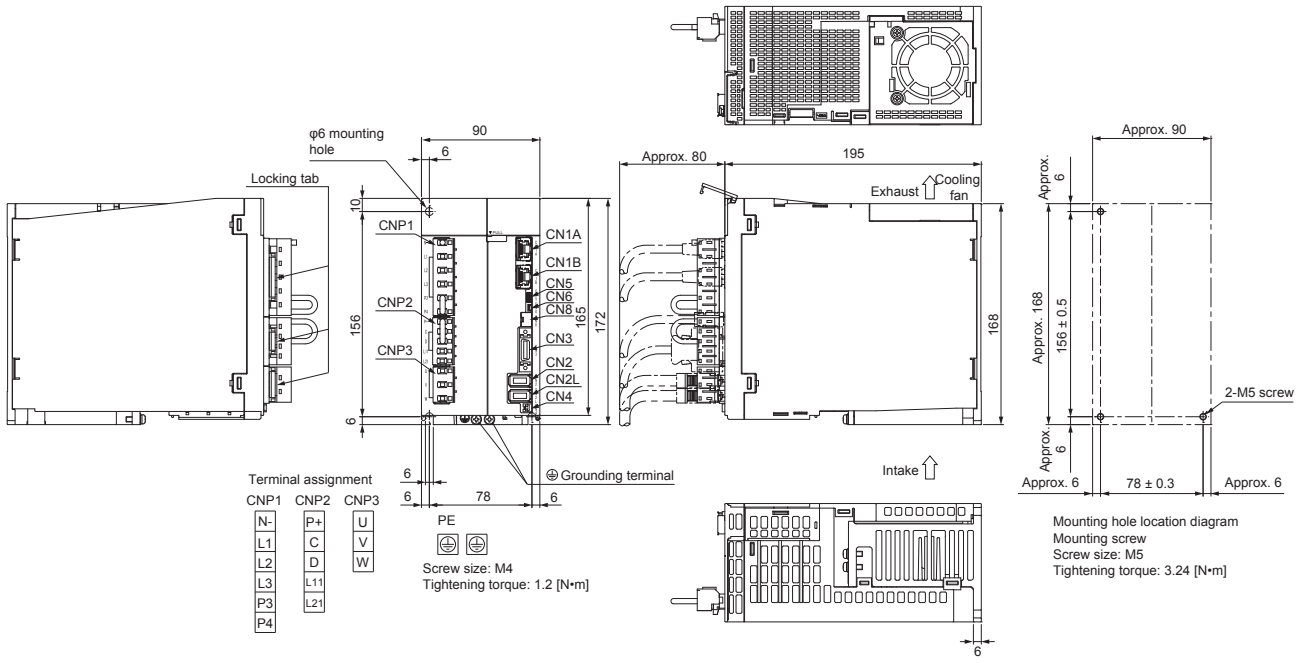

MR-J5-500G4/MR-J5-700G4

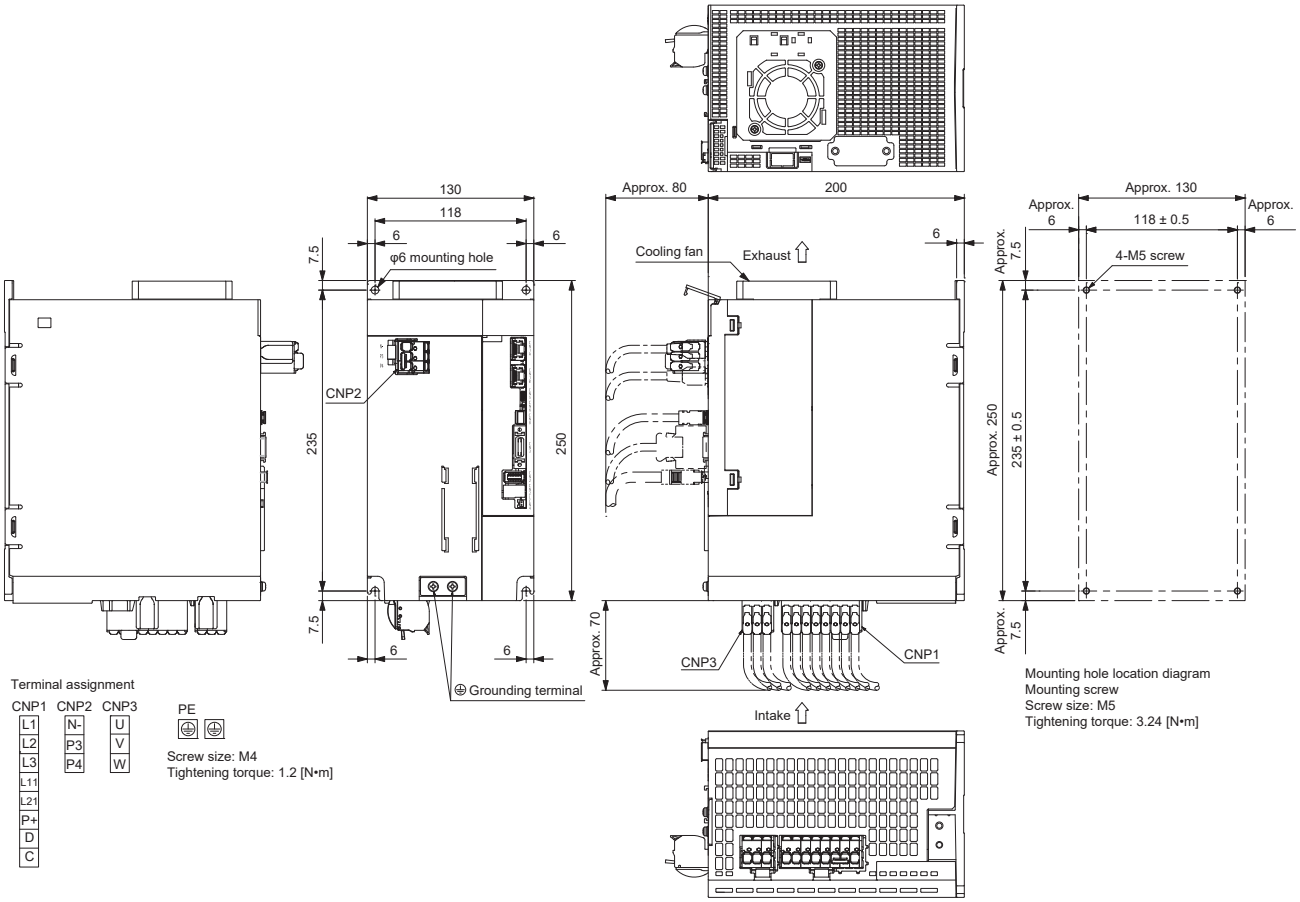

Terminal assignment

CNP1	CNP2	CNP3
L1	N-	U
L2	P3	V
L3	P4	W
L11		
L21		
P+		
D		
C		

PE

Screw size: M4
Tightening torque: 1.2 [N•m]

Mounting hole location diagram
Mounting screw
Screw size: M5
Tightening torque: 3.24 [N•m]

MR-J5-500G4-HS_/MR-J5-700G4-HS_

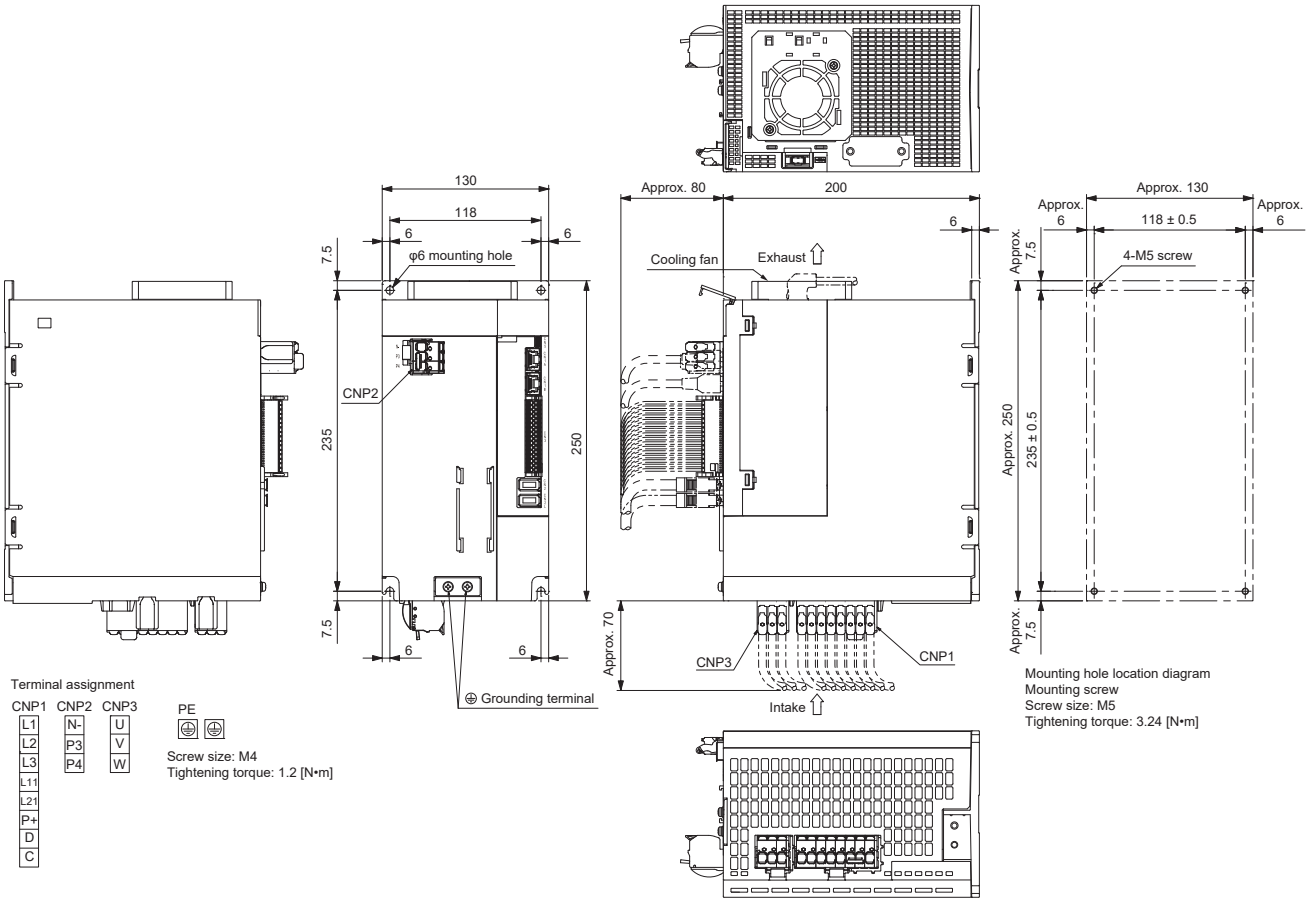

4.2 MR-J5W_-_G_

MR-J5W2-22G_/MR-J5W2-44G_

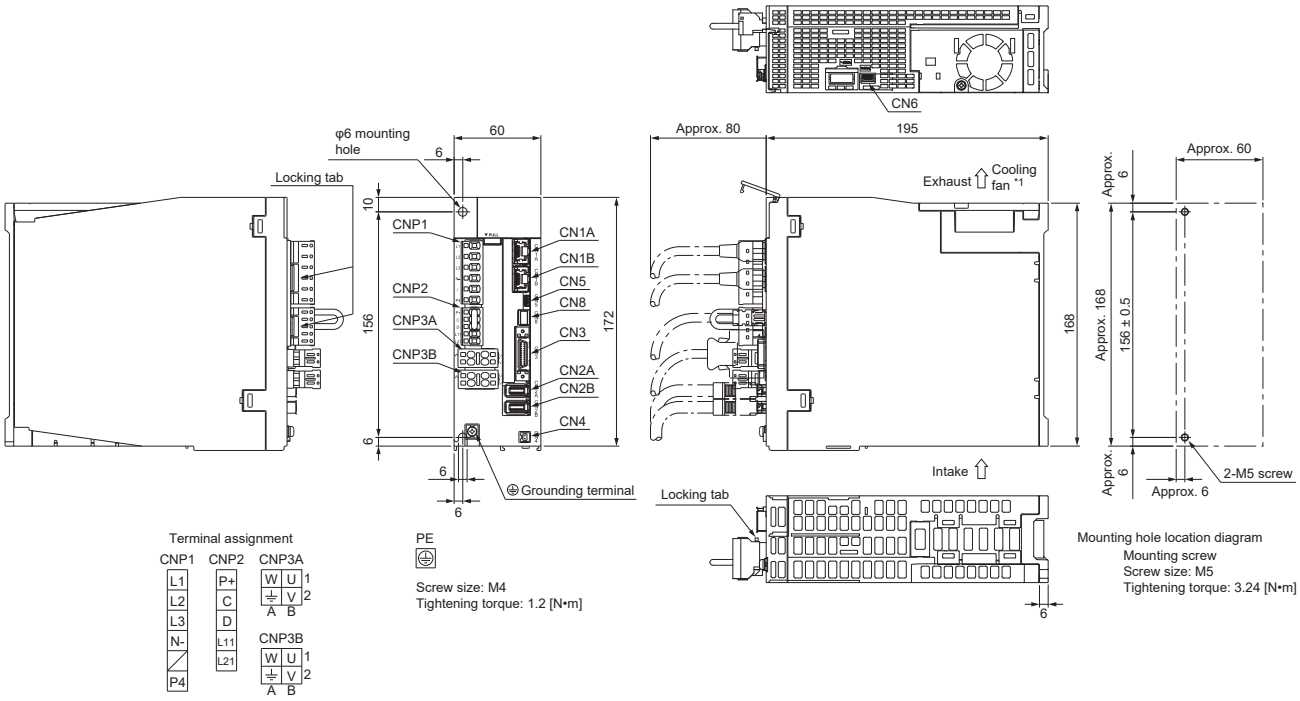

*1 Only the MR-J5W2-44G_ servo amplifiers have a cooling fan.

MR-J5W2-77G_/MR-J5W2-1010G_

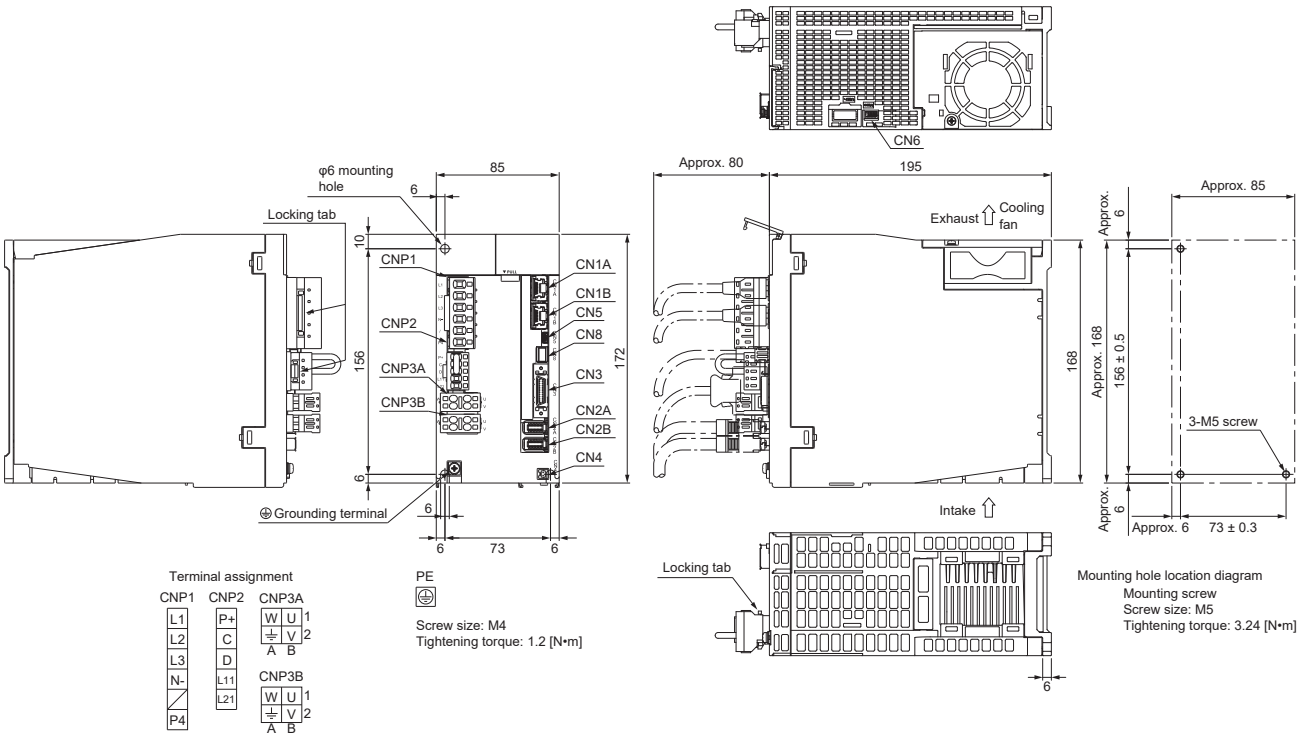

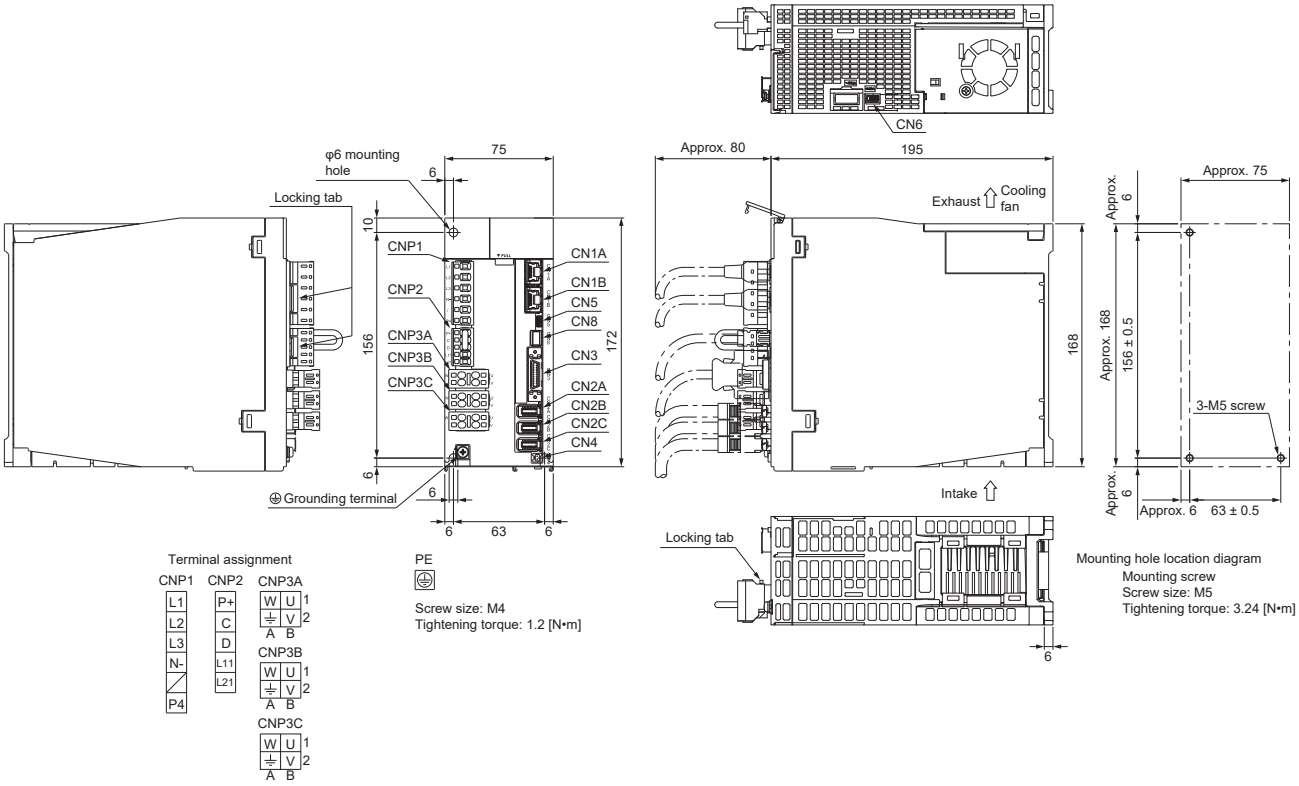
φ6 mounting hole
Locking tab
75
6
10
156
172
CNP1
CNP2
CNP3A
CNP3B
CNP3C
CN1A
CN1B
CN5
CN8
CN3
CN2A
CN2B
CN2C
CN4
Grounding terminal
6
63
6
CN6
Approx. 80
195
Exhaust
Cooling fan
168
Intake
Locking tab
6
Approx. 75
Approx. 6
Approx. 168
156 ± 0.5
3-M5 screw
Approx. 6
63 ± 0.5
Terminal assignment
CNP1
L1
L2
L3
N-
P4
CNP2
P+
C
D
L11
L21
CNP3A
W U 1
V 2
A B
CNP3B
W U 1
V 2
A B
CNP3C
W U 1
V 2
A B
PE
Screw size: M4
Tightening torque: 1.2 [N•m]
Mounting hole location diagram
Mounting screw
Screw size: M5
Tightening torque: 3.24 [N•m]

4.3 MR-J5-_B_

Point

The following are examples of the MR-J5-_B_-RJ servo amplifiers.

200 V class

MR-J5-10B_/MR-J5-20B_/MR-J5-40B_

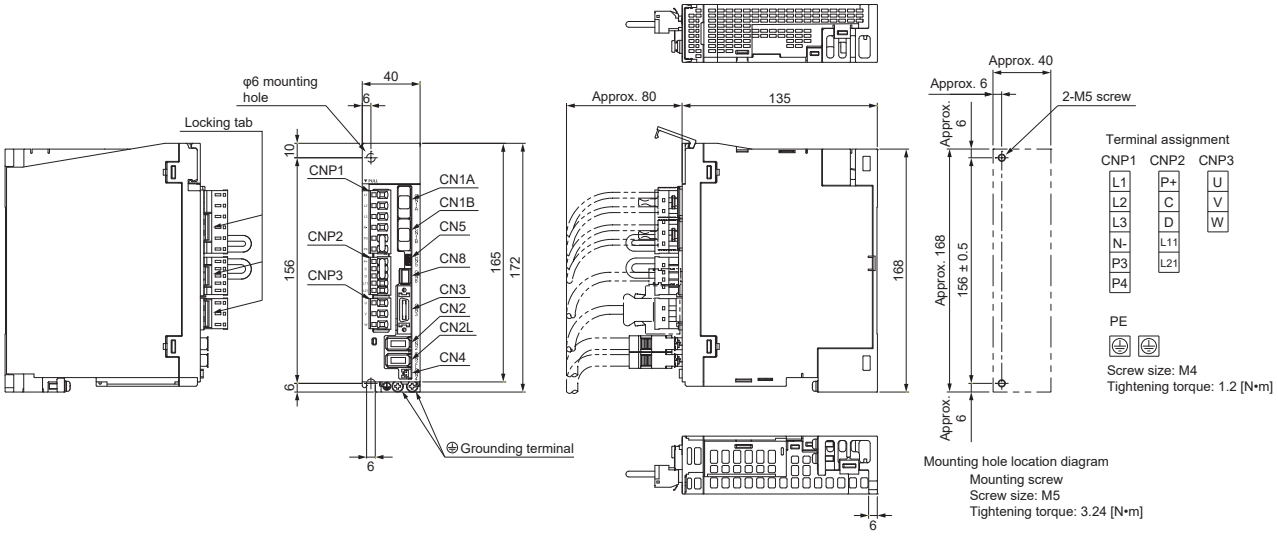

MR-J5-60B_

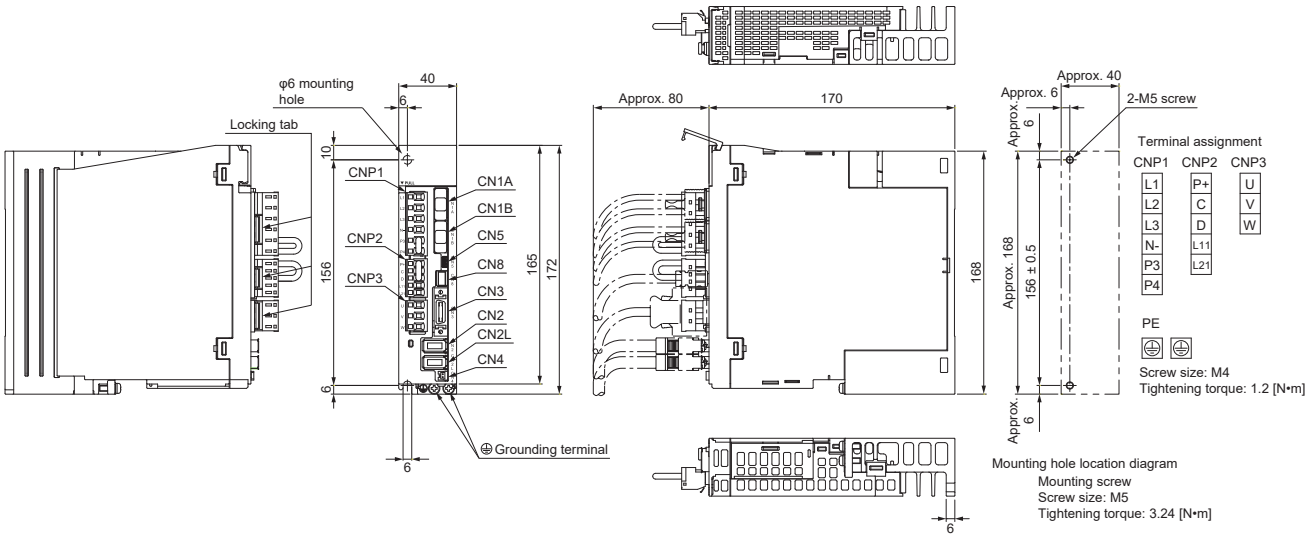

MR-J5-70B_/MR-J5-100B_

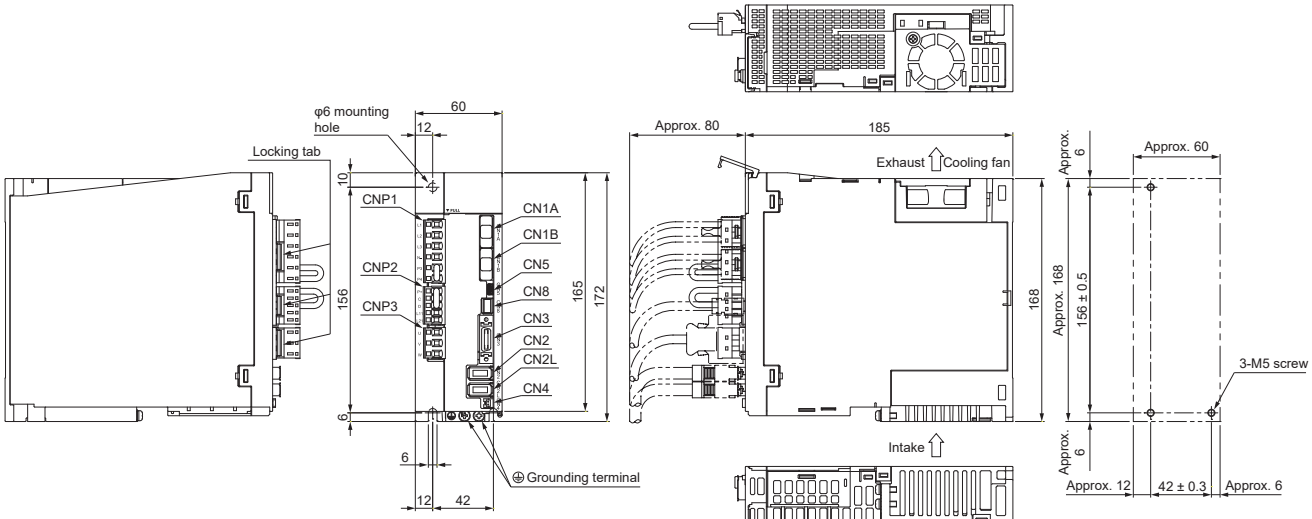

Terminal assignment

CNP1	CNP2	CNP3
L1	P+	U
L2	C	V
L3	D	W
N-	L11	
P3	L21	
P4		

PE

Screw size: M4
Tightening torque: 1.2 [N•m]

Mounting hole location diagram
Mounting screw
Screw size: M5
Tightening torque: 3.24 [N•m]

MR-J5-200B_/MR-J5-350B_

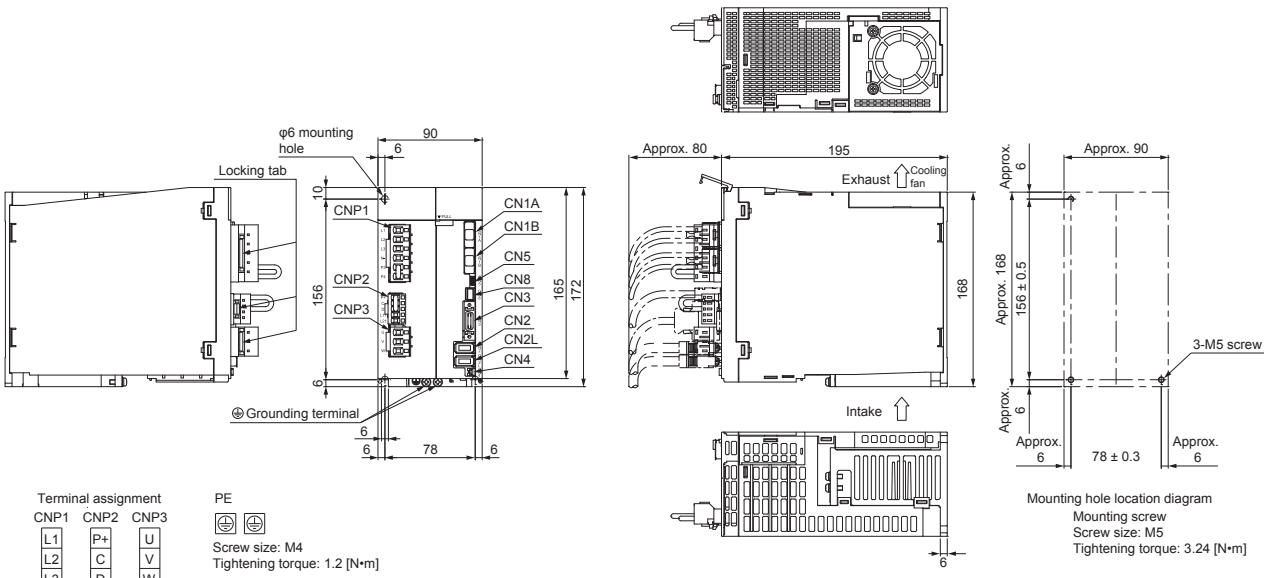

Terminal assignment

CNP1	CNP2	CNP3
L1	P+	U
L2	C	V
L3	D	W
N-	L11	
P3	L21	
P4		

PE

Screw size: M4
Tightening torque: 1.2 [N•m]

Mounting hole location diagram
Mounting screw
Screw size: M5
Tightening torque: 3.24 [N•m]

MR-J5-500B_

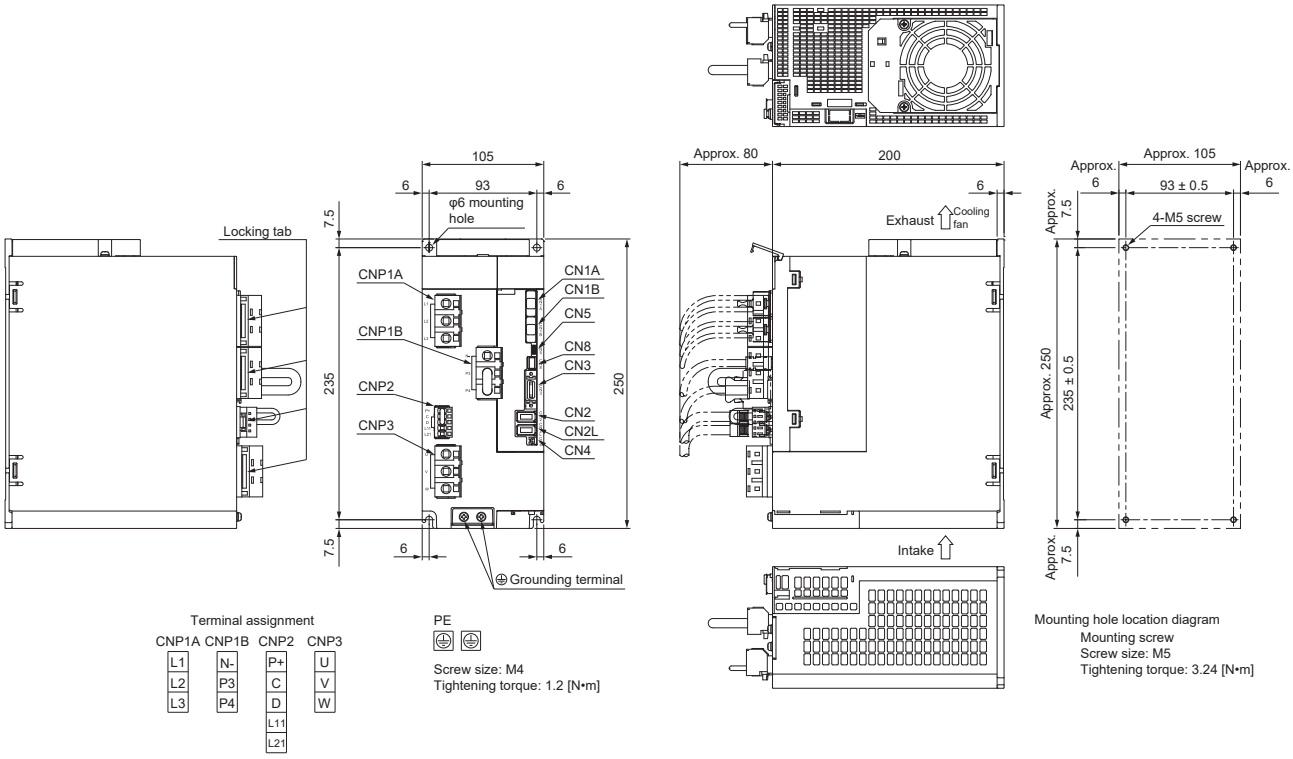

Terminal assignment

CNP1A	CNP1B	CNP2	CNP3
L1	N-	P+	U
L2	P3	C	V
L3	P4	D	W
		L11	
		L21	

PE

Screw size: M4
Tightening torque: 1.2 [N•m]

Mounting hole location diagram
Mounting screw
Screw size: M5
Tightening torque: 3.24 [N•m]

MR-J5-700B_

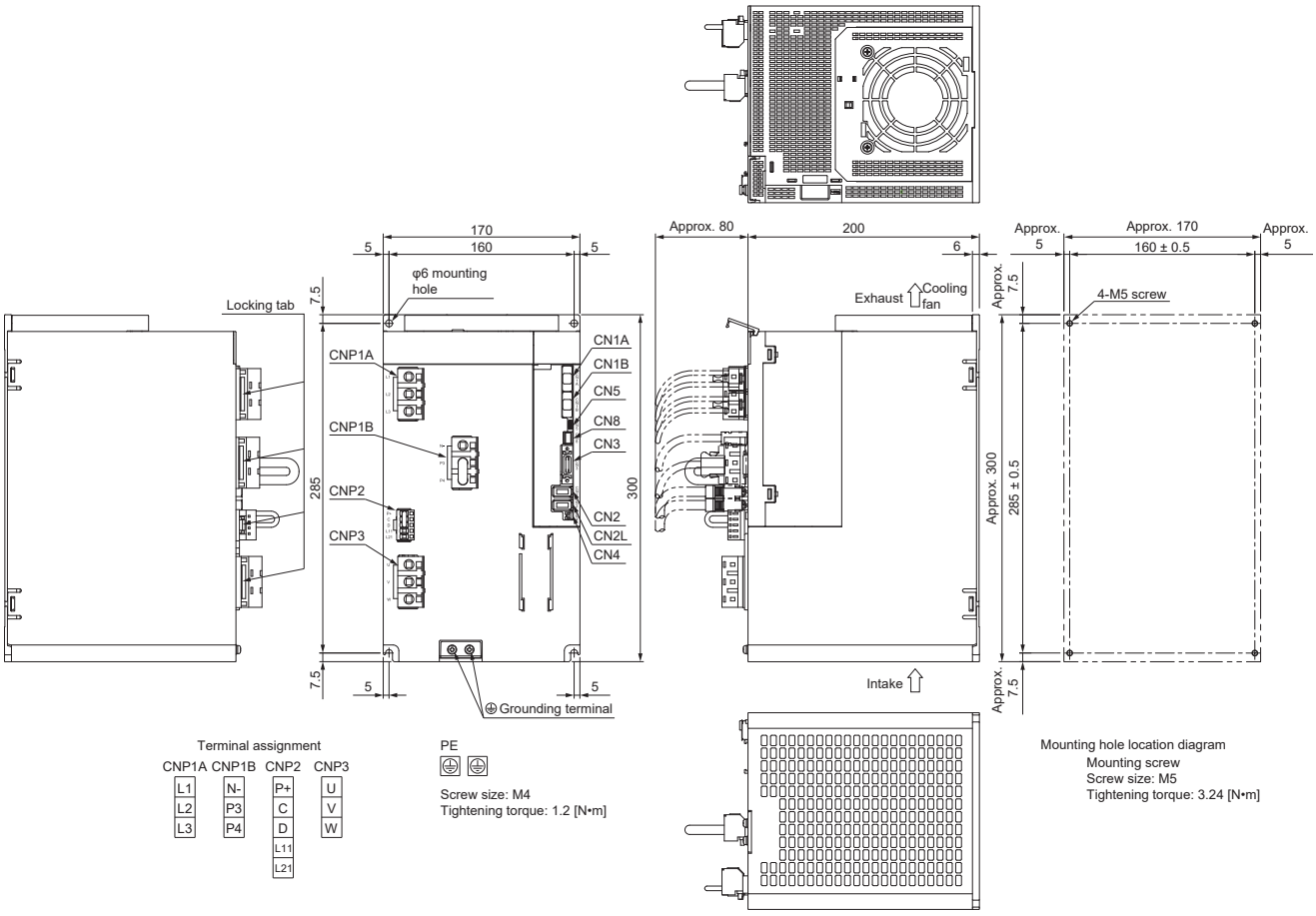

Terminal assignment

CNP1A	CNP1B	CNP2	CNP3
L1	N-	P+	U
L2	P3	C	V
L3	P4	D	W
		L11	
		L21	

PE

Screw size: M4
Tightening torque: 1.2 [N•m]

Mounting hole location diagram
Mounting screw
Screw size: M5
Tightening torque: 3.24 [N•m]

400 V class

MR-J5-60B4_/MR-J5-100B4_

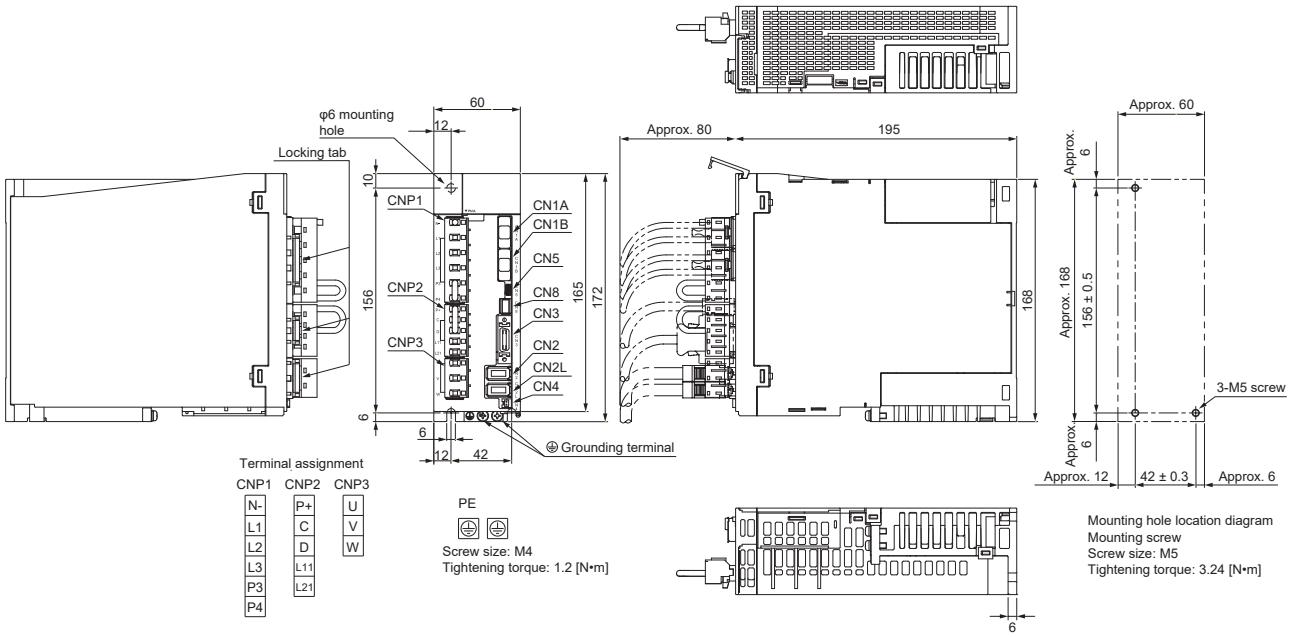

MR-J5-200B4_/MR-J5-350B4_

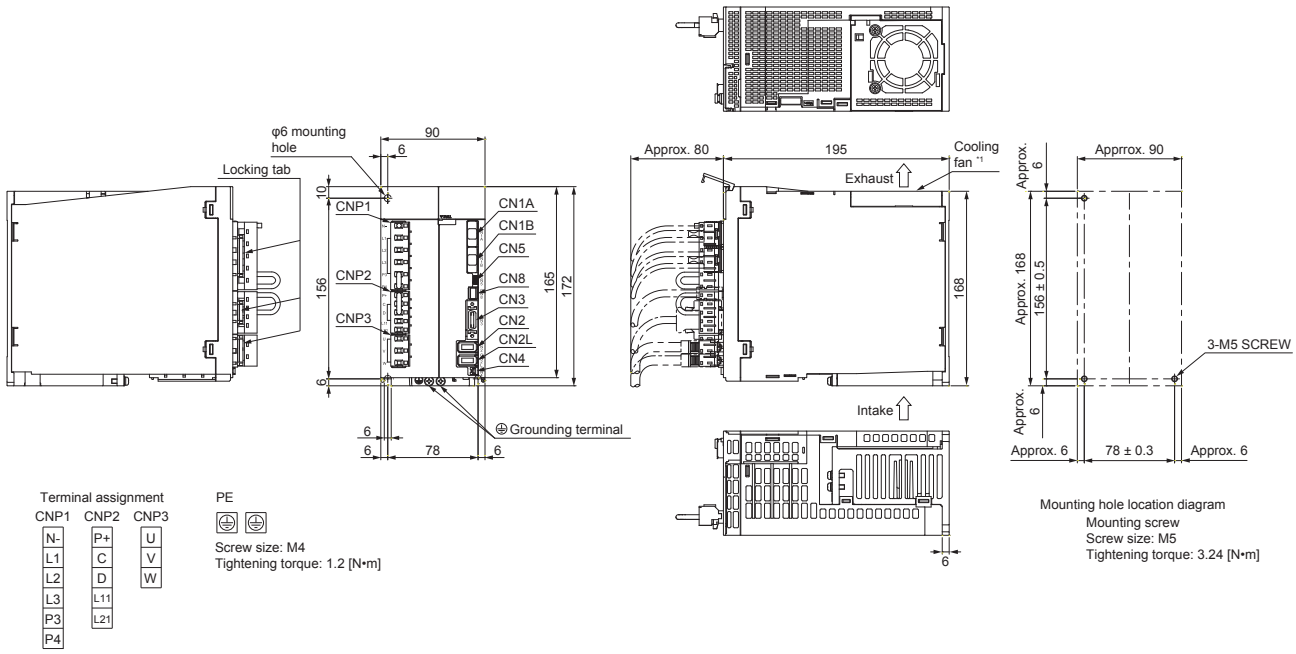

MR-J5-500B4_/MR-J5-700B4_

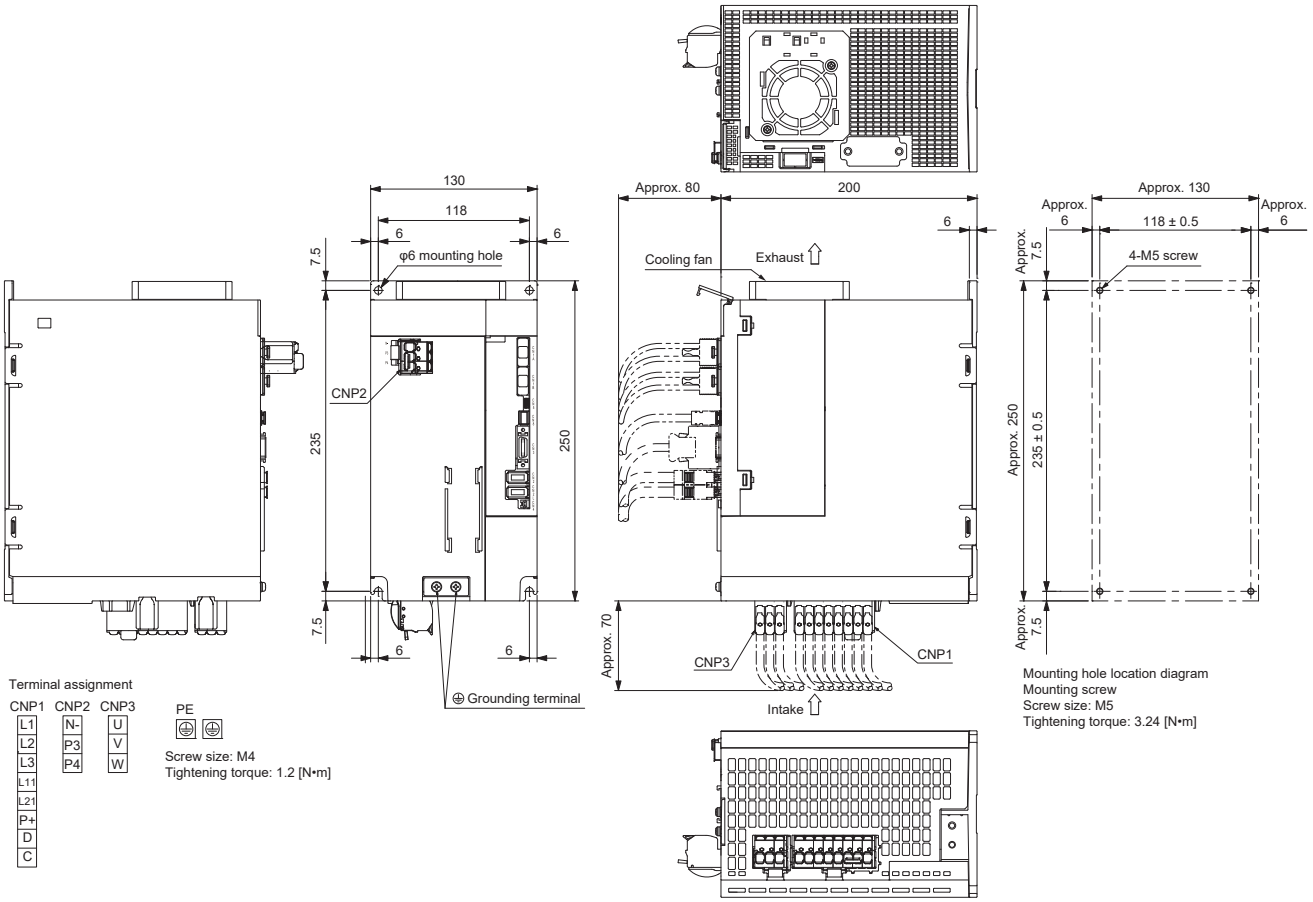

4.4 MR-J5W_-_B_

MR-J5W2-22B_/MR-J5W2-44B_

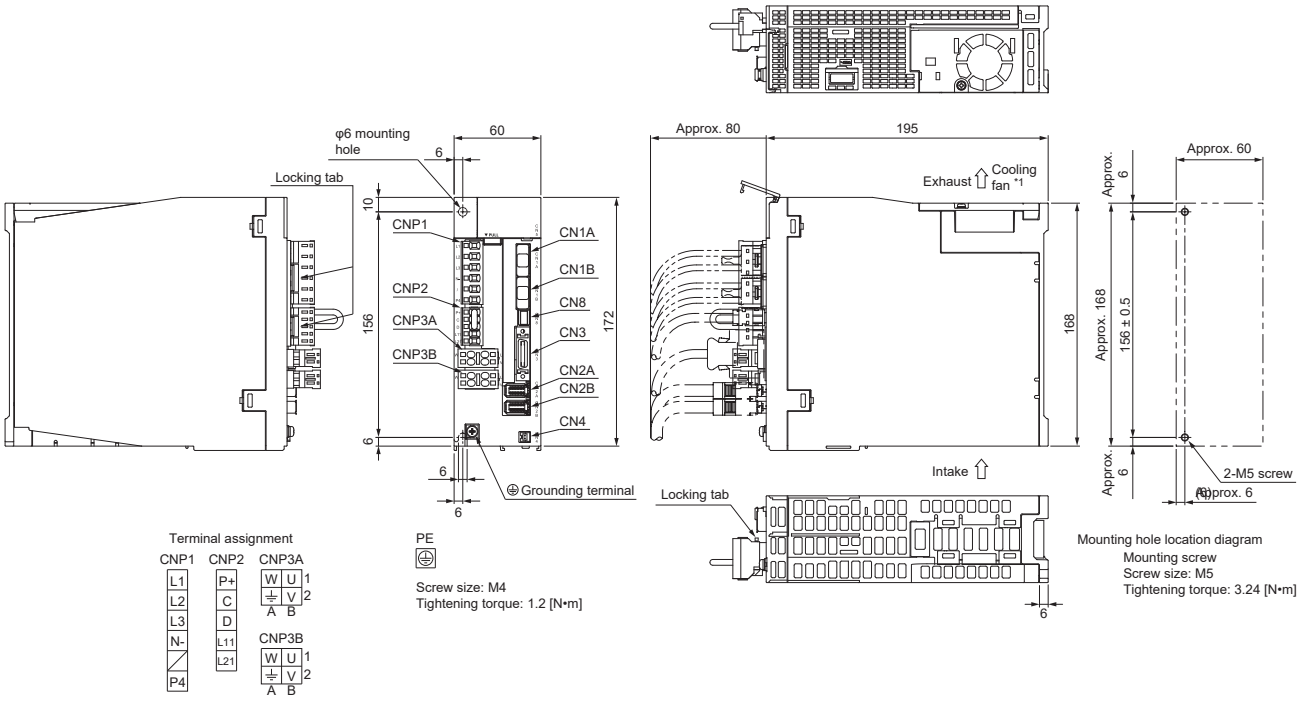

*1 Only the MR-J5W2-44B_ servo amplifiers have a cooling fan.

MR-J5W2-77B_/MR-J5W2-1010B_

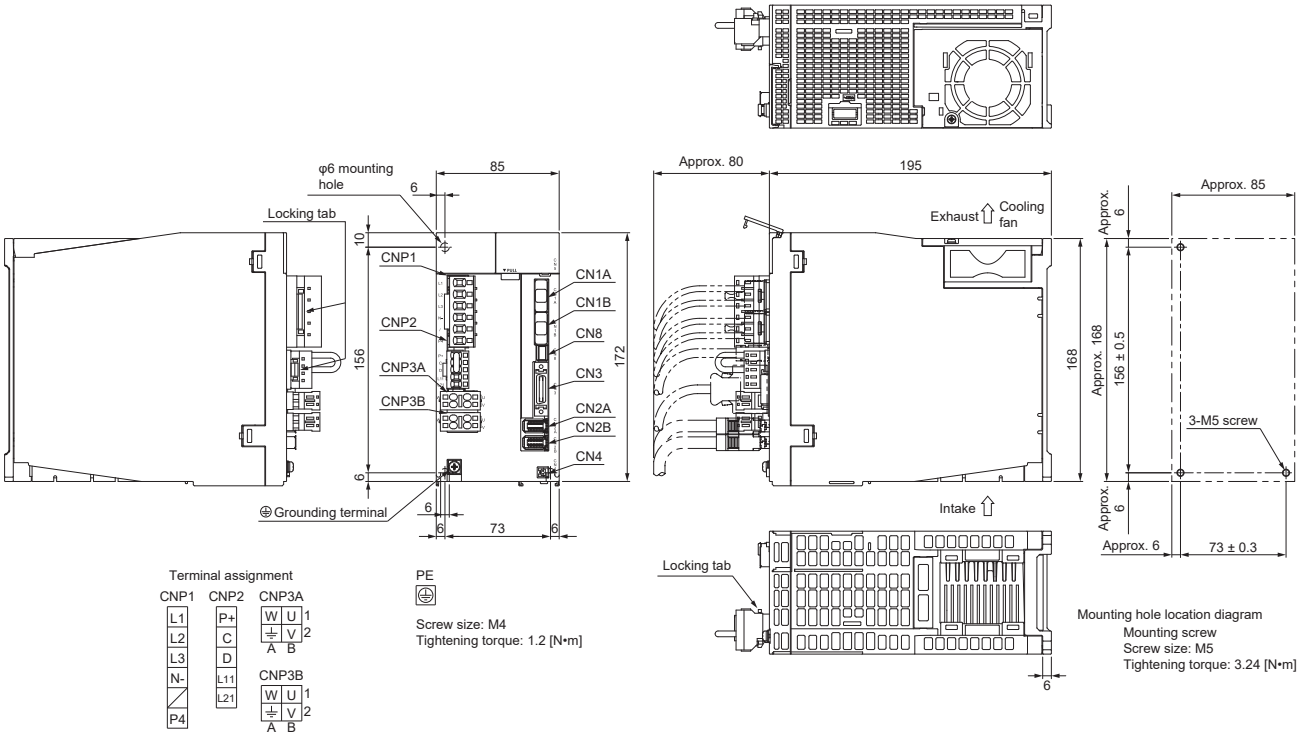

MR-J5W3-222B_/MR-J5W3-444B_

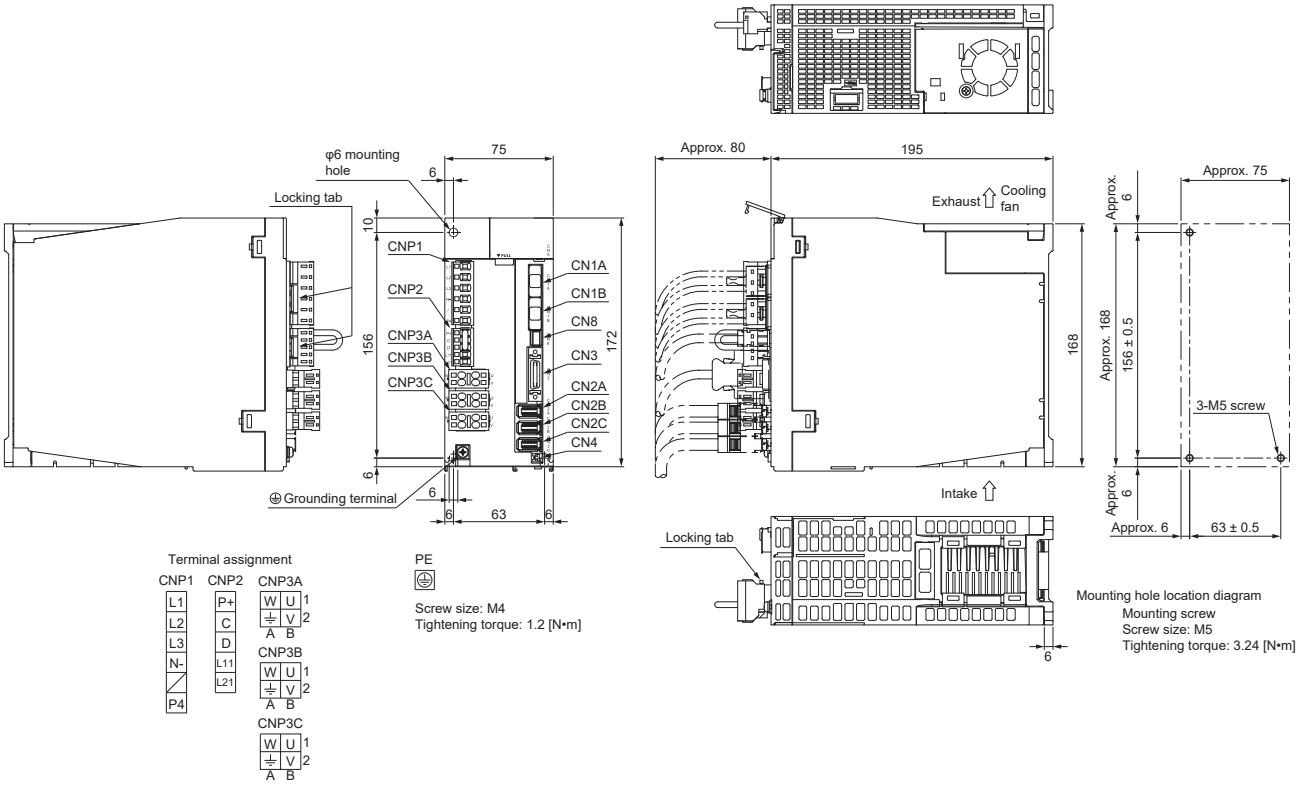

4.5 MR-J5-_A_

Point

The following are examples of the MR-J5-_A_-RJ servo amplifiers.

200 V class

MR-J5-10A_/MR-J5-20A_/MR-J5-40A_

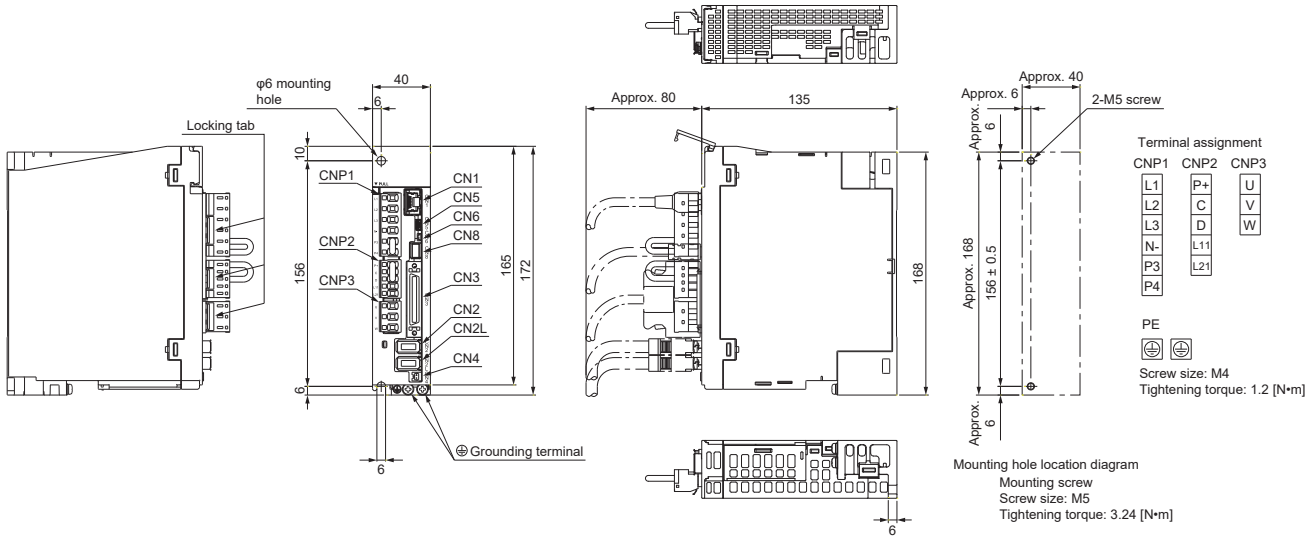

MR-J5-60A_

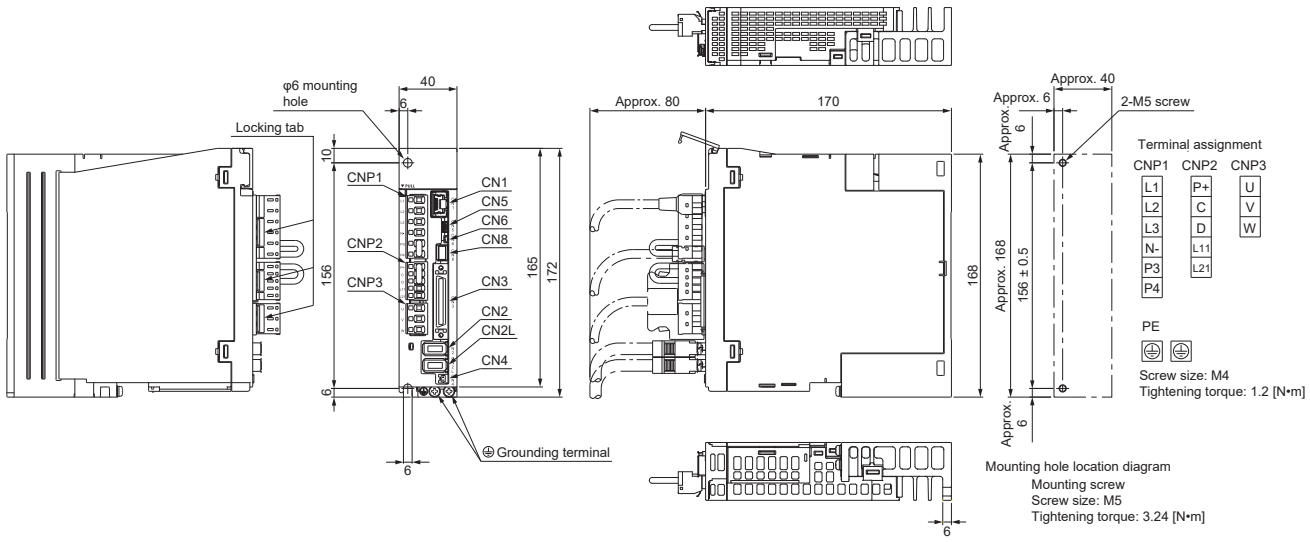

MR-J5-70A_/MR-J5-100A_

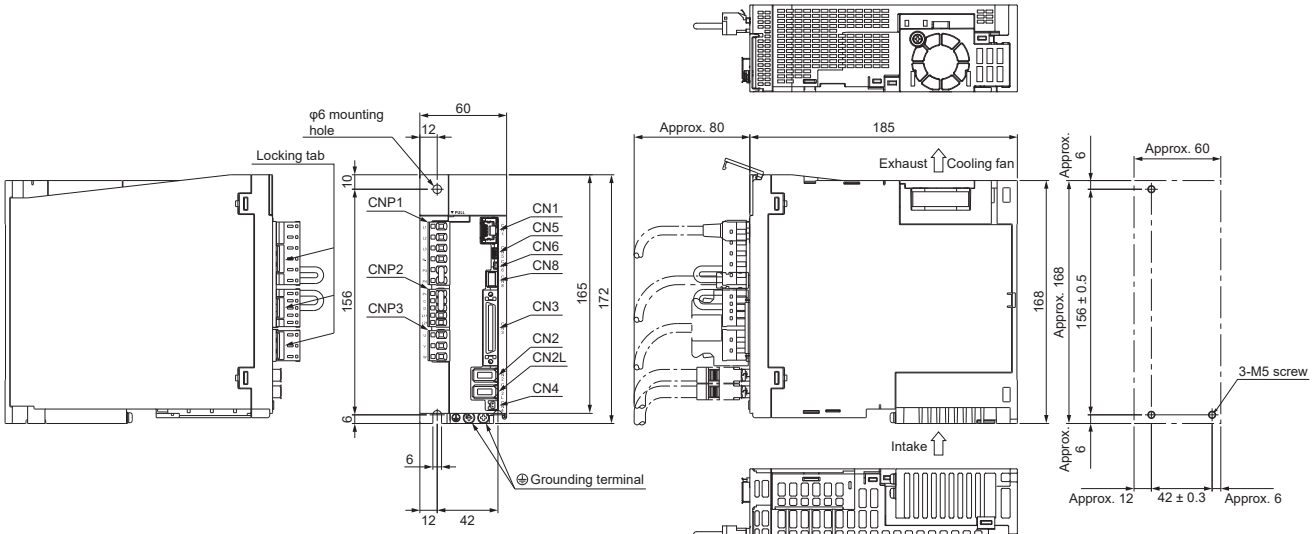

Terminal assignment

CNP1	CNP2	CNP3
L1	P+	U
L2	C	V
L3	D	W
N-	L11	
P3	L21	
P4		

PE

Screw size: M4
Tightening torque: 1.2 [N•m]

Mounting hole location diagram
Mounting screw
Screw size: M5
Tightening torque: 3.24 [N•m]

MR-J5-200A_/MR-J5-350A_

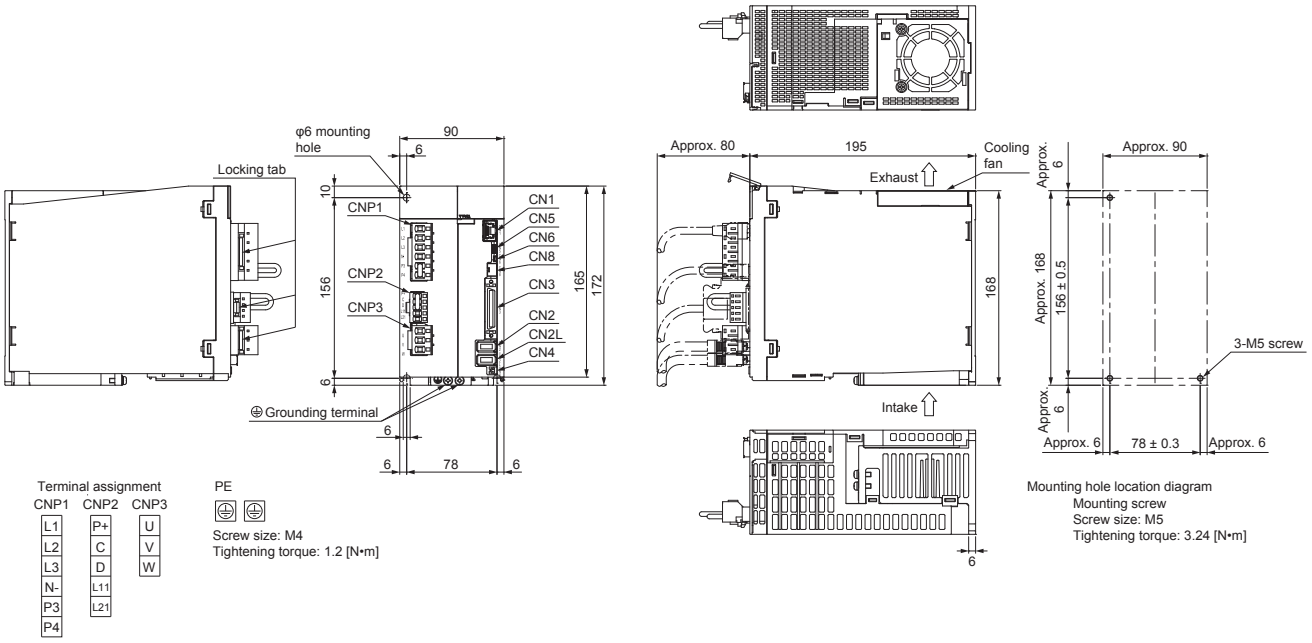

Terminal assignment

CNP1	CNP2	CNP3
L1	P+	U
L2	C	V
L3	D	W
N-	L11	
P3	L21	
P4		

PE

Screw size: M4
Tightening torque: 1.2 [N•m]

Mounting hole location diagram
Mounting screw
Screw size: M5
Tightening torque: 3.24 [N•m]

MR-J5-500A_

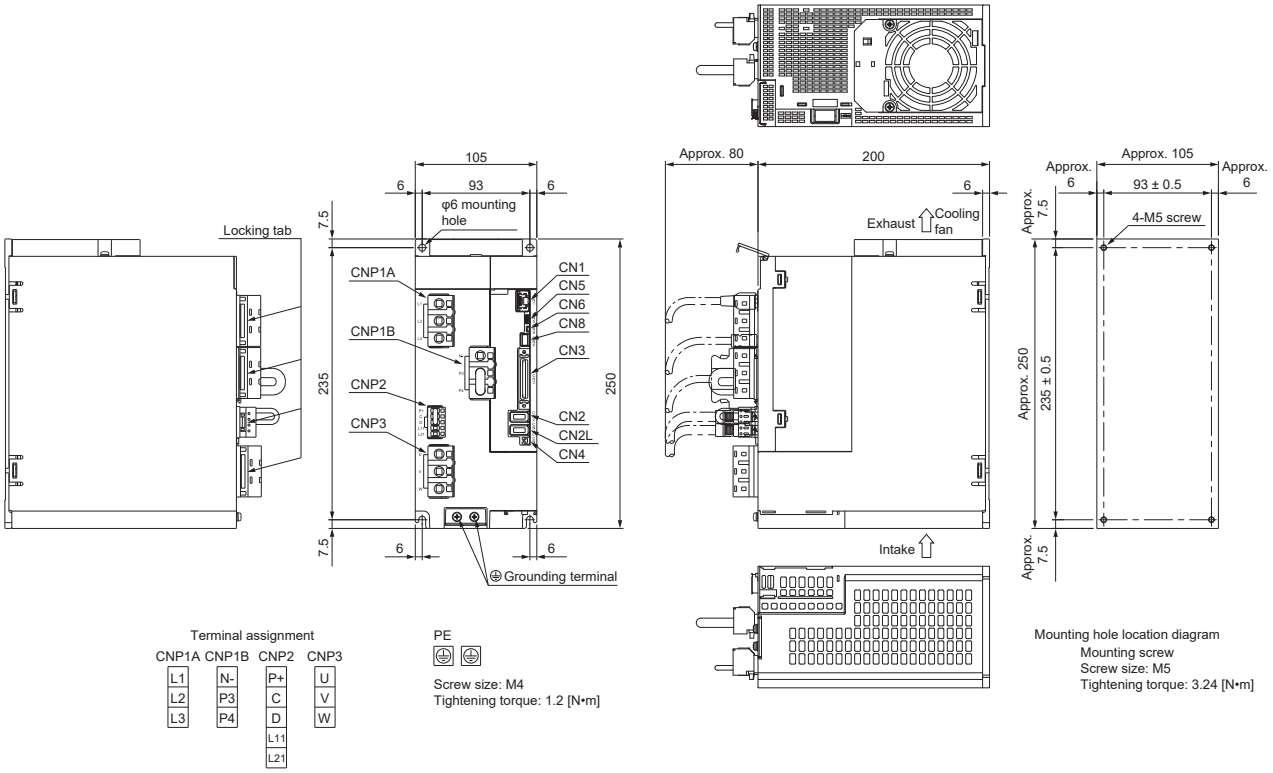

Terminal assignment

CNP1A	CNP1B	CNP2	CNP3
L1	N-	P+	U
L2	P3	C	V
L3	P4	D	W
		L11	
		L21	

PE

Screw size: M4
Tightening torque: 1.2 [N•m]

Mounting hole location diagram
Mounting screw
Screw size: M5
Tightening torque: 3.24 [N•m]

MR-J5-700A_

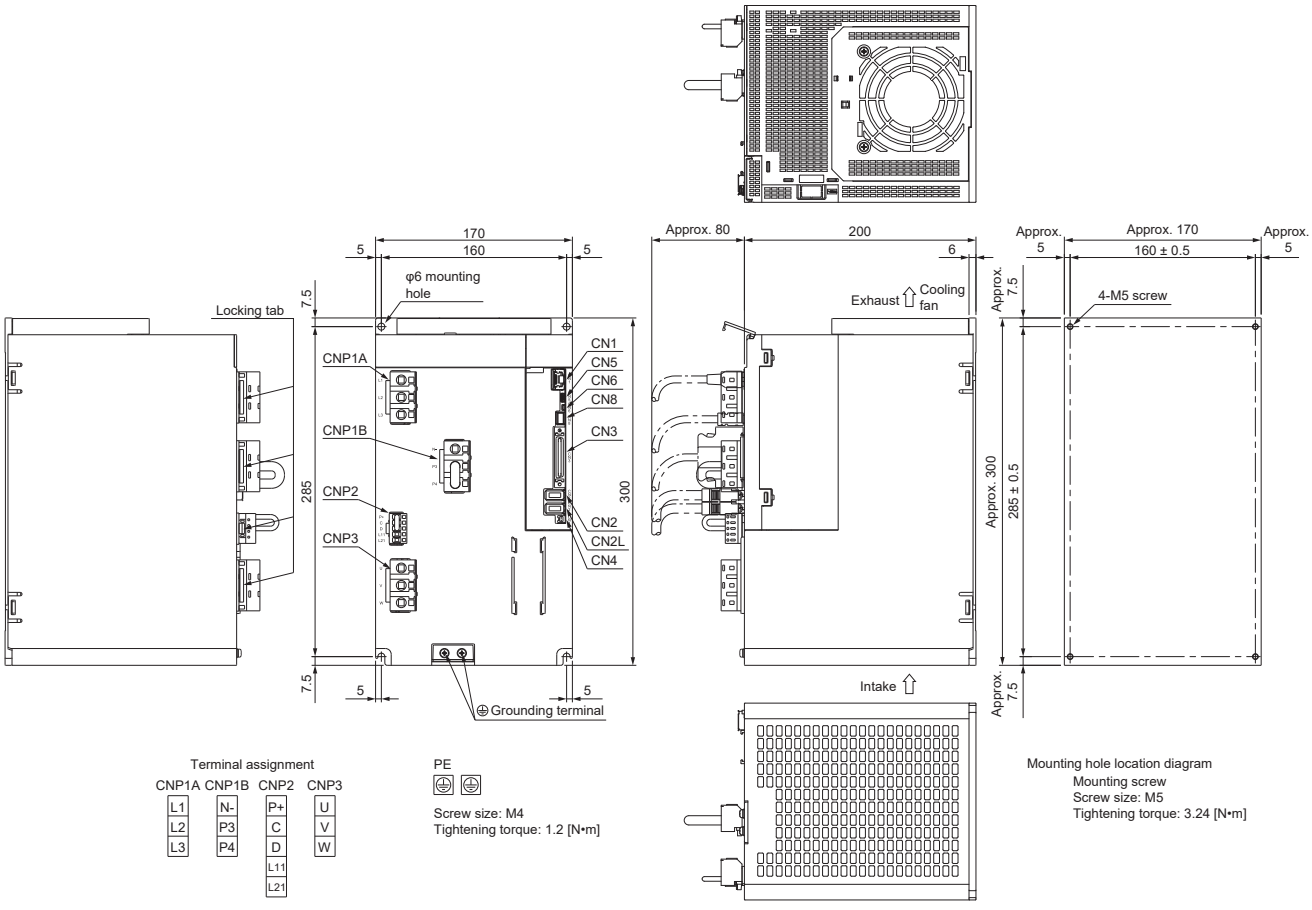

Terminal assignment

CNP1A	CNP1B	CNP2	CNP3
L1	N-	P+	U
L2	P3	C	V
L3	P4	D	W
		L11	
		L21	

PE

Screw size: M4
Tightening torque: 1.2 [N•m]

Mounting hole location diagram
Mounting screw
Screw size: M5
Tightening torque: 3.24 [N•m]

400 V class

MR-J5-60A4_/MR-J5-100A4_

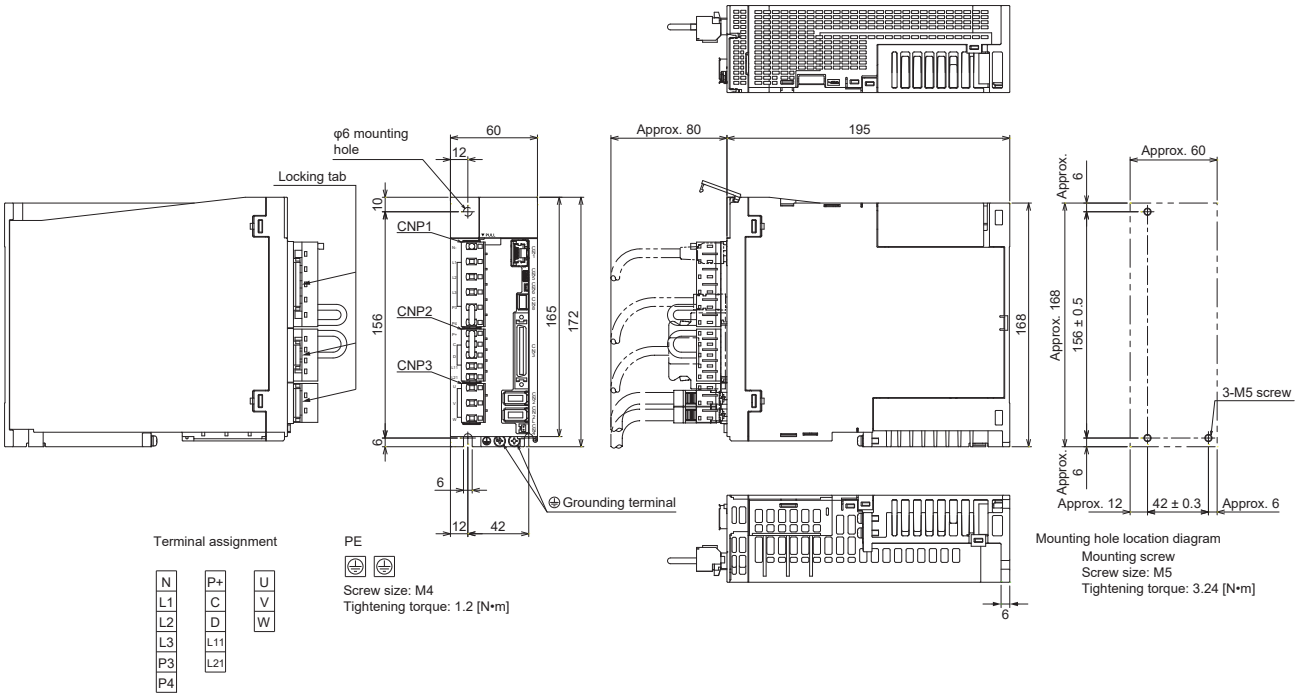

MR-J5-200A4_/MR-J5-350A4_

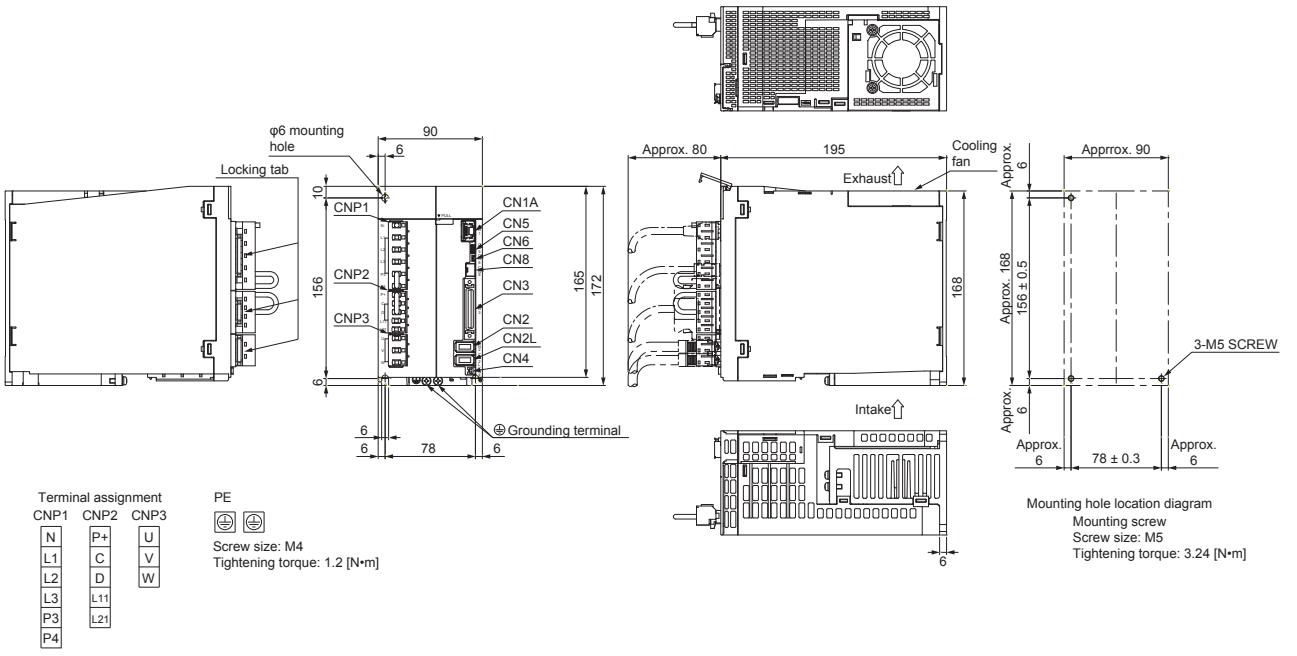

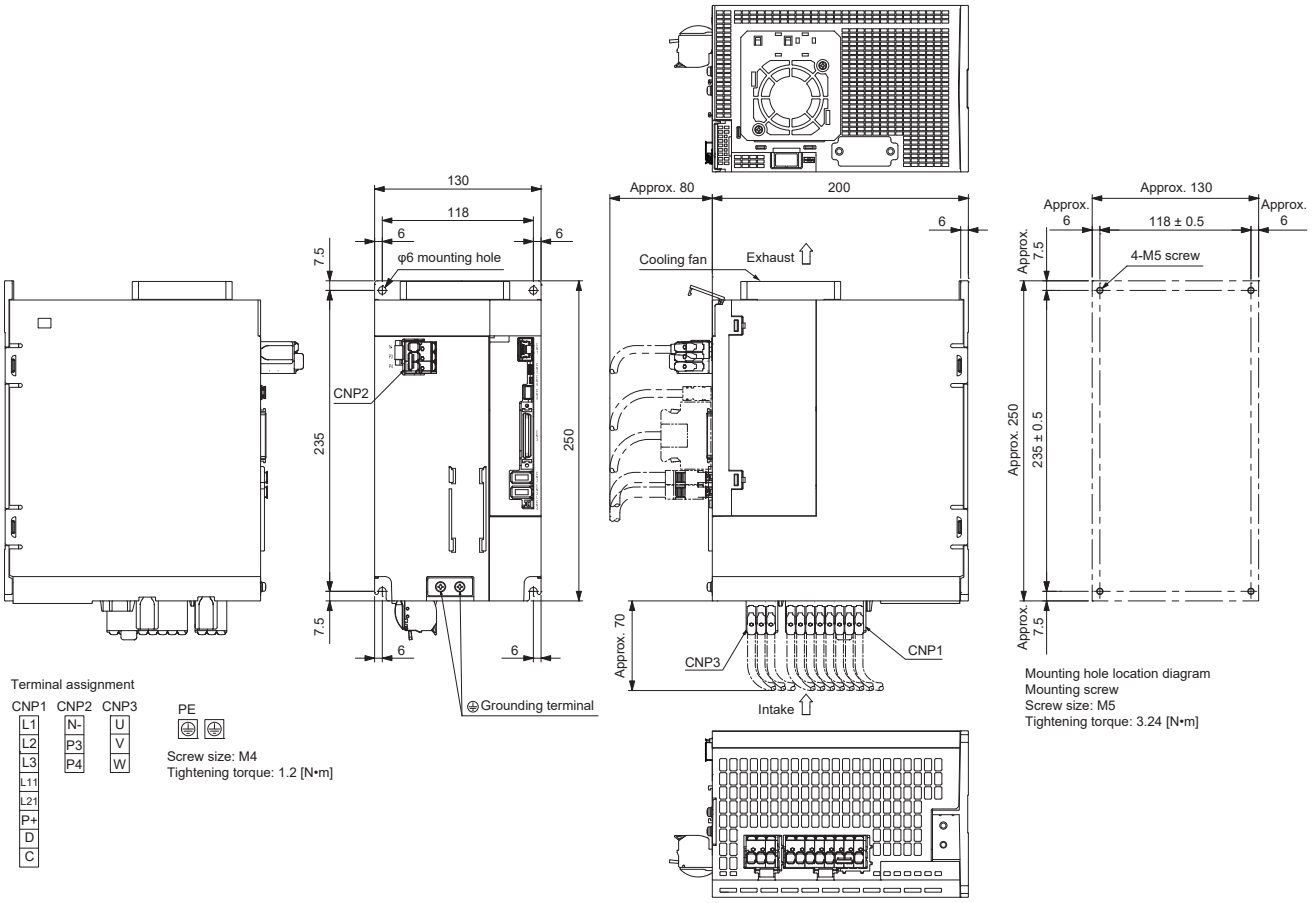
130
118
6
6
φ6 mounting hole
7.5
CNP2
235
250
7.5
6
6
Grounding terminal
Approx. 80
200
6
Cooling fan
Exhaust
Approx. 70
CNP3
CNP1
Intake
Approx. 130
Approx.
6
118 ± 0.5
Approx.
6
Approx.
7.5
4-M5 screw
Approx. 250
235 ± 0.5
Approx.
7.5
Terminal assignment
CNP1
L1
L2
L3
L11
L21
P+
D
C
CNP2
N-
P3
P4
CNP3
U
V
W
PE
Screw size: M4
Tightening torque: 1.2 [N•m]
Mounting hole location diagram
Mounting screw
Screw size: M5
Tightening torque: 3.24 [N•m]

4.6 Connector

Precautions

- Obtain the wiring instructions from the manufacturer, and wire the connectors appropriately.

MR-J5_-_G_

CN2 connector

■SCR connector system (3M)

Receptacle: 36210-0100PL

Shell kit: 36310-3200-008

[Unit: mm]

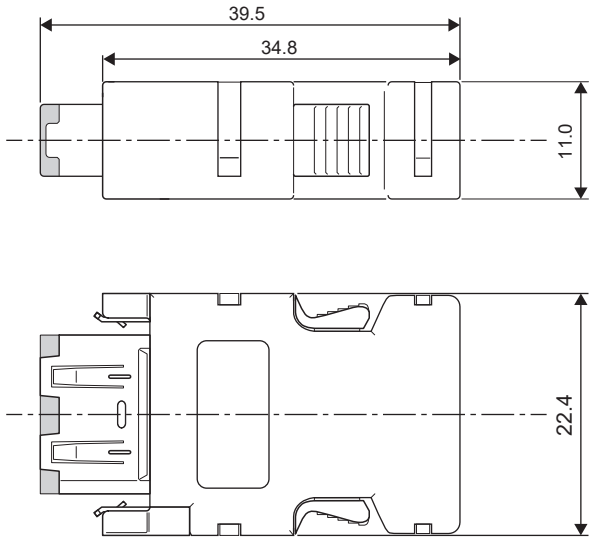

CN3 connector (1-axis servo amplifier)

■Miniature delta ribbon (MDR) system (3M)

• One-touch lock type

[Unit: mm]

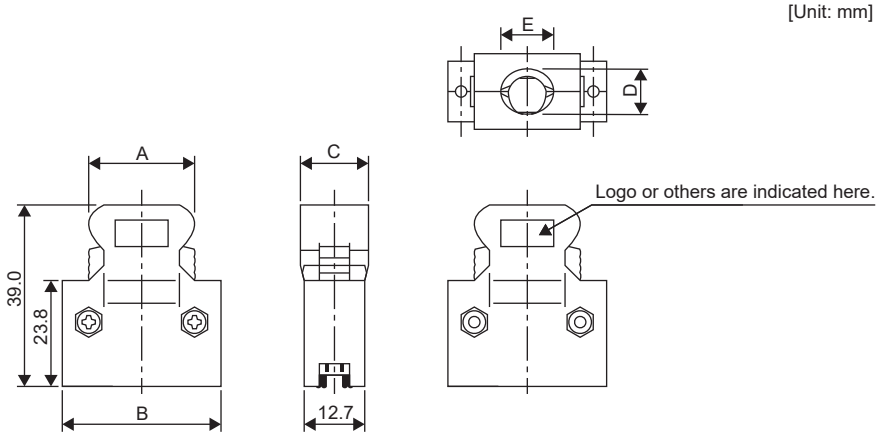

Connector	Shell kit	Variable dimensions				
		A	B	C	D	E
10120-3000PE	10320-52F0-008	22.0	33.3	14.0	10.0	12.0

• Jack screw M2.6 type

This connector is not available as an option.

[Unit: mm]

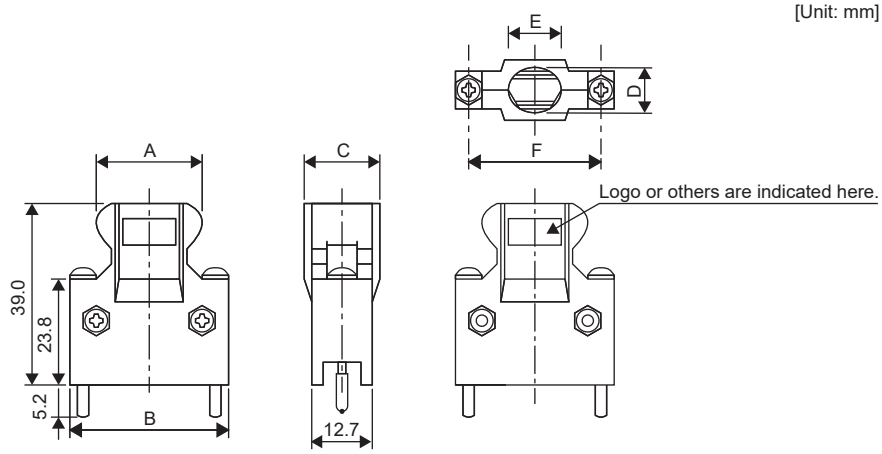

Connector	Shell kit	Variable dimensions					
		A	B	C	D	E	F
10120-3000PE	10320-52A0-008	22.0	33.3	14.0	10.0	12.0	27.4

CN3 connector (multi-axis servo amplifier)

■Miniature delta ribbon (MDR) system (3M)

• One-touch lock type

[Unit: mm]

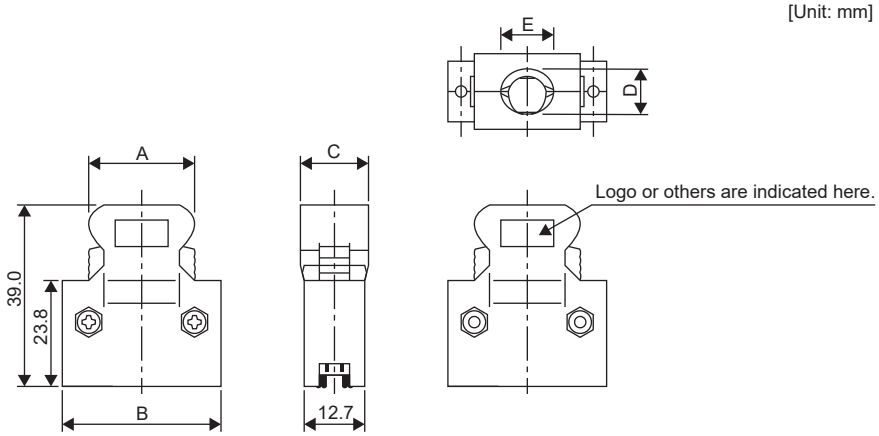

Connector	Shell kit	Variable dimensions				
		A	B	C	D	E
10126-3000PE	10326-52F0-008	25.8	37.2	14.0	10.0	12.0

• Jack screw M2.6 type

This connector is not available as an option.

[Unit: mm]

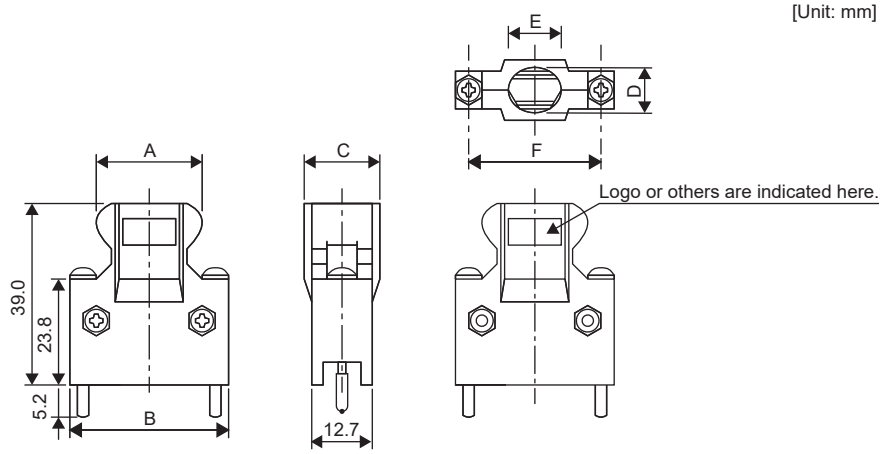

Connector	Shell kit	Variable dimensions					
		A	B	C	D	E	F
10126-3000PE	10326-52A0-008	25.8	37.2	14.0	10.0	12.0	31.3

CN7 connector (MR-J5-_G_-HS_)

■IX series connector (Hirose Electric)

- Right angle, bottom connection type

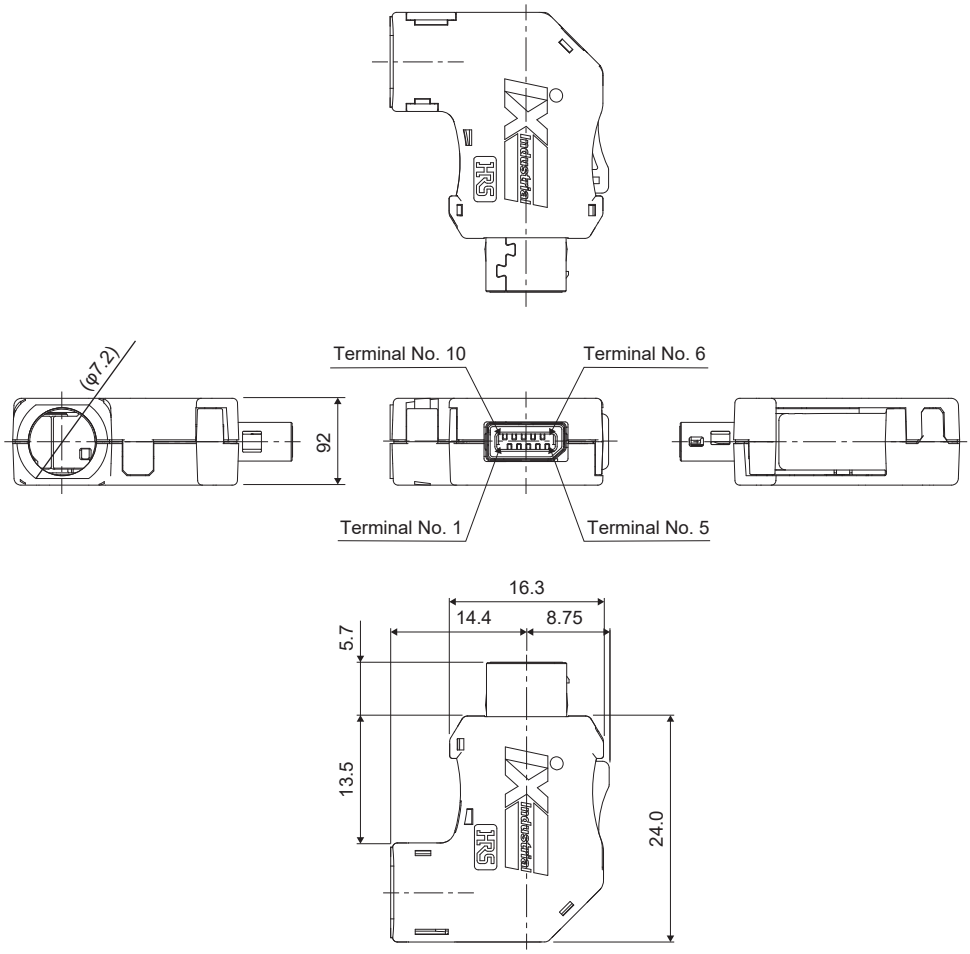

Connector
IX30G-B-10S-CVL1(7.0)

CN1_ connector

• F0-PF2D103

[Unit: mm]

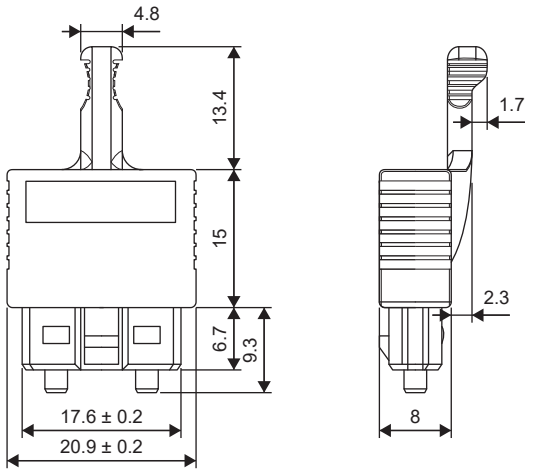

• F0-CF2D103-S

[Unit: mm]

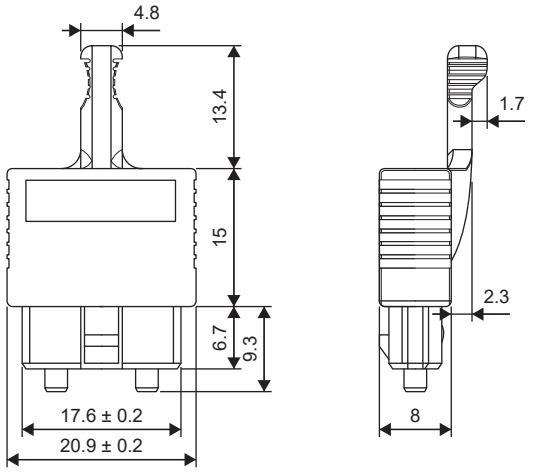

CN2_ connector

☞ Page 164 CN2 connector

CN3 connector (1-axis servo amplifier)

☞ Page 165 CN3 connector (1-axis servo amplifier)

CN3 connector (multi-axis servo amplifier)

☞ Page 166 CN3 connector (multi-axis servo amplifier)

CN2 connector

☞ Page 164 CN2 connector

CN3 connector

■Miniature delta ribbon (MDR) system (3M)

• One-touch lock type

[Unit: mm]

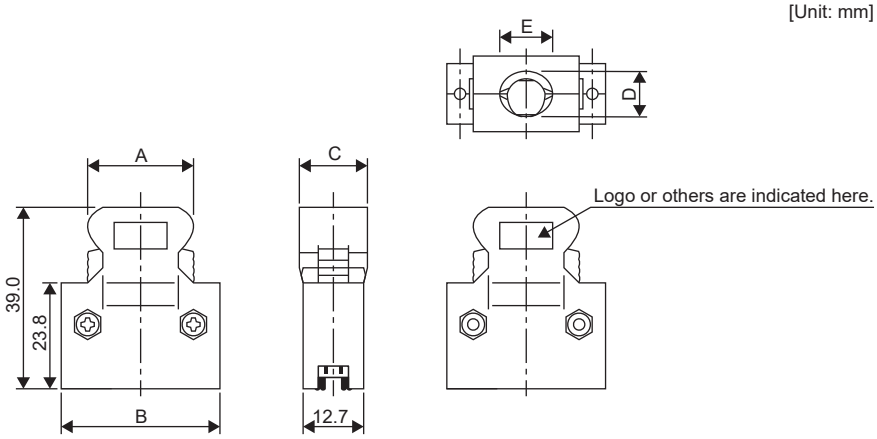

Connector	Shell kit	Variable dimensions				
		A	B	C	D	E
10150-3000PE	10350-52F0-008	41.1	52.4	18.0	14.0	17.0

• Jack screw M2.6 type

This connector is not available as an option.

[Unit: mm]

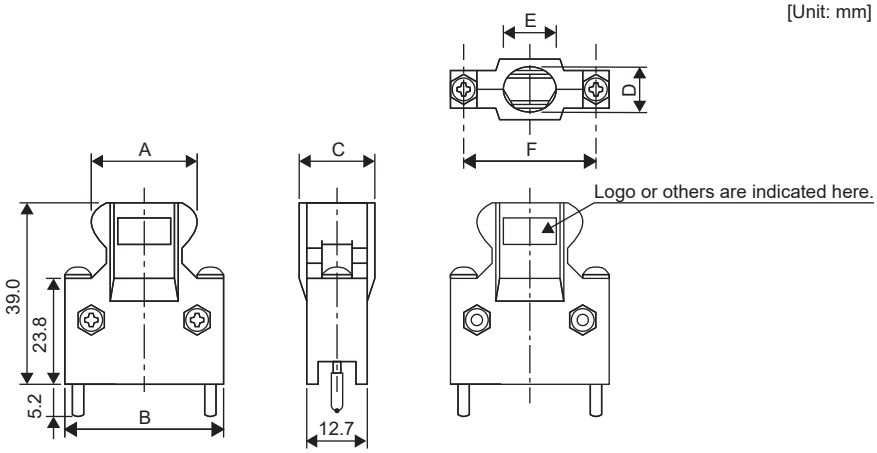

Connector	Shell kit	Variable dimensions					
		A	B	C	D	E	F
10150-3000PE	10350-52A0-008	41.1	52.4	18.0	14.0	17.0	46.5

5 CHARACTERISTICS

For the characteristics of the linear servo motor and the direct drive motor, refer to the following.

☞ Page 540 Characteristics
☞ Page 577 Characteristics

5.1 Overload protection characteristics

Precautions

Servo amplifiers running firmware version A7 or later have improved overload protection for rotary servo motors. Overload protection is triggered in a shorter period of time compared to servo amplifiers running version A6 or earlier, so depending on the operation pattern, overload warnings and alarms will easily occur. To prevent warnings or alarms from easily occurring, try extending acceleration/deceleration times or revising the operation pattern. If any problems are caused by the changes made to the characteristics of overload protection, contact your local sales representative.

Outline

An electronic thermal protection is built in the servo amplifier to protect the servo motor, servo amplifier, and servo motor power wires from overloads. In this section, overload protection characteristics refer to the overload protection characteristics of servo amplifiers and servo motors.

Operation exceeding the overload protection characteristics described in this section will cause [AL. 050 Overload 1] or [AL. 051 Overload 2]. Use the equipment within the overload protection level indicated on the left side of the continuous or dotted lines in the following graphs.

For machines where unbalanced torque occurs, such as a vertical axis system, the unbalanced torque should be kept at 70 % or lower of the rated torque.

This servo amplifier has a servo motor overload protection function. (The servo motor overload current is set on the basis of 120 % of the rated current (full load current).)

The servo amplifier may malfunction regardless of the electronic thermal protection if torque exceeding 100 % of the rated torque is generated too frequently while the servo motor is stopped (servo-lock status) or being operated at low speeds of 50 r/min or less.

Graph of overload protection characteristics

The following table lists servo motors and corresponding graphs of overload protection characteristics. The overload protection characteristics depend on the servo motor.

Rotary servo motor				Graph of overload protection characteristics
HK-KT	HK-MT	HK-ST	HK-RT	
053W 13W 13UW	053W 13W 053VW 13VW	7M2UW	—	☞ Page 172 Characteristic a
1M3W 23W 43W 63W 7M3W 103W 153W 203W 202W 434W 634W 7M34W 1034W 1534W 2034W 2024W 23UW 43UW 63UW 7M3UW 103UW 634UW 1034UW	1M3W 23W 43W 63W 7M3W 103W 1M3VW 23VW 43VW 63VW 7M3VW 103VW	52W 102W 172W 302W 172UW 202W 352W 353W 524W 1024W 1724W 3024W 2024W 3524W 3534W 5024W 202AW 2024AW	103W 153W 203W 353W 1034W 1534W 2034W 3534W	☞ Page 172 Characteristic b
—	—	502W 503W 702W 5024W 5034W 7024W	503W 703W 5034W 7034W	☞ Page 172 Characteristic c

5

■Characteristic a

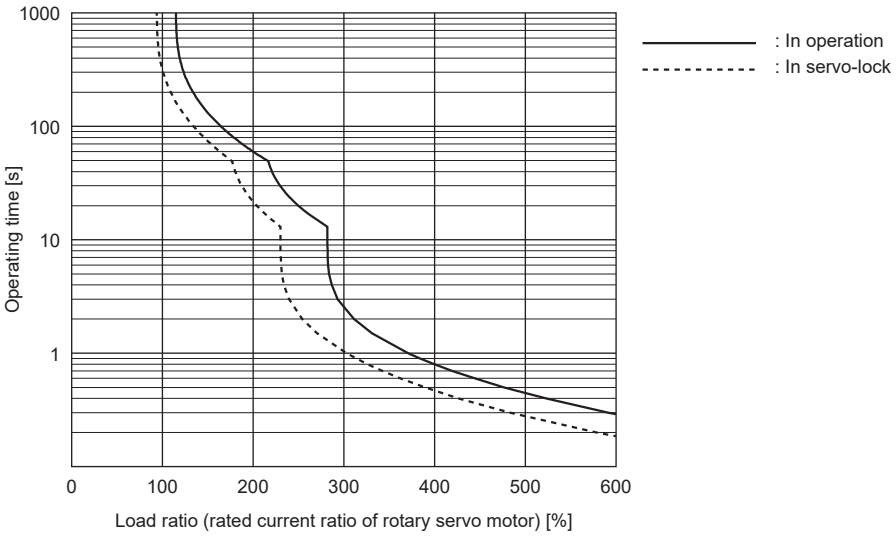

■Characteristic b

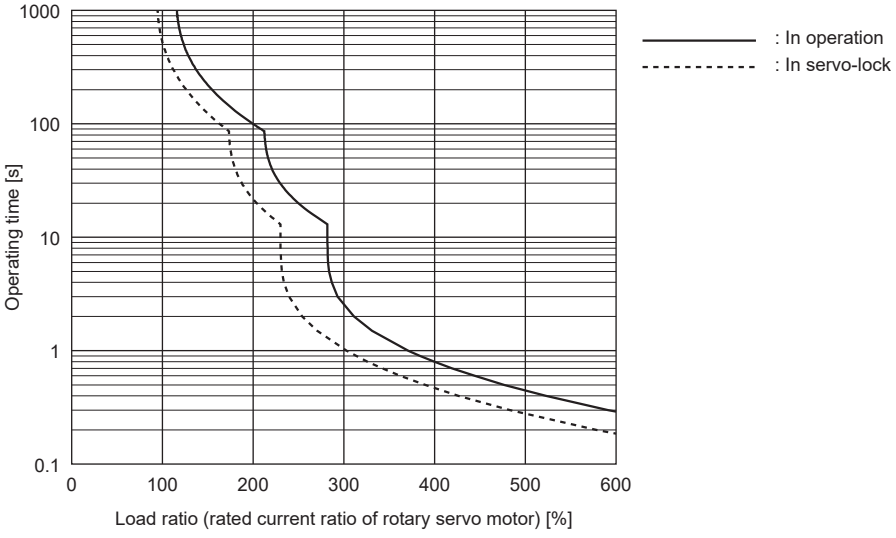

■Characteristic c

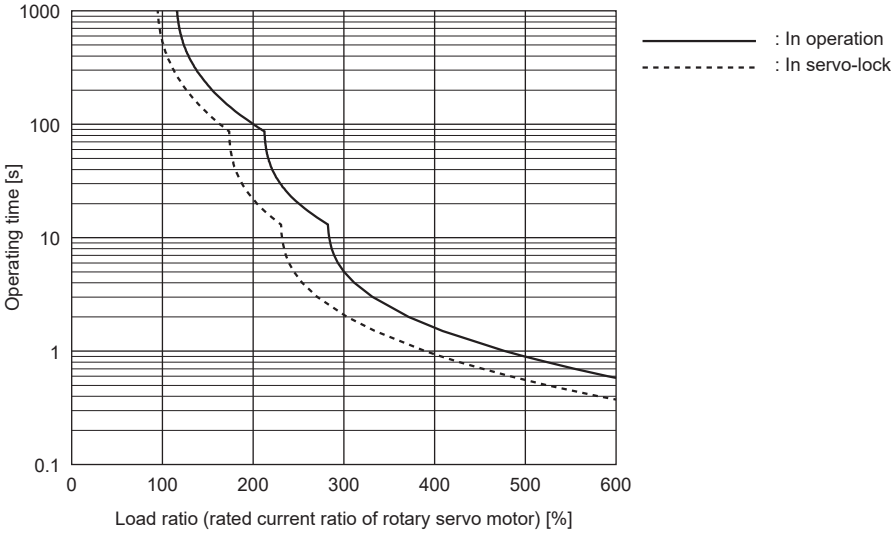

5.2 Power supply capacity and generated loss

Power supply capacity

The following table indicates power supply capacities of servo amplifiers.
When the servo motor runs at less than the rated speed, the power supply capacity is smaller than the value in the table.

200 V class

■1-axis servo amplifier

Rotary servo motor		Servo amplifier	Power supply capacity [kVA] *1
HK-KT series	HK-KT053W	MR-J5-10_	0.3
		MR-J5-20_	0.3
		MR-J5-40_	0.3
	HK-KT13W	MR-J5-10_	0.3
		MR-J5-20_	0.3
		MR-J5-40_	0.3
	HK-KT1M3W	MR-J5-20_	0.5
		MR-J5-40_	0.5
		MR-J5-60_	0.5
	HK-KT13UW	MR-J5-10_	0.3
		MR-J5-20_	0.3
		MR-J5-40_	0.3
	HK-KT23W	MR-J5-20_	0.5
		MR-J5-40_	0.5
		MR-J5-60_	0.5
	HK-KT43W	MR-J5-40_	0.9
		MR-J5-60_	0.9
		MR-J5-70_	0.9
	HK-KT63W	MR-J5-70_	1.3
		MR-J5-100_	1.3
		MR-J5-200_	1.3
	HK-KT23UW	MR-J5-20_	0.5
		MR-J5-40_	0.5
		MR-J5-60_	0.5
	HK-KT43UW	MR-J5-40_	0.8
		MR-J5-60_	0.8
		MR-J5-70_	0.8
	HK-KT7M3W	MR-J5-70_	1.3
		MR-J5-100_	1.3
		MR-J5-200_	1.3
	HK-KT103W	MR-J5-100_	1.9
		MR-J5-200_	1.9
		MR-J5-350_	2.0
	HK-KT7M3UW	MR-J5-70_	1.3
		MR-J5-100_	1.3
		MR-J5-200_	1.3
	HK-KT103UW	MR-J5-100_	1.8
		MR-J5-200_	1.8
		MR-J5-350_	1.8
	HK-KT153W	MR-J5-200_	2.6
		MR-J5-350_	2.8

Rotary servo motor		Servo amplifier	Power supply capacity [kVA] *1
HK-KT series	HK-KT203W	MR-J5-200_	3.2
		MR-J5-350_	3.6
	HK-KT202W	MR-J5-200_	3.3
		MR-J5-350_	3.6
	HK-KT63UW	MR-J5-60_	1.3
		MR-J5-70_	1.3
		MR-J5-100_	1.1
	HK-KT434W	MR-J5-20_	0.6
		MR-J5-40_	0.6
		MR-J5-60_	0.6
	HK-KT634W	MR-J5-40_	0.8
		MR-J5-60_	0.8
		MR-J5-70_	0.8
	HK-KT7M34W	MR-J5-40_	0.9
		MR-J5-60_	0.9
		MR-J5-70_	0.9
	HK-KT1034W	MR-J5-60_	1.1
		MR-J5-70_	1.1
		MR-J5-100_	1.1
	HK-KT1534W	MR-J5-70_	1.5
		MR-J5-100_	1.5
		MR-J5-200_	1.5
	HK-KT2034W	MR-J5-100_	1.9
		MR-J5-200_	1.9
		MR-J5-350_	2.0
	HK-KT2024W	MR-J5-100_	1.9
		MR-J5-200_	1.9
		MR-J5-350_	2.1

Rotary servo motor		Servo amplifier	Power supply capacity [kVA] *1
HK-MT series	HK-MT053W	MR-J5-10_	0.3
		MR-J5-20_	0.3
		MR-J5-40_	0.3
	HK-MT053VW	MR-J5-10_	0.3
		MR-J5-20_	0.3
		MR-J5-40_	0.3
	HK-MT13W	MR-J5-10_	0.3
		MR-J5-20_	0.4
		MR-J5-40_	0.4
	HK-MT13VW	MR-J5-10_	0.3
		MR-J5-20_	0.4
		MR-J5-40_	0.4
	HK-MT1M3W	MR-J5-20_	0.5
		MR-J5-40_	0.5
	HK-MT1M3VW	MR-J5-20_	0.5
		MR-J5-40_	0.5
	HK-MT23W	MR-J5-20_	0.5
		MR-J5-40_	0.6
	HK-MT23VW	MR-J5-20_	0.5
		MR-J5-40_	0.6
	HK-MT43W	MR-J5-40_	0.9
		MR-J5-70_	0.9
	HK-MT43VW	MR-J5-60_	0.9
		MR-J5-70_	0.9
	HK-MT63W	MR-J5-70_	1.2
		MR-J5-200_	1.2
	HK-MT63VW	MR-J5-70_	1.2
		MR-J5-200_	1.2
	HK-MT7M3W	MR-J5-70_	1.3
		MR-J5-200_	1.6
	HK-MT7M3VW	MR-J5-70_	1.3
		MR-J5-200_	1.6
	HK-MT103W	MR-J5-100_	1.8
		MR-J5-200_	2.0
	HK-MT103VW	MR-J5-200_	2.0
		MR-J5-350_	2.0

Rotary servo motor		Servo amplifier	Power supply capacity [kVA] *1
HK-ST series	HK-ST52W	MR-J5-60_	1.0
		MR-J5-70_	1.0
		MR-J5-100_	1.0
	HK-ST102W	MR-J5-100_	1.7
		MR-J5-200_	1.7
		MR-J5-350_	1.8
	HK-ST172W *2	MR-J5-200_	3.0
		MR-J5-350_	3.2
	HK-ST202AW	MR-J5-200_	3.5
		MR-J5-350_	3.5
	HK-ST302W	MR-J5-350_	4.9
		MR-J5-500_	4.9
	HK-ST7M2UW	MR-J5-70_	1.3
		MR-J5-100_	1.3
		MR-J5-200_	1.3
	HK-ST172UW	MR-J5-200_	3.0
		MR-J5-350_	3.2
	HK-ST202W	MR-J5-200_	3.5
		MR-J5-350_	3.5
	HK-ST352W	MR-J5-350_	5.5
		MR-J5-500_	5.5
	HK-ST502W	MR-J5-500_	7.5
		MR-J5-700_	7.8
	HK-ST702W	MR-J5-700_	10
	HK-ST353W	MR-J5-350_	5.5
		MR-J5-500_	7.4
	HK-ST503W	MR-J5-500_	7.5
		MR-J5-700_	10
	HK-ST524W	MR-J5-40_	0.7
		MR-J5-60_	0.7
		MR-J5-70_	0.7
	HK-ST1024W	MR-J5-60_	1.3
		MR-J5-70_	1.3
		MR-J5-100_	1.3
	HK-ST1724W	MR-J5-100_	1.7
		MR-J5-200_	1.7
		MR-J5-350_	1.8
	HK-ST2024AW	MR-J5-100_	1.9
		MR-J5-200_	1.9
		MR-J5-350_	2.0
	HK-ST3024W	MR-J5-200_	2.6
		MR-J5-350_	2.8
	HK-ST2024W	MR-J5-200_	2.1
		MR-J5-350_	2.2
	HK-ST3524W	MR-J5-200_	3.2
		MR-J5-350_	3.5
	HK-ST5024W	MR-J5-350_	4.9
		MR-J5-500_	5.0
	HK-ST7024W	MR-J5-500_	6.6
		MR-J5-700_	6.9

Rotary servo motor		Servo amplifier	Power supply capacity [kVA] *1
HK-RT series	HK-RT103W	MR-J5-100_	1.7
		MR-J5-200_	1.7
	HK-RT153W	MR-J5-200_	2.5
		MR-J5-500_	3.1
	HK-RT203W	MR-J5-200_	3.5
		MR-J5-350_	3.5
	HK-RT353W	MR-J5-350_	5.5
		MR-J5-500_	6.4
	HK-RT503W	MR-J5-500_	7.5
		MR-J5-700_	8.8
	HK-RT703W	MR-J5-700_	13.3

*1 The power supply capacity will vary according to the power impedance.

*2 The power supply capacity of the HK-ST152G_ is 2.5 kVA.

■Multi-axis servo amplifiers

The values in the table are the required power supply capacities per servo motor. Calculate the power supply capacity of a multi-axis servo amplifier with the following formula.

Power supply capacity [kVA] = Sum of power supply capacities [kVA] of the connected servo motors

Rotary servo motor		Servo amplifier	Power supply capacity [kVA] *1
HK-KT series	HK-KT053W	MR-J5W2-22_	0.3
		MR-J5W2-44_	0.3
		MR-J5W3-222_	0.3
		MR-J5W3-444_	0.3
	HK-KT13W	MR-J5W2-22_	0.3
		MR-J5W2-44_	0.3
		MR-J5W3-222_	0.3
		MR-J5W3-444_	0.3
	HK-KT1M3W	MR-J5W2-22_	0.5
		MR-J5W2-44_	0.5
		MR-J5W3-222_	0.5
		MR-J5W3-444_	0.5
	HK-KT13UW	MR-J5W2-22_	0.3
		MR-J5W2-44_	0.3
		MR-J5W3-222_	0.3
		MR-J5W3-444_	0.3
	HK-KT23W	MR-J5W2-22_	0.5
		MR-J5W2-44_	0.5
		MR-J5W3-222_	0.5
		MR-J5W3-444_	0.5
	HK-KT43W	MR-J5W2-44_	0.9
		MR-J5W2-77_	0.9
		MR-J5W2-1010_	0.9
		MR-J5W3-444_	0.9
	HK-KT63W	MR-J5W2-77_	1.3
		MR-J5W2-1010_	1.3
	HK-KT23UW	MR-J5W2-22_	0.5
		MR-J5W2-44_	0.5
		MR-J5W3-222_	0.5
		MR-J5W3-444_	0.5
	HK-KT43UW	MR-J5W2-44_	0.8
		MR-J5W2-77_	0.8
		MR-J5W2-1010_	0.8
		MR-J5W3-444_	0.8
	HK-KT7M3W	MR-J5W2-77_	1.3
		MR-J5W2-1010_	1.3
	HK-KT103W	MR-J5W2-1010_	1.9
	HK-KT7M3UW	MR-J5W2-77_	1.3
		MR-J5W2-1010_	1.3
	HK-KT103UW	MR-J5W2-1010_	1.3
	HK-KT63UW	MR-J5W2-77_	1.3
		MR-J5W2-1010_	1.3

Rotary servo motor		Servo amplifier	Power supply capacity [kVA] *1
HK-KT series	HK-KT434W	MR-J5W2-22_	0.6
		MR-J5W2-44_	0.6
		MR-J5W3-222_	0.6
		MR-J5W3-444_	0.6
	HK-KT634W	MR-J5W2-44_	0.8
		MR-J5W2-77_	0.8
		MR-J5W2-1010_	0.8
		MR-J5W3-444_	0.8
	HK-KT7M34W	MR-J5W2-44_	0.9
		MR-J5W2-77_	0.9
		MR-J5W2-1010_	0.9
		MR-J5W3-444_	0.9
	HK-KT1034W	MR-J5W2-77_	1.1
		MR-J5W2-1010_	1.1
	HK-KT1534W	MR-J5W2-77_	1.5
		MR-J5W2-1010_	1.5
	HK-KT2034W	MR-J5W2-1010_	1.9
	HK-KT2024W	MR-J5W2-1010_	1.9

Rotary servo motor		Servo amplifier	Power supply capacity [kVA] *1
HK-MT series	HK-MT053W	MR-J5W2-22_	0.3
		MR-J5W2-44_	0.3
		MR-J5W3-222_	0.3
		MR-J5W3-444_	0.3
	HK-MT053VW	MR-J5W2-22_	0.3
		MR-J5W2-44_	0.3
		MR-J5W3-222_	0.3
		MR-J5W3-444_	0.3
	HK-MT13W	MR-J5W2-22_	0.4
		MR-J5W2-44_	0.4
		MR-J5W3-222_	0.4
		MR-J5W3-444_	0.4
	HK-MT13VW	MR-J5W2-22_	0.4
		MR-J5W2-44_	0.4
		MR-J5W3-222_	0.4
		MR-J5W3-444_	0.4
	HK-MT1M3W	MR-J5W2-22_	0.5
		MR-J5W2-44_	0.5
		MR-J5W3-222_	0.5
		MR-J5W3-444_	0.5
	HK-MT1M3VW	MR-J5W2-22_	0.5
		MR-J5W2-44_	0.5
		MR-J5W3-222_	0.5
		MR-J5W3-444_	0.5
	HK-MT23W	MR-J5W2-22_	0.5
		MR-J5W2-44_	0.5
		MR-J5W3-222_	0.5
		MR-J5W3-444_	0.5
	HK-MT23VW	MR-J5W2-22_	0.5
		MR-J5W2-44_	0.5
		MR-J5W3-222_	0.5
		MR-J5W3-444_	0.5
	HK-MT43W	MR-J5W2-44_	0.9
		MR-J5W2-77_	0.9
		MR-J5W2-1010_	0.9
		MR-J5W3-444_	0.9
	HK-MT43VW	MR-J5W2-77_	0.9
		MR-J5W2-1010_	0.9
	HK-MT63W	MR-J5W2-77_	1.2
		MR-J5W2-1010_	1.2
	HK-MT63VW	MR-J5W2-77_	1.2
		MR-J5W2-1010_	1.2
	HK-MT7M3W	MR-J5W2-77_	1.3
		MR-J5W2-1010_	1.3
	HK-MT7M3VW	MR-J5W2-77_	1.3
		MR-J5W2-1010_	1.3
	HK-MT103W	MR-J5W2-1010_	1.8

Rotary servo motor		Servo amplifier	Power supply capacity [kVA] *1
HK-ST series	HK-ST52W	MR-J5W2-77_	1.0
		MR-J5W2-1010_	1.0
	HK-ST102W	MR-J5W2-1010_	1.7
	HK-ST7M2UW	MR-J5W2-77_	1.3
		MR-J5W2-1010_	1.3
	HK-ST524W	MR-J5W2-44_	0.7
		MR-J5W2-77_	0.7
		MR-J5W3-444_	0.7
	HK-ST1024W	MR-J5W2-77_	1.3
		MR-J5W2-1010_	1.3
	HK-ST1724W	MR-J5W2-1010_	1.7
	HK-ST2024AW	MR-J5W2-1010_	1.9
HK-RT series	HK-RT103W	MR-J5W2-1010_	1.7

*1 The power supply capacity will vary according to the power impedance.

400 V class

Rotary servo motor		Servo amplifier	Power supply capacity [kVA] *1
HK-KT series	HK-KT053W	MR-J5-60_4_	0.3
		MR-J5-100_4_	0.3
	HK-KT13W	MR-J5-60_4_	0.5
		MR-J5-100_4_	0.4
	HK-KT1M3W	MR-J5-60_4_	0.6
		MR-J5-100_4_	0.6
	HK-KT634UW	MR-J5-60_4_	1.3
		MR-J5-100_4_	1.3
		MR-J5-200_4_	1.5
	HK-KT1034UW	MR-J5-100_4_	1.7
		MR-J5-200_4_	2.3
		MR-J5-350_4_	2.3
	HK-KT434W	MR-J5-60_4_	1.2
		MR-J5-100_4_	1.1
		MR-J5-200_4_	1.1
	HK-KT634W	MR-J5-100_4_	1.5
		MR-J5-200_4_	1.6
		MR-J5-350_4_	1.6
	HK-KT7M34W	MR-J5-100_4_	1.8
		MR-J5-200_4_	1.8
		MR-J5-350_4_	1.7
	HK-KT1034W	MR-J5-100_4_	2.3
		MR-J5-200_4_	2.3
		MR-J5-350_4_	2.3
	HK-KT1534W	MR-J5-200_4_	3.1
		MR-J5-350_4_	3.1
	HK-KT2034W	MR-J5-200_4_	4.0
		MR-J5-350_4_	4.0
	HK-KT2024W	MR-J5-200_4_	4.0
		MR-J5-350_4_	4.0

Rotary servo motor		Servo amplifier	Power supply capacity [kVA] *1
HK-ST series	HK-ST524W	MR-J5-60_4_	1.0
		MR-J5-100_4_	1.0
		MR-J5-200_4_	1.0
	HK-ST1024W	MR-J5-100_4_	1.7
		MR-J5-200_4_	1.7
		MR-J5-350_4_	1.7
	HK-ST1724W *2	MR-J5-200_4_	3.2
		MR-J5-350_4_	3.2
		MR-J5-500_4_	3.2
	HK-ST2024AW	MR-J5-200_4_	3.5
		MR-J5-350_4_	3.5
		MR-J5-500_4_	3.5
	HK-ST2024W	MR-J5-200_4_	3.5
		MR-J5-350_4_	3.5
		MR-J5-500_4_	3.5
	HK-ST3024W	MR-J5-350_4_	4.9
		MR-J5-500_4_	4.9
		MR-J5-700_4_	4.9
	HK-ST3524W	MR-J5-350_4_	5.5
		MR-J5-500_4_	5.5
		MR-J5-700_4_	5.9
	HK-ST3534W	MR-J5-350_4_	5.5
		MR-J5-500_4_	5.5
	HK-ST5024W	MR-J5-500_4_	7.5
		MR-J5-700_4_	7.5
	HK-ST5034W	MR-J5-500_4_	7.5
		MR-J5-700_4_	7.5
	HK-ST7024W	MR-J5-700_4_	10
HK-RT series	HK-RT1034W	MR-J5-100_4_	2.2
		MR-J5-200_4_	2.2
	HK-RT1534W	MR-J5-200_4_	3.1
		MR-J5-500_4_	2.7
	HK-RT2034W	MR-J5-200_4_	3.9
		MR-J5-350_4_	3.9
	HK-RT3534W	MR-J5-350_4_	6.2
		MR-J5-500_4_	5.4
	HK-RT5034W	MR-J5-500_4_	7.3
		MR-J5-700_4_	7.9
	HK-RT7034W	MR-J5-700_4_	10

*1 The power supply capacity will vary according to the power impedance.

*2 The power supply capacity of the HK-ST1524G_ is 2.5 kVA.

Generated loss

Servo amplifier generated heat

The following tables indicate the losses generated by servo amplifiers under rated load. For thermal design of an enclosed type cabinet, use the values in the tables in consideration for the worst operating conditions including environments and operation patterns. The actual amount of generated heat depends on the frequency of operation and will be between the "At rated output" and "At servo-off" values.

■200 V class

• 1-axis servo amplifier

Servo amplifier	Servo amplifier-generated heat [W] *1		Area required for heat dissipation [m^2]
	At rated output	At servo-off	
MR-J5-10_	25	15	0.5
MR-J5-20_	25	15	0.5
MR-J5-40_	35	15	0.7
MR-J5-60_	40	15	0.8
MR-J5-70_	50	15	1.0
MR-J5-100_	50	15	1.0
MR-J5-200_	90	20	1.8
MR-J5-350_	130	20	2.6
MR-J5-500_	195	25	3.9
MR-J5-700_	300	25	6.0

• Multi-axis servo amplifier

Servo amplifier	Servo amplifier-generated heat [W] *1	
	At rated output	At servo-off
MR-J5W2-22_	Connected to one axis: 30 Connected to two axes: 40	20
MR-J5W2-44_	Connected to one axis: 40 Connected to two axes: 60	20
MR-J5W2-77_	Connected to one axis: 55 Connected to two axes: 90	20
MR-J5W2-1010_	Connected to one axis: 55 Connected to two axes: 90	20
MR-J5W3-222_	Connected to one axis: 35 Connected to two axes: 45 Connected to three axes: 55	25
MR-J5W2-444_	Connected to one axis: 45 Connected to two axes: 65 Connected to three axes: 85	25

*1 The values stated for heat generated by the servo amplifier do not take into account the heat generated during regeneration. To calculate heat generated by the regenerative option, refer to the following.
☞ Page 269 Regenerative optionPage 269 Regenerative option

■400 V class

Servo amplifier	Servo amplifier-generated heat [W] *1		Area required for heat dissipation [m^2]
	At rated output	At servo-off	
MR-J5-60_4_	40	18	0.8
MR-J5-100_4_	60	18	1.2
MR-J5-200_4_	90	20	1.8
MR-J5-350_4_	160	20	2.7
MR-J5-500_4_	195	25	3.9
MR-J5-700_4_	300	25	6.0

*1 The values stated for heat generated by the servo amplifier do not take into account the heat generated during regeneration. To calculate heat generated by the regenerative option, refer to the following.
☞ Page 269 Regenerative option

Heat dissipation area for enclosed type cabinet

The enclosed type cabinet (hereafter called the cabinet) that stores the servo amplifier should be designed to ensure that its internal temperature rise is within +15 °C at an ambient temperature of 40 °C. Calculate the necessary heat dissipation area of the cabinet with the equation below (10.1) while allowing a margin of approximately 5 °C for a maximum ambient temperature of 60 °C.

$$A = \frac{P}{K \cdot \Delta T} \cdots (10.1)$$

A: Heat dissipation area [m^2]

P: Loss generated in the cabinet [W]

ΔT: Difference between internal and ambient temperatures [°C]

K: Heat dissipation coefficient [5 to 6]

When calculating the heat dissipation area with the equation (10.1), assume that P is the sum of all losses generated in the cabinet. Refer to the following for details about the heat generated by the servo amplifier.

☞ Page 184 Servo amplifier generated heat

"A" indicates the effective area for heat dissipation, but if the cabinet is directly installed on an insulated wall, that extra amount must be added to the cabinet's surface area. The required heat dissipation area will vary with the conditions in the cabinet. If convection in the cabinet is poor and heat builds up, effective heat dissipation will not be possible. Therefore, arrangement of the equipment in the cabinet and the use of a cooling fan should be considered. Refer to the following section for information on the required heat dissipation area (estimated) of servo amplifier cabinets when operating amplifiers at a rated load in ambient temperatures of 40 °C.

☞ Page 184 Servo amplifier generated heat

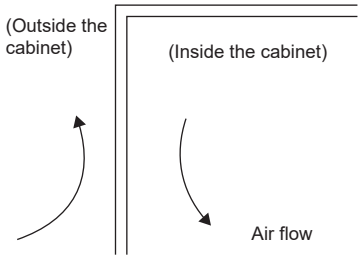

When air flows along the outer wall of the cabinet, effective heat exchange is possible, because the temperature slope inside and outside the cabinet is steeper.

Using servo amplifier with DC power supply input

The power supply capacity is the same as that for the AC power supply input.

☞ Page 173 Power supply capacity and generated loss

5.3 Dynamic brake characteristics

Point

- The coasting distance is a theoretically calculated value that does not consider the running load such as friction. Since the coasting distance changes depending on the load moment of inertia, perform a test operation to check the actual braking distance. If the braking distance is long, a moving part may crash into the stroke end. Install an anti-crash mechanism such as an air brake or an electric/mechanical stopper such as a shock absorber to reduce the shock of moving parts.
- The dynamic brake is a function used to stop in an emergency and should not be used to stop during normal operations.
- For a machine operating at the recommended load to motor inertia ratio or less, the dynamic brake can be used approximately 1000 times if the dynamic brake is used to stop the motor from the rated speed once every 10 minutes.
- If using EM1 (Forced stop 1) frequently in non-emergency situations, enable EM1 (Forced stop 1) after the servo motor has come to a complete stop.
- Servo motors for MR-J5 may have the different coasting distance from that of the previous model.
- The time constant "τ" for the electronic dynamic brake will be shorter than that of the normal dynamic brake. Therefore, the coasting distance will be shorter than that of a normal dynamic brake. For how to set the electronic dynamic brake, refer to [Pr. PF06] and [Pr. PF12] in the following manuals.

MR-J5-G/MR-J5W-G User's Manual (Parameters)
MR-J5-B/MR-J5W-B User's Manual (Parameters)
MR-J5-A User's Manual (Parameters)

Precautions related to the dynamic brake characteristics

The electronic dynamic brake operates in the initial state for the HK series servo motors listed below.

Series	Servo motor
HK-KT	HK-KT053W/HK-KT13W/HK-KT1M3W/HK-KT13UW/HK-KT23W/HK-KT43W/HK-KT63W/HK-KT23UW/HK-KT43UW
HK-ST	HK-ST52W/HK-ST1024W
HK-MT	HK-MT053W/HK-MT13W/HK-MT1M3W/HK-MT23W/HK-MT43W/HK-MT053VW/HK-MT13VW/HK-MT1M3VW/HK-MT23VW/HK-MT43VW

Dynamic brake operation

Calculation of coasting distance

The following figure shows the pattern in which the servo motor comes to a stop when the dynamic brake is operated. Use the equation (10.2) to calculate the approximate coasting distance to a stop. The dynamic brake time constant τ varies with the servo motor and machine operation speeds.

☞ Page 189 Dynamic brake time constant

A working part generally has a friction force. Therefore, the actual coasting distance will be shorter than the maximum coasting distance calculated with the following equation.

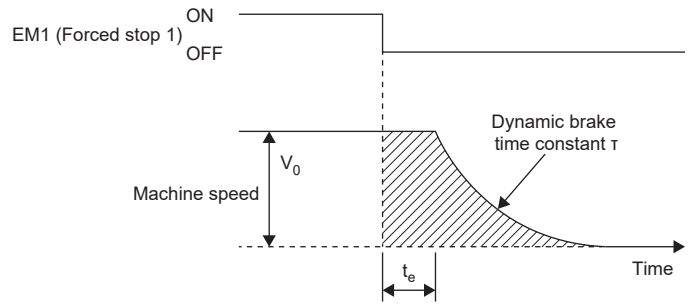

$$L_{max} = \frac{V_0}{60} \cdot \left\{ t_e + \tau \left(1 + \frac{J_L}{J_M} \right) \right\} \cdots (10.2)$$

L_{max}: Maximum coasting distance [mm]

V_0: Machine's fast feed speed [mm/min]

J_M: Moment of inertia of the servo motor [$\times 10^{-4}$ kg•m^2]

J_L: Load moment of inertia converted into equivalent value on servo motor shaft [$\times 10^{-4}$ kg•m^2]

τ: Dynamic brake time constant [s]

t_e: Delay time of control section [s]

There is an internal relay delay time of about 10 ms.

Dynamic brake time constant

The following shows dynamic brake time constant τ that is necessary to calculate the equation (10.2).

■200 V class servo amplifier

Servo motor	Servo amplifier	Waveform
HK-KT053W	MR-J5-10_ MR-J5-20_ MR-J5-40_ MR-J5W2-22_ MR-J5W2-44_ MR-J5W3-222_ MR-J5W3-444_	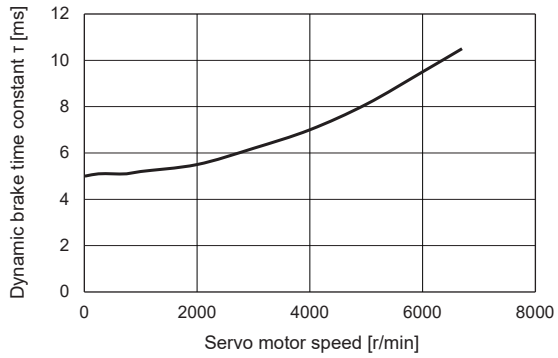
HK-KT13W	MR-J5-10_ MR-J5-20_ MR-J5-40_ MR-J5W2-22_ MR-J5W2-44_ MR-J5W3-222_ MR-J5W3-444_	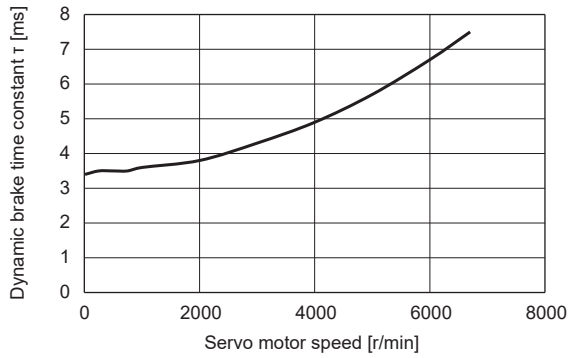
HK-KT1M3W	MR-J5-20_ MR-J5-40_ MR-J5-60_ MR-J5W2-22_ MR-J5W2-44_ MR-J5W3-222_ MR-J5W3-444_	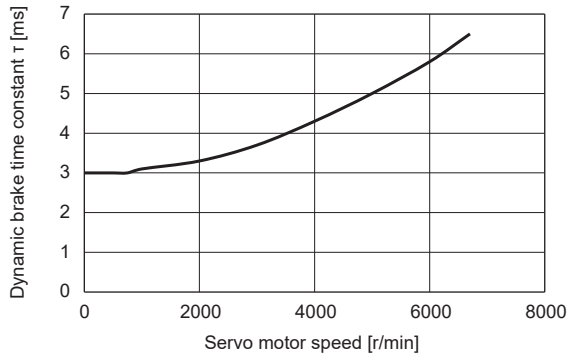
HK-KT13UW	MR-J5-10_ MR-J5-20_ MR-J5-40_ MR-J5W2-22_ MR-J5W2-44_ MR-J5W3-222_ MR-J5W3-444_	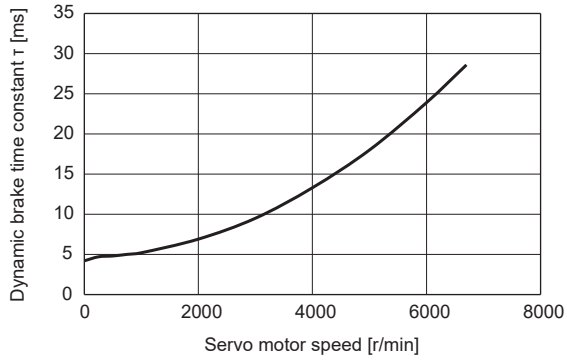

Servo motor	Servo amplifier	Waveform
HK-KT23W	MR-J5-20_ MR-J5-40_ MR-J5-60_ MR-J5W2-22_ MR-J5W2-44_ MR-J5W3-222_ MR-J5W3-444_	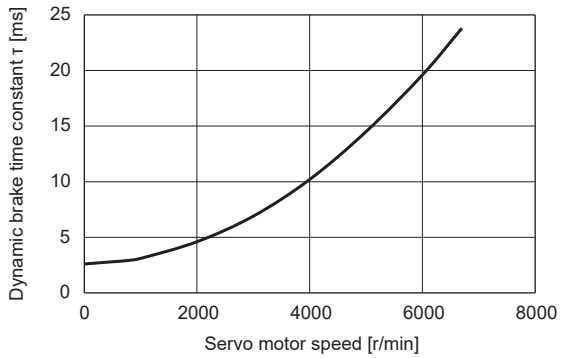
	MR-J5-40_ MR-J5-60_ MR-J5W2-44_ MR-J5W3-444_	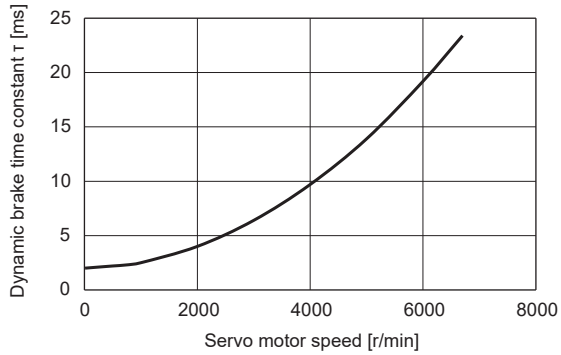
	MR-J5-70_ MR-J5W2-77_	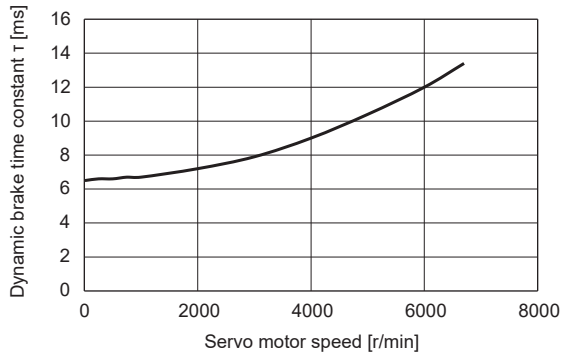
	MR-J5W2-1010_	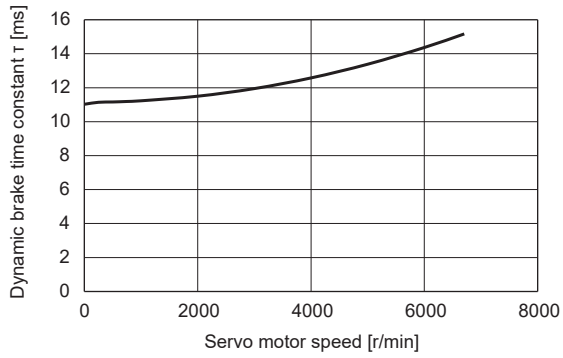

Servo motor	Servo amplifier	Waveform
HK-KT63W	MR-J5-70_ MR-J5W2-77_	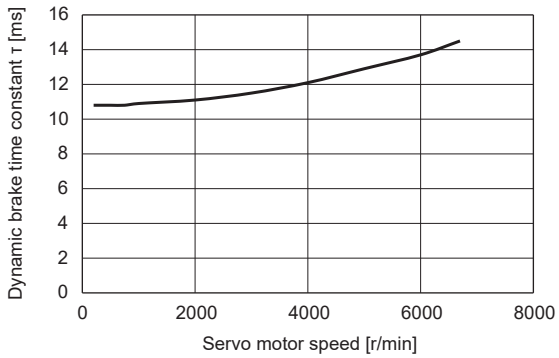
	MR-J5-100_ MR-J5W2-1010_	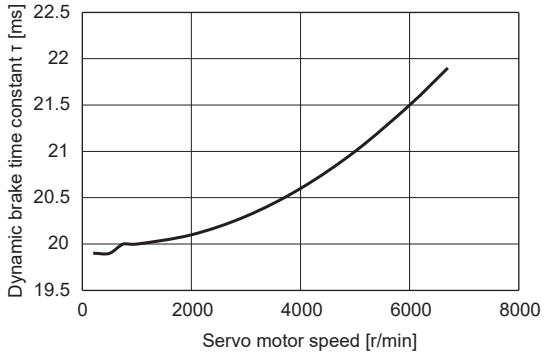
	MR-J5-200_	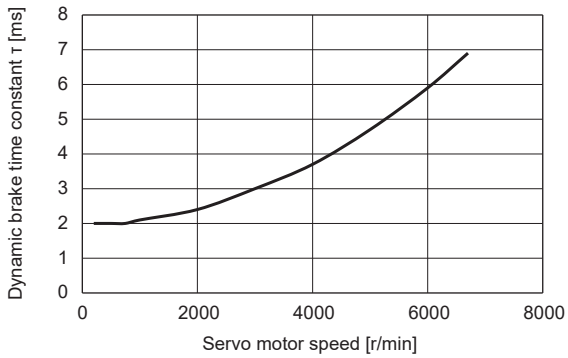
HK-KT23UW	MR-J5-20_ MR-J5-40_ MR-J5-60_ MR-J5W2-22_ MR-J5W2-44_ MR-J5W3-222_ MR-J5W3-444_	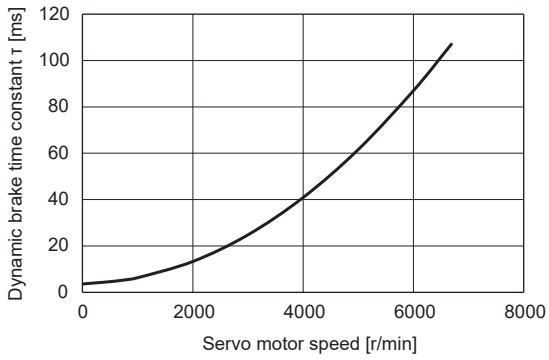

Servo motor	Servo amplifier	Waveform
HK-KT43UW	MR-J5-40_ MR-J5-60_ MR-J5W2-44_ MR-J5W3-444_	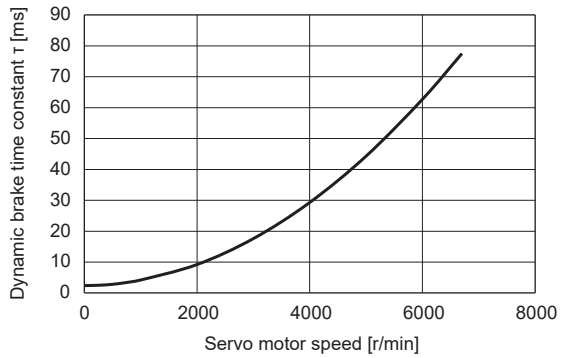
	MR-J5-70_ MR-J5W2-77_ MR-J5W2-1010_	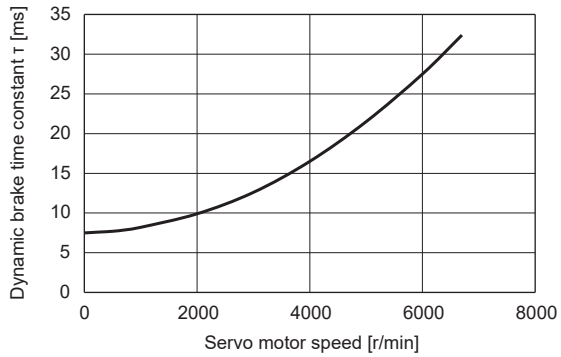

Servo motor	Servo amplifier	Waveform
HK-KT7M3W	MR-J5-70_ MR-J5W2-77_	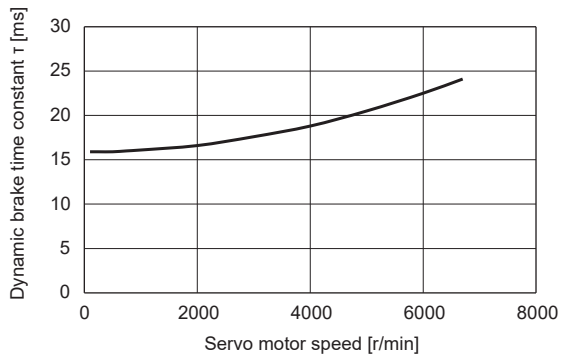
	MR-J5-100_ MR-J5W2-1010_	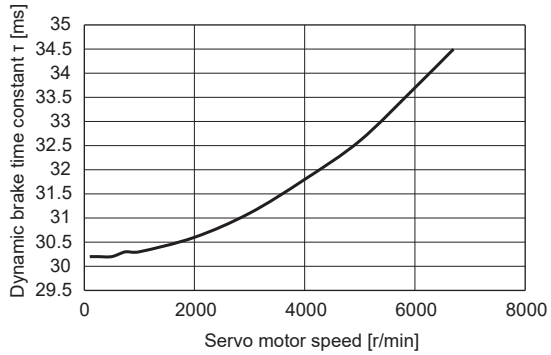
	MR-J5-200_	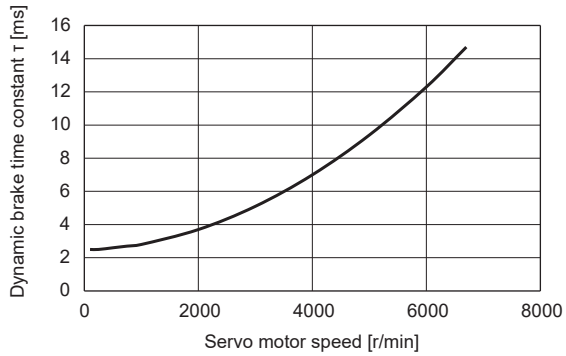

Servo motor	Servo amplifier	Waveform
HK-KT103W	MR-J5-100_ MR-J5W2-1010_	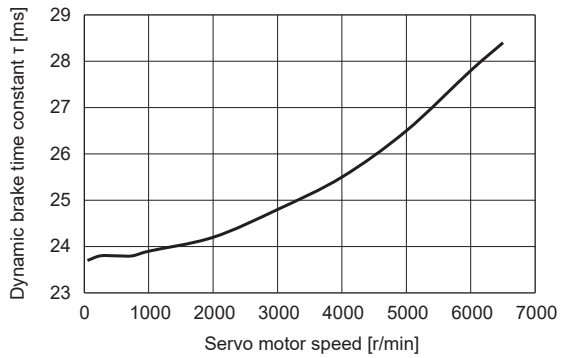
	MR-J5-200_ MR-J5-350_	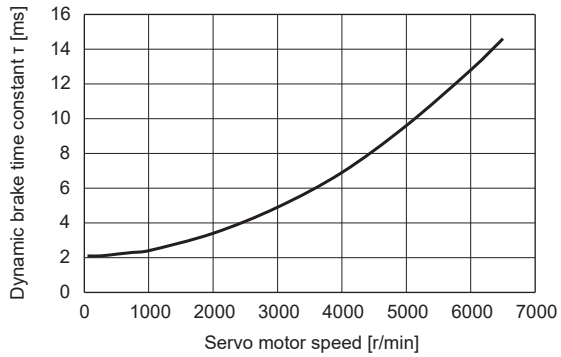

Servo motor	Servo amplifier	Waveform
HK-KT63UW	MR-J5-60_	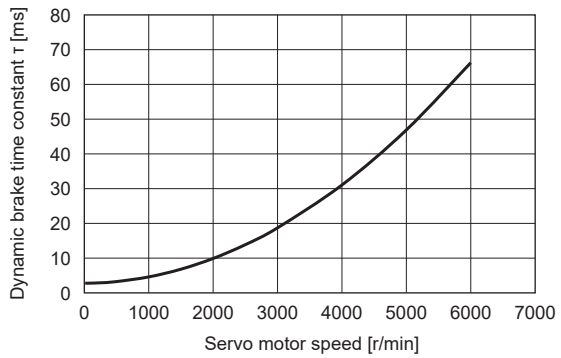
	MR-J5-70_ MR-J5W2-77_	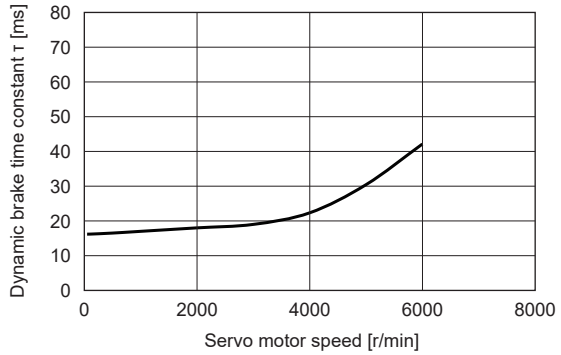
	MR-J5-100_ MR-J5W2-1010_	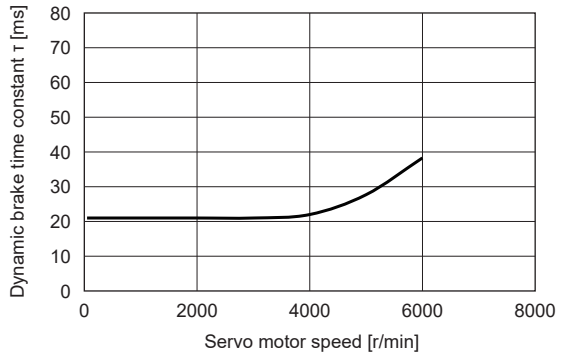

Servo motor	Servo amplifier	Waveform
HK-KT7M3UW	MR-J5-70_ MR-J5W2-77_	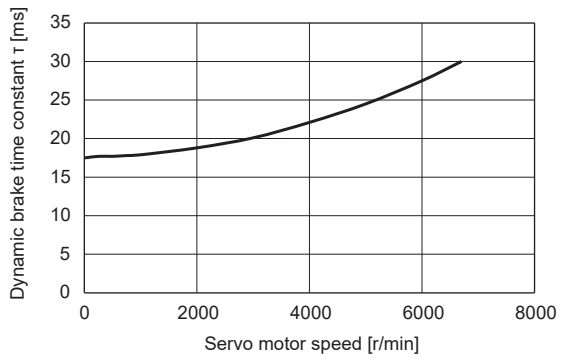
	MR-J5-100_ MR-J5W2-1010_	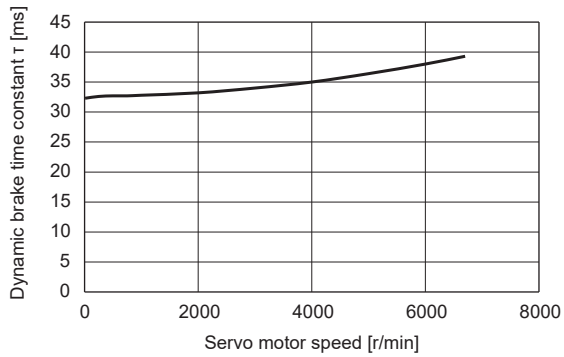
	MR-J5-200_	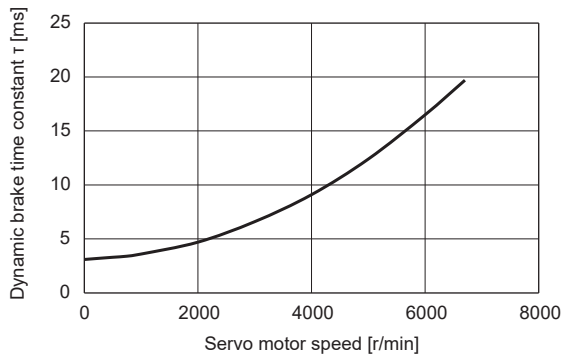

Servo motor	Servo amplifier	Waveform
HK-KT103UW	MR-J5-100_ MR-J5W2-1010_	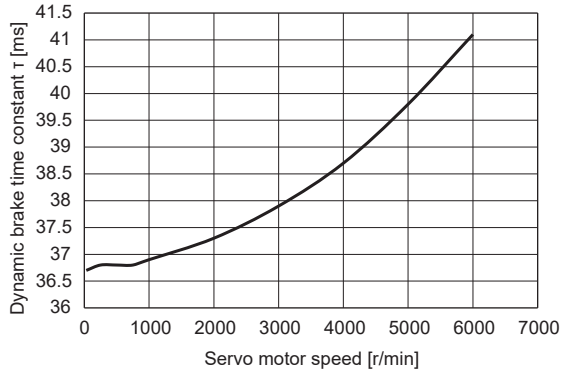
	MR-J5-200_ MR-J5-350_	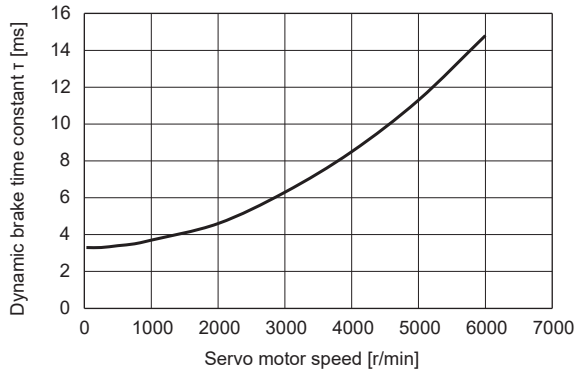
HK-KT153W	MR-J5-200_ MR-J5-350_	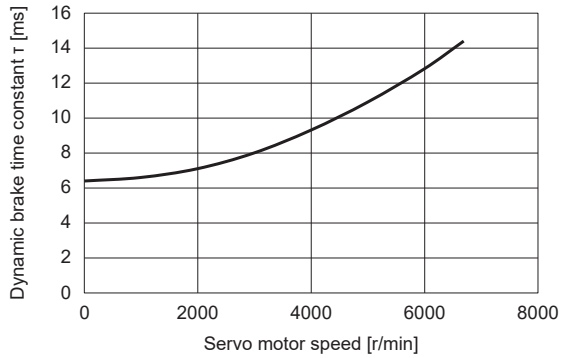
HK-KT203W	MR-J5-200_ MR-J5-350_	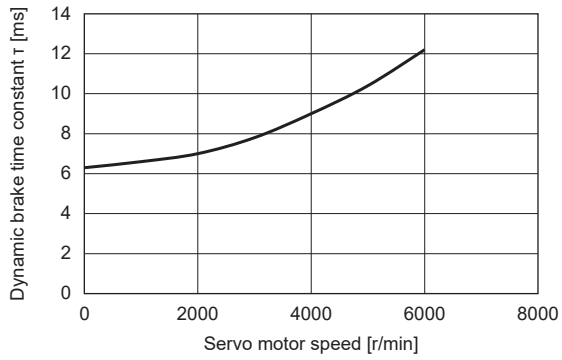

Servo motor	Servo amplifier	Waveform
HK-KT202W	MR-J5-200_ MR-J5-350_	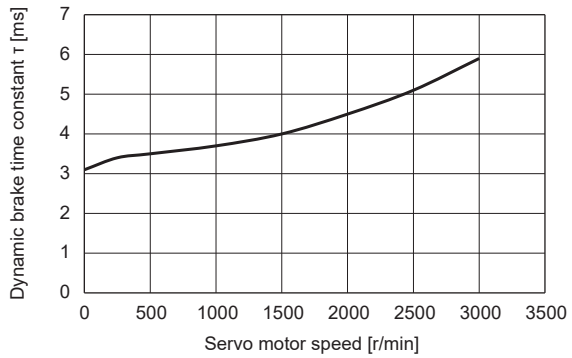
HK-KT434W	MR-J5-20_ MR-J5-40_ MR-J5-60_ MR-J5W2-22_ MR-J5W2-44_ MR-J5W3-222_ MR-J5W3-444_	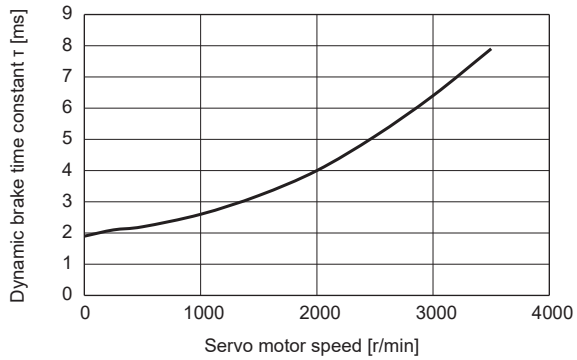

Servo motor	Servo amplifier	Waveform
HK-KT634W	MR-J5-40_ MR-J5-60_ MR-J5W2-44_ MR-J5W3-444_	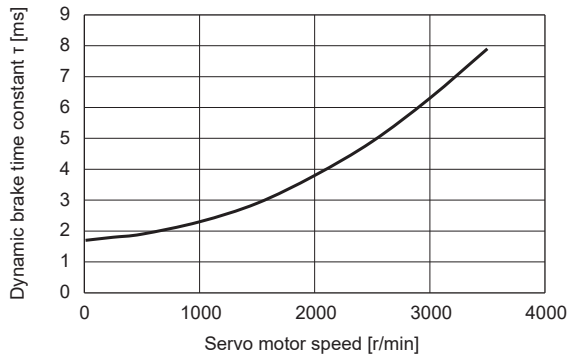
	MR-J5-70_ MR-J5W2-77_	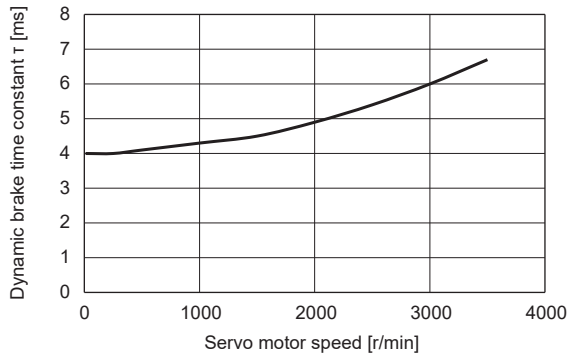
	MR-J5W2-1010_	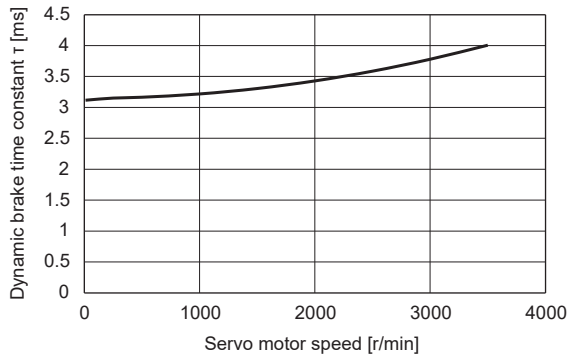

Servo motor	Servo amplifier	Waveform
HK-KT7M34W	MR-J5-40_ MR-J5-60_ MR-J5W2-44_ MR-J5W3-444_	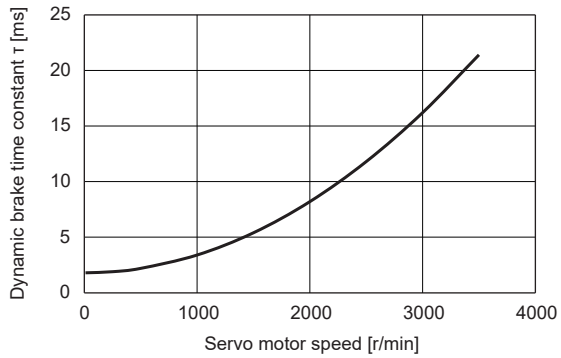
	MR-J5-70_ MR-J5W2-77_	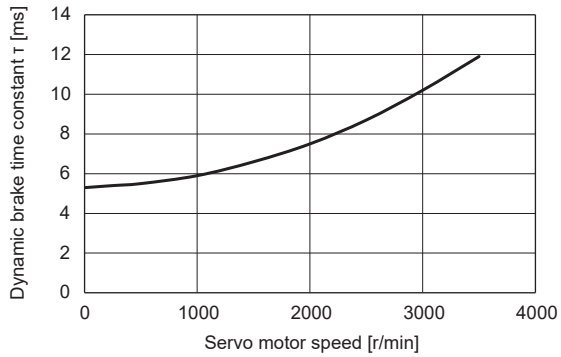
	MR-J5W2-1010_	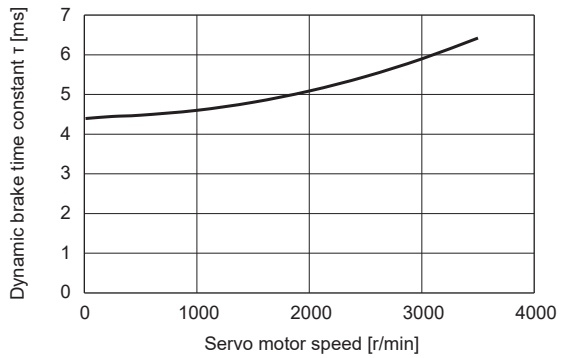

Servo motor	Servo amplifier	Waveform
HK-KT1034W	MR-J5-60_	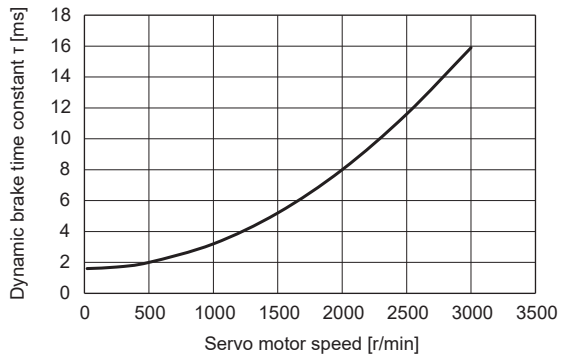
	MR-J5-70_ MR-J5W2-77_	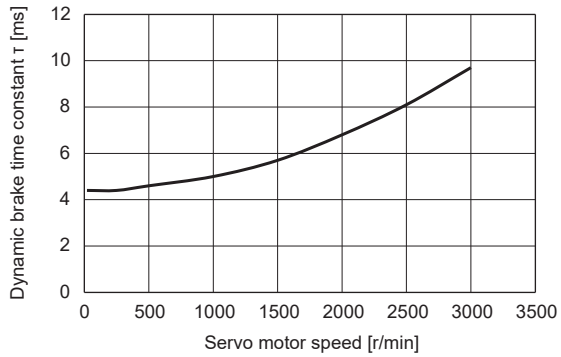
	MR-J5-100_ MR-J5W2-1010_	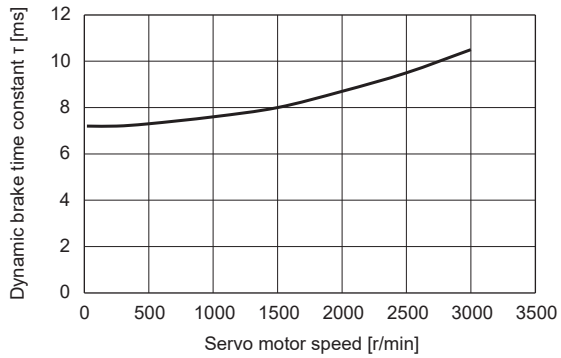

Servo motor	Servo amplifier	Waveform
HK-KT1534W	MR-J5-70_ MR-J5W2-77_	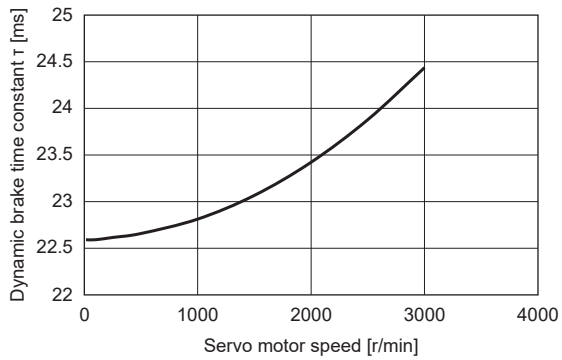
	MR-J5-100_ MR-J5W2-1010_	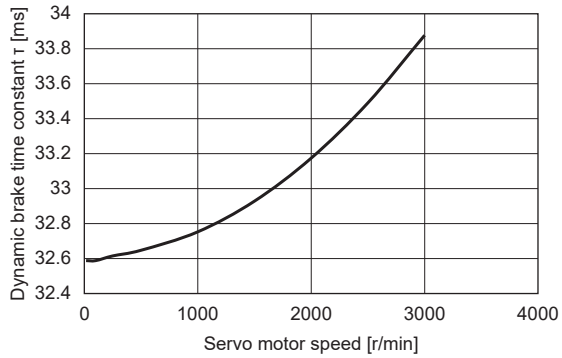
	MR-J5-200_	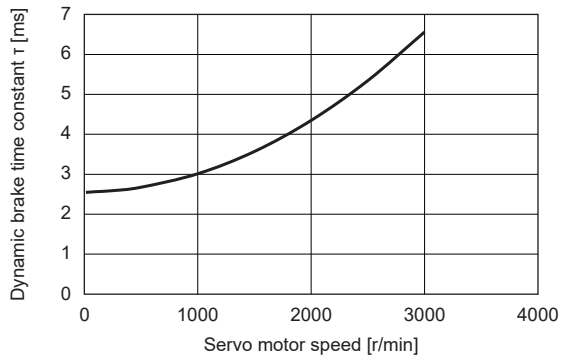

Servo motor	Servo amplifier	Waveform
HK-KT2034W	MR-J5-100_ MR-J5W2-1010_	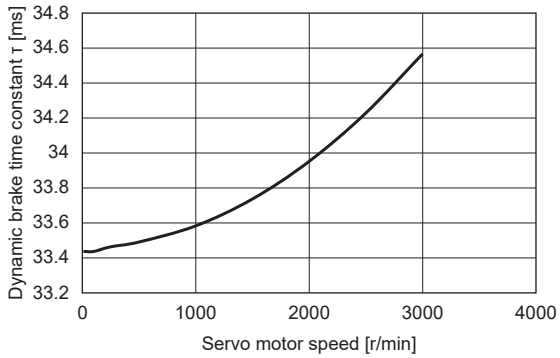
	MR-J5-200_ MR-J5-350_	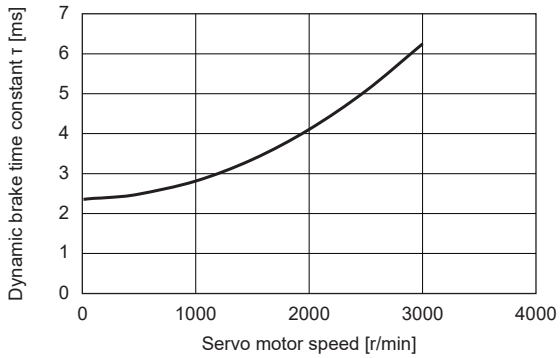
HK-KT2024W	MR-J5-100_ MR-J5W2-1010_	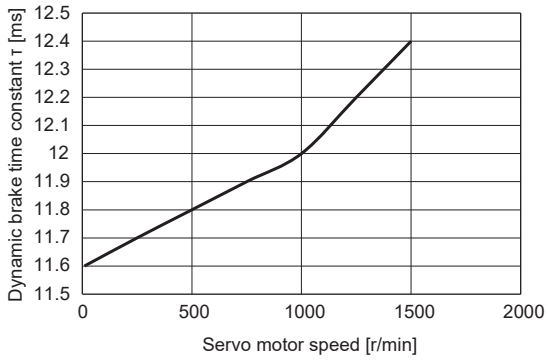
	MR-J5-200_ MR-J5-350_	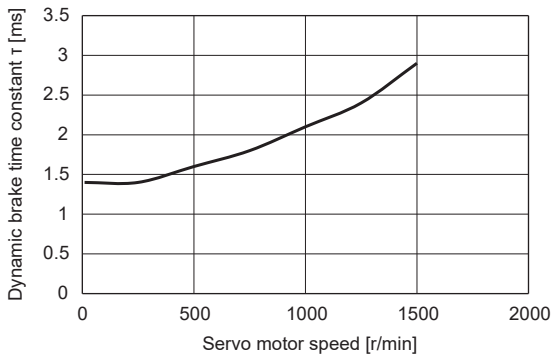

Servo motor	Servo amplifier	Waveform
HK-MT053W	MR-J5-10_ MR-J5-20_ MR-J5-40_ MR-J5W2-22_ MR-J5W2-44_ MR-J5W3-222_ MR-J5W3-444_	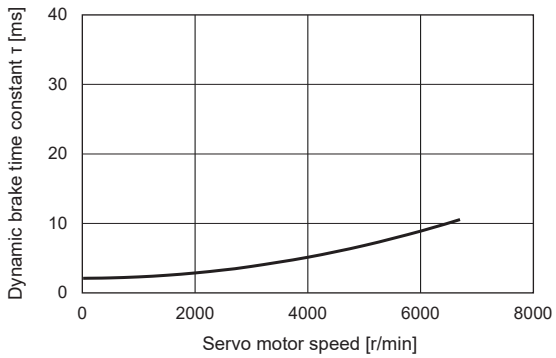
HK-MT13W	MR-J5-10_ MR-J5-20_ MR-J5-40_ MR-J5W2-22_ MR-J5W2-44_ MR-J5W3-222_ MR-J5W3-444_	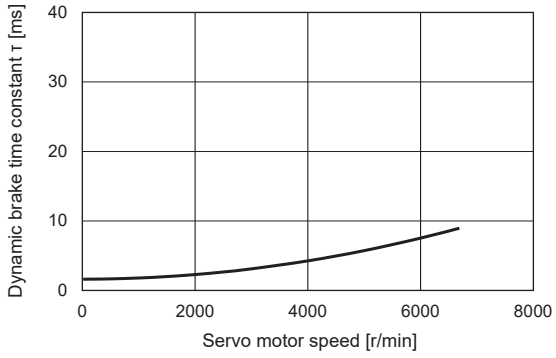
HK-MT1M3W	MR-J5-20_ MR-J5-40_ MR-J5W2-22_ MR-J5W2-44_ MR-J5W3-222_ MR-J5W3-444_	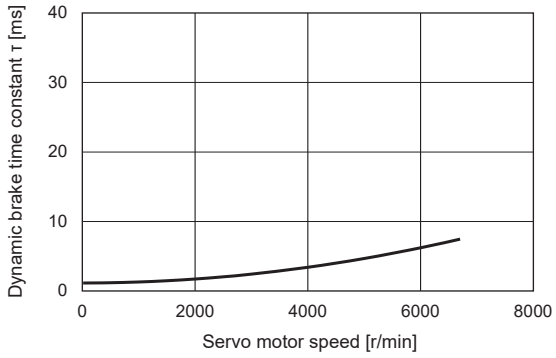
HK-MT23W	MR-J5-20_ MR-J5-40_ MR-J5W2-22_ MR-J5W2-44_ MR-J5W3-222_ MR-J5W3-444_	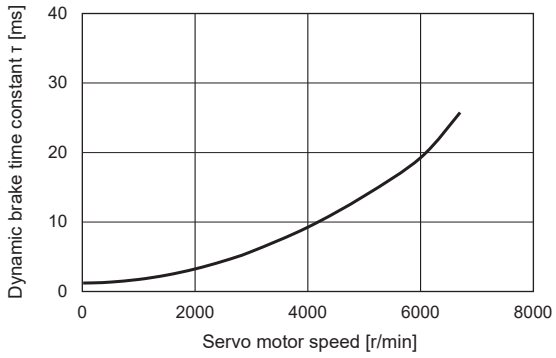

Servo motor	Servo amplifier	Waveform
HK-MT43W	MR-J5-40_	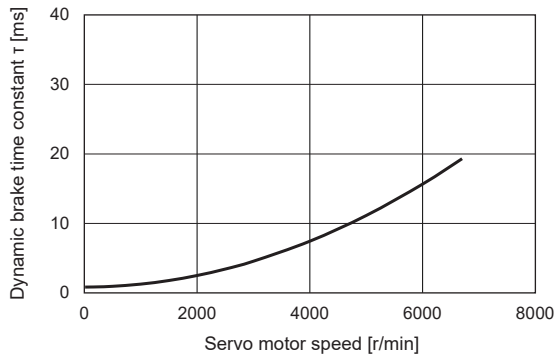
	MR-J5-70_ MR-J5W2-77_	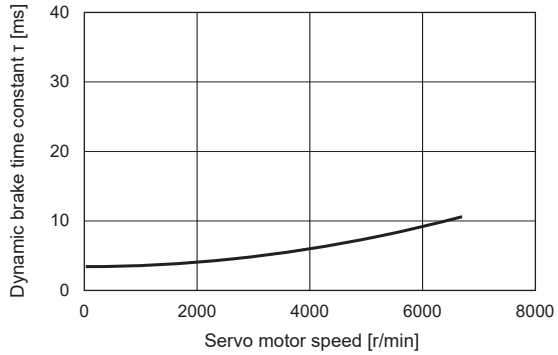
	MR-J5W2-1010_	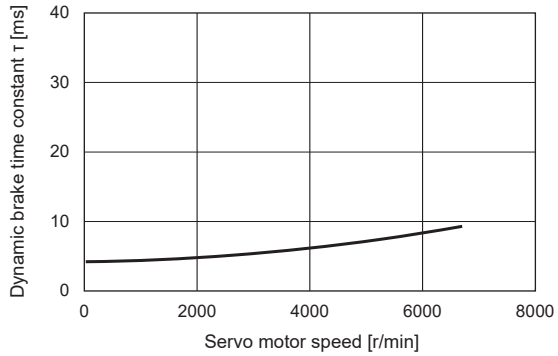

Servo motor	Servo amplifier	Waveform
HK-MT63W	MR-J5-70_ MR-J5W2-77_	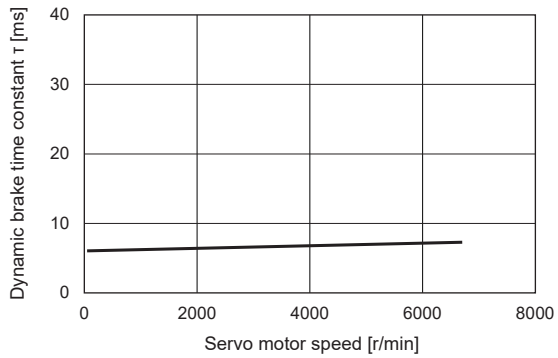
	MR-J5-200_	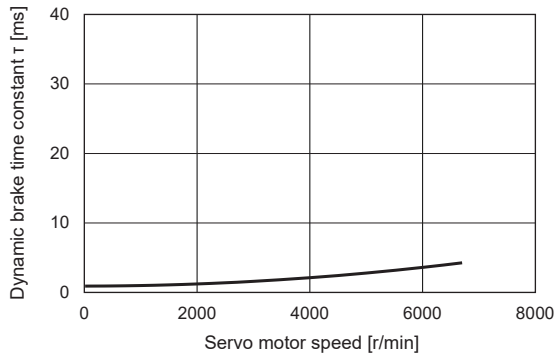
	MR-J5W2-1010_	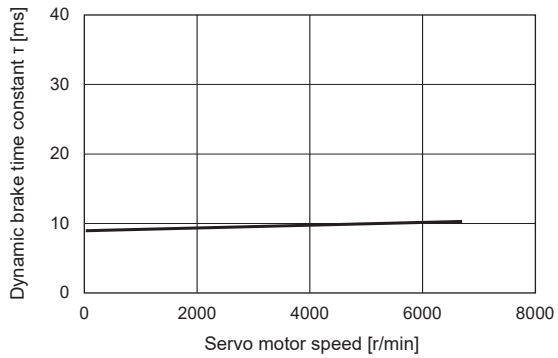

Servo motor	Servo amplifier	Waveform
HK-MT7M3W	MR-J5-70_ MR-J5W2-77_	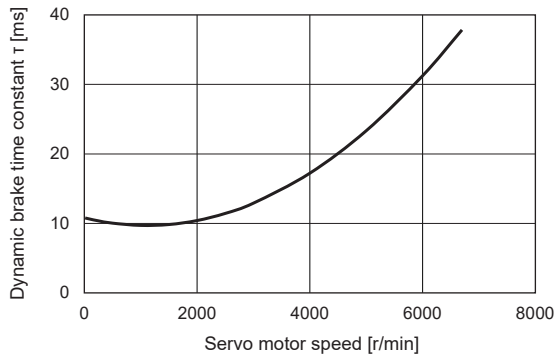
	MR-J5-200_	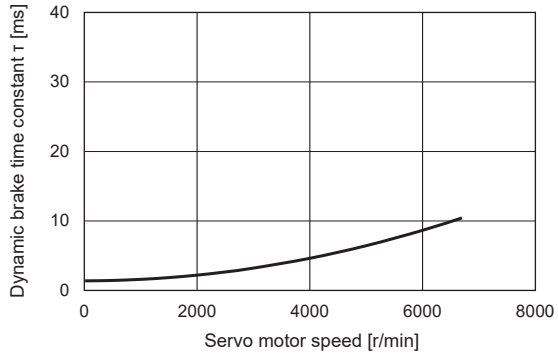
	MR-J5W2-1010_	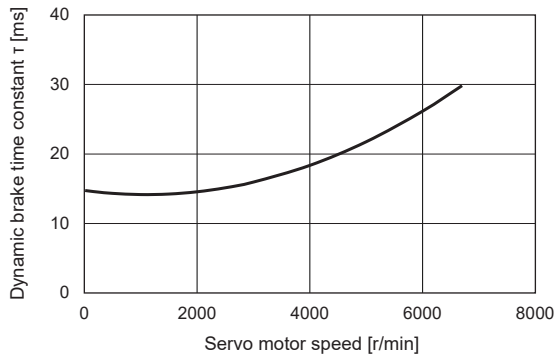

Servo motor	Servo amplifier	Waveform
HK-MT103W	MR-J5-100_ MR-J5W2-1010_	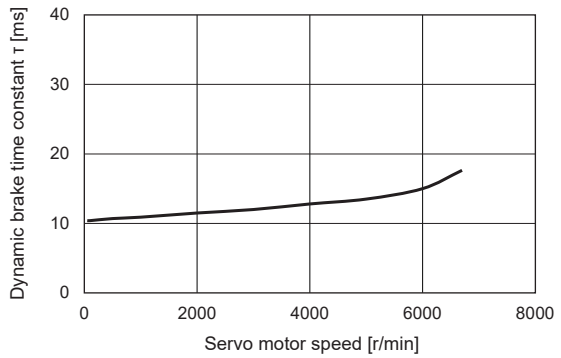
	MR-J5-200_	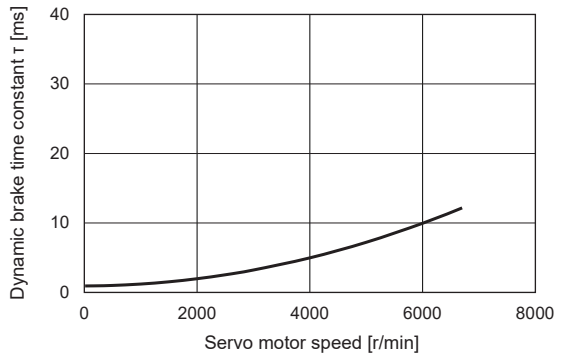
HK-MT053VW	MR-J5-10_ MR-J5-20_ MR-J5-40_ MR-J5W2-22_ MR-J5W2-44_ MR-J5W3-222_ MR-J5W3-444_	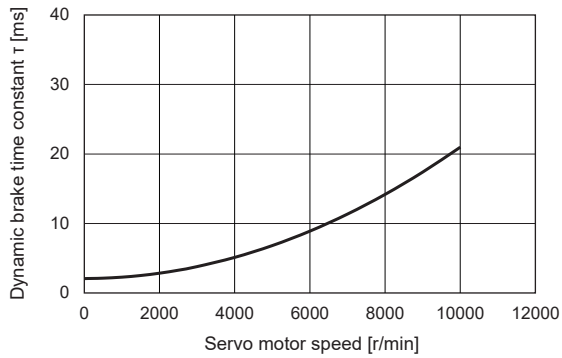
HK-MT13VW	MR-J5-10_ MR-J5-20_ MR-J5-40_ MR-J5W2-22_ MR-J5W2-44_ MR-J5W3-222_ MR-J5W3-444_	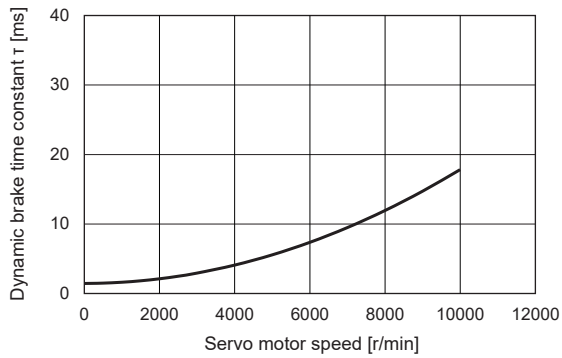

Servo motor	Servo amplifier	Waveform
HK-MT1M3VW	MR-J5-20_ MR-J5-40_ MR-J5W2-22_ MR-J5W2-44_ MR-J5W3-222_ MR-J5W3-444_	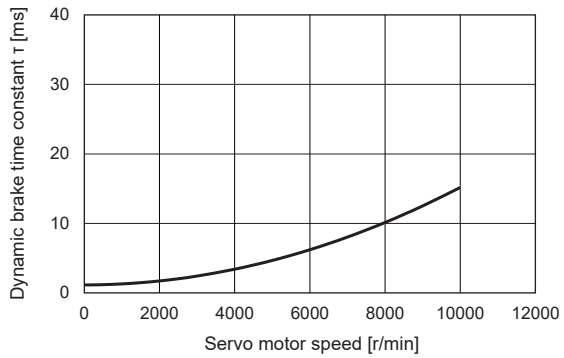
HK-MT23VW	MR-J5-20_ MR-J5-40_ MR-J5W2-22_ MR-J5W2-44_ MR-J5W3-222_ MR-J5W3-444_	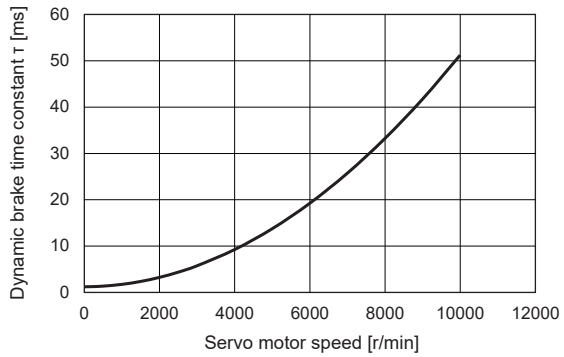

Servo motor	Servo amplifier	Waveform
HK-MT43VW	MR-J5-60_	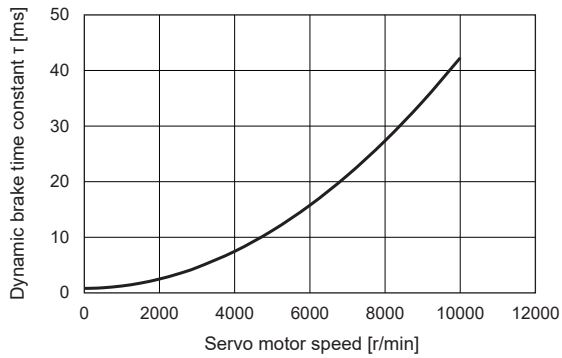
	MR-J5-70_ MR-J5W2-77_	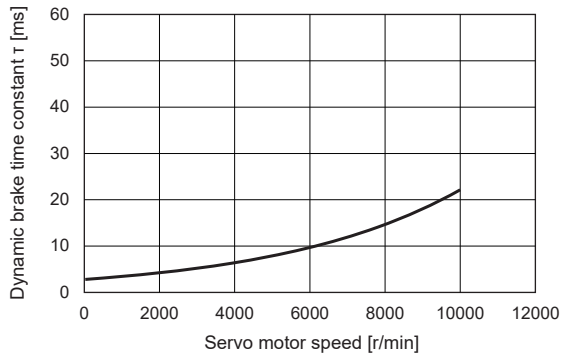
	MR-J5W2-1010_	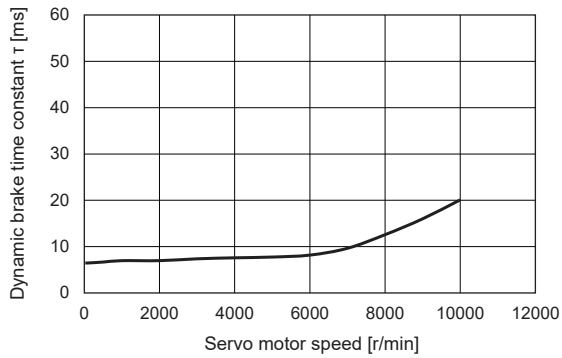

Servo motor	Servo amplifier	Waveform
HK-MT63VW	MR-J5-70_ MR-J5W2-77_	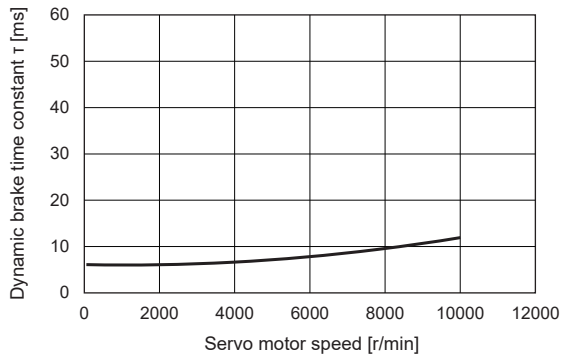
	MR-J5-200_	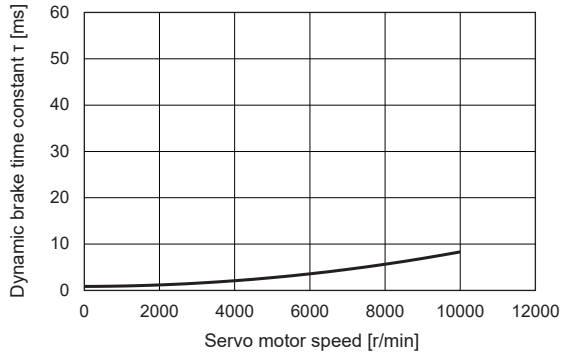
	MR-J5W2-1010_	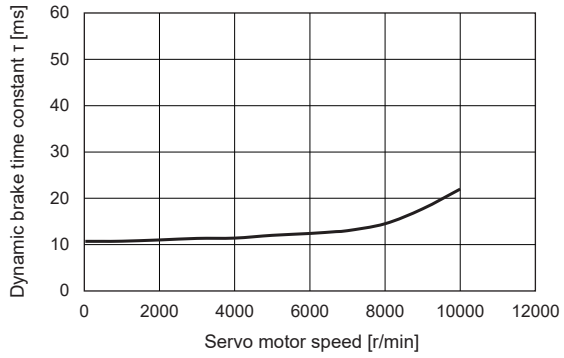

Servo motor	Servo amplifier	Waveform
HK-MT7M3VW	MR-J5-70_ MR-J5W2-77_	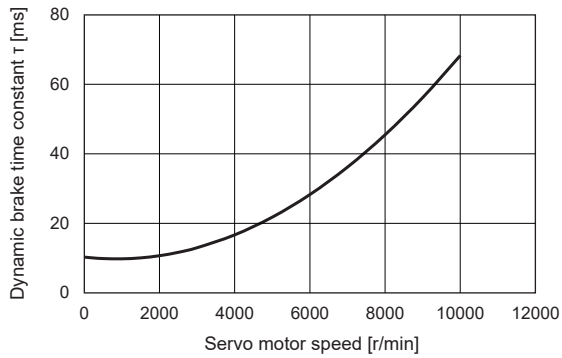
	MR-J5-200_	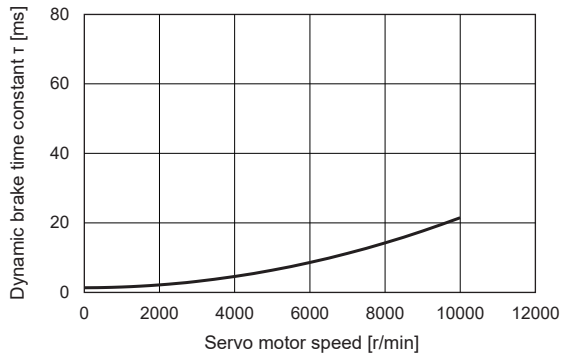
	MR-J5W2-1010_	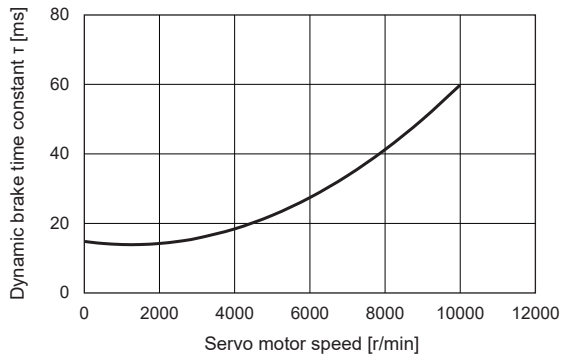
HK-MT103VW	MR-J5-200_ MR-J5-350_	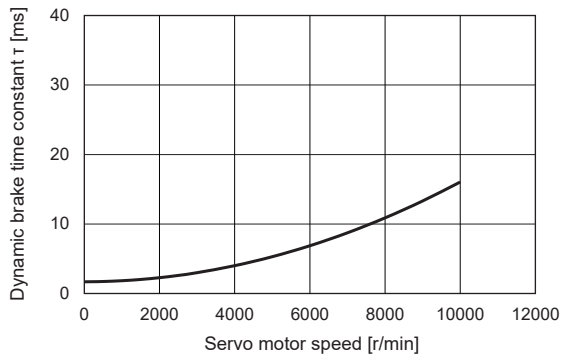

Servo motor	Servo amplifier	Waveform
HK-ST52W	MR-J5-60_	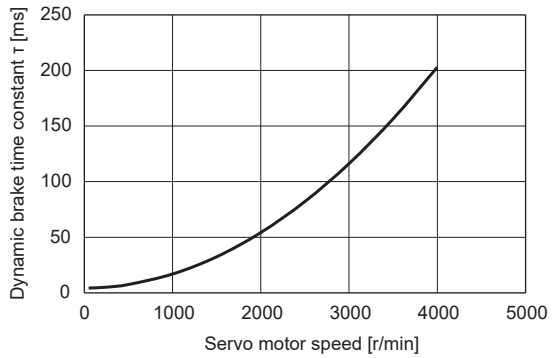
	MR-J5-70_ MR-J5W2-77_	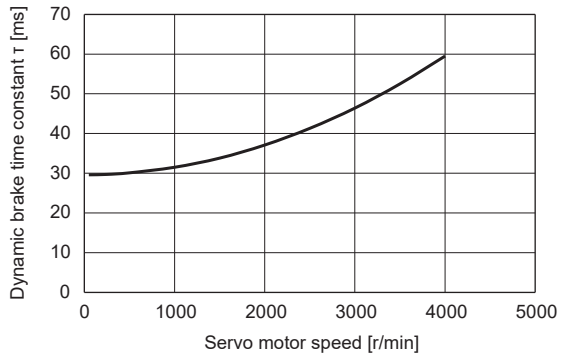
	MR-J5-100_ MR-J5W2-1010_	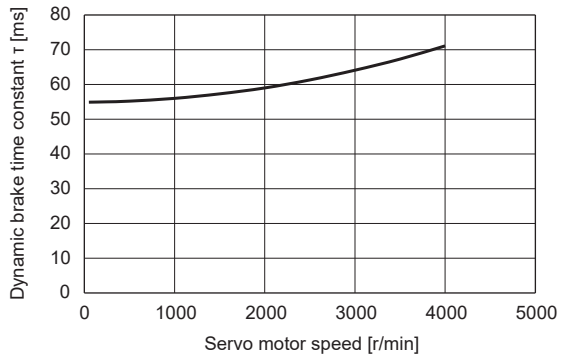

Servo motor	Servo amplifier	Waveform
HK-ST102W	MR-J5-100_ MR-J5W2-1010_	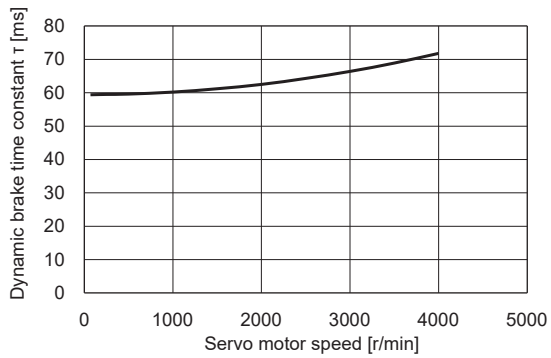
	MR-J5-200_ MR-J5-350_	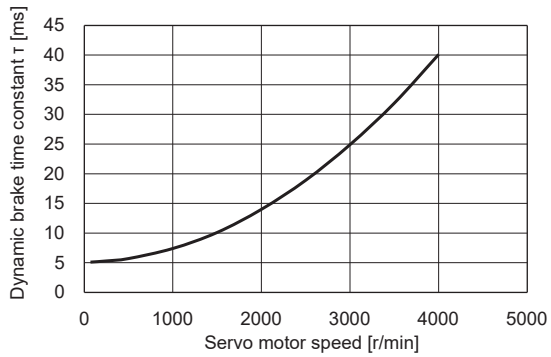
HK-ST172W	MR-J5-200_ MR-J5-350_	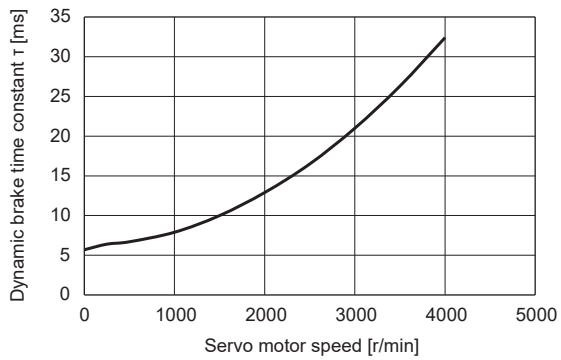
HK-ST202AW	MR-J5-200_ MR-J5-350_	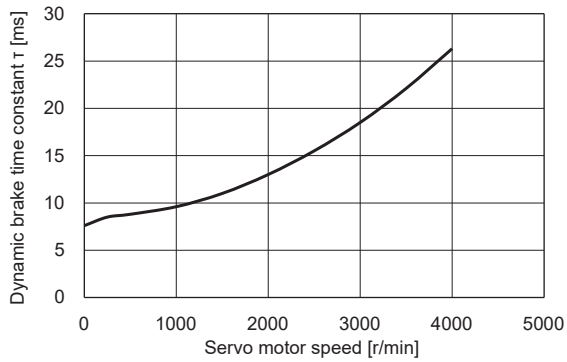

Servo motor	Servo amplifier	Waveform
HK-ST302W	MR-J5-350_	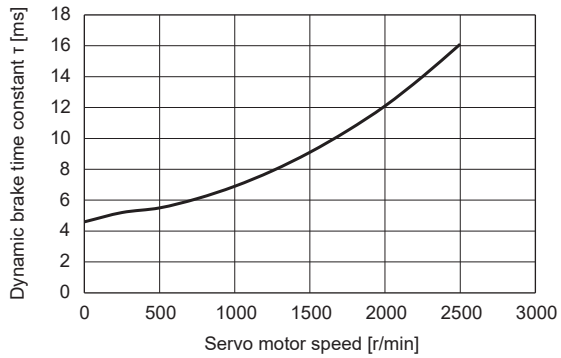
	MR-J5-500_	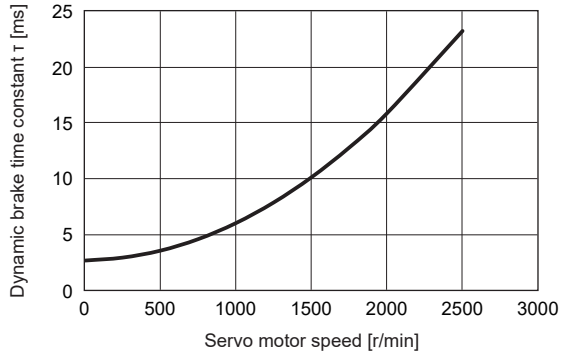
HK-ST353W	MR-J5-350_	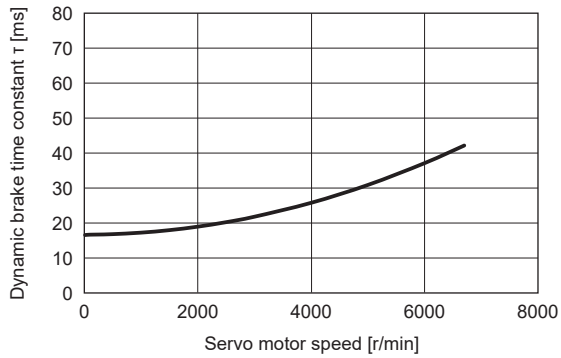
	MR-J5-500_	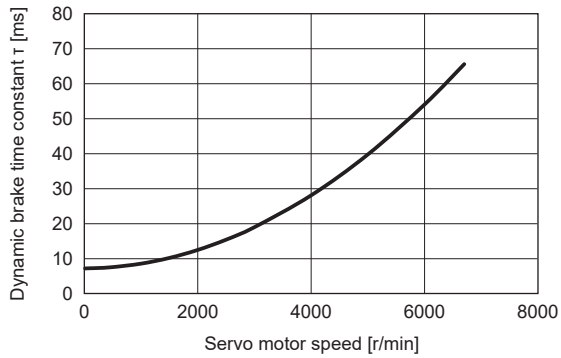

Servo motor	Servo amplifier	Waveform
HK-ST503W	MR-J5-500_	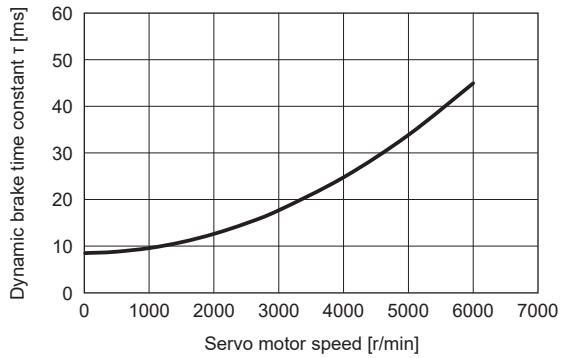
	MR-J5-700_	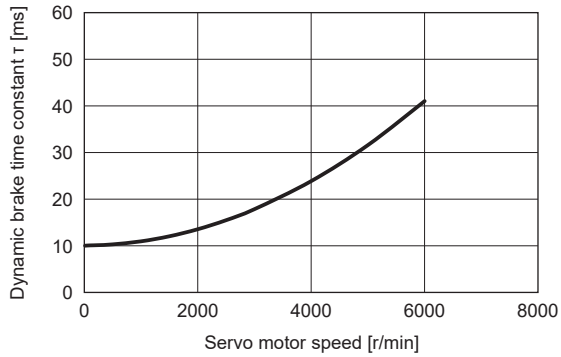

Servo motor	Servo amplifier	Waveform
HK-ST7M2UW	MR-J5-70_	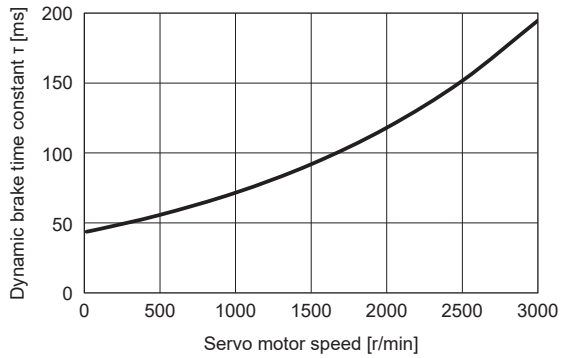
	MR-J5-100_	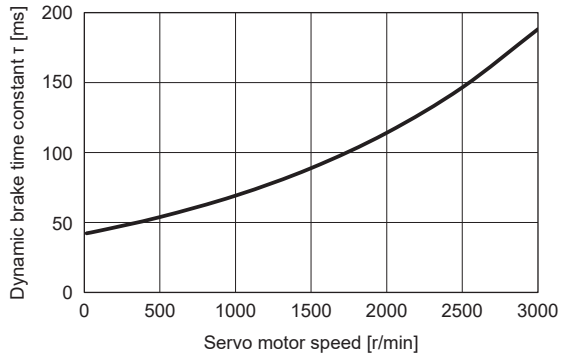
	MR-J5-200_	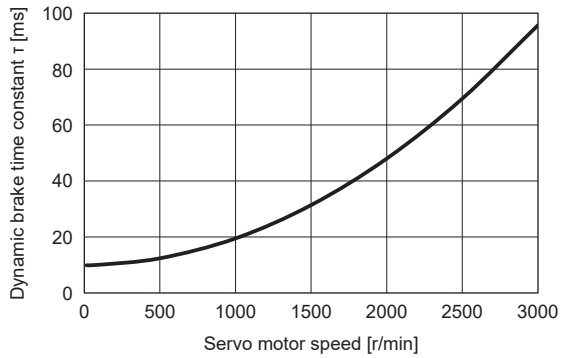
HK-ST172UW	MR-J5-200_ MR-J5-350_	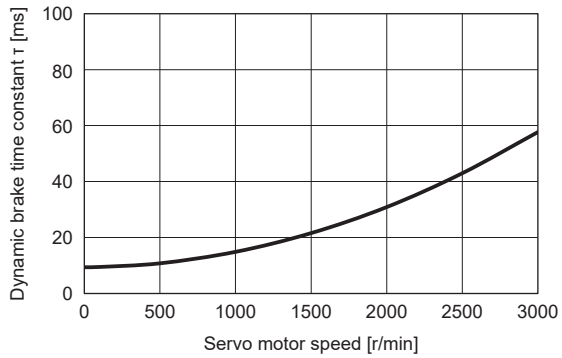

Servo motor	Servo amplifier	Waveform
HK-ST202W	MR-J5-200_ MR-J5-350_	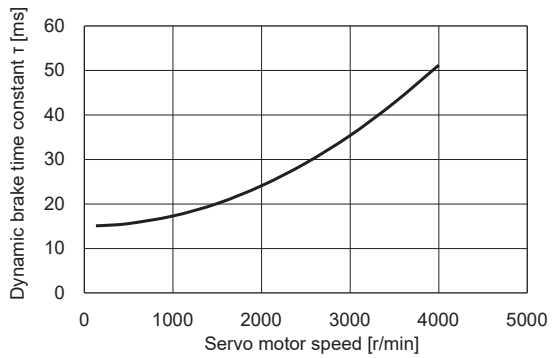
HK-ST353W	MR-J5-350_	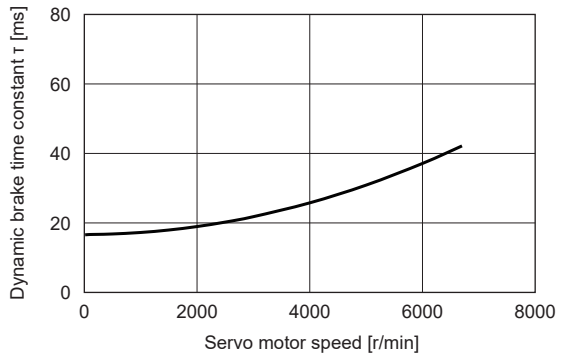
	MR-J5-500_	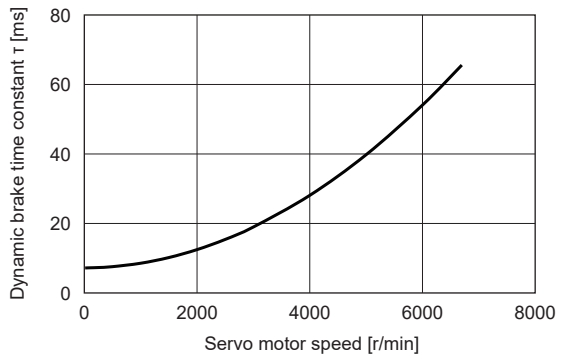

Servo motor	Servo amplifier	Waveform
HK-ST352W	MR-J5-350_	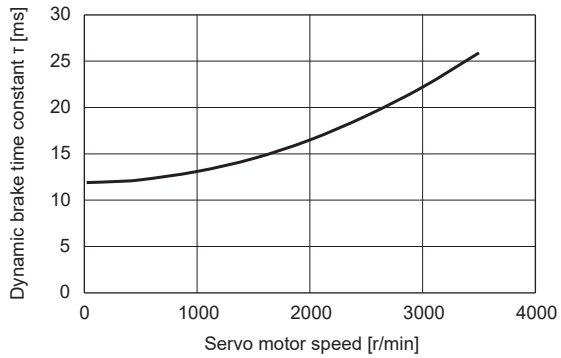
	MR-J5-500_	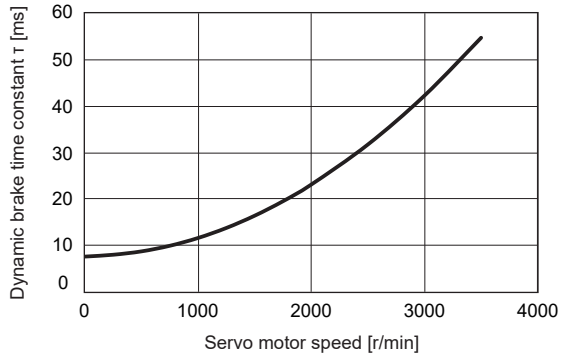
HK-ST503W	MR-J5-500_	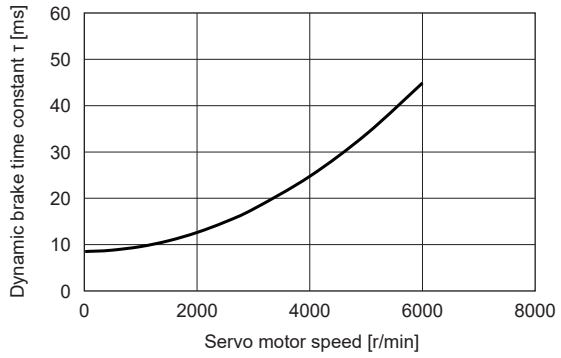
	MR-J5-700_	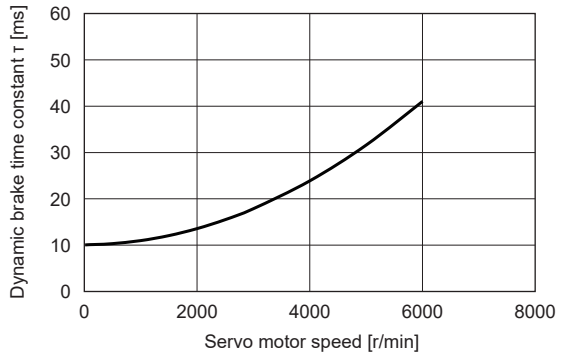

Servo motor	Servo amplifier	Waveform
HK-ST502W	MR-J5-500_	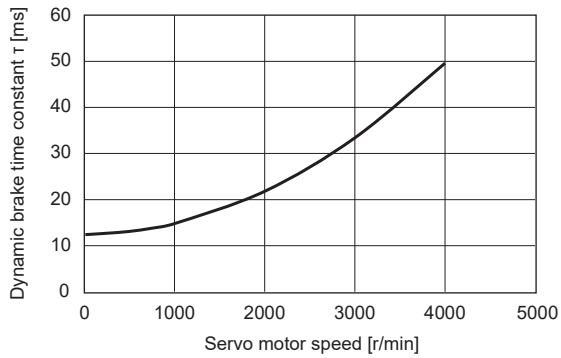
	MR-J5-700_	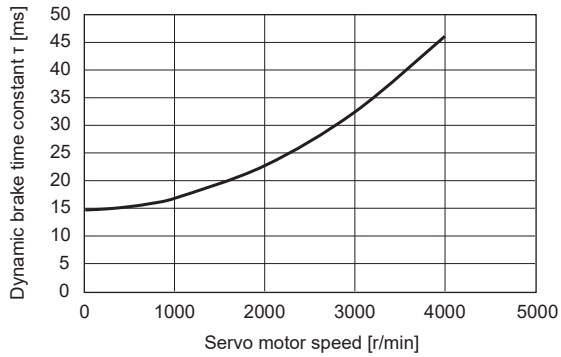
HK-ST702W	MR-J5-700_	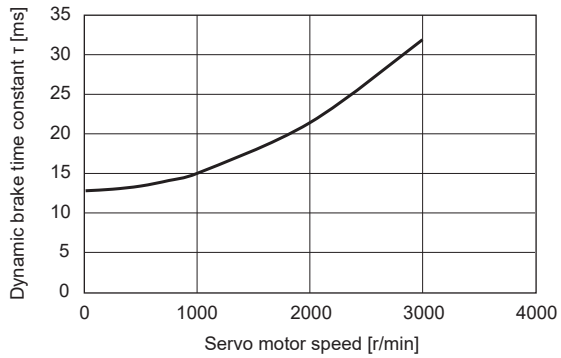

Servo motor	Servo amplifier	Waveform
HK-ST524W	MR-J5-40_ MR-J5-60_ MR-J5W2-44_ MR-J5W3-444_	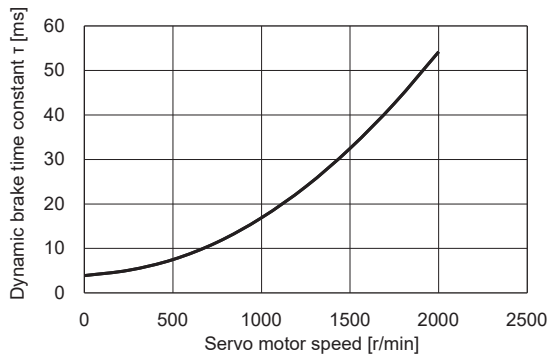
	MR-J5-70_ MR-J5W2-77_	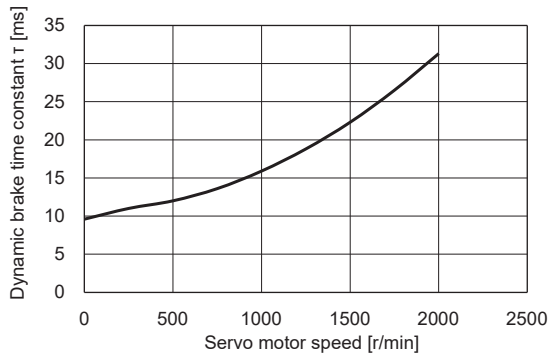

Servo motor	Servo amplifier	Waveform
HK-ST1024W	MR-J5-60_	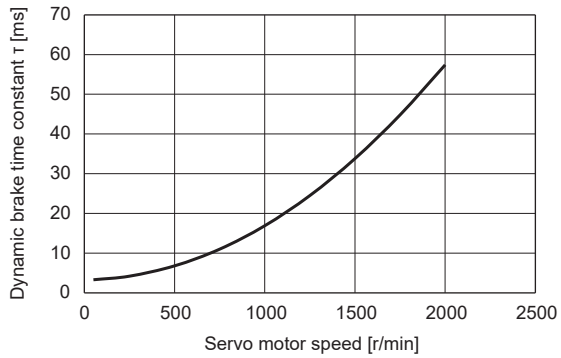
	MR-J5-70_ MR-J5W2-77_	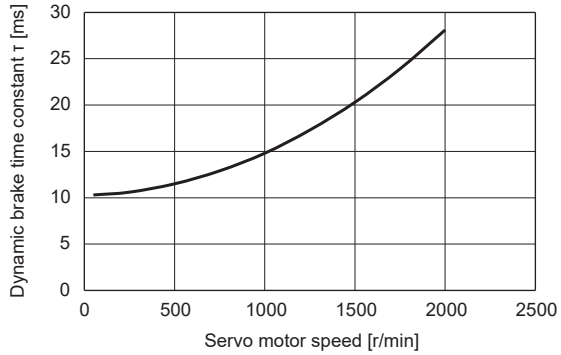
	MR-J5-100_ MR-J5W2-1010_	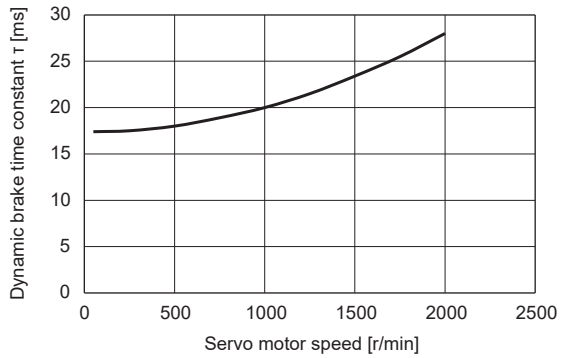

Servo motor	Servo amplifier	Waveform
HK-ST1724W	MR-J5-100_ MR-J5W2-1010_	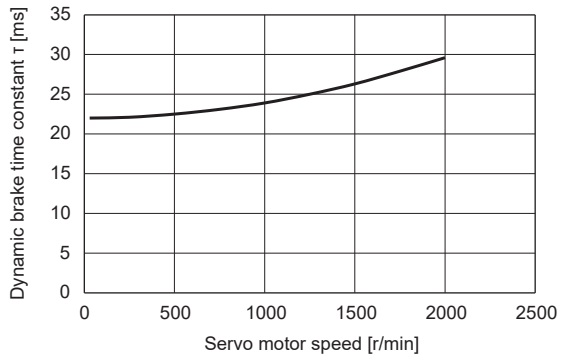
	MR-J5-200_ MR-J5-350_	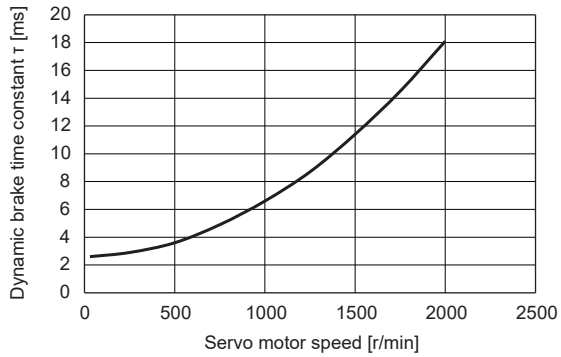
HK-ST2024AW	MR-J5-100_ MR-J5W2-1010_	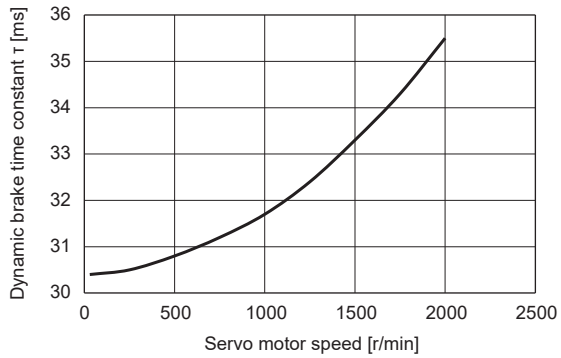
	MR-J5-200_ MR-J5-350_	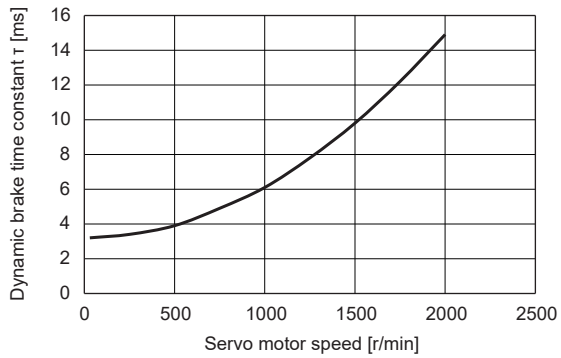

Servo motor	Servo amplifier	Waveform
HK-ST3024W	MR-J5-200_ MR-J5-350_	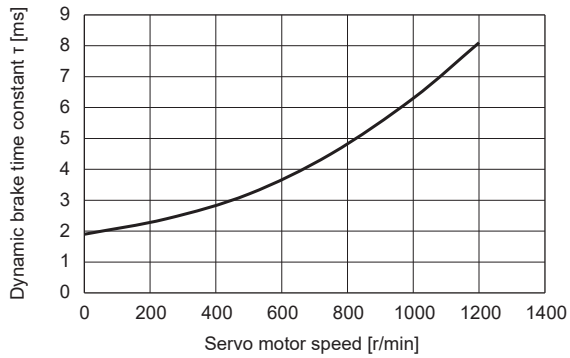
HK-ST2024W	MR-J5-200_ MR-J5-350_	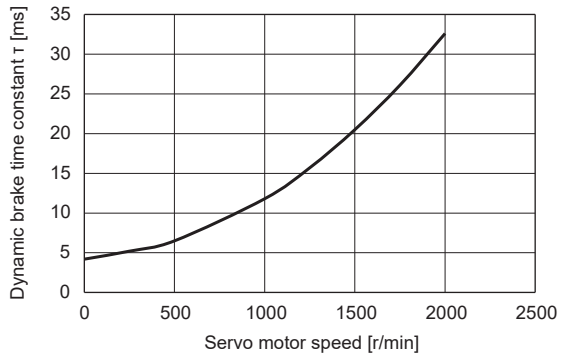
HK-ST3524W	MR-J5-200_ MR-J5-350_	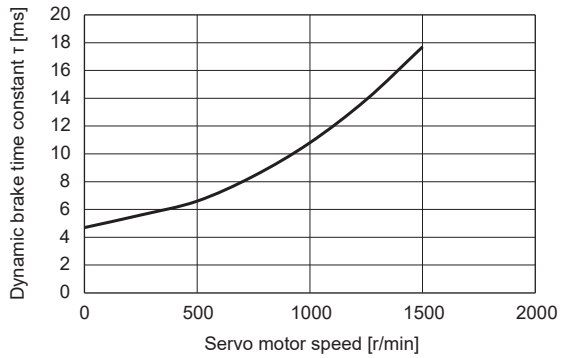

Servo motor	Servo amplifier	Waveform
HK-ST5024W	MR-J5-350_	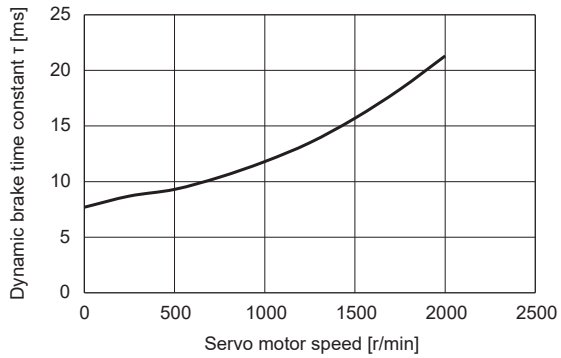
	MR-J5-500_	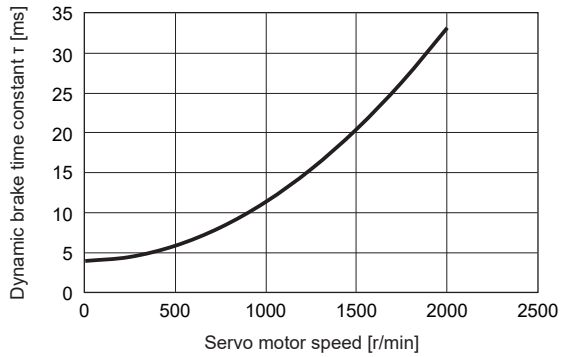
HK-ST7024W	MR-J5-500_	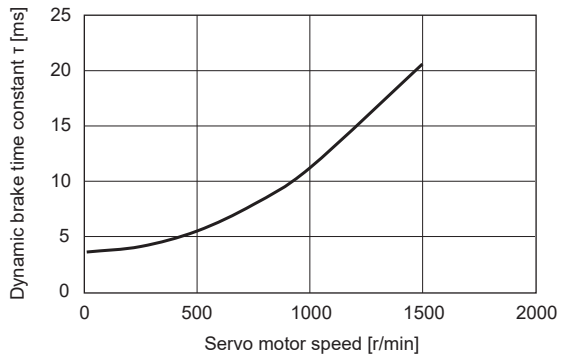
	MR-J5-700_	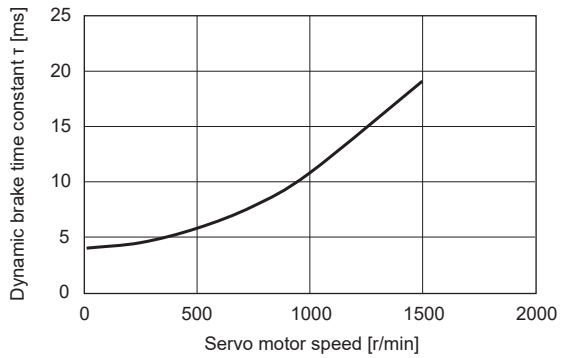

Servo motor	Servo amplifier	Waveform
HK-RT103W	MR-J5-100_ *1	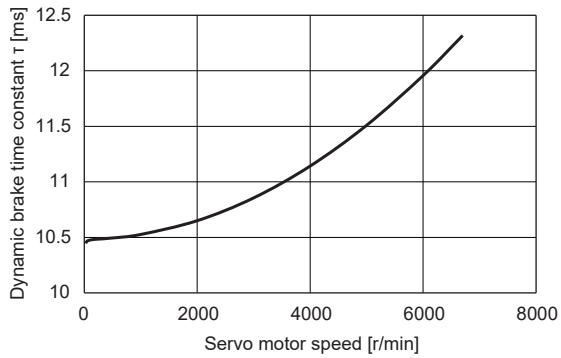
	MR-J5-200_	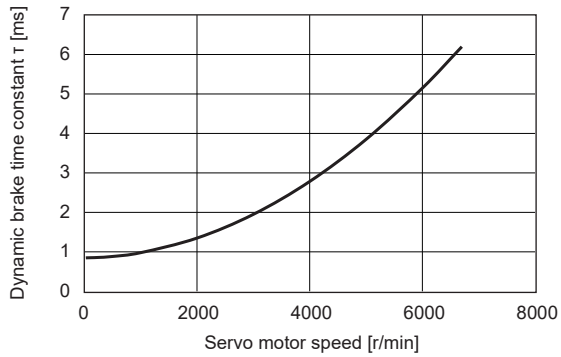
HK-RT153W	MR-J5-200_	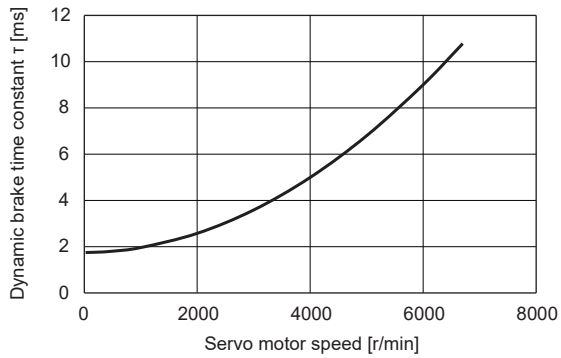
	MR-J5-500_	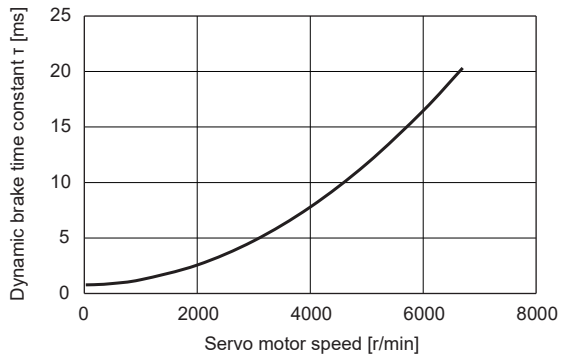

Servo motor	Servo amplifier	Waveform
HK-RT203W	MR-J5-200_ MR-J5-350_	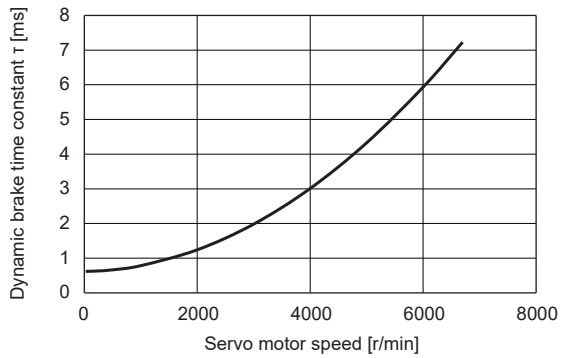
HK-RT353W	MR-J5-350_	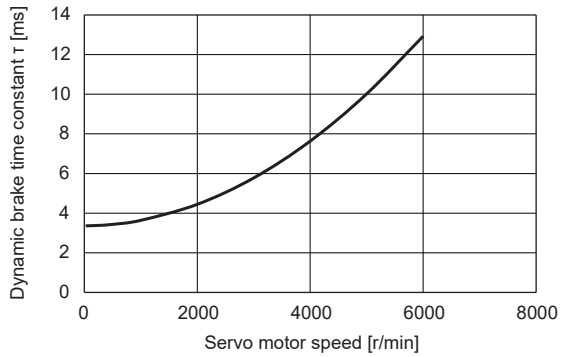
	MR-J5-500_	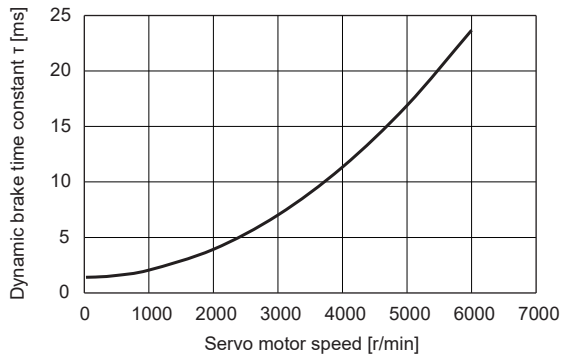

Servo motor	Servo amplifier	Waveform
HK-RT503W	MR-J5-500_	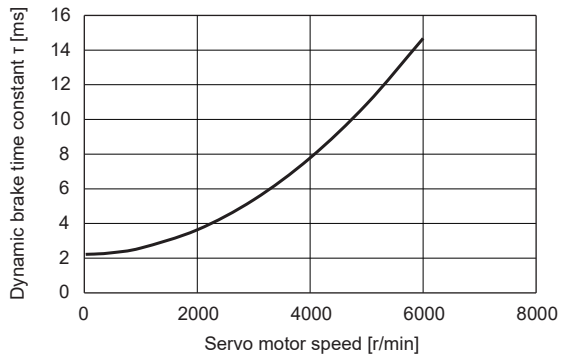
	MR-J5-700_	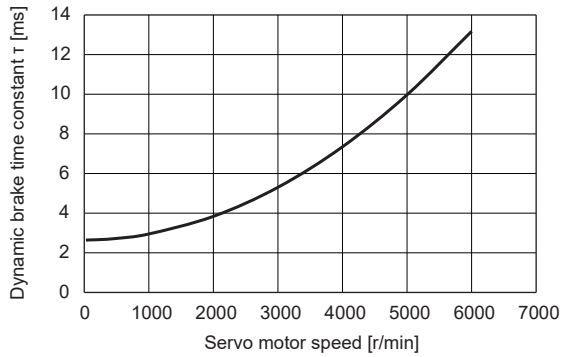
HK-RT703W	MR-J5-700_	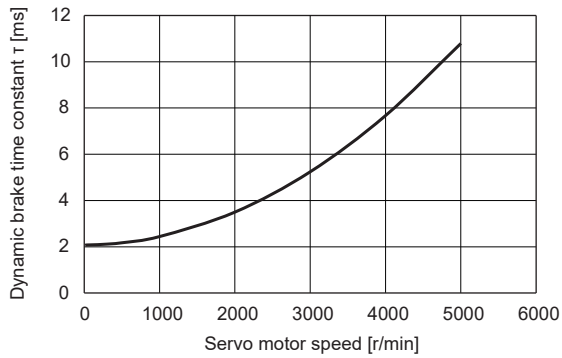

*1 The dynamic brake time constant is longer than when the HG-RR103 and MR-J4-200_ are used in combination. To obtain the dynamic brake time constant equivalent to the combination of the HG-RR103 and MR-J4-200_, use the HK-RT103W and MR-J5-200_ in combination.

■400 V class servo amplifier

Servo motor	Servo amplifier	Waveform
HK-KT053W	MR-J5-60_4_ MR-J5-100_4_	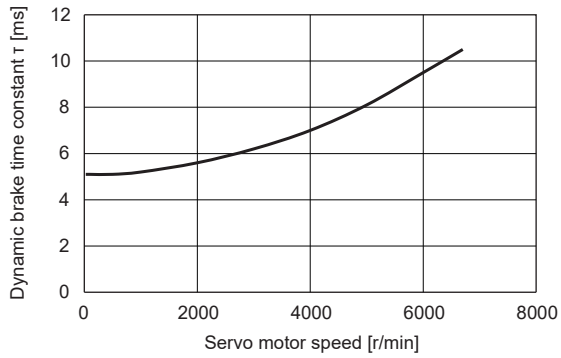
HK-KT13W	MR-J5-60_4_ MR-J5-100_4_	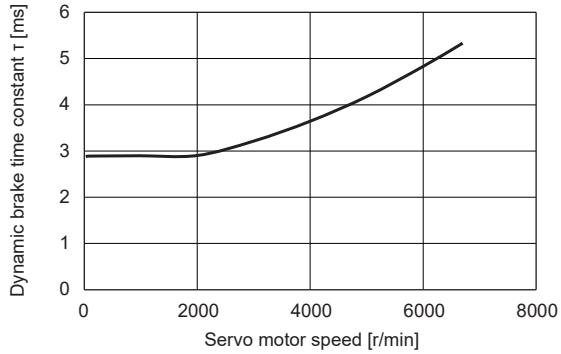
HK-KT1M3W	MR-J5-60_4_ MR-J5-100_4_	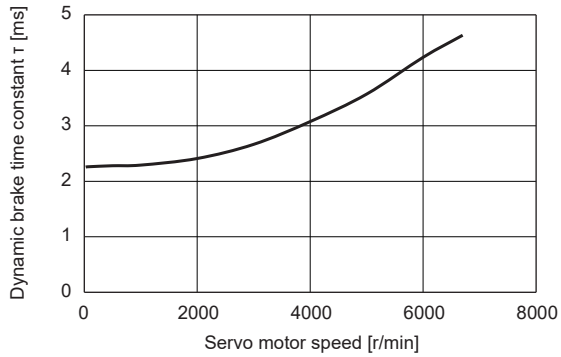

Servo motor	Servo amplifier	Waveform
HK-KT434W	MR-J5-60_4_ MR-J5-100_4_	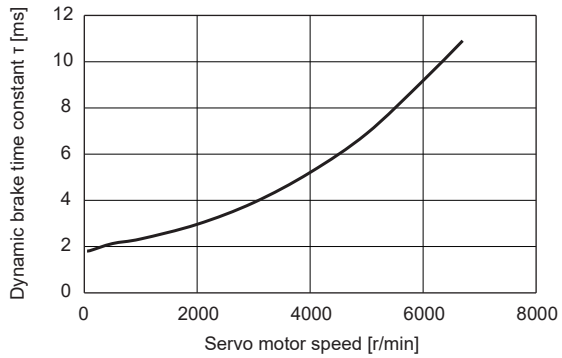
	MR-J5-200_4_	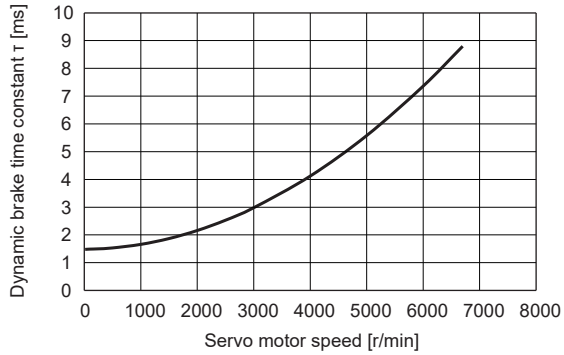

Servo motor	Servo amplifier	Waveform
HK-KT634W	MR-J5-100_4_	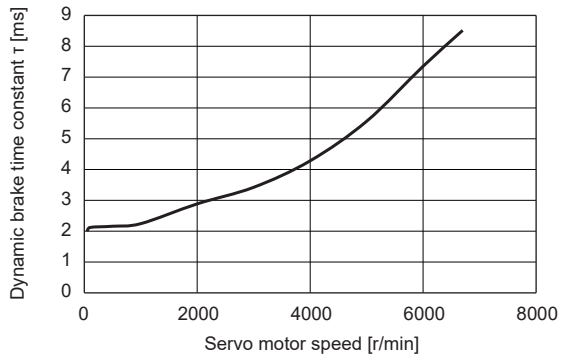
	MR-J5-200_4_	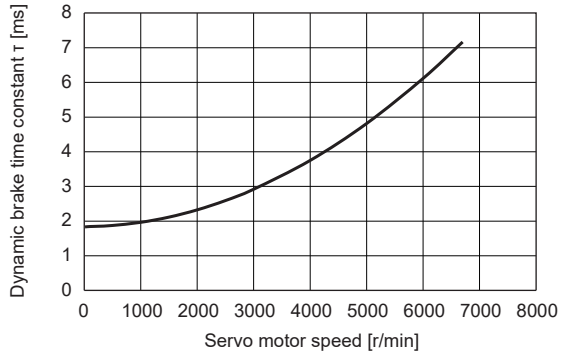
	MR-J5-350_4_	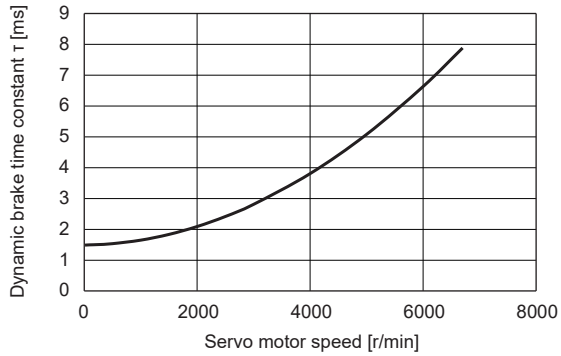

Servo motor	Servo amplifier	Waveform
HK-KT7M34W	MR-J5-100_4_	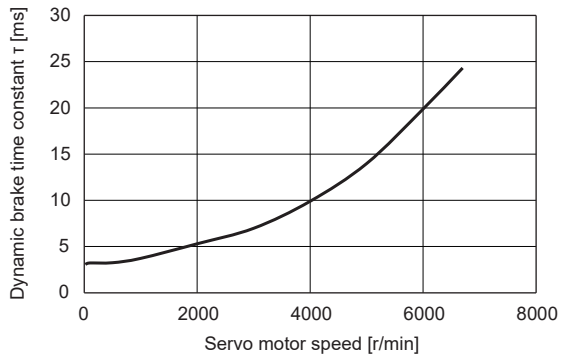
	MR-J5-200_4_	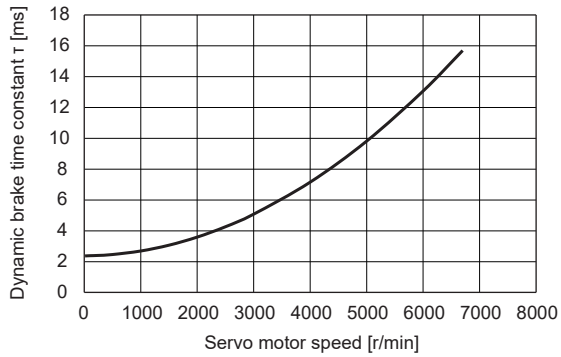
	MR-J5-350_4_	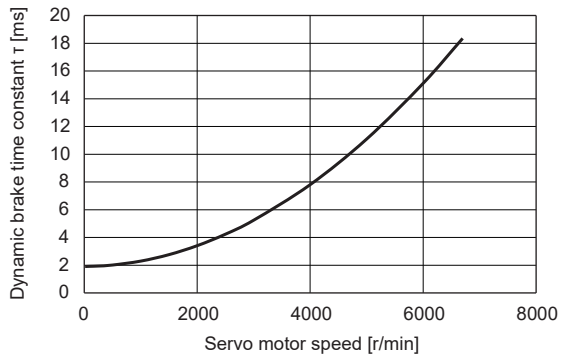

Servo motor	Servo amplifier	Waveform
HK-KT1034W	MR-J5-100_4_	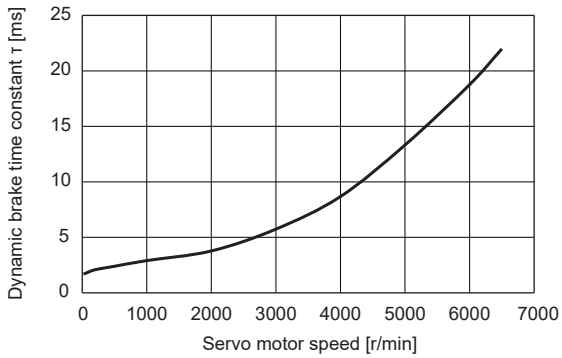
	MR-J5-200_4_	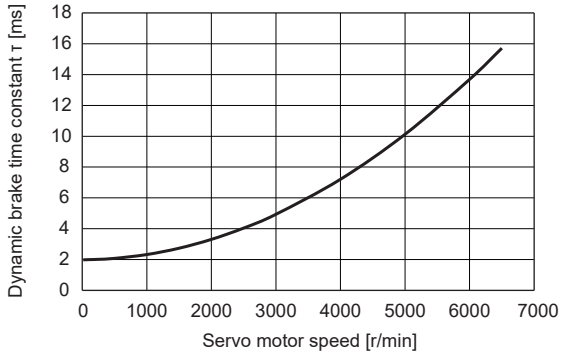
	MR-J5-350_4_	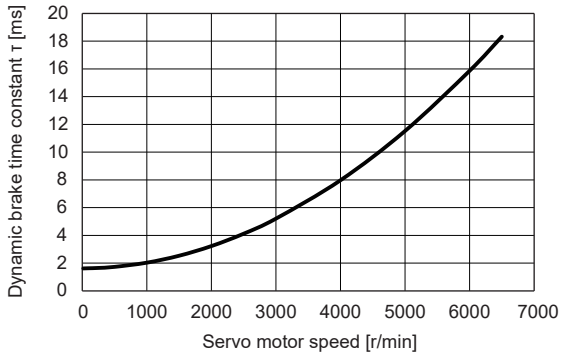

Servo motor	Servo amplifier	Waveform
HK-KT634UW	MR-J5-60_4_ MR-J5-100_4_	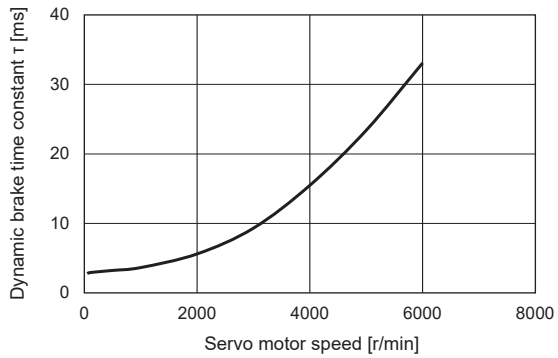
	MR-J5-200_4_	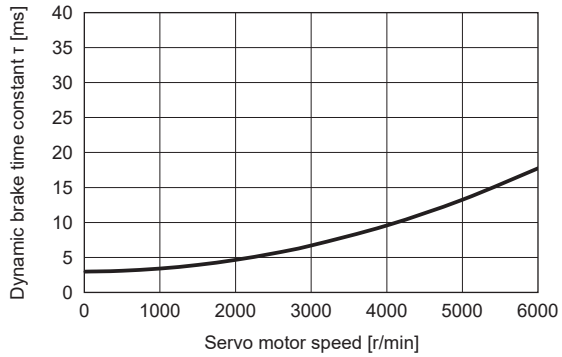

Servo motor	Servo amplifier	Waveform
HK-KT1034UW	MR-J5-100_4_	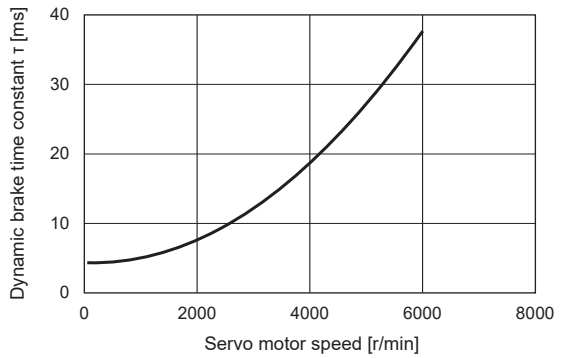
	MR-J5-200_4_	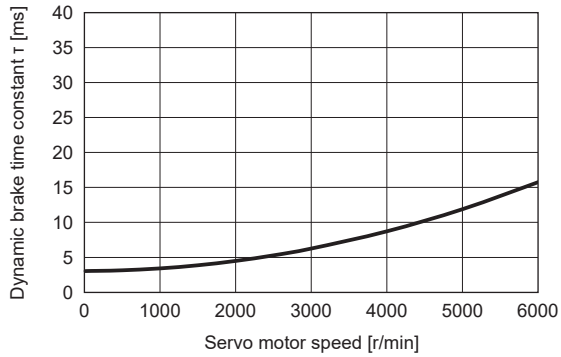
	MR-J5-350_4_	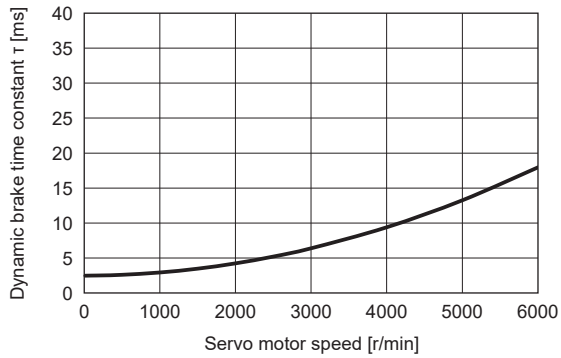

Servo motor	Servo amplifier	Waveform
HK-KT1534W	MR-J5-200_4_	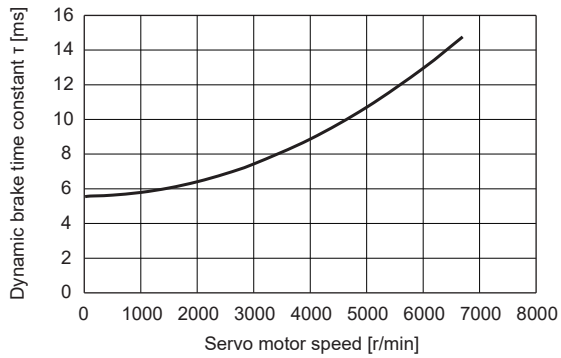
	MR-J5-350_4_	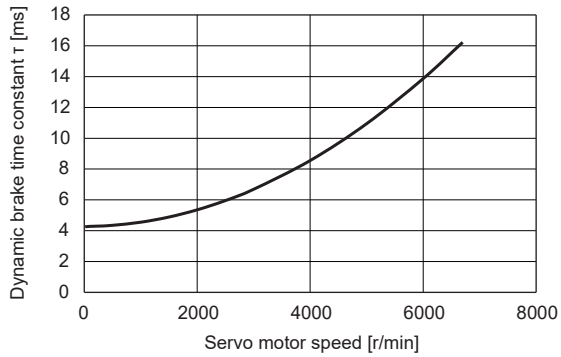
HK-KT2034W	MR-J5-200_4_	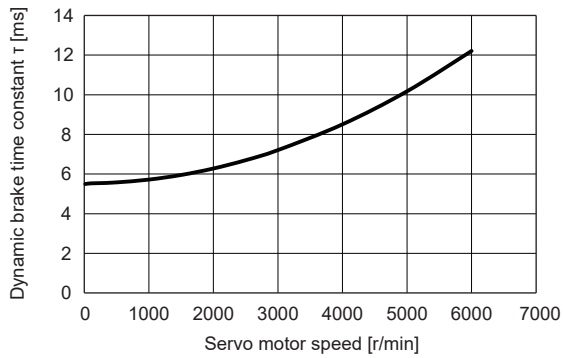
	MR-J5-350_4_	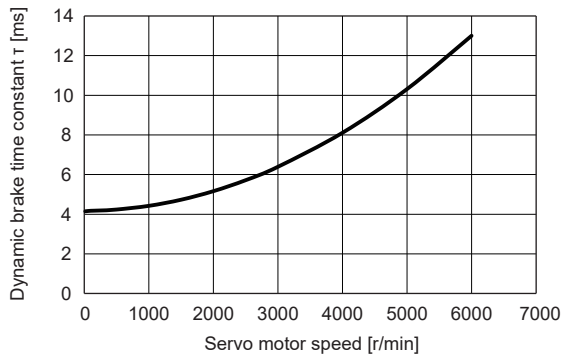

Servo motor	Servo amplifier	Waveform
HK-KT2024W	MR-J5-200_4_	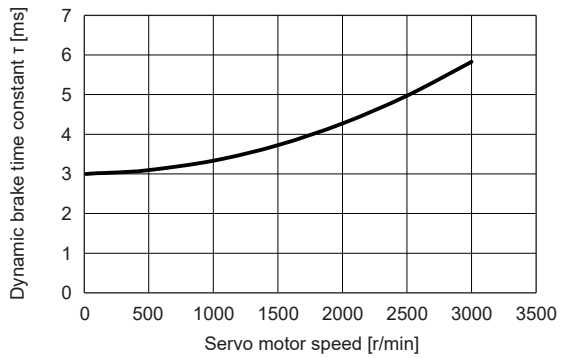
	MR-J5-350_4_	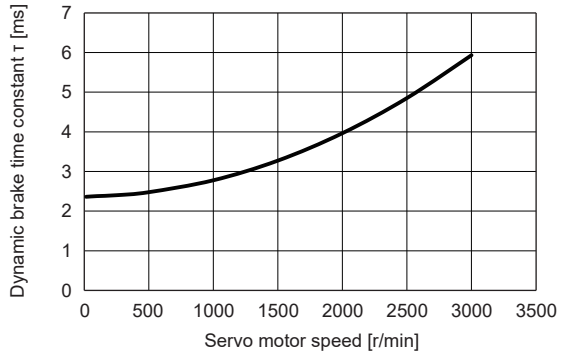
HK-ST524W	MR-J5-60_4_ MR-J5-100_4_	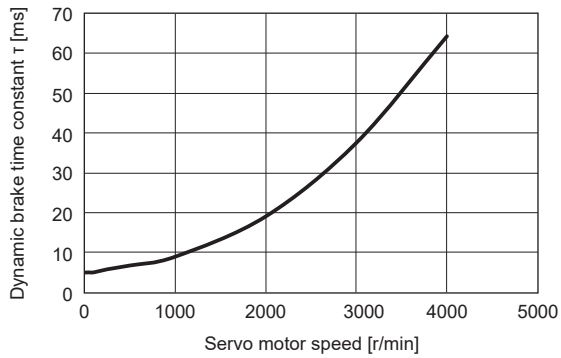
	MR-J5-200_4_	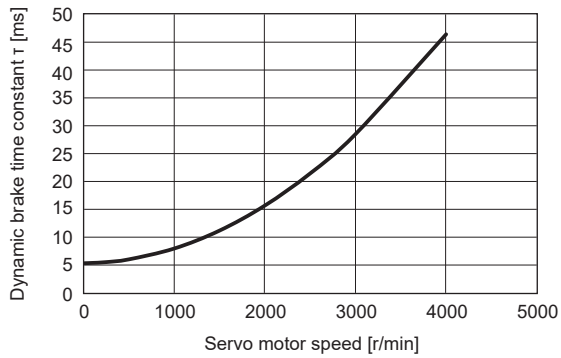

Servo motor	Servo amplifier	Waveform
HK-ST1024W	MR-J5-100_4_	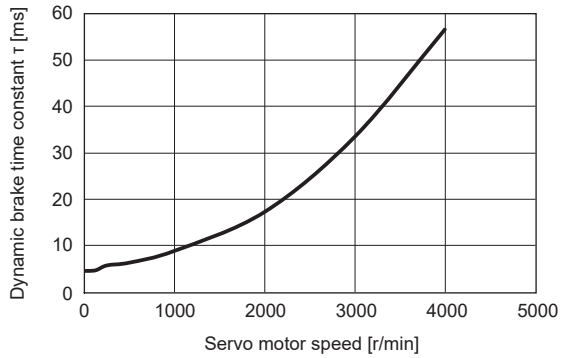
	MR-J5-200_4_	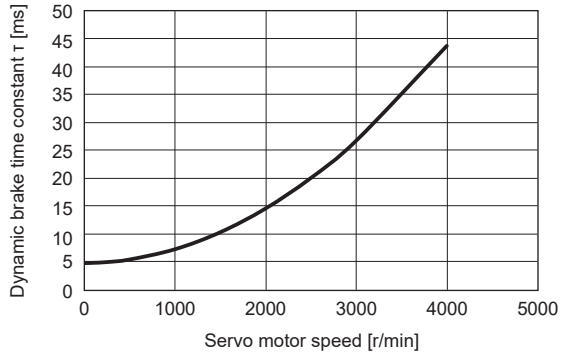
	MR-J5-350_4_	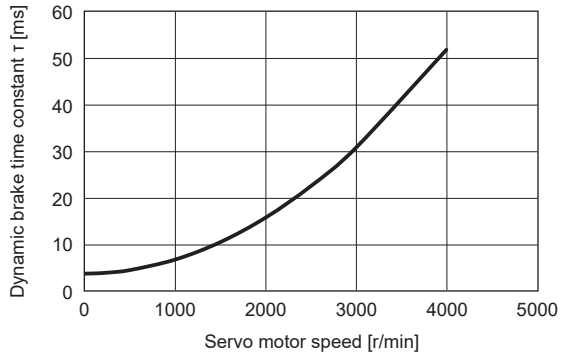

Servo motor	Servo amplifier	Waveform
HK-ST1724W	MR-J5-200_4_	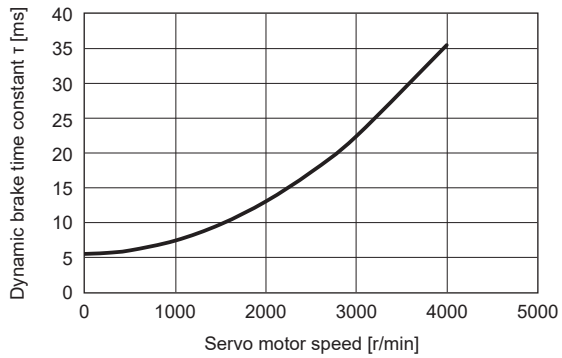
	MR-J5-350_4_	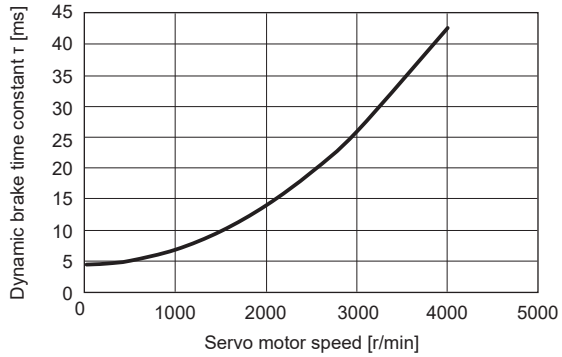
	MR-J5-500_4_	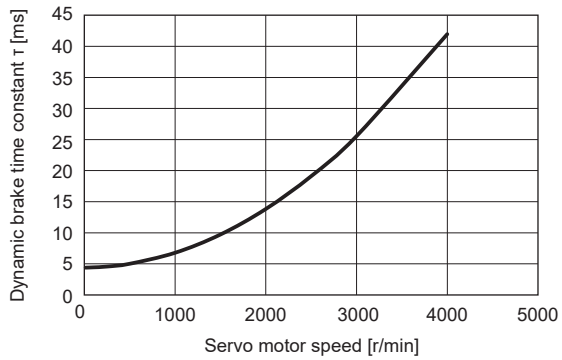

Servo motor	Servo amplifier	Waveform
HK-ST2024AW	MR-J5-200_4_	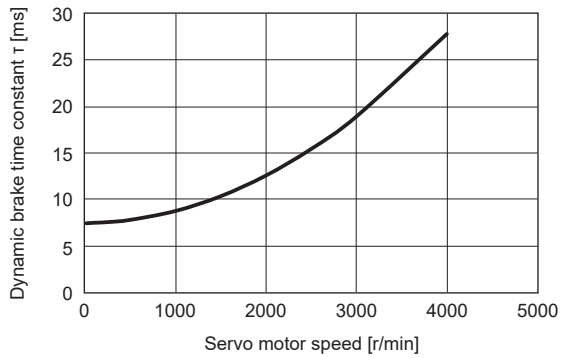
	MR-J5-350_4_	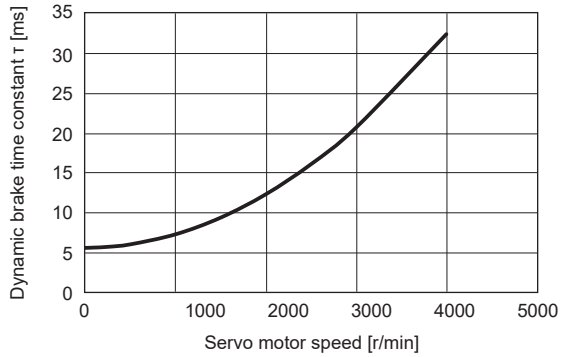
	MR-J5-500_4_	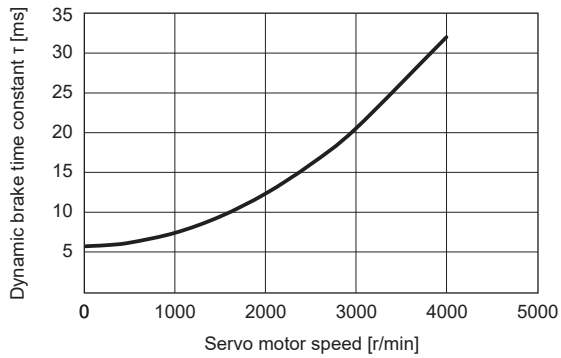

Servo motor	Servo amplifier	Waveform
HK-ST3024W	MR-J5-350_4_	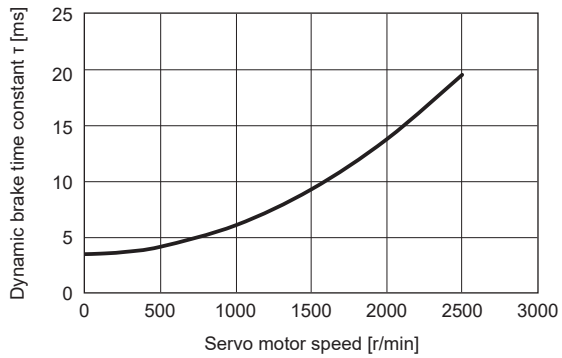
	MR-J5-500_4_ MR-J5-700_4_	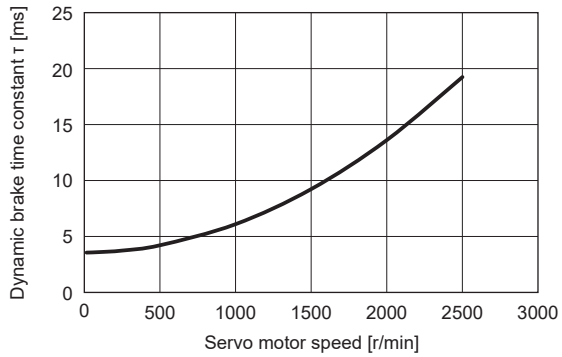
HK-ST3534W	MR-J5-350_4_	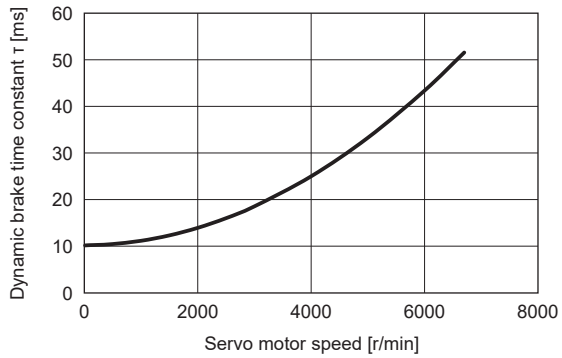
	MR-J5-500_4_	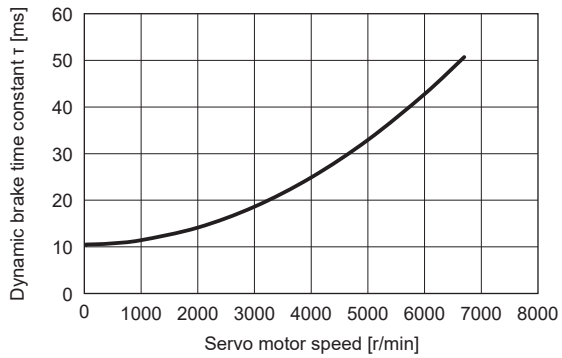

Servo motor	Servo amplifier	Waveform
HK-ST2024W	MR-J5-200_4_	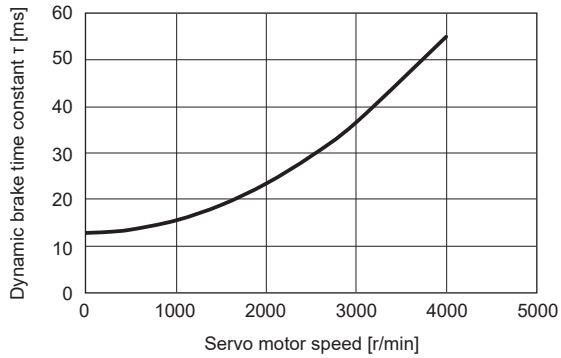
	MR-J5-350_4_	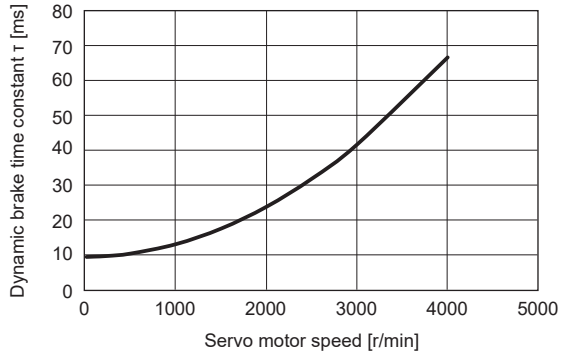
	MR-J5-500_4_	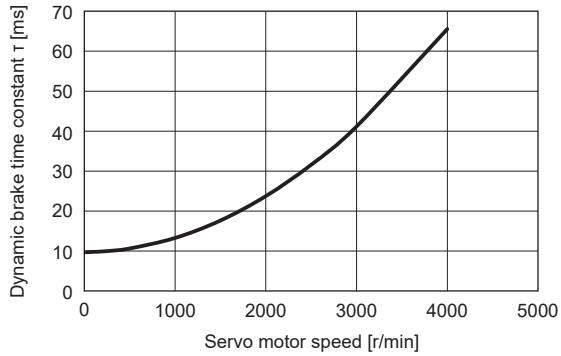

Servo motor	Servo amplifier	Waveform
HK-ST3524W	MR-J5-350_4_	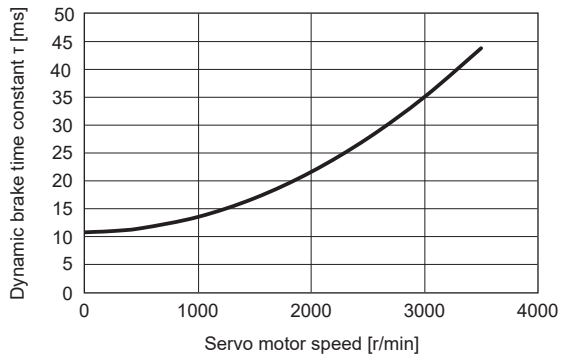
	MR-J5-500_4_ MR-J5-700_4_	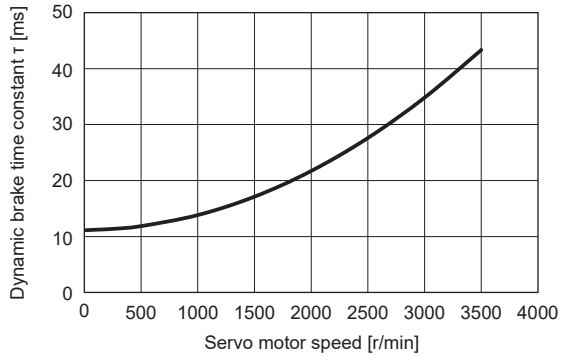
HK-ST5024W	MR-J5-500_4_ MR-J5-700_4_	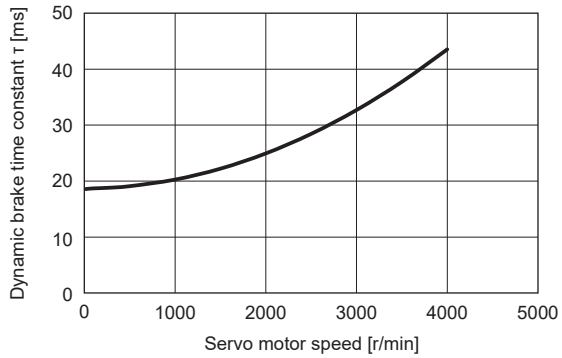
HK-ST5034W	MR-J5-500_4_ MR-J5-700_4_	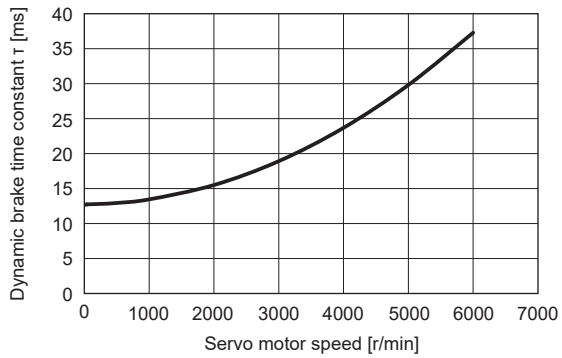

Servo motor	Servo amplifier	Waveform
HK-ST7024W	MR-J5-700_4_	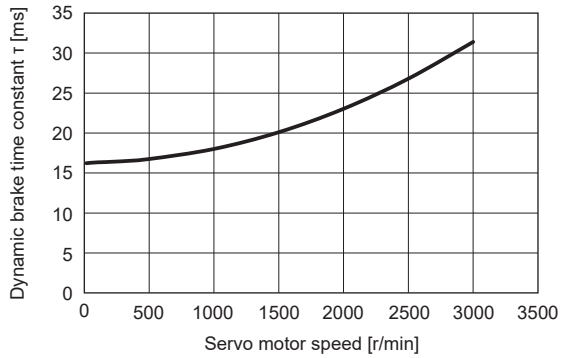
HK-RT1034W	MR-J5-100_4_	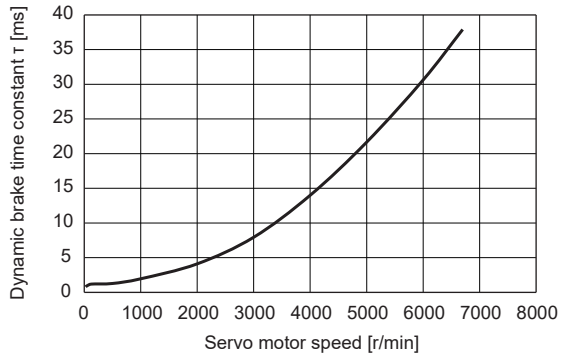
	MR-J5-200_4_	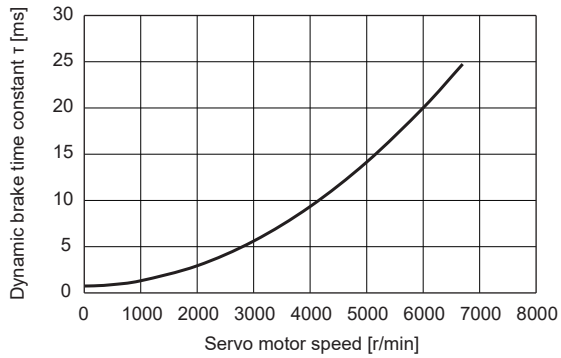

Servo motor	Servo amplifier	Waveform
HK-RT1534W	MR-J5-200_4_	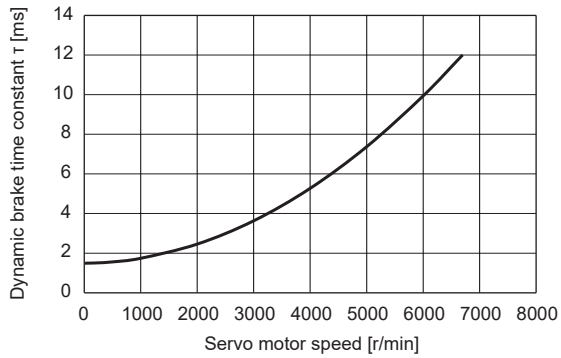
	MR-J5-350_4_	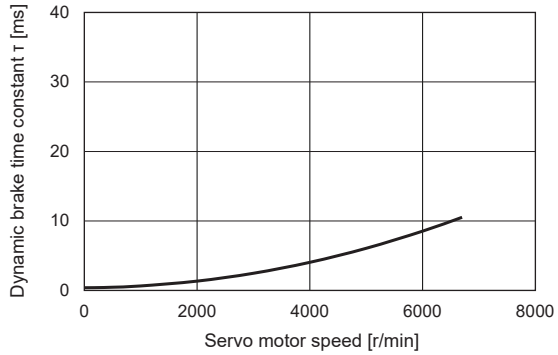
	MR-J5-500_4_	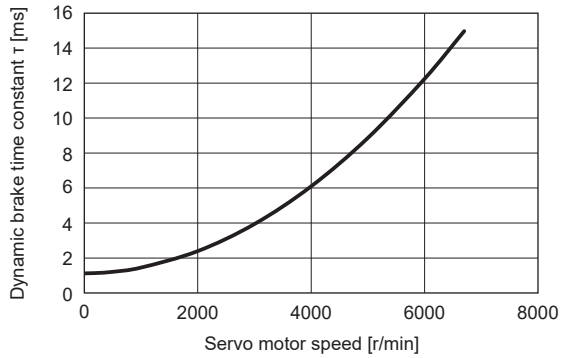

Servo motor	Servo amplifier	Waveform
HK-RT2034W	MR-J5-200_4_	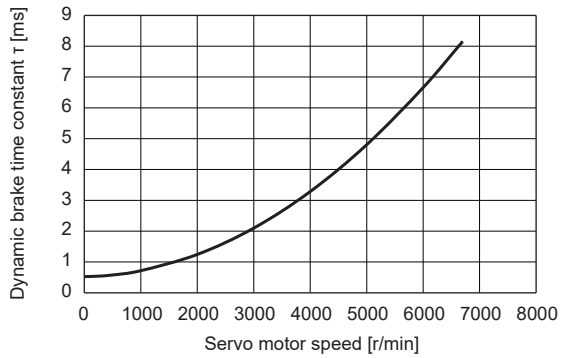
	MR-J5-350_4_	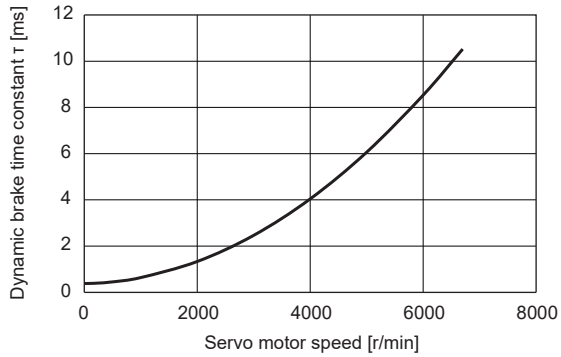
HK-RT3534W	MR-J5-350_4_	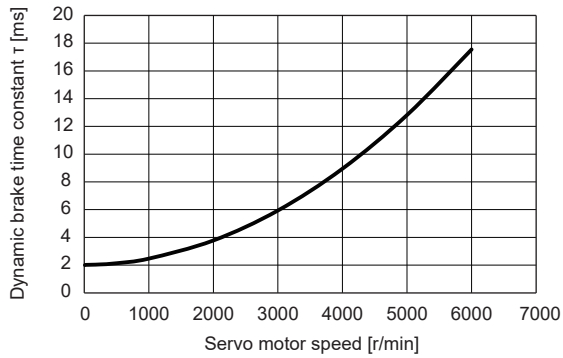
	MR-J5-500_4_	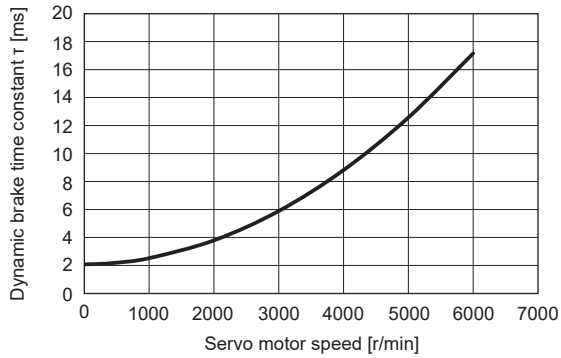

Servo motor	Servo amplifier	Waveform
HK-RT5034W	MR-J5-500_4_ MR-J5-700_4_	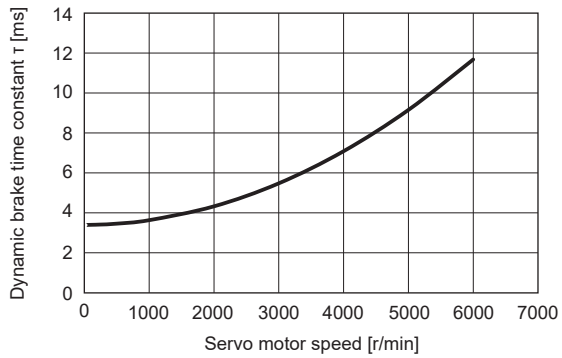
HK-RT7034W	MR-J5-700_4_	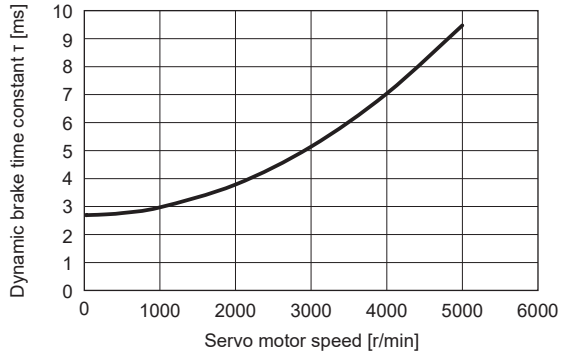

Permissible load to motor inertia when the dynamic brake is used

Use the dynamic brake under the load to motor inertia ratio indicated in the following table. If the ratio is higher than this value, the dynamic brake may burn. If the ratio exceeds the value, contact your local sales office.

The values of the permissible load to motor inertia ratio in the table are the values at the maximum speed of the servo motor.

■200 V class servo amplifier

Series	Model	Permissible load to motor inertia ratio [multiplier]
HK-KT	HK-KT053W	34
	HK-KT13W	34
	HK-KT13UW	10
	HK-KT1M3W	25
	HK-KT23W	23 (when 6000 r/min or less: 28)
	HK-KT23UW	10
	HK-KT43W	23
	HK-KT43UW	10
	HK-KT63W	30
	HK-KT63UW	20 (when 3000 r/min or less: 30)
	HK-KT7M3W	20
	HK-KT7M3UW	10
	HK-KT103W	20
	HK-KT103UW	20
	HK-KT153W	30
	HK-KT203W	30
	HK-KT202W	30
	HK-KT434W	30
	HK-KT634W	30
	HK-KT7M34W	20
	HK-KT1034W	30
	HK-KT1534W	30
	HK-KT2034W	30
	HK-KT2024W	30
HK-MT	HK-MT053W	35
	HK-MT13W	35
	HK-MT1M3W	35
	HK-MT23W	35
	HK-MT43W	35
	HK-MT63W	35
	HK-MT73W	35
	HK-MT103W	35
	HK-MT053VW	24
	HK-MT13VW	24
	HK-MT1M3VW	24
	HK-MT23VW	24
	HK-MT43VW	24
	HK-MT63VW	30
	HK-MT73VW	30
	HK-MT103VW	30

Series	Model	Permissible load to motor inertia ratio [multiplier]
HK-ST	HK-ST52W	15 (when 3000 r/min or less: 19)
	HK-ST7M2UW	31
	HK-ST102W	23
	HK-ST172W	30
	HK-ST172UW	36
	HK-ST202AW	30
	HK-ST202W	15 (when 3000 r/min or less: 20)
	HK-ST302W	30
	HK-ST352W	12 (when 3000 r/min or less: 22)
	HK-ST353W	10 (when 3000 r/min or less: 30)
	HK-ST502W	10
	HK-ST503W	10 (when 3000 r/min or less: 30)
	HK-ST702W	8
	HK-ST524W	15
	HK-ST1024W	40
	HK-ST1724W	40
	HK-ST2024AW	20
	HK-ST2024W	38
	HK-ST3024W	30
	HK-ST3524W	44
	HK-ST5024W	23
	HK-ST7024W	22
HK-RT	HK-RT103W	63
	HK-RT153W	63
	HK-RT203W	29
	HK-RT353W	29
	HK-RT503W	29
	HK-RT703W	42

■400 V class servo amplifier

Series	Model	Permissible load to motor inertia ratio [multiplier]
HK-KT	HK-KT053W	20
	HK-KT13W	20
	HK-KT1M3W	20
	HK-KT434W	30
	HK-KT634W	20 (when 3000 r/min or less: 30)
	HK-KT634UW	20 (when 3000 r/min or less: 30)
	HK-KT7M34W	7 (when 3000 r/min or less: 20)
	HK-KT1034W	7 (when 3000 r/min or less: 30)
	HK-KT1034UW	25 (when 3000 r/min or less: 30)
	HK-KT1534W	10 (when 3000 r/min or less: 30)
	HK-KT2034W	10 (when 3000 r/min or less: 30)
	HK-KT2024W	30
HK-ST	HK-ST524W	4 (when 2000 r/min or less: 19)
	HK-ST1024W	4 (when 2000 r/min or less: 23)
	HK-ST1724W	4 (when 2000 r/min or less: 24)
	HK-ST2024AW	8 (when 2000 r/min or less: 24)
	HK-ST2024W	4 (when 2000 r/min or less: 20)
	HK-ST3024W	30
	HK-ST3524W	5 (when 2000 r/min or less: 22)
	HK-ST3534W	10 (when 3000 r/min or less: 30)
	HK-ST5024W	4 (when 2000 r/min or less: 22)
	HK-ST5034W	10 (when 3000 r/min or less: 21)
	HK-ST7024W	8 (when 2000 r/min or less: 22)
HK-RT	HK-RT1034W	18
	HK-RT1534W	60
	HK-RT2034W	29
	HK-RT3534W	20
	HK-RT5034W	13
	HK-RT7034W	16

5.4 Cable flex life

The flex life of the cables is shown below. This graph shows calculated values and not guaranteed values. The cable flex life factors in conductor and insulation breakage. The values are calculated from fully disconnected cables and do not take into account wear from electrical characteristics, sheath abrasion, or insulation deterioration. Allow for a deviation in these values.

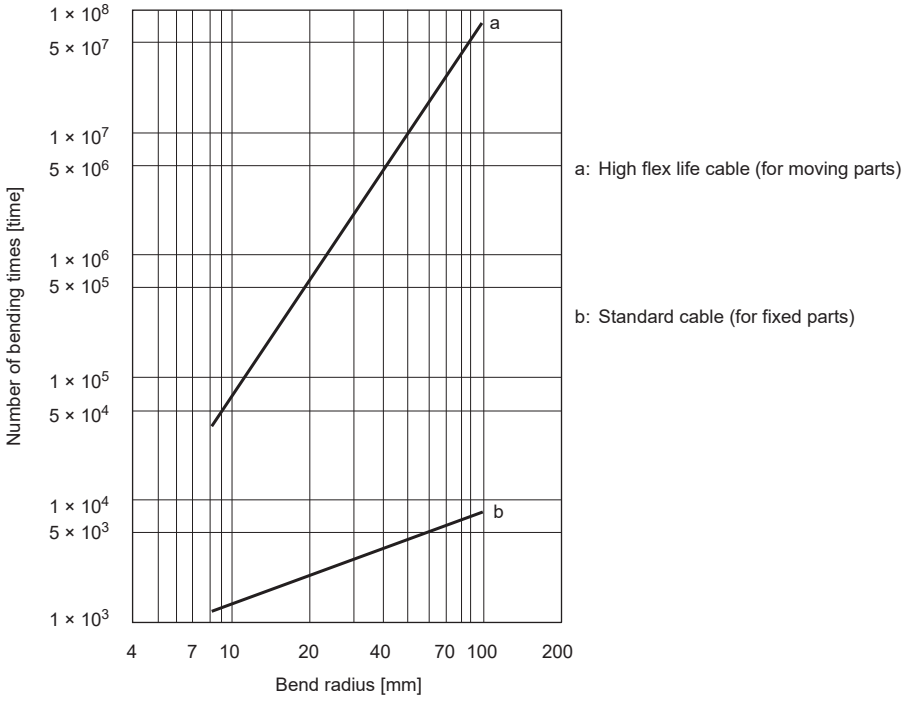

5.5 Inrush currents at power-on of main circuit and control circuit

A molded-case circuit breaker and magnetic contactor may fail or malfunction due to an inrush current flowing through the servo amplifier's power lines (input lines) at power on. Therefore, use products with the specifications described on the following page.

☞ Page 329 Molded-case circuit breakers, fuses, magnetic contactors

When circuit protectors are used, it is recommended that the inertia delay type, which is not tripped by an inrush current, be used.

200 V class

The following shows the inrush currents (reference data) that will flow when 240 V AC is applied. Even when a 1-phase 200 V AC power supply is used with MR-J5-10_ to MR-J5-200_, the inrush currents of the main circuit power supply will be the same.

■1-axis servo amplifier

Servo amplifier	Inrush currents (A_{0-P})	
	Main circuit power supply (L1/L2/L3)	Control circuit power supply (L11/L21)
MR-J5-10_ MR-J5-20_ MR-J5-40_ MR-J5-60_	17 A (attenuated to approx. 3 A in 20 ms)	20 A to 30 A (attenuated to approx. 1 A in 20 ms)
MR-J5-70_ MR-J5-100_	17 A (attenuated to approx. 7 A in 20 ms)	
MR-J5-200_	24 A (attenuated to approx. 11 A in 20 ms)	
MR-J5-350_	85 A (attenuated to approx. 10 A in 20 ms)	
MR-J5-500_	42 A (attenuated to approx. 20 A in 20 ms)	34 A (attenuated to approx. 2 A in 20 ms)
MR-J5-700_	85 A (attenuated to approx. 20 A in 30 ms)	

■Multi-axis servo amplifier

Servo amplifier	Inrush currents (A_{0-P})	
	Main circuit power supply (L1/L2/L3)	Control circuit power supply (L11/L21)
MR-J5W2-22_ MR-J5W2-44_	23 A (attenuated to approx. 9 A in 20 ms)	20 A to 35 A (attenuated to approx. 3 A in 20 ms)
MR-J5W2-77_ MR-J5W2-1010_	36 A (attenuated to approx. 13 A in 20 ms)	
MR-J5W3-222_ MR-J5W3-444_	23 A (attenuated to approx. 6 A in 20 ms)	

400 V class

The following shows the inrush currents (reference data) that will flow when 480 V AC is applied.

Servo amplifier	Inrush currents (A_{0-P})	
	Main circuit power supply (L1/L2/L3)	Control circuit power supply (L11/L21)
MR-J5-60_4_ MR-J5-100_4_	21 A (attenuated to approx. 4 A in 10 ms)	40 A to 50 A (attenuated to approx. 0 A in 20 ms)
MR-J5-200_4_	26 A (attenuated to approx. 10 A in 10 ms)	
MR-J5-350_4_	78 A (attenuated to approx. 10 A in 10 ms)	
MR-J5-500_4_	50 A (attenuated to approx. 3 A in 20 ms)	20 A to 30 A (attenuated to approx. 0 A in 3 ms)
MR-J5-700_4_	55 A (attenuated to approx. 16 A in 20 ms)	

6 OPTIONS AND PERIPHERAL EQUIPMENT

Precautions

- HIV wires are recommended to wire the servo amplifiers, options, and peripheral equipment. Therefore, the recommended wire sizes may differ from those used for the previous generation servo amplifiers.
- To prevent an electric shock or a fire, correctly wire options and peripheral equipment, etc. in the correct combination.

6.1 Cables/connector sets

Point

The IP rating indicated for cables and connectors is their protection against ingress of dust and water drops when they are connected to a servo amplifier or servo motor. If the IP ratings of the cables, connectors, servo amplifier, and servo motor differ, the overall IP rating is determined by the lowest IP rating of all the components.

Purchase the cable and connector options indicated in this section for this servo amplifier.
Use the cables provided by Mitsubishi Electric and Mitsubishi Electric System & Service Co., Ltd. When fabricating a cable, select a wire suitable for the application. For selection example, NFPA 79 (2018 Edition) in North America demands the use of a listed, certified product that has a thermoset insulator and is compliant with the NEC standard RHH, RHW, RHW-2, XHH, XHHW, or XHHW-2.
For information on options for servo motor power supplies, electromagnetic brakes, servo motor encoders, and load-side encoders, refer to "WIRING OPTION" in the following manual.
Rotary Servo Motor User's Manual (For MR-J5)
For options for linear encoders, refer to "OPTION CABLES/CONNECTOR SETS" in the following manual.
MR-J5 Partner's Encoder User's Manual
Refer to "WIRING OPTION" in the following manual for options for direct drive motor power supplies and options for encoders.
Direct Drive Motor User's Manual

Combinations of cables/connector sets

MR-J5-_G_ (excluding MR-J5-_G_-HS_)

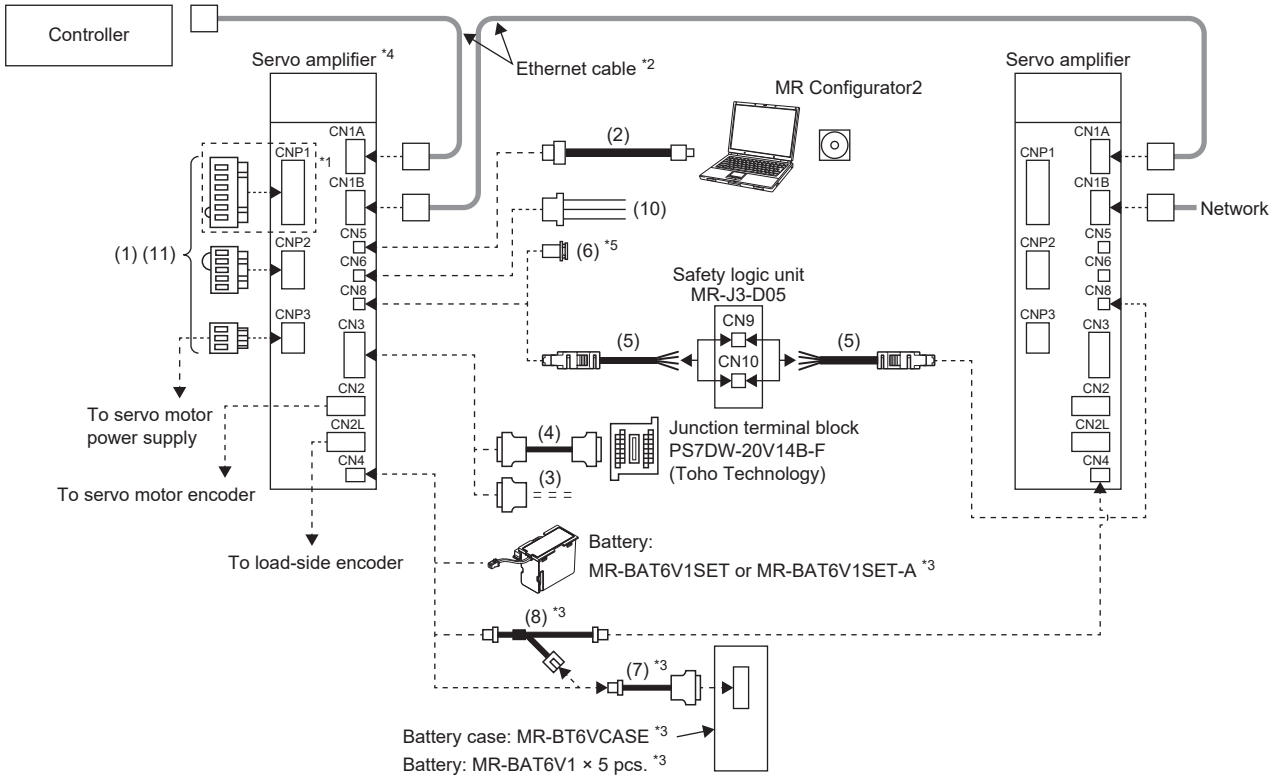

*1 For MR-J5-500_ and MR-J5-700_ servo amplifiers, the CNP1 connector is divided into two: CNP1A connector (L1/L2/L3) and CNP1B connector (N1/P3/P4).

*2 Refer to the following page for information on Ethernet cable specifications.
☞ Page 266 Ethernet cable [G]

*3 This part is required to configure an absolute position detection system by using a direct drive motor. For configuration of an absolute position detection system, refer to the following.
☞ Page 584 Absolute position detection system [G] [B]

*4 The shape and position of the power connector differ from the description depending on the capacity of the servo amplifier. Refer to the following for details.
☞ Page 144 DIMENSIONS

*5 If not using the STO function, attach the short-circuit connector.

MR-J5-_G_-HS_

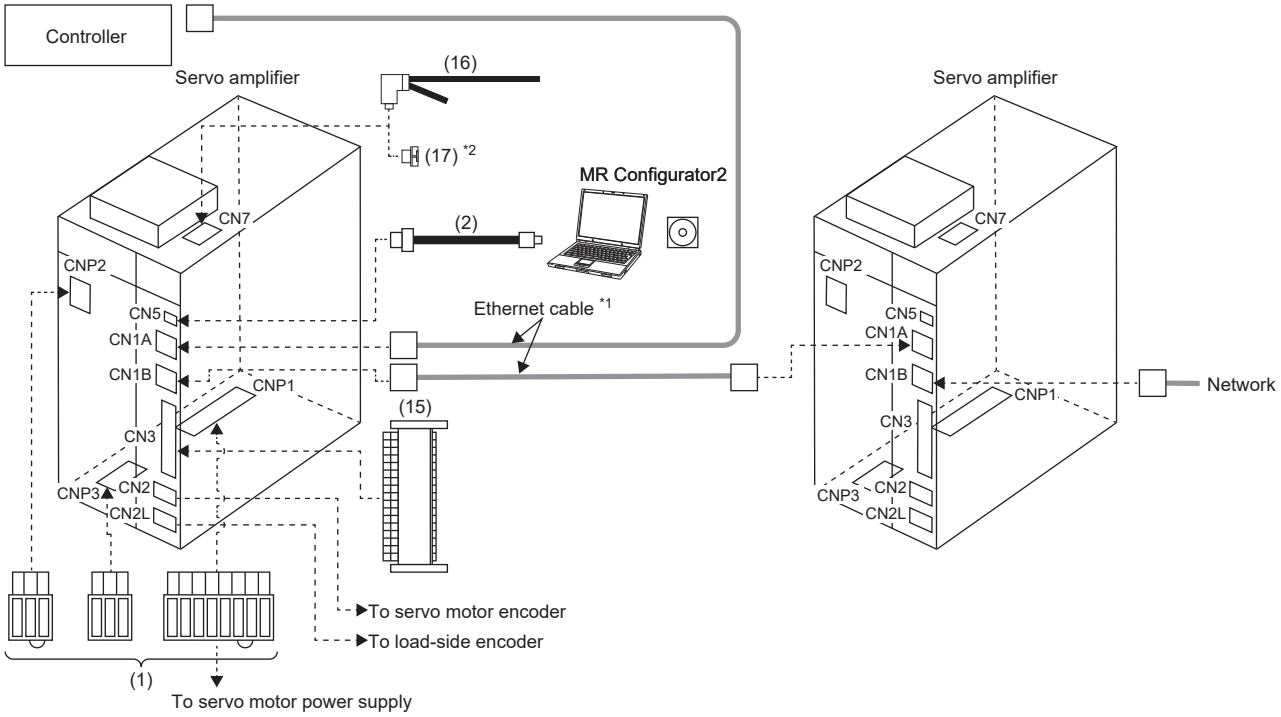

*1 Refer to the following page for information on Ethernet cable specifications.
☞ Page 266 Ethernet cable [G]

*2 If not using the CN7 connector, cover them with a cap.

MR-J5W_-_G_

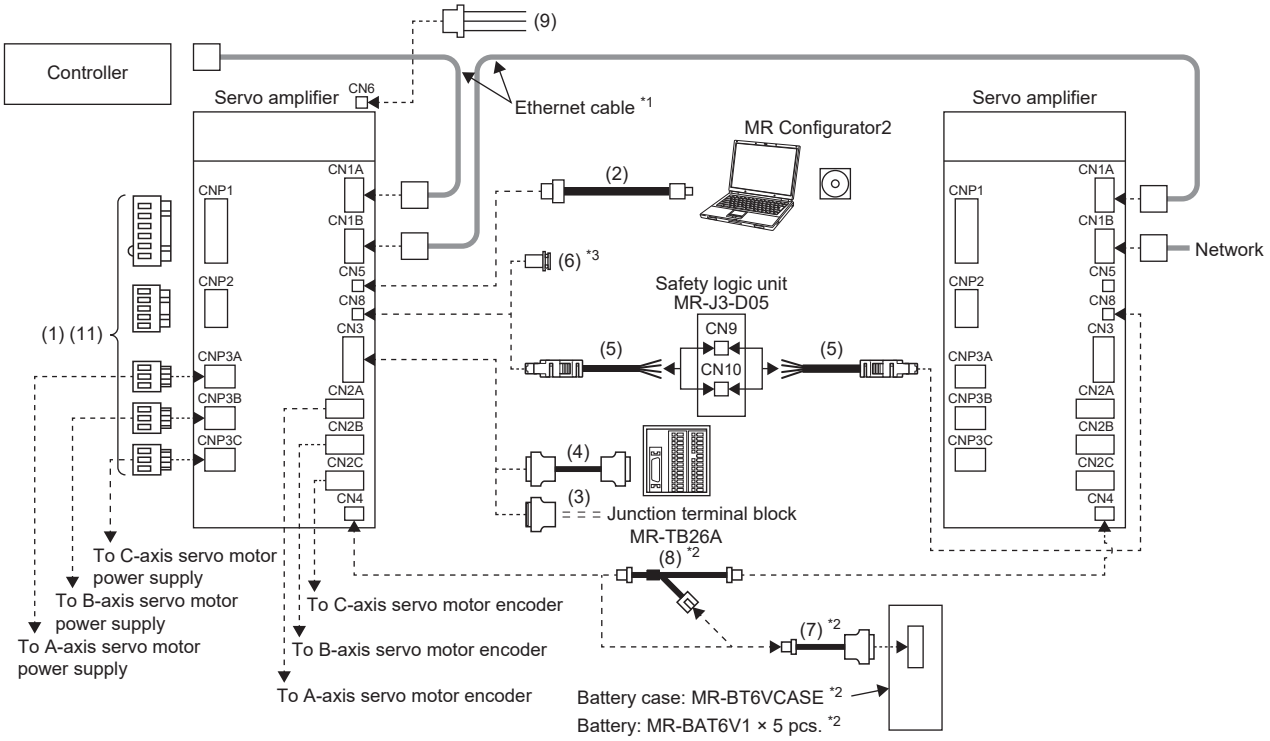

*1 Refer to the following page for information on Ethernet cable specifications.
☞ Page 266 Ethernet cable [G]

*2 This part is required to configure an absolute position detection system by using a direct drive motor. For configuration of an absolute position detection system, refer to the following.
☞ Page 584 Absolute position detection system [G] [B]

*3 If not using the STO function, attach the short-circuit connector.

MR-J5-_B_

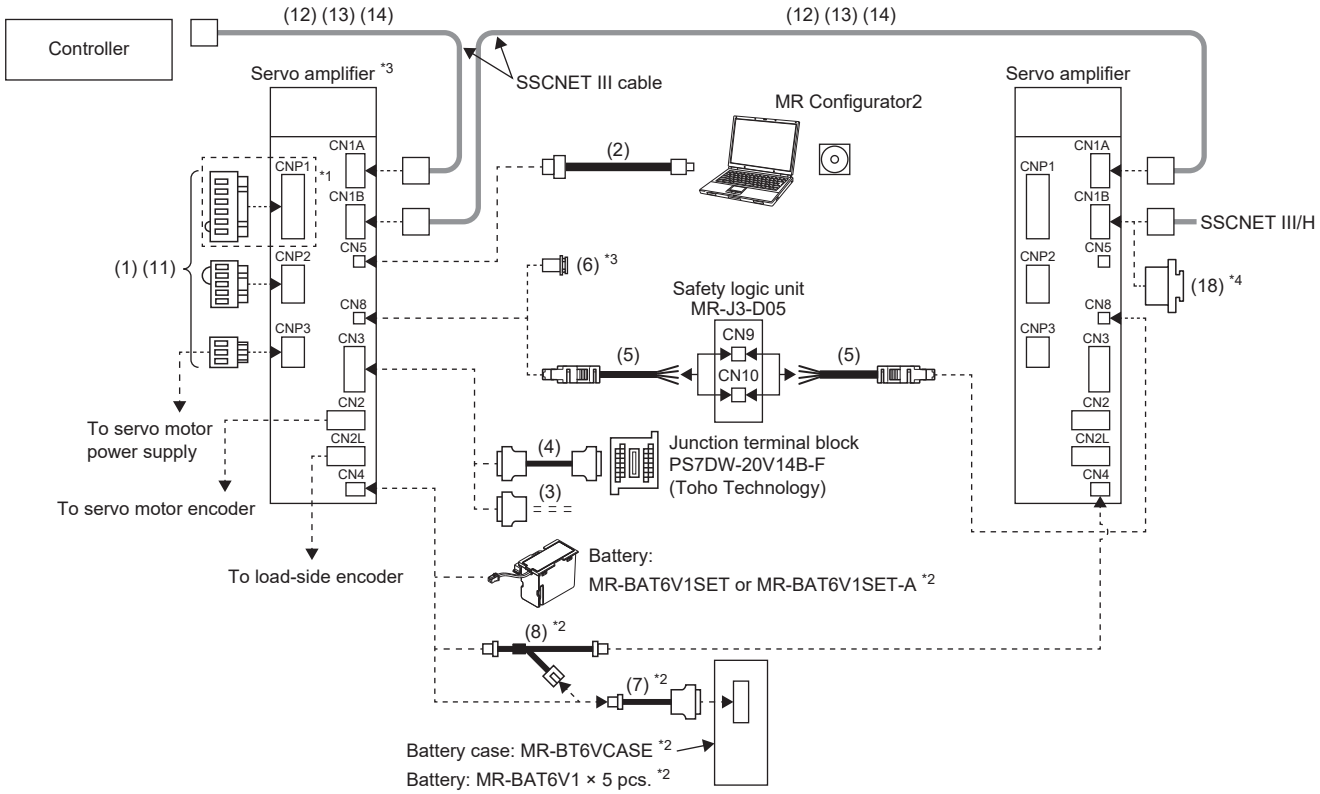

*1 For MR-J5-500_ and MR-J5-700_ servo amplifiers, the CNP1 connector is divided into two: CNP1A connector (L1/L2/L3) and CNP1B connector (N1/P3/P4).

*2 This part is required to configure an absolute position detection system by using a direct drive motor. For configuration of an absolute position detection system, refer to the following.
☞ Page 584 Absolute position detection system [G] [B]

*3 The shape and position of the power connector differ from the description depending on the capacity of the servo amplifier. Refer to the following for details.
☞ Page 144 DIMENSIONS

*4 If not using the CN1B connector, cover them with a cap.

*5 If not using the STO function, attach the short-circuit connector.

MR-J5W_-_B_

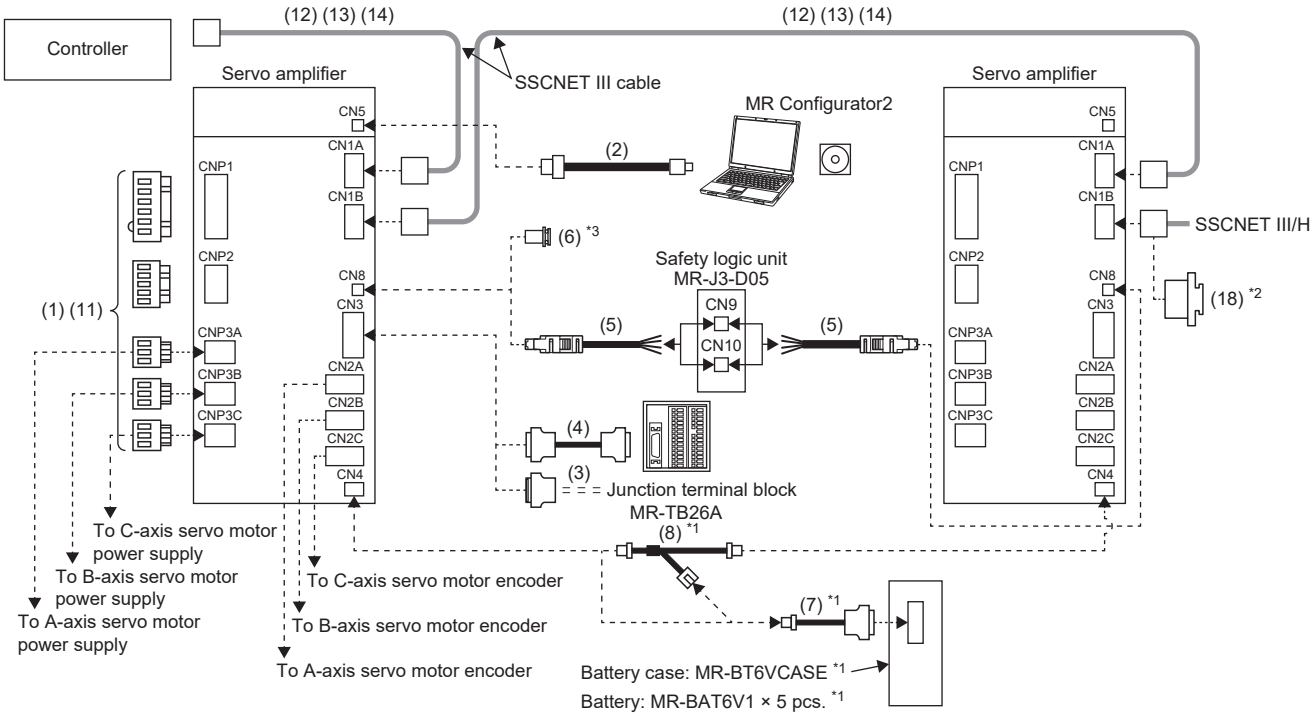

*1 This part is required to configure an absolute position detection system by using a direct drive motor. For configuration of an absolute position detection system, refer to the following.

☞ Page 584 Absolute position detection system [G] [B]

*2 If not using the CN1B connector, cover them with a cap.

*3 If not using the STO function, attach the short-circuit connector.

MR-J5-_A_

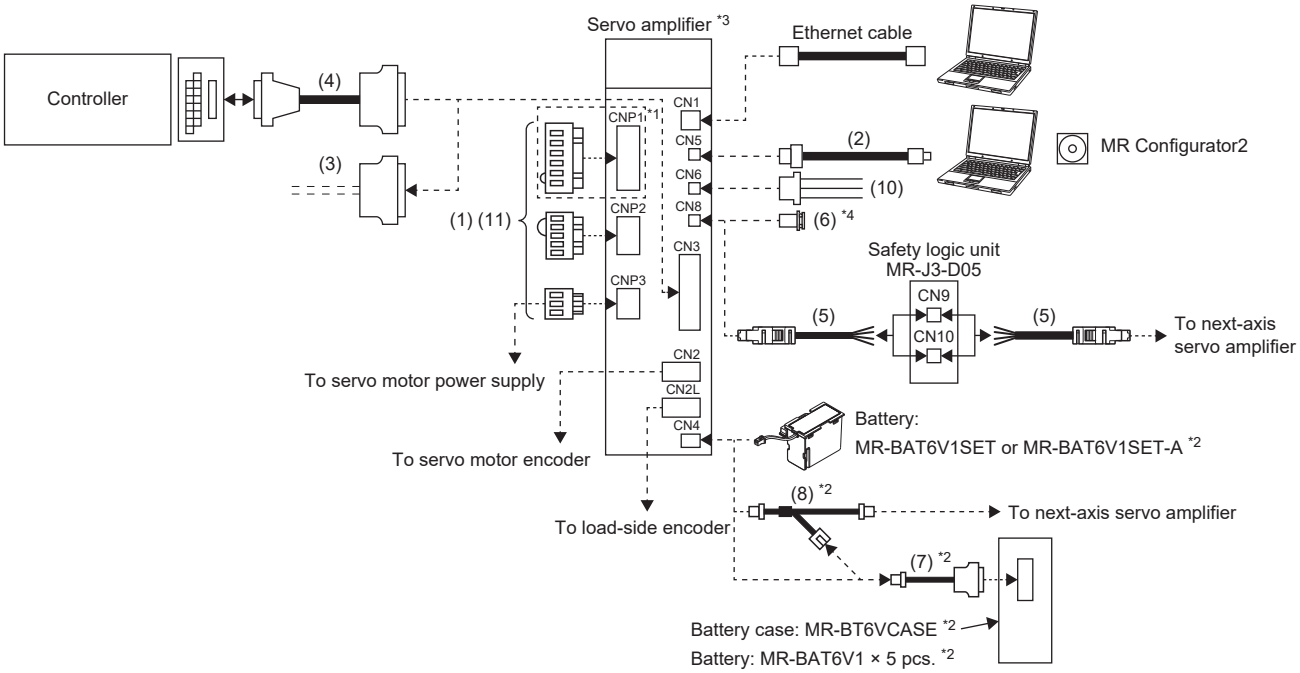

*1 For MR-J5-500_ and MR-J5-700_ servo amplifiers, the CNP1 connector is divided into two: CNP1A connector (L1/L2/L3) and CNP1B connector (N1/P3/P4).

*2 This part is required to configure an absolute position detection system by using a direct drive motor. For configuration of an absolute position detection system, refer to the following.
☞ Page 584 Absolute position detection system [A]

*3 The shape and position of the power connector differ from the description depending on the capacity of the servo amplifier. Refer to the following for details.
☞ Page 144 DIMENSIONS

*4 If not using the STO function, attach the short-circuit connector.

List of cables/connector sets

No.	Product name	Model	Description			Remark
(1)	Servo amplifier power connector set	—	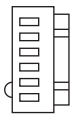 CNP1 connector 06JFAT-SAXGDK-K7.5 (LA) (JST) Applicable wire size: 0.8 mm^2 to 2.1 mm^2 (18 to 14 AWG) Insulator OD: Up to 3.9 mm	 CNP2 connector 05JFAT-SAXGDK-K5.0 (LA) (JST) Applicable wire size: 0.8 mm^2 to 2.1 mm^2 (18 to 14 AWG) Insulator OD: Up to 3.9 mm	 CNP3 connector 03JFAT-SAXGDK-K7.5 (LA) (JST) Applicable wire size: 0.8 mm^2 to 2.1 mm^2 (18 to 14 AWG) Insulator OD: Up to 3.9 mm	Supplied with 200 V class 1-axis servo amplifiers with a capacity of 1 kW or less
			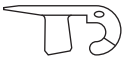 Open tool: J-FAT-OT-K (JST)			
		—	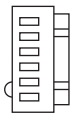 CNP1 connector 06JFAT-SAXGFK-XL (LA) (JST) Applicable wire size: 1.25 mm^2 to 5.5 mm^2 (16 to 10 AWG) Insulator OD: Up to 4.7 mm	 CNP2 connector 05JFAT-SAXGDK-H5.0 (LA) (JST) Applicable wire size: 0.8 mm^2 to 2.1 mm^2 (18 to 14 AWG) Insulator OD: Up to 3.9 mm	 CNP3 connector 03JFAT-SAXGFK-XL (LA) (JST) Applicable wire size: 1.25 mm^2 to 5.5 mm^2 (16 to 10 AWG) Insulator OD: Up to 4.7 mm	Supplied with 200 V class 1-axis servo amplifiers with capacities of 2 kW and 3.5 kW
			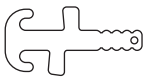 Open tool: J-FAT-OT-EXL (JST)			
		—	 CNP1A connector 03JFAT-SAXGDK-P15 (LA) (JST) Applicable wire size: 0.8 mm^2 to 8.0 mm^2 (18 to 8 AWG) Insulator OD: Up to 7.6 mm	 CNP2 connector 05JFAT-SAXGDK-H5.0 (LA) (JST) Applicable wire size: 0.8 mm^2 to 2.1 mm^2 (18 to 14 AWG) Insulator OD: Up to 3.9 mm	 CNP3 connector 03JFAT-SAZGDK-P15 (LC) (JST) Applicable wire size: 0.8 mm^2 to 8.0 mm^2 (18 to 8 AWG) Insulator OD: Up to 7.6 mm	Supplied with 200 V class 1-axis servo amplifiers with capacities of 5 kW and 7 kW
			 CNP1B connector 03JFAT-SAYGDK-P15 (LB) (JST) Applicable wire size: 0.8 mm^2 to 8.0 mm^2 (18 to 8 AWG) Insulator OD: Up to 7.6 mm			
			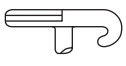 Open tool: J-FAT-OT-P (JST)	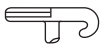 Open tool: J-FAT-OT (N) (JST)	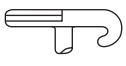 Open tool: J-FAT-OT-P (JST)	

No.	Product name	Model	Description			Remark
(1)	Servo amplifier power connector set	—	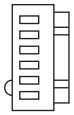 CNP1 connector 06JFAT-SAXGDK-K7.5 (LB) (JST) Applicable wire size: 0.8 mm^2 to 2.1 mm^2 (18 to 14 AWG) Insulator OD: Up to 3.9 mm	 CNP2 connector 05JFAT-SAXGDK-K5.0 (LA) (JST) Applicable wire size: 0.8 mm^2 to 2.1 mm^2 (18 to 14 AWG) Insulator OD: Up to 3.9 mm	 CNP3 connector 04JFAT-SAGG-G-KK (JST) Applicable wire size: 0.8 mm^2 to 2.1 mm^2 (18 to 14 AWG) Insulator OD: Up to 3.9 mm	Supplied with multi-axis servo amplifiers of 400 W or less
			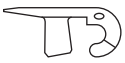 Open tool: J-FAT-OT-K (JST)			
		—	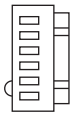 CNP1 connector 06JFAT-SAXGFK-XL (LB) (JST) Applicable wire size: 1.25 mm^2 to 5.5 mm^2 (16 to 10 AWG) Insulator OD: Up to 4.7 mm	 CNP2 connector 05JFAT-SAXGDK-H5.0 (LA) (JST) Applicable wire size: 0.8 mm^2 to 2.1 mm^2 (18 to 14 AWG) Insulator OD: Up to 3.9 mm	 CNP3 connector 04JFAT-SAGG-G-KK (JST) Applicable wire size: 0.8 mm^2 to 2.1 mm^2 (18 to 14 AWG) Insulator OD: Up to 3.9 mm	Supplied with multi-axis servo amplifiers of 750 W or more
			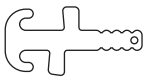 Open tool: J-FAT-OT-EXL (JST)			
		—	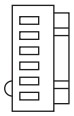 CNP1 connector 06JFAT-SAXGDKHT10.5 (LA) (JST) Applicable wire size: 0.8 mm^2 to 2.1 mm^2 (18 to 14 AWG) Insulator OD: Up to 3.9 mm	 CNP2 connector 05JFAT-SAXGDKHT7.5 (LA) (JST) Applicable wire size: 0.8 mm^2 to 2.1 mm^2 (18 to 14 AWG) Insulator OD: Up to 3.9 mm	 CNP3 connector 03JFAT-SAXGDKHT10.5 (LA) (JST) Applicable wire size: 0.8 mm^2 to 2.1 mm^2 (18 to 14 AWG) Insulator OD: Up to 3.9 mm	Supplied with 400 V class 1-axis servo amplifiers with a capacity of 3.5 kW or less
			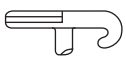 Open tool: J-FAT-OT-XL (JST)			
		—	 CNP1 connector 831-1108/MNC (WAGO) Applicable wire size: 0.5 mm^2 to 10 mm^2 (20 to 8 AWG) Insulator OD: Up to 6.6 mm	 CNP2 connector 831-1103/MNB (WAGO) Applicable wire size: 0.5 mm^2 to 10 mm^2 (20 to 8 AWG) Insulator OD: Up to 6.6 mm	 CNP3 connector 831-1103/MNA (WAGO) Applicable wire size: 0.5 mm^2 to 10 mm^2 (20 to 8 AWG) Insulator OD: Up to 6.6 mm	Supplied with 400 V class 1-axis servo amplifiers with capacities of 5 kW and 7 kW

No.	Product name	Model	Description	Remark
(2)	USB cable	MR-J3USBCBL3M cable length: 3 m	 (a) CN5 connector: mini-B connector (5 pins) (b) Personal computer connector: Connector A	For connection with PC-AT compatible personal computer
(3)	Connector set	MR-CCN1	 Connector: 10120-3000PE Shell kit: 10320-52F0-008 (3M or equivalent)	For MR-J5-_G_ For MR-J5-_B_
		MR-J3CN1	 Connector: 10150-3000PE Shell kit: 10350-52F0-008 (3M or equivalent)	For MR-J5-_A_
		MR-J2CMP2	 Connector: 10126-3000PE Shell kit: 10326-52F0-008 (3M or equivalent)	For MR-J5W_-_G_ Quantity: 1 For MR-J5W_-_B_
		MR-ECN1	 Connector: 10126-3000PE Shell kit: 10326-52F0-008 (3M or equivalent)	For MR-J5W_-_G_ Quantity: 20 For MR-J5W_-_B_
(4)	Junction terminal block cable	MR-J2HBUS_M Cable length: 0.5 m, 1 m, 5 m	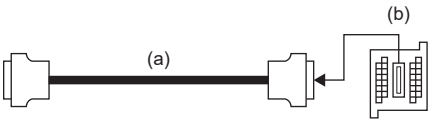 (a) MR-J2HBUS_M (b) PS7DW-20V14B-F (Toho Technology) Junction terminal block PS7DW-20V14B-F is not available as an option. To use the junction terminal block, option MR-J2HBUS_M is required.	For MR-J5-_G_ For MR-J5-_B_
		MR-J2M-CN1TBL_M Cable length: 0.5 m, 1 m	 (a) Junction terminal block connector Connector: D7950-B500FL (3M) (b) CN3 connector Connector: 10150-6000EL Shell kit: 10350-3210-000 (3M or equivalent)	For MR-J5-_A_
		MR-TBNATBL_M Cable length: 0.5 m, 1 m	 (a) Junction terminal block connector Connector: 10126-6000EL Shell kit: 10326-3210-000 (3M or equivalent) (b) CN3 connector Connector: 10126-6000EL Shell kit: 10326-3210-000 (3M or equivalent)	For MR-J5W_-_G_ For MR-J5W_-_B_
(5)	STO cable	MR-D05UDL3M-B	 (a) Connector set: 2069250-1 (TE Connectivity)	Connection cable for the CN8 connector
(6)	Short-circuit connector	—		Supplied with servo amplifiers

No.	Product name	Model	Description	Remark
(7)	Battery cable	MR-BT6V1CBL_M Cable length: 0.3 m, 1 m	 (a) Housing: PAP-02V-O Contact: SPHD-001G-P0.5 (JST) (b) Connector: 10114-3000PE Shell kit: 10314-52F0-008 (3M or equivalent)	For connection with battery unit ☞ Page 311 Battery
(8)	Junction battery cable	MR-BT6V2CBL_M Cable length: 0.3 m, 1 m	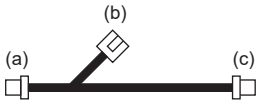 (a) Housing: PAP-02V-O Contact: SPHD-001G-P0.5 (JST) (b) Housing: PALR-02VF-O Contact: SPAL-001GU-P0.5 (JST) (c) Housing: PAP-02V-O Contact: SPHD-001G-P0.5 (JST)	☞ Page 311 Battery
(9)	Monitor cable	MR-J3CN6CBL1M	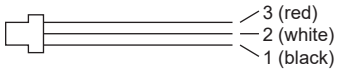 CN6 connector Housing: 51004-0300 Contact: 50011-8100 (Molex)	For MR-J5W_-_G_
(10)		MR-ACN6CBL1M	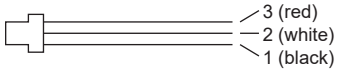 CN6 connector Housing: SHR-03V-S Contact: SSH-003T-P0.2-H (JST)	For MR-J5-_G_ For MR-J5-_A_
(11)	Daisy chain power connector	MR-J5CNP12-J1	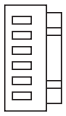 CNP1 connector 06JFAT-SAXGDK-KC7.5 (LA) (JST) Applicable wire size: 0.8 mm^2 to 5.5 mm^2 (18 to 10 AWG) Insulator OD: Up to 4.7 mm 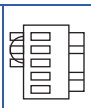 CNP2 connector 05JFAT-SAXGDK-KC5.0 (LA) (JST) Applicable wire size: 0.8 mm^2 to 2.1 mm^2 (18 to 14 AWG) Insulator OD: Up to 3.9 mm	Used for connecting the simple converter when a 1-axis servo amplifier of 1 kW or less or a multi-axis servo amplifier of 400 W or less is used. ☞ Page 285 MR-CM simple converter
		MR-J5CNP12-J2	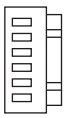 CNP1 connector 06JFAT-SAXGFK-XLC (LA) (JST) Applicable wire size: 1.25 mm^2 to 5.5 mm^2 (16 to 10 AWG) Insulator OD: Up to 4.7 mm CNP2 connector 05JFAT-SAXGDK-HC5.0 (LA) (JST) Applicable wire size: 0.8 mm^2 to 2.1 mm^2 (18 to 14 AWG) Insulator OD: Up to 3.9 mm	Used for connecting the simple converter when a 1-axis servo amplifier of 2 kW or less or a 2-axis servo amplifier of 750 W or more is used. ☞ Page 285 MR-CM simple converter

No.	Product name	Model	Description	Remark
(12)	SSCNET III cable	MR-J3BUS_M Cable length: 0.15 m to 3 m ☞ Page 267 SSCNET III cable [B]	(a) (b) (a) (b) Connector: PF-2D103 (JAE)	Standard cord inside cabinet
(13)		MR-J3BUS_M-A Cable length: 5 m to 20 m ☞ Page 267 SSCNET III cable [B]		Standard cable outside cabinet
(14)		MR-J3BUS_M-B Cable length: 30 m to 50 m ☞ Page 267 SSCNET III cable [B]	(a) (b) (a) (b) Connector: CF-2D103-S (JAE)	Long distance cable
(15)	Connector set	—	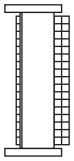 CN3 connector DFMC 1, 5/16-ST-3, 5-LRBK (Phoenix Contact) or equivalent Applicable wire size: 0.2 mm^2 to 1.5 mm^2 (24 to 16 AWG)	Supplied with the MR-J5-_G_-HS_ servo amplifiers.
(16)	Output cable for analog monitor and A/B/Z-phase pulse	MR-AHSCN7CBL2M10M ☞ Page 265 MR-AHSCN7CBL2M10M Output cable for analog monitor and A/B/Z-phase pulse [G]	 CN7 connector: IX30G-B-10S-CVL1 (7.0) (Hirose Electric)	For MR-J5-_G_-HS_
(17)	Connector cap	—		Supplied with servo amplifiers
(18)	Connector cap	—		Supplied with servo amplifiers

MR-D05UDL3M-B STO cable

This cable is for connecting an external device to the CN8 connector.

Cable model	Cable length	Cable OD *1	Application
MR-D05UDL3M-B	3 m	5.7 mm	Connection cable for the CN8 connector

*1 Standard OD. The maximum OD is about 10 % greater for dimensions without tolerances.

Configuration diagram

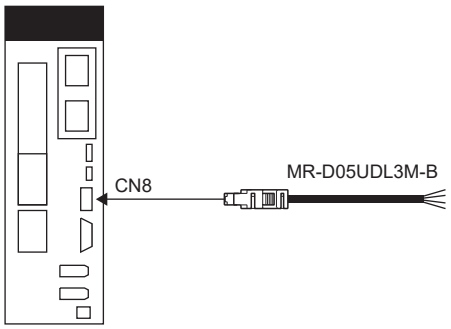

Internal wiring diagram

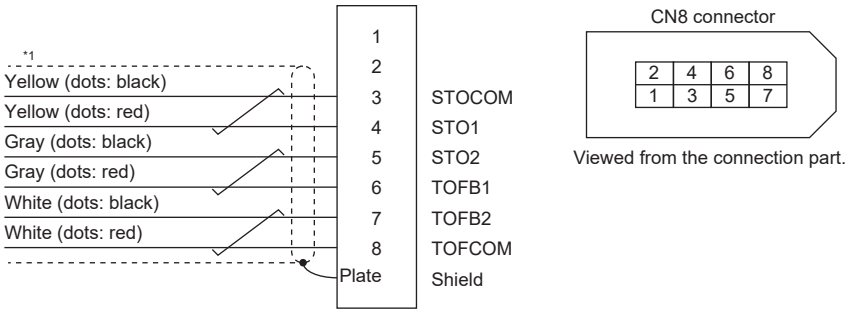

*1 Do not use the two core wires with orange insulators (with red or black dots).

MR-AHSCN7CBL2M10M Output cable for analog monitor and A/B/Z-phase pulse [G]

This cable is for connecting an external device to the CN7 connector.

Cable model	Cable length	Cable OD	Application
MR-AHSCN7CBL2M10M	A/B/Z-phase pulse output: 10 m Analog monitor: 2 m	A/B/Z-phase pulse output: 6.3 mm Analog monitor: 5.3 mm	Connection cable for the CN7 connector

Configuration diagram

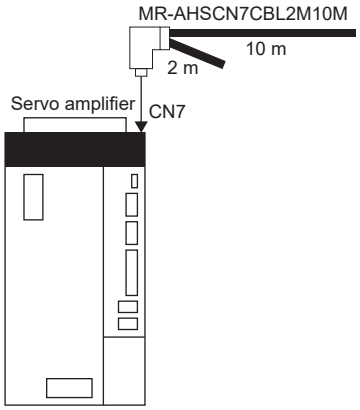

Internal wiring diagram

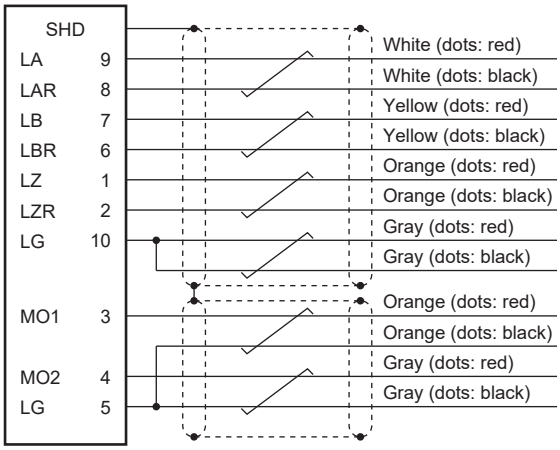

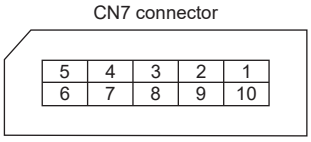

Viewed from the connection part.

Ethernet cable [G]

For Ethernet cables used for network wiring, refer to "Communication specifications" in the User's Manual (Communication Function).

A commercially available product example is as follows. For the latest product information, contact the manufacturer.

Product name		Model	Specifications	
Ethernet cable	For indoor use	SC-E5EW-S_M	"_" in the model represents the cable length (0.5 m, 1 to 100 m (in 1 m increments)).	Double shielded cable (Category 5e)
	For moving parts used indoors	SC-E5EW-S_M-MV	"_" in the model represents the cable length (0.1, 0.2, 0.3, 0.5 m, 1 to 45 m (in 1 m increments)).	
	For indoor and outdoor use	SC-E5EW-S_M-L	"_" in the model represents the cable length (1 to 100 m (in 1 m increments)).	

For commercial cables other than the above, refer to the CC-Link Partner Association website.

https://www.cc-link.org/ja/

Precautions

- When branching the CC-Link IE TSN network using a switching hub, use a switching hub (Class B) that is recommended by the CC-Link Partner Association. Although a switching hub (Class A) can also be used, there are restrictions on the type of topology that can be used. For further information, refer to "MELSEC iQ-R Motion Module User's Manual (Startup)".
- When branching the CC-Link IE Field Network Basic network using a switching hub, use a switching hub with a transmission speed of 100 Mbps or more. When using a switching hub without the auto-negotiation function, set the transmission speed to 100 Mbps and half duplex.

SSCNET III cable [B]

Point

- Do not look directly at the light emitted from the CN1A and CN1B connectors of the servo amplifier or the end of the SSCNET III cable. The light may cause discomfort when it enters your eyes.
- For the long distance cable longer than 50 m and the ultra-high flex life cable, refer to the following.

☞ Page 409 Cables manufactured by Mitsubishi Electric System & Service Co., Ltd.

Model explanations

The numbers in the cable length field of the table indicate the symbol filling the underline "_" in the cable model. The cables of the lengths with the numbers are available.

Cable model	Cable length											Flex type	Application/remark
	0.15 m	0.3 m	0.5 m	1 m	3 m	5 m	10 m	20 m	30 m	40 m	50 m		
MR-J3BUS_M	015	03	05	1	3	—	—	—	—	—	—	Standard (for fixed parts)	Standard cord inside cabinet
MR-J3BUS_M-A	—	—	—	—	—	5	10	20	—	—	—	Standard (for fixed parts)	For standard cables outside cabinet
MR-J3BUS_M-B *1	—	—	—	—	—	—	—	—	30	40	50	High flex life (for moving parts)	For long distance cables

*1 For cables shorter than 30 m, contact your local sales office.

Specifications

Item		Description			
SSCNET III cable model		MR-J3BUS_M		MR-J3BUS_M-A	MR-J3BUS_M-B
SSCNET III cable length		0.15 m	0.3 m to 3 m	5 m to 20 m	30 m to 50 m
Optical cable (cord)	Minimum bend radius	25 mm		Cable with reinforced sheath: 50 mm Cord: 25 mm	Cable with reinforced sheath: 50 mm Cord: 30 mm
	Tension strength	70 N	140 N	420 N (Cable with reinforced sheath)	980 N (Cable with reinforced sheath)
	Operating temperature range *1	-40 °C to 85 °C			-20 °C to 70 °C
	Ambience	Indoors (no direct sunlight), no solvent or oil			
	External appearance [mm]	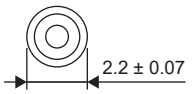	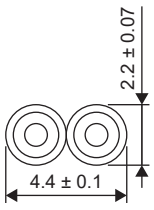	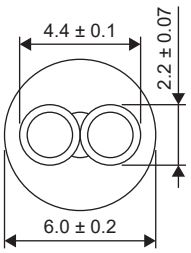	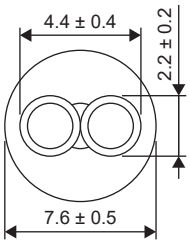

*1 The operating temperature range is the value for the SSCNET III cable (cord) only. The temperature conditions for the connector is the same as those for the servo amplifier.

Dimensions

■MR-J3BUS015M

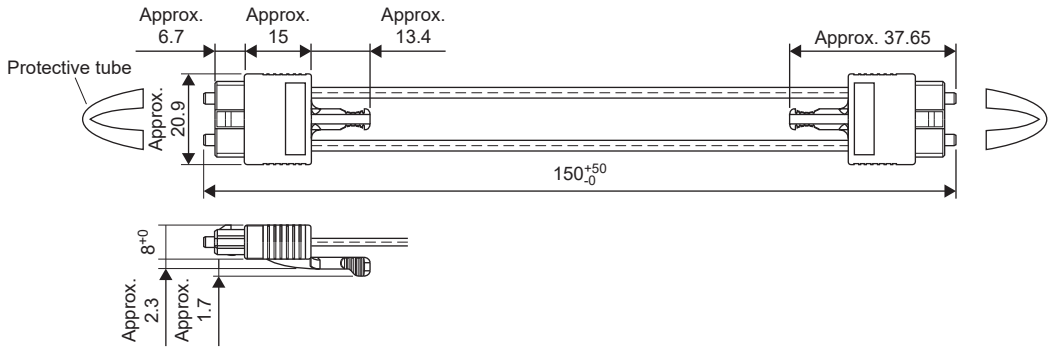

■MR-J3BUS03M to MR-J3BUS3M

For the cable length (L), refer to the following.

☞ Page 267 Model explanations

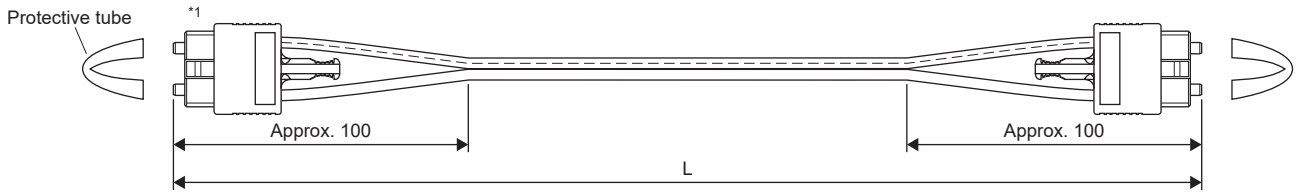

*1 The dimension of the connector is the same as that of the MR-J3BUS015M.

■MR-J3BUS5M-A to MR-J3BUS20M-A/MR-J3BUS30M-B to MR-J3BUS50M-B

For the cable length (L), refer to the following.

☞ Page 267 Model explanations

SSCNET III cable	Variable dimensions [mm]	
	A	B
MR-J3BUS5M-A to MR-J3BUS20M-A	100	30
MR-J3BUS30M-B to MR-J3BUS50M-B	150	50

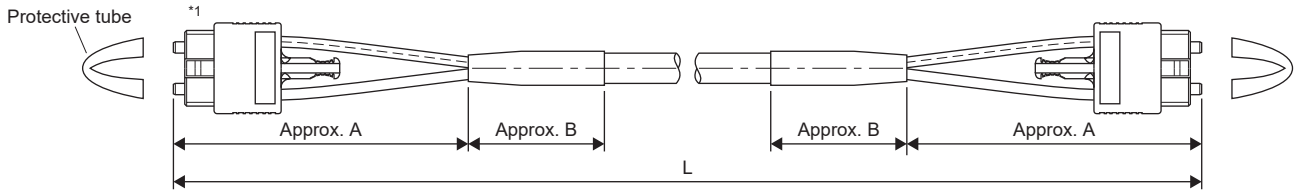

*1 The dimension of the connector is the same as that of the MR-J3BUS015M.

6.2 Regenerative option

Combination and regenerative power

The power values in the table are resistor-generated powers and not rated powers.

200 V class

Servo amplifier	Regenerative power [W]												
	Built-in regenerative resistor	MR-RB032 [40 Ω]	MR-RB12 [40 Ω]	MR-RB14 [26 Ω]	MR-RB30 [13 Ω] *2	MR-RB3N [9 Ω] *2	MR-RB31 [6.7 Ω] *2	MR-RB3Z [5.5 Ω] *2*3	MR-RB34 [26 Ω] *2	MR-RB50 [13 Ω] *1	MR-RB5N [9 Ω] *1	MR-RB51 [6.7 Ω] *1	MR-RB5Z [5.5 Ω] *1*3
MR-J5-10_	—	30	—	—	—	—	—	—	—	—	—	—	—
MR-J5-20_	10	30	100	—	—	—	—	—	—	—	—	—	—
MR-J5-40_	10	30	100	—	—	—	—	—	—	—	—	—	—
MR-J5-60_	10	30	100	—	—	—	—	—	—	—	—	—	—
MR-J5-70_	30	—	—	100	—	—	—	—	300	—	—	—	—
MR-J5-100_	30	—	—	100	—	—	—	—	300	—	—	—	—
MR-J5-200_	100	—	—	—	300	—	—	—	—	500	—	—	—
MR-J5-350_	100	—	—	—	—	300	—	—	—	—	500	—	—
MR-J5-500_	130	—	—	—	—	—	300	—	—	—	—	500	—
MR-J5-700_	170	—	—	—	—	—	—	300	—	—	—	—	500
MR-J5W2-22_	20	—	—	100	—	—	—	—	—	—	—	—	—
MR-J5W2-44_	20	—	—	100	—	—	—	—	—	—	—	—	—
MR-J5W2-77_	100	—	—	—	—	300	—	—	—	—	—	—	—
MR-J5W2-1010_	100	—	—	—	—	300	—	—	—	—	—	—	—
MR-J5W3-222_	30	—	—	100	—	—	—	—	300	—	—	—	—
MR-J5W3-444_	30	—	—	100	—	—	—	—	300	—	—	—	—

*1 Install a cooling fan when using this regenerative option.

*2 Depending on the operating conditions, a cooling fan must be installed.
☞ Page 278 Connection of regenerative option

*3 Available on servo amplifiers with firmware version B6 or later.

400 V class

Servo amplifier	Regenerative power [W]										
	Built-in regenerative resistor	MR-RB1H-4 [82 Ω]	MR-RB3M-4 [120 Ω] *1	MR-RB3G-4 [47 Ω] *1	MR-RB5G-4 [47 Ω] *1	MR-RB3Y-4 [36 Ω] *1	MR-RB5Y-4 [36 Ω] *1	MR-RB34-4 [26 Ω] *1	MR-RB54-4 [26 Ω] *1	MR-RB3U-4 [22 Ω] *1	MR-RB5U-4 [22 Ω] *1
MR-J5-60_4_	15	100	300	—	—	—	—	—	—	—	—
MR-J5-100_4_	15	100	300	—	—	—	—	—	—	—	—
MR-J5-200_4_	100	—	—	300	500	—	—	—	—	—	—
MR-J5-350_4_	120	—	—	—	—	300	500	—	—	—	—
MR-J5-500_4_	130	—	—	—	—	—	—	300	500	—	—
MR-J5-700_4_	170	—	—	—	—	—	—	—	—	300	500

*1 Install a cooling fan.

Selection of the regenerative option (1-axis servo amplifier)

A regenerative option for a horizontal axis can be selected with the rough calculation shown in this section. To select a regenerative option precisely, use the capacity selection software.

Rotary servo motor

■Regenerative energy calculation

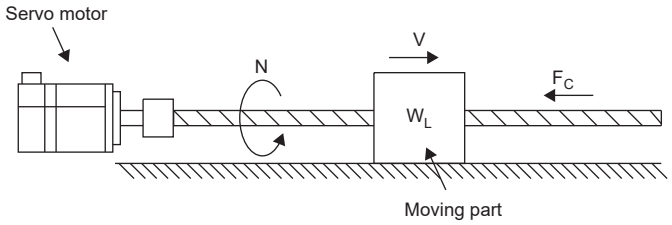

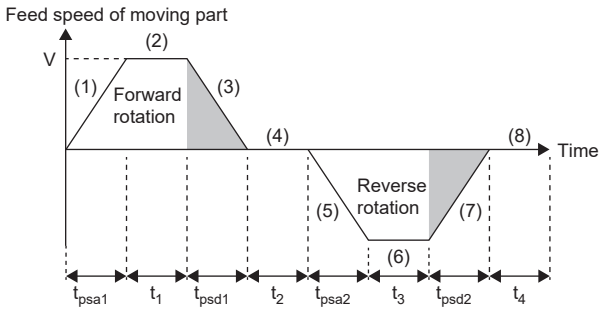

V: Feed speed of moving part [mm/min]
N: Servo motor speed (N = V/ΔS) [r/min]
ΔS: Travel distance per servo motor revolution (ΔS = PB) [mm/rev]
P_B: Ball screw lead [mm]
L_B: Ball screw length [mm]
D_B: Ball screw diameter [mm]
W_L: Moving part mass [kg]
F_C: Load antidrag setting [N]
T_L: Load torque converted into equivalent value on servo motor shaft [N•m]
η: Drive system efficiency
μ: Friction coefficient
J_L: Load moment of inertia converted into equivalent value on servo motor shaft [kg•cm^2]
J_M: Moment of inertia of the servo motor [kg•cm^2]
π: Pi constant
g: Gravitational acceleration [m/s^2]

Regenerative power	Torque T applied to servo motor [N•m] *1*2	Energy E [J]
(1)	$T_1 = \frac{(J_L/\eta + J_M) \cdot N}{9.55 \cdot 10^4} \cdot \frac{1}{t_{psa1}} + T_L$	$E_1 = \frac{0.1047}{2} \cdot N \cdot T_1 \cdot t_{psa1}$
(2)	$T_2 = T_L$	$E_2 = 0.1047 \cdot N \cdot T_2 \cdot t_1$
(3)	$T_3 = \frac{-(J_L \cdot \eta + J_M) \cdot N}{9.55 \cdot 10^4} \cdot \frac{1}{t_{psd1}} + T_L$	$E_3 = \frac{0.1047}{2} \cdot N \cdot T_3 \cdot t_{psd1}$
(4), (8)	$T_4, T_8 = 0$	$E_4, E_8 = 0$ (No regeneration)
(5)	$T_5 = \frac{(J_L/\eta + J_M) \cdot N}{9.55 \cdot 10^4} \cdot \frac{1}{t_{psa2}} + T_L$	$E_5 = \frac{0.1047}{2} \cdot N \cdot T_5 \cdot t_{psa2}$
(6)	$T_6 = T_L$	$E_6 = 0.1047 \cdot N \cdot T_6 \cdot t_3$
(7)	$T_7 = \frac{-(J_L \cdot \eta + J_M) \cdot N}{9.55 \cdot 10^4} \cdot \frac{1}{t_{psd2}} + T_L$	$E_7 = \frac{0.1047}{2} \cdot N \cdot T_7 \cdot t_{psd2}$

*1 Load torque converted into equivalent value on servo motor shaft TL can be calculated with the following formula.
$T_L = \{(F_C + (\mu \times W_L \times g)) \times \Delta S\} / (2000 \times \pi \times \eta)$

*2 Load moment of inertia converted into equivalent value on servo motor shaft J_L can be calculated with the following formula.
$J_L = J_{L1} + J_{L2} + J_{L3}$
J_{L1} is the load moment of inertia of the moving part, J_{L2} is the load moment of inertia of the ball screw, and J_{L3} is the load moment of inertia of the coupling. J_{L1} and J_{L2} can be calculated with the following formulas.
$J_{L1} = W_L \times (\Delta S / (20 \times \pi))^2$
$J_{L2} = \{(\pi \times 0.0078 \times (L_B / 10)) / 32\} \times (D_B / 10)^4$

From the calculation results in (1) to (8), find the absolute value (Es) of the sum total of negative energies.

■Losses of servo motor and servo amplifier in regenerative mode

The following table lists the efficiencies and other data of the servo motor and servo amplifier in the regenerative mode.

Servo amplifier	Inverse efficiency [%]	Capacitor charging [J]
MR-J5-10_	70	9
MR-J5-20_	85	9
MR-J5-40_	90	11
MR-J5-60_	90	11
MR-J5-70_	90	18
MR-J5-100_	90	18
MR-J5-200_	90	36
MR-J5-350_	90	40
MR-J5-500_	90	45
MR-J5-700_	90	70
MR-J5-60_4_	85	9
MR-J5-100_4_	85	12
MR-J5-200_4_	85	25
MR-J5-350_4_	85	35
MR-J5-500_4_	90	45
MR-J5-700_4_	90	70

Inverse efficiency (η_m): Efficiency including some efficiencies of the servo motor and servo amplifier when rated (regenerative) torque is generated at rated speed. Efficiency varies with the servo motor speed and generated torque. Because the characteristics of the electrolytic capacitor change with time, allow inverse efficiency of approximately 10 % higher than those shown above.

Capacitor charging (Ec): Energy charged into the electrolytic capacitor in the servo amplifier

Multiply the sum total of regenerative energies by the inverse efficiency, and subtract the capacitor charging from that result to calculate the energy consumed by the regenerative option.

$ER [J] = \eta_m \cdot E_s - E_c$

Select a regenerative option that meets the requirements of the system by calculating the power consumption of the regenerative option based on a one-cycle operation period tf [s].

$PR [W] = ER/tf$

For linear servo motors

■Thrust and energy calculation

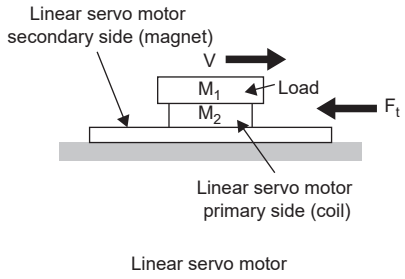

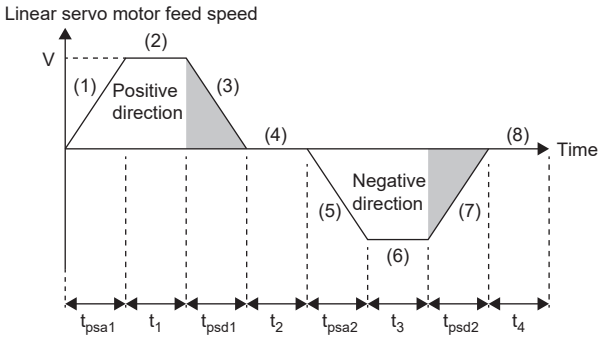

The following shows formulas of the linear servo motor thrust and energy at the operation pattern above.

Section	Thrust F of linear servo motor [N]	Energy E [J]
(1)	$F_1 = (M_1 + M_2) \cdot V/t_{psa1} + F_t$	$E_1 = V/2 \cdot F_1 \cdot t_{psa1}$
(2)	$F_2 = F_1$	$E_2 = V \cdot F_2 \cdot t_1$
(3)	$F_3 = -(M_1 + M_2) \cdot V/t_{psd1} + F_t$	$E_3 = V/2 \cdot F_3 \cdot t_{psd1}$
(4), (8)	$F_4, F_8 = 0$	$E_4, E_8 = 0$ (No regeneration)
(5)	$F_5 = (M_1 + M_2) \cdot V/t_{psa2} + F_t$	$E_5 = V/2 \cdot F_5 \cdot t_{psa2}$
(6)	$F_6 = F_t$	$E_6 = V \cdot F_6 \cdot t_3$
(7)	$F_7 = -(M_1 + M_2) \cdot V/t_{psd2} + F_t$	$E_7 = V/2 \cdot F_7 \cdot t_{psd2}$

From the calculation results in (1) to (8), find the absolute value (Es) of the sum total of negative energies.

■Losses of servo motor and servo amplifier in regenerative mode

For inverse efficiency and capacitor charging energy, refer to the following.

☞ Page 272 Losses of servo motor and servo amplifier in regenerative mode

■Regenerative energy calculation

Multiply the sum total of regenerative energies by the inverse efficiency, and subtract the capacitor charging from that result to calculate the energy consumed by the regenerative resistor.

$ER [J] = \eta \cdot E_s - E_c$

From the total of ERs whose subtraction results are positive and one-cycle period, the power consumption PR [W] per cycle of the regenerative resistor can be calculated with the following equation.

PR [W] = total of positive ERs/one-cycle operation period (tf)

Select a regenerative option based on the PR value. The regenerative option is not required when the energy consumption is equal to or less than the regenerative power of the regenerative resistor built into the servo amplifier.

Selection of the regenerative option (multi-axis servo amplifier)

A regenerative option for a horizontal axis can be selected with the rough calculation shown in this section. To select a regenerative option precisely, use the capacity selection software.

Rotary servo motor

■Regenerative energy calculation

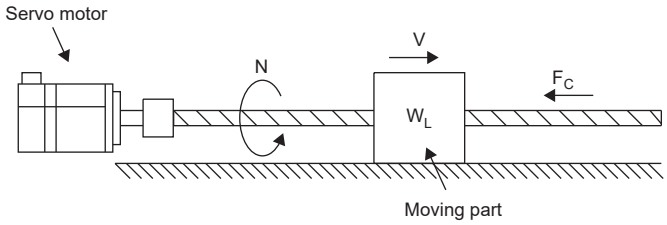

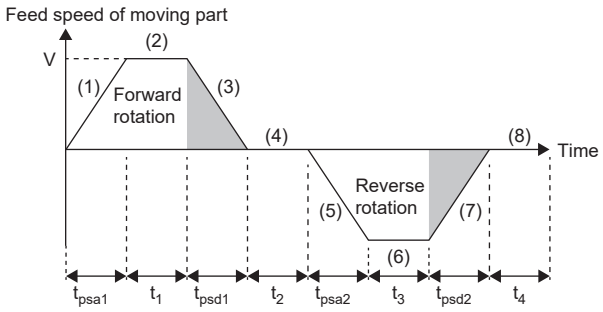

V: Feed speed of moving part [mm/min]
N: Servo motor speed (N = V/ΔS) [r/min]
ΔS: Travel distance per servo motor revolution (ΔS = PB) [mm/rev]
P_B: Ball screw lead [mm]
L_B: Ball screw length [mm]
D_B: Ball screw diameter [mm]
W_L: Moving part mass [kg]
F_C: Load antidrag setting [N]
T_L: Load torque converted into equivalent value on servo motor shaft [N•m]
η: Drive system efficiency
μ: Friction coefficient
J_L: Load moment of inertia converted into equivalent value on servo motor shaft [kg•cm^2]
J_M: Moment of inertia of the servo motor [kg•cm^2]
π: Pi constant
g: Gravitational acceleration [m/s^2]

Regenerative power	Torque T applied to servo motor [N•m] *1*2	Energy E [J]
(1)	$T_1 = \frac{(J_L/\eta + J_M) \cdot N}{9.55 \cdot 10^4} \cdot \frac{1}{t_{psa1}} + T_L$	$E_1 = \frac{0.1047}{2} \cdot N \cdot T_1 \cdot t_{psa1}$
(2)	$T_2 = T_L$	$E_2 = 0.1047 \cdot N \cdot T_2 \cdot t_1$
(3)	$T_3 = \frac{-(J_L \cdot \eta + J_M) \cdot N}{9.55 \cdot 10^4} \cdot \frac{1}{t_{psd1}} + T_L$	$E_3 = \frac{0.1047}{2} \cdot N \cdot T_3 \cdot t_{psd1}$
(4), (8)	$T_4, T_8 = 0$	$E_4, E_8 = 0$ (No regeneration)
(5)	$T_5 = \frac{(J_L/\eta + J_M) \cdot N}{9.55 \cdot 10^4} \cdot \frac{1}{t_{psa2}} + T_L$	$E_5 = \frac{0.1047}{2} \cdot N \cdot T_5 \cdot t_{psa2}$
(6)	$T_6 = T_L$	$E_6 = 0.1047 \cdot N \cdot T_6 \cdot t_3$
(7)	$T_7 = \frac{-(J_L \cdot \eta + J_M) \cdot N}{9.55 \cdot 10^4} \cdot \frac{1}{t_{psd2}} + T_L$	$E_7 = \frac{0.1047}{2} \cdot N \cdot T_7 \cdot t_{psd2}$

*1 Load torque converted into equivalent value on servo motor shaft TL can be calculated with the following formula.
$T_L = \{(F_C + (\mu \times W_L \times g)) \times \Delta S\} / (2000 \times \pi \times \eta)$

*2 Load moment of inertia converted into equivalent value on servo motor shaft J_L can be calculated with the following formula.
$J_L = J_{L1} + J_{L2} + J_{L3}$
J_{L1} is the load moment of inertia of the moving part, J_{L2} is the load moment of inertia of the ball screw, and J_{L3} is the load moment of inertia of the coupling. J_{L1} and J_{L2} can be calculated with the following formulas.
$J_{L1} = W_L \times (\Delta S / (20 \times \pi))^2$
$J_{L2} = \{(\pi \times 0.0078 \times (L_B / 10)) / 32\} \times (D_B / 10)^4$

From the calculation results in (1) to (8), find the absolute value (Es) of the sum total of negative energies.

■Losses of servo motor and servo amplifier in regenerative mode

The following table lists the efficiencies and other data of the servo motor and servo amplifier in the regenerative mode.

Servo amplifier	Inverse efficiency [%]	Capacitor charging [J]
MR-J5W2-22_	85	17
MR-J5W2-44_	90	21
MR-J5W2-77_	90	44
MR-J5W2-1010_	90	44
MR-J5W3-222_	85	21
MR-J5W3-444_	90	31

Inverse efficiency (η_m): Efficiency including some efficiencies of the servo motor and servo amplifier when rated (regenerative) torque is generated at rated speed. Efficiency varies with the speed and generated torque. Because the characteristics of the electrolytic capacitor change with time, allow inverse efficiency of approximately 10 % higher than those shown above.
Capacitor charging (Ec): Energy charged into the electrolytic capacitor in the servo amplifier

■Calculation of regenerative energy per cycle

As an example, calculate the regenerative energy in the following operation pattern with MR-J5W3-_ servo amplifiers.

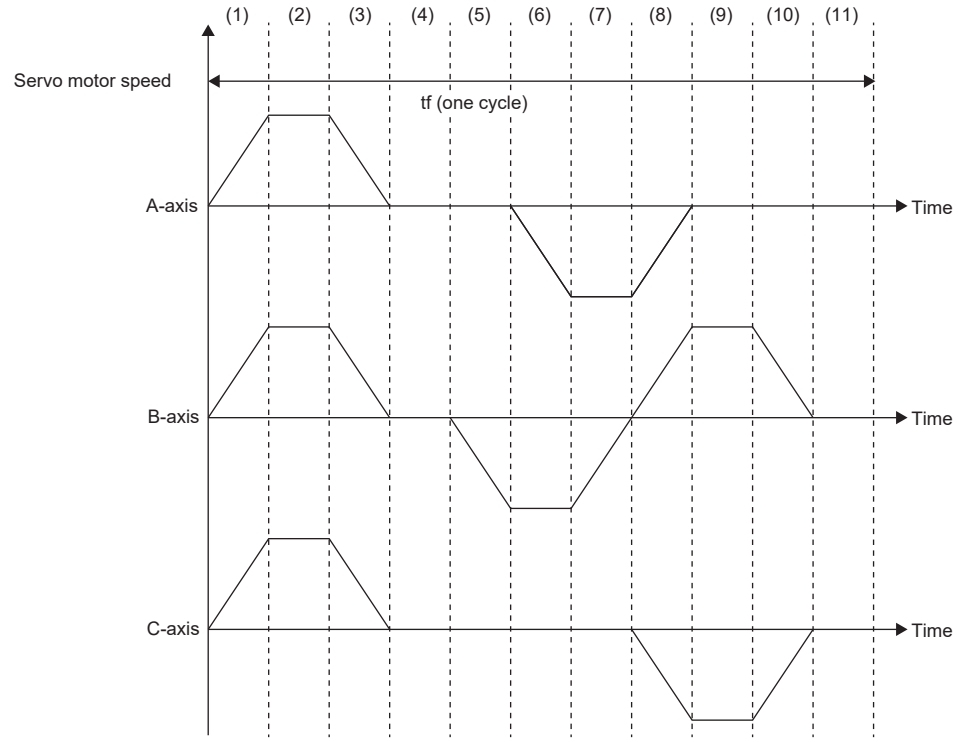

Calculate the energy at each timing in one cycle. Energy is a positive value in power running and a negative value in regeneration. Create a table like the one shown below, and write down the energy during power running/regeneration with signs.

Timing	(1)	(2)	(3)	(4)	(5)	(6)	(7)	(8)	(9)	(10)	(11)
A-axis	E1A	E2A	E3A	E4A	E5A	E6A	E7A	E8A	E9A	E10A	E11A
B-axis	E1B	E2B	E3B	E4B	E5B	E6B	E7B	E8B	E9B	E10B	E11B
C-axis	E1C	E2C	E3C	E4C	E5C	E6C	E7C	E8C	E9C	E10C	E11C
Sum	E1	E2	E3	E4	E5	E6	E7	E8	E9	E10	E11

Calculate the energy consumed by the regenerative resistor ER [J] with the following formula for the calculation results from E1 to E11 with negative values.

When the absolute value of the value in E1 to E11 is assumed to be Es: ER [J] = $\eta_m \cdot E_s - E_c$

If ER values are negative at all timings, the regenerative option is not needed. If the values of ER include positive values, from the total of ERs whose subtraction results are positive and one-cycle period, the power consumption PR [W] per cycle of the regenerative resistor can be calculated with the following equation.

PR [W] = total of positive ERs/one-cycle operation period (tf)

The regenerative option is not required when the PR value is equal to or less than the specification value for the built-in regenerative power of the servo amplifier.

For linear servo motors

■Thrust and energy calculation

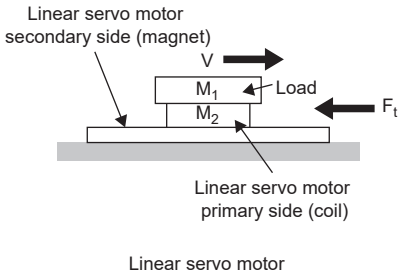

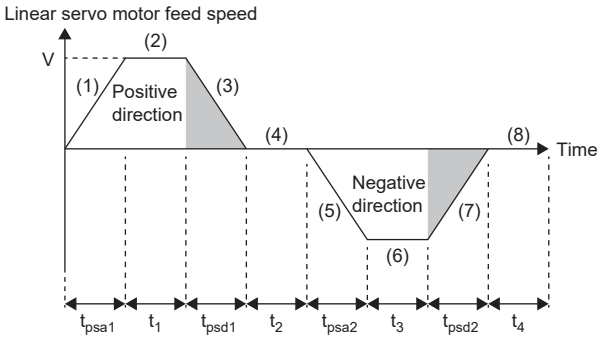

The following shows formulas of the linear servo motor thrust and energy at the operation pattern above.

Section	Thrust F of linear servo motor [N]	Energy E [J]
(1)	$F_1 = (M_1 + M_2) \cdot V/t_{psa1} + F_t$	$E_1 = V/2 \cdot F_1 \cdot t_{psa1}$
(2)	$F_2 = F_t$	$E_2 = V \cdot F_2 \cdot t_1$
(3)	$F_3 = -(M_1 + M_2) \cdot V/t_{psd1} + F_t$	$E_3 = V/2 \cdot F_3 \cdot t_{psd1}$
(4), (8)	$F_4, F_8 = 0$	$E_4, E_8 = 0$ (No regeneration)
(5)	$F_5 = (M_1 + M_2) \cdot V/t_{psa2} + F_t$	$E_5 = V/2 \cdot F_5 \cdot t_{psa2}$
(6)	$F_6 = F_t$	$E_6 = V \cdot F_6 \cdot t_3$
(7)	$F_7 = -(M_1 + M_2) \cdot V/t_{psd2} + F_t$	$E_7 = V/2 \cdot F_7 \cdot t_{psd2}$

From the calculation results in (1) to (8), find the absolute value (Es) of the sum total of negative energies.

■Losses of servo motor and servo amplifier in regenerative mode

For inverse efficiency and capacitor charging energy, refer to the following.

☞ Page 275 Losses of servo motor and servo amplifier in regenerative mode

■Regenerative energy calculation

Multiply the sum total of regenerative energies by the inverse efficiency, and subtract the capacitor charging from that result to calculate the energy consumed by the regenerative resistor.

$ER [J] = \eta \cdot E_s - E_c$

From the total of ERs whose subtraction results are positive and one-cycle period, the power consumption PR [W] per cycle of the regenerative resistor can be calculated with the following equation.

PR [W] = total of positive ERs/one-cycle operation period (tf)

Select a regenerative option based on the PR value. The regenerative option is not required when the energy consumption is equal to or less than the regenerative power of the regenerative resistor built into the servo amplifier.

Servo parameter setting

Set [Pr. PA02] according to the regenerative option to be used.

MR-J5-G/MR-J5W-G User's Manual (Parameters)
MR-J5-B/MR-J5W-B User's Manual (Parameters)
MR-J5-A User's Manual (Parameters)

Connection of regenerative option

Point

When using the MR-RB50, MR-RB5N, MR-RB51, MR-RB5Z, MR-RB3M-4, MR-RB3G-4, MR-RB5G-4, MR-RB3Y-4, MR-RB5Y-4, MR-RB34-4, MR-RB54-4, MR-RB3U-4, or MR-RB5U-4, cool it with a cooling fan. The cooling fan should be prepared by the customer.

For the wire sizes, refer to the following.

Page 326 Selection example of wires

The regenerative option generates heat that is 100 °C higher than the ambient temperature. Fully consider heat dissipation, the installation position, wires used, and other relevant areas before installing the option. For wiring, use flame-retardant wires or make the wires flame retardant, and do not let them touch the regenerative option. Use twisted wires with a maximum length of 5 m for a connection with the servo amplifier.

For servo amplifiers of 7 kW or less

Remove the wiring between P+ and D and install the regenerative option between P+ and C. G3 and G4 are terminals for the thermal sensor. Between G3 and G4 opens if the regenerative option overheats abnormally.

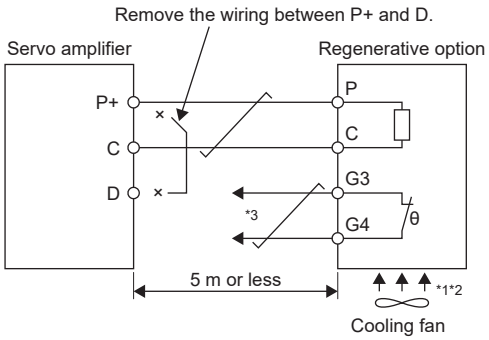

*1 When using the MR-RB50, MR-RB5N, MR-RB51, MR-RB5Z, MR-RB3M-4, MR-RB3G-4, MR-RB5G-4, MR-RB3Y-4, MR-RB5Y-4, MR-RB34-4, MR-RB54-4, MR-RB3U-4, or MR-RB5U-4, forcibly cool it with a cooling fan (1.0 m^3/min or more, 92 mm × 92 mm).

*2 If using the MR-RB30, MR-RB31, MR-RB3Z, MR-RB3N, or MR-RB34 with a regenerative load ratio of higher than 60 % and at an ambient temperature of above 55 °C, forcibly cool it with a cooling fan (1.0 m^3/min or more, 92 mm × 92 mm). A cooling fan is not required if the ambient temperature is 35 °C or less. (A cooling fan is required for the shaded area in the following graph.)

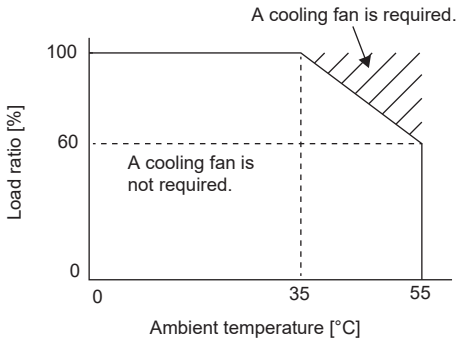

*3 Configure a sequence which will switch off the magnetic contactor when abnormal heating occurs.
G3-G4 contact specifications
Maximum voltage: 120 V AC/DC
Maximum current: 0.5 A/4.8 V DC
Maximum capacity: 2.4 VA

Mounting direction

The mounting direction of the regenerative option is shown below.

Regenerative option	Mounting direction
MR-RB032	Vertical mounting
MR-RB12	Vertical mounting
MR-RB14	Vertical mounting
MR-RB30	Vertical mounting
MR-RB50 (A cooling fan is required.)	Vertical mounting/horizontal mounting
MR-RB31	Vertical mounting
MR-RB51 (A cooling fan is required.)	Vertical mounting/horizontal mounting
MR-RB3N	Vertical mounting
MR-RB5N (A cooling fan is required.)	Vertical mounting/horizontal mounting
MR-RB1H-4	Vertical mounting
MR-RB3M-4 (A cooling fan is required.)	Vertical mounting
MR-RB3G-4 (A cooling fan is required.)	Vertical mounting
MR-RB5G-4 (A cooling fan is required.)	Vertical mounting/horizontal mounting
MR-RB34-4 (A cooling fan is required.)	Vertical mounting
MR-RB54-4 (A cooling fan is required.)	Vertical mounting/horizontal mounting
MR-RB3U-4 (A cooling fan is required.)	Vertical mounting
MR-RB5U-4 (A cooling fan is required.)	Vertical mounting/horizontal mounting
MR-RB3Y-4 (A cooling fan is required.)	Vertical mounting
MR-RB5Y-4 (A cooling fan is required.)	Vertical mounting/horizontal mounting
MR-RB3Z	Vertical mounting
MR-RB34	Vertical mounting
MR-RB5Z (A cooling fan is required.)	Vertical mounting/horizontal mounting

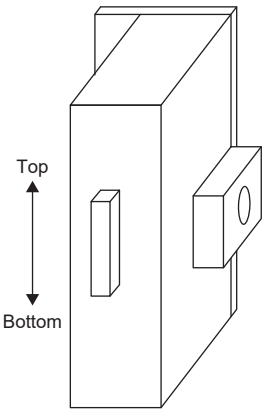

Vertical mounting

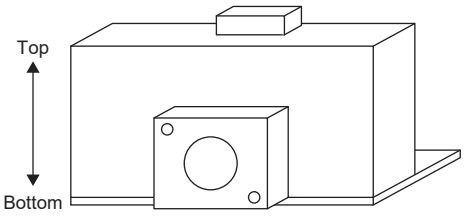

Horizontal mounting

Dimensions

MR-RB032

[Unit: mm]

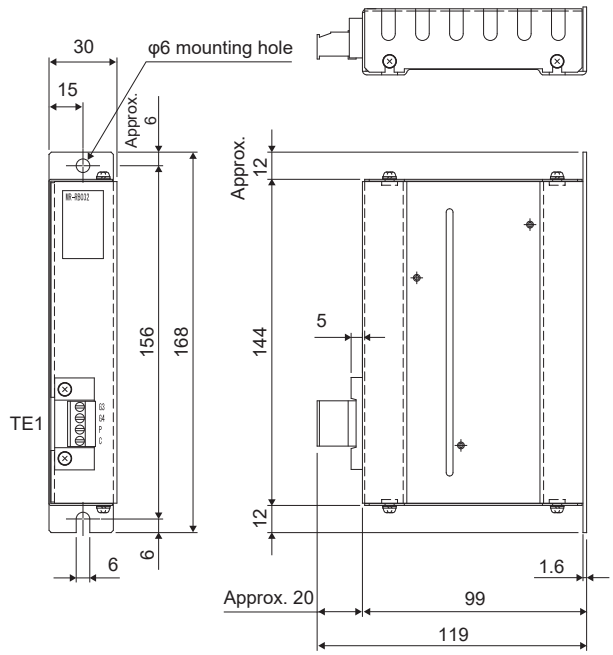

Mass: 0.5 [kg]

- Terminal TE1

G3
G4
P
C

Applicable wire size: 0.2 mm^2 to 2.5 mm^2 (24 to 12 AWG)

Tightening torque: 0.5 to 0.6 [N•m]

- Mounting screw

Screw size: M5

Tightening torque: 3.24 [N•m]

MR-RB12/MR-RB14

[Unit: mm]

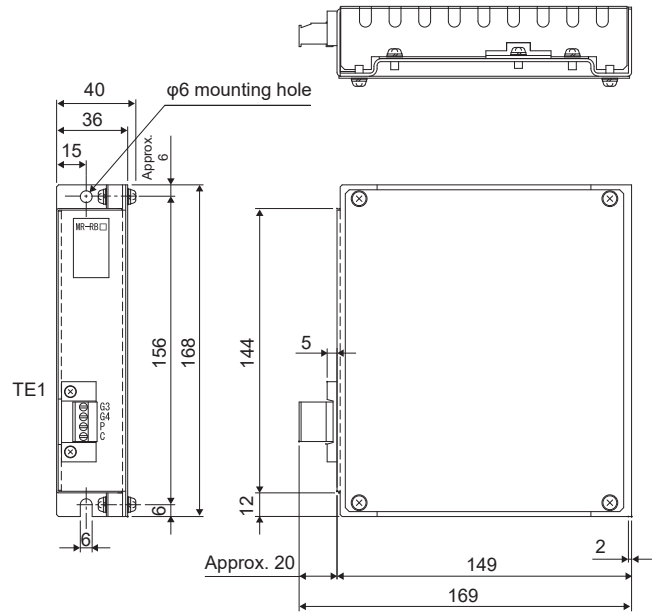

Mass: 1.1 [kg]

- Terminal TE1

G3
G4
P
C

Applicable wire size: 0.2 mm^2 to 2.5 mm^2 (24 to 12 AWG)

Tightening torque: 0.5 to 0.6 [N•m]

- Mounting screw

Screw size: M5

Tightening torque: 3.24 [N•m]

MR-RB1H-4

[Unit: mm]

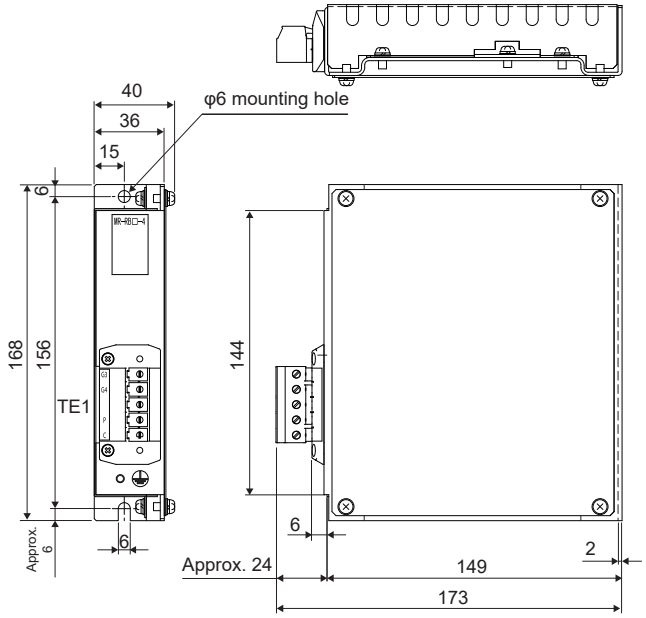

Mass: 1.1 [kg]

- Terminal TE1

G3
G4
P
C

Applicable wire size: 24 to 10 AWG

Tightening torque: 0.5 to 0.6 [N•m]

- Mounting screw

Screw size: M5

Tightening torque: 3.24 [N•m]

MR-RB30/MR-RB3N/MR-RB31/MR-RB3Z/MR-RB34/MR-RB3Y-4/MR-RB3G-4/MR-RB3M-4/MR-RB34-4/MR-RB3U-4

[Unit: mm]

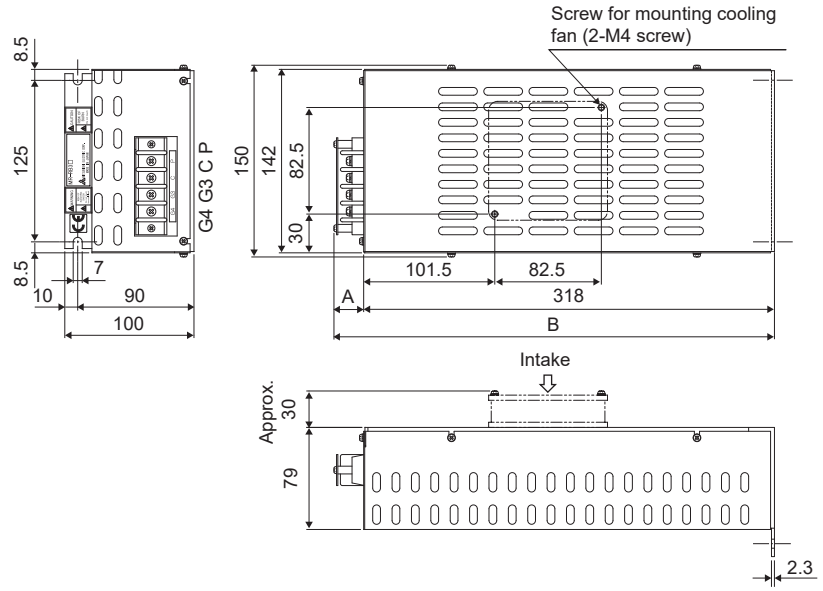

- Terminal block

P
C
G3
G4

Screw size: M4

Tightening torque: 1.2 [N•m]

- Mounting screw

Screw size: M6

Tightening torque: 5.4 [N•m]

Regenerative option	Variable dimensions		Mass [kg]
	A	B	
MR-RB30	17	335	2.9
MR-RB31			
MR-RB3Z			
MR-RB34			
MR-RB3N			
MR-RB34-4	23	341	
MR-RB3Y-4			
MR-RB3G-4			
MR-RB3M-4			
MR-RB3U-4			

MR-RB50/MR-RB5N/MR-RB51/MR-RB5Z/MR-RB5G-4/MR-RB5Y-4/MR-RB54-4/ MR-RB5U-4

[Unit: mm]

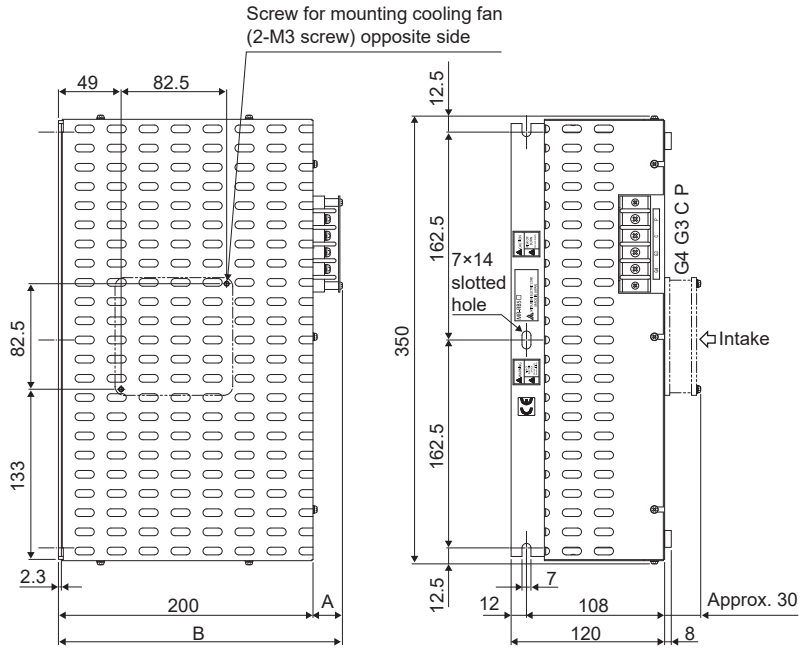

- Terminal block

P
C
G3
G4

Screw size: M4

Tightening torque: 1.2 [N•m]

- Mounting screw

Screw size: M6

Tightening torque: 5.4 [N•m]

Regenerative option	Variable dimensions		Mass [kg]
	A	B	
MR-RB50	17	217	5.6
MR-RB5N			
MR-RB51			
MR-RB5Z	23	223	
MR-RB5G-4			
MR-RB54-4			
MR-RB5Y-4			
MR-RB5U-4			

6.3 MR-CM simple converter

Combination of simple converter and servo amplifier

Simple converters cannot be used with 400 V class servo amplifiers.

Selection method

Select a servo amplifier for connection that meets the following conditions.

• Connectable servo amplifier models

MR-J5-10_ to MR-J5-200_, MR-J5W2-22_ to MR-J5W2-1010_, MR-J5W3-222_/MR-J5W3-444_

• The sum of rated capacities of connected servo amplifiers [kW] ≤ 3 kW (MR-CM3K rated output)

For multi-axis servo amplifiers, the calculation uses the sum of the rated capacities of all axes as the rated capacity of one servo amplifier.

• Number of connectable servo amplifiers to one MR-CM3K ≤ 6

A multi-axis servo amplifier is counted as one servo amplifier unit, rather than the number of axes.

Servo amplifier setting when using a simple converter

When using a simple converter, set [Pr. PA02.4] of the servo amplifier connected in the latter stage to "1" (simple converter is used).

If the simple converter is used without setting [Pr. PA02.4], unexpected alarms may occur.

The simple converter and the external regenerative option connected to the servo amplifier can be used together. To use an external regenerative option, set [Pr. PA02.0-1]. Note that the simple converter does not have a regenerative function. Also, an external regenerative option cannot be connected to the simple converter.

Simple converter standard specifications

Model			MR-CM3K
Converter output	Rated voltage		270 V DC to 324 V DC
	Rated current		20 A *1
Main circuit power supply input	Voltage/Frequency		3-phase 200 V AC to 240 V AC, 50/60 Hz
	Rated current		16 A *1
	Permissible voltage fluctuation		3-phase 170 V AC to 264 V AC
Overheat detection function	Thermal sensor		The contact between TH1 and TH2 opens if abnormal overheating occurs.
	Contact specifications	Maximum voltage	110 V AC/DC
		Maximum current	0.3 A/20 V DC
		Minimum current	0.1 mA/1 V DC
		Maximum capacity	6 VA
Applicable servo amplifier			MR-J5-10_ to MR-J5-200_ MR-J5W2-22_ to MR-J5W2-1010_ MR-J5W3-222_, MR-J5W3-444_
Maximum number of connectable servo amplifiers			6
Total capacity of connectable servo amplifiers			3 kW
Continuous rating			3 kW
Instantaneous maximum rating			9 kW
IP rating			IP20
Close mounting	3-phase power supply input		Possible
Mass			0.7 kg
Wire size	L1/L2/L3/PE		2 mm^2 to 3.5 mm^2 (14 to 12 AWG)
	P4/N-		2 mm^2 to 3.5 mm^2 (14 to 12 AWG)
Total wiring length from P4/N- of simple converter to P4/N- of servo amplifier			5 m or less

*1 The value when a 3-phase power supply input is used

Environment

Item	Operation	Transportation	Storage
Ambient temperature	0 ˚C to 60 ˚C (non-freezing) Class 3K3 (IEC 60721-3-3)	-25 ˚C to 70 ˚C (non-freezing) Class 2K12 (IEC 60721-3-2)	-25 ˚C to 70 ˚C (non-freezing) Class 1K4 (IEC 60721-3-1)
Ambient humidity	5 %RH to 95 %RH (non-condensing)	5 %RH to 95 %RH (non-condensing)	5 %RH to 95 %RH (non-condensing)
Ambience	Indoors (no direct sunlight); no corrosive gas, inflammable gas, oil mist or dust		
Altitude/atmospheric pressure	Altitude: 2000 m or less	Transportation conditions: Must be transported by ground/sea, or air at an atmospheric pressure of 700 hPa or more.	Atmospheric pressure: 700 hPa to 1060 hPa (equivalent to the altitude of -400 m to 3000 m.)
Vibration resistance	Under intermittent vibration: 10 Hz to 57 Hz, displacement amplitude 0.075 mm 57 Hz to 150 Hz, acceleration amplitude 9.8 m/s^2 Class 3M1 (IEC 60721-3-3) Under continuous vibration (in each of the X, Y, Z directions): 10 Hz to 55 Hz, acceleration amplitude 5.9 m/s^2	2 Hz to 9 Hz, displacement amplitude (half amplitude) 7.5 mm 9 Hz to 200 Hz, acceleration amplitude 20 m/s^2 Class 2M3 (IEC 60721-3-2)	2 Hz to 9 Hz, displacement amplitude (half amplitude) 1.5 mm 9 Hz to 200 Hz, acceleration amplitude 5 m/s^2 Class 1M2 (IEC 60721-3-1)

Example of configuration including peripheral equipment

For mounting CNP1 and CNP2 to the servo amplifier, use daisy chain power connectors. Do not use the connector set supplied with the servo amplifier.

☞ Page 259 List of cables/connector sets

■Restrictions

- When closely mounting multiple servo amplifiers, the servo amplifier on the right must have a larger depth than that on the left. Otherwise, the CNP1, CNP2, and CNP3 connectors cannot be removed.
- When installing a servo amplifier on the left that is deeper than the servo amplifier on the right without close mounting, leave at least 15 mm of clearance between the servo amplifiers.

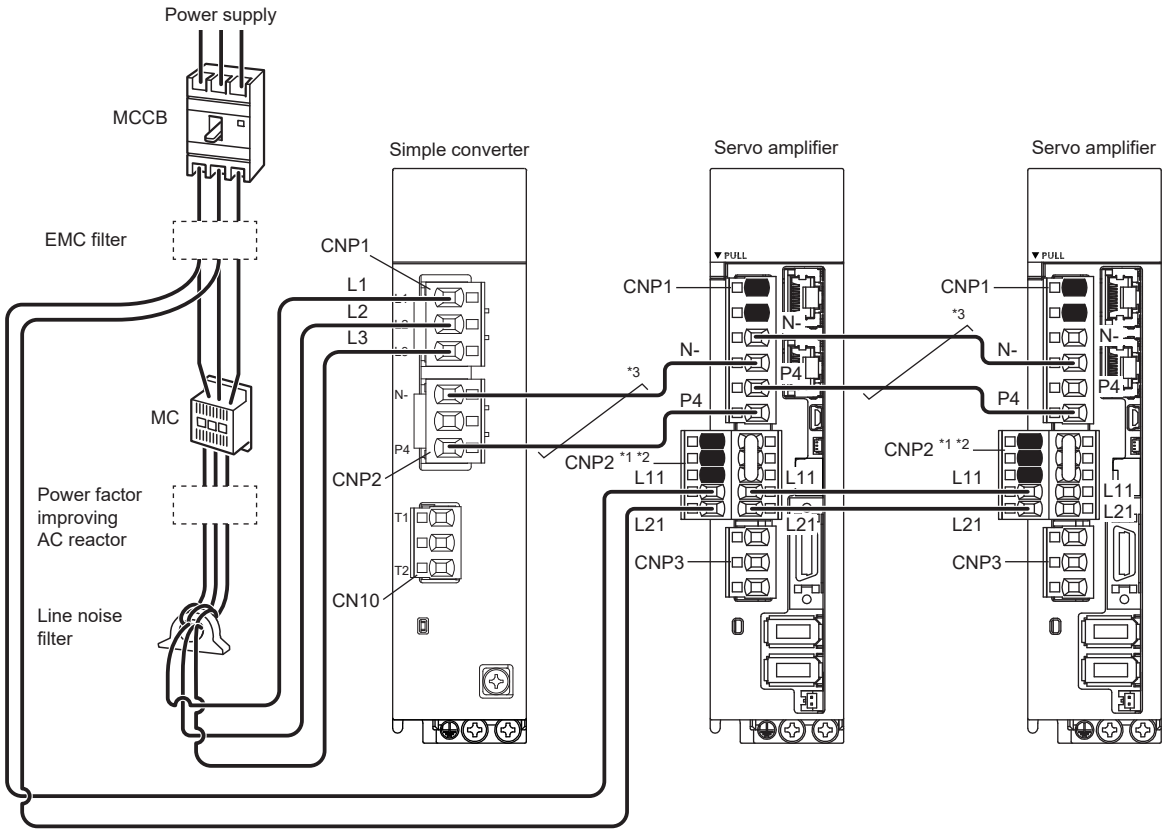

*1 Do not remove dummy pins or wires attached to CNP2 connectors.

*2 To detach a CNP2 connector when servo amplifiers are closely mounted, detach the CN3 connector of the servo amplifier on the left side before detaching the CNP2 connector.

*3 For the wires between the simple converter and a servo amplifier and between each servo amplifier, twist or bundle them with cable ties to keep the two wires close to each other. Also, total wiring length from P4/N- of the simple converter to P4/N- of the servo amplifier should be 5 m or less.

Parts identification

■200 V class

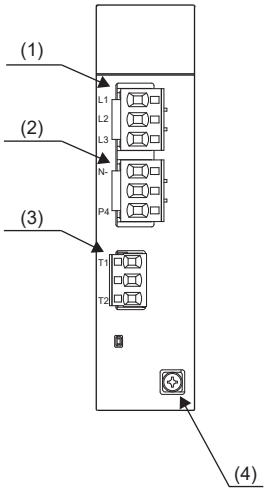

No.	Name/Application
(1)	Main circuit power connector (CNP1) Connect the input power supply.
(2)	PN bus connection connector (CNP2) Connect to P4/N- pin of next-axis servo amplifier.
(3)	Overheat detection connector (CN10) If overheating is detected, between terminals changes to "OPEN".
(4)	Protective earth PE terminal

■Pin assignment

• CNP1

Pin number diagram viewed from Wiring side

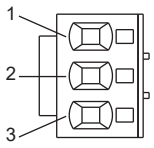

Pin No.	Signal name	Description
1	L1	L1 phase
2	L2	L2 phase
3	L3	L3 phase

• CNP2

Pin number diagram viewed from Wiring side

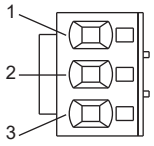

Pin No.	Signal name	Description
1	N-	Bus voltage reference potential
2	—	Unassigned
3	P4	Bus voltage plus potential

• CN10

Pin number diagram viewed from Wiring side

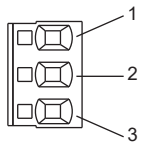

Pin No.	Signal name	Description
1	TH1	Main circuit overheat protection contact 1
2	—	Unassigned
3	TH2	Main circuit overheat protection contact 2

To wire to CNP1, CNP2, and CN10, use the supplied connectors.

Connector	Receptacle assembly	Applicable wire		Stripped length [mm]	Open tool	Manufacturer
		Size	Insulator OD			
CNP1	03JFAT-SAYGFK-XL(LB)	16 to 10 AWG	4.7 mm or less	11.5 mm	J-FAT-OT-EXL	JST
CNP2	02(16.0)JFAT-SAZGFKXL(LA)	16 to 10 AWG	4.7 mm or less	11.5 mm		
CN10	02(3-2)JFAT-SAYDFK-K7.5	18 to 14 AWG	3.9 mm or less	9 mm		

200 V class

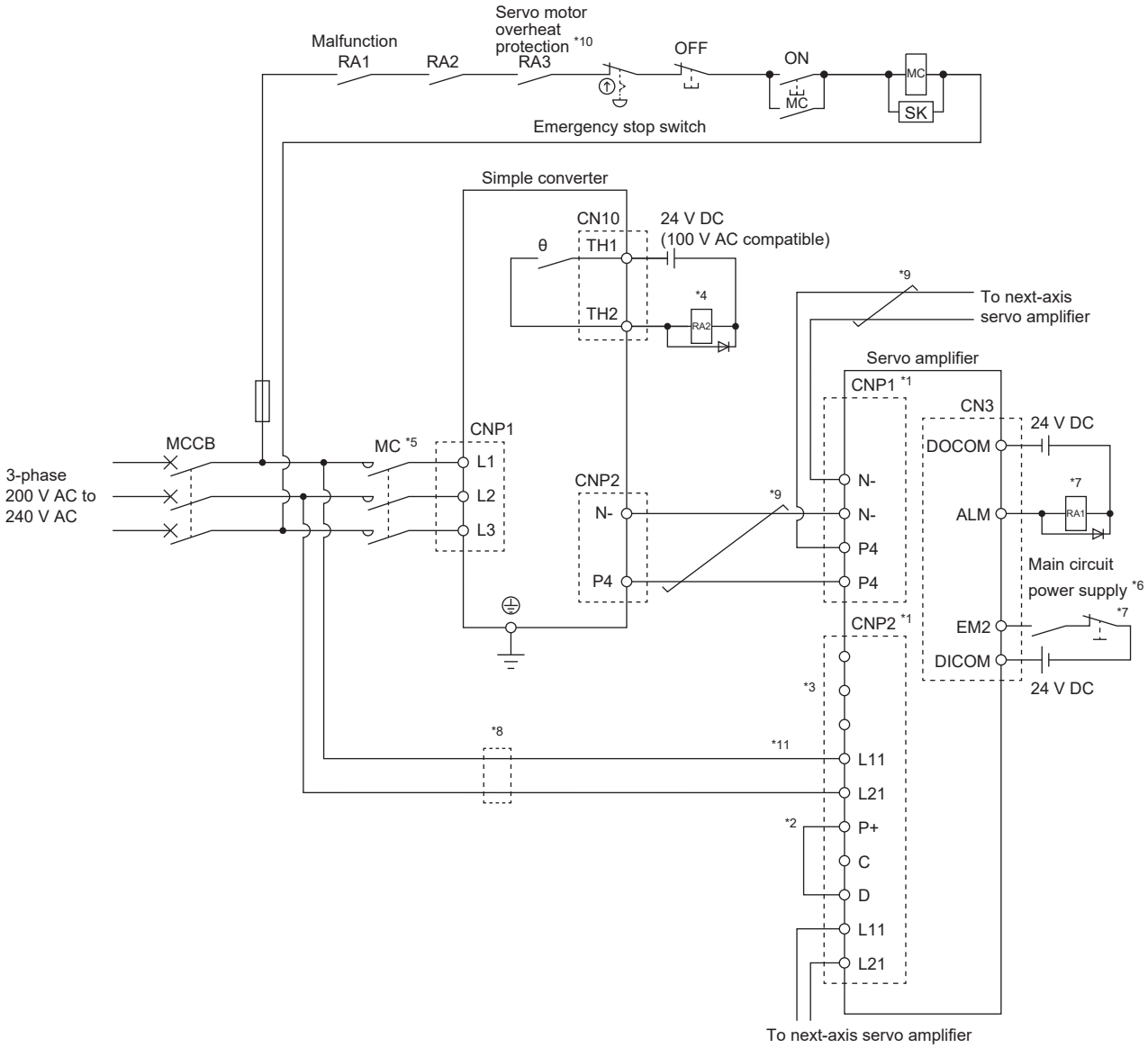
Malfunction
RA1
RA2
Servo motor overheat protection *10
RA3
OFF
ON
MC
SK
Emergency stop switch
Simple converter
CN10
TH1
TH2
θ
24 V DC
(100 V AC compatible)
*4
RA2
*9
To next-axis servo amplifier
Servo amplifier
CNP1 *1
CN3
24 V DC
DOCOM
ALM
*7
RA1
MCCB
MC *5
CNP1
L1
L2
L3
3-phase
200 V AC to
240 V AC
CNP2
N-
P4
Main circuit power supply *6
EM2
DICOM
24 V DC
CNP2 *1
*3
*8
*11
L11
L21
*2
P+
C
D
To next-axis servo amplifier

*1 Use daisy chain power connectors for CNP1 and CNP2. Do not use the connector set supplied with the servo amplifier.
☞ Page 259 List of cables/connector sets
*2 Connect P+ and D terminals. (Factory-wired)
*3 Do not remove dummy pins or wires attached to CNP2 connectors.
*4 If overheating of the simple converter is detected, the state between TH1 and TH2 is open. Configure wiring that turns off the servo-on command after deceleration to a stop by an enabled servo forced stop, an enabled controller emergency stop, or others simultaneously with when the main circuit power supply of the simple converter is shut off using a 2a contact relay or the like.
*5 Use the magnetic contactor with an operation delay time (interval between current being applied to the coil until closure of contacts) of 80 ms or less. The bus voltage may drop depending on the main circuit power supply voltage and operation pattern, causing a dynamic brake deceleration during a forced stop deceleration.
*6 To prevent an unexpected restart of the servo amplifier, configure a circuit to turn off EM2 of the servo amplifier when the main circuit power supply is turned off.
*7 When using multiple servo amplifiers connected to a common bus, configure a circuit that shuts off the main circuit power supply if an alarm occurs in any of the servo amplifiers. (Configure a sequence using an I/O module or equivalent equipment. Alternatively, connect an alarm output contact relay for each servo amplifier in sequence on the coil side of the magnetic contactor to shut off the magnetic contactor.) In addition, stop commands from the controller simultaneously with the main circuit power supply shutting off.
*8 Install an overcurrent protection device (molded-case circuit breaker, fuse, etc.) to protect the branch circuit.
*9 For the wires between the simple converter and a servo amplifier and between each servo amplifier, twist or bundle them with cable ties to keep the two wires close to each other. Also, total wiring length from P4/N- of the simple converter to P4/N- of the servo amplifier should be 5 m or less.
*10 When connecting a linear servo motor that has a thermal protector, add a contact that interlocks with the thermal protector output of the linear servo motor.
*11 Even if the control circuit power supply is separated from the main circuit power supply using an uninterruptible power supply (UPS) or insulation transformer, do not ground L11 and L21.

• Connection example of driving on/off of main circuit power supply with DC power supply

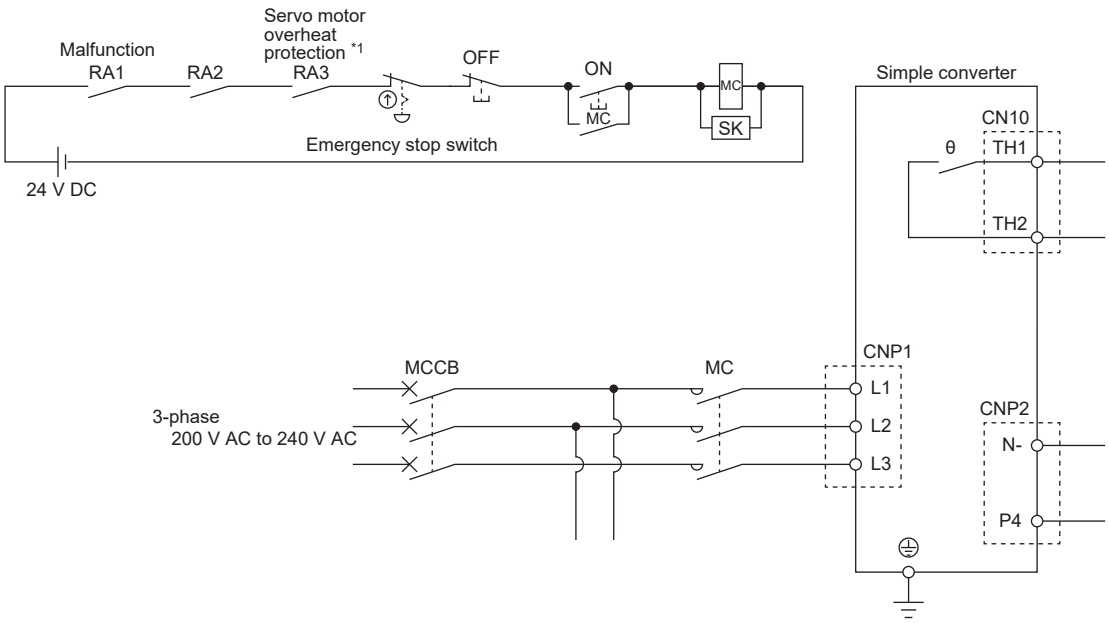

*1 When connecting a linear servo motor that has a thermal protector, add a contact that interlocks with the thermal protector output of the linear servo motor.

• Magnetic contactor used for driving on/off of main circuit power supply with DC power supply

Use the magnetic contactor with an operation delay time (interval between current being applied to the coil until closure of contacts) of 80 ms or less.

Model	Magnetic contactor
MR-CM3K	SD-T21

Dimensions

[Unit: mm]

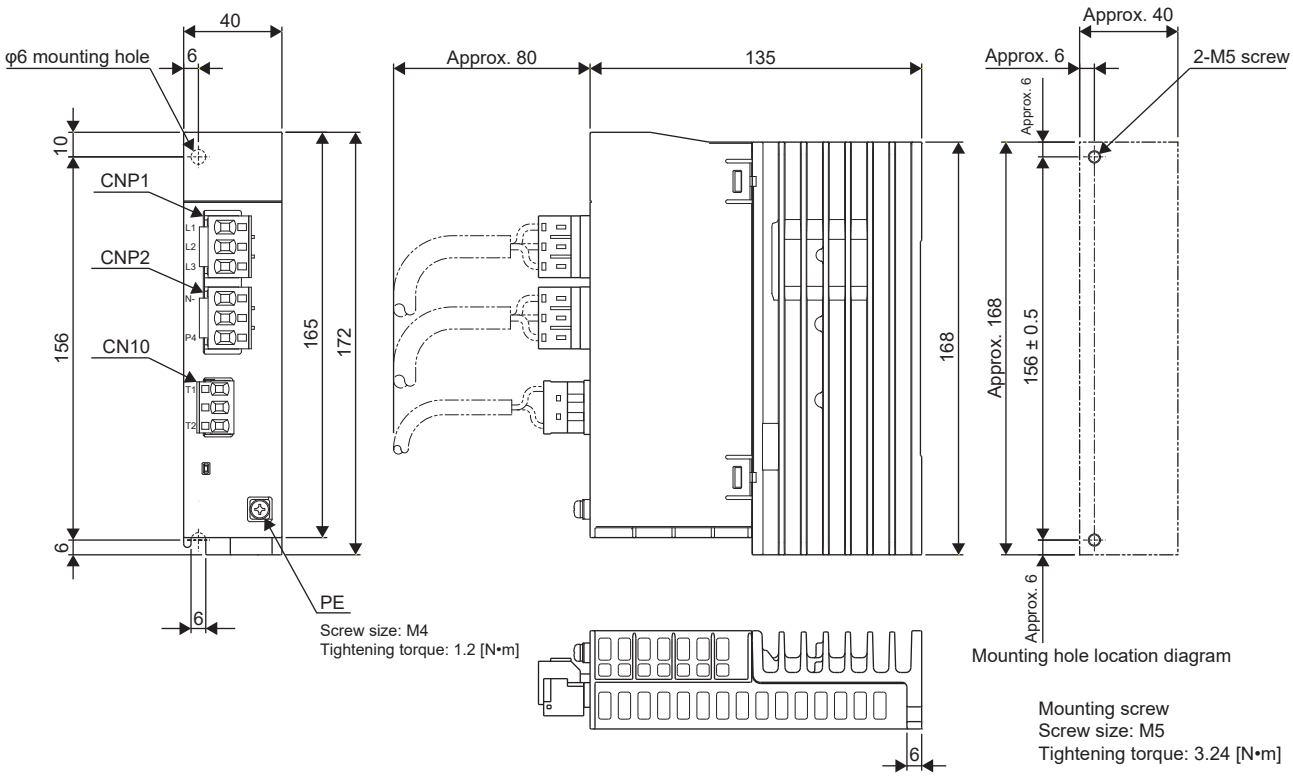

Peripheral equipment

Molded-case circuit breakers, fuses, magnetic contactors

Circuit breakers, fuses, or motor circuit breakers (Type E combination motor controllers) that match the sum of the rated capacities [kW] of the connected servo amplifiers can be used. The selection conditions are as follows. When using a multi-axis servo amplifier, calculate the sum of the rated capacities of all axes as the rated capacity of the servo amplifier.
The sum of rated capacities of connected servo amplifiers [kW] ≤ 3 kW (MR-CM3K rated output)

Simple converter	Total servo amplifier capacity	Molded-case circuit breaker *1			Fuse			Magnetic contactor	
		Frame, rated current		Voltage AC [V]	Class	Current [A]	Voltage AC [V]		
		When a reactor is not used	When a reactor is used					AC power supply	DC power supply
MR-CM3K	Less than 2 kW	30 to 125 A frame 15 to 20 A	30 to 125 A frame 15 to 20 A	240	T	15 to 30	300	S-T21	SD-T21
	2 kW or more	30 to 125 A frame 20 to 30 A	30 to 125 A frame 20 to 30 A	240	T	40	300		

*1 Refer to the following page for compliance with IEC/EN/UL/CSA standards.
☞ Page 340 Molded-case circuit breaker/Semiconductor fuse (simple converter)

Motor circuit breaker (Type E combination motor controller)

Voltage	Sum of rated capacities of servo amplifiers [kW]	Input rating [Vac]	Input phase	Motor circuit breaker (Type E combination motor controller)			SCCR [kA]
				Model	Rating [Vac]	Rated current [A] (heater design)	
200 V system	100 W	200 to 240	3-phase	MMP-T32	240	1.6	50
	200 W or less					2.5	
	400 W or less					4	
	600 W or less					6.3	
	750 W or less					6.3	
	1 kW or less					8	
	2 kW or less					18	
	Over 2 kW					25	25

Power factor improving AC reactor

Simple converter	Power factor improving AC reactor
MR-CM3K	FR-HAL-7.5K

EMC filter

For selection of EMC filters, refer to the following and the EMC Installation Guidelines.
☞ Page 367 EMC filter (recommended)

Surge protector

Install a surge protector that meets the EMC measures of the servo amplifier to be connected onto the primary (input) side of the simple converter. PSPD series (manufactured by Okaya Electric Industries) or LT-CS-WS series (manufactured by Soshin Electric)

I/O wires

The input/output wire size of the simple converter is determined by the sum of the rated input currents of the connected servo amplifiers.

The thickness of the output wires of the servo amplifiers that are connected to the simple converter should be the same as that of the servo amplifiers that are not directly connected to the simple converter.

Total current of servo amplifiers	Wire (75 °C)
12 A or less	14 AWG (2 mm^2)
Over 12 A	12 AWG (3.5 mm^2)

Radio noise filter (FR-BIF(-H))

When using the radio noise filter (FR-BIF(-H)) as an EMC measure for the servo amplifier connected to the simple converter, install the radio noise filter on the primary (input) side of the simple converter.

Line noise filter (FR-BSF01/FR-BLF)

When using a line noise filter (FR-BSF01/FR-BLF) as an EMC measure for the servo amplifier connected to the simple converter, install the line noise filter on the primary (input) side of the simple converter.

Mounting direction and clearances

Point

Install the simple converter in the specified direction. Failing to do so may cause the amplifier to malfunction.
Mount the simple converter in a cabinet that meets IP54 in the correct vertical direction to maintain pollution degree 2.

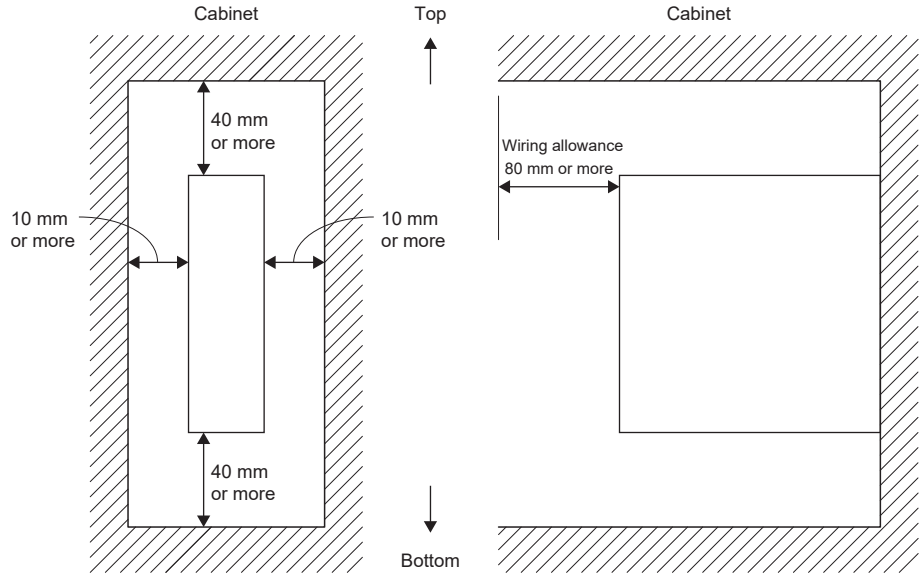

6.4 Multifunction regeneration converter (FR-XC-(H))

Point

For details on the multifunction regeneration converter (FR-XC-(H)), refer to "FR-XC Instruction Manual (IB-0600668ENG)".

Precautions

- Set the FR-XC-(H) to the common bus regeneration mode by turning on the switch 1 of the function selecting switch (SW2).
- Do not apply power to the main circuit power supply terminals (L1/L2/L3) of the servo amplifier. Doing so may fail the servo amplifier and the FR-XC-(H).
- Connect the polarities of the DC power supply between the FR-XC-(H) and the servo amplifier correctly. Failing to do so may fail the FR-XC-(H) and the servo amplifier.
- Regenerative capacity cannot be enhanced even if two or more FR-XC-(H) are connected.
- When using the FR-XC-H, the rated voltage and the permissible fluctuation of the input power supply must be within the following range.

Rated voltage: 3-phase, 380 to 480 V, 50 Hz/60 Hz

Permissible fluctuation: 3-phase, 323 to 528 V, 50 Hz/60 Hz

- To prevent malfunctions, separate the wiring for DC power supplies and signals.

Servo amplifier settings

When using the FR-XC-(H), set the parameters as follows.

- [Pr. PA02.0-1]: 01/[Pr. PA02.4]: 0
- [Pr. PA04.2]: 0/[Pr. PA04.3]: 0

Capacity selection

Selection conditions

The multifunction regeneration converter FR-XC-(H) can be used with 200 V class servo amplifiers with capacities of 100 W to 7 kW and 400 V class servo amplifiers with capacities of 600 W to 7 kW. Use the following conditions to select a multifunction regeneration converter.

- Number of servo amplifiers to be connected to one FR-XC-(H) is 10 or less
- Total capacity of servo amplifiers [kW] ≤ Total capacity of servo amplifiers that can be connected to the FR-XC-(H) [kW]
- Effective value of total output power of servo motors [kW] ≤ Continuous output of the FR-XC-(H) [kW]
- Maximum value of total output power of servo motors [kW] ≤ Instantaneous maximum output of the FR-XC-(H) [kW]

Item	FR-XC-(H)-_						
	7.5K	11K	15K	22K	30K	37K	55K
Rated capacity [kW]	7.5	11	15	22	30	37	55
Maximum number of connectable servo amplifiers	10						
Total capacity of connectable servo amplifiers [kW] *1	3.5 (5.5)	5.5 (7.5)	7.5 (11)	22	30	37	55
Continuous output [kW] *1	3.5 (5.5)	5.5 (7.5)	7.5 (11)	18.5	22	30	45
Instantaneous maximum output [kW]	11.25	16.5	22.5	33	45	55.5	82.5

*1 Values in parentheses are when six servo amplifiers or less are connected.

■Dedicated stand-alone reactor

Install a dedicated stand-alone reactor on the multifunction regeneration converter FR-XC-(H) according to the following table.

Multifunction regeneration converter	Dedicated stand-alone reactor
FR-XC-7.5K	FR-XCL-7.5K
FR-XC-11K	FR-XCL-11K
FR-XC-15K	FR-XCL-15K
FR-XC-22K	FR-XCL-22K
FR-XC-30K	FR-XCL-30K
FR-XC-37K	FR-XCL-37K
FR-XC-55K	FR-XCL-55K
FR-XC-H7.5K	FR-XCL-H7.5K
FR-XC-H11K	FR-XCL-H11K
FR-XC-H15K	FR-XCL-H15K
FR-XC-H22K	FR-XCL-H22K
FR-XC-H30K	FR-XCL-H30K
FR-XC-H37K	FR-XCL-H37K
FR-XC-H55K	FR-XCL-H55K

Selection example

The following information explains how to select a multifunction regeneration converter to connect to the servo amplifiers listed below.

Servo amplifier	Number of units	Servo motor	Number of units
MR-J5-500G	1	HK-ST502W	1
MR-J5-350G	1	HK-ST352W	1
MR-J5-700G	2	HK-ST702W	2

1. Calculate the running power and regenerative power from the servo motor speed and torque with the following formulas.

• For rotary servo motors

Running power and regenerative power [W] = Servo motor speed [r/min] × Torque [N•m]/9.55

• For linear servo motors

Running power and regenerative power [W] = Servo motor speed [m/s] × Thrust [N]

(Running power is indicated by positive values, and regenerative power is indicted by negative values.)

2. Calculate the total output power of the servo motors from the running power and regenerative power of each servo motor.

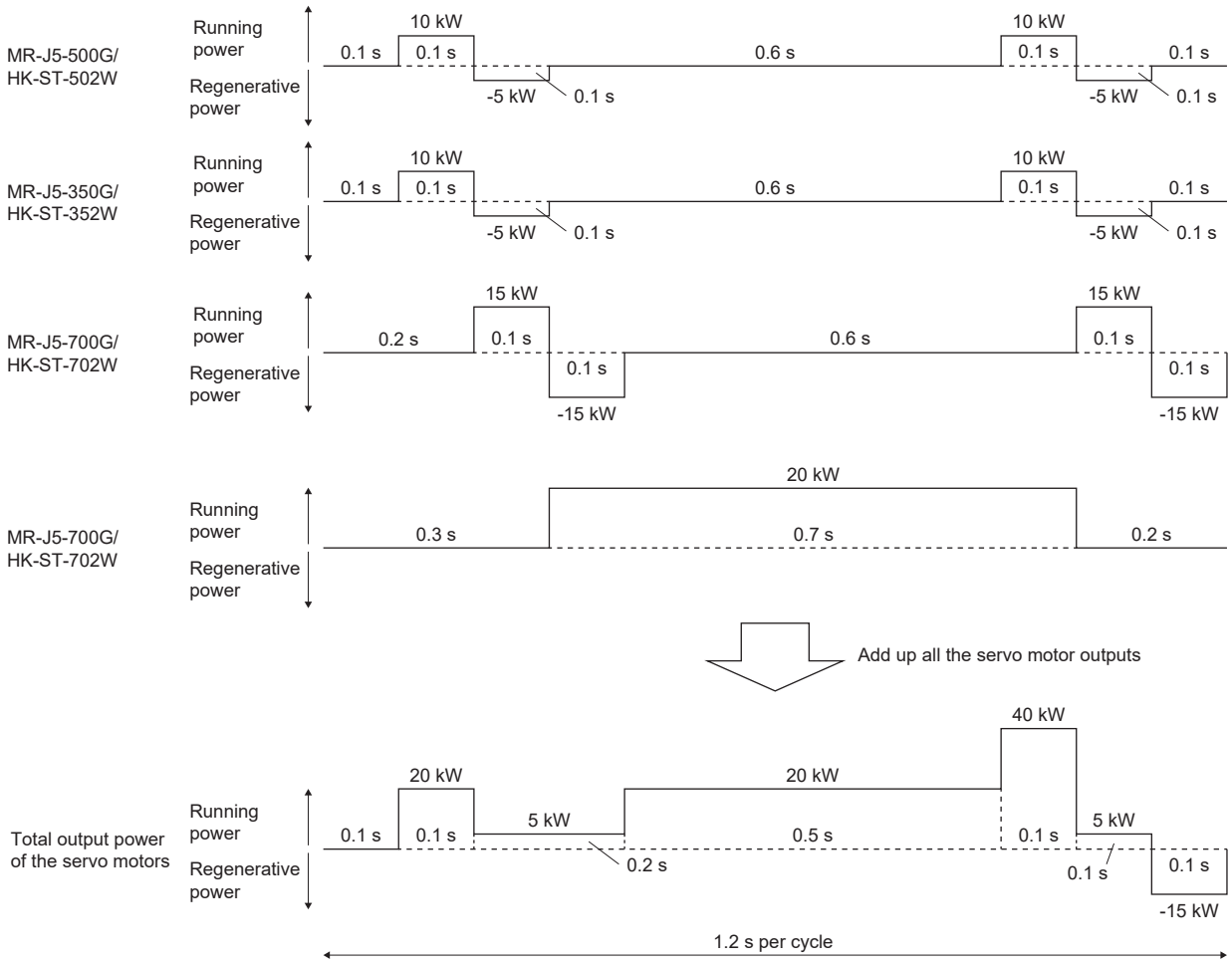

3. Select a multifunction regeneration converter based on the selection conditions.

• Servo amplifier units: 4 ≤ 10

⇒ Number of servo amplifiers OK.

• Total capacity of servo amplifiers [kW] = 5 kW + 3.5 kW + 7 kW + 7 kW =22.5 kW

⇒ FR-XC-30K or more

• The effective value of the total servo motor output power [kW]

$= \sqrt{(20^2 \times 0.1 + 5^2 \times 0.2 + 20^2 \times 0.5 + 40^2 \times 0.1 + 5^2 \times 0.1 + (-15)^2 \times 0.1)/1.2} = 18.93$ kW

⇒ FR-XC-30K or more

• Maximum value of the total servo motor output power [kW] = 40 kW

⇒ FR-XC-30K or more

Therefore, the multifunction regeneration converter selected should be the "FR-XC-30K".

Connection diagram

200 V class

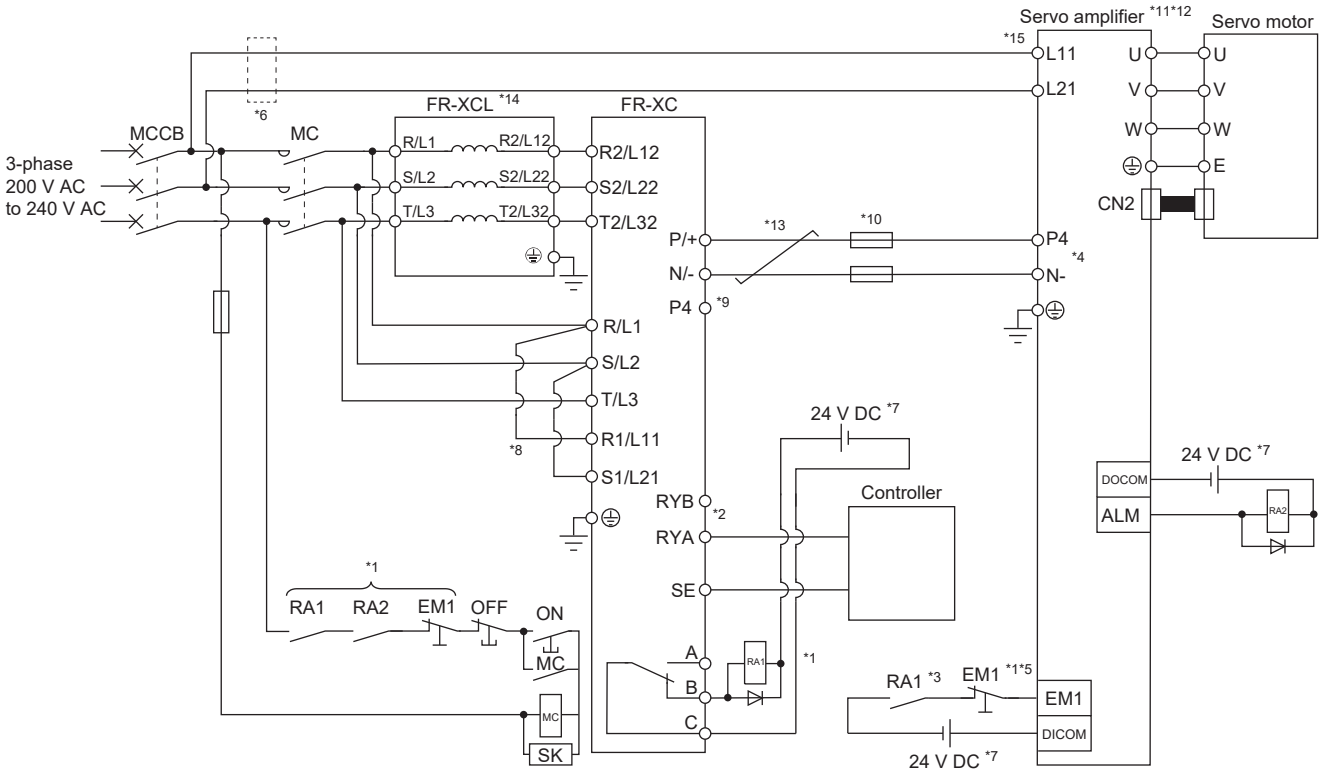

*1 Configure a sequence that shuts off the main circuit power supply in the following situations:
· When an FR-XC or servo amplifier alarm occurs.
· When EM1 (Forced stop 1) is enabled.

*2 Configure a sequence that shifts the status to servo-on once the FR-XC is ready.

*3 Ensure that the servo motor stops by using a forced stop input to the controller when an alarm occurs in the FR-XC. If the controller does not have an emergency stop input, use the forced stop input of the servo amplifier to stop the servo motor.

*4 When using the FR-XC, remove the wire between P3 and P4.

*5 To use EM1 (Forced stop 1), set [Pr. PA04.3] and [Pr. PA04.2] to "0".

*6 If wires used for L11 and L21 are thinner than wires used for L1, L2, and L3, use a molded-case circuit breaker.

*7 Although the diagram shows the input signal and the output signal each using a separate 24 V DC power supply for illustrative purposes, the system can be configured to use a single 24 V DC power supply.

*8 Remove the R1/L11 and S1/L21 jumpers when using a dedicated power supply for the control circuit.

*9 Do not connect anything to the P4 terminal of the FR-XC.

*10 Install a fuse on each wire between the FR-XC and servo amplifier.

*11 Wire the built-in regenerative resistor when using servo amplifiers with a capacity of 7 kW or less. (Factory-wired)

*12 The inputs/outputs (main circuit) of the FR-XC and servo amplifier contain high-frequency components which may interfere with the signals of peripheral communication equipment. Installing a radio noise filter (FR-BIF) or line noise filter (FR-BSF01 or FR-BLF) can help reduce the effects of signal interference.

*13 When connecting a DC power supply between the FR-XC and servo amplifier, the wires should be twisted and the total length should be 5 m or less (3 m or less for compliance with EMC).

*14 Install a dedicated stand-alone reactor (FR-XCL) when using the FR-XC. Do not use a power factor improving AC reactor (FR-HAL) or power factor improving DC reactor (FR-HEL).
☞ Page 296 Dedicated stand-alone reactor

*15 Even if the control circuit power supply is separated from the main circuit power supply using an uninterruptible power supply (UPS) or insulation transformer, do not ground L11 and L21.

400 V class

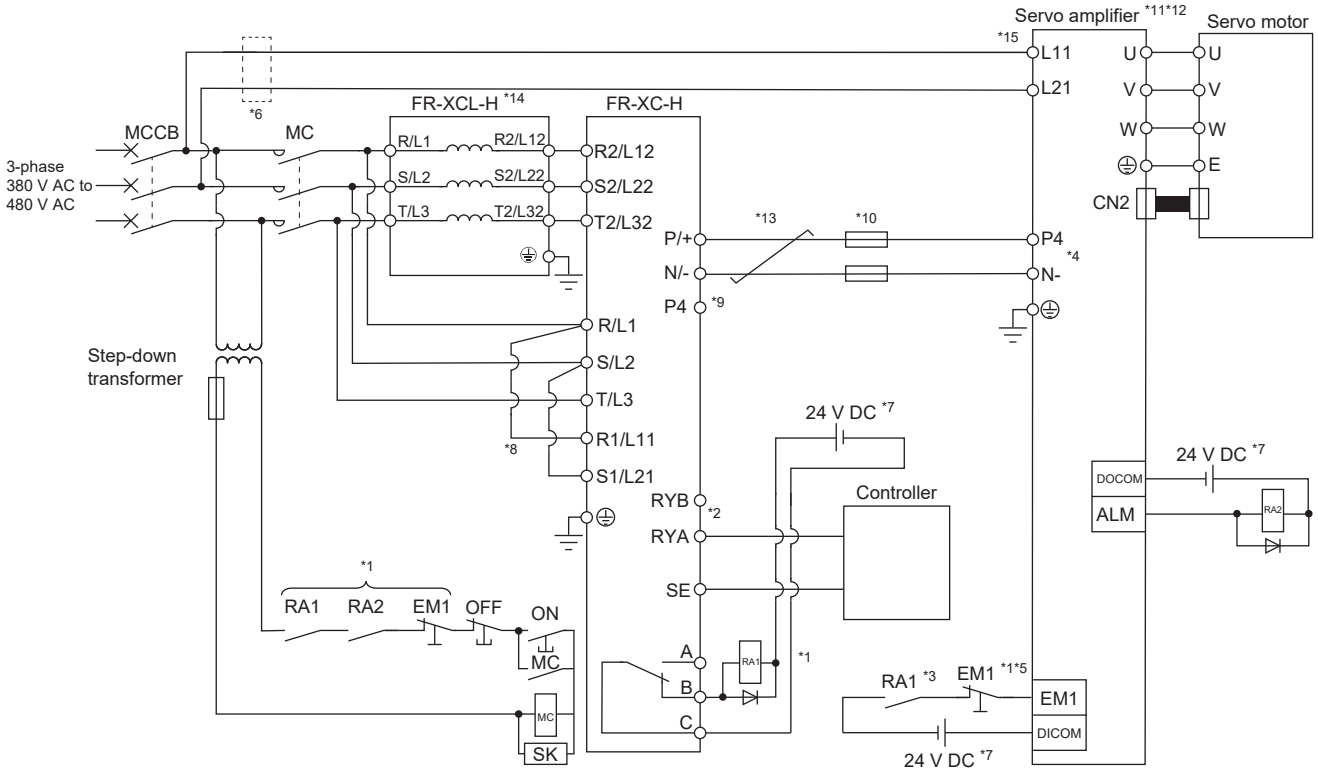

*1 Configure a sequence that shuts off the main circuit power supply in the following situations:
· When an FR-XC-H or servo amplifier alarm occurs.
· When EM1 (Forced stop 1) is enabled.

*2 Configure a sequence which will make the servo amplifier servo-on state after the FR-XC-H becomes ready.

*3 Configure a sequence which will stop the servo motor using the forced stop input to the controller when an alarm occurs on the FR-XC-H. If the controller does not have an emergency stop input, use the forced stop input of the servo amplifier to stop the servo motor.

*4 When using the FR-XC-H, remove the wire between P3 and P4.

*5 To use EM1 (Forced stop 1), set [Pr. PA04.3] and [Pr. PA04.2] to "0".

*6 If wires used for L11 and L21 are thinner than wires used for L1, L2, and L3, use a molded-case circuit breaker.

*7 Although the diagram shows the input signal and the output signal each using a separate 24 V DC power supply for illustrative purposes, the system can be configured to use a single 24 V DC power supply.

*8 Remove the R1/L11 and S1/L21 jumpers when using a dedicated power supply for the control circuit.

*9 Do not connect anything to the P4 terminal of the FR-XC-H.

*10 Install a fuse on each wire between the FR-XC-H and servo amplifier.

*11 Wire the built-in regenerative resistor when using servo amplifiers with a capacity of 7 kW or less. (Factory-wired)

*12 The inputs/outputs (main circuits) of the FR-XC-H and servo amplifier contain harmonics components, which may cause electromagnetic interference on the peripheral communication equipment. Installing a radio noise filter (FR-BIF-H) or line noise filter (FR-BSF01 or FR-BLF) can help reduce the effects of signal interference.

*13 When connecting a DC power supply between the FR-XC-H and servo amplifier, the wires should be twisted and the total length should be 5 m or less (3 m or less for compliance with EMC).

*14 When using the FR-XC-H, install the dedicated stand-alone reactor (FR-XCL-H). Do not use the power factor improving AC reactor (FRHAL-H).
☞ Page 296 Dedicated stand-alone reactor

*15 Even if the control circuit power supply is separated from the main circuit power supply using an uninterruptible power supply (UPS) or insulation transformer, do not ground L11 and L21.

Wiring and peripheral options

Wire size

Point

Selection conditions for the wire size are as follows.
Wire type: 600 V Grade heat-resistant polyvinyl chloride insulated wire (HIV wire)
Construction requirements: Single wire set in midair

■Between P/+ to P4 and N/- to N-

The following table shows the size of the wire between the FR-XC-(H) and servo amplifier.

Total capacity of servo amplifiers [kW]	Wire size [mm^2]	
	200 V class	400 V class
1 or less	2 (14 AWG)	2 (14 AWG)
2	3.5 (12 AWG)	2 (14 AWG)
3.5	5.5 (10 AWG)	3.5 (12 AWG)
5	5.5 (10 AWG)	5.5 (10 AWG)
7	8 (8 AWG)	5.5 (10 AWG)
11	14 (6 AWG)	8 (8 AWG)
15	22 (4 AWG)	8 (8 AWG)
18.5	38 (2 AWG)	8 (8 AWG)
22	50 (1/0 AWG)	14 (6 AWG)
27.5	50 (1/0 AWG)	22 (4 AWG)
30	60 (2/0 AWG)	22 (4 AWG)
37	80 (3/0 AWG)	38 (2 AWG)
45	100 (4/0 AWG)	38 (2 AWG)
55	100 (4/0 AWG)	50 (1/0 AWG)

■Grounding

The following table shows the size of the grounding wire for the FR-XC-(H). Use the shortest size wire possible.

Multifunction regeneration converter	Wire size [mm^2]	
	Rated capacity of multifunction regeneration converter ≥ Total capacity of connected servo amplifiers × 2	Rated capacity of multifunction regeneration converter < Total capacity of connected servo amplifiers × 2
FR-XC-7.5K	8 (8 AWG)	8 (8 AWG)
FR-XC-11K	8 (8 AWG)	14 (6 AWG)
FR-XC-15K	8 (8 AWG)	22 (4 AWG)
FR-XC-22K	22 (4 AWG)	38 (2 AWG)
FR-XC-30K	22 (4 AWG)	38 (2 AWG)
FR-XC-37K	38 (2 AWG)	60 (2/0 AWG)
FR-XC-55K	38 (2 AWG)	80 (3/0 AWG)
FR-XC-H7.5K	3.5 (12 AWG)	3.5 (12 AWG)
FR-XC-H11K	3.5 (12 AWG)	5.5 (10 AWG)
FR-XC-H15K	3.5 (12 AWG)	8 (8 AWG)
FR-XC-H22K	8 (8 AWG)	14 (6 AWG)
FR-XC-H30K	8 (8 AWG)	22 (4 AWG)
FR-XC-H37K	14 (6 AWG)	22 (4 AWG)
FR-XC-H55K	14 (6 AWG)	38 (2 AWG)

Wire size selection example (between P/+ and P4, between N/- and N-)

When connecting multiple servo amplifiers to the FR-XC, use junction terminal blocks for the wiring to terminals P4 and N- on the servo amplifiers. Connect the servo amplifiers in order with the largest capacity first.

■200 V class

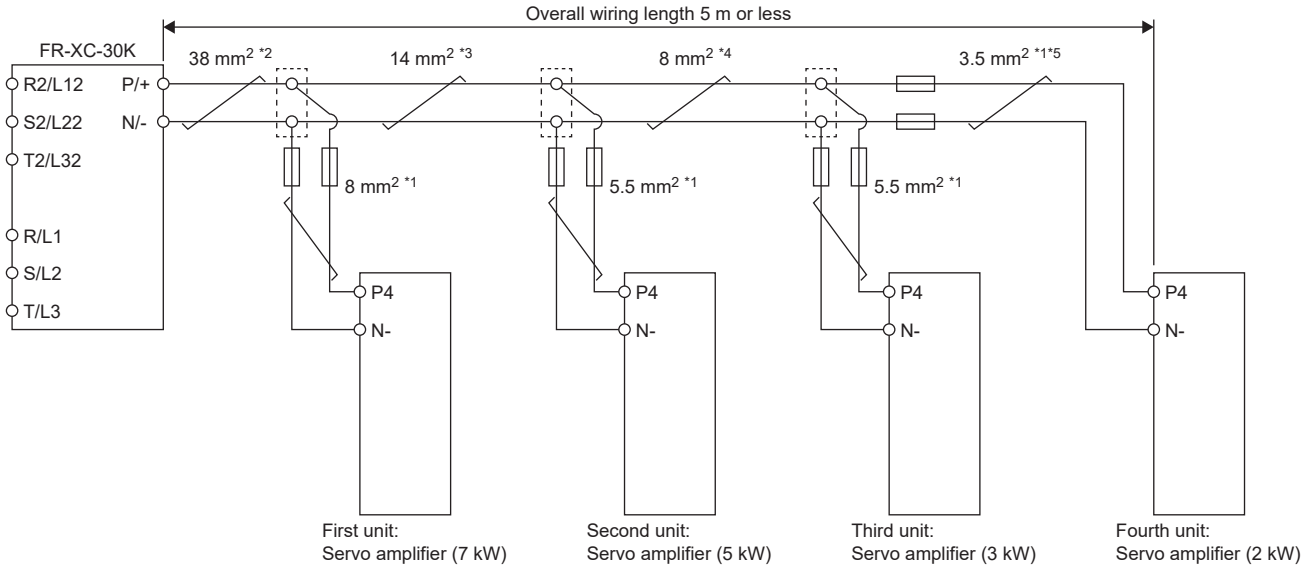

*1 Wire as short as possible.
*2 Select 38 mm^2 assuming that the total capacity of servo amplifiers is 18.5 kW since 7 kW + 5 kW + 3.5 kW + 2 kW = 17.5 kW.
*3 Select 14 mm^2 assuming that the total capacity of servo amplifiers is 11 kW since 5 kW + 3.5 kW + 2 kW = 10.5 kW.
*4 Select 8 mm^2 assuming that the total capacity of servo amplifiers is 7 kW since 3.5 kW + 2.0 kW = 5.5 kW.
*5 Select 3.5 mm^2 assuming that the total capacity of servo amplifiers is 2 kW since 2.0 kW = 2.0 kW.

■400 V class

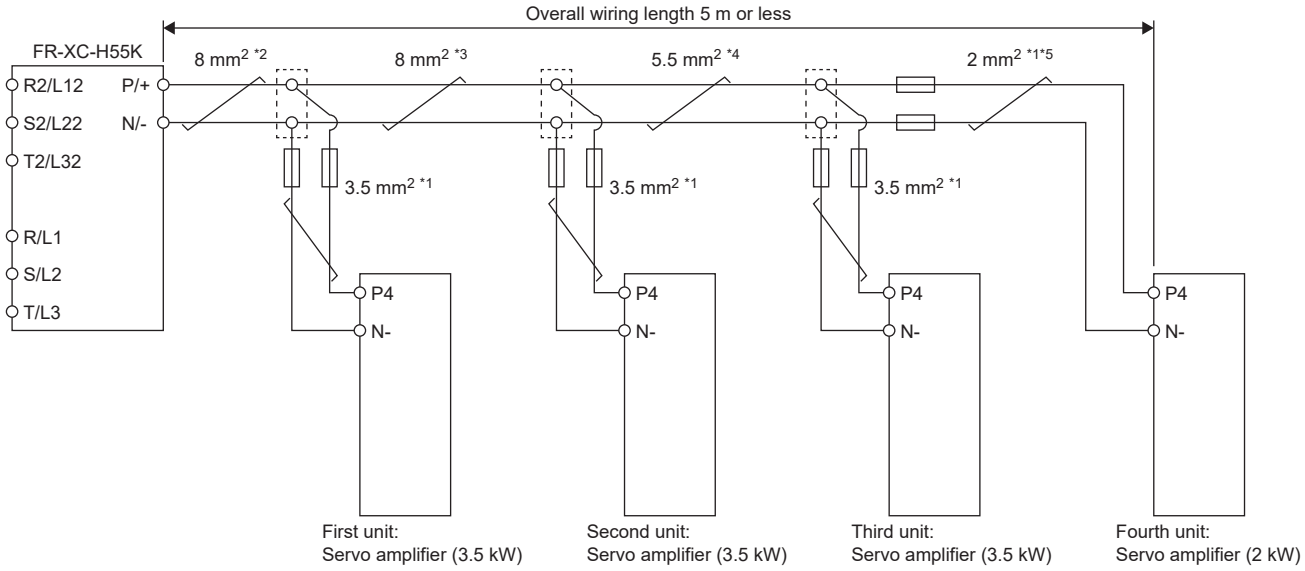

*1 Wire as short as possible.

*2 Select 8 mm^2 assuming that the total capacity of servo amplifiers is 15 kW since 3.5 kW + 3.5 kW + 3.5 kW + 2 kW = 12.5 kW.

*3 Select 8 mm^2 assuming that the total capacity of servo amplifiers is 11 kW since 3.5 kW + 3.5 kW + 2 kW = 9 kW.

*4 Select 5.5 mm^2 assuming that the total capacity of servo amplifiers is 7 kW since 3.5 kW + 2.0 kW = 5.5 kW.

*5 Select 2 mm^2 assuming that the total capacity of servo amplifiers is 2 kW since 2.0 kW = 2.0 kW.

Fuses (between P/+ and P4, between N/- and N-)

The following table shows the recommended fuses which are to be installed between the FR-XC-(H) and servo amplifier.

Servo amplifier capacity [kW]	200 V class		400 V class	
	Fuse rating [A]	Model *1	Fuse rating [A]	Model *1
0.1	20	6.900CPGR10.38 0020	—	—
0.2	20	6.900CPGR10.38 0020	—	—
0.4	25	6.900CPGR10.38 0025	—	—
0.6	25	6.900CPGR10.38 0025	20	6.900CPGR10.38 0020
0.75	30	6.900CPGR10.38 0030	—	—
1	32	6.900CPGR10.38 0032	20	6.900CPGR10.38 0020
2	63	6.9URD30TTF0063	25	6.900CPGR10.38 0025
3.5	80	6.9URD30TTF0080	63	6.9URD30TTF0063
5	160	6.9URD30TTF0160	80	6.9URD30TTF0080
7	200	6.9URD30TTF0200	100	6.9URD30TTF0100

*1 Manufacturer: Mersen Fma Japan KK
Service inquiries: Sun-wa Technos Corp.

Molded-case circuit breakers/earth-leakage current breakers and magnetic contactors

Recommended molded-case circuit breakers/earth-leakage current breakers and magnetic contactors are listed in the table below.

■200 V class

Item	FR-XC-_						
	7.5K	11K	15K	22K	30K	37K	55K
Molded-case circuit breaker or earth-leakage current breaker *1	100AF 60A (30AF 30A)	100AF 75A (50AF 50A)	225AF 125A (100AF 75A)	225AF 175A (100AF 100A)	225AF 225A (125AF 125A)	400AF 250A (125AF 125A)	400AF 400A (225AF 175A)
Magnetic contactor *1	S-T35 (S-T21)	S-T50 (S-T35)	S-T65 (S-T50)	S-T100 (S-T65)	S-N125 (S-T80)	S-N150 (S-T100)	S-N220 (S-N125)

*1 Models in parentheses can be used when the rated capacity of multifunction regeneration converter ≥ total capacity of connected servo amplifiers × 2.

■400 V class

Item	FR-XC-H_						
	7.5K	11K	15K	22K	30K	37K	55K
Molded-case circuit breaker or earth-leakage current breaker *1	30AF 30A (30AF 15A)	50AF 50A (30AF 20A)	100AF 60A (30AF 30A)	100AF 100A (50AF 50A)	225AF 125A (60AF 60A)	225AF 150A (100AF 75A)	225AF 200A (100AF 100A)
Magnetic contactor *1	S-T21	S-T25 (S-T21)	S-T35 (S-T21)	S-T50 (S-T25)	S-T65 (S-T35)	S-T80 (S-T50)	S-N125 (S-T65)

*1 Models in parentheses can be used when the rated capacity of multifunction regeneration converter ≥ total capacity of connected servo amplifiers × 2.

6.5 PS7DW-20V14B-F junction terminal block (recommended) (1-axis servo amplifier) [G] [B]

Usage

Use the junction terminal block (PS7DW-20V14B-F) with the option cable (MR-J2HBUS_M) as a set. A connection example is shown below.

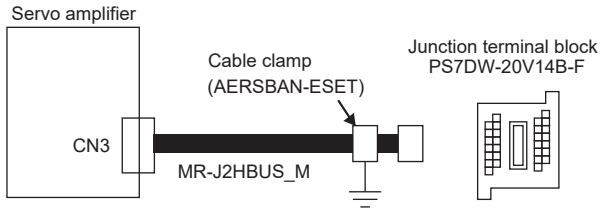

For MR-J2HBUS_M, ground the option cable on the junction terminal block side with the cable clamp fitting (AERSBAN-ESET). For the use of the cable clamp fitting, refer to the following.

☞ Page 359 Cable clamp fitting AERSBAN-_SET

Connection of MR-J2HBUS_M cable and junction terminal block

For details on I/O signals, refer to the following.

☞ Page 53 Example I/O signal connections

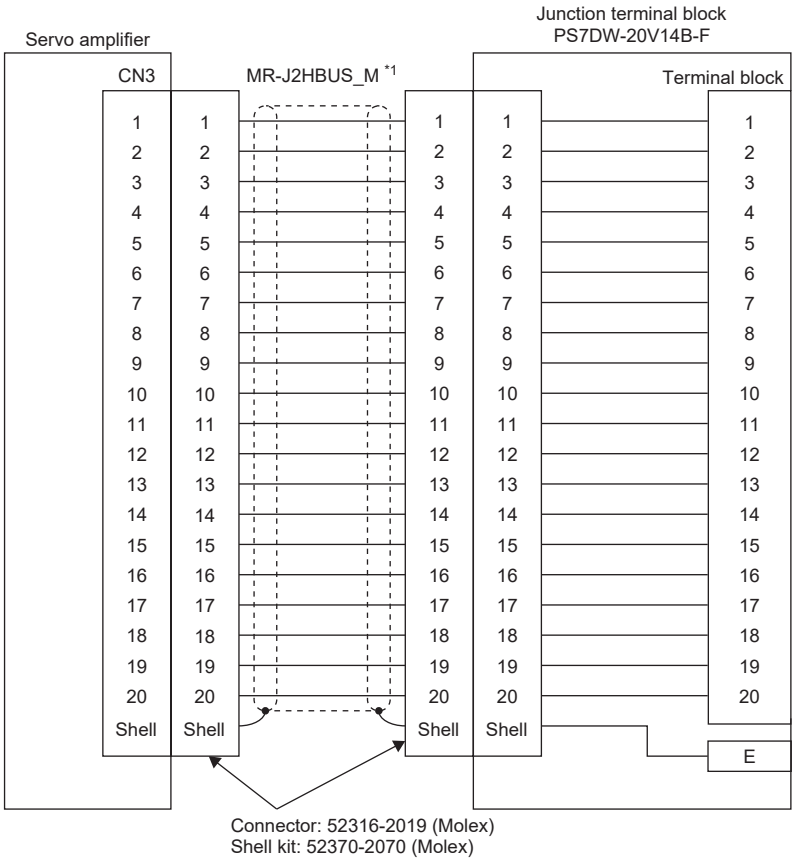

*1 Numbers in "_" indicate the cable length.
05: 0.5 m
1: 1 m
5: 5 m

Dimensions of junction terminal block

[Unit: mm]

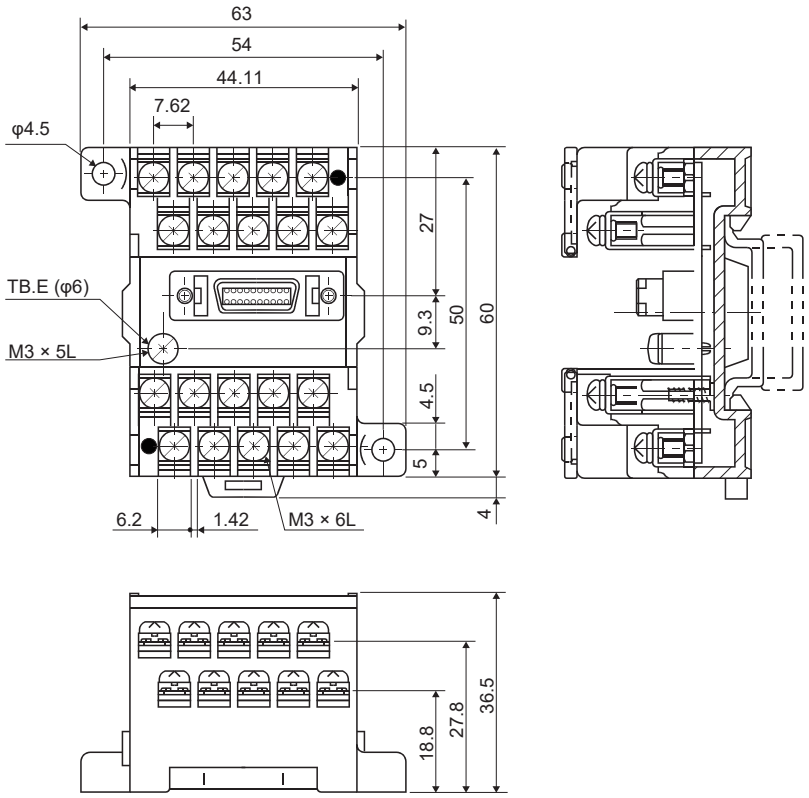

6.6 MR-TB26A junction terminal block (multi-axis servo amplifier) [G] [B]

Usage

Use the junction terminal block (MR-TB26A) with the junction terminal block cable (MR-TBNATBL_M) as a set. To use a junction terminal block, mount it to the DIN rail.

MR－TBNATBL05M

Cable length
05: 0.5 m
1: 1 m

The terminal numbers on a junction terminal block correspond with the pin numbers on the CN3 connector of a servo amplifier. The terminal symbol S is for the shield.

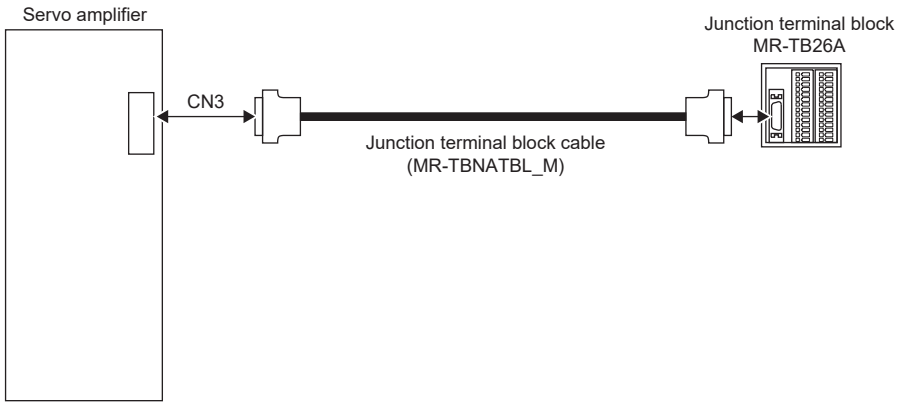

Ground the junction terminal block cable using the S terminal of the junction terminal block.

Specifications

Item		MR-TB26A
Rating		AC/DC 32 V 0.5 A
Usable wires	Stranded wire	0.08 mm^2 to 1.5 mm^2 (28 to 14 AWG)
	Solid wire	φ0.32 mm to 1.2 mm
	Wire insulator OD	φ3.4 mm or less
Tool		210-619 (WAGO) or equivalent 210-119SB (WAGO) or equivalent
Stripped length		5 mm to 6 mm

Dimensions

[Unit: mm]

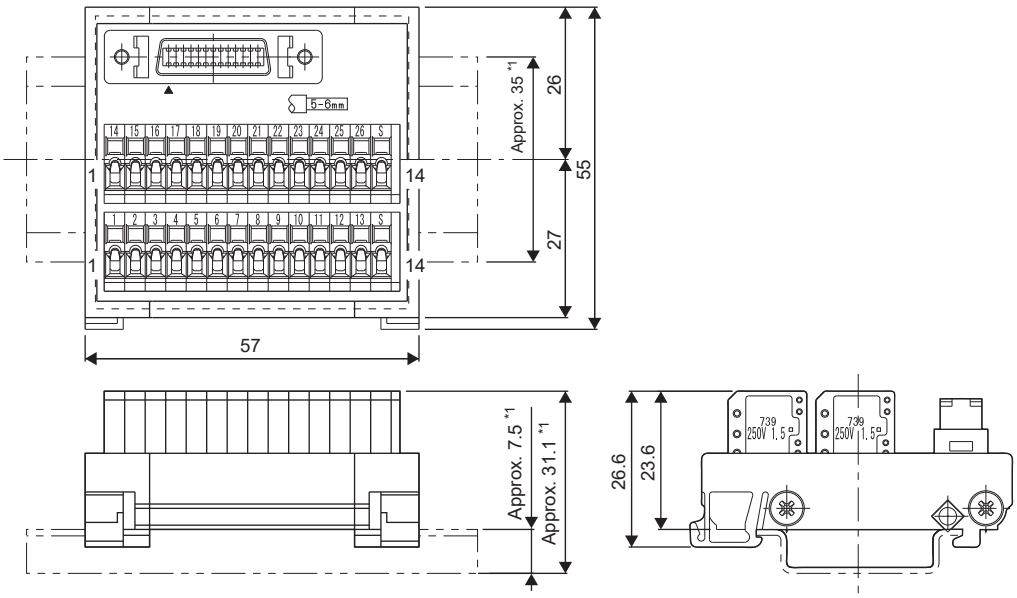

*1 Values in parentheses are the sizes when installed with a 35 mm DIN rail.

6.7 MR-TB50 junction terminal block [A]

Usage

Use the junction terminal block (MR-TB50) with the junction terminal block cable (MR-J2M-CN1TBL_M) as a set.

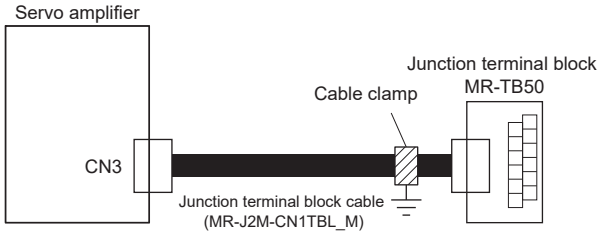

Ground the junction terminal block cable on the junction terminal block side with the supplied cable clamp fitting (AERSBAN-ESET). For the use of the cable clamp fitting, refer to the following.

☞ Page 359 Cable clamp fitting AERSBAN-_SET

Terminal block label

Use the following for the junction terminal block. The label is supplied with the junction terminal block MR-TB50.

Position control mode

P15R 1	LG 3	LAR 5	LBR 7	LZR 9	PG 11			SON 15	PC 17	RES 19	DICOM 21	ZSP 23	TLC 25	TLA 27			OP 33	NP 35			CR 41	LSP 43	LOP 45	DOCOM 47	RD 49
	LA 4	LB 6	LZ 8	PP 10	OPC 12				TL 18	DICOM 20	INP 22	INP 24		LG 28	LG 30		LG 34	NG 36			EMG 42	LSN 44	DOCOM 46	ALM 48	SD 50

Speed control mode

P15R 1	LG 3	LAR 5	LBR 7	LZR 9				SON 15	ST1 17	RES 19	DICOM 21	ZSP 23	TLC 25	TLA 27			OP 33				SP1 41	LSP 43	LOP 45	DOCOM 47	RD 49
VC 2	LA 4	LB 6	LZ 8					SP2 16	ST2 18	DICOM 20	SA 22	SA 24		LG 28	LG 30		LG 34				EMG 42	LSN 44	DOCOM 46	ALM 48	SD 50

Torque control mode

P15R 1	LG 3	LAR 5	LBR 7	LZR 9				SON 15	SR2 17	RES 19	DICOM 21	ZSP 23	VLC 25	TC 27			OP 33				SP1 41		LOP 45	DOCOM 47	RD 49
VLA 2	LA 4	LB 6	LZ 8					SP2 16	RS1 18	DICOM 20				LG 28	LG 30		LG 34				EMG 42		DOCOM 46	ALM 48	SD 50

Dimensions

[Unit: mm]

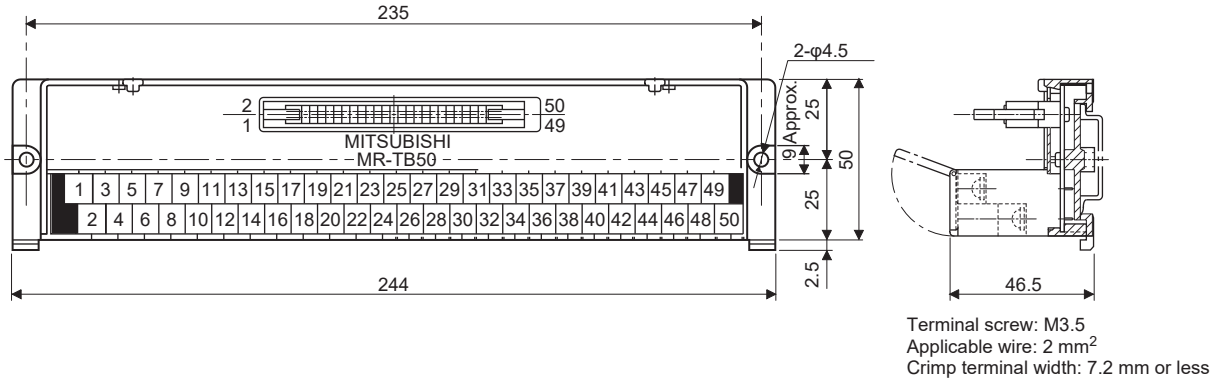

Terminal screw: M3.5
Applicable wire: 2 mm^2
Crimp terminal width: 7.2 mm or less

Junction terminal block cable MR-J2M-CN1TBL_M

■Model explanations

Model: M R - J 2 M - C N 1 T B L _ M

Symbol	Cable length [m]
05	0.5
1	1

6.8 MR Configurator2

Engineering tool

MR Configurator2 (SW1DNC-MRC2-_) can be used with this servo amplifier.
For the engineering tool specifications and system configuration, refer to the installation guide of the engineering tool.

Precautions for using USB communication function and Ethernet communication function

Note the following to prevent an electric shock or malfunction of the servo amplifier.

Connecting the power of a personal computer

Connect the power of a personal computer with the following procedure.

■When using a personal computer with an AC power supply

- When using a personal computer with a three-core power plug or a power plug with a grounding wire, use a three-pin socket or ground the grounding wire.
- When your personal computer has a two-core power plug and has no grounding wire, connect the personal computer to the servo amplifier with the following procedure.

1. Disconnect the power plug of the personal computer from the AC power socket.
2. Check that the power plug of the personal computer has been disconnected from the AC power socket, then connect the personal computer to the servo amplifier.
3. Connect the power plug of the personal computer to the AC power socket.

- When using a personal computer with battery

The computer can be used as it is.

■Connection with other devices using servo amplifier communication function

When the servo amplifier is charged with electricity due to connection with a personal computer and the charged servo amplifier is connected with other devices, the servo amplifier or the connected devices may malfunction. Connect the servo amplifier and other devices with the following procedure.

1. Shut off the power of the device to be connected with the servo amplifier.
2. Shut off the power of the servo amplifier that was connected with the personal computer, and check that the charge light is off.
3. Connect the device with the servo amplifier.
4. Turn on the power of the servo amplifier and the connected device.

6.9 Battery

Point

- Unlock and then pull out the battery or other option that is connected to the CN4 connector.
- For battery transportation and the new EU Battery Directive, refer to "COMPLIANCE WITH GLOBAL STANDARDS" in User's Manual (Introduction).

Use a battery when connecting a direct drive motor to configure an absolute position detection system. For configuration of an absolute position detection system, refer to the following.

☞ Page 412 ABSOLUTE POSITION DETECTION SYSTEM

Whether the battery is required or not depends on the system to be constructed. Refer to the following table.

- Whether the battery is required or not [G] [A]

Motor side	Semi closed loop control system	Fully closed loop control system	
		Load side	
		Battery-less absolute position encoder	Linear encoder
Servomotor with battery-less absolute position encoder	Not required	Not required	Not required
Direct drive motor	Required *1	Required *2	Required *2
Linear encoder	Not required	Not supported	Not supported

*1 The absolute position storage unit (MR-BTAS01) is required.

*2 When [Pr. PL01.0 Servo motor magnetic pole detection selection] is set to "0" (Magnetic pole detection disabled), the absolute position storage unit (MR-BTAS01) is required. However, when [Pr. PL01.0] is set to "1" (Magnetic pole detection at initial servo-on after cycling the power or communication reset) or "5" (Magnetic pole detection at every servo-on), the battery and absolute position storage unit (MR-BTAS01) are not required.

- Whether the battery is required or not [B]

Motor side	Semi closed loop control system	Fully closed loop control system	
		Load side	
		Battery-less absolute position encoder	Linear encoder
Servomotor with battery-less absolute position encoder	Not required	Not required	Not required
Direct drive motor	Required *1	Not supported	Not supported
Linear encoder	Not required	Not supported	Not supported

*1 The absolute position storage unit (MR-BTAS01) is required.

Selection of battery

Applicable batteries differ depending on servo amplifiers. Select a proper battery.

Applications of the batteries

Model	Name	Application	Built-in battery
MR-BAT6V1SET MR-BAT6V1SET-A	Battery	For absolute position data backup	MR-BAT6V1
MR-BT6VCASE	Battery case	For absolute position data backup of multi-axis servo motor	MR-BAT6V1

Combination of battery and servo amplifier

Model	MR-J5-_G_	MR-J5-_B_	MR-J5-_A_	MR-J5W_-_G_	MR-J5W_-_B_
MR-BAT6V1SET	○	○	○	×	×
MR-BAT6V1SET-A	○	○	○	×	×
MR-BT6VCASE	○	○	○	○	○

MR-BAT6V1SET battery

Point

• For the specifications and the date of manufacture of the built-in MR-BAT6V1 battery, refer to the following.
☞ Page 324 MR-BAT6V1 battery

Parts identification and dimensions

[Unit: mm]

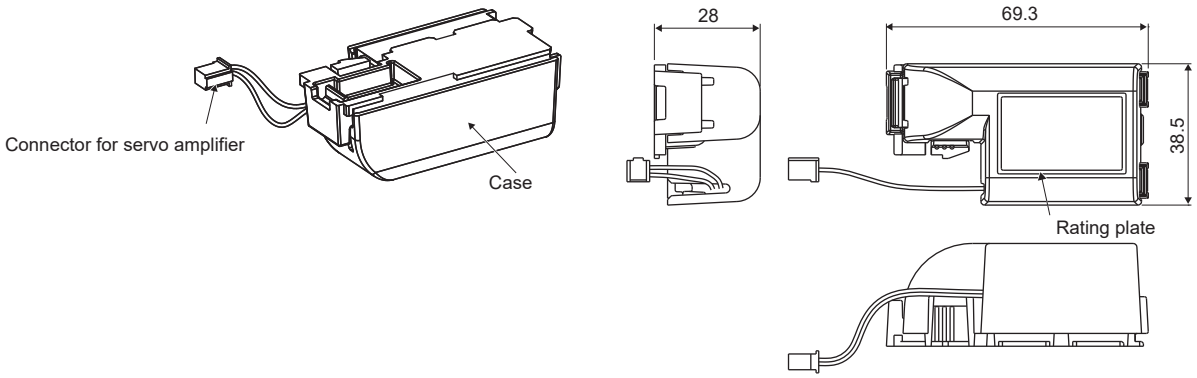

Mass: 55 [g] (including the MR-BAT6V1 battery)

Battery connection

Connect as follows.

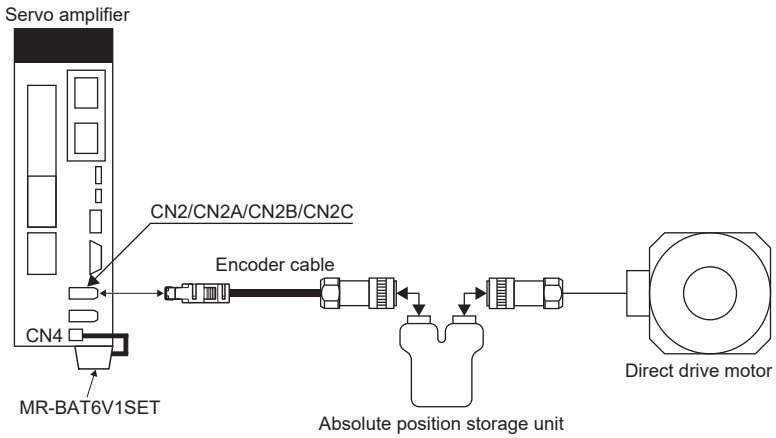

Battery replacement procedure

Replace the battery while only the control circuit power supply is on. Replacing the battery with the control circuit power supply on triggers [AL. 09F.1 Low battery]. However, the absolute position data will not be erased.

Precautions

Turn off the power and wait for 15 minutes or more until the charge light of the servo amplifier turns off. Checking the voltage between P+ and N- using the tester, etc. is recommended.

The servo amplifier may be damaged by static electricity. Take the following precautions.

- Ensure that the work bench and your body are grounded.
- Do not directly touch conductive areas such as the connector pins and electrical parts.

Replacing batteries with the control circuit power supply off will erase the absolute position data.

Before replacing batteries, check that the new battery is within battery life.

■Battery installation and removal procedure

- Fitting method

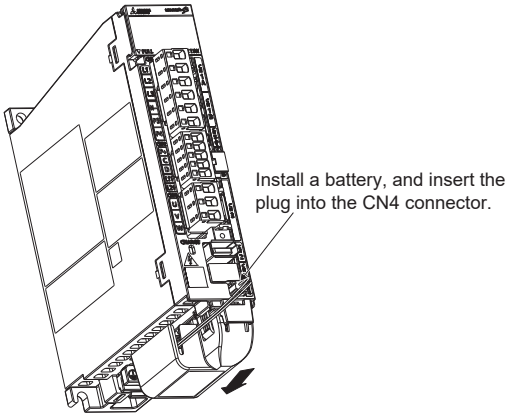

- Removal procedure

Precautions

- Pulling out the connector of the battery without the lock release lever pressed may damage the CN4 connector of the servo amplifier or the connector of the battery.

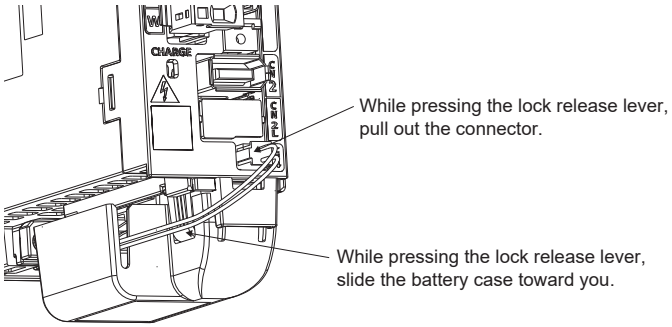

Replacing the built-in battery

When the MR-BAT6V1SET reaches the end of its service life, replace the built-in MR-BAT6V1 battery.

1. While pressing the locking part, open the cover.

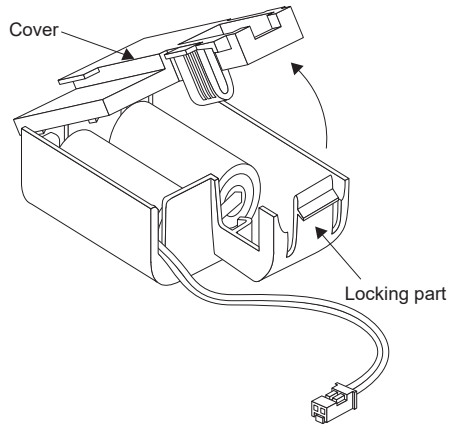

2. Replace the battery with a new MR-BAT6V1 battery.

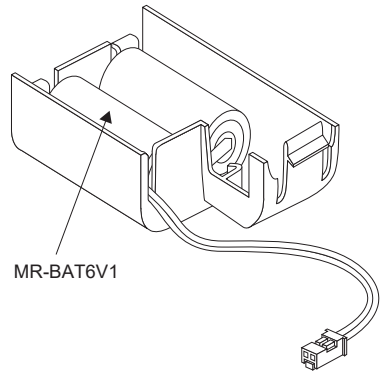

3. Press the cover until it is fixed with the projection of the locking part to close the cover.

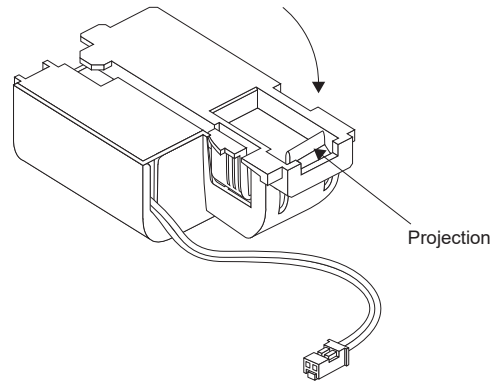

MR-BAT6V1SET-A battery

Point

• For the specifications and the date of manufacture of the built-in MR-BAT6V1 battery, refer to the following.
☞ Page 324 MR-BAT6V1 battery

Parts identification and dimensions

[Unit: mm]

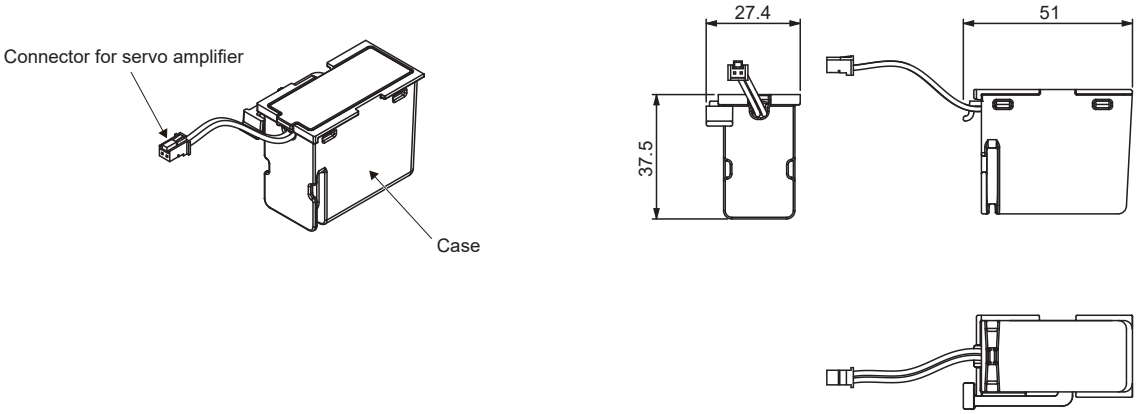

Mass: 55 [g] (including the MR-BAT6V1 battery)

Battery connection

Connect as follows.

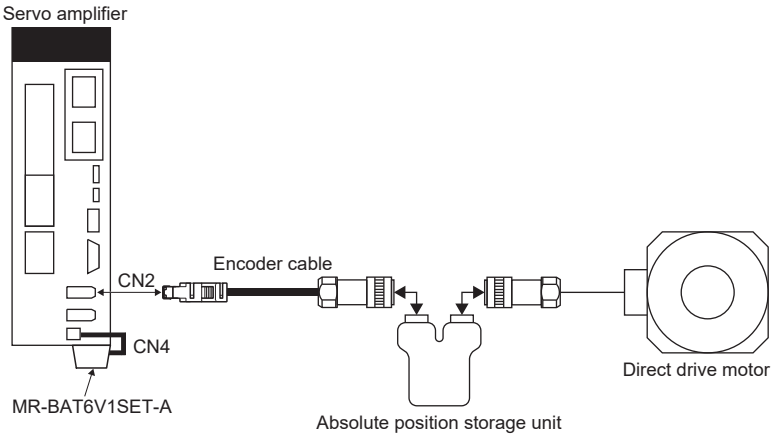

Battery replacement procedure

Replace the battery while only the control circuit power supply is on. Replacing the battery with the control circuit power supply on triggers [AL. 09F.1 Low battery]. However, the absolute position data will not be erased.

■Precautions

Turn off the power and wait for 15 minutes or more until the charge light of the servo amplifier turns off. Checking the voltage between P+ and N- using the tester, etc. is recommended.

The servo amplifier may be damaged by static electricity. Take the following precautions.

- Ensure that the work bench and your body are grounded.
- Do not directly touch conductive areas such as the connector pins and electrical parts.

Replacing batteries with the control circuit power supply off will erase the absolute position data.

Before replacing batteries, check that the new battery is within battery life.

■Battery installation and removal procedure

- Fitting method

Point

Servo amplifiers with a battery holder on the bottom cannot have wiring for grounding when batteries are mounted. Mount the battery after grounding the servo amplifier.

Mount a battery, and insert the plug into the CN4 connector.

- Removal procedure

Precautions

- Pulling out the connector of the battery without the lock release lever pressed may damage the CN4 connector of the servo amplifier or the connector of the battery.

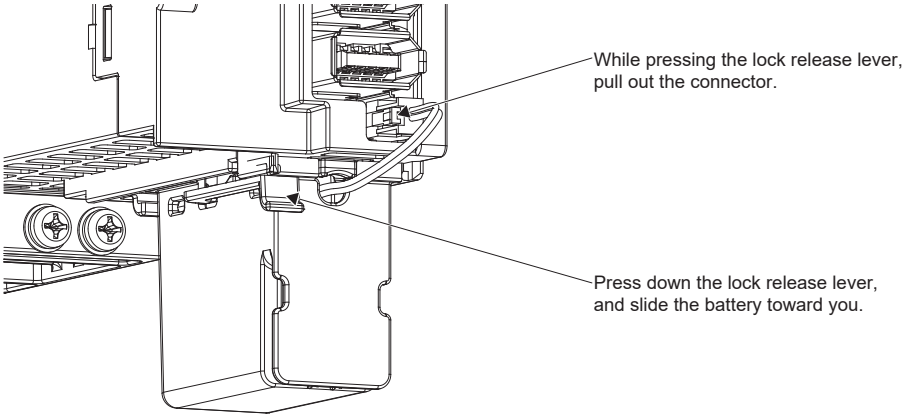

Replacing the built-in battery

When the MR-BAT6V1SET-A reaches the end of its service life, replace the built-in MR-BAT6V1 battery.

1. While pressing the locking part, open the cover.

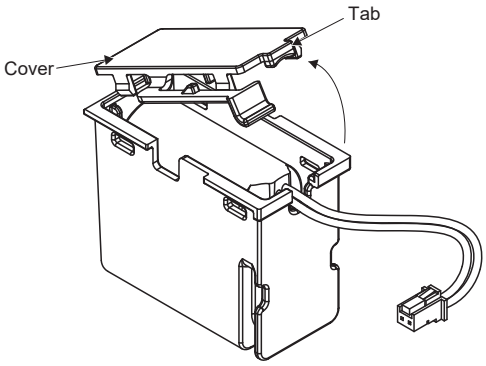

2. Replace the battery with a new MR-BAT6V1 battery.

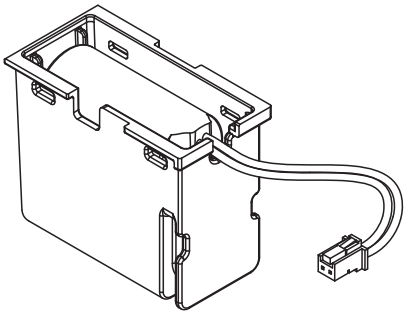

3. Press the cover until it is fixed with the projection of the locking part to close the cover.

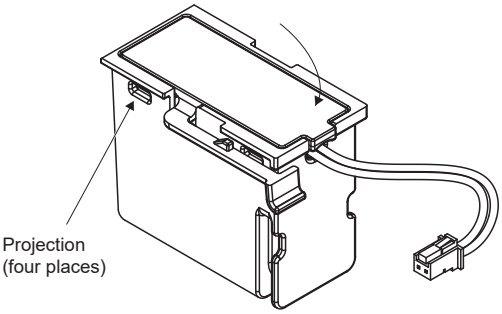

MR-BT6VCASE battery case

Point

The battery unit consists of an MR-BT6VCASE battery case and five MR-BAT6V1 batteries.
For the specifications and the date of manufacture of the MR-BAT6V1 battery, refer to the following.
☞ Page 324 MR-BAT6V1 battery

MR-BT6VCASE is a case used for connecting and mounting five MR-BAT6V1 batteries. No batteries are included in the battery case. Prepare MR-BAT6V1 batteries separately.

Number of connectable servo motors

One MR-BT6VCASE can hold the absolute position data of up to four axes of direct drive motors. Direct drive motors in the incremental system are included as the axis numbers. Linear servo motors are not counted as the axis numbers.

Dimensions

[Unit: mm]

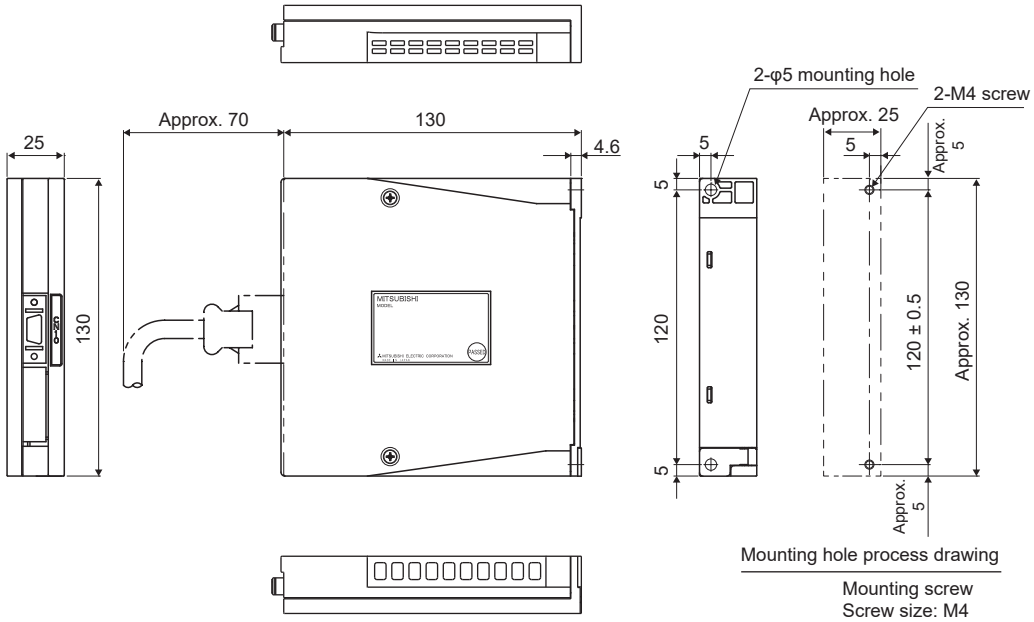

Mass: 0.18 [kg]

Battery connection

■When using 1-axis servo amplifier

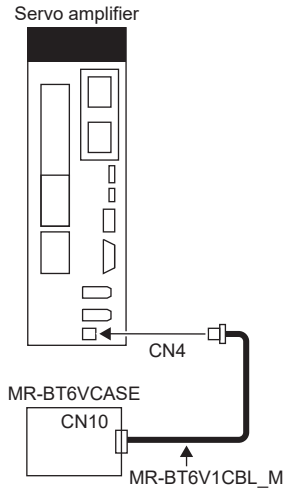

■When using up to 4-axis servo amplifiers

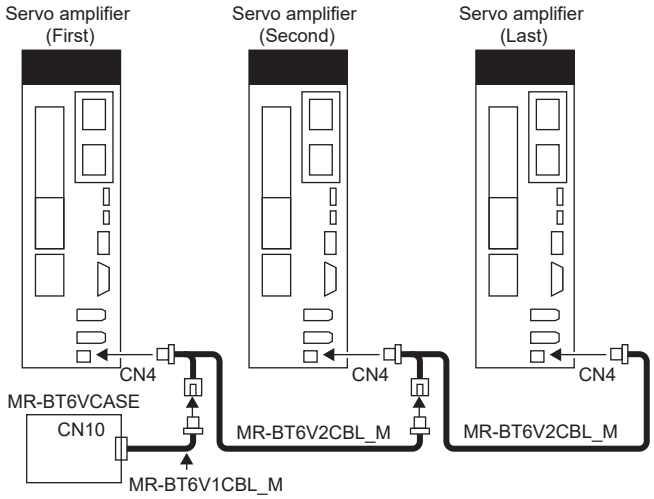

Battery replacement procedure

Point

Replacing batteries with the control circuit power supply off will erase the absolute position data.
Before replacing batteries, check that the new battery is within battery life.

Replace the battery while only the control circuit power supply is on. Replacing the battery with the control circuit power supply on triggers [AL. 09F.1 Low battery]. However, the absolute position data will not be erased.

■Assembly of the battery unit

Point

- Replace all the batteries with new ones at the same time at battery replacement.
- Install five MR-BAT6V1 batteries to the MR-BT6VCASE battery case.

- Things to be prepared

Product name	Model	Quantity	Remark
Battery case	MR-BT6VCASE	1	MR-BT6VCASE is a case used for connecting and mounting five MR-BAT6V1 batteries.
Battery	MR-BAT6V1	5	Lithium battery (primary battery, nominal + 6 V)

• Disassembly and assembly of the battery case MR-BT6VCASE

Disassembly of the case

MR-BT6VCASE is shipped assembled. To mount MR-BAT6V1 batteries, the case needs to be disassembled.

1. Remove the two screws using a Phillips head screwdriver.

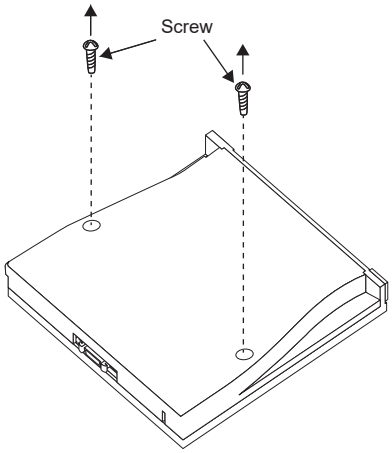

2. Remove the cover.

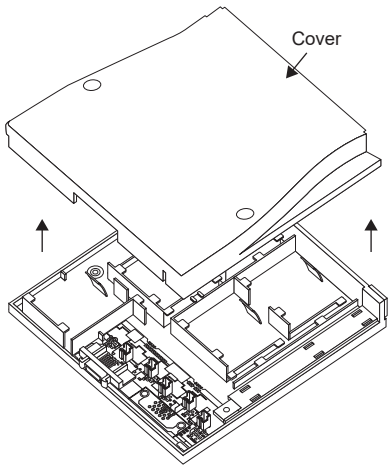

Parts identification

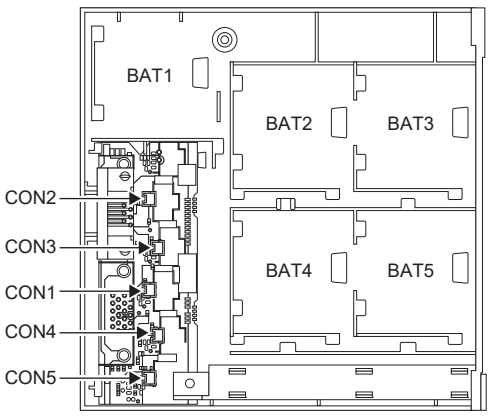

Mounting MR-BAT6V1

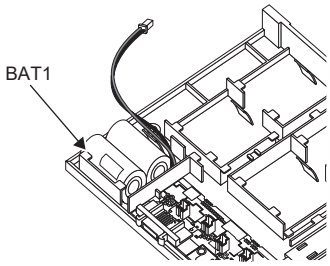

1. Securely mount an MR-BAT6V1 to the BAT1 holder.

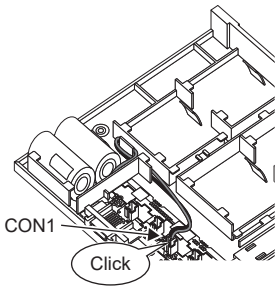

2. Insert the MR-BAT6V1 connector mounted on the BAT1 holder to CON1.

Confirm the click sound at this point.

The connector has to be connected in the right direction.

If the connector is pushed forcefully in the incorrect direction, the connector will break.

Place the MR-BAT6V1 lead wire in the duct designed to store lead wires.

Insert MR-BAT6V1 to the holder in the same procedure in the order from BAT2 to BAT5.

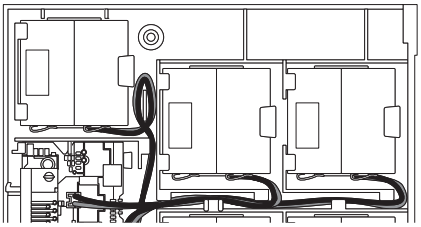

3. Bring out the lead wire from the space between the ribs, and bend the wire as shown in the figure to store the wire in the duct.
Connect the lead wire to the connector.

Be careful not to get the lead wire caught in the case or other parts.
When the lead wire is damaged, external short circuit may occur, and the battery can become hot.

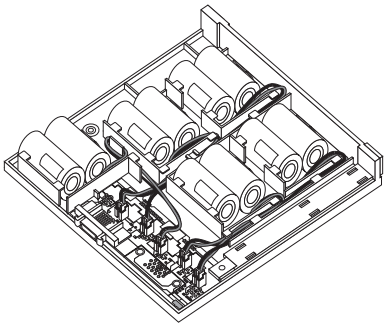

Assembly of the case

After all MR-BAT6V1 batteries are mounted, fit the cover and insert screws into the two holes and tighten them. Tightening torque is 0.71 N•m.

Point

Be careful not to trap the lead wires when installing the screws and re-installing the cover.

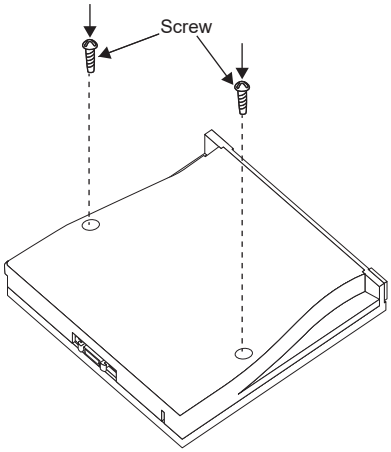

Precautions for removal of battery

The connector attached to the MR-BAT6V1 battery has the lock release lever. When removing the connector, pull out the connector while pressing the lock release lever.

- Battery cable removal

Precautions

- Pulling out the connector of the MR-BT6V1CBL and MR-BT6V2CBL without the lock release lever pressed may damage the CN4 connector of the servo amplifier or the connector of the MR-BT6V1CBL or MR-BT6V2CBL.

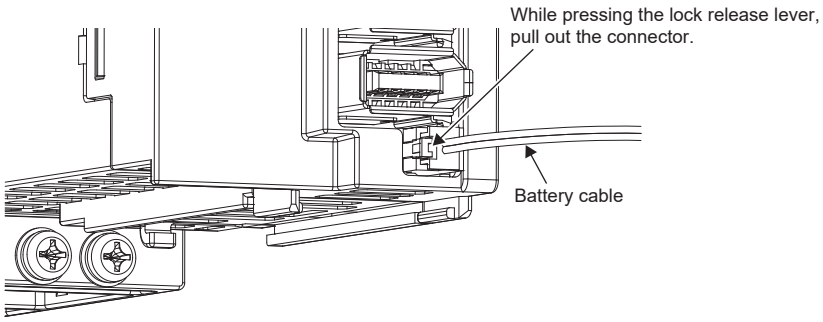

MR-BAT6V1 battery

The MR-BAT6V1 lithium primary battery is for MR-BAT6V1SET-A and MR-BT6VCASE. Store the MR-BAT6V1 in the case to use.

The date of manufacture of the MR-BAT6V1 battery is indicated on the battery label.

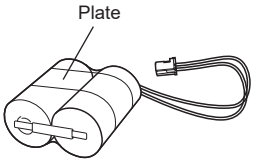

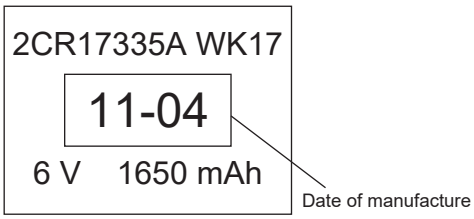

Item	Description
Battery pack	2CR17335A (CR17335A × 2 pcs. connected in series)
Nominal voltage [V]	6
Nominal capacity [mAh]	1650
Storage temperature [°C]	0 to 55
Operating temperature [°C]	0 to 55
Lithium content [g]	1.2
Mercury content	Less than 1 ppm
Dangerous goods class	Not subject to the dangerous goods (Class 9) For details, refer to "Handling of AC servo amplifier batteries for the United Nations Recommendations on the Transport of Dangerous Goods" in User's Manual (Introduction).
Operating humidity and storage humidity	5 %RH to 90 %RH (non-condensing)
Battery life *1	Five years after the date of manufacture
Mass [g]	34

*1 Quality of the batteries degrades by the storage condition. The battery life is 5 years from the date of manufacture regardless of the connection status.

Battery cable and junction battery cable

Model explanations

The numbers in the cable length field of the table indicate the symbol filling the underline "_" in the cable model. The cables of the lengths with the numbers are available.

Cable model	Cable length		Flex life	Application/remark
	0.3 m	1 m		
MR-BT6V1CBL_M	03	1	Standard	For connecting to MR-BT6VCASE
MR-BT6V2CBL_M	03	1	Standard	For junction

MR-BT6V1CBL_M

■Appearance

Figure	Components	Description
	(1) Cable	VSVC 7/0.18 × 2C
	(2) Connector	Housing: PAP-02V-O Contact: SPHD-001G-P0.5 (JST)
	(3) Connector	Connector: 10114-3000PE Shell kit: 10314-52F0-008 (3M or equivalent)

■Internal wiring diagram

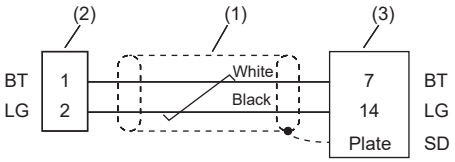

MR-BT6V2CBL_M

■Appearance

Figure	Components	Description
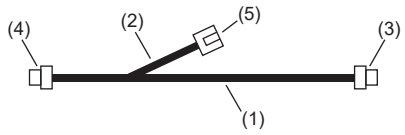	(1) Cable	VSVC 7/0.18 × 2C
	(2) Cable	
	(3) Connector	Housing: PAP-02V-O Contact: SPHD-001G-P0.5 (JST)
	(4) Connector	
	(5) Connector	Housing: PALR-02VF-O Contact: SPAL-001GU-P0.5 (JST)

■Internal wiring diagram

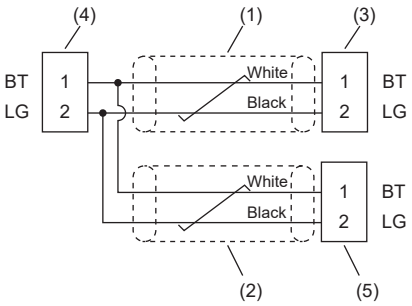

6.10 Selection example of wires

Point

To comply with the IEC/EN/UL/CSA standard for wiring, use the wires described in the MR-J5 Safety Instructions and Precautions for AC Servos (IB(NA)-0300391). To comply with other standards, use wires that comply with each standard.
Selection conditions for the wire size are as follows.
Construction requirements: Single wire set in midair
Wiring length: 30 m or less

The following shows the wires used for wiring. Use the wires given in this section or equivalent wires.
For the MR-CM simple converter wiring, refer to the following.
☞ Page 294 I/O wires
For the FR-XC-(H) multifunction regeneration converter wiring, refer to the following.
☞ Page 300 Wiring and peripheral options

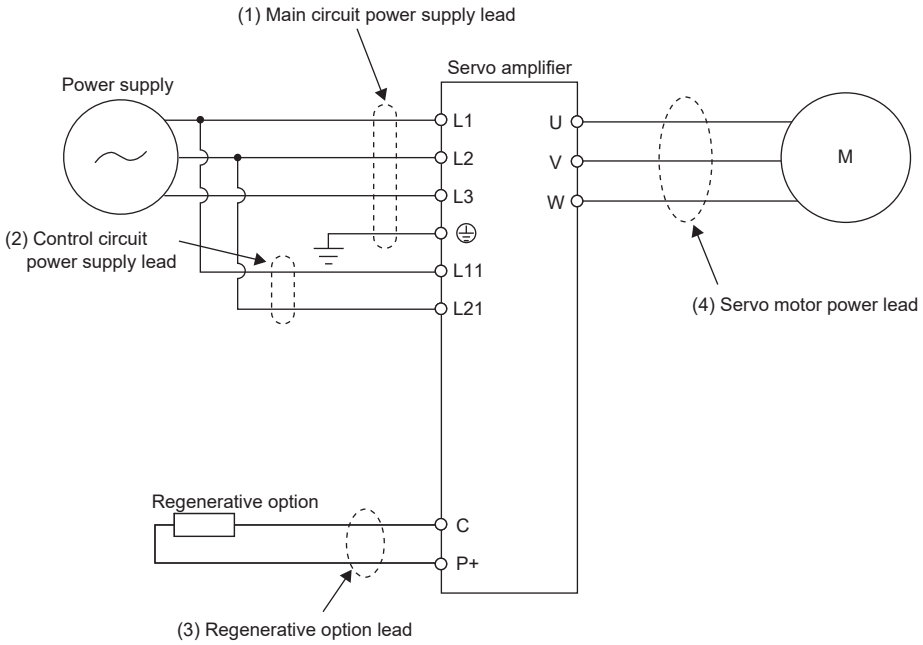

Wire size selection examples

Use 600 V Grade heat-resistant polyvinyl chloride insulated wires (HIV wires) for wiring. The following shows the wire size selection examples.

The wire size can be selected in accordance with the rated input of the servo motor used.

For some combinations of servo amplifiers and servo motors, thinner wires than the ones listed in the table can be used.

■200 V class

Servo amplifier	Wire [mm^2] *1			
	(1) L1/L2/L3/⏚	(2) L11/L21	(3) P+/C	(4) U/V/W/E *3
MR-J5-10_	2 (14 AWG): a	1.25 to 2 (16 to 14 AWG) *2	2 (14 AWG)	0.75 to 2 (18 to 14 AWG)
MR-J5-20_				
MR-J5-40_				
MR-J5-60_				
MR-J5-70_				
MR-J5-100_				
MR-J5-200_ (3-phase power supply input)				0.75 to 5.5 (18 to 10 AWG)
MR-J5-200_ (1-phase power supply input)	3.5 (12 AWG): b			
MR-J5-350_				
MR-J5-500_	5.5 (10 AWG): c			0.75 to 8 (18 to 8 AWG)
MR-J5-700_	8 (8 AWG): d			
MR-J5W2-22_	2 (14 AWG): a	2 (14 AWG)		0.75 to 2 (18 to 14 AWG)
MR-J5W2-44_				
MR-J5W2-77_	2 (14 AWG): a			
MR-J5W2-1010_	2 (14 AWG): a			
MR-J5W3-222_	2 (14 AWG): a			
MR-J5W3-444_	2 (14 AWG): a			

*1 The alphabetical letters in the table indicate the symbols of the selection example of crimp terminals.
☞ Page 328 Selection example of crimp terminals

*2 Use the size of 2 mm^2 for compliance with the IEC/EN/UL/CSA standard.

*3 The wire size shows applicable size of the servo amplifier connector and terminal block. For wires connecting to the servo motor, refer to the user's manual of each servo motor.

■400 V class

Servo amplifier	Wire [mm^2] *1			
	(1) L1/L2/L3/⏚	(2) L11/L21	(3) P+/C	(4) U/V/W/E *3
MR-J5-60_4_	2 (14 AWG): a	1.25 to 2 (16 to 14 AWG) *2	2 (14 AWG)	0.75 to 2 (18 to 14 AWG)
MR-J5-100_4_				
MR-J5-200_4_				
MR-J5-350_4_				
MR-J5-500_4_	2 (14 AWG): a	1.25 to 2 (16 to 14 AWG) *2	2 (14 AWG)	0.5 to 10 (20 to 8 AWG)
MR-J5-700_4_	3.5 (12 AWG): b	1.25 to 2 (16 to 14 AWG) *2	2 (14 AWG)	0.5 to 10 (20 to 8 AWG)

*1 The alphabetical letters in the table indicate the symbols of the selection example of crimp terminals.
☞ Page 328 Selection example of crimp terminals

*2 Use the size of 2 mm^2 for compliance with the IEC/EN/UL/CSA standard.

*3 The wire size shows applicable size of the servo amplifier connector and terminal block. For wires connecting to the servo motor, refer to the user's manual of each servo motor.

■Using servo amplifier with DC power supply input

The wire selection example is the same as that for the AC power supply input.

Selection example of crimp terminals

Precautions

• Crimp terminals are used only for ground wiring.

Symbol	Servo amplifier-side crimp terminal		Manufacturer
	Crimp terminal	Applicable tool	
a	R2-4	YHT-2210	JST
b	3.5-R4	YHT-2210	
c	R5.5-4	YHT-2210	
d	8-4NS, R8-5	YHT-8S, YA-4	

6.11 Molded-case circuit breakers, fuses, magnetic contactors

When using a fuse instead of the molded-case circuit breaker, use the one having the specifications given in this section.

Precautions

- Select the molded-case circuit breakers specified in this section.
- Wire the molded-case circuit breaker and magnetic contactor as recommended.

Selection example

For main circuit power supply (1-axis servo amplifier)

■200 V class

Servo amplifier	Molded-case circuit breaker *1			Fuse			Magnetic contactor *2
	Frame, rated current		Voltage AC [V]	Class	Current [A]	Voltage AC [V]	
	Power factor improving reactor is not used	Power factor improving reactor is used					
MR-J5-10_	30 to 125 A frame 5 A	30 to 125 A frame 5 A	240	T	10	300	S-T10
MR-J5-20_	30 to 125 A frame 5 A	30 to 125 A frame 5 A					
MR-J5-40_	30 to 125 A frame 10 A	30 to 125 A frame 5 A			15		
MR-J5-60_	30 to 125 A frame 15 A	30 to 125 A frame 10 A			20		
MR-J5-70_	30 to 125 A frame 15 A	30 to 125 A frame 10 A					
MR-J5-100_ (3-phase power supply input)	30 to 125 A frame 15 A	30 to 125 A frame 10 A					
MR-J5-100_ (1-phase power supply input)	30 to 125 A frame 15 A	30 to 125 A frame 15 A			30		
MR-J5-200_	30 to 125 A frame 20 A	30 to 125 A frame 20 A			40		S-T10 S-T21
MR-J5-350_	30 to 125 A frame 30 A	30 to 125 A frame 30 A			70		S-T21
MR-J5-500_	50 to 125 A frame 50 A	50 to 125 A frame 50 A			125		S-T25 S-T35
MR-J5-700_	100 to 125 A frame 75 A	60 to 125 A frame 60 A			150		S-T35 S-T50

*1 Refer to the following page for compliance with IEC/EN/UL/CSA standards.
☞ Page 338 Example settings that comply with IEC/EN/UL 61800-5-1 and CSA C22.2 No.274

*2 Use the magnetic contactor with an operation delay time (interval between current being applied to the coil until closure of contacts) of 80 ms or less.

■400 V class

Servo amplifier	Molded-case circuit breaker *1			Fuse			Magnetic contactor *2
	Frame, rated current		Voltage AC [V]	Class	Current [A]	Voltage AC [V]	
	Power factor improving reactor is not used	Power factor improving reactor is used					
MR-J5-60_4_	30 to 125 A frame 5 A	30 to 125 A frame 5 A	480	T	10	600	S-T10
MR-J5-100_4_	30 to 125 A frame 10 A	30 to 125 A frame 5 A			15		
MR-J5-200_4_	30 to 125 A frame 15 A	30 to 125 A frame 10 A			25		
MR-J5-350_4_	30 to 125 A frame 20 A	30 to 125 A frame 15 A			35		S-T21
MR-J5-500_4_	30 to 125 A frame 20 A	30 to 125 A frame 20 A			50		
MR-J5-700_4_	30 to 125 A frame 30 A	30 to 125 A frame 30 A			65		

*1 Refer to the following page for compliance with IEC/EN/UL/CSA standards.
☞ Page 338 Example settings that comply with IEC/EN/UL 61800-5-1 and CSA C22.2 No.274

*2 Use the magnetic contactor with an operation delay time (interval between current being applied to the coil until closure of contacts) of 80 ms or less.

A Motor circuit breaker (Type E combination motor controller) can also be used instead of a molded-case circuit breaker. The Motor circuit breaker (Type E combination motor controller) is the product combined with the motor circuit breaker, the short-circuit indicator unit UT-TU, and the line side terminal adapter UT-CV3. Motor circuit breakers (Type E combination motor controllers) cannot be used with 400 V class servo amplifiers.

Servo amplifier	Rated input voltage AC [V]	Input phase *2	Motor circuit breaker (Type E combination motor controller)			SCCR [kA] *1
			Model	Rated voltage AC [V]	Rated current [A] (heater design)	
MR-J5-10_	200 to 240	3-phase	MMP-T32	240	1.6	50
MR-J5-20_					2.5	
MR-J5-40_					4	
MR-J5-60_					6.3	
MR-J5-70_					6.3	
MR-J5-100_					8	
MR-J5-200_					18	
MR-J5-350_					25	25
MR-J5-500_					32	

*1 The values of the SCCR vary depending on the combination with the servo amplifier.

*2 1-phase input is not supported.

For main circuit power supply (multi-axis servo amplifier)

■MR-J5W2-_

Total output of rotary servo motors	Total continuous thrust of linear servo motors	Total output of direct drive motors	Molded-case circuit breaker *1*3		Fuse			Magnetic contactor *2
			Frame, Rated current	Voltage AC [V]	Class	Current [A]	Voltage AC [V]	
300 W or less	—	—	30 to 125 A frame 5 A	240	T	15	300	S-T10
From over 300 W to 600 W	150 N or less	100 W or less	30 to 125 A frame 10 A			20		
Over 600 W 1 kW or less	From over 150 N to 300 N	From over 100 W to 252 W	30 to 125 A frame 15 A			20		
Over 1 kW 2 kW or less	From over 300 N to 720 N	From over 252 W to 838 W	30 to 125 A frame 20 A			30		S-T21

*1 To comply with the IEC/EN/UL/CSA standards, refer to the MR-J5 Safety Instructions and Precautions for AC Servos (IB(NA)-0300391) for selection of molded-case circuit breakers and fuses.
*2 Use the magnetic contactor with an operation delay time (interval between current being applied to the coil until closure of contacts) of 80 ms or less.
*3 The molded-case circuit breaker is the same regardless of whether a power factor improving AC reactor is used.

■MR-J5W3-_

Total output of rotary servo motors	Total continuous thrust of linear servo motors	Total output of direct drive motors	Molded-case circuit breaker *1*3		Fuse			Magnetic contactor *2
			Frame, Rated current	Voltage AC [V]	Class	Current [A]	Voltage AC [V]	
450 W or less	150 N or less	—	30 to 125 A frame 10 A	240	T	20	300	S-T10
From over 450 W to 800 W	From over 150 N to 300 N	252 W or less	30 to 125 A frame 15 A			20		
From over 800 W to 1.5 kW	From over 300 N to 450 N	From over 252 W to 378 W	30 to 125 A frame 20 A			30		S-T21

*1 To comply with the IEC/EN/UL/CSA standards, refer to the MR-J5 Safety Instructions and Precautions for AC Servos (IB(NA)-0300391) for selection of molded-case circuit breakers and fuses.
*2 Use the magnetic contactor with an operation delay time (interval between current being applied to the coil until closure of contacts) of 80 ms or less.
*3 The molded-case circuit breaker is the same regardless of whether a power factor improving AC reactor is used.

A Motor circuit breaker (Type E combination motor controller) can also be used instead of a molded-case circuit breaker. The Motor circuit breaker (Type E combination motor controller) is the product combined with the motor circuit breaker, the short-circuit indicator unit UT-TU, and the line side terminal adapter UT-CV3.

Servo amplifier	Rated input voltage AC [V]	Input phase	Motor circuit breaker (Type E combination motor controller)			SCCR [kA]
			Model	Rated voltage AC [V]	Rated current [A] (heater design)	
MR-J5W2-22_	200 to 240	3-phase	MMP-T32	240	6.3	50
MR-J5W2-44_					8	
MR-J5W2-77_					13	
MR-J5W2-1010_					18	
MR-J5W3-222_					8	
MR-J5W3-444_					13	

For control circuit power supply

When the wiring for the control circuit power supply (L11/L21) is thinner than that for the main circuit power supply (L1/L2/L3), install an overcurrent protection device (molded-case circuit breaker, fuse, etc.) to protect the branch circuit.

■200 V class

Servo amplifier	Molded-case circuit breaker *1		Fuse (Class T)		Fuse (Class K5)	
	Frame, rated current	Voltage AC [V]	Current [A]	Voltage AC [V]	Current [A]	Voltage AC [V]
MR-J5-10_	30 A frame 5 A	240	1	300	1	250
MR-J5-20_						
MR-J5-40_						
MR-J5-60_						
MR-J5-70_						
MR-J5-100_						
MR-J5-200_						
MR-J5-350_						
MR-J5-500_						
MR-J5-700_						
MR-J5W2-22_						
MR-J5W2-44_						
MR-J5W2-77_						
MR-J5W2-1010_						
MR-J5W3-222_						
MR-J5W3-444_						

*1 To comply with the IEC/EN/UL/CSA standards, refer to the MR-J5 Safety Instructions and Precautions for AC Servos (IB(NA)-0300391) for selection of molded-case circuit breakers and fuses.

■400 V class

Servo amplifier	Molded-case circuit breaker *1		Fuse (Class T)		Fuse (Class K5)	
	Frame, rated current	Voltage AC [V]	Current [A]	Voltage AC [V]	Current [A]	Voltage AC [V]
MR-J5-60_4_	30 A frame 5 A	480	1	600	1	600
MR-J5-100_4_						
MR-J5-200_4_						
MR-J5-350_4_						
MR-J5-500_4_						
MR-J5-700_4_						

*1 To comply with the IEC/EN/UL/CSA standards, refer to the MR-J5 Safety Instructions and Precautions for AC Servos (IB(NA)-0300391) for selection of molded-case circuit breakers and fuses.

Using servo amplifier with DC power supply input

When using a fuse instead of the molded-case circuit breaker, use the one having the specifications given in this section.

■For main circuit power supply (1-axis servo amplifier)

Servo amplifier	Molded-case circuit breaker			Fuse			Magnetic contactor *1
	Frame, rated current		Voltage AC [V]	Class	Current [A]	Voltage DC [V]	
	Power factor improving reactor is not used	Power factor improving reactor is used					
MR-J5-10_	30 A frame 5 A	30 A frame 5 A	240	T	10	400	DUD-N30
MR-J5-20_	30 A frame 5 A	30 A frame 5 A					
MR-J5-40_	30 A frame 10 A	30 A frame 5 A			15		
MR-J5-60_	30 A frame 15 A	30 A frame 10 A			20		
MR-J5-70_	30 A frame 15 A	30 A frame 10 A					
MR-J5-100_ (3-phase power supply input)	30 A frame 15 A	30 A frame 10 A					
MR-J5-100_ (1-phase power supply input)	30 A frame 15 A	30 A frame 15 A					
MR-J5-200_	30 A frame 20 A	30 A frame 20 A			30		
MR-J5-350_	30 A frame 30 A	30 A frame 30 A			40		
MR-J5-500_	50 A frame 50 A	50 A frame 50 A			60		DUD-N60
MR-J5-700_	100 A frame 75 A	60 A frame 60 A			80		

*1 Use the magnetic contactor with an operation delay time (interval between current being applied to the coil until closure of contacts) of 80 ms or less.

■For main circuit power supply (multi-axis servo amplifier)

• MR-J5W2-_

Total output of rotary servo motors	Total continuous thrust of linear servo motors	Total output of direct drive motors	Molded-case circuit breaker		Fuse			Magnetic contactor *1
			Frame, Rated current	Voltage AC [V]	Class	Current [A]	Voltage AC [V]	
300 W or less	—	—	30 A frame 5 A	240	T	15	400	DUD-N30
Over 300 W 600 W or less	150 N or less	100 W or less	30 A frame 10 A			20		
Over 600 W 1 kW or less	Over 150 N 300 N or less	Over 100 W 252 W or less	30 A frame 15 A			20		
Over 1 kW 2 kW or less	Over 300 N 720 N or less	Over 252 W 838 W or less	30 A frame 20 A			30		

*1 Use the magnetic contactor with an operation delay time (interval between current being applied to the coil until closure of contacts) of 80 ms or less.

• MR-J5W3-_

Total output of rotary servo motors	Total continuous thrust of linear servo motors	Total output of direct drive motors	Molded-case circuit breaker		Fuse			Magnetic contactor *1
			Frame, Rated current	Voltage AC [V]	Class	Current [A]	Voltage AC [V]	
450 W or less	150 N or less	—	30 A frame 10 A	240	T	20	400	DUD-N30
Over 450 W 800 W or less	Over 150 N 300 N or less	252 W or less	30 A frame 15 A			20		
Over 800 W 1.5 kW or less	Over 300 N 450 N or less	Over 252 W 378 W or less	30 A frame 20 A			30		

*1 Use the magnetic contactor with an operation delay time (interval between current being applied to the coil until closure of contacts) of 80 ms or less.

■For control circuit power supply

When the wiring for the control circuit power supply (L11/L21) is thinner than that for the main circuit power supply (L1/L2/L3/N-), install an overcurrent protection device (fuse, etc.) to protect the branch circuit.

Servo amplifier	Fuse (Class T)		Fuse (Class K5)	
	Current [A]	Voltage DC [V]	Current [A]	Voltage DC [V]
MR-J5-10_	1	400	1	400
MR-J5-20_				
MR-J5-40_				
MR-J5-60_				
MR-J5-70_				
MR-J5-100_				
MR-J5-200_				
MR-J5-350_				
MR-J5W2-_				
MR-J5W3-_				

Driving on/off of main circuit power supply with DC power supply (1-axis servo amplifier)

Use the magnetic contactor with an operation delay time (interval between current being applied to the coil until closure of contacts) of 80 ms or less.

Servo amplifier	Magnetic contactor
MR-J5-10_ to MR-J5-100_	SD-T12
MR-J5-200_/MR-J5-350_	SD-T21
MR-J5-500_	SD-T35
MR-J5-700_	SD-T50
MR-J5-60_4_ to MR-J5-200_4_	SD-T12
MR-J5-350_4_	SD-T21
MR-J5-500_4_/MR-J5-700_4_	SD-T21

Driving on/off of main circuit power supply with DC power supply (multi-axis servo amplifier)

Use the magnetic contactor with an operation delay time (interval between current being applied to the coil until closure of contacts) of 80 ms or less.

■MR-J5W2-_

Total output of rotary servo motors	Total continuous thrust of linear servo motors	Total output of direct drive motors	Magnetic contactor
300 W or less	—	—	SD-T12
From over 300 W to 600 W	150 N or less	100 W or less	
From over 600 W to 1 kW	From over 150 N to 300 N	From over 100 W to 252 W	
From over 1 kW to 2 kW	From over 300 N to 720 N	From over 252 W to 838 W	SD-T21

■MR-J5W3-_

Total output of rotary servo motors	Total continuous thrust of linear servo motors	Total output of direct drive motors	Magnetic contactor
450 W or less	150 N or less	—	SD-T12
From over 450 W to 800 W	From over 150 N to 300 N	252 W or less	
From over 800 W to 1.5 kW	From over 300 N to 450 N	From over 252 W to 378 W	SD-T21

Main circuit wiring (connecting multiple servo amplifiers to one molded-case circuit breaker)

When connecting multiple servo amplifiers to one molded-case circuit breaker for reasons such as the ease of installing a molded-case circuit breaker (MCCB) into a cabinet or the cost efficiency, check that the following requirements are satisfied before starting the servo system.
The number of servo amplifiers that can be connected to the molded-case circuit breaker is based on the wires to be connected to the molded-case circuit breaker, and can be checked by referring to the operation characteristics of the molded-case circuit breaker and the sum of the inrush currents of the servo amplifiers.
The check procedure is as follows.

1. Selecting a wire (thickness)

When connecting multiple servo amplifiers, determine the wire thickness based on the total current, which is calculated by multiplying the rated input currents of the servo amplifiers by the coefficient (125 %).

$$\text{Total current of multiple servo amplifiers [A]} = 1.25 \sum_{k=1}^{n} \text{Servo amplifier k [A]}$$

1.25 (125 %) is the coefficient based on UL 508A. For NFPA79, the coefficient is 1.15 (115 %). The coefficient varies depending on the selection conditions and standards.
The permissible current for the wire (insulated conductor) varies depending on the usage conditions (ambient temperature, number of wires bundled, and others).
If the selection result is a wire that is too thick to be wired to the servo amplifier, multiple servo amplifiers cannot be connected to one molded-case circuit breaker. Reduce the number of servo amplifiers until the wire size is acceptable for the servo amplifier, or install a molded-case circuit breaker separately.

2. Selecting a molded-case circuit breaker

Select a molded-case circuit breaker whose permissible current is equal to or less than the permissible current of the wire selected in "Selecting a wire (thickness)".
Note that a molded-case circuit breaker whose rated current is greater than the permissible current of the wire cannot be selected. Doing so may cause the wire to burn.

3. Checking the number of servo amplifiers to connect to the molded-case circuit breaker

Check that the sum of the inrush currents of the servo amplifiers to be connected is equal to or smaller than six times the rated current of the molded-case circuit breaker.

4. Selecting a magnetic contactor (MC)

Select a magnetic contactor based on the permissible current for the selected wire.
Configure a system so that the magnetic contactor is shut off by an alarm output of the connected servo amplifiers.

Related supplementary information

■Permissible current of wire

The following table shows permissible currents of wire based on Table 28.1 of UL 508A and Table 40.3 of UL 508C.
The permissible current values listed in this table are for when the number of wires bundled is three or less. When the number of wires bundled is four to six, the permissible current values are 80 % of the values in the table.

• Permissible currents of copper wire (insulated conductor)

Wire size			60 °C (140 °F)	75 °C (167 °F)
AWG	Actual cross-sectional area [mm^2]	Nominal cross-sectional area [mm^2]	[A]	[A]
14	2.1	2	15	15
12	3.3	3.5	20	20
10	5.3	5.5	30	30
8	8.4	8	40	50
6	13.3	14	55	65
4	21.2	22	70	85
2	33.6	38	95	115
1	42.4	—	110	130

■Rated input current of servo amplifier

The following table shows the 3-phase rated input currents and maximum wire sizes for the MR-J5 series.

• 3-phase rated input currents, inrush currents, and maximum wire sizes for servo amplifiers

Model	Input current [A]	Inrush current [A]	Maximum AWG
MR-J5-10_	0.9	17	14
MR-J5-20_	1.5	17	14
MR-J5-40_	2.6	17	14
MR-J5-60_	3.2	17	14
MR-J5-70_	3.8	17	14
MR-J5-100_	5	17	14
MR-J5-200_	10.5	24	14
MR-J5-350_	16	85	12
MR-J5-500_	21.7	42	10
MR-J5-700_	28.9	85	8
MR-J5W2-22_	2.9	23	14
MR-J5W2-44_	5.2	23	14
MR-J5W3-222_	4.3	23	14
MR-J5W3-444_	7.8	23	14
MR-J5W2-77_	7.5	36	14
MR-J5W2-1010_	9.8	36	14
MR-J5-60_4_	1.4	16	14
MR-J5-100_4_	2.5	16	14
MR-J5-200_4_	5.1	22	14
MR-J5-350_4_	7.9	72	14
MR-J5-500_4_	10.8	50	14
MR-J5-700_4_	14.4	55	12

■Molded-case circuit breakers (MCCB) and magnetic contactors (MC)

The following tables show lists of rated currents for the Mitsubishi Electric UL 489 Listed molded-case circuit breakers and for magnetic contactors.

• List of rated currents for molded-case circuit breakers (MCCB)

Model	Rated voltage AC [V]	Rated current [A] *1
NF125-SVU	480	15, 20, 30, 40, 50, 60, (70), 75, (80), (90), 100, 125

*1 For molded-case circuit breakers that support the current values enclosed in brackets "( )" in the rated current column, contact your local sales office.

• List of rated currents for magnetic contactors (MC)

MS-T series	Frame	T10	T12	T20	T21	T25	N35	N50	N65	N80	N125
AC-3 class [kW/A]	220 V	2.2	2.7	3.7	4	5.5	7.5	11	15	19	30
	440 V	2.7	4	7.5	7.5	11	15	22	30	37	60
Thermal current [A]		20	20	20	32	32	60	80	100	120	150

Example settings that comply with IEC/EN/UL 61800-5-1 and CSA C22.2 No.274

The molded-case circuit breakers, semiconductor fuses, and recommended wire gauges in the tables are selections based on the rated I/O of the servo amplifier.

Molded-case circuit breaker/Semiconductor fuse

■200 V class

Servo amplifier	Molded-case circuit breaker (240 V AC) SCCR 50 kA	Semiconductor fuse (700 V) SCCR 100 kA (Bussmann)
MR-J5-10_	NF125-SVU-15A (125 A frame 15 A)	170M1408 (10 A)
MR-J5-20_		
MR-J5-40_		
MR-J5-60_ (3-phase power supply input)		
MR-J5-60_ (1-phase power supply input)		170M1409 (16 A)
MR-J5-70_ (3-phase power supply input)		170M1408 (10 A)
MR-J5-70_ (1-phase power supply input)		170M1409 (16 A)
MR-J5-100_ (3-phase power supply input)		
MR-J5-100_ (1-phase power supply input)		170M1412 (32 A)
MR-J5-200_ (3-phase power supply input)		
MR-J5-200_ (1-phase power supply input)	NF125-SVU-20A (125 A frame 20 A)	170M1413 (40 A)
MR-J5-350_		
MR-J5-500_	NF125-SVU-30A *1 (125 A frame 30 A)	170M1415 (63 A)
MR-J5-700_	NF125-SVU-40A *1 (125 A frame 40 A)	170M1416 (80 A)
MR-J5W2-22_ (3-phase power supply input)	NF125-SVU-15A (125 A frame 15 A)	170M1408 (10 A)
MR-J5W2-22_ (1-phase power supply input)		170M1409 (16 A)
MR-J5W2-44_ (3-phase power supply input)		
MR-J5W2-44_ (1-phase power supply input)		170M1412 (32 A)
MR-J5W2-77_ (3-phase power supply input)		
MR-J5W2-77_ (1-phase power supply input)	NF125-SVU-20A (125 A frame 20 A)	170M1413 (40 A)
MR-J5W2-1010_	NF125-SVU-15A (125 A frame 15 A)	170M1412 (32 A)
MR-J5W3-222_ (3-phase power supply input)		170M1409 (16 A)
MR-J5W3-222_ (1-phase power supply input)	NF125-SVU-15A (125 A frame 15 A)	170M1412 (32 A)
MR-J5W3-444_ (3-phase power supply input)		
MR-J5W3-444_ (1-phase power supply input)	NF125-SVU-20A (125 A frame 20 A)	170M1413 (40 A)

*1 When using it under the UL LISTED authentication conditions, select a semiconductor fuse.

■400 V class

Servo amplifier	Molded-case circuit breaker (480 V AC) SCCR 30 kA	Semiconductor fuse (700 V) SCCR 100 kA (Bussmann)
MR-J5-60_4_	NF125-SVU-15A *1 (125 A frame 15 A)	170M1408 (10 A)
MR-J5-100_4_		
MR-J5-200_4_	NF125-SVU-15A *1 (125 A frame 15 A)	170M1409 (16 A)
MR-J5-350_4_	NF125-SVU-15A *1 (125 A frame 15 A)	170M1412 (32 A)
MR-J5-500_4_	NF125-SVU-20A *1 (125 A frame 20 A)	170M1413 (40 A)
MR-J5-700_4_	NF125-SVU-30A *1 (125 A frame 30 A)	170M1414 (50 A)

*1 When using it under the UL LISTED authentication conditions, select a semiconductor fuse.

Recommended wire

■200 V class

Servo amplifier	75 °C Stranded wire [AWG]			
	L1/L2/L3/⏚	L11/L21	P+/C	U/V/W/E
MR-J5-10_	14	14	14	14
MR-J5-20_				
MR-J5-40_				
MR-J5-60_				
MR-J5-70_				
MR-J5-100_				
MR-J5-200_ (3-phase power supply input)				
MR-J5-200_ (1-phase power supply input)	12			
MR-J5-350_				12
MR-J5-500_	10			8
MR-J5-700_	8			
MR-J5W2-22_	14			14
MR-J5W2-44_				
MR-J5W2-1010_				
MR-J5W2-77_				
MR-J5W3-222_				
MR-J5W3-444_				

■400 V class

Servo amplifier	75 °C Stranded wire [AWG]			
	L1/L2/L3/⏚	L11/L21	P+/C	U/V/W/E
MR-J5-60_4_	14	14	14	14
MR-J5-100_4_				
MR-J5-200_4_				
MR-J5-350_4_				
MR-J5-500_4_				12
MR-J5-700_4_	12			10

Molded-case circuit breaker/Semiconductor fuse (simple converter)

Simple converter	Total servo amplifier capacity	Molded-case circuit breaker (240 V AC) SCCR 50 kA		Semiconductor fuse (700 V) SCCR 100 kA (Bussmann)	Magnetic contactor	
		Frame, rated current	Voltage AC [V]		AC power supply	DC power supply
MR-CM3K	Less than 2 kW	NF125-SUV-15A (125 A frame 15 A)	240	170M1409 (16 A)	S-T21	SD-T21
	2 kW or more	NF125-SUV-20A (125 A frame 20 A)	240	170M1413 (40 A)		

Recommended wire (simple converter)

Simple converter	75 °C Stranded wire [AWG]	
	L1/L2/L3/⏚	P4/N-
MR-CM3K	14 /12 *1	14 /12 *1

*1 Wire sizes differ depending on the total current of the connected servo amplifiers. Use 12 AWG wire if the total current exceeds 12 A.

6.12 Power factor improving DC reactor

Advantages

- It improves the power factor by increasing the form factor of the servo amplifier's input current.
- It decreases the power supply capacity.
- The input power factor is improved to about 85 %.
- As compared to the power factor improving AC reactor (FR-HAL-(H)), it decreases the loss.

Restrictions

When connecting the power factor improving DC reactor to the servo amplifier, disconnect P3 and P4. If it remains connected, the effect of the power factor improving DC reactor is not produced.

When used, the power factor improving DC reactor generates heat. To dissipate heat, therefore, maintain a minimum clearance of 10 cm each at the top and bottom, and 5 cm at the sides.

200 V class

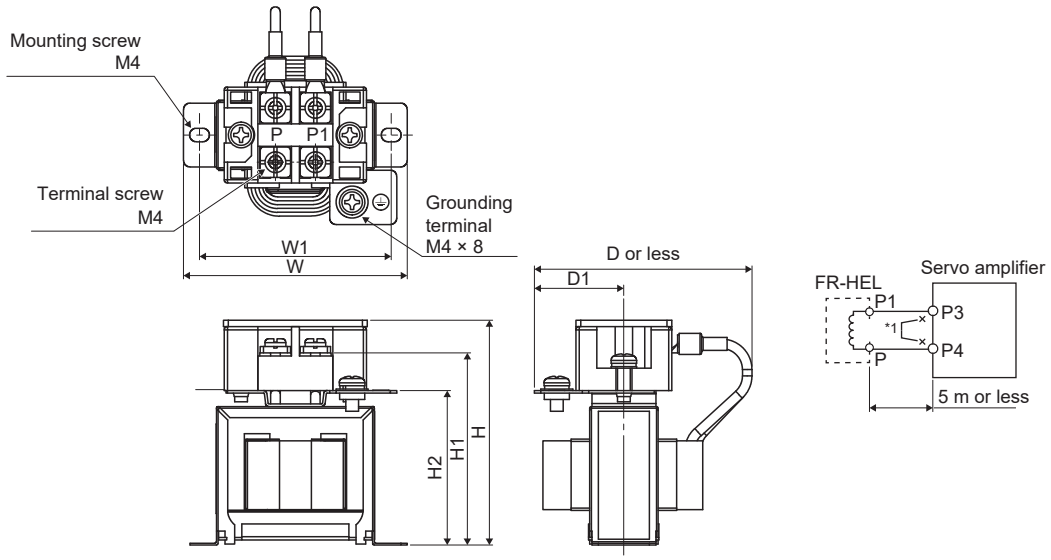

Servo amplifier	Power factor improving DC reactor	Dimensions [mm]							Mass [kg]	Wire [mm^2] *3
		D *2	D1	W	W1	H	H1	H2		
MR-J5-10_ MR-J5-20_	FR-HEL-0.4K	61	28	70	60	71	61	48	0.4	2 (14 AWG)
MR-J5-40_	FR-HEL-0.75K	61	28	85	74	81	71	59	0.5	
MR-J5-60_ MR-J5-70_	FR-HEL-1.5K	70	33	85	74	81	71	59	0.8	
MR-J5-100_	FR-HEL-2.2K	70	33	85	74	81	71	59	0.9	

*1 When using the power factor improving DC reactor, remove the short-circuit bar between P3 and P4.

*2 Maximum dimensions. The dimensions vary depending on the curvature of the input/output lines.

*3 Selection conditions for the wire size are as follows.
Wire type: 600 V Grade heat-resistant polyvinyl chloride insulated wire (HIV wire)
Construction requirements: Single wire set in midair

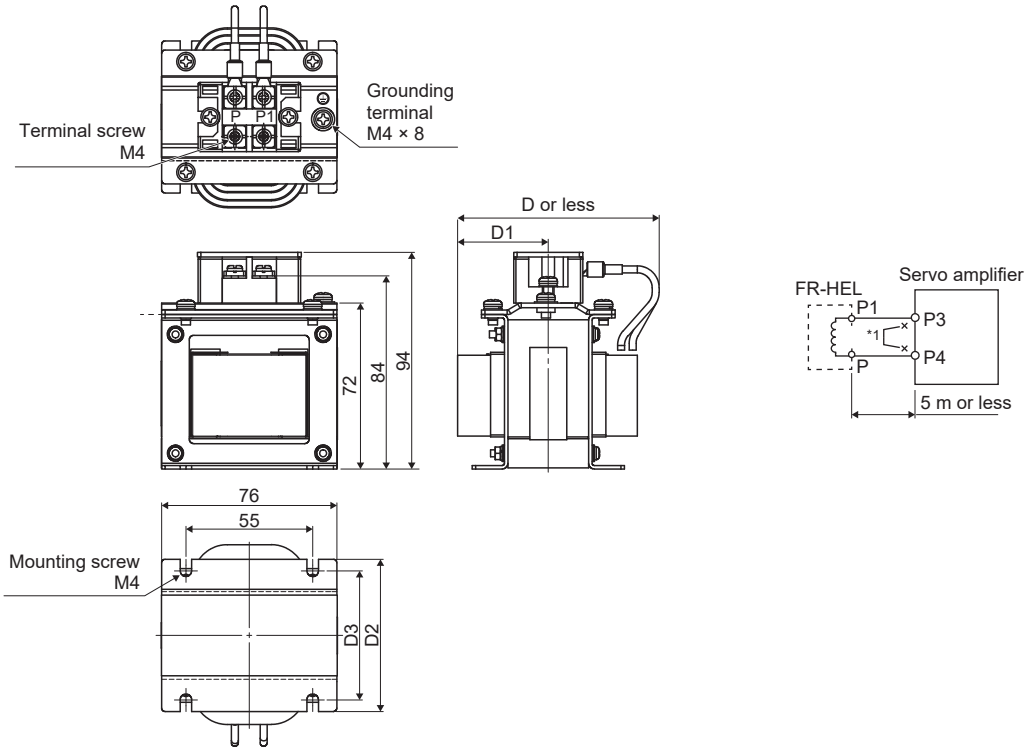

Servo amplifier	Power factor improving DC reactor	Dimensions [mm]				Mass [kg]	Wire [mm^2] *3
		D *2	D1	D2	D3		
MR-J5-200_	FR-HEL-3.7K	82	39	66	56	1.4	2 (14 AWG)

*1 When using the power factor improving DC reactor, remove the short-circuit bar between P3 and P4.

*2 Maximum dimensions. The dimensions vary depending on the curvature of the input/output lines.

*3 Selection conditions for the wire size are as follows.
Wire type: 600 V Grade heat-resistant polyvinyl chloride insulated wire (HIV wire)
Construction requirements: Single wire set in midair

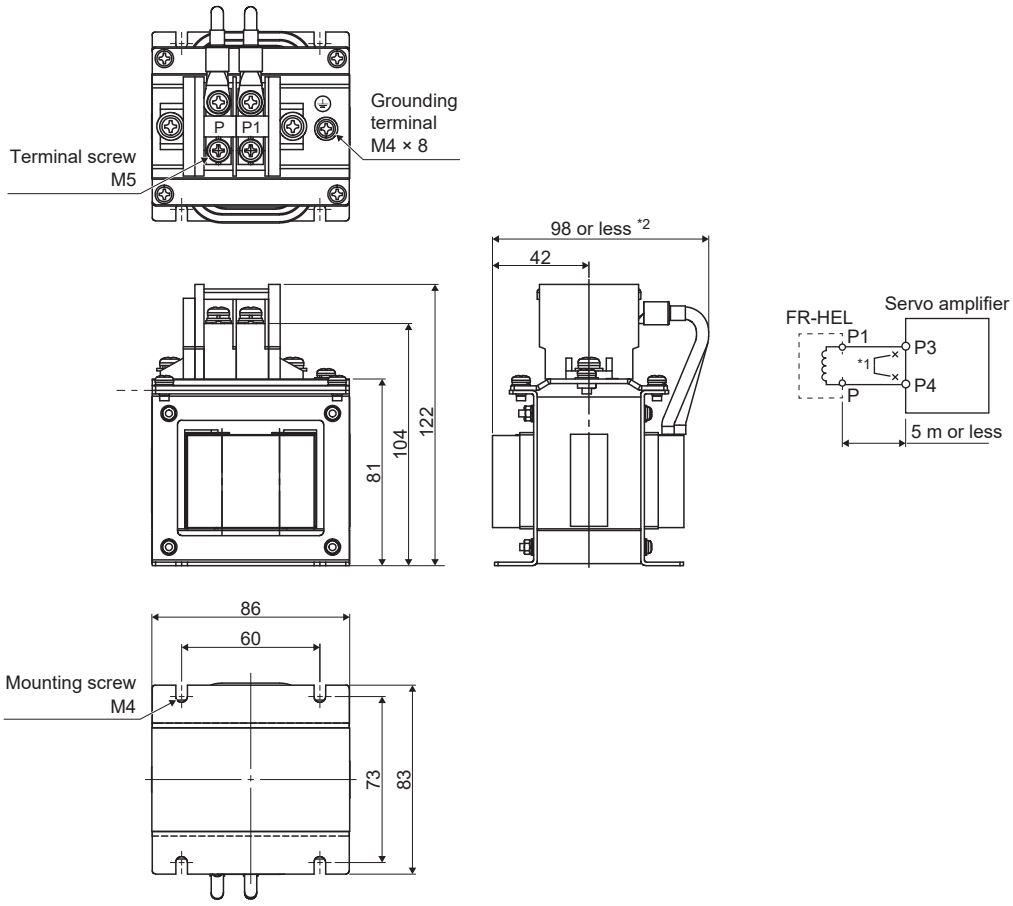

Servo amplifier	Power factor improving DC reactor	Mass [kg]	Wire [mm^2] *3
MR-J5-350_	FR-HEL-7.5K	2.3	3.5 (12 AWG)

*1 When using the power factor improving DC reactor, remove the short-circuit bar between P3 and P4.
*2 Maximum dimensions. The dimensions vary depending on the curvature of the input/output lines.
*3 Selection conditions for the wire size are as follows.
Wire type: 600 V Grade heat-resistant polyvinyl chloride insulated wire (HIV wire)
Construction requirements: Single wire set in midair

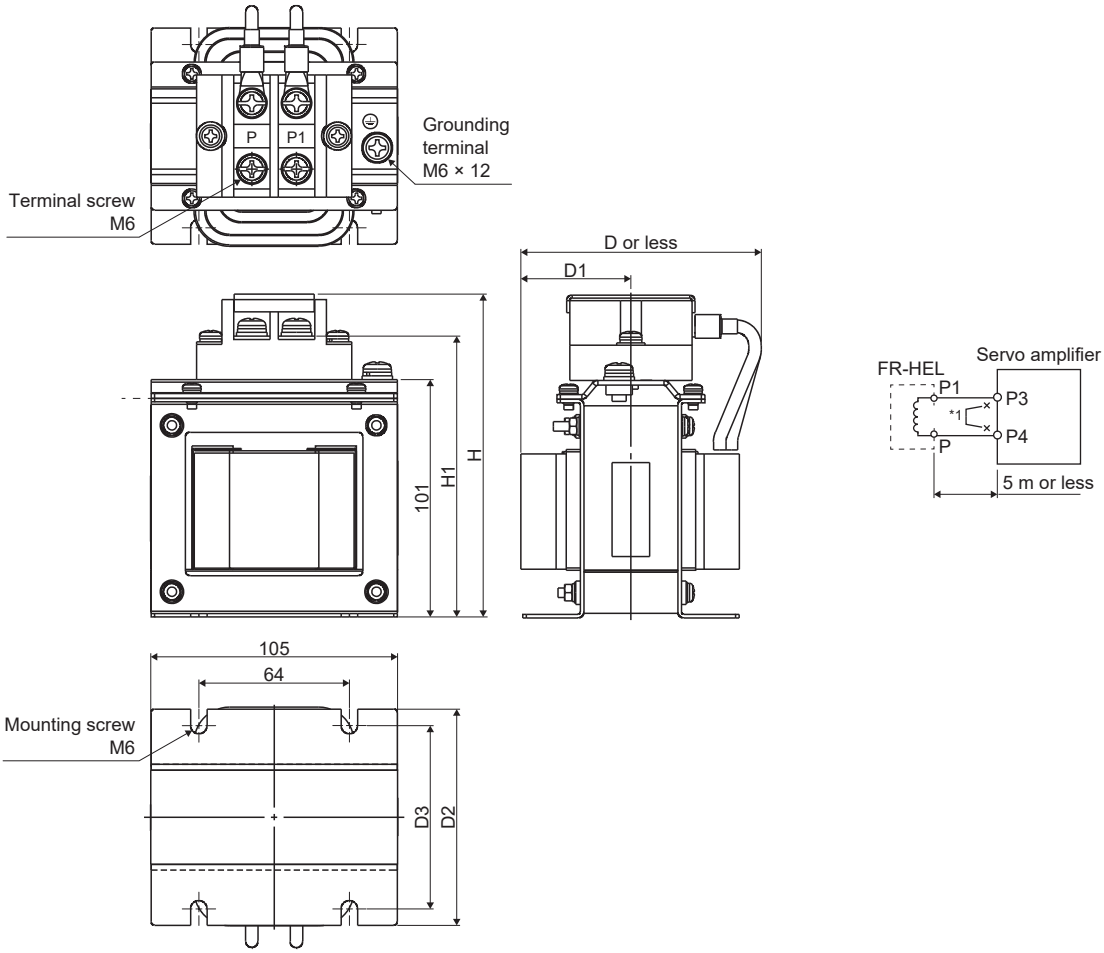

Servo amplifier	Power factor improving DC reactor	Dimensions [mm]						Mass [kg]	Wire [mm^2] *3
		D *2	D1	D2	D3	H	H1		
MR-J5-500_	FR-HEL-11K	112	47	92	78	138	118	3.1	5.5 (10 AWG)
MR-J5-700_	FR-HEL-15K	115	49	97	83	142	120	3.8	8 (8 AWG)

*1 When using the power factor improving DC reactor, remove the short-circuit bar between P3 and P4.

*2 Maximum dimensions. The dimensions vary depending on the curvature of the input/output lines.

*3 Selection conditions for the wire size are as follows.
Wire type: 600 V Grade heat-resistant polyvinyl chloride insulated wire (HIV wire)
Construction requirements: Single wire set in midair

400 V class

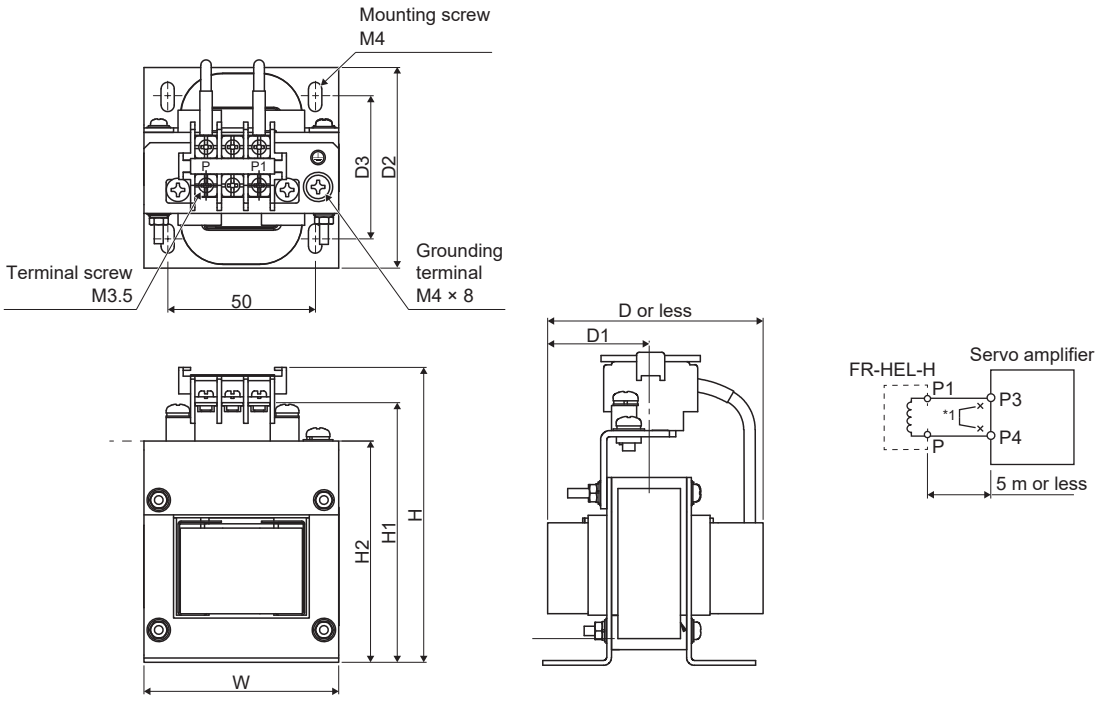

Servo amplifier	Power factor improving DC reactor	Dimensions [mm]								Mass [kg]	Wire [mm^2] *3
		D *2	D1	D2	D3	W	H	H1	H2		
MR-J5-60_4_	FR-HEL-H1.5K	80	36	74	54	66	100	87	75	1.0	2 (14 AWG)
MR-J5-100_4_	FR-HEL-H2.2K	80	38	74	54	76	110	97	85	1.3	2 (14 AWG)

*1 When using the power factor improving DC reactor, remove the short-circuit bar between P3 and P4.
*2 Maximum dimensions. The dimensions vary depending on the curvature of the input/output lines.
*3 Selection conditions for the wire size are as follows.
Wire type: 600 V Grade heat-resistant polyvinyl chloride insulated wire (HIV wire)
Construction requirements: Single wire set in midair

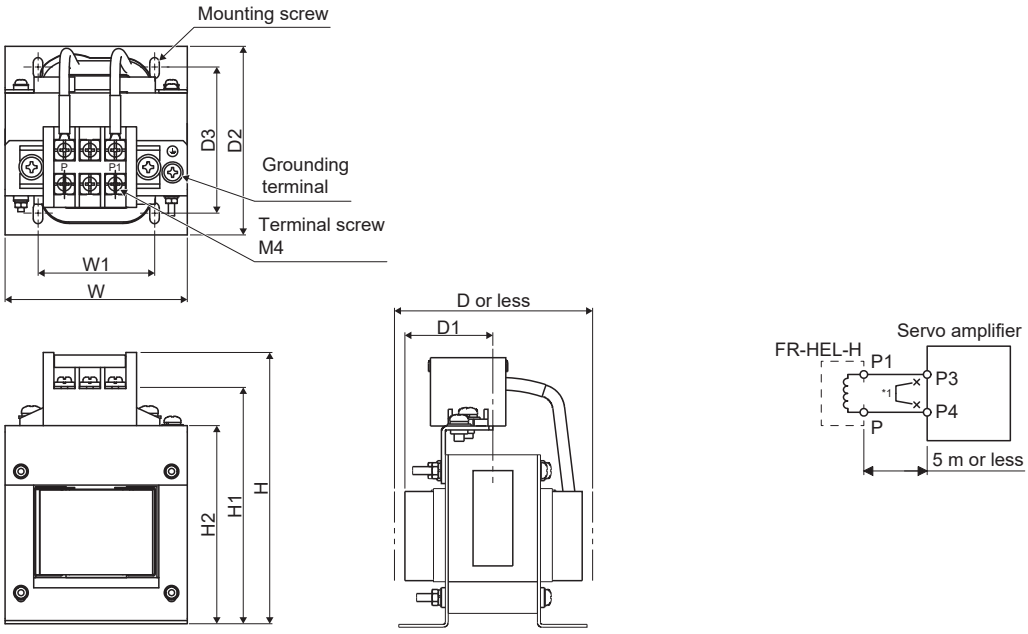

Servo amplifier	Power factor improving DC reactor	Dimensions [mm]									Mounting screw	Groundin g terminal	Mass [kg]	Wire [mm^2] *3
		D *2	D1	D2	D3	W	W1	H	H1	H2				
MR-J5-200_4_	FR-HEL-H3.7K	95	39	89	69	86	55	128	114	94	M4	M4 × 8	2.3	2 (14 AWG)
MR-J5-350_4_	FR-HEL-H7.5K	105	47	100	80	96	60	136	122	102	M5	M5 × 10	3.5	2 (14 AWG)

*1 When using the power factor improving DC reactor, remove the short-circuit bar between P3 and P4.

*2 Maximum dimensions. The dimensions vary depending on the curvature of the input/output lines.

*3 Selection conditions for the wire size are as follows.
Wire type: 600 V Grade heat-resistant polyvinyl chloride insulated wire (HIV wire)
Construction requirements: Single wire set in midair

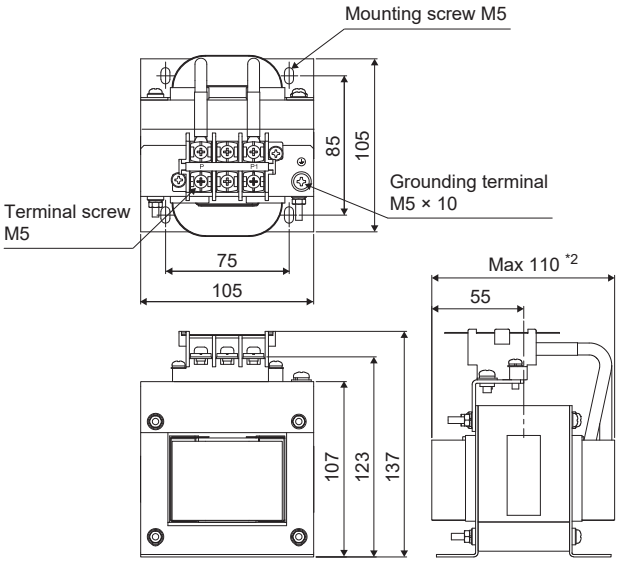

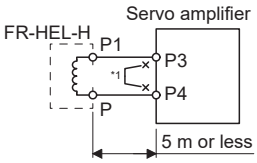

Servo amplifier	Power factor improving DC reactor	Mass [kg]	Wire [mm^2] *3
MR-J5-500_4_	FR-HEL-H11K	4.5	3.5 (12 AWG)

*1 When using the power factor improving DC reactor, remove the short-circuit bar between P3 and P4.
*2 Maximum dimensions. The dimensions vary depending on the curvature of the input/output lines.
*3 Selection conditions for the wire size are as follows.
Wire type: 600 V Grade heat-resistant polyvinyl chloride insulated wire (HIV wire)
Construction requirements: Single wire set in midair

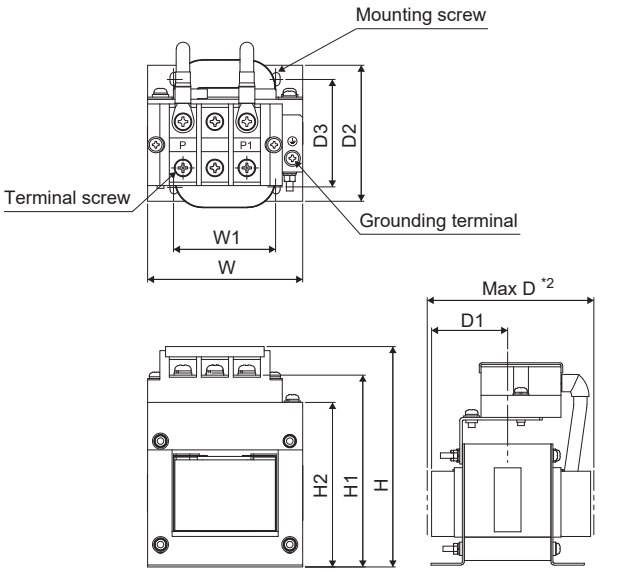

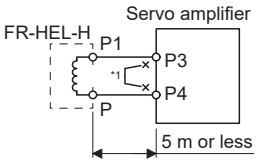

Servo amplifier	Power factor improving DC reactor	Dimensions [mm]									Terminal screw	Mounting screw	Grounding terminal	Mass [kg]	Wire [mm^2] *3
		D *2	D1	D2	D3	W	W1	H	H1	H2					
MR-J5-700_4_	FR-HEL-H15K	125	57	115	95	105	75	152	130	111	M6	M5	M5 × 10	5	5.5 (10 AWG)

*1 When using the power factor improving DC reactor, remove the short-circuit bar between P3 and P4.
*2 Maximum dimensions. The dimensions vary depending on the curvature of the input/output lines.
*3 Selection conditions for the wire size are as follows.
Wire type: 600 V Grade heat-resistant polyvinyl chloride insulated wire (HIV wire)
Construction requirements: Single wire set in midair

6.13 Power factor improving AC reactor

Advantages

- It improves the power factor by increasing the form factor of the servo amplifier's input current.
- It decreases the power supply capacity.
- The input power factor is improved to about 80 %.

Restrictions

When using power factor improving AC reactors for two servo amplifiers or more, connect a power factor improving AC reactor to each servo amplifier. If one unit of power factor improving reactor is used for multiple servo amplifiers, the power factor cannot be improved sufficiently unless all servo amplifiers are operated.

200 V class (1-axis servo amplifier)

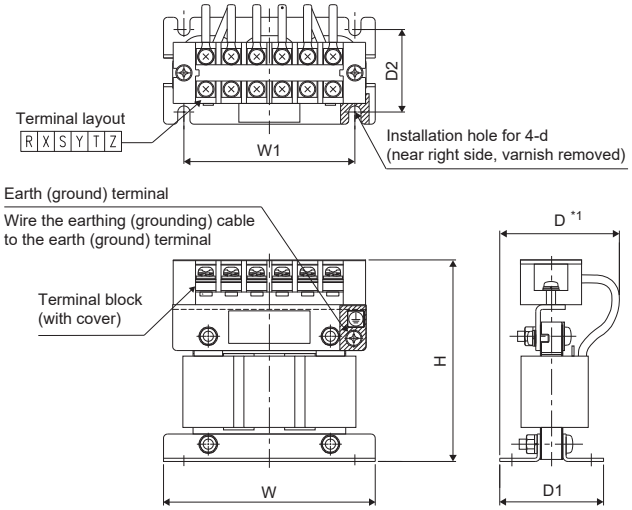

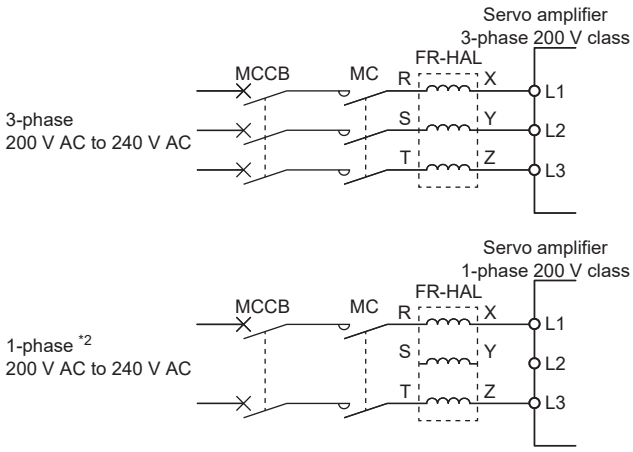

Servo amplifier	Power factor improving AC reactor	Dimensions [mm]							Terminal size	Mass [kg]
		W	W1	H	D *1	D1	D2	d		
MR-J5-10_ MR-J5-20_	FR-HAL-0.4K	104	84	99	72	51	40	M5	M4	0.6
MR-J5-40_	FR-HAL-0.75K	104	84	99	74	56	44	M5	M4	0.8
MR-J5-60_ MR-J5-70_	FR-HAL-1.5K	104	84	99	77	61	50	M5	M4	1.1

*1 Maximum dimensions. The dimensions vary depending on the curvature of the input/output lines.

*2 For 1-phase 200 V AC to 240 V AC power supply, connect the power supply to L1 and L3. Leave L2 open.

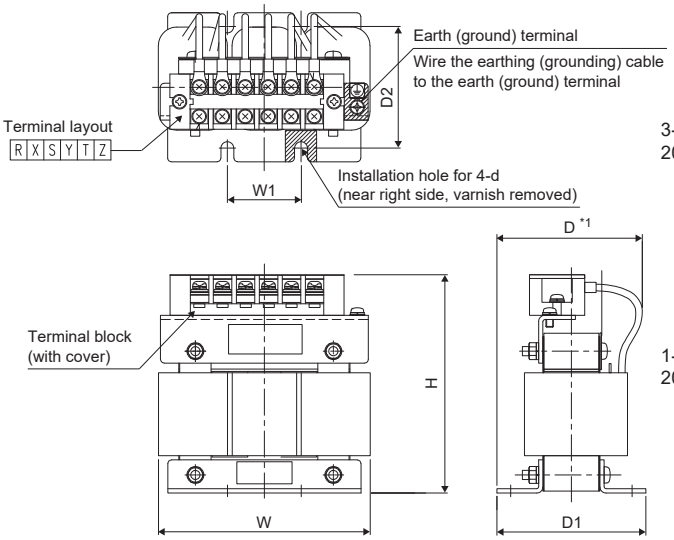

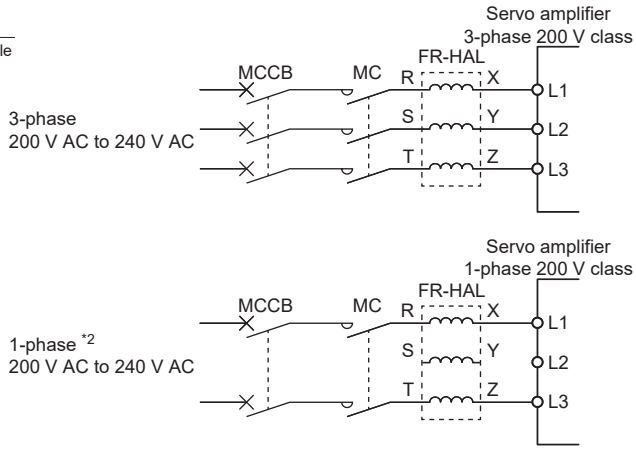

Servo amplifier	Power factor improving AC reactor	Dimensions [mm]							Terminal size	Mass [kg]
		W	W1	H	D *1	D1	D2	d		
MR-J5-100_ (3-phase power supply input)	FR-HAL-2.2K	115	40	115	77	71	57	M6	M4	1.5
MR-J5-100_ (1-phase power supply input) MR-J5-200_ (3-phase power supply input)	FR-HAL-3.7K	115	40	115	83	81	67	M6	M4	2.2
MR-J5-200_ (1-phase power supply input)	FR-HAL-5.5K	115	40	115	83	81	67	M6	M4	2.3

*1 Maximum dimensions. The dimensions vary depending on the curvature of the input/output lines.

*2 For 1-phase 200 V AC to 240 V AC power supply, connect the power supply to L1 and L3. Leave L2 open.

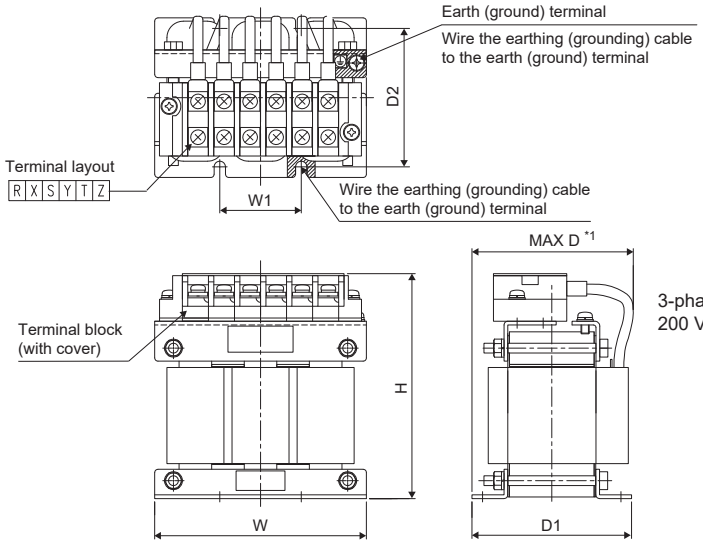

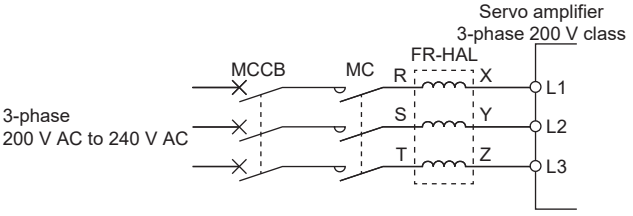

Servo amplifier	Power factor improving AC reactor	Dimensions [mm]							Terminal size	Mass [kg]
		W	W1	H	D *1	D1	D2	d		
MR-J5-350_	FR-HAL-7.5K	130	50	135	100	98	86	M6	M5	4.2
MR-J5-500_	FR-HAL-11K	160	75	164	111	109	92	M6	M6	5.2
MR-J5-700_	FR-HAL-15K	160	75	167	126	124	107	M6	M6	7.0

*1 Maximum dimensions. The dimensions vary depending on the curvature of the input/output lines.

200 V class (multi-axis servo amplifier)

When using a combination of the rotary servo motor, linear servo motor, and direct drive motor, select a power factor improving AC reactor tentatively, assuming one type of the servo motors is used for 2 or 3 axes. After the tentative selections are made for all types of the servo motors, use the largest among all power factor improving AC reactors.

• Dimensions

Refer to the following.

☞ Page 348 200 V class (1-axis servo amplifier)

• MR-J5W2-_

Total output of rotary servo motors	Total continuous thrust of linear servo motors	Total output of direct drive motors	Power factor improving AC reactor
450 W or less	150 N or less	100 W or less	FR-HAL-0.75K
From over 450 W to 600 W	From over 150 N to 240 N	From over 100 W to 377 W	FR-HAL-1.5K
From over 600 W to 1 kW	From over 240 N to 300 N	From over 377 W to 545 W	FR-HAL-2.2K
From over 1 kW to 2.0 kW	From over 300 N to 720 N	From over 545 W to 838 W	FR-HAL-3.7K

• MR-J5W3-_

Total output of rotary servo motors	Total continuous thrust of linear servo motors	Total output of direct drive motors	Power factor improving AC reactor
450 W or less	150 N or less	—	FR-HAL-0.75K
From over 450 W to 600 W	From over 150 N to 240 N	378 W or less	FR-HAL-1.5K
From over 600 W to 1 kW	From over 240 N to 300 N	—	FR-HAL-2.2K
From over 1 kW to 2.0 kW	From over 300 N to 450 N	—	FR-HAL-3.7K

400 V class (1-axis servo amplifier)

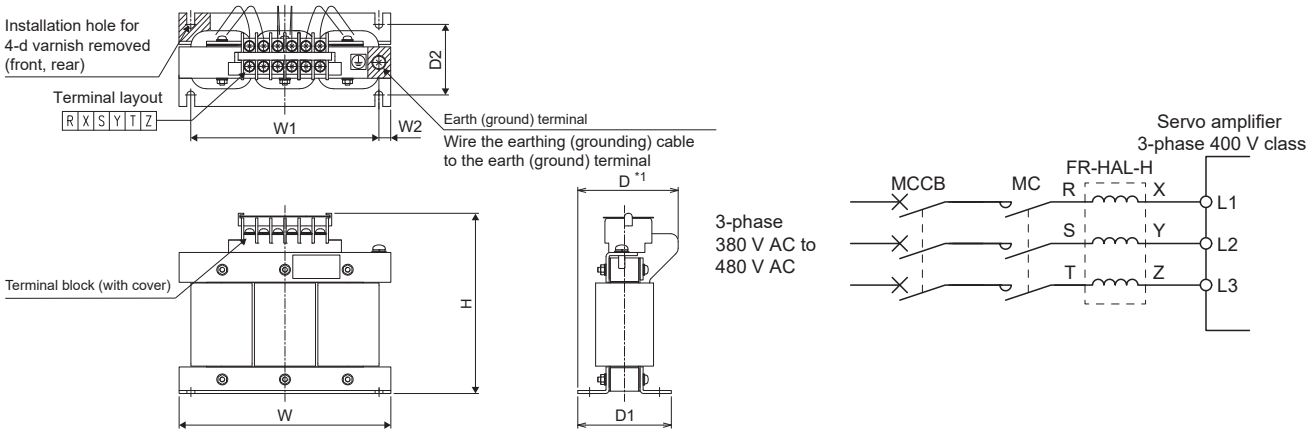

Servo amplifier	Power factor improving AC reactor	Dimensions [mm]								Terminal size	Mass [kg]
		W	W1	W2	H	D *1	D1	D2	d		
MR-J5-60_4_	FR-HAL-H1.5K	135	120	8	115	59	59.6	45	M4	M3.5	1.5
MR-J5-100_4_	FR-HAL-H2.2K	135	120	8	115	59	59.6	45	M4	M3.5	1.5
MR-J5-200_4_	FR-HAL-H3.7K	135	120	8	115	69	70.6	57	M4	M3.5	2.5

*1 Maximum dimensions. The dimensions vary depending on the curvature of the input/output lines.

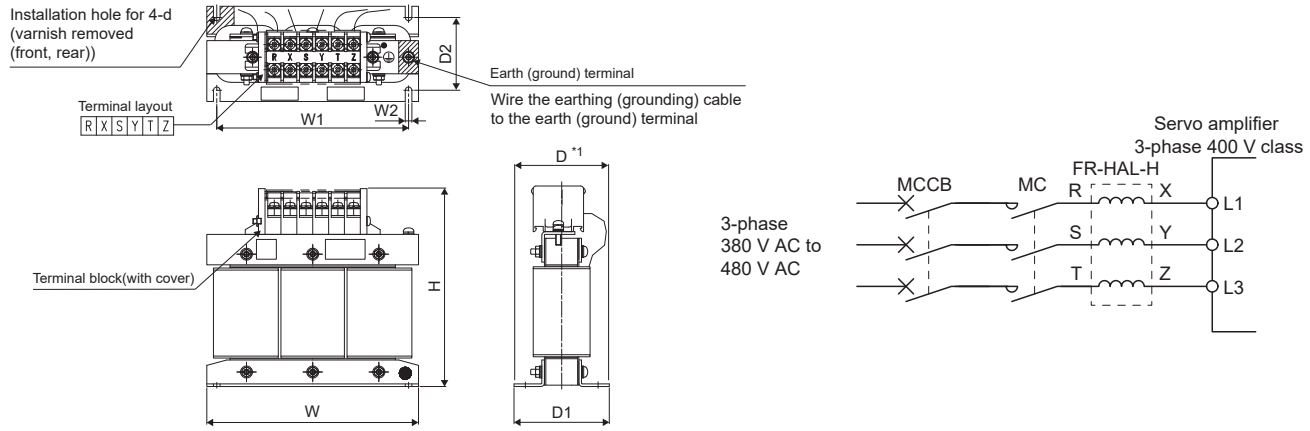

Servo amplifier	Power factor improving AC reactor	Dimensions [mm]								Terminal size	Mass [kg]
		W	W1	W2	H	D *1	D1	D2	d		
MR-J5-350_4_	FR-HAL-H7.5K	160	145	8	150	91	91	75	M4	M4	5.0

*1 Maximum dimensions. The dimensions vary depending on the curvature of the input/output lines.

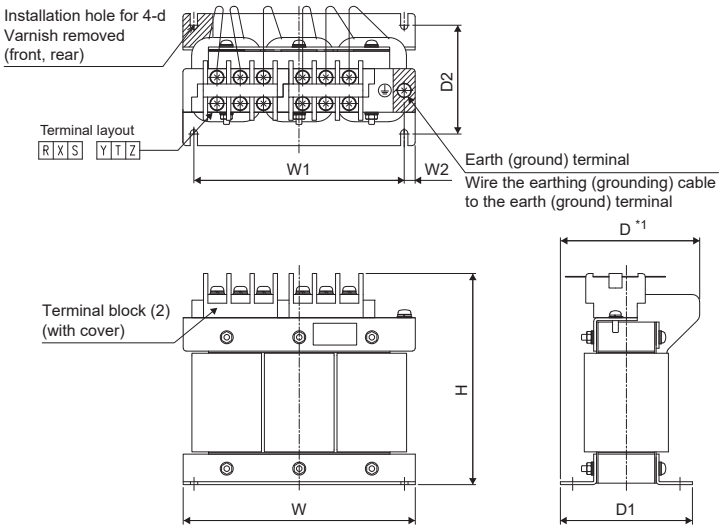

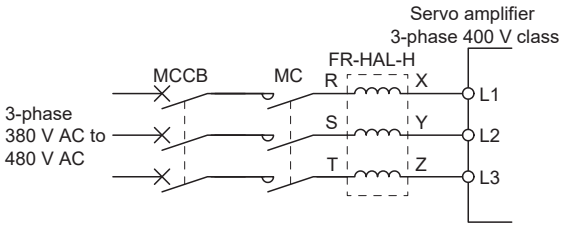

Servo amplifier	Power factor improving AC reactor	Dimensions [mm]								Terminal size	Mass [kg]
		W	W1	W2	H	D *1	D1	D2	d		
MR-J5-500_4_	FR-HAL-H11K	160	145	8	146	91	91	75	M4	M5	6.0
MR-J5-700_4_	FR-HAL-H15K	220	200	10	195	105	90	70	M5	M5	9.0

*1 Maximum dimensions. The dimensions vary depending on the curvature of the input/output lines.

6.14 Relay (recommended)

The following relays should be used with each interface.

Interface	Selection example
Digital input signal (interface DI-1) Relay used for digital input command signals	To prevent loose connections, use a relay for small signal (twin contacts). (Ex.) Omron: type G2A, type MY
Digital output signal (interface DO-1) Relay used for digital output signals	Small relay with 12 V DC or 24 V DC of rated current 40 mA or less (Ex.) Omron: type MY

6.15 Noise reduction techniques

Noises are classified into external noises, which enter the servo amplifier to cause it to malfunction, and those radiated by the servo amplifier to cause peripheral equipment to malfunction. Because the servo amplifier is an electronic device that handles small signals, the following general noise reduction techniques are required.
The servo amplifier can also be a source of noise as its outputs are chopped by high carrier frequencies. If peripheral equipment malfunctions due to noise produced by the servo amplifier, take measures to reduce the noise. The reduction techniques will vary slightly with the routes of noise transmission.

Noise reduction techniques

General reduction techniques

- Avoid bundling power lines (input/output lines) and signal cables together or running them in parallel to each other. Separate the power lines from the signal cables.
- Use a shielded twisted pair cable for connection with the encoder and for control signal transmission, and connect the external conductor of the cable to the SD terminal.
- For grounding, refer to the following.

☞ Page 143 Grounding

Reduction techniques for external noises that cause the servo amplifier to malfunction

If there are noise sources (such as a magnetic contactor, an electromagnetic brake, and many relays) that make a large amount of noise near the servo amplifier and the servo amplifier may malfunction, the following countermeasures are required.

- Provide surge killers on the noise sources to suppress noise.
- Attach data line filters to the signal cables.
- Ground the shields of the encoder connecting cable and the control signal cables with cable clamp fittings.
- Although a surge absorber is built into the servo amplifier, to protect the servo amplifier and other equipment against large exogenous noise and lightning surge, attaching a varistor to the power input section of the equipment is recommended.

Techniques for noises radiated by the servo amplifier that cause peripheral equipment to malfunction

Noises produced by the servo amplifier are classified into those radiated from the cables connected to the servo amplifier and its main circuits (input/output), those induced electromagnetically or statically by the signal cables of the peripheral equipment located near the main circuit cables, and those transmitted through the power supply cables.

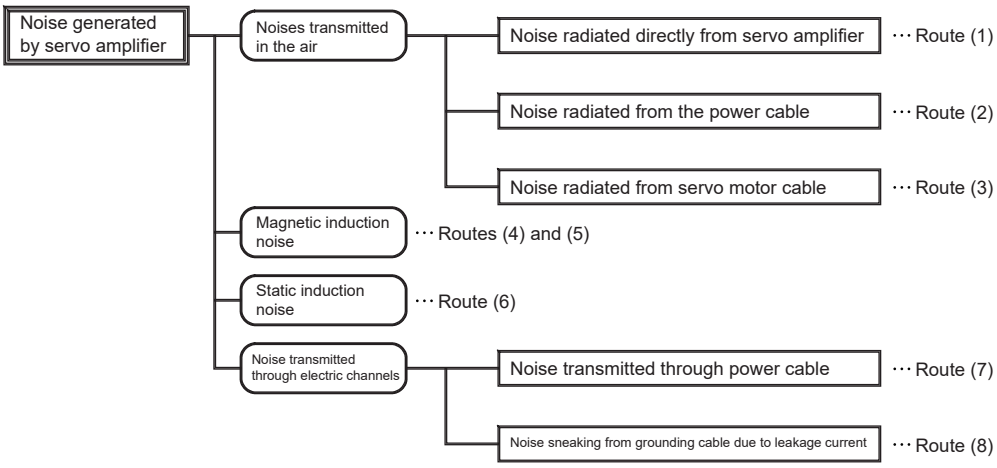

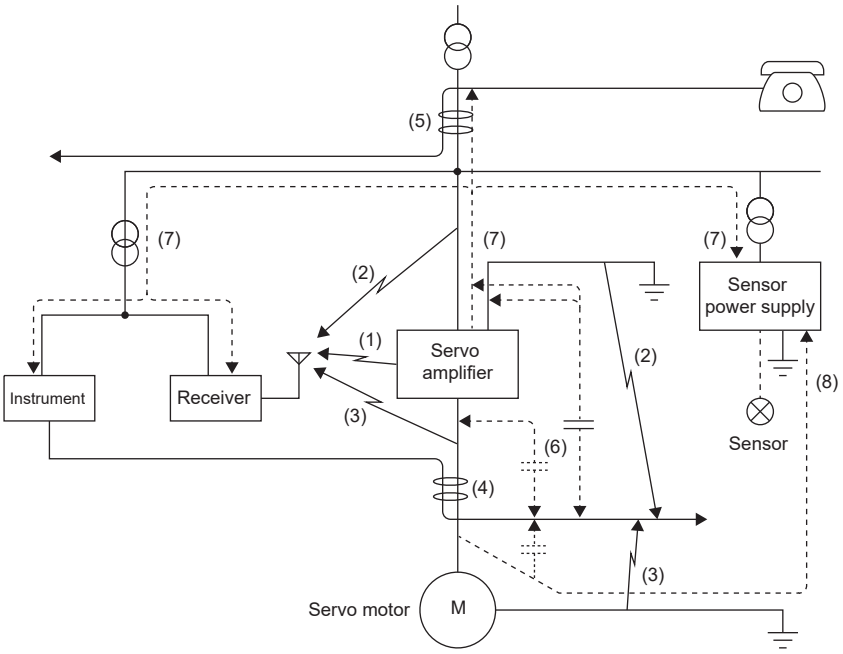

Noise transmission route	Suppression techniques
(1), (2), (3)	A malfunction due to noise transmitted through the air may occur in devices which handle weak signals and are susceptible to noise, such as measuring instruments, receivers, and sensors. In addition, a malfunction may also occur when their signal cables are stored in a cabinet together with the servo amplifier or when the signal cables run near the servo amplifier. Take the following measures to prevent a malfunction: • Provide maximum clearance between easily affected devices and the servo amplifier. • Provide maximum clearance between easily affected signal cables and the I/O cables of the servo amplifier. • Avoid bundling power lines (input/output lines of the servo amplifier) and signal cables together or running them in parallel to each other. • Insert a line noise filter to the I/O cables or a radio noise filter on the input line to reduce radiated noise from the cables. • Use shielded wires for the signal and power lines, or put the lines in separate metal conduits.
(4), (5), (6)	When power cables and signal cables are laid side by side or bundled together, electromagnetic and static induction noise is transmitted to the signal cables, causing malfunctions. Take the following precautions to protect the signal cables against noise. • Provide maximum clearance between easily affected devices and the servo amplifier. • Provide maximum clearance between easily affected signal cables and the I/O cables of the servo amplifier. • Avoid bundling power lines (input/output lines of the servo amplifier) and signal cables together or running them in parallel to each other. • Use shielded wires for the signal and power lines, or put the lines in separate metal conduits.
(7)	When the power supply of peripheral equipment is connected to the power supply of the servo amplifier system, noise produced by the servo amplifier may be transmitted back through the power supply cable, and the equipment may malfunction. The following techniques are required. • Install the radio noise filter (FR-BIF(-H)) on the power lines (input lines) of the servo amplifier. • Install the line noise filter (FR-BSF01/FR-BLF) on the power lines of the servo amplifier.
(8)	If the grounding wires of the peripheral equipment and the servo amplifier make a closed loop circuit, leakage current may flow through, causing the equipment to malfunction. In this case, the malfunction may be prevented by disconnecting the grounding wires from the equipment.

Noise reduction techniques for the network cable

Point

Take measures against noise for both ends of the network cable.

If using the network cable in an environment with excessive noise, directly connect the shield of the cable to the ground plate with cable clamp fittings at a place 200 mm to 300 mm from the servo amplifier.

When connecting the network cable from outside the cabinet, connect it to the ground plate at a place 5 mm to 10 mm away from the cabinet entrance.

To reinforce noise reduction techniques, installing a data line filter (TDK ZCAT1730-0730) to the network cable is recommended. Install the data line filter to a place 80 mm or less from the servo amplifier.

■Inside the cabinet

• When using cable clamp fittings

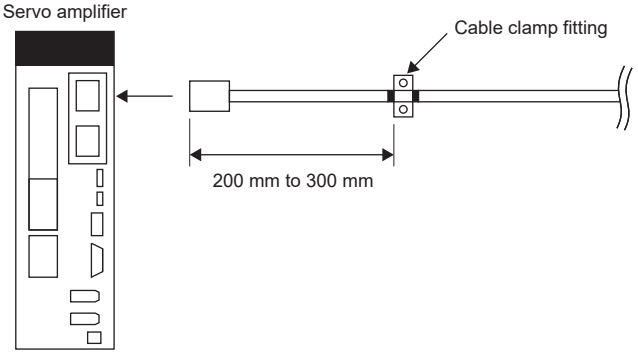

• When using a data line filter

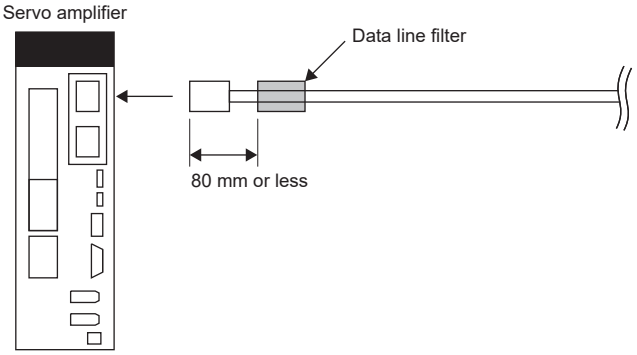

■Outside the cabinet

• When using cable clamp fittings

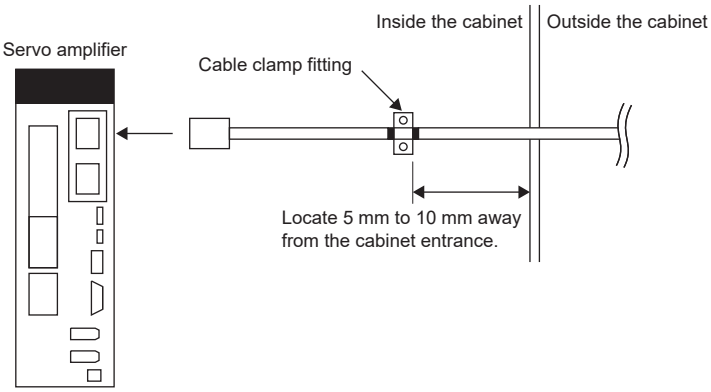

• When using a data line filter

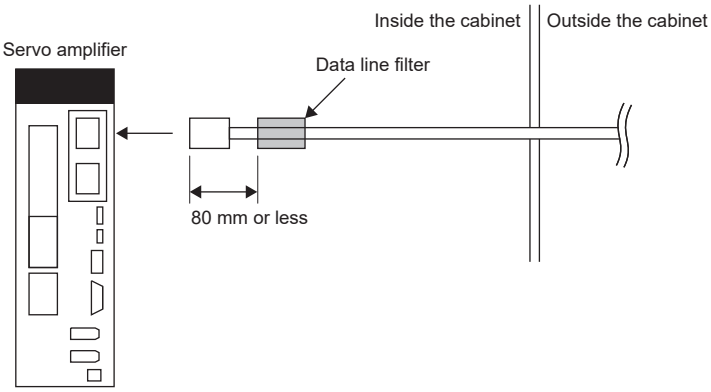

Noise reduction products

Data line filter (recommended)

Noise can be prevented by installing a data line filter onto cables such as the encoder cable.

For example, ZCAT3035-1330 by TDK, ESD-SR-250 by TOKIN, GRFC-13 by Kitagawa Industries, and E04SRM563218 by SEIWA ELECTRIC are available as data line filters.

As a reference example, the impedance specifications of the ZCAT3035-1330 (TDK) are indicated below. These impedances are reference values and not guaranteed values.

Impedance [Ω]	
10 MHz to 100 MHz	**100 MHz to 500 MHz**
80	150

[Unit: mm]

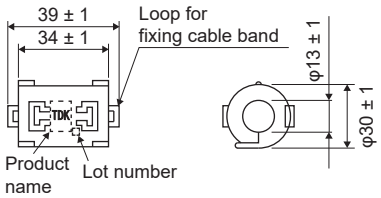

Dimensions (ZCAT3035-1330)

Surge killer (recommended)

Use of a surge killer is recommended for AC relay, magnetic contactor, or the like near the servo amplifier. Use the following surge killer or equivalent.

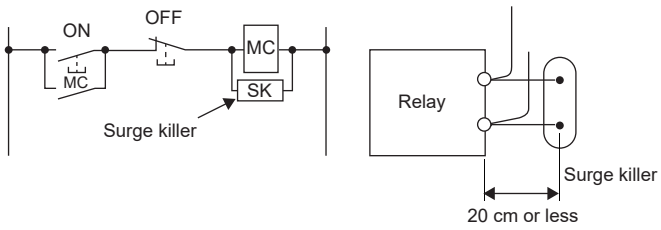

Ex.

CR-50500 (Okaya Electric Industries)

Rated voltage AC [V]	C [μF ±20 %]	R [Ω ±30 %]	Test voltage	Dimensions [Unit: mm]
250	0.5	50 (1/2W)	Between terminals: 625 V AC, 50 Hz/60 Hz 60 s Between terminal and case: 2000 V AC 50/60 Hz 60 s	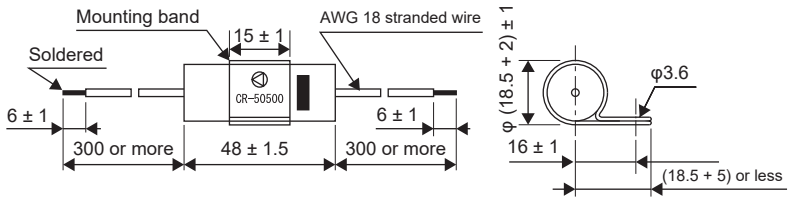

Note that a diode should be installed to a DC relay or the like.

Maximum voltage: Not less than four times the drive voltage of the relay or the like

Maximum current: Not less than two times the drive current of the relay or the like

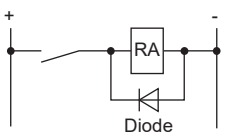

Cable clamp fitting AERSBAN-_SET

Generally, connecting the grounding wire of the shielded wire to the SD terminal of the connector provides a sufficient effect. However, the effect can be increased when the shielded wire is connected directly to the ground plate as shown below. Install the ground plate near the servo amplifier for the encoder cable. Peel a part of the cable insulator to expose the external conductor, and press that part against the ground plate with the cable clamp. If the cable is thin, clamp several cables in a bunch.

The cable clamp comes as a set with the grounding plate.

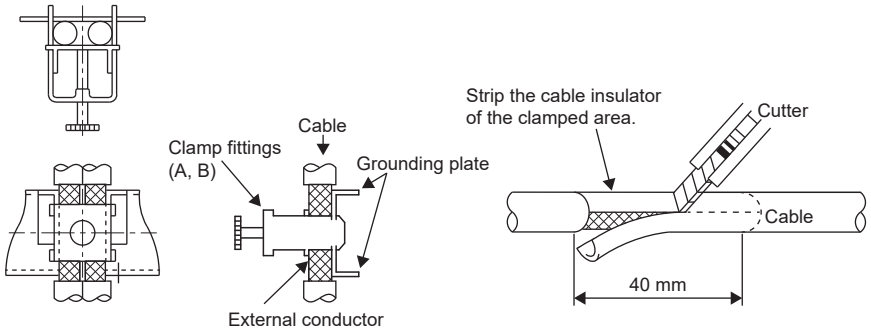

- Dimensions

[Unit: mm]

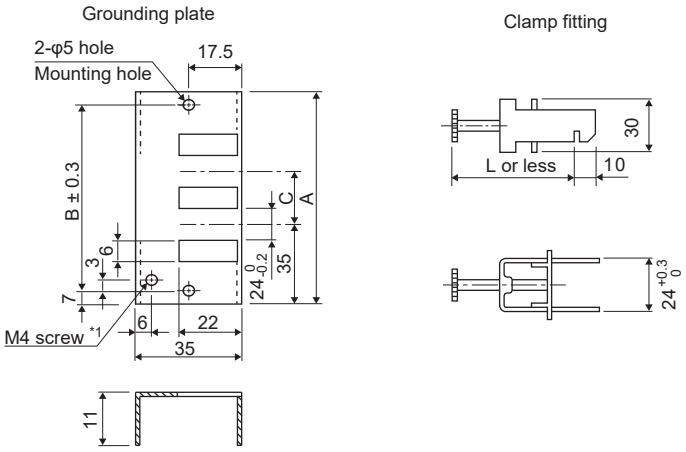

*1 Screw hole for grounding. Connect it to the ground plate of the cabinet.

Model	A	B	C	Accessory fittings
AERSBAN-DSET	100	86	30	Clamp A: 2 pcs.
AERSBAN-ESET	70	56	—	Clamp B: 1 pc.

Clamp fitting	L
A	70
B	45

Precautions

- The motor cable (single cable type) has no shield on the outermost circumference. Therefore, to ground the motor cable with a cable clamp, use a motor cable (dual cable type).

Line noise filter (FR-BSF01/FR-BLF)

This filter is effective in suppressing noise radiated from the power supply side and output side of the servo amplifier and also in suppressing high-frequency leakage current (0-phase current). It is especially effective for noise between 0.5 MHz and 5 MHz band.

Connection diagram

The line noise filters can be mounted on lines of the main circuit power supply (L1/L2/L3) and of the servo motor power supply (U/V/W). Pass each of the wires through the line noise filter the same number of times in the same direction. For wires of the main circuit power supply, the effect of the filter rises as the number of passes increases, but generally four passes would be appropriate. For the servo motor power supply lines, passes must be four times or less. Do not pass the grounding wire through the filter. Otherwise, the effect of the filter will drop.

Wind the wires through the line noise filter to satisfy the required number of passes, as shown in Example 1. If the wires are too thick to wind, use two or more line noise filters to have the required number of passes, as shown in Example 2.

Place the line noise filters as close to the servo amplifier as possible for their best performance. Noise-reducing effect will be enhanced.

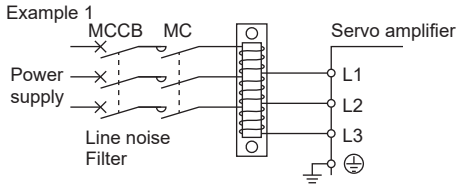

(Number of passes: 4)

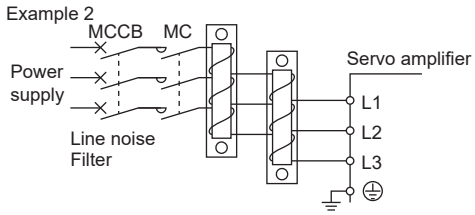

For two filters
(Total number of passes: 4)

Dimensions [Unit: mm]

FR-BSF01 (for wire size 3.5 mm^2 (12 AWG) or less)

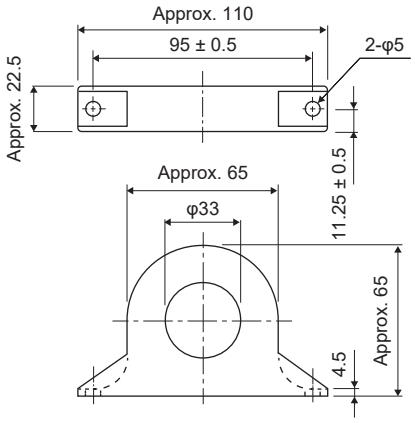

FR-BLF (for wire size 5.5 mm^2 (10 AWG) or more)

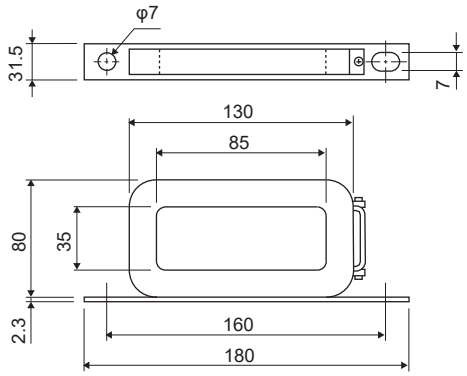

Radio noise filter (FR-BIF(-H))

This filter is effective in suppressing noise radiated from the power supply side of the servo amplifier, especially in 10 MHz and lower radio frequency bands. The FR-BIF(-H) is designed for the input only.

200 V class: FR-BIF

400 V class: FR-BIF-H

Connection diagram

Make the connection cables as short as possible. Grounding is required. When using the FR-BIF(-H) with a single-phase power supply, insulate unconnected lead wires.

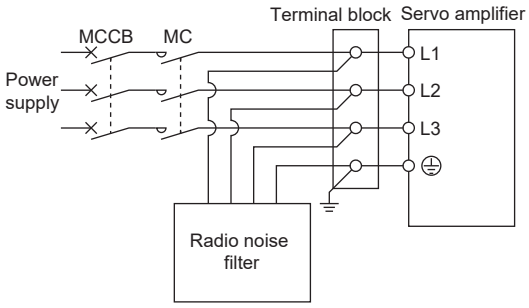

Dimensions [Unit: mm]

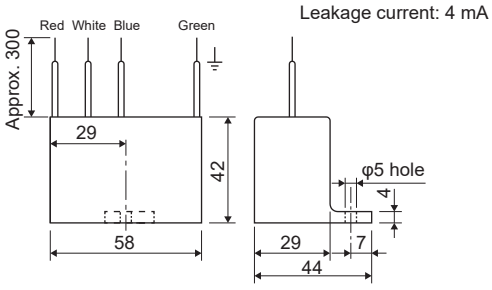

Varistor for input power supply (recommended)

Varistors are effective to prevent exogenous noise and lightning surges from entering the servo amplifier. When using a varistor, connect it between each phase of the input power supply of the equipment. For varistors, the TND20V-431K, TND20V-471K, and TND20V-102K manufactured by Nippon Chemi-Con are recommended. For detailed specification and usage of the varistors, refer to the manufacturer catalog.

Power supply voltage	Varistor	Maximum rating					Maximum limit voltage		Static capacity (reference value)	Varistor voltage rating (range) V1 mA
		Permissible circuit voltage		Surge current immunity	Energy immunity	Rated pulse power	[A]	[V]		
		AC [Vrms]	DC [V]	8/20 μs [A]	2 ms [J]	[W]			[pF]	[V]
200 V	TND20V-431K	275	350	10000/1 time 7000/2 times	195	1.0	100	710	1300	430 (387 to 473)
	TND20V-471K	300	385		215			775	1200	470 (423 to 517)
400 V	TND20V-102K	625	825	7500/1 time 6500/2 times	400	1.0	100	1650	560	1000 (900 to 1100)

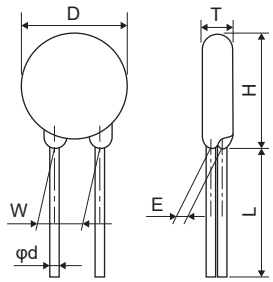

[Unit: mm]

Model	D Max.	H Max.	T Max.	E ±1.0	L Min.*1	φd ±0.05	W ±1.0
TND20V-431K	21.5	24.5	6.4	3.3	20	0.8	10.0
TND20V-471K			6.6	3.5			
TND20V-102K	22.5	25.5	9.5	6.4	20	0.8	10.0

*1 For special purpose items for lead length (L), contact the manufacturer.

6.16 Earth-leakage current breaker

Selection method

High-frequency chopper currents controlled by pulse width modulation flow in the AC servo circuits. Leakage currents containing harmonics contents are larger than those of the motor, which runs on AC power.

Select an earth-leakage current breaker according to the following formula, and ground the servo amplifier, servo motor, etc. securely.

To minimize leakage currents, make the input and output wires as short as possible, and keep a distance of 30 cm or longer between the wires and ground.

• MR-J5-_G_, MR-J5-_B_ or MR-J5-_A_

Rated sensitivity current ≥ 10 • {Ig1 + Ign + Iga + K • (Ig2 + Igm)} [mA] . . . (6.1)

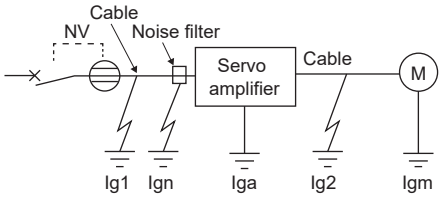

• MR-J5W_-_

Rated sensitivity current ≥ 10 • {Ig1 + Ign + Iga + K • (Ig2 (A-axis) + Igm (A-axis) + Ig2 (B-axis) + Igm (B-axis) + Ig2 (C-axis) + Igm (C-axis))} [mA] . . . (6.2)

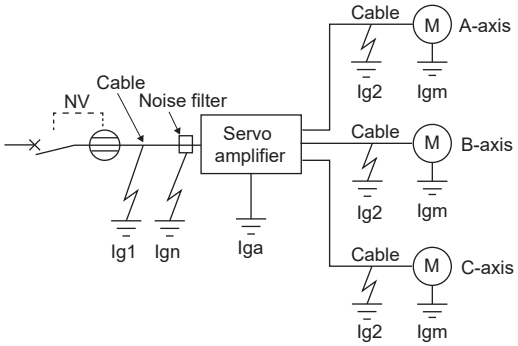

Earth-leakage current breaker		K
Type	Mitsubishi Electric products	
Models provided with harmonics and surge reduction techniques	NV-SP NV-SW NV-CP NV-CW NV-HW	1
General models	BV-C1 NFB NV-L	3

Ig1: Leakage current on the electric channel from the earth-leakage current breaker to the input terminals of the servo amplifier

☞ Page 363 Example of leakage current (Ig1, Ig2) per km of CV cable run in metal conduit

Ig2: Leakage current on the electric channel from the output terminals of the servo amplifier to the servo motor

☞ Page 363 Example of leakage current (Ig1, Ig2) per km of CV cable run in metal conduit

Ign: Leakage current when a filter is connected to the input side (4.4 mA per one FR-BIF(-H))

Iga: Servo amplifier leakage current

☞ Page 364 Servo amplifier leakage current example (Iga)

Igm: Servo motor leakage current

☞ Page 363 Servo motor leakage current example (Igm)

Example of leakage current (Ig1, Ig2) per km of CV cable run in metal conduit

- 200 V class

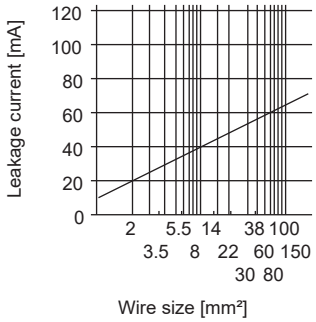

- 400 V class

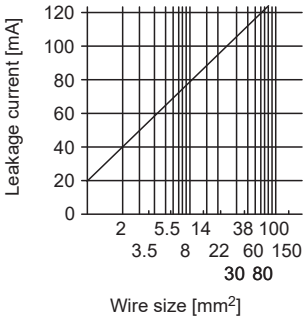

Servo motor leakage current example (Igm)

Servo motor output [kW]	Leakage current [mA]
0.05 to 1	0.1
1.2 to 2	0.2
3 to 3.5	0.3
4.2 to 5	0.5
6 to 7	0.7

Servo amplifier leakage current example (Iga)

Servo amplifier	Leakage current [mA]
MR-J5-10_ MR-J5-20_ MR-J5-40_ MR-J5-60_ MR-J5-70_ MR-J5-100_	0.16
MR-J5-200_ MR-J5-350_	0.22
MR-J5-500_ MR-J5-700_	2
MR-J5W2-22_ MR-J5W2-44_	0.1
MR-J5W2-77_ MR-J5W2-1010_ MR-J5W3-222_ MR-J5W3-444_	0.15
MR-J5-60_4_ MR-J5-100_4_ MR-J5-200_4_ MR-J5-350_4_	0.38
MR-J5-500_4_ MR-J5-700_4_	2

Earth-leakage current breaker selection example

Servo amplifier	Rated sensitivity current of earth-leakage current breaker [mA]
MR-J5-10_ to MR-J5-350_	15
MR-J5-500_	30
MR-J5-700_	50
MR-J5W2-_	15
MR-J5W3-_	30
MR-J5-60_4_ to MR-J5-350_4_	15
MR-J5-500_4_	100
MR-J5-700_4_	100

Selection example

This section shows examples of selecting an earth-leakage current breaker under the following conditions.

1-axis servo amplifier

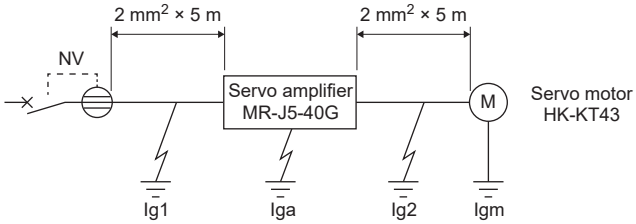

Use an earth-leakage current breaker designed for suppressing harmonics/surges.

Find each term of formula (6.1) from the diagram.

$$Ig1 = 20 \cdot \frac{5}{1000} = 0.1\ [mA]$$

$$Ig2 = 20 \cdot \frac{5}{1000} = 0.1\ [mA]$$

Ign = 0 (not used)

Iga = 0.1 [mA]

Igm = 0.1 [mA]

Insert these values in formula (6.1).

$Ig \geq 10 \cdot \{0.1 + 0 + 0.1 + 1 \cdot (0.1 + 0.1)\}$

$Ig \geq 4$ [mA]

According to the result of calculation, use an earth-leakage current breaker having the rated sensitivity current (Ig) of 4.0 mA or more.

Use an earth-leakage current breaker having Ig of 15 mA for the NV-SP/SW/CP/CW/HW series.

Multi-axis servo amplifier

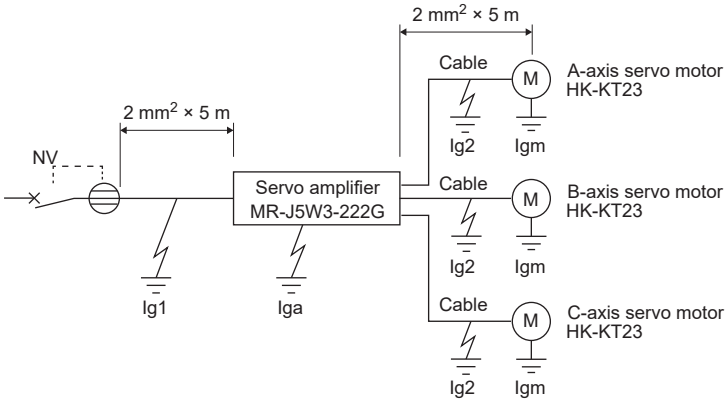

Use an earth-leakage current breaker designed for suppressing harmonics/surges.
Find each term of formula (6.1) from the diagram.

$$Ig1 = 20 \cdot \frac{5}{1000} = 0.1\ [mA]$$

$$Ig2 = 20 \cdot \frac{5}{1000} = 0.1\ [mA]$$

Ign = 0 (not used)
Iga = 0.15 [mA]
Igm = 0.1 [mA]
Insert these values in formula (6.1).
$Ig \geq 10 \cdot \{0.1 + 0 + 0.15 + 1 \cdot (0.1 + 0.1 + 0.1 + 0.1 + 0.1 + 0.1)\}$
$Ig \geq 8.5$ [mA]
According to the result of calculation, use an earth-leakage current breaker having the rated sensitivity current (Ig) of 8.5 mA or more.
Use an earth-leakage current breaker having Ig of 15 mA for the NV-SP/SW/CP/CW/HW series.

6.17 EMC filter (recommended)

It is recommended that one of the following filters be used to comply with EN EMC directive. Some EMC filters have a large leakage current.

When connecting one or more servo amplifiers to one EMC filter, satisfy the following conditions:

- Rated voltage of the EMC filter [V] ≥ Rated voltage of the servo amplifiers [V]
- Rated current of the EMC filter [A] ≥ Total rated current of the servo amplifiers connected to the EMC filter [A]

Application environment	Servo motor Total length of power cable	EMC filter					
		Model	Rated current [A]	Rated voltage [VAC]	Operating temperature [°C]	Mass [kg]	Manufacturer
IEC/EN 61800-3 Category C2, C3 *1	50 m or less	FSB-10-254-HU	10	250	-40 to 85	1.8	COSEL
		FSB-20-254-HU	20				
		FSB-30-254-HU	30				
		FSB-40-324-HU	40	250		3.3	
		FSB-10-355	10	500	-40 to 85	1.8	
		FSB-20-355	20				
		FN3288-16-44-C35-R65 *2	16	530	-40 to 50	1.0	Schaffner EMC K.K.
		FN3288-40-33-C35-R65 *2	40			1.8	
		FN3288-63-53-C35-R65	63			2.7	
IEC/EN 61800-3 Category C3 *1		HF3010C-SZB	10	500	-20 to 50	0.9	Soshin Electric
		HF3020C-SZB	20			1.3	
		HF3030C-SZB	30				
		HF3040C-SZB	40			2.0	
	100 m or less	HF3030C-SZL	30	500	-20 to 50	1.3	
	200 m or less	HF3060C-SZL	60			2.1	
	250 m or less	HF3100C-SZL	100			5.8	
	250 m or less	HF3150C-SZL	150			9.0	

*1 Category C2: intended for use in the first environment (residential environment) only when installed by professional personnel or for use in the second environment (commercial, light industry and industrial environments)
Category C3: intended for use in the second environment (commercial, light industry and industrial environments)

*2 For 200 V class servo amplifiers, FN3288-16-44-C17-R65 or FN3288-40-33-C17-R65 whose the leakage current is suppressed can be used.

Connection example

■For 3-phase 200 V AC to 240 V AC power supply

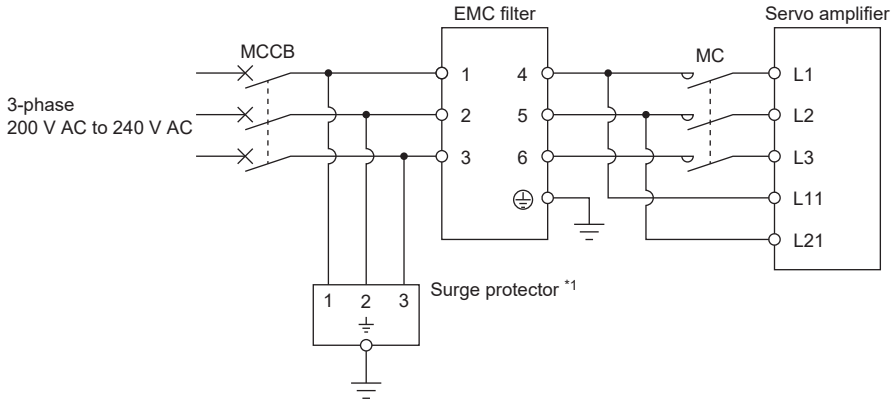

*1 When a surge protector is used.

■For 1-phase 200 V AC to 240 V AC power supply

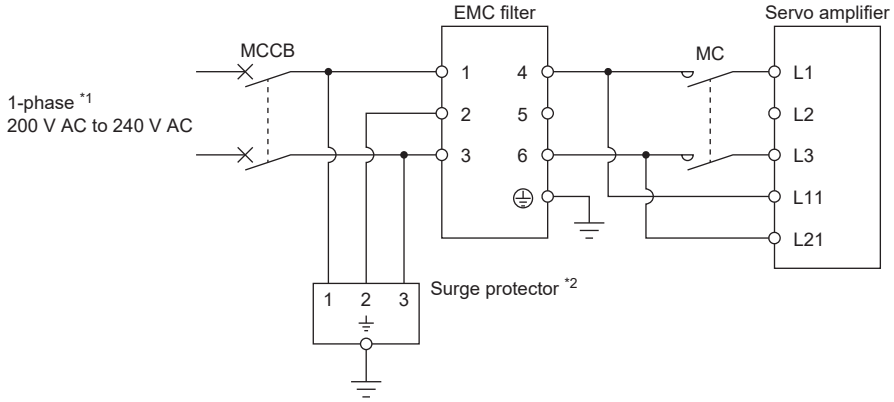

*1 Connect the power supply to L1 and L3. Leave L2 open.
*2 When a surge protector is used.

■For 3-phase 380 V AC to 480 V AC power supply

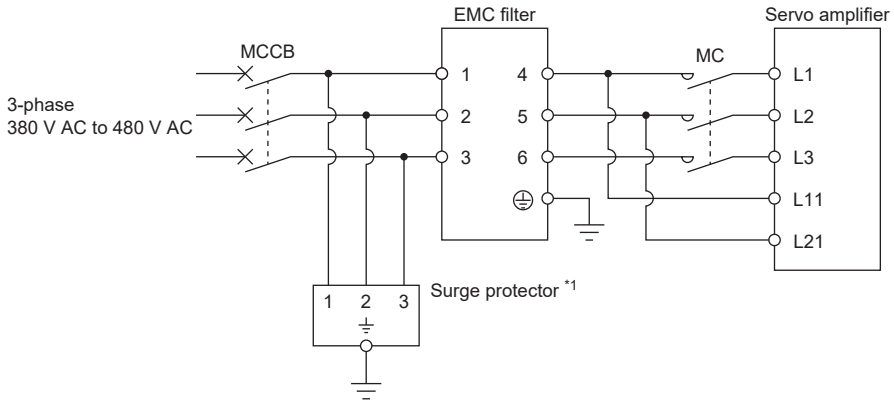

*1 When a surge protector is used.

Dimensions

For dimensions of FN3288-16-44-C35-R65, FN3288-40-33-C35-R65, and FN3288-63-33-C35-R65, contact the manufacturer.

■EMC filter

• FSB-10-254-HU/FSB-20-254-HU/FSB-30-254-HU/FSB-10-355/FSB-20-355

[Unit: mm]

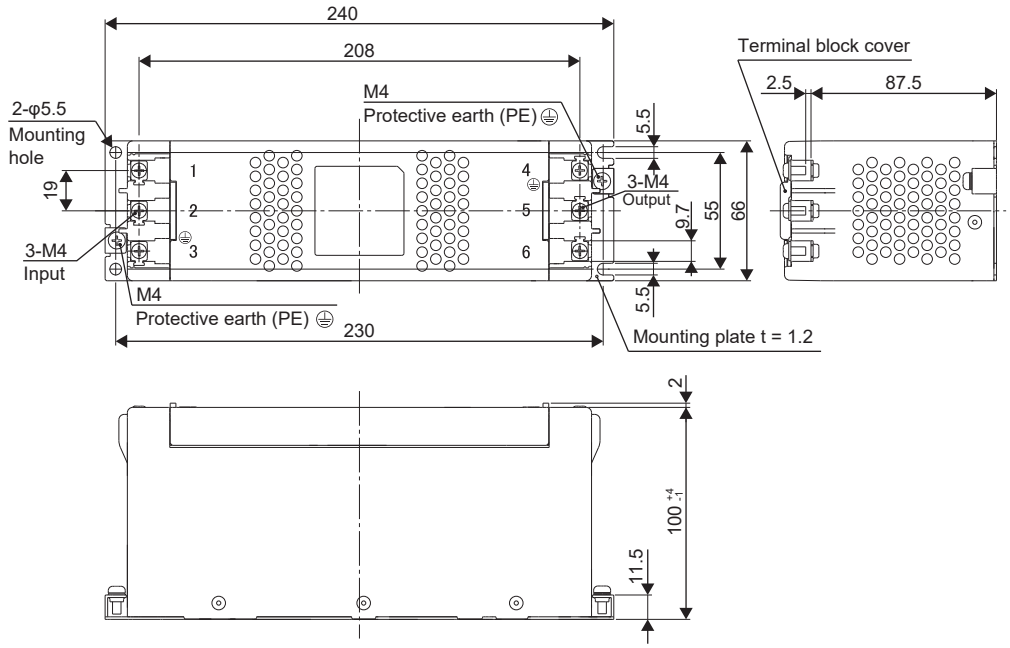

• FSB-40-324-HU

[Unit: mm]

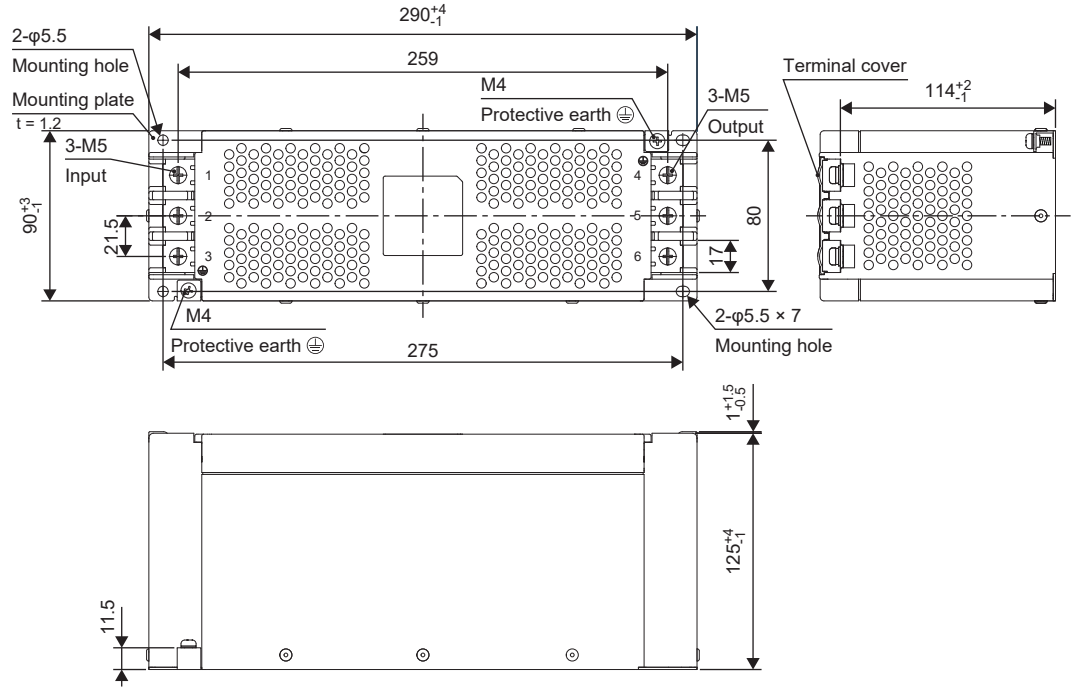

• HF3010C-SZB/HF3020C-SZB/HF3030C-SZB

[Unit: mm]

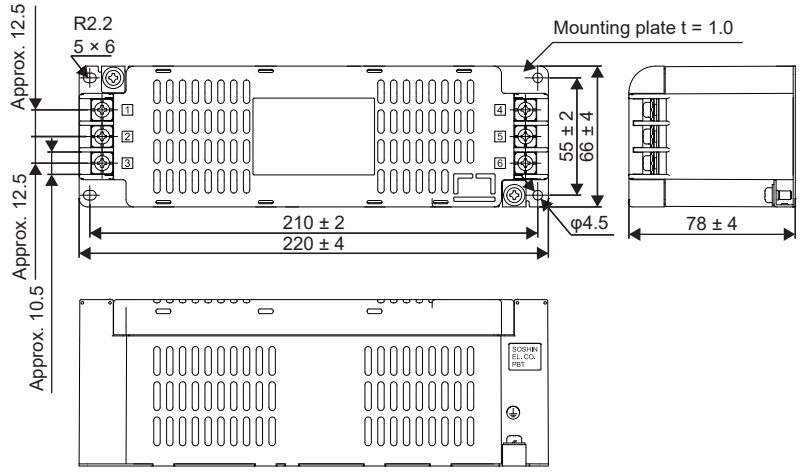

• HF3040C-SZB

[Unit: mm]

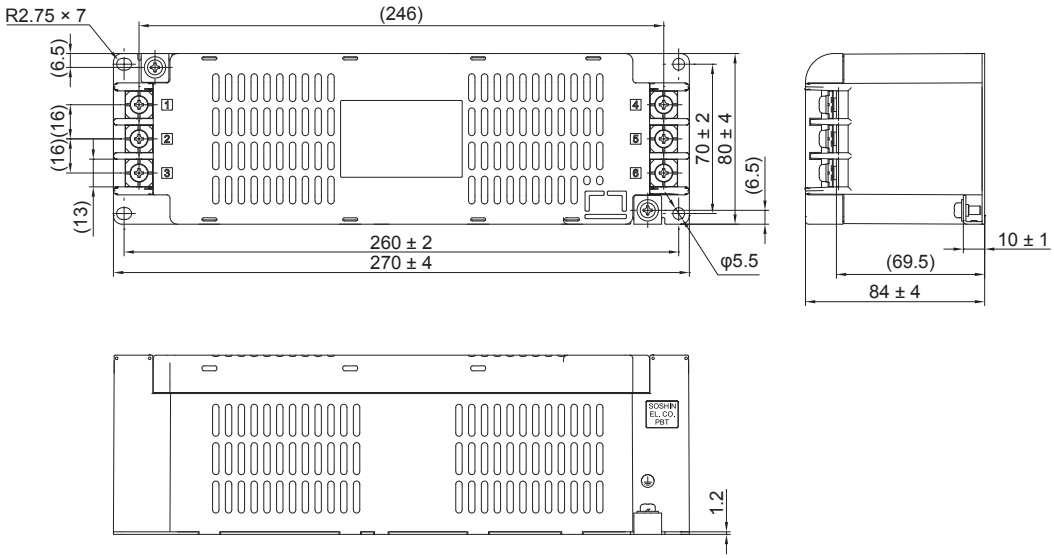

• HF3030C-SZL/HF3060C-SZL

[Unit: mm]

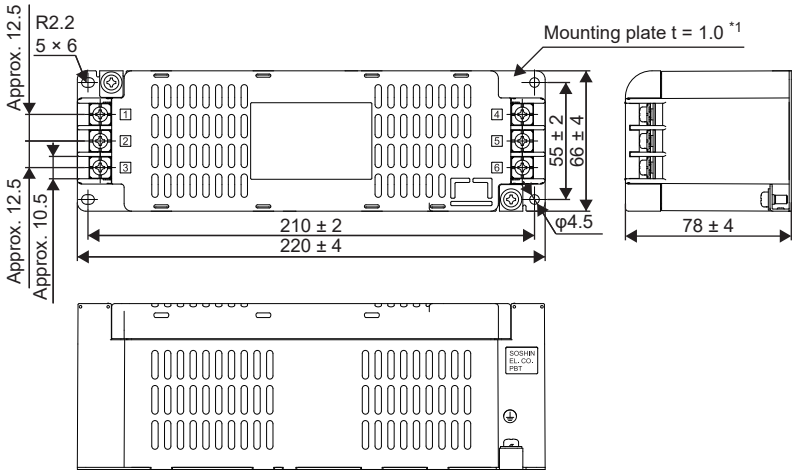

*1 This applies to HF3030C-SZL. The mounting plate thickness of HF3060C-SZL is 1.2 mm.

• HF3100C-SZL

[Unit: mm]

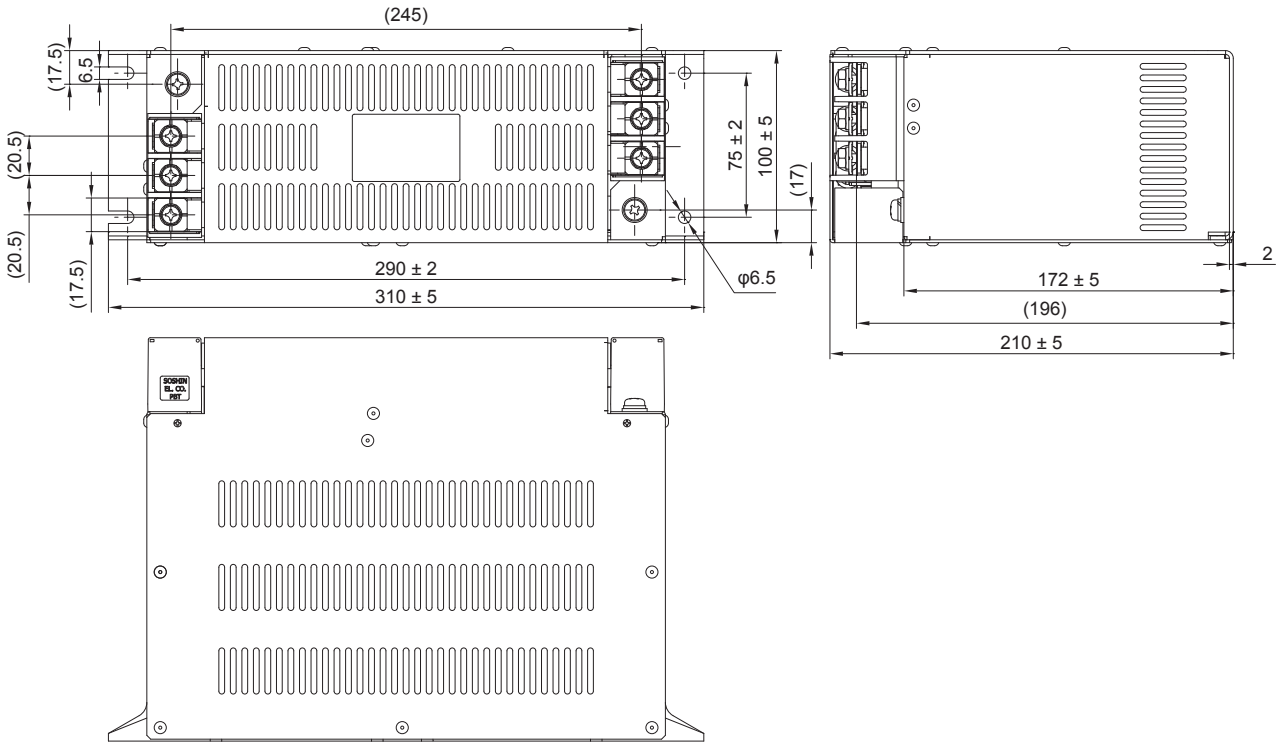

• HF3150C-SZL

[Unit: mm]

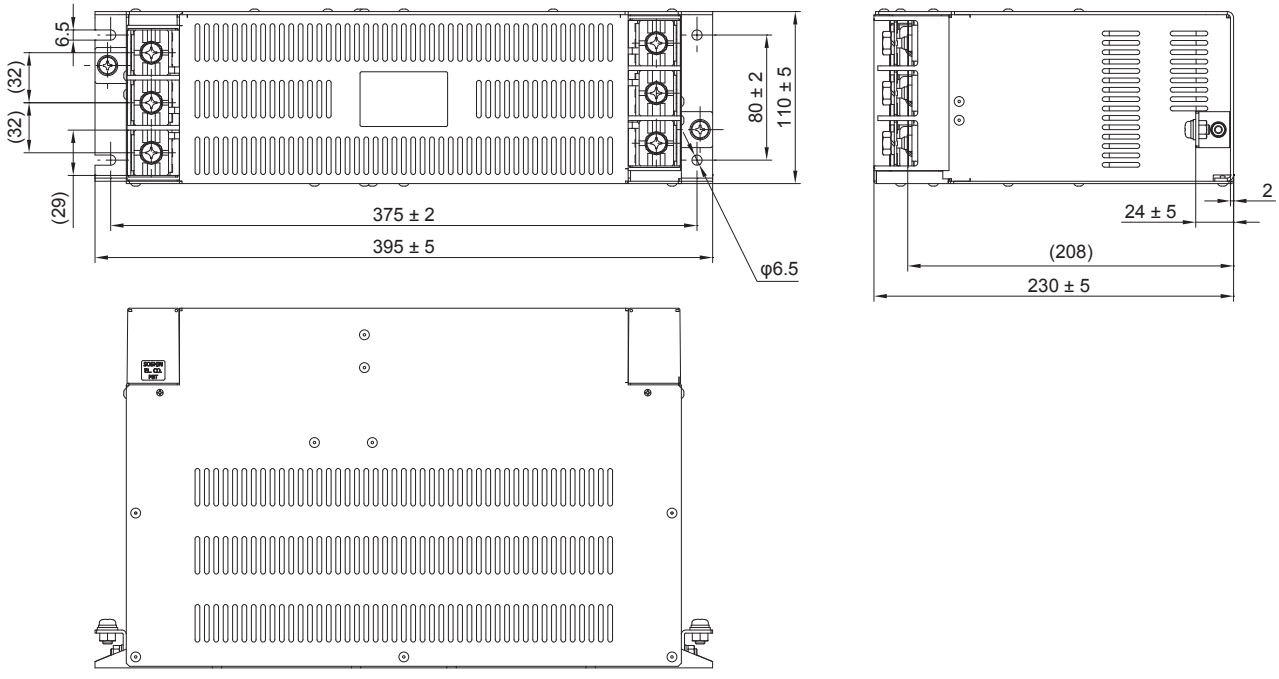

■Surge protector (recommended)

Point

• To use an EMC filter on the servo amplifier, a surge protector is required.

To prevent damage due to surges (such as lightning and sparks) applied to the AC power supply lines, connect the following surge protectors to the main circuit power supply (L1/L2/L3).

Surge protector model	Maximum continuous operating voltage 50/60 Hz	DC operating start voltage	Voltage protection level	Nominal discharge current 8/20 µs	Maximum discharge current 8/20 µs	Impulse current life 8/20 µs - 1000 A	Manufacturer
RSPD-250-U4	3-phase 250 V AC	700 V ± 25 %	1300 V	2500 A	5000 A	About 300 times	Okaya Electric Industries
RSPD-500-U4	3-phase 500 V AC	1300 V ± 25 %	2000 V	2500 A	5000 A	About 300 times	Okaya Electric Industries
LT-CS32G801WS	3-phase 275 V AC	660 V ± 10 %	1400 V	5000 A	8000 A	About 1000 times	Soshin Electric

• RSPD series (Okaya Electric Industries)

[Unit: mm]

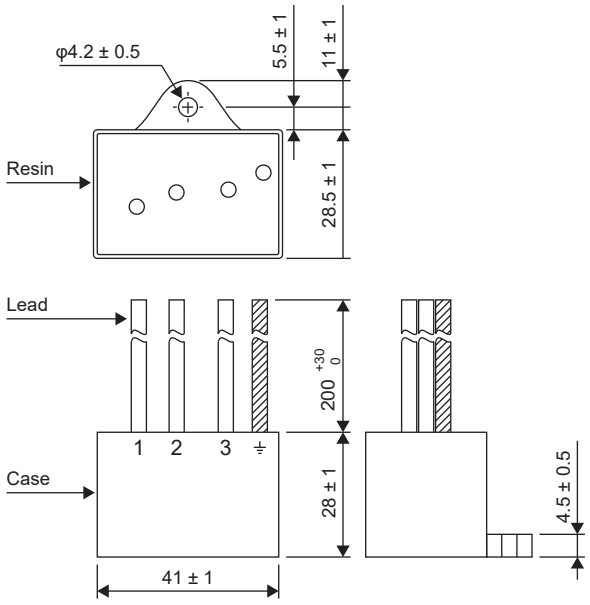

• LT-CS-WS series (Soshin Electric)

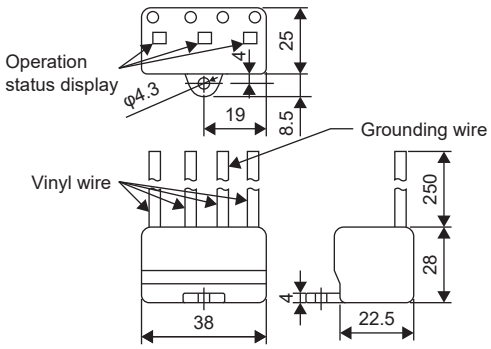

6.18 MR-J3-D05 safety logic unit

Contents of the package

Open the package and check the contents.

Packed articles	Quantity
MR-J3-D05 safety logic unit	1
CN9 connector (1-1871940-4 TE Connectivity)	1
CN10 connector (1-1871940-8 TE Connectivity)	1
MR-J3-D05 safety logic unit installation guide	1

Terms related to safety

Stop function for IEC/EN 61800-5-2

■STO function (Refer to IEC/EN 61800-5-2: 2016 4.2.2.2 STO.)

This is a function of MR-J5 series servo amplifiers.

The STO function shuts off energy to servo motors, thus removing torque. For MR-J5 series servo amplifiers, the energy is shut off by turning off the power supply electronically in the servo amplifier.

The purpose of this function is as follows.

- Uncontrolled stop according to stop category 0 of IEC/EN 60204-1
- Preventing unexpected restart

■SS1 function (Refer to IEC/EN 61800-5-2: 2016 4.2.2.3C Safe stop 1 temporal delay.)

The SS1 function activates the STO function after the predetermined delay time passes from the start of deceleration. The delay time can be set with the MR-J3-D05.

The purpose of this function is as follows. This function is available when the MR-J3-D05 and an MR-J5 series servo amplifier are combined.

- Controlled stop according to stop category 1 of IEC/EN 60204-1

Emergency operation for IEC/EN 60204-1

■Emergency stop (Refer to IEC/EN 60204-1: 2016 9.2.5.4.2 Emergency Stop.)

In every operation mode, this must take precedence over all the other functions and operations. Stop category 0 or 1 must apply to the power supply for the mechanical drive part, which can be the cause of hazardous situations. Even if the cause of the emergency state has been removed, the power must not be restarted.

■Emergency shut-off (Refer to IEC/EN 60204-1: 2016 9.2.5.4.3 Emergency Switching OFF.)

This shuts off energy to all or part of the equipment when there is a risk of electric shock or any other electrical-based issue.

⚠ WARNING

• An inappropriately installed safety device or system may lead to an operation status where safety cannot be assured, and a serious or fatal accident may occur.

Precautions

The following basic safety instructions must be read carefully and fully to prevent injury to persons or damage to property. Only qualified personnel are authorized to install, startup, repair, or adjust the machines in which these components are installed.

They must be familiar with all applicable local regulations and laws in which machines with these components are installed, particularly the standards mentioned in this user's manual and the requirements described in ISO/EN ISO 13849-1:2015, EN IEC 62061, EN 61508, IEC/EN 61800-5-2, and IEC/EN 60204-1.

The staff responsible for this work must be given express permission from the company to perform startup, programming, configuration, and maintenance of the machine in accordance with the safety standards.

As described in IEC/EN 61800-5-2, the STO function (Safe Torque Off) only prevents the supply of energy from the MR-J5 series servo amplifier to the servo motor. Therefore, in situations where another power source may independently operate the servo motor, additional safety measures, such as brakes and counterweights, must be implemented.

Residual risks

Machine manufacturers are responsible for all risk evaluations and all associated residual risks. Below are residual risks associated with the STO/EMG functions. Mitsubishi Electric is not liable for any accidents such as damage and injuries caused by these risks.

- The SS1 function only guarantees the delay time before STO/EMG becomes enabled. The company, group, or individuals in charge of installation and delegation of the safety systems are fully responsible for correctly setting this delay time. In addition, certification regarding safety standards over the whole system is required.
- The servo motor stops with a dynamic brake or by coasting in any of the following cases: when the SS1 delay time is shorter than the servo motor deceleration time, when the forced stop function has a problem, or when STO/EMG is enabled during servo motor rotation.
- For proper installation, wiring, and adjustment, thoroughly read the installation guide of each individual safety related component.
- For all devices related to safety, such as relays and sensors, use devices that satisfy the safety standards. A Certification Body has confirmed that the Mitsubishi Electric safety-related components mentioned in this manual satisfy ISO/EN ISO 13849-1:2015 Category 3, PL d, EN IEC 62061, and EN 61508 SIL 2.
- Safety is not assured until the safety-related components of the system are completely installed and adjusted.
- When replacing an MR-J5 series servo amplifier or the MR-J3-D05, confirm that the new servo amplifier or the new unit is the same as the one being replaced. Once installed, verify the performance of the functions before commissioning the system.
- Perform all risk assessments and obtain safety level certifications on the machine or the whole system. As the final safety certification of the system, we recommend using a Certification Body.
- To prevent malfunctions from accumulating, perform the appropriate malfunction checks at the regular intervals defined in the safety standards. Regardless of the system safety level, malfunction checks should be performed at least once per year.
- If the upper and lower power modules in the servo amplifier are shorted and damaged simultaneously, the servo motor may make a half revolution at a maximum.

Block diagram and timing chart

Function block diagram

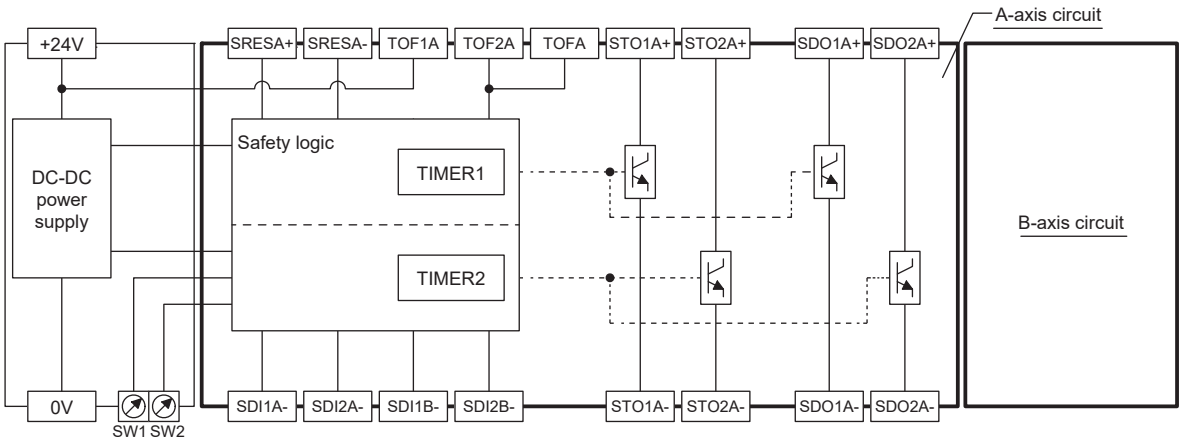

Operation sequence

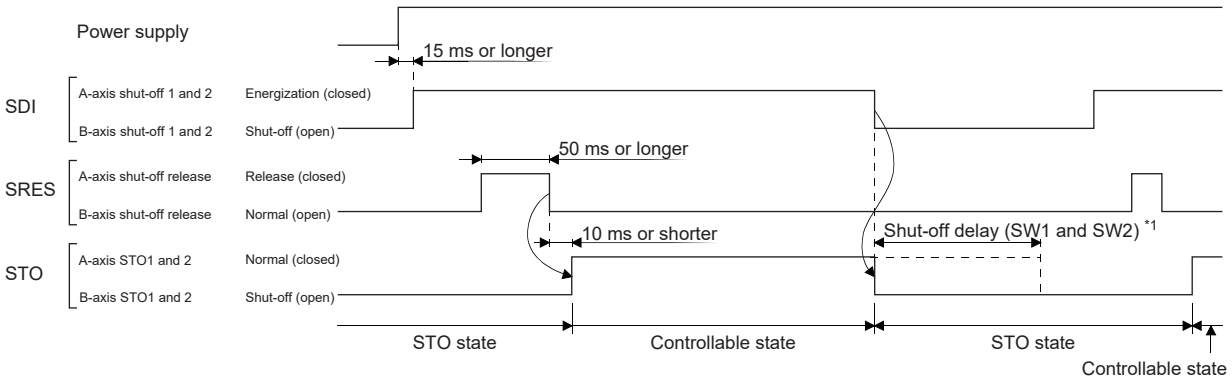

*1 Refer to the following.
☞ Page 387 Rotary switch settings

Maintenance and disposal

- The MR-J3-D05 is provided with an LED display to check abnormalities for maintenance.
- When disposing of this unit, follow the laws and regulations of each country (region).

Functions and configuration

Outline

The MR-J3-D05 has two systems of output for the SS1 function (delay time) and the STO function each.

Specifications

Safety logic unit model		MR-J3-D05
Control circuit power supply	Voltage	DC 24 V
	Permissible voltage fluctuation	24 V DC ±10 %
	Required current capacity [A]	0.5 *1*2
Supported system		2 systems (A-axis, B-axis independent)
Shut-off input		2 points (double wiring) SDI_: Source/sink supported *3
Shut-off release input		1 point (double wiring) SRES_: Source/sink supported *3
Feedback input		1 point (double wiring) TOF_: Source supported *3
Input method		Photocoupler insulation, 24 V DC (externally supplied), 5.4 kΩ internal resistance
Shut-off output		4 points (double wiring) STO_: Source supported *3
		4 points (double wiring) SDO_: Source/sink supported *3
Output method		Photocoupler insulation, open-collector type Permissible current: 40 mA or less per point, inrush current: 100 mA or less per point
Delay setting time		A-axis: Select from 0 s,1.4 s, 2.8 s, 5.6 s, 9.8 s, and 30.8 s. B-axis: Select from 0 s,1.4 s, 2.8 s, 9.8 s, and 30.8 s. Accuracy: ±2 %
Safety sub-function		STO, SS1 (IEC/EN 61800-5-2) EMG STOP, EMG OFF (IEC/EN 60204-1)
Safety performance	Standard	ISO 13849-1:2015 Category 3 PL d, EN IEC 62061, EN 61508 SIL2, IEC 61800-5-2
	Response performance (when the delay setting time is 0 s) *4	10 ms or less (STO input off → shut-off output off)
	Mean time to dangerous failure (MTTFd)	MTTFd ≥ 100 [years] (516a)
	Diagnostic coverage (DC)	DC = Medium, 93.1 [%]
	Probability of dangerous Failure per Hour (PFH)	PFH = 4.75×10^{-9} [1/h]
Global standards	CE marking	LVD: EN 61800-5-1 EMC: EN 61800-3 MD: EN ISO 13849-1:2015, EN 61800-5-2, EN IEC 62061
Structure		Natural cooling, open (IP rating: IP00)
Environment	Ambient temperature	Operation: 0 °C to 55 °C (non-freezing), Storage: -20 °C to 65 °C (non-freezing)
	Ambient humidity	Operation: 5 %RH to 90 %RH (non-condensing), Storage: 5 %RH to 90 %RH (non-condensing)
	Ambience	Indoors (no direct sunlight); no corrosive gas, inflammable gas, oil mist or dust
	Altitude	1000 m or less
	Vibration resistance	5.9 m/s^2, 10 Hz to 55 Hz (in each of the X, Y, and Z directions)
Mass [kg]		0.2 (including CN9 and CN10 connectors)

*1 An inrush current of approximately 1.5 A flows momentarily at power-on. Take the inrush current into account when selecting a power supply.

*2 The service life lasts until the power is turned on 100000 times.

*3 A number and axis name are put in the _ portion of a signal name.

*4 For details of test pulse input, contact your local sales office.

When using MR-J3-D05 for MR-J5 series servo amplifiers

■System configuration example

The connection destinations of the STO switch and STO release switch are shown in the following figure.

Point

MR-D05UDL_M (STO cable) cannot be used.

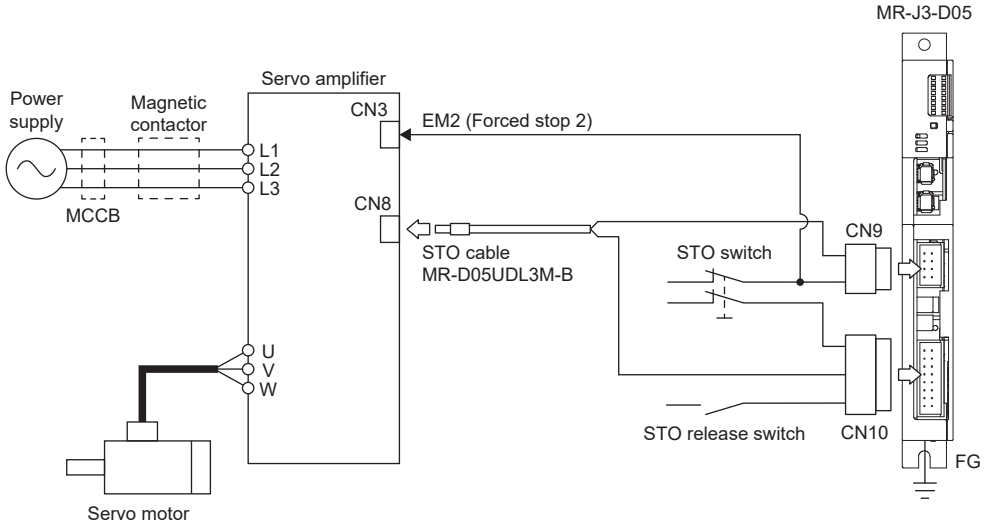

6

■Connection example

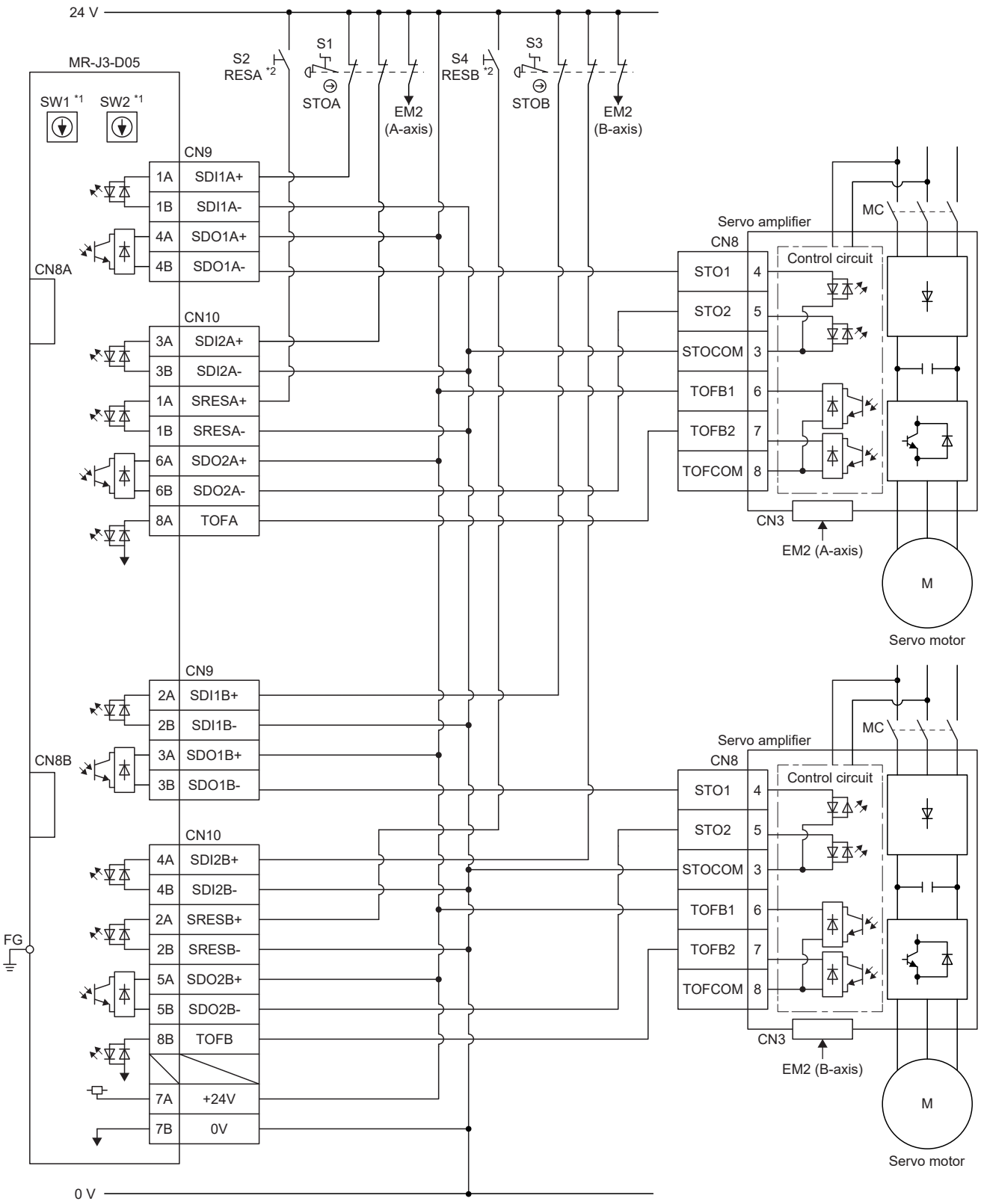

*1 Set a delay time for STO output with SW1 and SW2. These switches are located in a recessed area in the MR-J3-D05 to prevent accidental setting changes.

*2 To release the STO state (base circuit shut-off), turn on RESA and RESB then turn them off.

Signal

Connectors and pin assignment

■CN8A

Device name	Symbol	Pin No.	Function and usage	I/O signal interface type
A-axis STO1	STO1A- STO1A+	1 4	Outputs STO1 to the A-axis drive system. Outputs the same signal as A-axis STO2. STO state (base circuit shut-off): Between STO1A+ and STO1A- becomes open. STO release state (driving): Between STO1A+ and STO1A- becomes closed.	O
A-axis STO2	STO2A- STO2A+	5 6	Outputs STO2 to the A-axis drive system. Outputs the same signal as A-axis STO1. STO state (base circuit shut-off): Between STO2A+ and STO2A- becomes open. STO release state (driving): Between STO2A+ and STO2A- becomes closed.	O
A-axis STO state	TOF2A TOF1A	7 8	Inputs the STO state of the A-axis drive system. STO state (base circuit shut-off): Open between TOF2A and TOF1A. STO release state (driving): Close between TOF2A and TOF1A.	I

■CN8B

Device name	Symbol	Pin No.	Function and usage	I/O signal interface type
B-axis STO1	STO1B- STO1B+	1 4	Outputs STO1 to the B-axis drive system. Outputs the same signal as B-axis STO2. STO state (base circuit shut-off): Between STO1B+ and STO1B- becomes open. STO release state (driving): Between STO1B+ and STO1B- becomes closed.	O
B-axis STO2	STO2B- STO2B+	5 6	Outputs STO2 to the B-axis drive system. Outputs the same signal as B-axis STO1. STO state (base circuit shut-off): Between STO2B+ and STO2B- becomes open. STO release state (driving): Between STO2B+ and STO2B- becomes closed.	O
B-axis STO state	TOF2B TOF1B	7 8	Inputs the STO state of the B-axis drive system. STO state (base circuit shut-off): Open between TOF2B and TOF1B. STO release state (driving): Close between TOF2B and TOF1B.	I

■CN9

Device name	Symbol	Pin No.	Function and usage	I/O signal interface type
A-axis shut-off 1	SDI1A+ SDI1A-	1A 1B	Inputs Safety switch to the A-axis drive system. Input the same signal as A-axis shut-off 2. STO state (base circuit shut-off): Open between SDI1A+ and SDI1A-. STO release state (driving): Close between SDI1A+ and SDI1A-.	DI-1
B-axis shut-off 1	SDI1B+ SDI1B-	2A 2B	Inputs Safety switch to the B-axis drive system. Input the same signal as B-axis shut-off 2. STO state (base circuit shut-off): Open between SDI1B+ and SDI1B-. STO release state (driving): Close between SDI1B+ and SDI1B-.	DI-1
A-axis SDO1	SDO1A+ SDO1A-	4A 4B	Outputs STO1 to the A-axis drive system. Outputs the same signal as A-axis SDO2. STO state (base circuit shut-off): Between SDO1A+ and SDO1A- becomes open. STO release state (driving): Between SDO1A+ and SDO1A- becomes closed.	DO-1
B-axis SDO1	SDO1B+ SDO1B-	3A 3B	Outputs STO1 to the B-axis drive system. Outputs the same signal as B-axis SDO2. STO state (base circuit shut-off): Between SDO1B+ and SDO1B- becomes open. STO release state (driving): Between SDO1B+ and SDO1B- becomes closed.	DO-1

■CN10

Device name	Symbol	Pin No.	Function and usage	I/O signal interface type
A-axis shut-off 2	SDI2A+ SDI2A-	3A 3B	Inputs Safety switch to the A-axis drive system. Input the same signal as A-axis shut-off 1. STO state (base circuit shut-off): Open between SDI2A+ and SDI2A-. STO release state (driving): Close between SDI2A+ and SDI2A-.	DI-1
B-axis shut-off 2	SDI2B+ SDI2B-	4A 4B	Inputs Safety switch to the B-axis drive system. Input the same signal as B-axis shut-off 1. STO state (base circuit shut-off): Open between SDI2B+ and SDI2B-. STO release state (driving): Close between SDI2B+ and SDI2B-.	DI-1
A-axis shut-off release	SRESA+ SRESA-	1A 1B	Releases the STO state (base circuit shut-off) of the A-axis drive system. Turning the state between SRESA+ and SRESA- from on (connected) to off (released) releases the STO state (base circuit shut-off) of the A-axis drive system.	DI-1
B-axis shut-off release	SRESB+ SRESB-	2A 2B	Releases the STO state (base circuit shut-off) of the B-axis drive system. Turning the state between SRESB+ and SRESB- from on (connected) to off (released) releases the STO state (base circuit shut-off) of the B-axis drive system.	DI-1
A-axis SDO2	SDO2A+ SDO2A-	6A 6B	Outputs STO2 to the A-axis drive system. Outputs the same signal as A-axis SDO1. STO state (base circuit shut-off): Between SDO2A+ and SDO2A- becomes open. STO release state (driving): Between SDO2A+ and SDO2A- becomes closed.	DO-1
B-axis SDO2	SDO2B+ SDO2B-	5A 5B	Outputs STO2 to the B-axis drive system. Outputs the same signal as B-axis SDO1. STO state (base circuit shut-off): Between SDO2B+ and SDO2B- becomes open. STO release state (driving): Between SDO2B+ and SDO2B- becomes closed.	DO-1
Control circuit power supply	+24V	7A	Connect the positive side of the 24 V DC power supply.	—
Control circuit power supply GND	0V	7B	Connect the negative side of the 24 V DC power supply.	—
A-axis STO state	TOFA	8A	Connected with TOF2A internally.	—
B-axis STO state	TOFB	8B	Connected with TOF2B internally.	—

Interface

For the MR-J3-D05, source type I/O interfaces can be used.

■Sink I/O interface (CN9, CN10 connectors)

- Digital input interface DI-1

This is an input circuit in which the photocoupler cathode side is the input terminal. Transmit signals from a sink (open-collector) type transistor output, relay switch, etc.

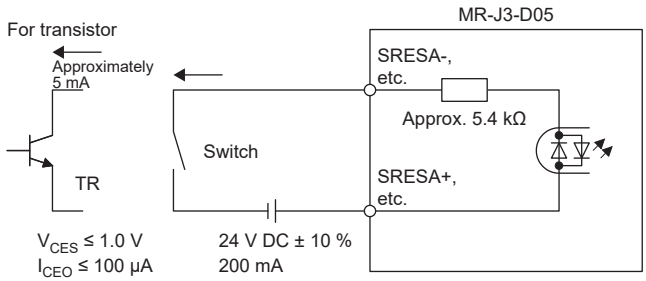

• Digital output interface DO-1

This is a circuit in which the collector of the output transistor is the output terminal. When the output transistor is turned on, the current flows to the collector terminal.

A lamp, relay, or photocoupler can be driven. Install a diode (D) for an inductive load, or install an inrush current suppressing resistor (R) for a lamp load. (Rated current: 40 mA or less, maximum current: 50 mA or less, inrush current: 100 mA or less) A maximum of 2.6 V voltage drop occurs internally.

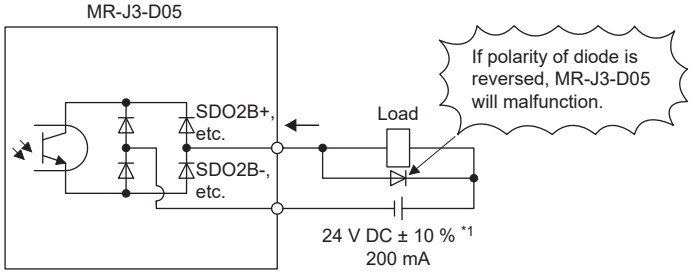

*1 If the voltage drop (maximum of 2.6 V) interferes with the relay operation, apply high voltage (maximum of 26.4 V) from external source.

■Source I/O interface (CN9, CN10 connectors)

• Digital input interface DI-1

This is an input circuit in which the anode of the photocoupler is the input terminal. Transmit signals from a source (open-collector) type transistor output, relay switch, etc.

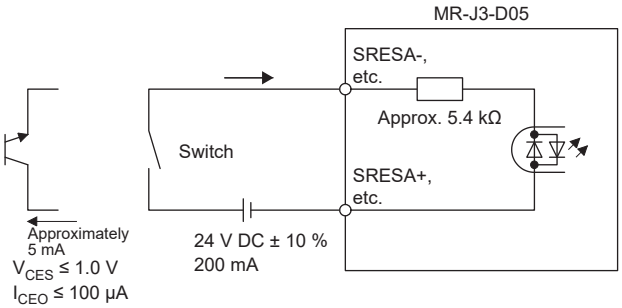

• Digital output interface DO-1

This is a circuit in which the emitter of the output transistor is the output terminal. When the output transistor is turned on, the current flows from the output terminal to a load.

A maximum of 2.6 V voltage drop occurs in the MR-J3-D05.

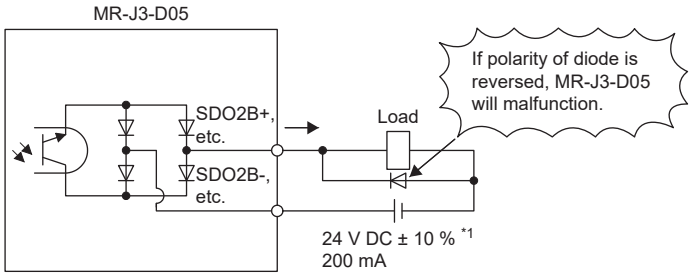

*1 If the voltage drop (maximum of 2.6 V) interferes with the relay operation, apply high voltage (maximum of 26.4 V) from external source.

Wiring CN9, CN10 connectors

Be careful when handling tools during wiring work.

■Stripping wire

- Use wire of applicable wire size from 24 to 20 AWG (0.22 mm^2 to 0.5 mm^2) (recommended wire: UL 1007 recommended), and process it so that its stripped length is 7.0 mm ± 0.3 mm. Before using, check the length of the stripped section with a gage or other tool.
- If the stripped wire is bent, frayed, or wound too thick, correct it by lightly twisting the wire or manipulating it as necessary, and check the length of the stripped section before using it. In addition, do not use excessively deformed wire.
- When processing the cut surface of wire and the stripped surface of conductor, make them smooth.

■Connecting wires

When connecting wires, do so with the receptacle assembly pulled out of the head connector. Wiring while connectors are inserted in the servo amplifier may damage the connectors or the board.

- Connecting wires with insertion/extraction tool (1891348-1 or 2040798-1)

Dimensions and mass

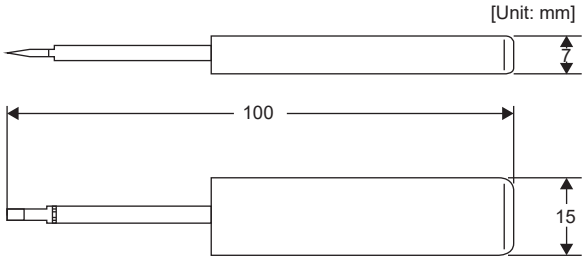

Mass: Approx. 20 g

Connecting wires

1. Check the model numbers of the housing, contact, and tool to be used.
2. Insert the tool diagonally in relation to the terminal block.

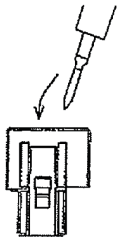

3. Insert the tool until it touches the surface of the terminal block. The tool becomes perpendicular to the terminal block at this point.

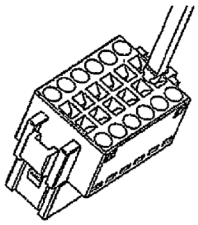

4. Insert the wire until it reaches the stop. When doing so, slightly twist the core wire so that it does not fray.

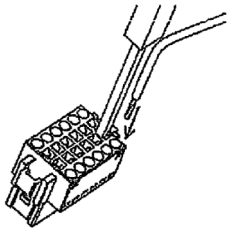

It is easier to insert the wire by inserting it diagonally while twisting the tool a little.

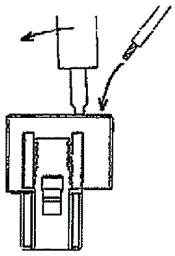

5. Pull out the tool.

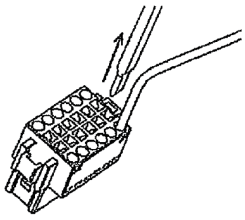

• Connecting wires with a screwdriver

If using a screwdriver when connecting wires, do not insert the screwdriver with too much force. Doing so may damage the housing or spring. Be careful when working.

Applicable screwdrivers

Screwdriver shape φ2.3 mm	Screwdriver shape φ2.5 mm
Shaft diameter: 2.3 mm ± 0.05 mm Length: 120 mm or less Blade width: 2.3 mm Blade thickness: 0.25 mm Tip inclination: 18° ± 1° 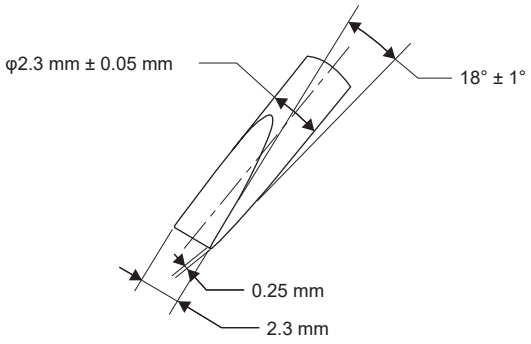 	Shaft diameter: 2.5 mm ± 0.05 mm Length: 120 mm or less Blade width: 2.5 mm Blade thickness: 0.3 mm Tip inclination: 12° ± 1° 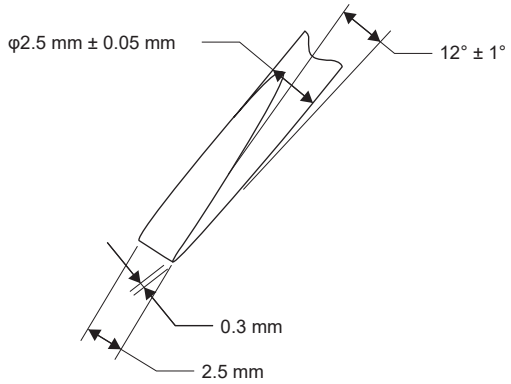

Connecting wires

1. Insert the screwdriver at a slight diagonal into the front slot, push the spring up as if prying it, and in that state, insert the wire until it reaches the stop. Take care not to insert the screwdriver with too much force as this may damage the housing or spring. Never insert a screwdriver into the round hole for wire. Doing so will damage the connector.
2. Continue to press on the wire and pull out the screwdriver to complete the wire connection.
3. Pull the wire lightly to confirm that the wire is surely connected.
4. To remove the wire, as when connecting the wire, push the spring down with a screwdriver and pull the wire out.

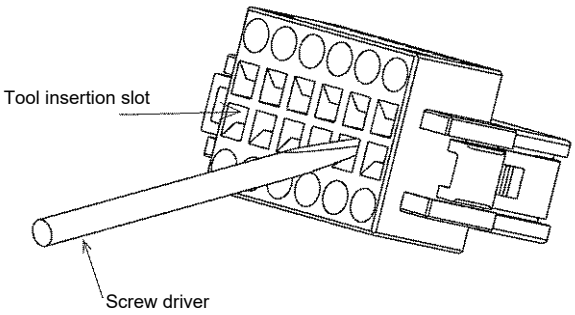

■Inserting the connector

Ensure the connector is straight, then insert it into the socket until you hear and feel it click into place. When removing the connector, press down the locking part completely, then pull out the connector. If the connector is pulled out while the locking part pressed down only partway, the lock may get caught and cause damage to the housing, contacts, or wires.

■Applicable wires

The following table lists applicable wires that can be used.

Conductor area	
mm^2	AWG
0.22	24
0.34	22
0.50	20

■Other precautions

- Fix a cable tie at a distance of A x 1.5 or more from the connector end surface.

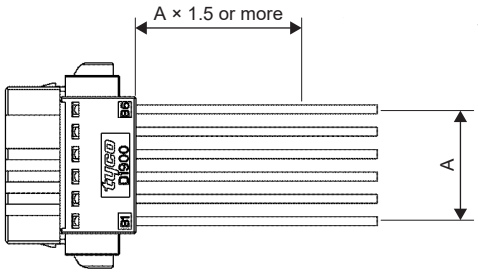

- Prevent the wire from being pulled excessively after the connecter is inserted in the servo amplifier.

Wiring FG

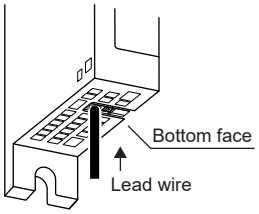

- Usable wire range

Solid wire: φ0.4 mm to 1.2 mm (26 to 16 AWG)

Stranded wire: 0.2 mm^2 to 1.25 mm^2 (24 to 16 AWG), wire strand diameter 0.18 mm or more

LED display

The LEDs show I/O statuses and faults for the A-axis and B-axis and whether power is being supplied.

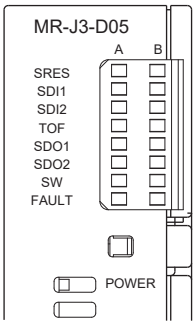

LED	Description	LED	
		Column A	Column B
SRES	Shut-off release monitor LED Off: Shut-off release is off. (The switch contact is open.) On: Shut-off release is on. (The switch contact is closed.)	A-axis	B-axis
SDI1	Shut-off 1 monitor LED Off: Shut-off 1 is off. (The switch contact is closed.) On: Shut-off 1 is on. (The switch contact is open.)		
SDI2	Shut-off 2 monitor LED Off: Shut-off 2 is off. (The switch contact is closed.) On: Shut-off 2 is on. (The switch contact is open.)		
TOF	STO status monitor LED Off: Not in the STO state. On: In the STO state.		
SDO1	SDO1 monitor LED Off: Not in the STO state. On: In the STO state.		
SDO2	SDO2 monitor LED Off: Not in the STO state. On: In the STO state.		
SW	Shut-off delay setting check monitor LED Off: The settings of SW1 and SW2 do not match. On: The settings of SW1 and SW2 are the same.		
FAULT	FAULT LED Off: Operating as specified. (STO monitoring state) On: FAULT has occurred.		
POWER	Power supply Off: MR-J3-D05 power shut-off. On: MR-J3-D05 power on.	—	

Rotary switch settings

The rotary switches are used for shutting off the power after a control stop by the SS1 function.
Set the delay time from when the STO shut-off switch is pressed until STO is output. In addition, set SW1 and SW2 to the same value. The table below lists the combinations of delay times according to settings.
Note that the settings cannot be changed while the power is on. Also, take actions such as sealing the switches with stickers so that the settings will not be changed after shipment, and inform the end user that changing settings is prohibited.
0 to F in the table are the setting values for the rotary switches (SW1 and SW2).

Rotary switch settings and A-axis/B-axis delay time [s]		B-axis					
		0 s	1.4 s	2.8 s	5.6 s	9.8 s	30.8 s
A-axis	0 s	0	1	2	—	3	4
	1.4 s	—	—	5	—	6	7
	2.8 s	—	—	8	—	9	A
	5.6 s	—	—	—	—	B	C
	9.8 s	—	—	—	—	D	E
	30.8 s	—	—	—	—	—	F

Troubleshooting

If the power does not turn on or if the FAULT LED is on, take corrective actions according to the following table.

Event	Description	Cause		Action
The power does not turn on.	Even when the power is turned on, the power supply 3-digit, 7-segment LED does not light up.	1.	The 24 V DC power supply has malfunctioned.	Replace the 24 V DC power supply.
		2.	The wiring between the MR-J3-D05 and the 24 V DC power supply is disconnected or is in contact with other wiring.	Check the wiring.
		3.	The MR-J3-D05 has malfunctioned.	Replace the MR-J3-D05.
The FAULT LED is on.	The FAULT 3-digit, 7-segment LED for A-axis or B-axis remains on and does not turn off.	1.	Delay time setting mismatch	Check the settings of the rotary switches.
		2.	Switch input error	Check the input signal wiring or input signal sequence.
		3.	TOF signal error	Check the connection with the servo amplifier.
		4.	The MR-J3-D05 has malfunctioned.	Replace the MR-J3-D05.

Dimensions

[Unit: mm]

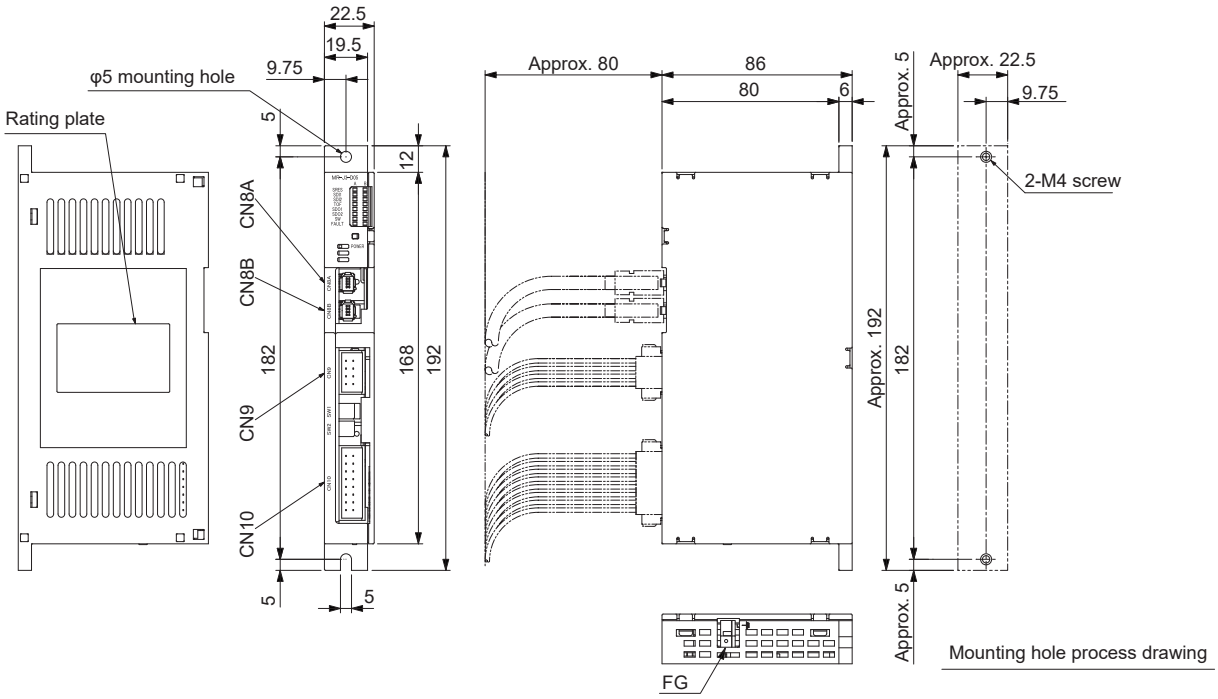

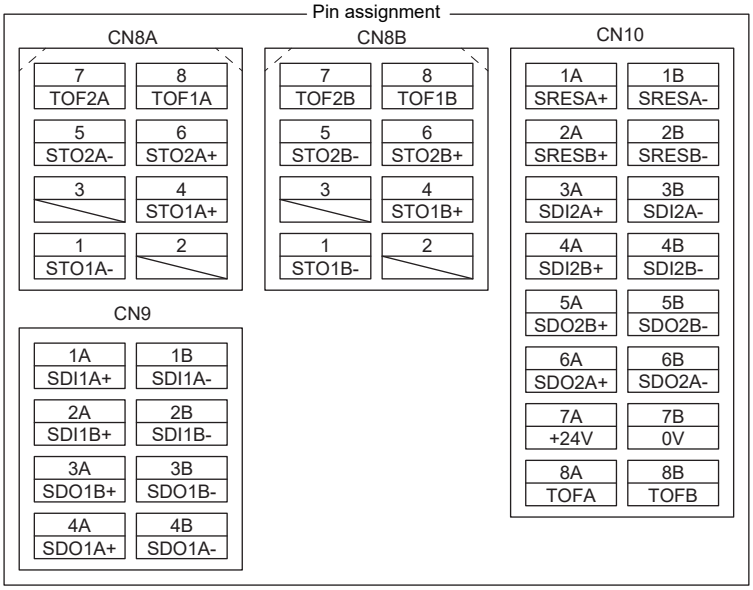

Mounting screw

Screw size: M4

Tightening torque: 1.2 N•m

Mass: 0.2 [kg]

Installation

Install the MR-J3-D05 in the specified orientation. Leave clearance between the MR-J3-D05 and the cabinet or other equipment.

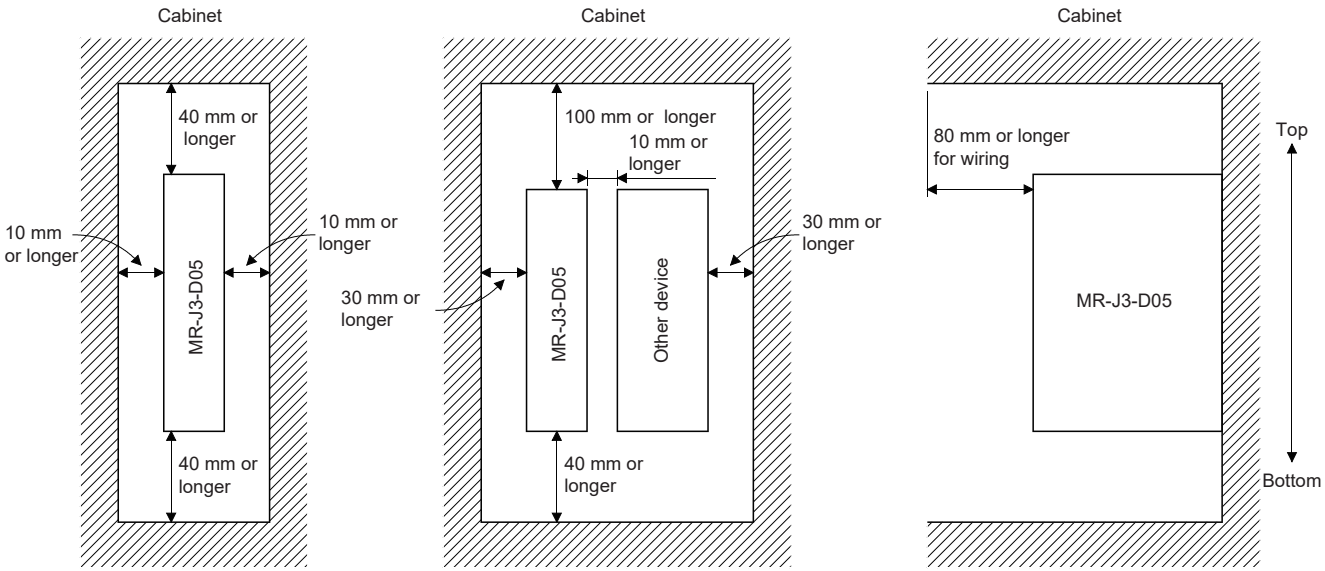

Combinations of cables and connectors

Point

MR-D05UDL_M (STO cable) cannot be used.

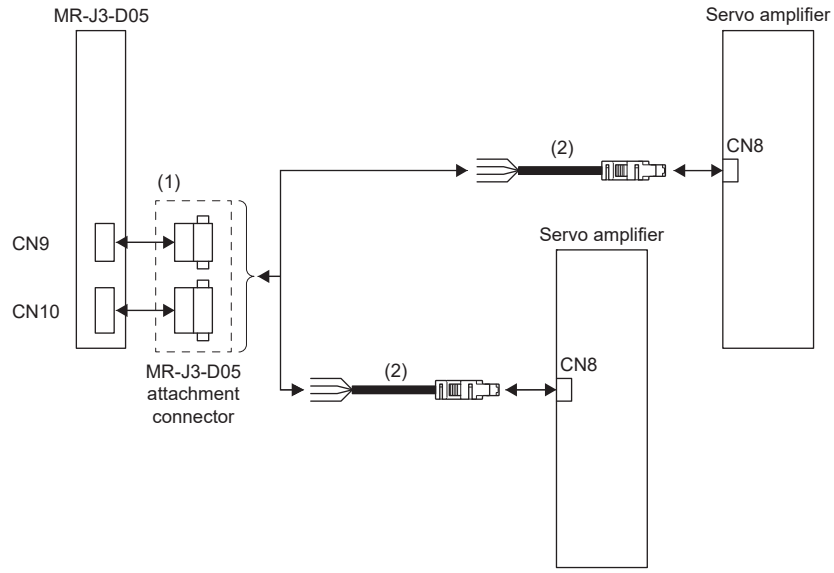

No.	Product name	Model	Description
(1)	Connector	Supplied with the MR-J3-D05	 CN9 connector: 1-1871940-4 (TE Connectivity)
			 CN10 connector: 1-1871940-8 (TE Connectivity)
(2)	STO cable	MR-D05UDL3M-B Cable length: 3 m	Connector set: 2069250-1 (TE Connectivity)

6.19 J5-CHP07-10P cabinet-mounting attachment

Using the cabinet-mounting attachment to install the servo amplifier into a cabinet enables you to tighten the installation screw with the screwdriver held horizontally.

Compatible models

- MR-J5-10_ to MR-J5-350_
- MR-J5W2-22_ to MR-J5W2-1010_
- MR-J5W3-222_, MR-J5W3-444_
- MR-CM3K
- MR-J5-60_4_ to MR-J5-350_4_

Dimensions

[Unit: mm]

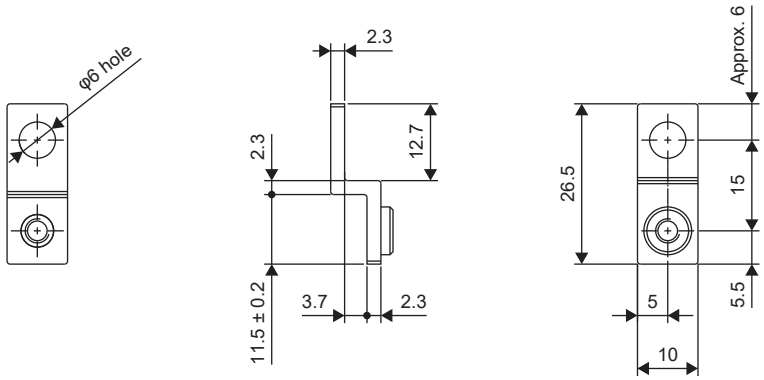

Plating: Trivalent chrome plated

View when installed

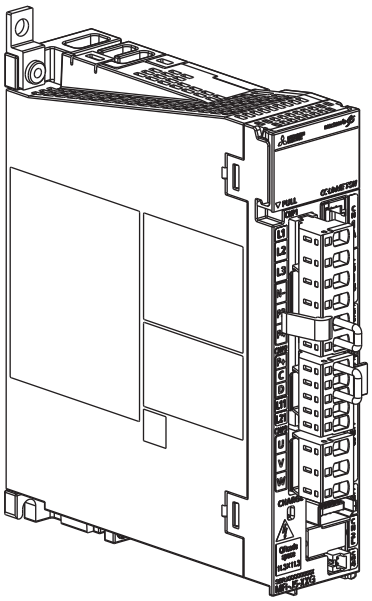

Fitting method

Install the attachment onto the servo amplifier before installing the servo amplifier into the cabinet.

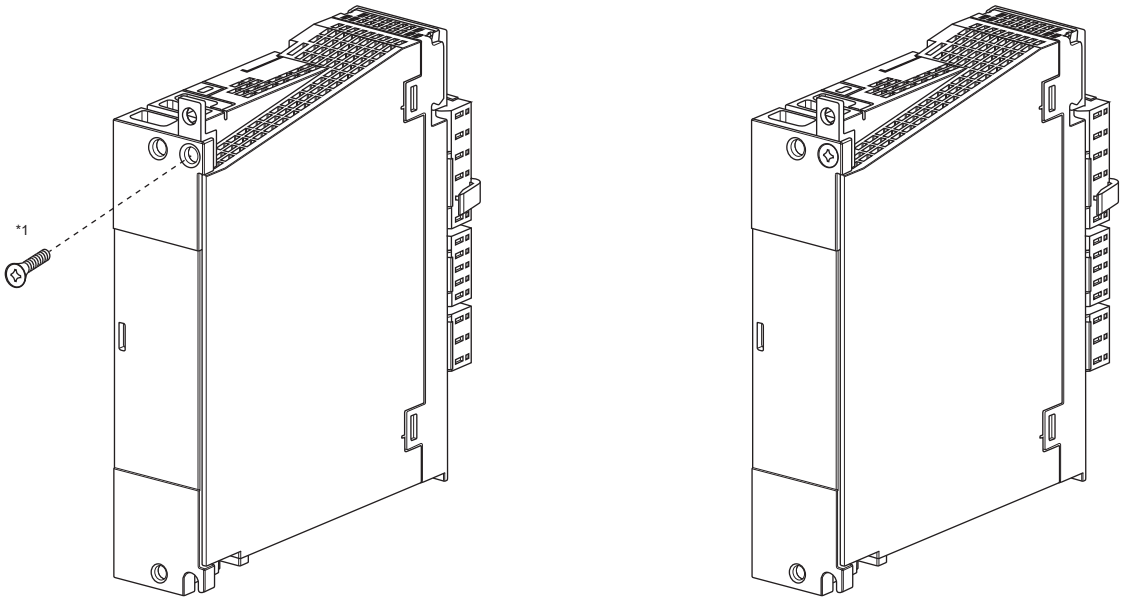

*1 Use one of the flat head screws included with the attachment. (Tightening torque: 1.2 [N•m])

Installation precautions

Ensure that the attachment is installed perfectly straight so that it does not protrude beyond the side of the module.
If the attachment is not straight, the hole in the bracket may not alight with the screw hole.
The attachment may come loose if it is installed at an angle and then forcibly moved into position. Loosen the screw before adjusting the position of the attachment.

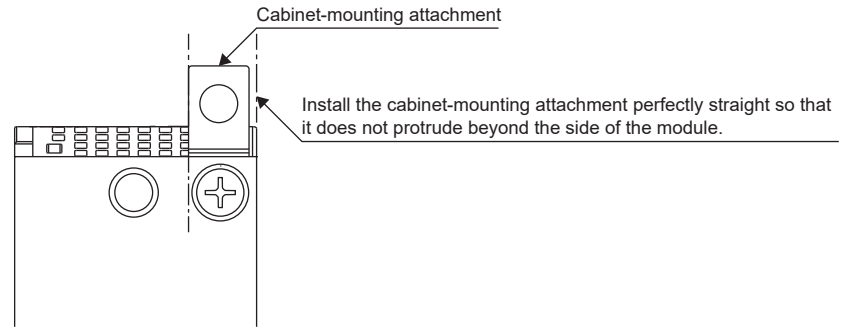

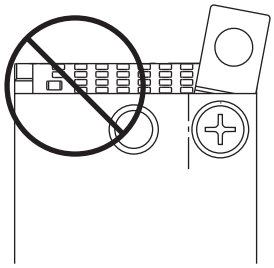

Components

Components are listed in the following table.

Packed articles	Quantity
Cabinet-mounting attachment	10
Flat head screw (M4)	10

Installation dimensions

Exterior dimensions at installation

Point

The following are examples of the MR-J5-10A servo amplifiers.

[Unit: mm]

Servo amplifier	Variable dimensions		
	A	B	C
MR-J5_10_	6	182.3	6
MR-J5_20_			
MR-J5_40_			
MR-J5_60_			
MR-J5_70_	12		12
MR-J5_100_			
MR-J5_200_	6		6
MR-J5_350_			
MR-J5W2_22_			
MR-J5W2_44_			
MR-J5W2_77_			
MR-J5W2_1010_			
MR-J5W3_222_			
MR-J5W3_444_			
MR-J5_60_4_	12	183	12
MR-J5_100_4_			
MR-J5_200_4_	6		6
MR-J5_350_4_			
MR-CM3K			

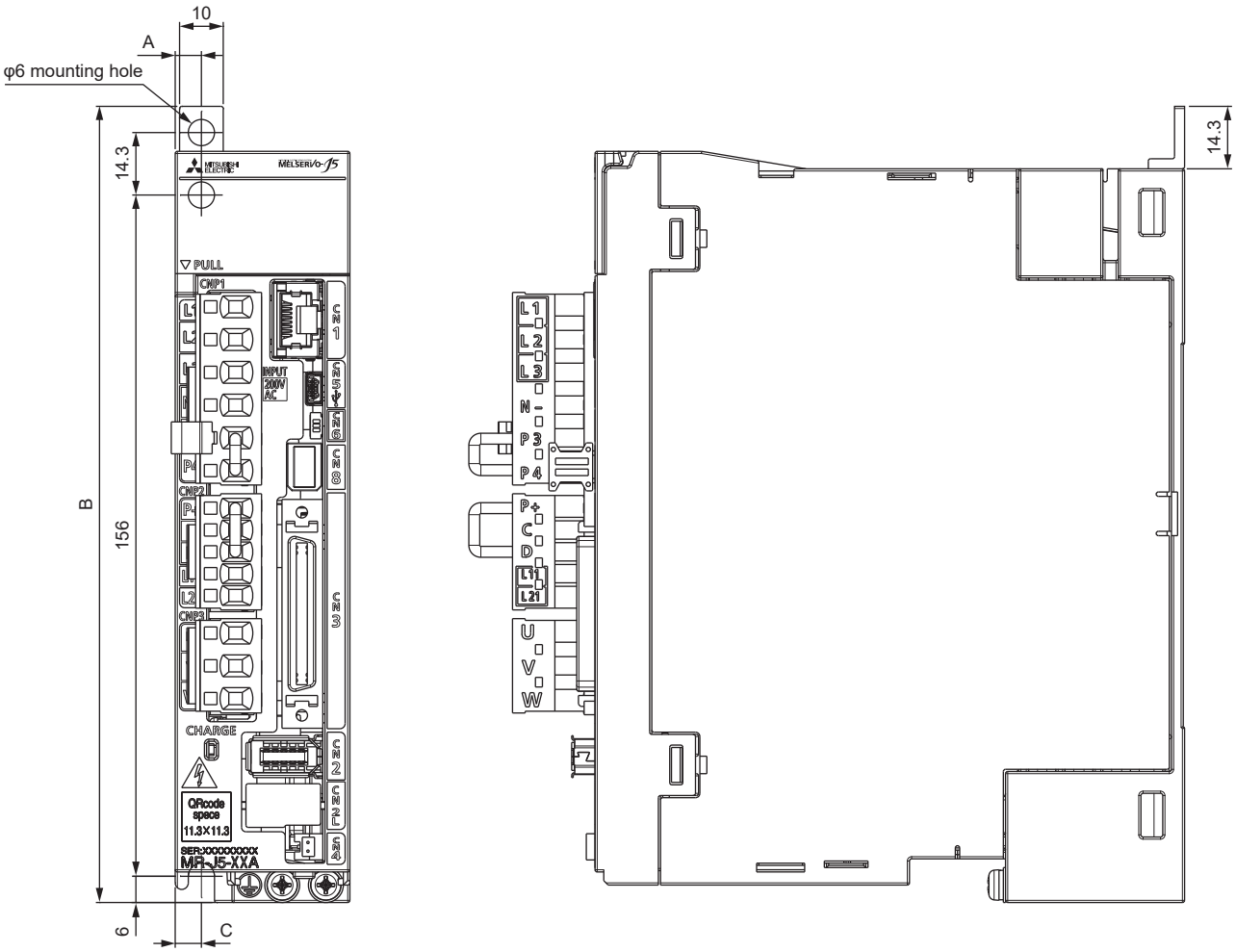
10
A
φ6 mounting hole
14.3
B
156
6
C
14.3
PULL
CHP1
CHP2
CHP3
CHARGE
INPUT
200V
AC
QRcode
space
11.3×11.3
MR-J5-XXA
L1
L2
L3
N
P3
P4
P+
C
D
L11
L21
U
V
W

Installation hole dimensions

■MR-J5-10_/MR-J5-20_/MR-J5-40_/MR-J5-60_/MR-CM3K

[Unit: mm]

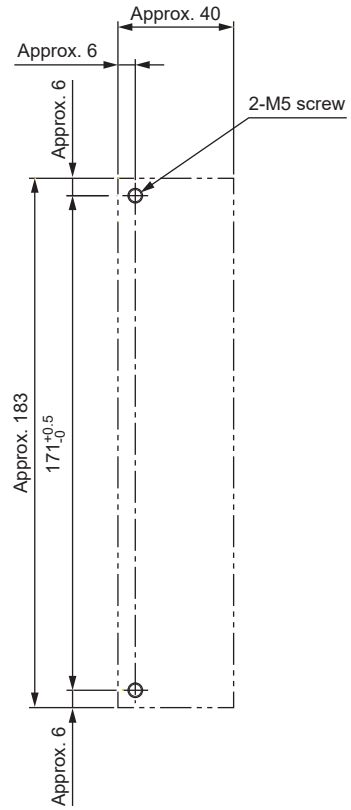

■MR-J5-70_/MR-J5-100_

[Unit: mm]

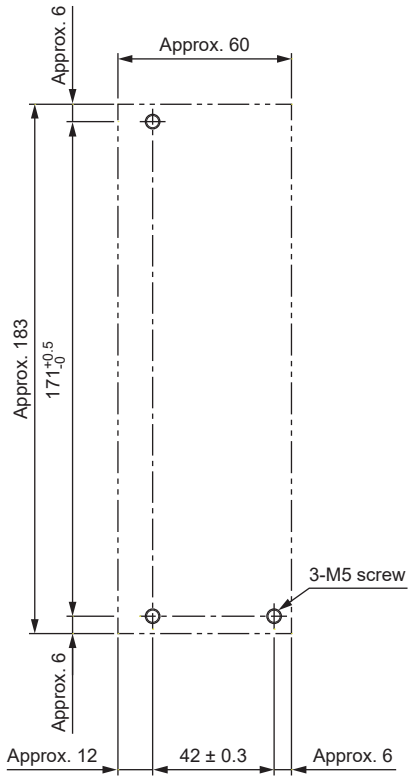

■MR-J5-200_/MR-J5-350_/MR-J5-200_4_/MR-J5-350_4_

[Unit: mm]

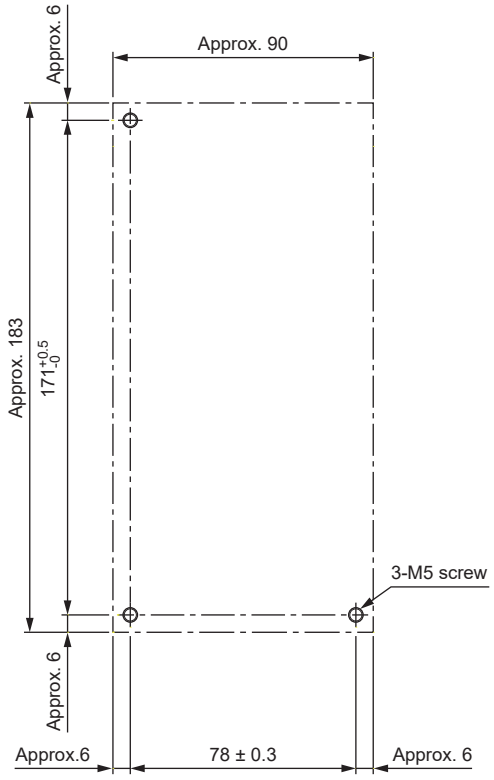

■MR-J5W2-22_/MR-J5W2-44_/MR-J5-60_4_/MR-J5-100_4_

[Unit: mm]

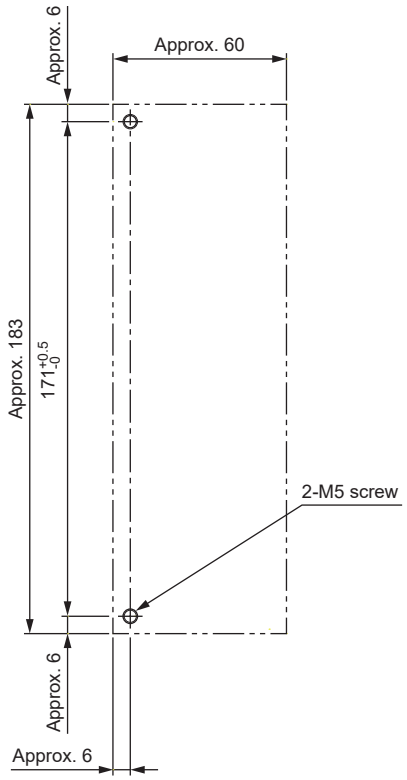

■MR-J5W2-77_/MR-J5W2-1010_

[Unit: mm]

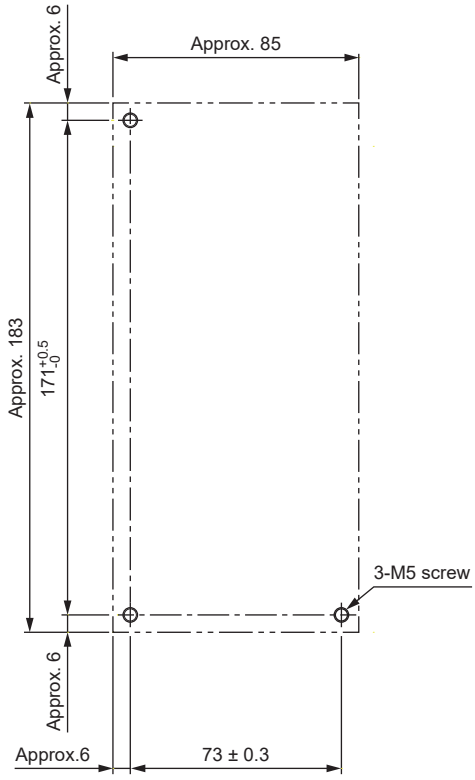

■MR-J5W3-222_/MR-J5W3-444_

[Unit: mm]

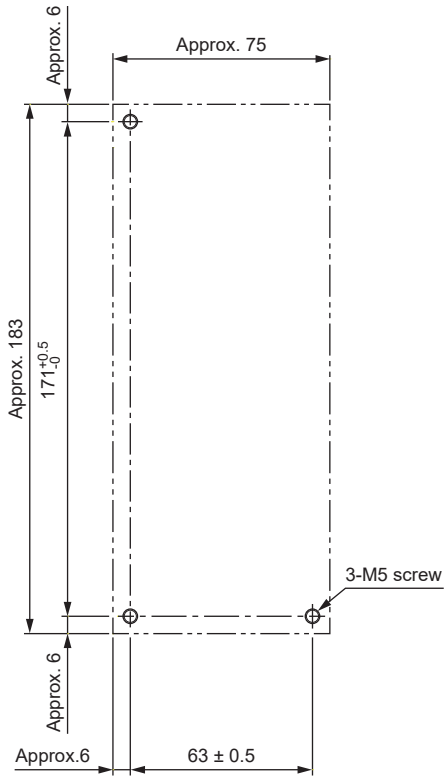

6.20 J5-CHP08 grounding terminal attachment

Using the grounding terminal attachment allows wiring of the grounding terminal on the front of the servo amplifier. It also allows the cable to be secured to the front of the servo amplifier.

Precautions

Ensure that the cable does not apply excessive stress to the attachment.

Compatible models

- MR-J5-10_ to MR-J5-350_
- MR-J5-60_4_ to 350_4_

Restrictions

- The grounding terminal attachment cannot be installed when the MR-BAT6V1SET or MR-BAT6V1SET-A batteries are used.
- Remove the cable clamp before removing the CN2L connector.

Appearance and dimensions

Appearance

- Without cable clamp

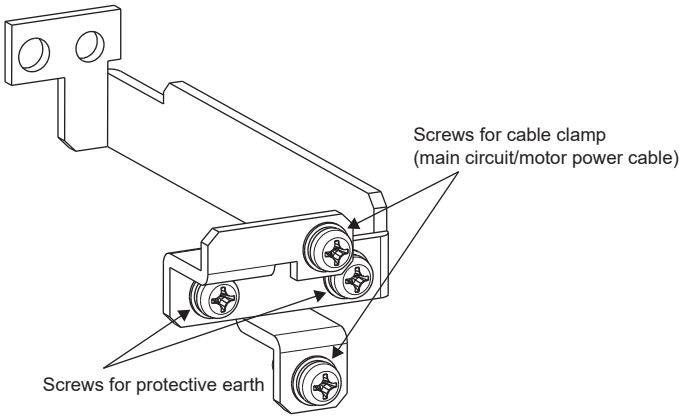

- With cable clamp

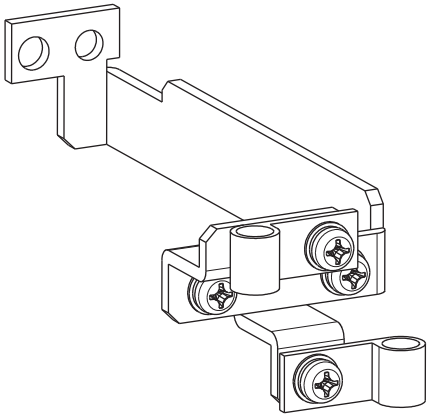

Material: SPHC-P

Plating: Trivalent chrome plated

Dimensions

[Unit: mm]

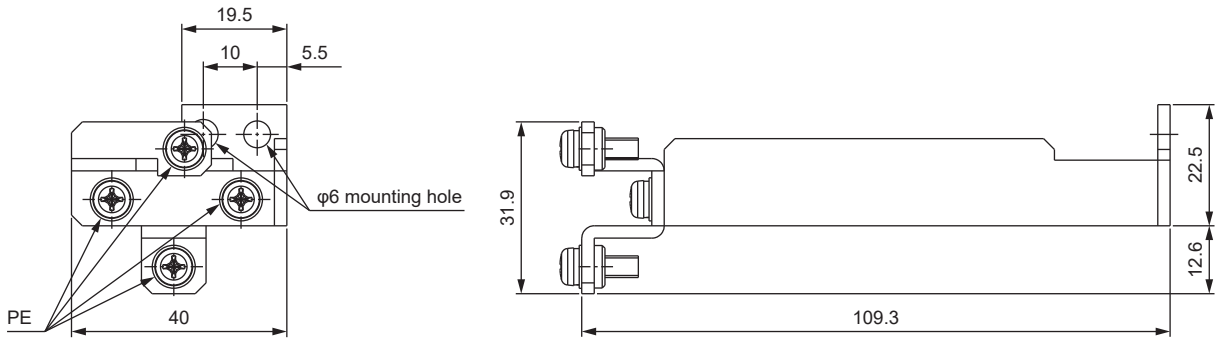

View when installed

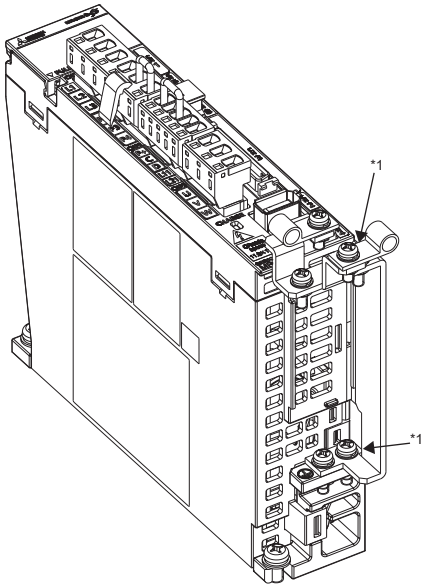

*1 The recommended screw tightening torque is 1.5 ± 0.1 N•m.

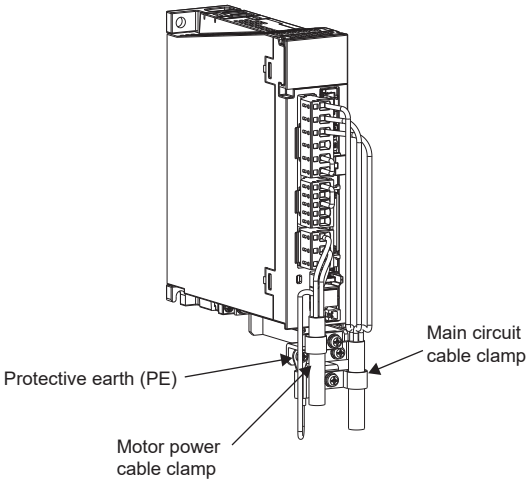

Components

Components are listed in the following table. The attachment, cable clamp, and screws do not come pre-installed.

Packed articles	Quantity
Grounding terminal attachment	1
Cable clamp (manufactured by: Takeuchi Industry ALC-7/bundle diameter φ6.5 mm to 7.5 mm)	2
Flat head screw (M4)	4

ALC series aluminum clamps (manufactured by Takeuchi Industry) can also be used. For details, contact the manufacturer.

Installation dimensions

Exterior dimensions at installation

■MR-J5-10_/MR-J5-20_/MR-J5-40_

[Unit: mm]

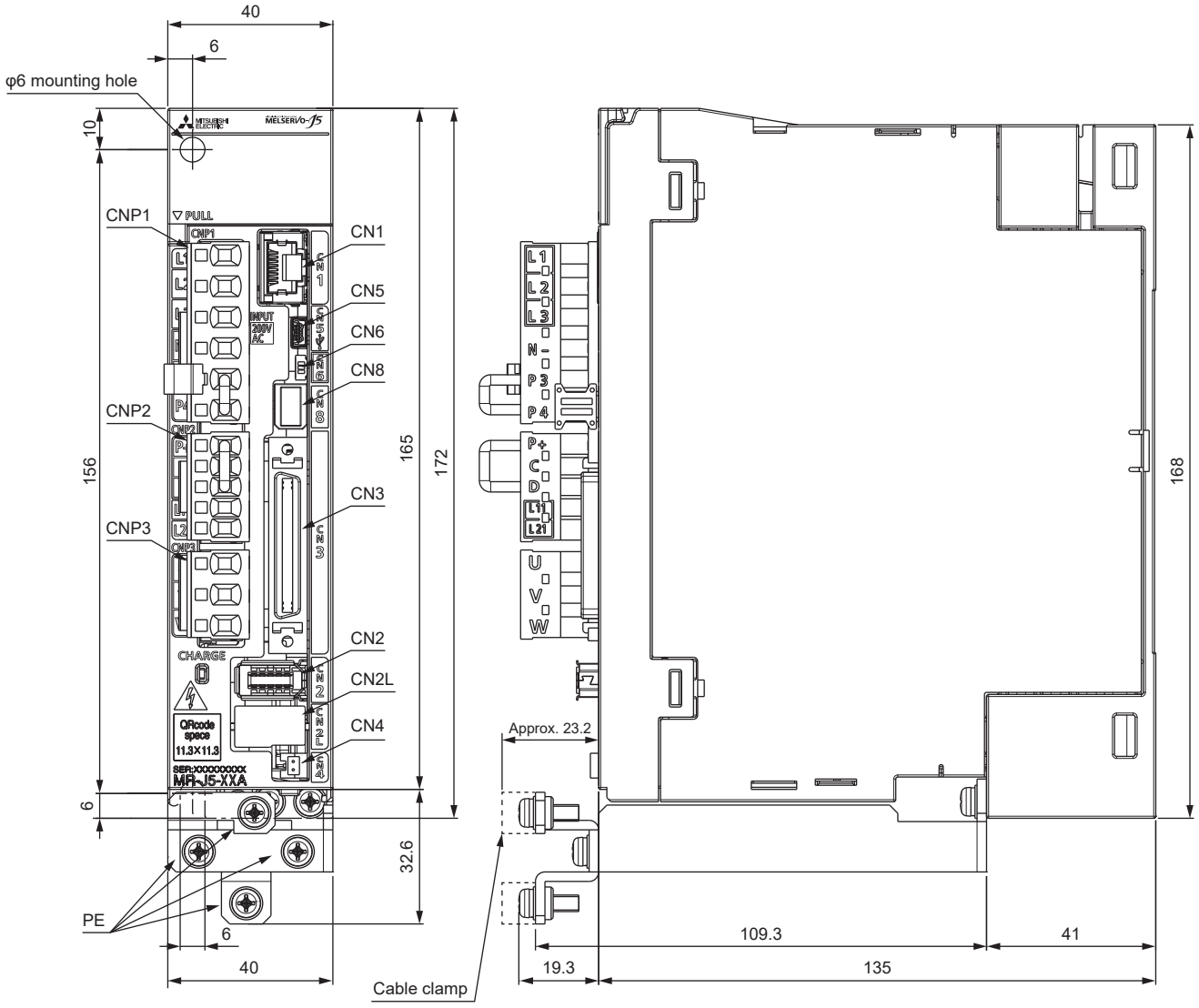

■MR-J5-60_

[Unit: mm]

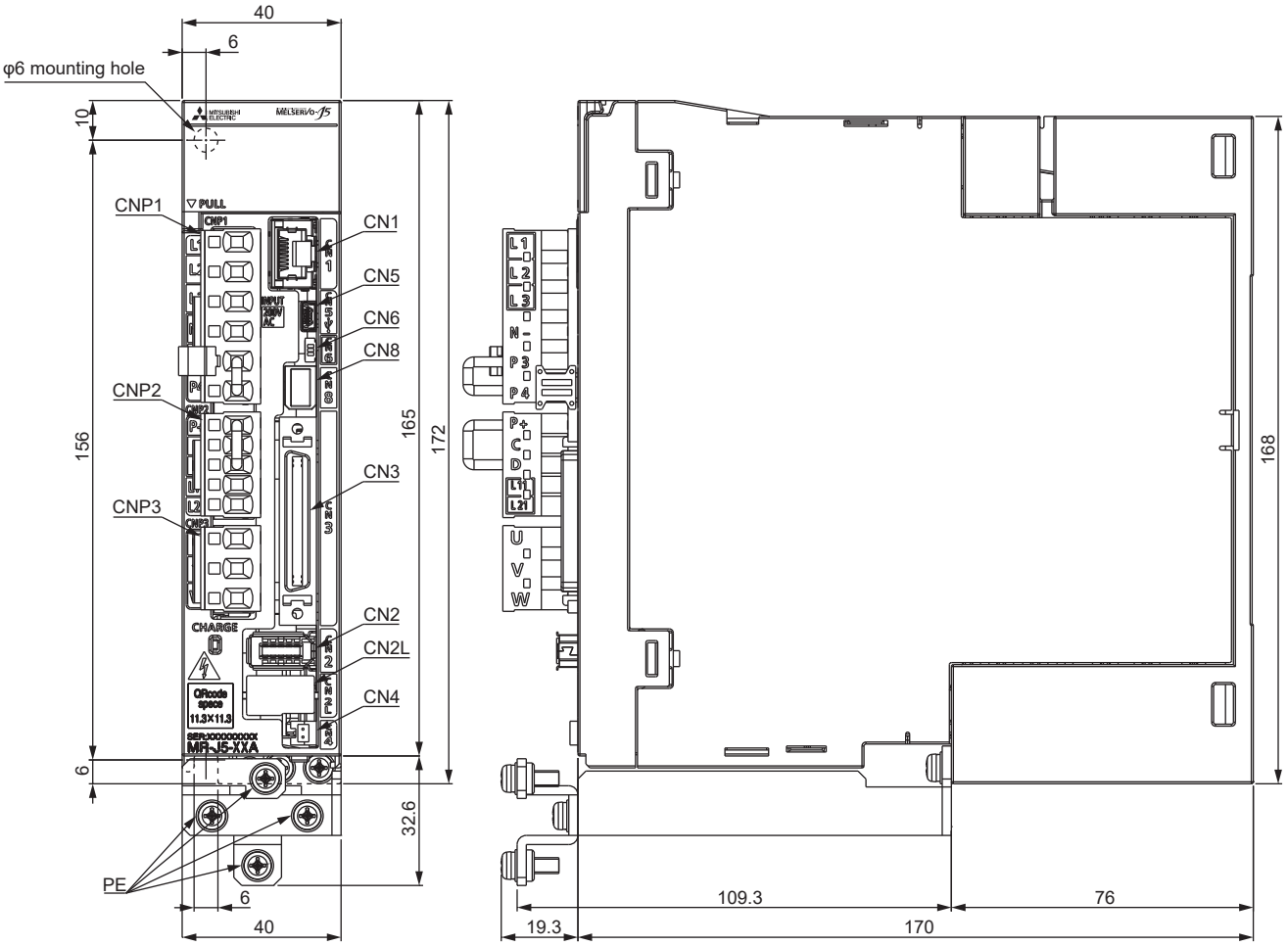

■MR-J5-70_/MR-J5-100_

[Unit: mm]

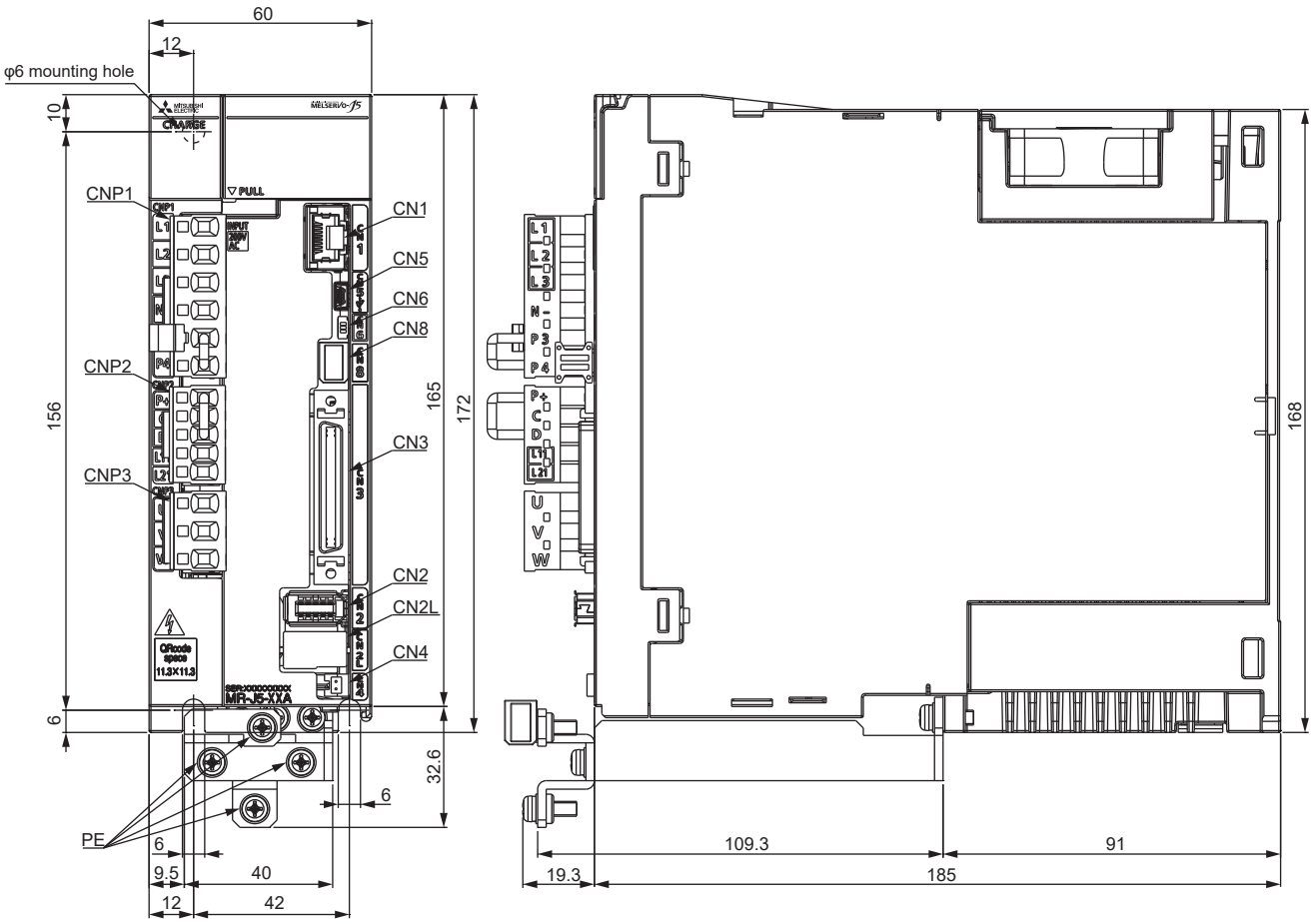

■MR-J5-200_/MR-J5-350_

[Unit: mm]

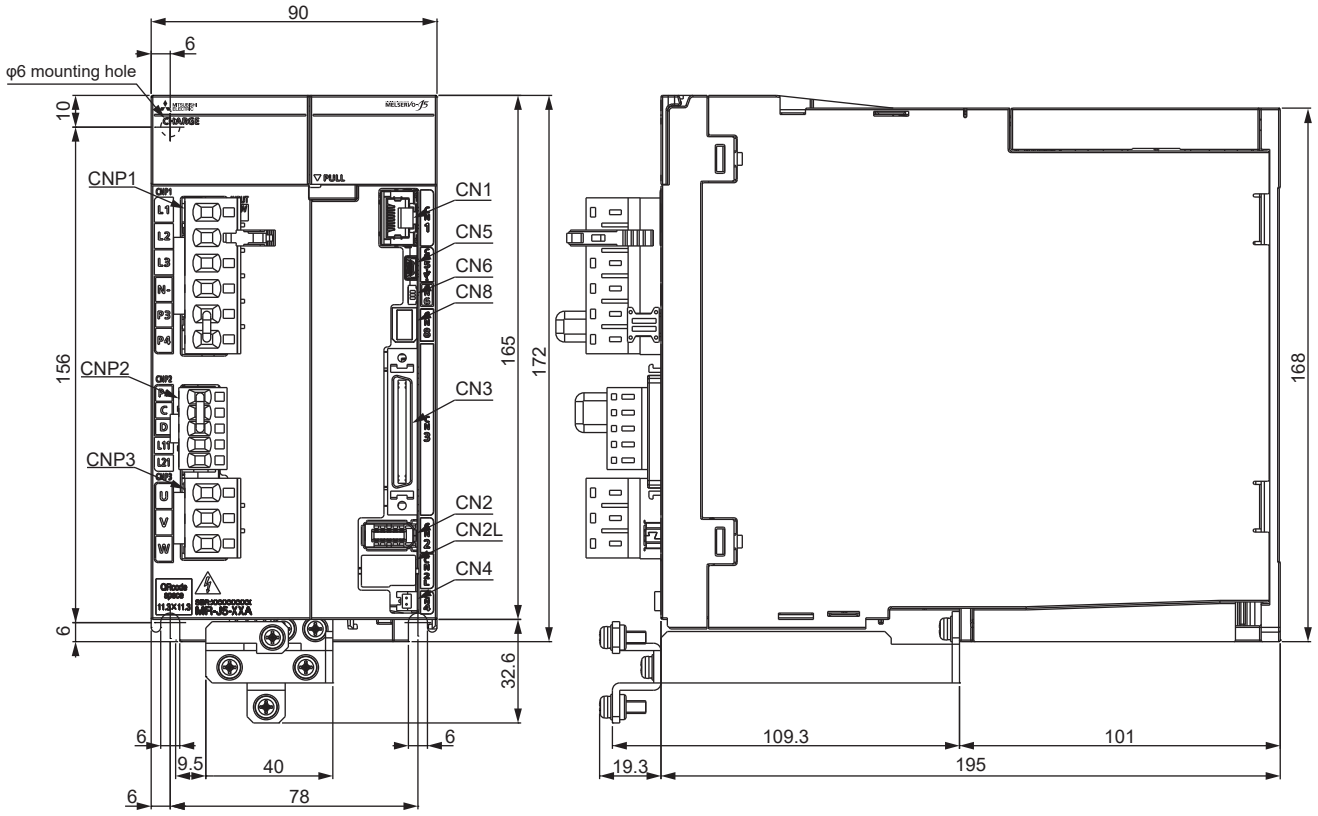

■MR-J5-60_4_/MR-J5-100_4_

[Unit: mm]

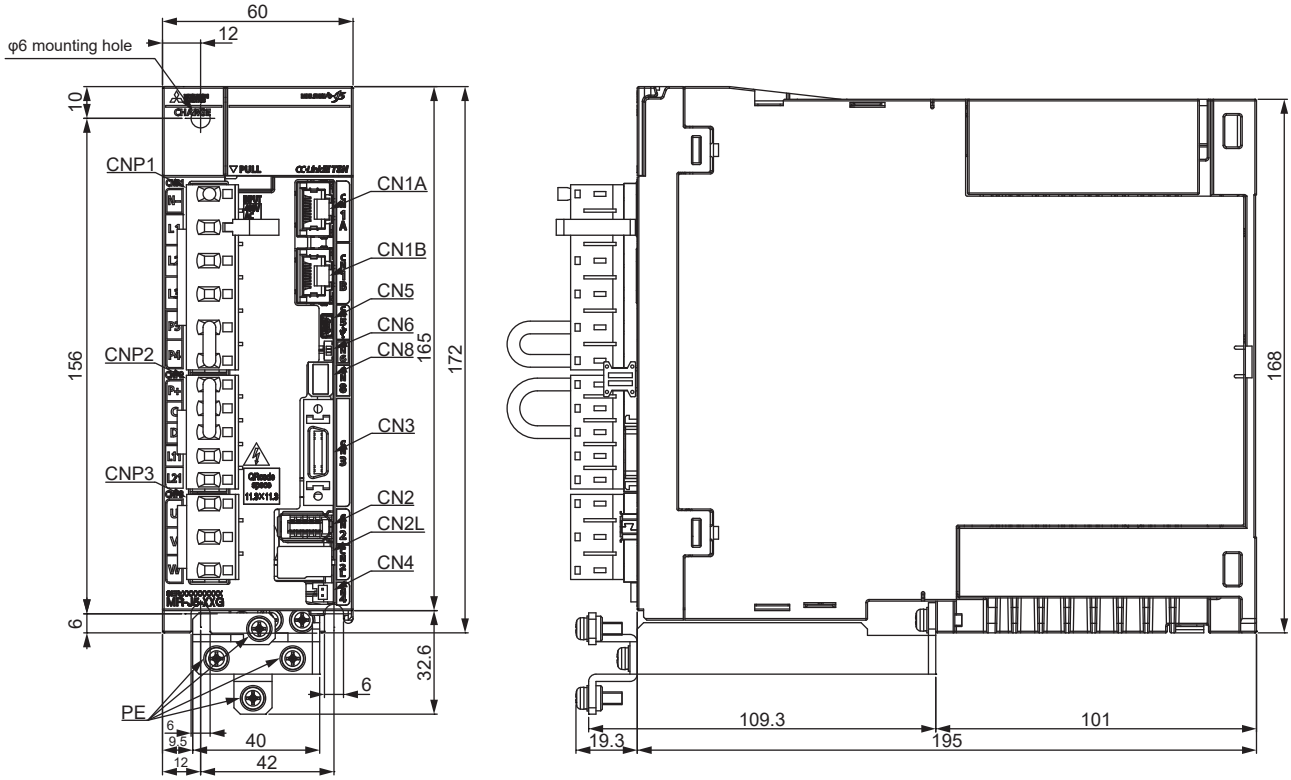

■MR-J5-200_4_/MR-J5-350_4_

[Unit: mm]

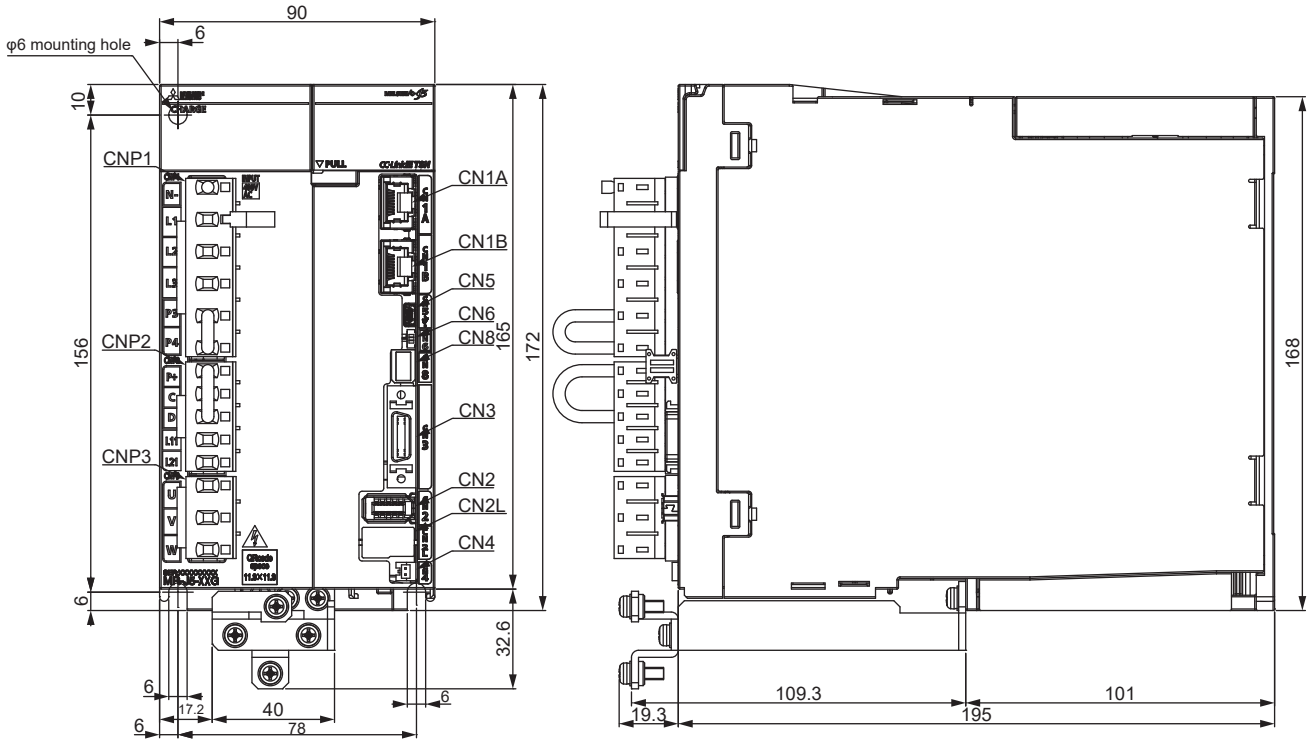

6.21 MR-ASCHP06 shield clamp attachment

This is an attachment for grounding the shield of the servo motor power cable at the bottom of the servo amplifier.

Compatible models

- MR-J5-500_4_/MR-J5-700_4_

Appearance and dimensions

Appearance

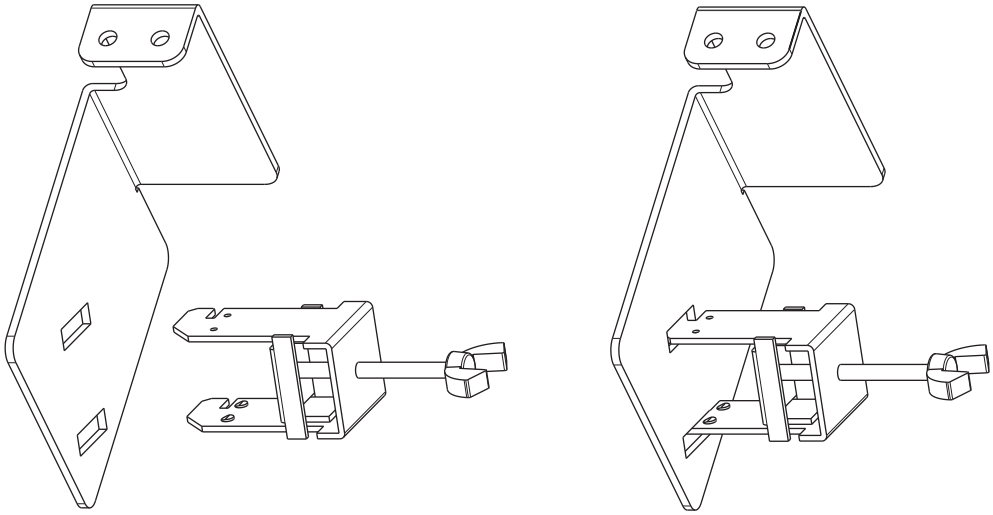

Material: SPHC-P

Plating: Trivalent chrome plated

Dimensions

[Unit: mm]

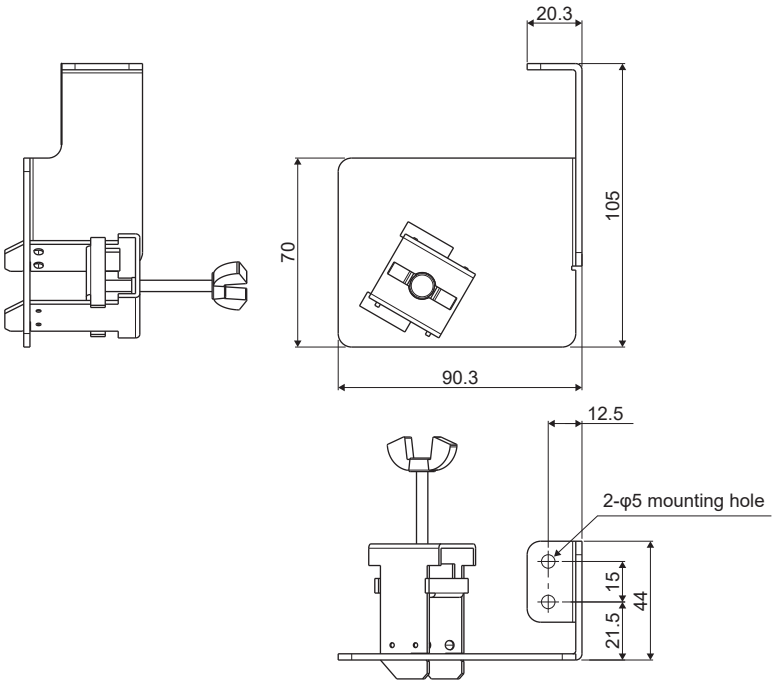

Cable connection method

Peel a part of the cable insulator to expose the external conductor as shown in the following figure, and press that part against the ground plate with the cable clamp.

The shield clamp attachment consists of the grounding plate and clamp fitting.

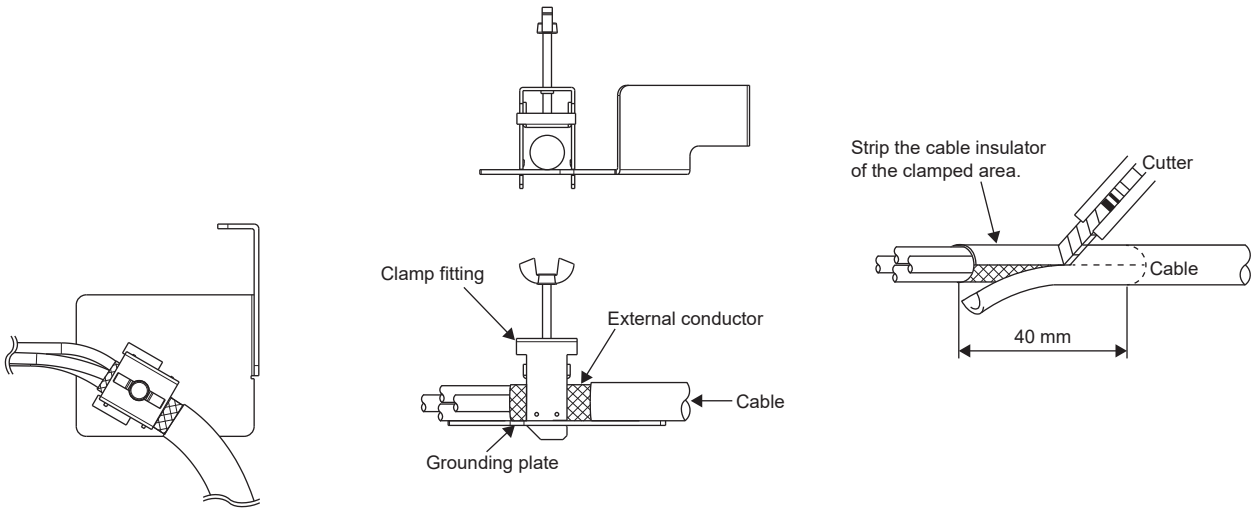

View when installed

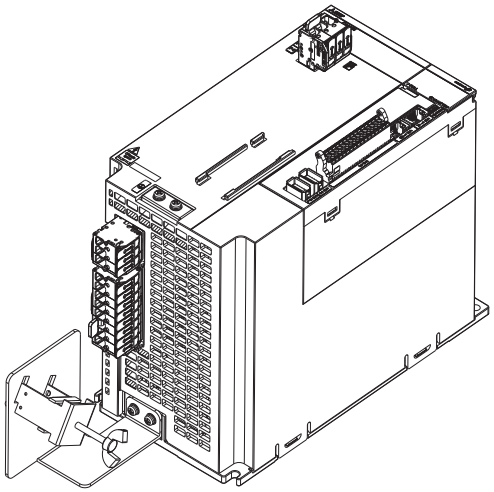

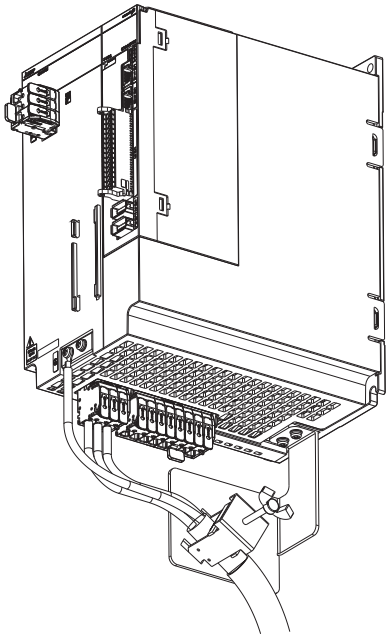

Components

Components are listed in the following table. The attachment, cable clamp, and screws come pre-installed.

Packed articles	Quantity
Shield clamp attachment	1
Cable clamp	1
Flat head screw (M4)	2

Installation dimensions

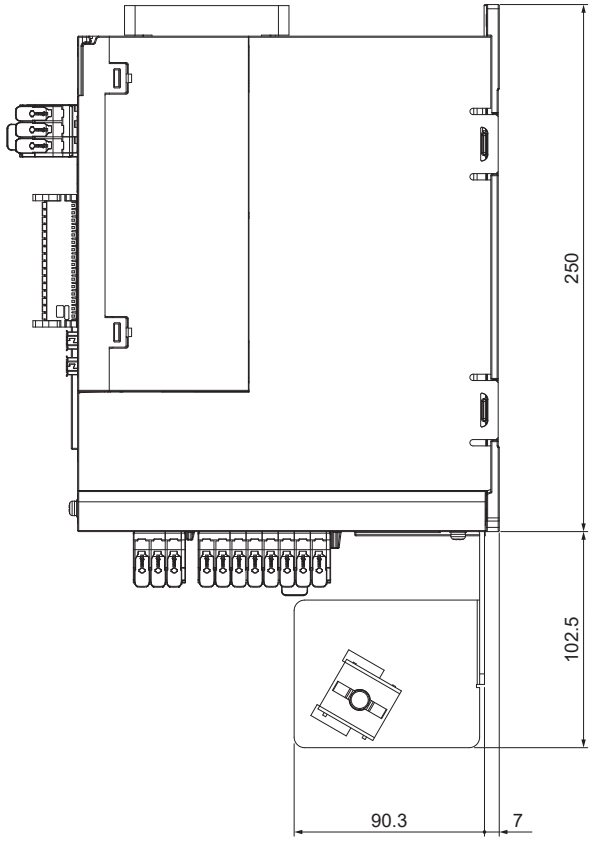

6.22 Cables manufactured by Mitsubishi Electric System & Service Co., Ltd.

SSCNET III cable [B]

Point

- For details on the SSCNET III cable, contact Mitsubishi Electric System & Service Co., Ltd.
- Do not look directly at the light emitted from the CN1A and CN1B connectors of the servo amplifier or the end of the SSCNET III cable. The light may cause discomfort when it enters your eyes.

The cable length is from 1 m to 100 m in increments of 1 m. "_" in the cable model indicates the cable length (1 to 100).

Cable model	Flex type	Application/remark
SC-J4BUS_M-A	Standard (for fixed parts)	For standard cables outside cabinet
SC-J3BUS_M-C	Ultra-high flex life (for moving parts)	For long distance cables

6.23 SCC 15-F Shield connection clamp

This component is a terminal block for grounding the shield of the servo motor power cable on the top of the servo amplifier.

Point

For details of the component, contact Phoenix Contact.
To install the component, two screws of M4 × 6 to 12 are required.

Compatible models

- MR-J5-500_4_/MR-J5-700_4_

Applicable wire diameter

- 8 mm to 15 mm

Cable connection method

Peel a part of the cable insulator to expose the external conductor as shown in the following figure, and secure that part by putting it into the shield connection clamp.

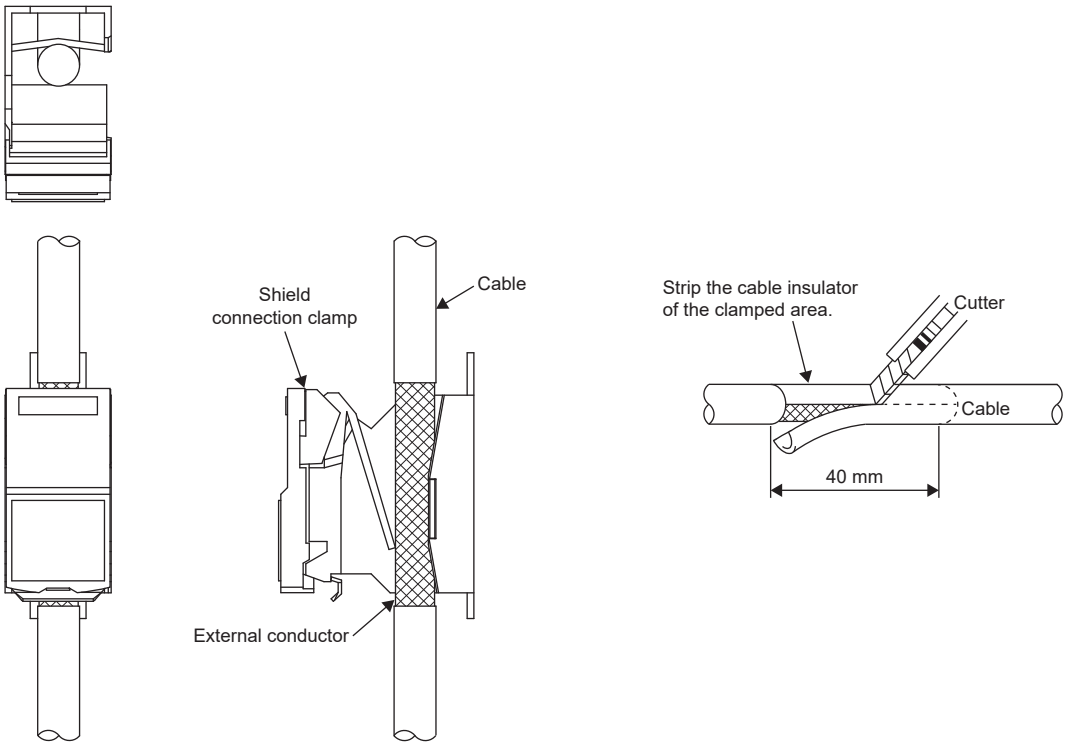

View when installed

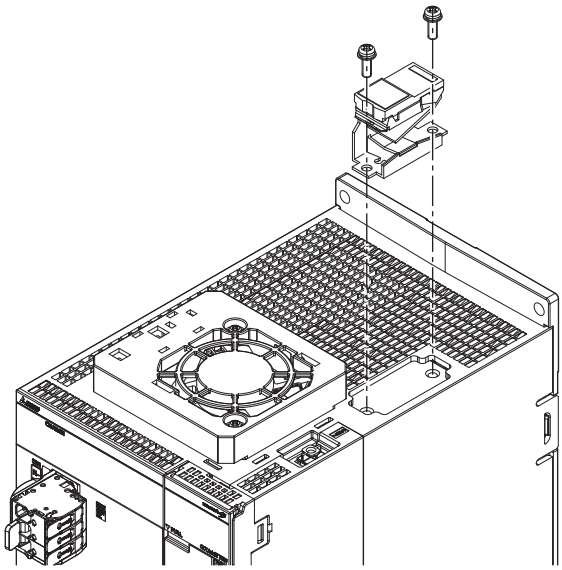

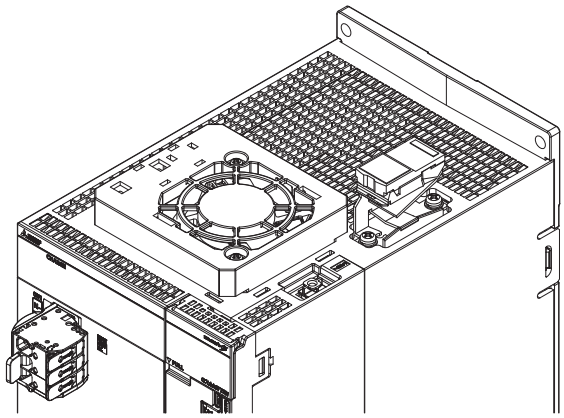

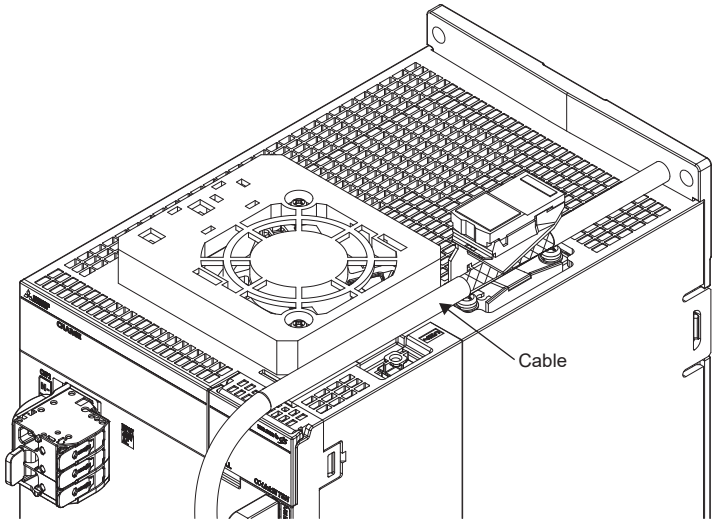

7 ABSOLUTE POSITION DETECTION SYSTEM

Precautions

- If [AL. 025 Absolute position erased] or [AL. 0E3 Absolute position counter warning] occurs, execute homing again.
- For the replacement procedure of the battery, refer to the following.

☞ Page 311 Battery

- When the servo motor that requires a battery for the absolute position detection system is used, disconnection of the encoder cable or replacement of the battery while the control circuit power supply is off causes the encoder to erase the absolute position data. If the absolute position data is erased, execute home position setting before operation.
- When the battery is used out of specification, the absolute position data may be erased.

7.1 Outline

Characteristics

The encoder consists of a circuit designed to detect a position within one revolution and the number of revolutions.
The absolute position detection system always detects and memorize the absolute position of the machine, regardless of whether the controller power is on/off. Therefore, once homing is performed at the time of machine installation, homing is not needed when power is switched on thereafter.
Even if a power failure or a malfunction occurs, the system can be easily restored.

Restrictions [G]

The absolute position detection system cannot be configured in the following conditions.

- When an incremental type encoder is being used
- When semi closed/fully closed switching is enabled
- Stroke-less coordinate system (except degree unit setting) for infinite positioning and the like in combination with a controller other than a Mitsubishi Electric controller

Restrictions [B]

The absolute position detection system cannot be configured in the following conditions.

- When an incremental type encoder is being used
- When semi closed/fully closed switching is enabled
- When a controller that does not support the infinite feed function is used in a stroke-less coordinate system such as a degree axis

Restrictions [A]

The absolute position detection system cannot be configured in the following conditions.

- When an incremental type encoder is being used
- Speed control mode and torque control mode
- Infinite long positioning and the like, stroke-less coordinate system
- Changing electronic gear after homing

The absolute position detection system by DIO cannot be configured in the following conditions.

- Control switching mode (position/speed, speed/torque, and torque/position)

The test operation cannot be performed in the absolute position detection system by DIO. To perform the test operation, select the incremental system in [Pr. PA03].

Precautions [G] [A]

Even when using a servo motor with battery-less absolute position encoder, absolute position data is erased under the following conditions. If the absolute position data is erased, perform homing again.

- The servo motor or servo amplifier is replaced.
- The incremental system is enabled.
- [Pr. PA01 Operation mode selection] is changed.
- [AL. 025 Absolute position erased] occurs.
- [AL. 0E3 Absolute position counter warning] occurs.
- [AL. 02B Encoder counter error] occurs.

Connecting a servo motor other than the one with a batteryless absolute position encoder that was connected at the startup of the absolute position detection system triggers [AL. 01A Servo motor combination error]. In such cases, reconnect the servo motor that was connected at the startup of the absolute position detection system to operate without losing the absolute position data. When replacing a servo motor, refer to the following.

☞ Page 417 Procedure of replacing a servo motor with battery-less absolute position encoder

When [Pr. PF63.0 [AL. 01A.5 Servo motor combination error 3] selection] is "1" (disabled), connecting a servo motor that had not been connected at the startup of the absolute position detection system will cause [AL. 025 Absolute position erased], erasing absolute position data.

Therefore, check if a correct servo motor is connected.

Precautions [B]

Even when using a servo motor with battery-less absolute position encoder, absolute position data is erased under the following conditions. If the absolute position data is erased, the homing request signal turns on on the controller side. Perform homing again.

- The servo motor or servo amplifier is replaced.
- [AL. 025 Absolute position erased] occurs.
- [AL. 0E3 Absolute position counter warning] occurs.
- [AL. 02B Encoder counter error] occurs.
- The servo amplifier with the absolute position data is used as a slave axis of the master-slave operation function.

For the conditions for the homing request signal to be turned on due to controller factors, refer to each controller manual.

Connecting a servo motor other than the one with a batteryless absolute position encoder that was connected at the startup of the absolute position detection system triggers [AL. 01A Servo motor combination error]. In such cases, reconnect the servo motor that was connected at the startup of the absolute position detection system to operate without losing the absolute position data. When replacing a servo motor, refer to the following.

☞ Page 417 Procedure of replacing a servo motor with battery-less absolute position encoder

When [Pr. PF63.0 [AL. 01A.5 Servo motor combination error 3] selection] is "1" (disabled), connecting a servo motor that had not been connected at the startup of the absolute position detection system will cause [AL. 025 Absolute position erased], erasing absolute position data.

Therefore, check if a correct servo motor is connected.

Configuration

The following shows the configuration of the absolute position detection system.

When connecting the battery-less absolute position encoder

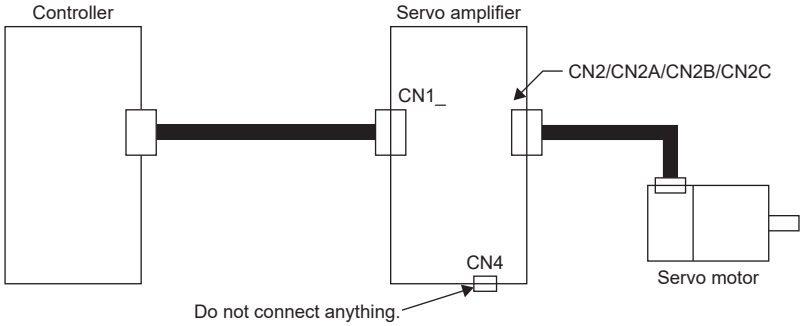

When connecting the battery backup type absolute position encoder

For each battery connection, refer to the following.

☞ Page 311 Battery

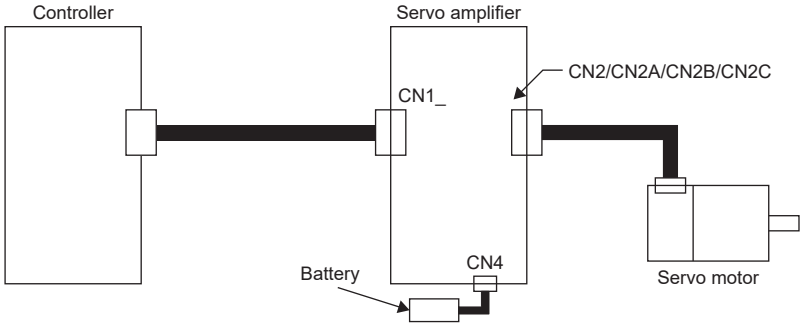

Servo parameter setting [G]

Set [Pr. PA03.0 Absolute position detection system selection] to "1" (enabled (absolute position detection system)).
When an absolute position detection system is configured in the cyclic synchronous mode with a Motion module manufactured by Mitsubishi Electric, set [Pr. PC29.5 [AL. 0E3 Absolute position counter warning] selection] to "0" (disabled).

Servo parameter setting [B]

Set [Pr. PA03.0 Absolute position detection system selection] to "1" (enabled (absolute position detection system)).

Servo parameter setting [A]

Set [Pr. PA03.0 Absolute position detection system selection] to "1" (enabled (absolute position detection system by DIO)).

Homing [G] [A]

After the absolute position detection system is enabled, [AL. 025 Absolute position erased] occurs at the initial startup. Then, ABSV (Absolute position erased) turns on. Refer to "CONTROL MODE" in the following manual and perform homing.
MR-J5 User's Manual (Function)

Homing [B]

After the absolute position detection system is enabled, [AL. 025 Absolute position erased] occurs at the initial startup. Then, ABSV (Absolute position erased) turns on. For the homing method, refer to each controller manual.

Checking the detected absolute position data

Absolute position data can be checked with MR Configurator2.
Choose "Monitor" and "ABS Data Display" to open the absolute position data display screen.

ABS data display [G] [A]

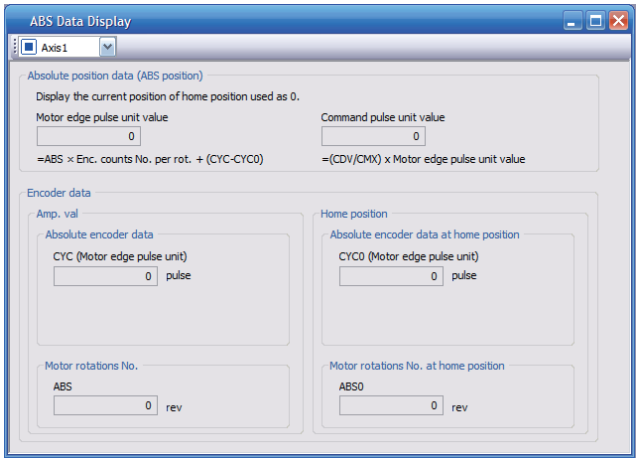

No.	Item		Screen operation
	MR Configurator2	Configuration diagram *1	
(1)	Motor (machine) side pulse unit value	—	Acquires the value in the unit of the servo motor (machine) side pulses from the servo amplifier of the specified axis and displays it.
(2)	Command pulse unit value	Current position	Acquires the command pulse unit value from the servo amplifier for the specified axis and displays it.
(3)	CYC	1X	[G]: Acquires the position within one revolution in the unit of the servo motor (machine) side pulses from the servo amplifier of the specified axis and displays it. [A]: Acquires the command pulse data of the position within one-revolution from the servo amplifier of the specified axis and displays it.
(4)	ABS	LS	Acquires the multi-revolution counter travel distance from the absolute home position from the servo amplifier of the specified axis and displays it.
(5)	CYC0	1XO	[G]: Acquires the home position within one revolution in the unit of the servo motor (machine) side pulses from the servo amplifier of the specified axis and displays it. [A]: Acquires the command pulse data of the home position within one-revolution from the servo amplifier of the specified axis and displays it.
(6)	ABS0	LSO	Acquires the multi-revolution counter value of the absolute home position from the servo amplifier of the specified axis and displays it.

*1 Refer to the following for the configuration diagram.
☞ Page 419 Connecting the battery-less encoder

ABS data display [B]

No.	Item		Screen operation
	MR Configurator2	Configuration diagram *1	
(1)	Motor (machine) side pulse unit value	—	Acquires the value in the unit of the servo motor (machine) side pulses from the servo amplifier of the specified axis and displays it.
(2)	Command pulse unit value	Current position	Acquires the command pulse unit value from the servo amplifier for the specified axis and displays it.
(3)	CYC	1X	[B]: Acquires the position within one revolution in the unit of the servo motor (machine) side pulses from the servo amplifier of the specified axis and displays it.
(4)	ABS	LS	Acquires the multi-revolution counter travel distance from the absolute home position from the servo amplifier of the specified axis and displays it.
(5)	CYC0	1XO	[B]: Acquires the home position within one revolution in the unit of the servo motor (machine) side pulses from the servo amplifier of the specified axis and displays it.
(6)	ABS0	LSO	Acquires the multi-revolution counter value of the absolute home position from the servo amplifier of the specified axis and displays it.

*1 Refer to the following for the configuration diagram.
☞ Page 419 Connecting the battery-less encoder

Procedure of replacing a servo motor with battery-less absolute position encoder

To replace a servo motor with battery-less absolute position encoder, use the following procedure.

Servo motor replacement procedure

Point

For servo amplifiers with firmware version D8 or later, step 3 is not required.

1. Replacing the servo motor

Turn off the power supply of the servo amplifier and replace the servo motor.

2. Canceling [AL. 01A Servo motor combination error]

When the power supply of the servo amplifier is turned on, [AL. 01A.5 Servo motor combination error 3] occurs.
After setting [Pr. PA03.1 Servo motor replacement preparation] to "1" (enabled), cycle the power of the servo amplifier or perform the software reset and then deactivate [AL. 01A.5].

3. Cycling the power

After checking that [AL. 01A.5] does not occur, cycle the power of the servo amplifier or perform the software reset.

4. Homing

The absolute position data is erased by servo motor replacement. Before starting operation, perform homing.

Procedure of replacing the servo motor without changing the servo parameter setting

By setting [Pr. PF63.0 [AL. 01A.5 Servo motor combination error 3] selection] to "1" (disabled) while the absolute position detection system is enabled, an in-use servo motor with a batteryless absolute position encoder can be replaced without changing the setting value of [Pr. PA03.1 Servo motor replacement preparation].
Connecting a servo motor that had not been connected at the startup of the absolute position detection system will cause [AL. 025 Absolute position erased], erasing absolute position data.
Therefore, check if a correct servo motor is connected.
To replace the servo motor without changing the servo parameter setting, refer to the following procedure. Set [Pr. PF63.0] to "1" (disabled) in advance, and reset the controller or cycle the power.

1. Replacing the servo motor

Turn off the power supply of the servo amplifier and replace the servo motor.

2. Canceling [AL. 025 Absolute position erased]

When the power supply of the servo amplifier is turned on, [AL. 025.1 Servo motor encoder absolute position erased] occurs.
Cycle the power of the servo amplifier to deactivate [AL. 025.1].

3. Homing

When [AL. 025] occurs, the absolute position data is erased. Before starting operation, perform homing.

Procedure of replacing a servo amplifier without losing the absolute position data [B]

Point

When using existing parameter settings for a servo amplifier with factory settings, check that the settings of [Pr. PC84 Servo amplifier replacement data 1] to [Pr. PC91 Servo amplifier replacement data 8] are "0" before connecting the servo amplifier to the controller. Otherwise, [AL. 01A.5 Servo motor combination error 3] may occur. When [AL. 01A.5] occurs, after changing the setting value of [Pr. PA03.1 Servo motor replacement preparation] to "1" (enabled), cycle the power and then deactivate [AL. 01A Servo motor combination error]. Perform homing again. After connecting the servo amplifier to the controller, servo parameters will be set automatically.

To replace a servo amplifier that uses a servo motor with batteryless absolute position encoder as the absolute position detection system due to a servo amplifier malfunction, use the following procedure.

1. Setting the parameter

After the communication between the controller and the servo amplifier is established, set [Pr. PF63.2 Servo amplifier replacement data save selection] to "1" (enabled). After setting, cycle the power, or reset either the controller or the software to reflect the setting.

2. Checking the setting values of the controller

After the communication between the controller and the servo amplifier is established, check that the value is reflected to the following parameters with the controller. Applicable parameters depend on the control mode.

- Semi closed loop control mode: [Pr. PC84 Servo amplifier replacement data 1] to [Pr. PC87 Servo amplifier replacement data 4]
- Fully closed loop control mode: [Pr. PC88 Servo amplifier replacement data 5] to [Pr. PC91 Servo amplifier replacement data 8]

In the fully closed loop operation mode, values may be input to [Pr. PC84] to [Pr. PC87].

3. Replacing the servo amplifier

Power off the servo amplifier before replacing it. The absolute position will not be erased. This enables positioning operation without performing homing again.

7.2 Configuration and specifications

Connecting the battery-less encoder

The following shows an example of battery-less encoder connection.

Configuration diagram [G] [A]

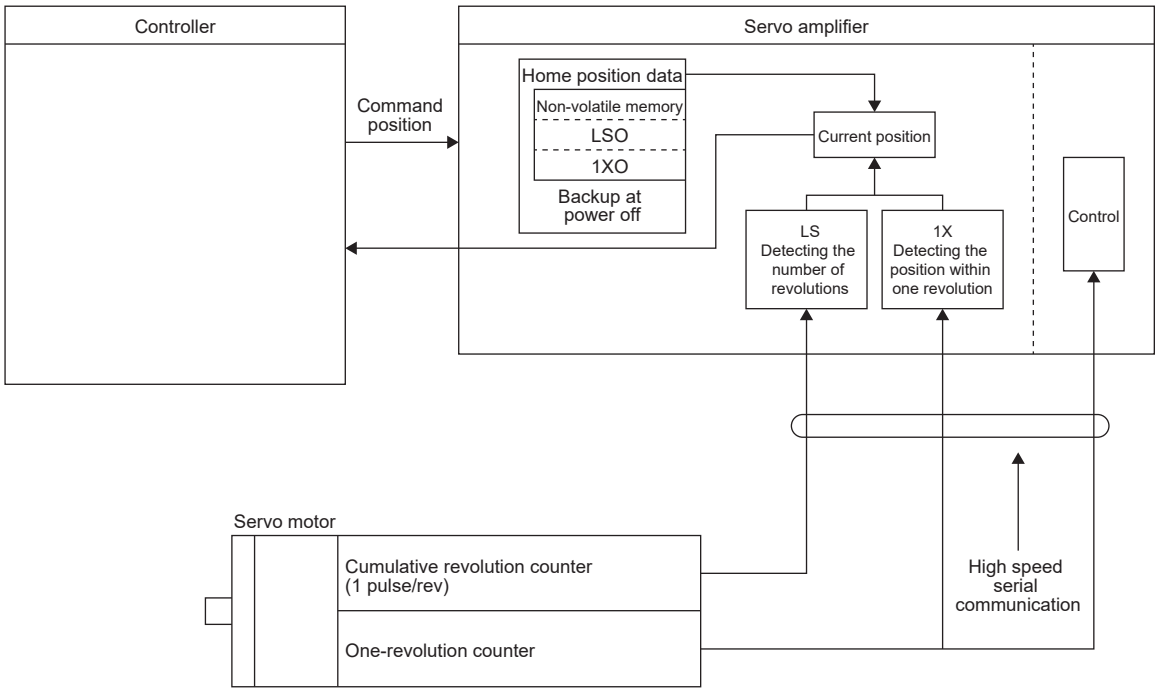

Configuration diagram [B]

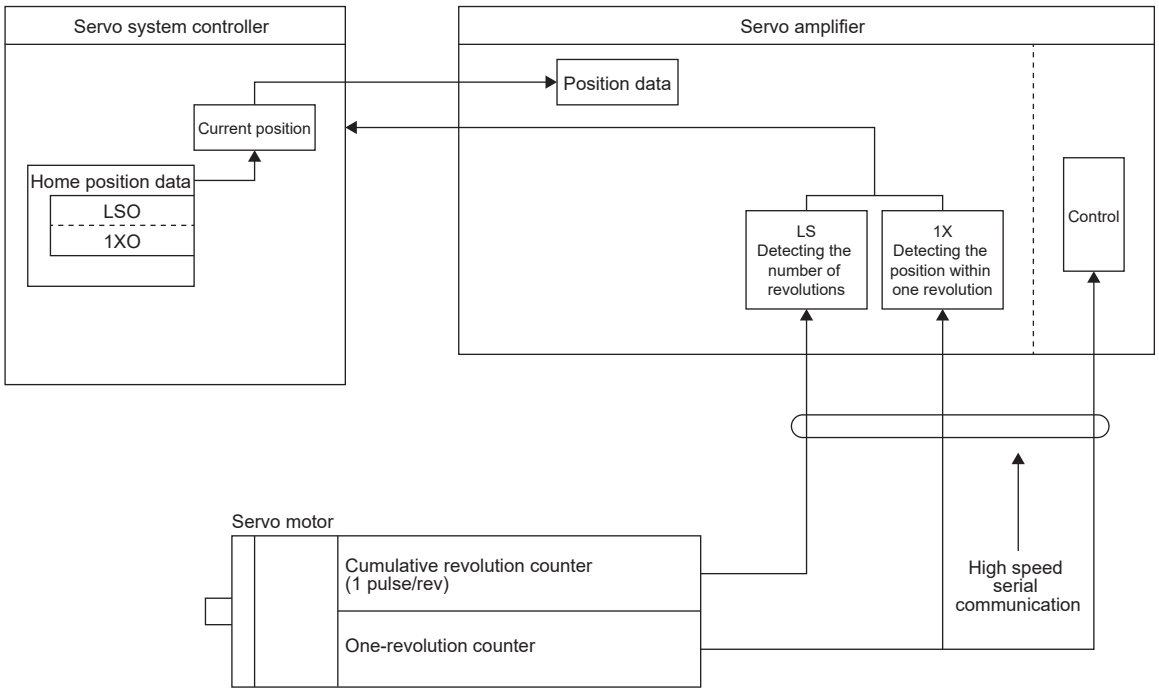

Specification list

Item		Description
System		Electronic, battery backup type
Maximum revolution range		Home position ± 32767 rev
Maximum speed at power failure [r/min] *1	Rotary servo motor manufactured by Mitsubishi Electric	8000 (only when the acceleration/deceleration time until 8000 r/min is 0.2 s or longer)

*1 Maximum speed available when the shaft is rotated by external force at the time of power failure. Also, if power is switched on when the servo motor is rotated by an external force at a speed of 3000 r/min or higher, position mismatch may occur.

Connecting the battery backup type absolute position encoder

The following shows an example of battery backup type absolute position encoder connection.

Using the MR-BAT6V1SET/MR-BAT6V1SET-A battery

■Configuration diagram [G] [A]

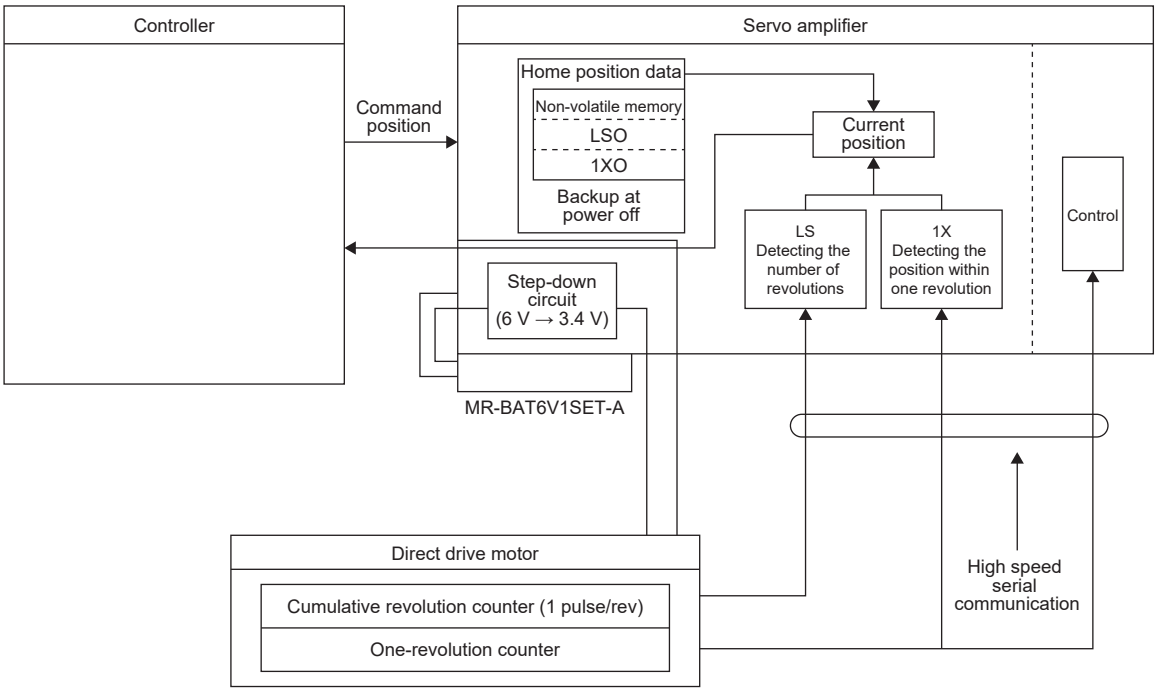

■Configuration diagram [B]

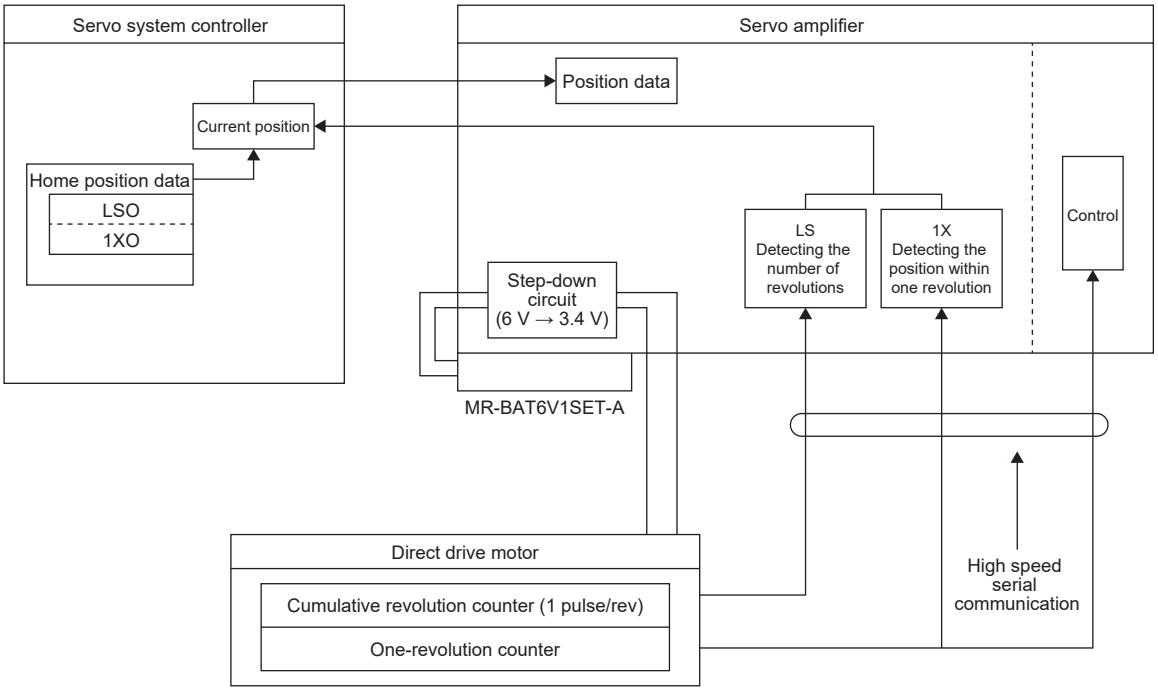

■Specification list

Item		Description
System		Electronic, battery backup type
Maximum revolution range		Home position ± 32767 rev
Maximum speed at power failure [r/min] *1	Direct drive motor manufactured by Mitsubishi Electric	500 (only when the acceleration/deceleration time until 500 r/min is 0.1 s or longer)
Battery backup time *2	Direct drive motor manufactured by Mitsubishi Electric	Approximately 5000 hours (when the equipment power is off, and the ambient temperature is 20 ˚C) Approximately 15000 hours (when the power-on ratio is 25 %, and the ambient temperature is 20 ˚C) *3

*1 Maximum speed available when the shaft is rotated by external force at the time of power failure.

*2 The data-retention time with the MR-BAT6V1SET-A. Replace the batteries within three years since the operation start regardless of the power supply of the servo amplifier on/off. If the battery is used outside of specification range, [AL. 025 Absolute position erased] may occur.

*3 Power-on ratio of 25 % is the equivalent to power-on for 8 hours on weekdays and power-off on weekends.

Using the MR-BT6VCASE battery case

One MR-BBT6VCASE can hold the absolute position data of up to 8-axis servo motors.
Install five MR-BAT6V1 batteries to MR-BT6VCASE.

■Configuration diagram [G] [A]

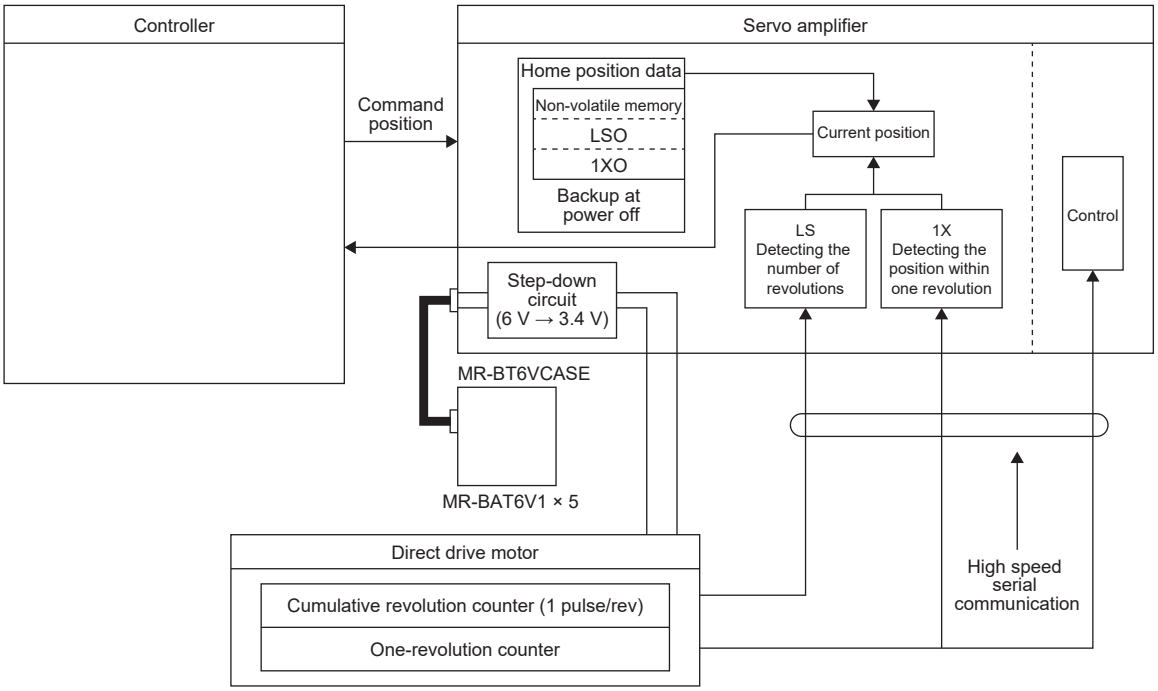

■Configuration diagram [B]

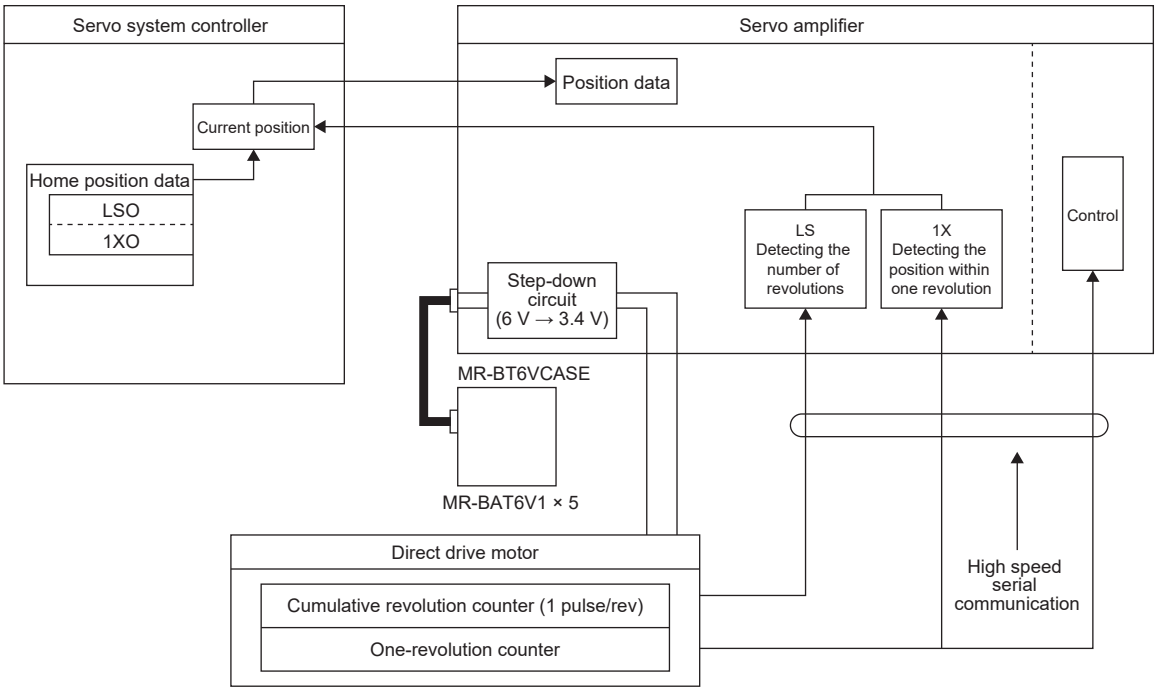

■Specification list

Item		Description
System		Electronic, battery backup type
Maximum revolution range		Home position ± 32767 rev
Maximum speed at power failure [r/min] *1	Direct drive motor manufactured by Mitsubishi Electric	500 (only when the acceleration/deceleration time until 500 r/min is 0.1 s or longer)
Battery backup time *2	Direct drive motor manufactured by Mitsubishi Electric	Approximately 10000 hours/2 axes or less, 7000 hours/3 axes, or 5000 hours/4 axes (when the equipment power is off, and the ambient temperature is 20 ˚C) Approximately 15000 hours/2 axes or less, 13000 hours/3 axes, or 10000 hours/4 axes (When the power-on ratio: 25 %, and the ambient temperature is 20 ˚C) *3

*1 Maximum speed available when the shaft is rotated by external force at the time of power failure.

*2 The data-retention time with five MR-BAT6V1. The battery life varies depending on the number of target axes (including axis for using in the incremental system). Replace the batteries within three years since the operation start regardless of the power supply of the servo amplifier on/off. If the battery is used outside of specification range, [AL. 025 Absolute position erased] may occur.

*3 Power-on ratio of 25 % is the equivalent to power-on for 8 hours on weekdays and power-off on weekends.

7.3 Absolute position detection system by DIO [A]

The absolute position detection system by DIO establishes the absolute position between the controller and servo amplifier, by transferring the absolute position information from the servo amplifier to the controller using the DIO signal.

Standard connection example

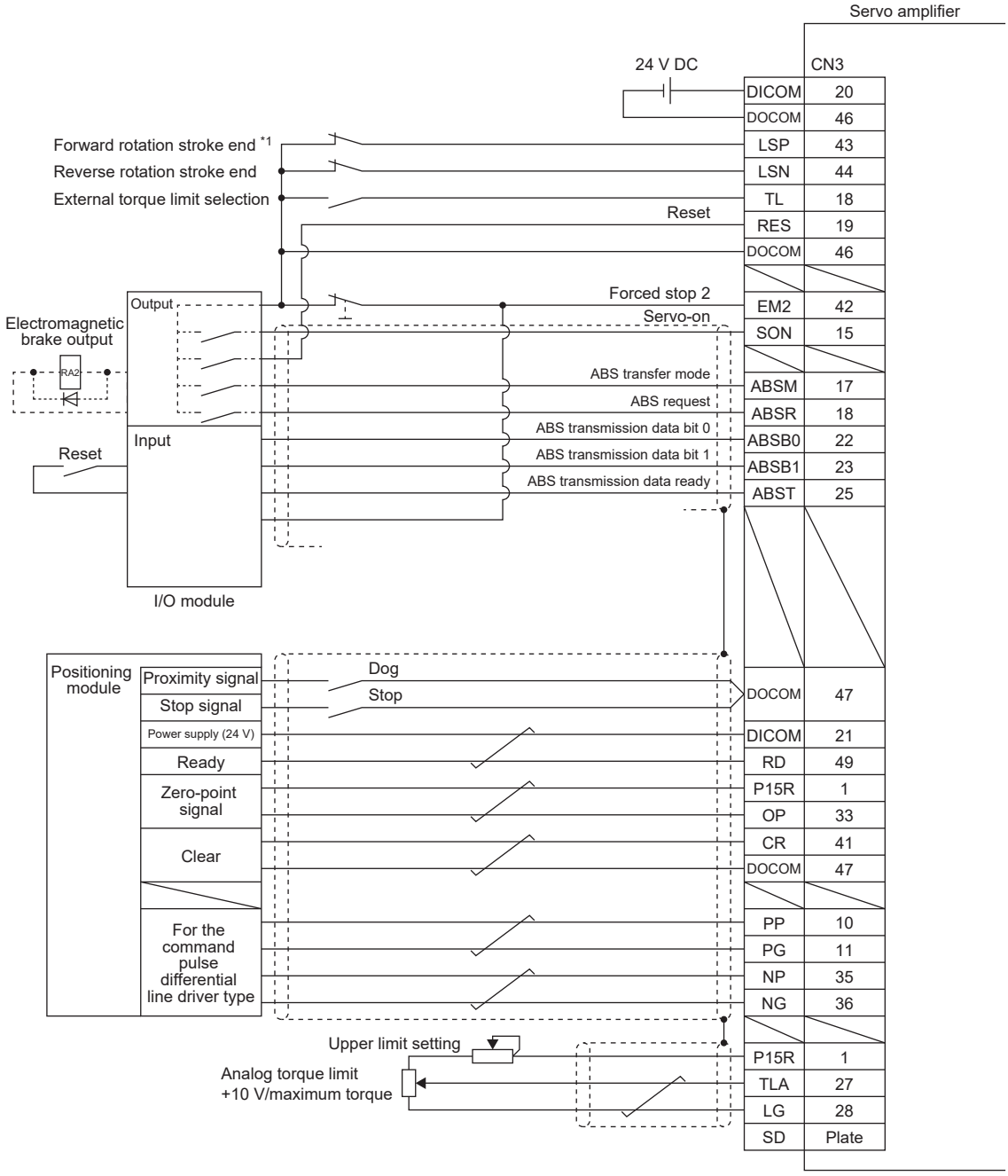

*1 During operation, always turn on LSP and LSN.

Signal explanation

When the absolute value data is transferred, the signals of connector CN3 change as follows. On completion of data transfer, the signal returns to the previous status.
Other signals do not change.

Signal name	Symbol	CN3 connector pin No.	Function and application	I/O signal interface type	Control mode
ABS transfer mode	ABSM	17 *1	While ABSM is on, the servo amplifier is in the ABS transfer mode, and the functions of CN3-22, CN3-23, and CN3-25 pins change as indicated in this table.	DI-1	P (Position control)
ABS request	ABSR	18 *1	Turn on ABSR to request the absolute position data during ABS transfer mode.	DI-1	
ABS transmission data bit 0	ABSB0	22	Indicates the lower bit of the absolute position data (2 bits) which is sent from the servo to the programmable controller in the ABS transfer mode. When there is a signal, ABSB0 is on.	DO-1	
ABS transmission data bit 1	ABSB1	23	Indicates the upper bit of the absolute position data (2 bits) which is sent from the servo to the programmable controller in the ABS transfer mode. When there is a signal, ABSB1 is on.	DO-1	
ABS transmission data ready	ABST	25	Indicates ABS transmission data ready during ABS transfer mode. When ready, ABST is on.	DO-1	
Homing	CR	41	When CR is turned on, the position control counter is cleared and the home position data is stored into the non-volatile memory (backup memory).	DI-1	

*1 When "Used in absolute position detection system" is selected in [Pr. PA03], pin 17 acts as ABSM and pin 18 as ABSR. They do not return to the original signals even if data transfer is completed.

Startup procedure

1. Battery installation (when using a direct drive motor)

Refer to the following.

☞ Page 311 Battery

2. Servo parameter setting

Set [Pr. PA03.0] to "1" and cycle the power.

3. Canceling [AL. 025 Absolute position erased]

After the encoder cable is connected, [AL. 025] occurs at initial power-on. Cycle the power to deactivate the alarm.

4. Confirmation of absolute position data transfer

When SON is turned on, the absolute position data is transferred to the programmable controllers. Transferring the proper absolute position data will trigger the following.

- RD (Ready) turns on.
- The absolute position data ready setting of the programmable controller turns on.
- The ABS data display window in MR Configurator2 and programmable controller side ABS position data registers show the same value (at the home position address of 0). If a warning such as [AL. 0E5 ABS time-out warning] or a programmable controller transfer error occurs, refer to the following page and take corrective action.

☞ Page 441 Absolute position data transfer errors

📖MR-J5 User's Manual (Troubleshooting)

5. Homing

Homing is required in the following case.

- At system set-up
- At servo amplifier replacement
- At servo motor replacement
- When [AL. 025 Absolute position erased] has occurred

In the absolute position detection system, by executing a homing at system set-up, the absolute position coordinates is configured.

The servo motor shaft may operate unexpectedly if the positioning operation is performed without homing. Perform homing before starting.

Absolute position data transfer protocol

The following shows the data transfer procedure. After switching on ABSM, turn on SON. When ABSM is off, turning on SON does not switch on the base circuit.

Data transfer procedure

Each time SON is turned on, such as when the power is switched on, the current position data in the servo amplifier is read to the programmable controllers.

Time-out monitoring is performed on the programmable controllers side.

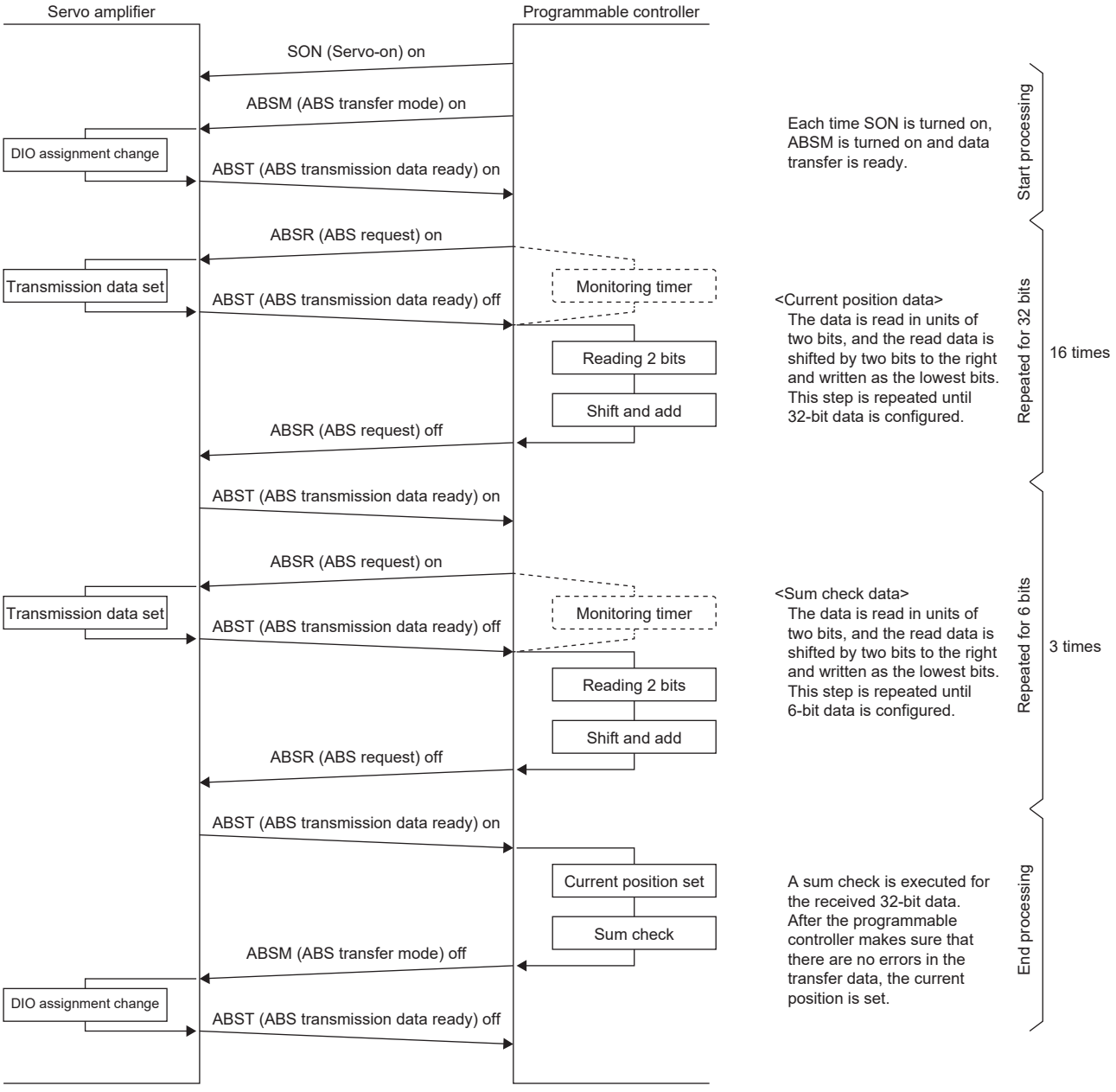

Transfer method

The following shows the procedure for turning on the base circuit again from when the base circuit is in off status because the SON and EM2 are off, or alarm occurred. In the absolute position detection system, every time SON signal is turned on, turn on ABSM to read the current position in the servo amplifier to the controller. In the servo amplifier, the current position latched on the timing when the ABSM turns on from off, are sent to the controller side. At the same time, this data is set as a position command value inside the servo amplifier. Unless ABSM is turned on, the base circuit cannot be turned on.

■At power-on

[Timing chart]

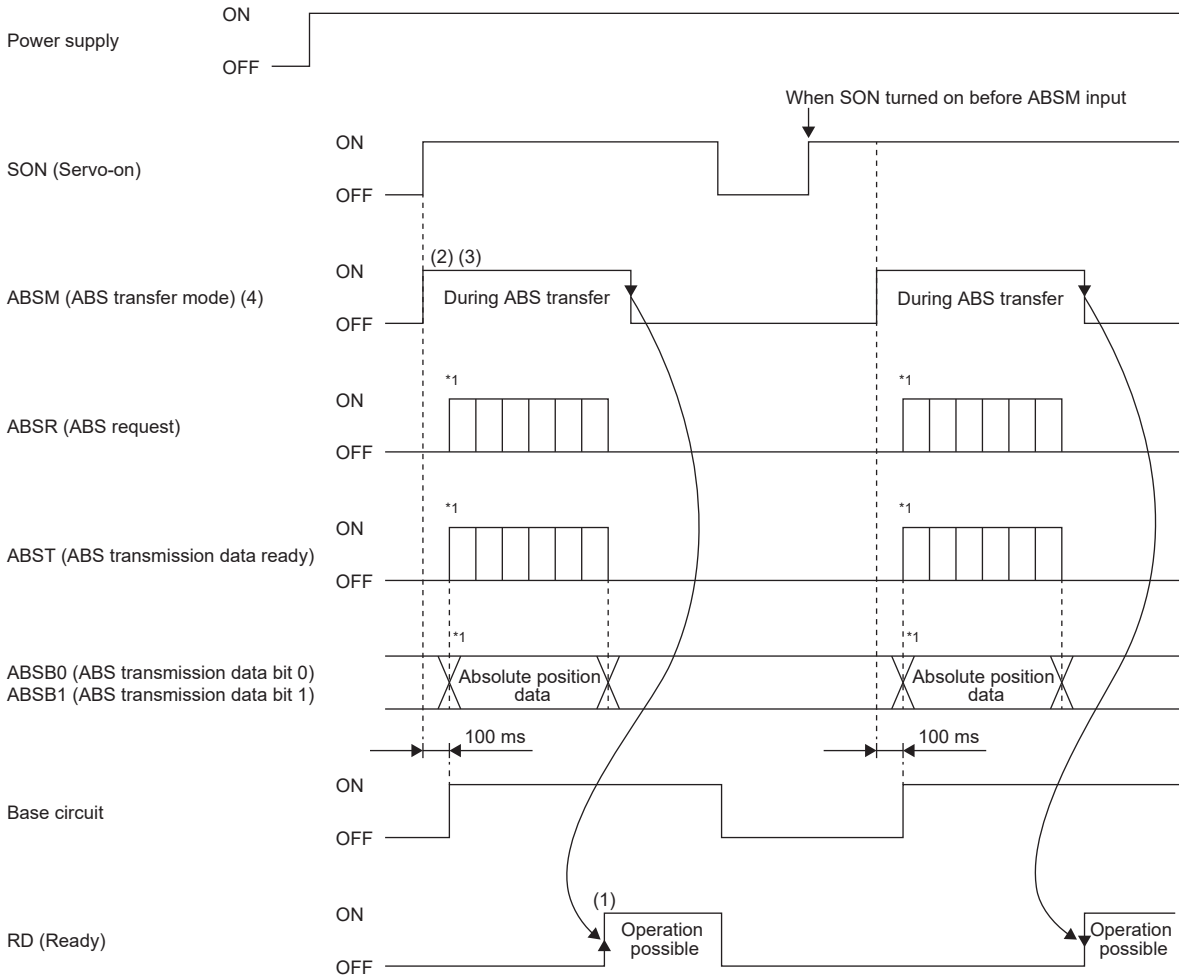

After the absolute position data is transmitted, RD turns on by ABSM-off. When RD is on, ABSM-on is not received. (1)
Even if SON is turned on before ABSM is turned on, the base circuit is not turned on until ABSM is turned on.
If an alarm occurs, ABSM transfer is not received. If a warning occurs, ABSM transfer can be received. (2)
If ABSM is turned off during the ABSM transfer mode, the ABS transfer mode is interrupted and [AL. 0E5 ABS time-out warning] occurs. (3)
If SON is turned off, RES is turned on, or EM2 is turned off during the ABS transfer mode, [AL. 0E5] occurs.
The output signal functions of ABST, ABSB0, and ABSB1 are switched by the following conditions. (4)

CN3 pin No.	Output signal	
	ABSM (ABS transfer mode): Off	ABSM (ABS transfer mode): On
22	In-position	ABS transmission data bit 0
23	Zero speed detection	ABS transmission data bit 1
25	Limiting torque	ABS transmission data ready

ABSM transfer cannot receive while the base circuit is on. For re-transferring, turn off SON signal and keep the base circuit in the off state for 20 ms or longer. (5)

• Detailed explanation of absolute position data transfer

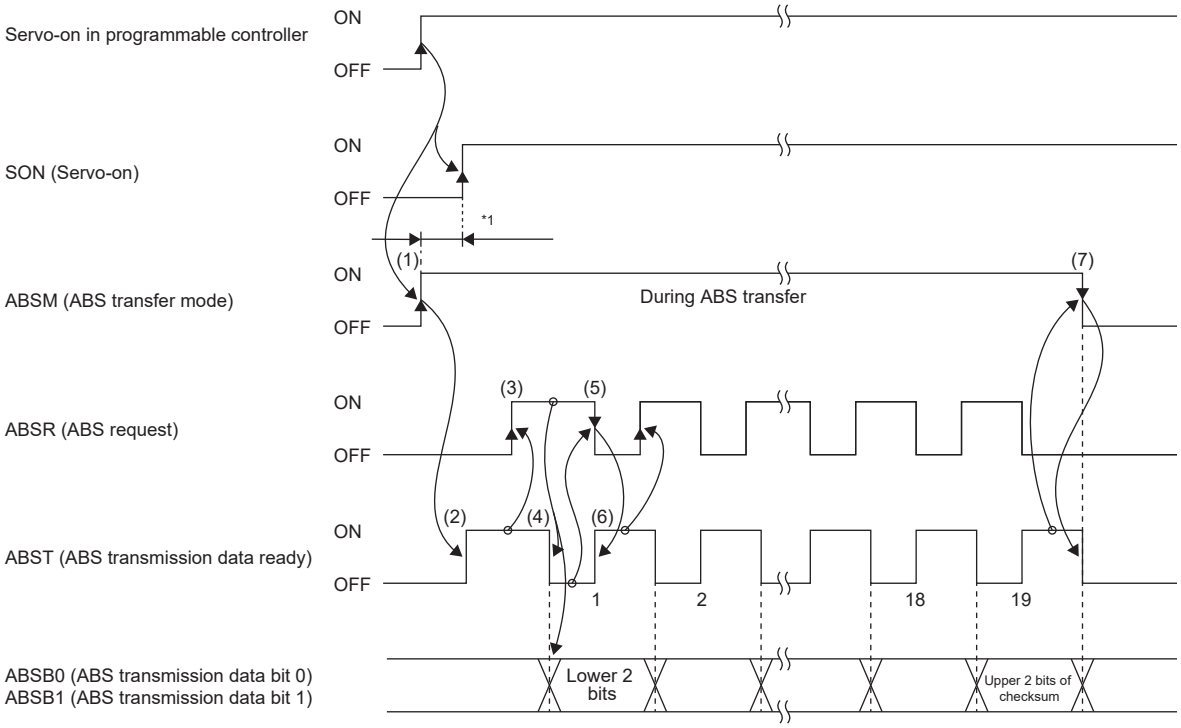

*1 If SON does not turn on within 1 s after ABSM on, [AL. 0EA ABS servo-on warning] will occur. However, the alarm will not influence the transfer. SON on will cancel [AL. 0EA] automatically.

The programmable controller turns on ABSM and SON at the rising edge of the internal servo-on. (1)

In response to the ABS transfer mode, the servo detects and calculates the absolute position, then turns on ABST to notify the programmable controller that the servo is ready for data transmission. (2)

After recognizing that ABST has turned on, the programmable controller will turn on ABSR. (3)

In response to ABSR, the servo outputs the lower 2 bits of ABS and turns off ABST. (4)

The programmable controllers recognizes that the ABST has turned off (ABS 2 bits data have been output), reads the lower 2 bits of ABST and turns off ABSR. (5)

The servo turns on ABST to respond to the next request. Step (3) to (6) are repeated until 32-bit data and the 6-bit checksum have been transmitted. (6)

After receiving of the checksum, the programmable controller confirms that the 19th ABST is turned on, and then turns off ABSM. If ABSM is turned off during data transmission, the ABS transfer mode is interrupted and [AL. 0E5] occurs. (7)

• Checksum

The checksum is the code which is used by the programmable controller to check for errors in the received absolute position data. The 6-bit checksum is transmitted following the 32-bit absolute value data.

Calculate the sum of the received absolute position data using the sequence program and compare it with the checksum code sent from the servo.

The following shows how to calculate the checksum. The checksum will add every ABS 2-bit data input to the total. The checksum is 6-bit data.

(Example) Absolute value data: -10 (FFFFFFF6h)

10^{b}
01^{b}
11^{b}
11^{b}
11^{b}
11^{b}
11^{b}
11^{b}
11^{b}
11^{b}
11^{b}
11^{b}
11^{b}
11^{b}
11^{b}
+) 11^{b}
101101^{b}

<Supplement>

Decimal -10

Hexadecimal FFFF FFF6

Binary 1111 1111 1111 • • • • • • 0110

The binary addition result is 101101^{b}.

Therefore, the checksum of -10 is "2Dh".

■Transmission error

In the ABS transfer mode, the servo amplifier processes time-out below, and displays [AL. 0E5] when a time-out error occurs. [AL. 0E5 ABS time-out warning] is canceled when ABSM changes from off to on.

• ABS request off-time time-out check (applied to 32-bit absolute position data in 2-bit units + checksum)

If the ABS request signal from the programmable controller is not turned on within 5 s after ABST is turned on, this will be treated as a transmission error and [Al. 0E5 ABS time-out warning] occurs.

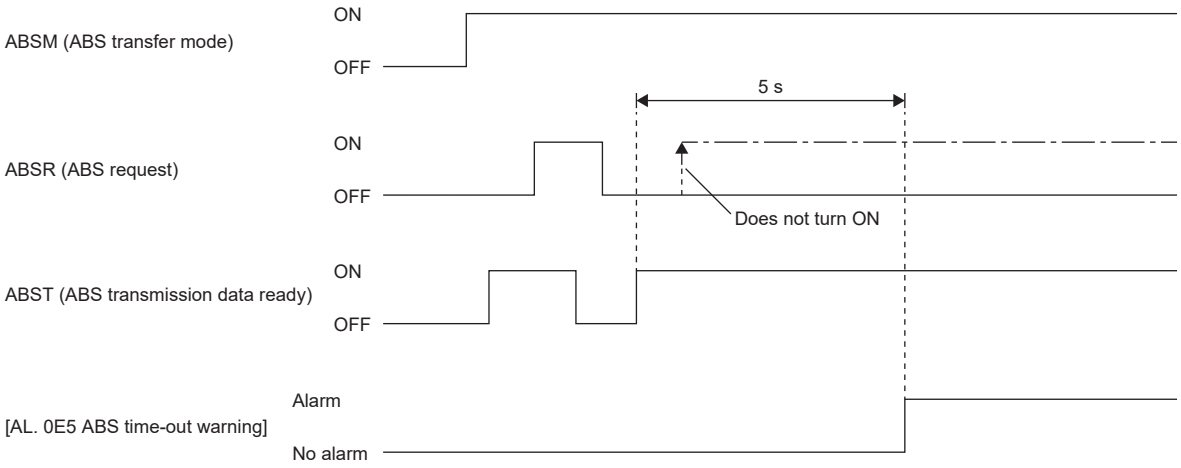

• ABS request on-time time-out check (applied to 32-bit absolute position data in 2-bit units + checksum)

If the ABSR is not turned off by the programmable controller within 5 s after ABST is turned off, this will be treated as a transmission error and [AL. 0E5] occurs.

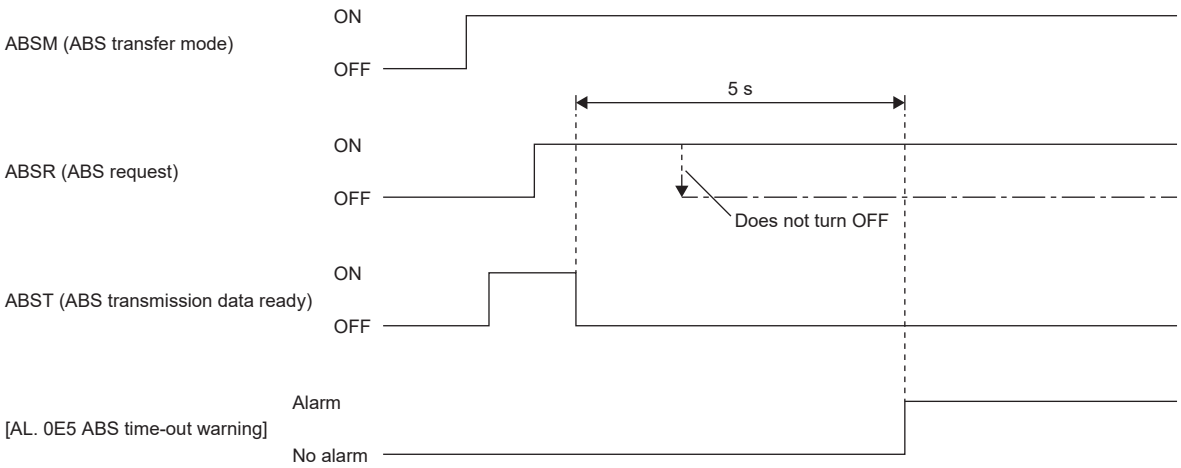

• ABS transfer mode finish-time time-out check

If ABSM is not turned off within 5 s after the last ABS transmission data ready (19th signal for absolute position data transmission) is turned on, this will be treated as a transmission error and [AL. 0E5] occurs.

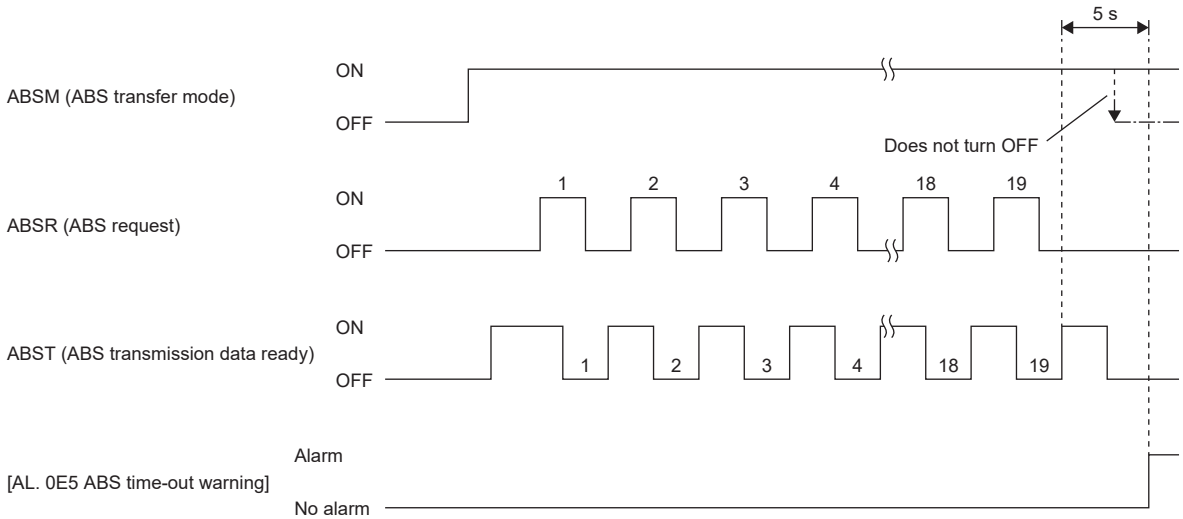

• ABSM-off check during the ABS transfer

If the ABS transfer mode is turned on, and after the transfer starts, if the ABSM is turned off before the 19th ABS transmission data ready, this will be treated as a transmission error and [AL. 0E5] occurs.

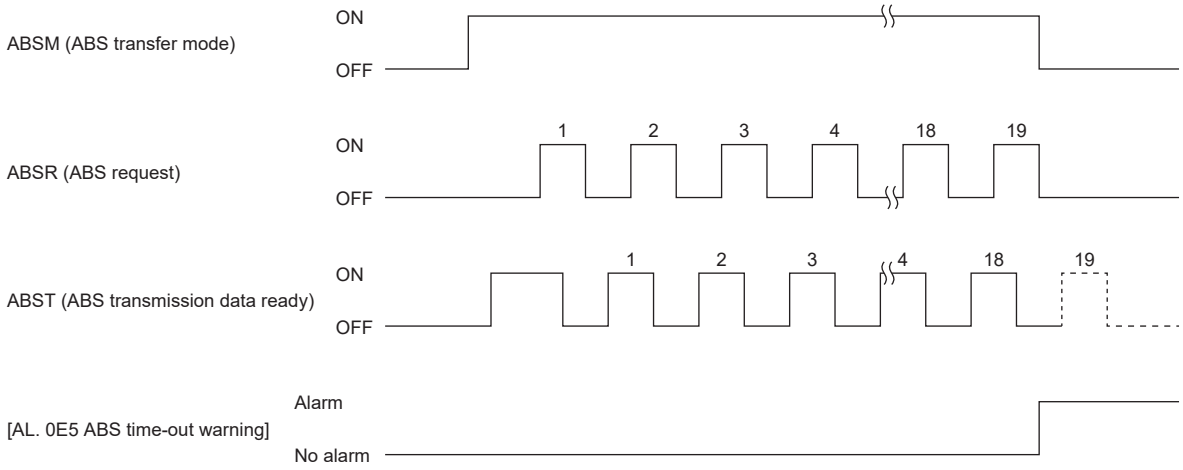

• SON-off, RES-on, and EM2-off check during the ABS transfer

If the ABS transfer mode is turned on, and after the transfer starts, if SON-off, RES-on, or EM2-off before the 19th ABST is on, this will be treated as a transmission error and [AL. 0E5] occurs.

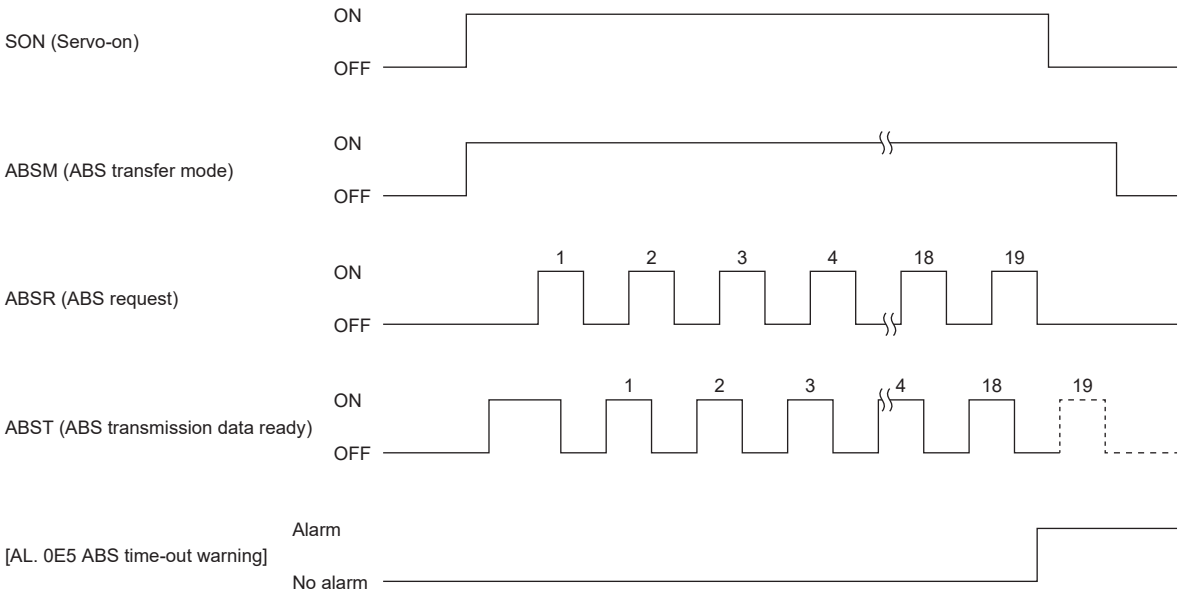

• Checksum error

If the checksum error is detected, retry the transmission of the absolute position data.

Using the sequence check program of the programmable controllers, turn off ABSM, and after a lapse of 10 ms or longer, turn SON off once (off time longer than 20 ms is required), then turn on SON again.

If the absolute position data transmission is not completed normally even after retry, perform the ABS checksum error and error processing.

When a checksum error occurs, the start command should be interlocked with ABST to disable the positioning operation.

The following shows an example of three retries are performed.

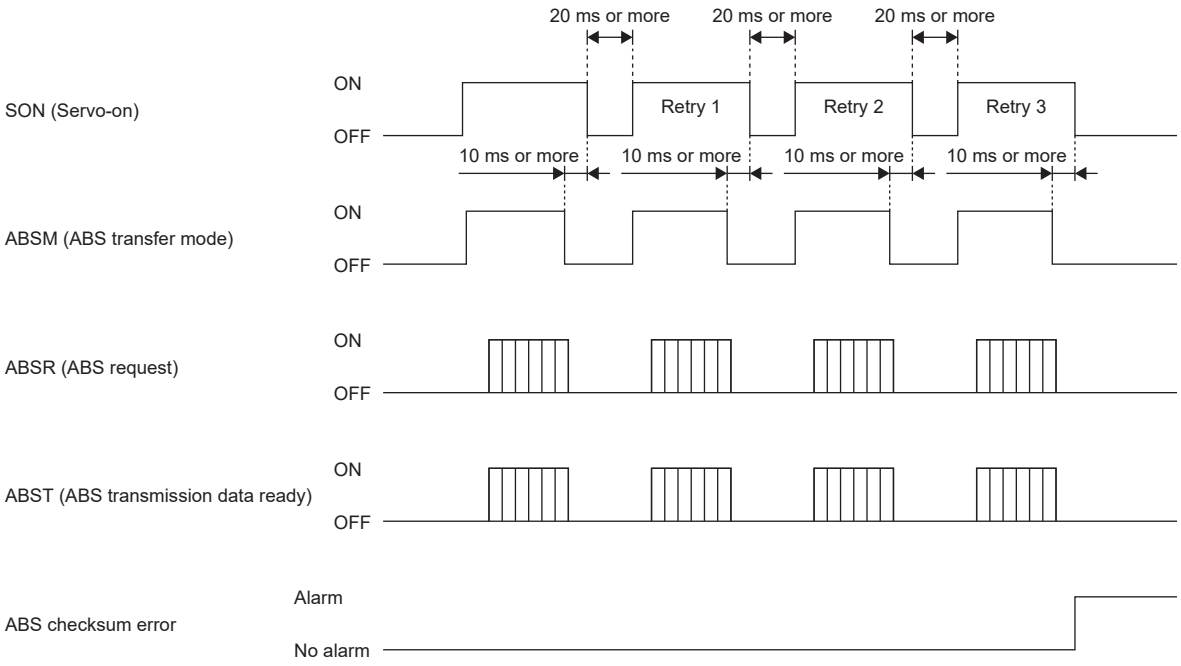

■Alarm cancellation

If an alarm occurs, detect ALM and turn off SON. While an alarm is occurring, ABSM is not received. After removing the alarm factor, cancel the alarm and then turn on ABSM. During reset, ABSM is received.

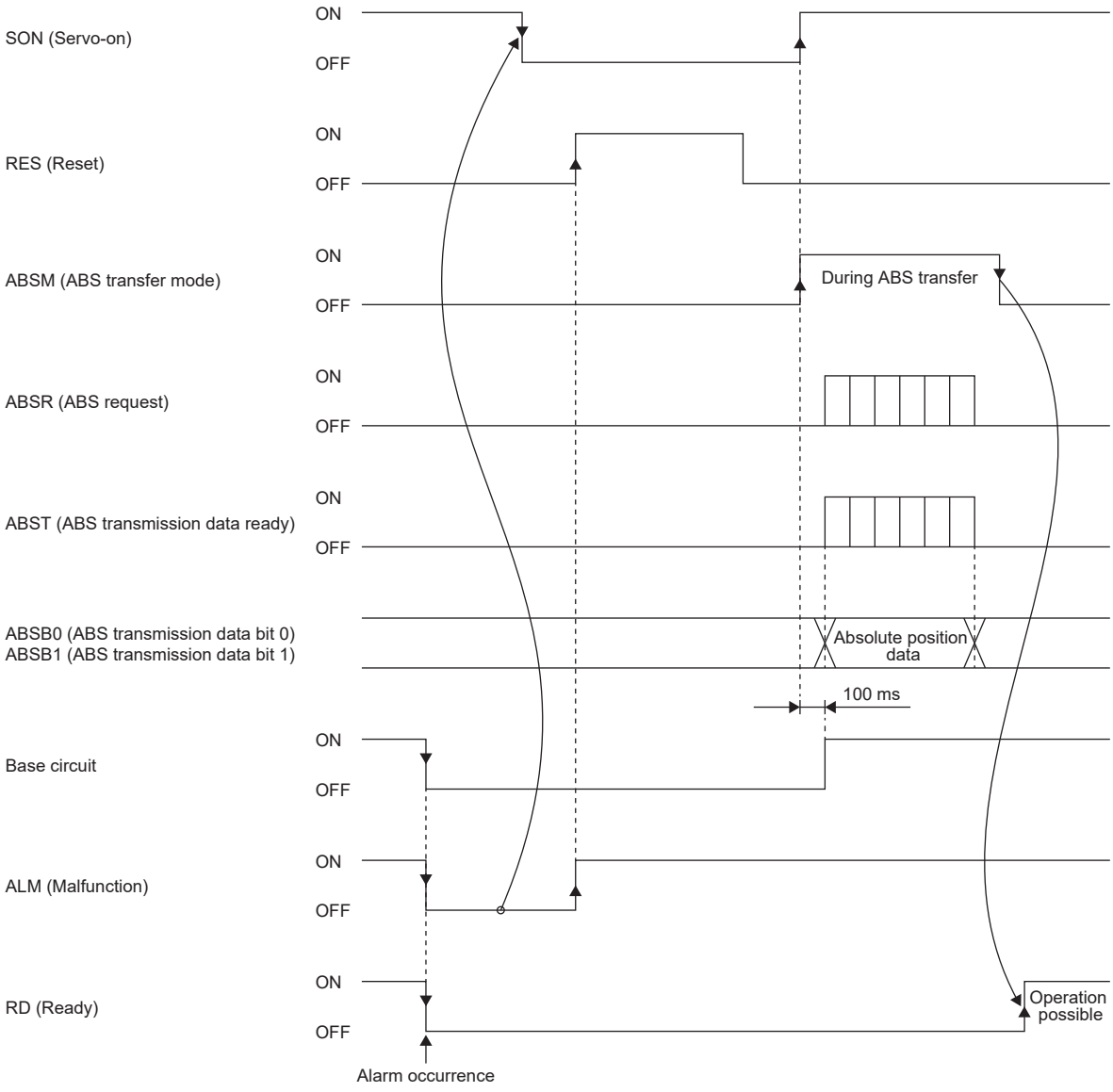

■During forced stop release

• When power is switched on in a forced stop status

Even if forced stop is canceled during absolute position data transfer, there is no problem with the transfer. If forced stop is canceled during the absolute position data transfer, the base circuit turns on 200 ms to 450 ms after the cancellation. If ABSM is off, RD is turned on 5 ms after the base circuit turns on. If ABSM is on, RES is turned on after ABSM is turned off. ABS transfer can be done even after forced stop cancellation.

The current position in the servo amplifier is updated even during a forced stop. As shown in the following diagram, when SON or ABSM is turned on at forced stop, at the timing of when ABSM switches from off to on, the servo amplifier simultaneously send the latched current position to the controller side, and the servo amplifier sets this data as the position command value. However, since the base circuit is off during a forced stop, the status does not switch to servo-lock. Therefore, if the servo motor is rotated by external force or the like after ABSM is turned on, this travel distance is accumulated in the servo amplifier as droop pulses. If the forced stop is canceled at this status, the base circuit turns on and returns to the original position rapidly to compensate for the droop pulses. To avoid this status, read the absolute position data again before canceling the forced stop.

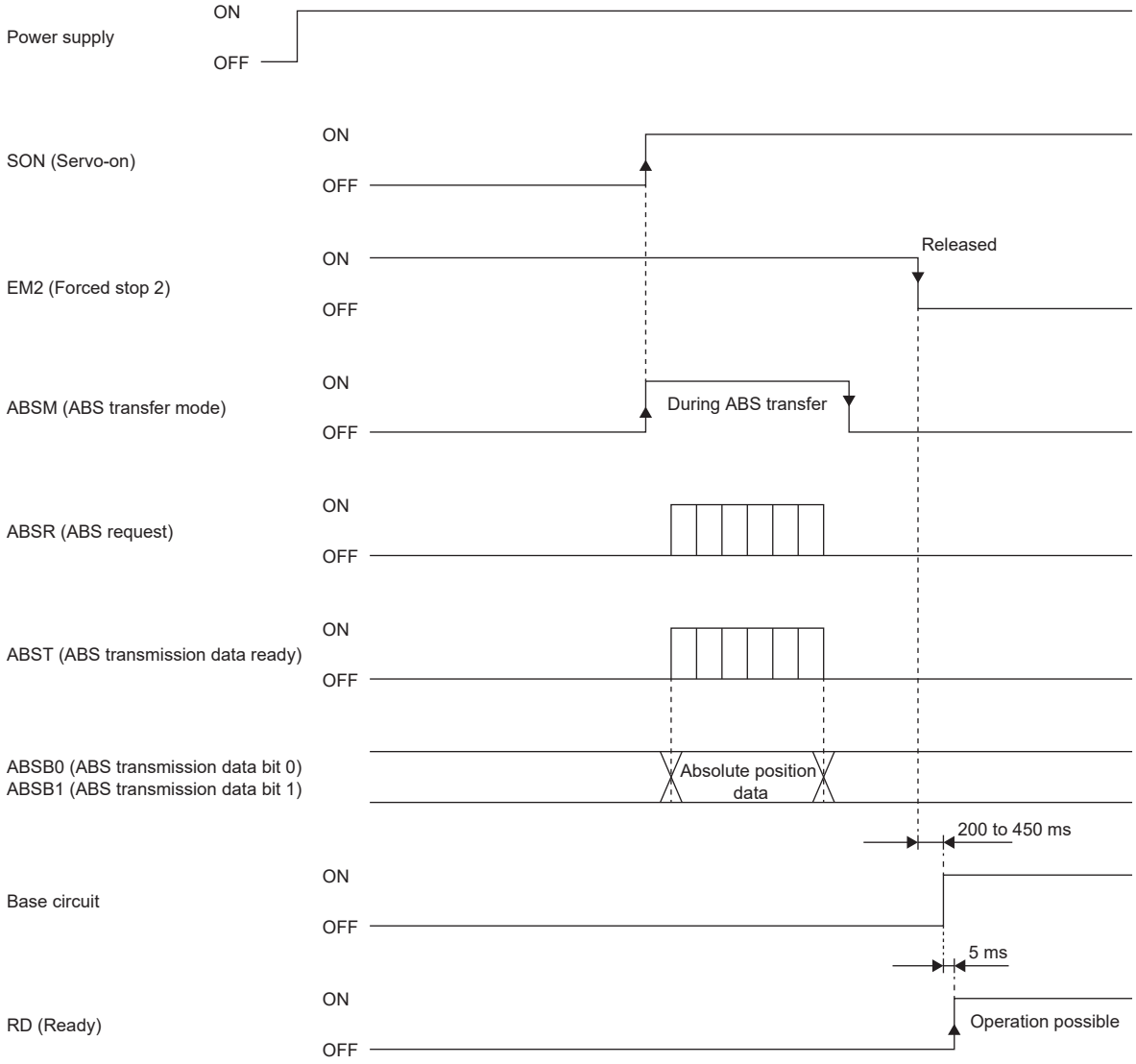

• If forced stop is activated during servo-on

ABSM can be received during forced stop. However, the base circuit and RD turn on after the forced stop is canceled.

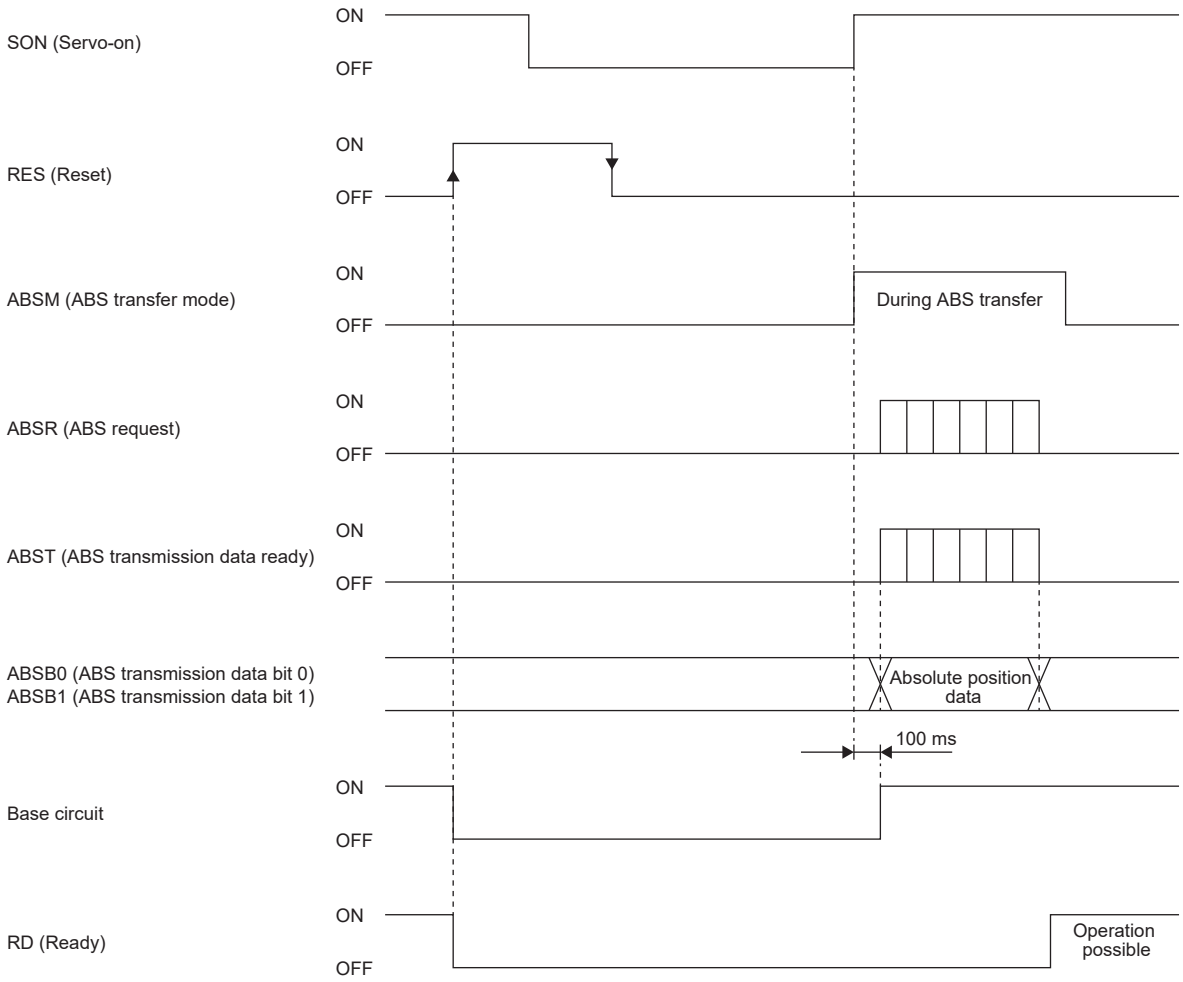

Homing

■Dog type homing

Set the creep speed of homing in advance to prevent shock from hitting the machine. On detection of a zero pulse, CR (homing) is turned from off to on. At the same time, the servo amplifier clears the droop pulses, comes to a sudden stop, and stores the stop position into the non-volatile memory as the home position absolute position data.

CR should be turned on after checking that INP has turned on. If this condition is not satisfied, [AL. 096 Home position setting warning] occurs. If homing is performed correctly, the alarm is automatically canceled.

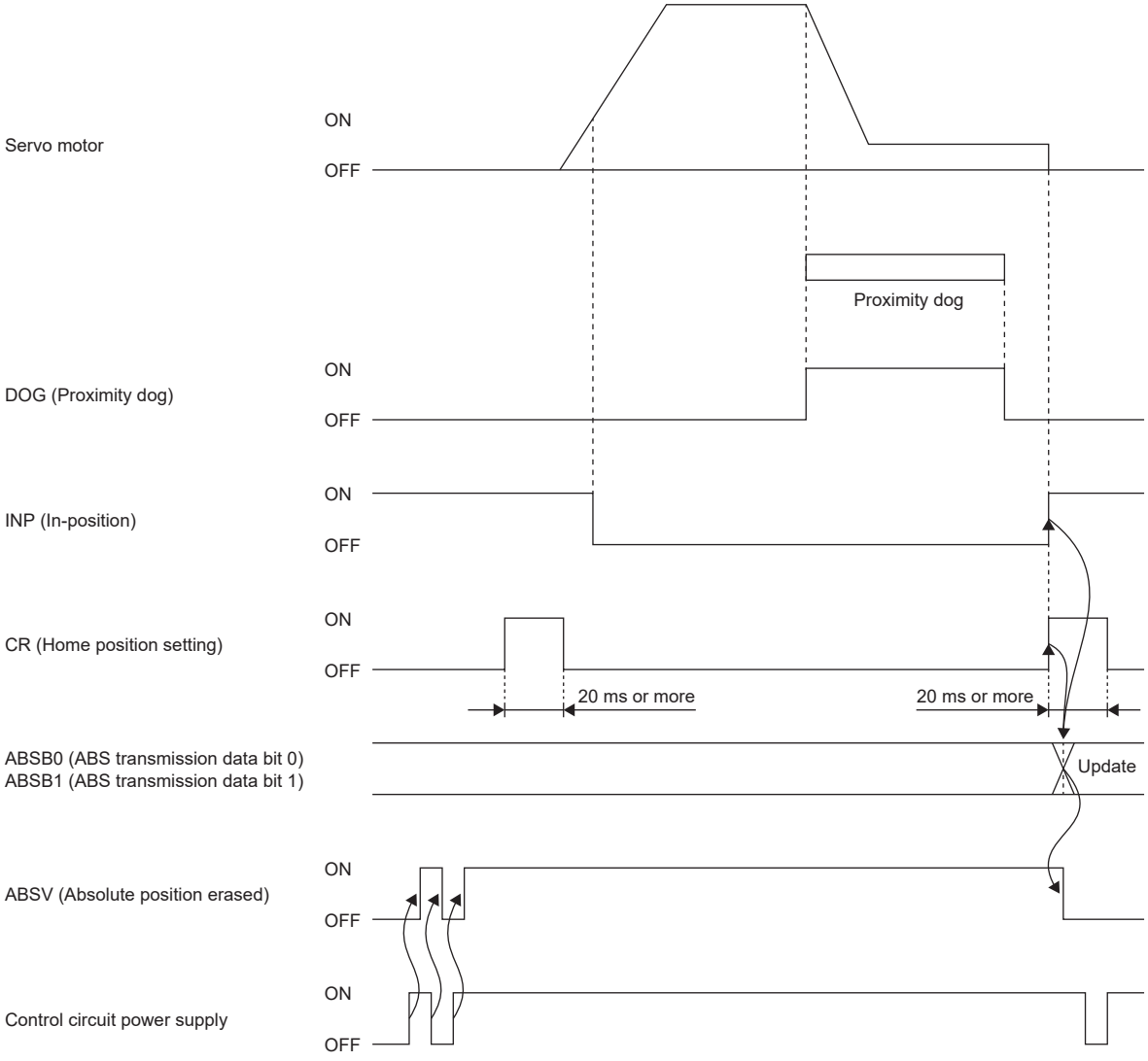

■Data set type homing

Move the machine to the position where the home position is to be set by performing the manual operation such as JOG operation. When CR is on for longer than 20 ms, the stop position is stored into the non-volatile memory as the home position absolute position data.

CR during servo-on should be turned on after checking that INP has turned on. If this condition is not satisfied, [AL. 096 Home position setting warning] occurs. If homing is performed correctly, the alarm is automatically canceled.

Homing can be performed during the servo-off.

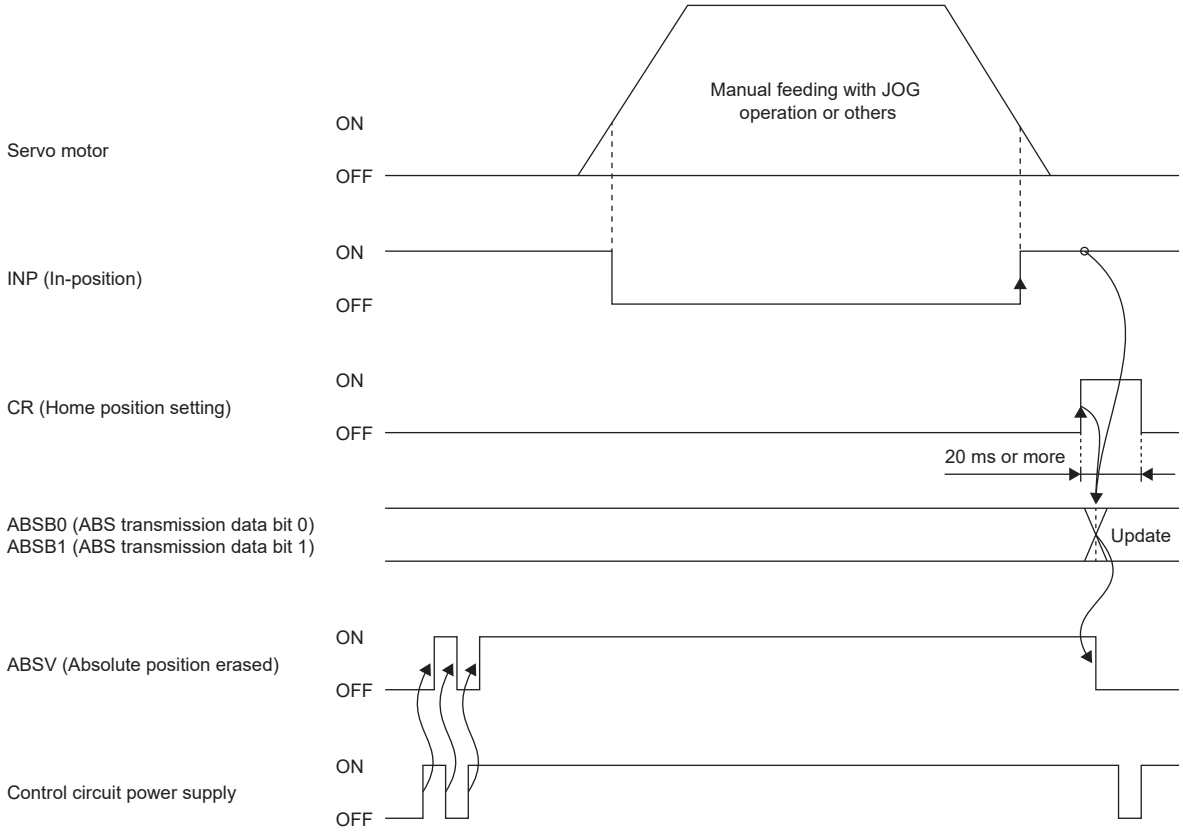

Using a servo motor with an electromagnetic brake

The following shows the timing chart at power on/off and SON on/off.

Preset [Pr. PD23] to [Pr. PD26], [Pr. PD28], and [Pr. PD47] of the servo amplifier to enable MBR.

When MBR is set for the CN3-23 pin, turning ABSM on will change the CN3-23 pin to ABSB1 (ABS transmission data bit 1). Therefore, configure an external sequence to generate the electromagnetic brake torque at ABSM or MBR off.

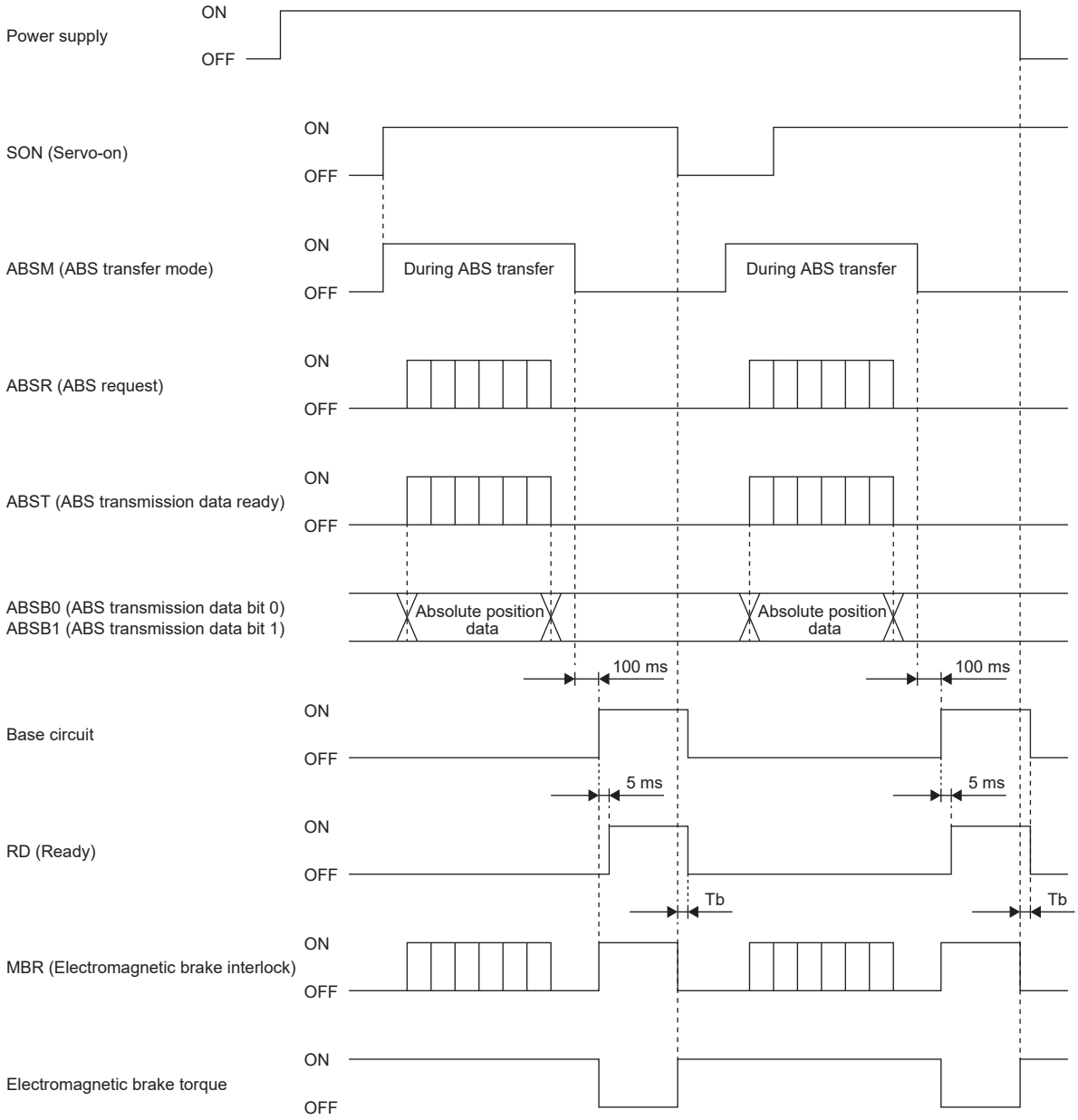

How to process the absolute position data at stroke end detection

The servo amplifier stops receiving the command pulse when LSP or LSN off is detected, and at the same time clears the droop pulses, and stops the servo motor. At this time, the programmable controllers continue outputting the command pulse. Since this causes a discrepancy between the absolute position data of the servo amplifier and the programmable controller, position mismatch will occur if the operation is continued.

When the servo amplifier has detected the stroke end, release stroke end detection by JOG operation and the like, turn on SON again or cycle the power. By cycling the power, the absolute position data of the servo amplifier is transferred to the programmable controllers, and the normal absolute position data is restored.

Absolute position data transfer errors

1. The off period of output ABS transmission data ready from the servo amplifier is checked.

When the off period of ABS transmission data ready is 1 s or longer, treat this as a transmission error and generate the ABS communication error.

Generate the ABS communication error if [AL. 0E5 ABS time-out warning] occurs in the servo amplifier due to an ABS request on-time time-out.

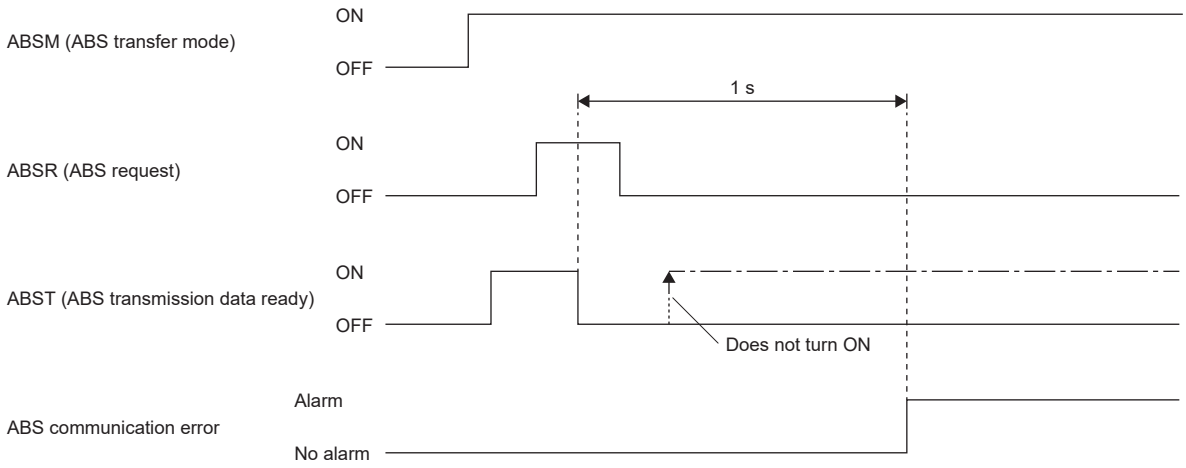

2. After the ABS transfer mode signal turns on, check the time it takes to turn off (ABS transfer time).

If the ABS transfer time is longer than 5 s, treat this as a transmission error and generate the ABS communication error.

Perform the ABS communication error if [AL. 0E5] occurs in the servo amplifier due to an ABS transfer mode completion-time time-out.

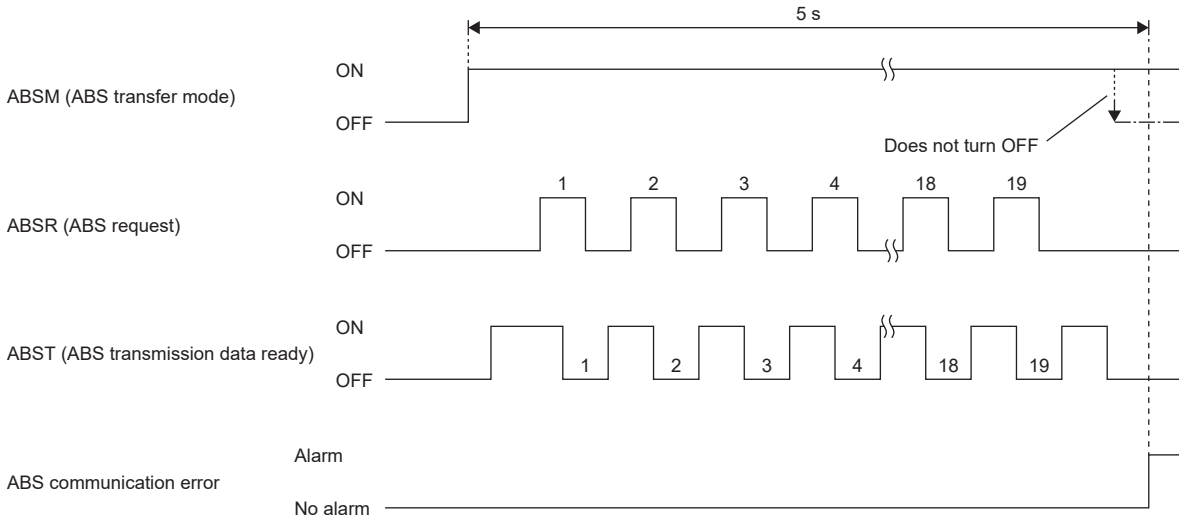

3. After the ABS request signal turns on, check the time it takes to turn off (ABS transfer time).

[AL. 0E5 ABS time-out warning] occurrence in the servo amplifier is detected. If the ABS request time is longer than 1 s, treat this as an error in ABSR or ABST and generate the ABS communication error.

Perform the ABS communication error if [AL. 0E5] occurs in the servo amplifier due to ABS request off-time time-out.

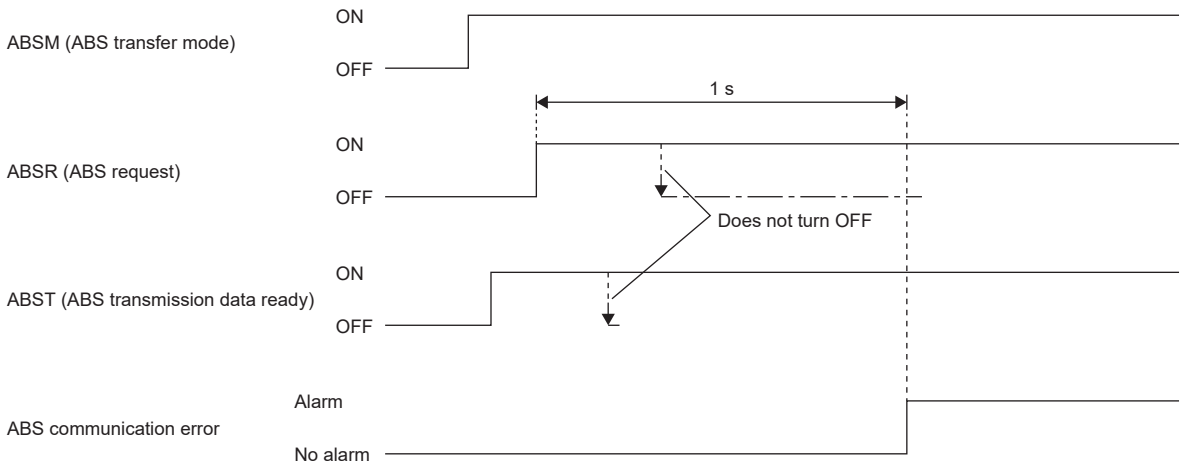

7.4 Absolute position detection system via communication [A]

Point

The absolute position detection system via communication is available on servo amplifiers with firmware version B6 or later.

The absolute position detection system via communication establishes the absolute position between the controller and servo amplifier, by transferring the absolute position information from the servo amplifier to the controller using the serial communication.

Serial communication command

The following shows the commands to read absolute position data using the serial communication function. When reading the data, ensure that the station No. of the servo amplifier is correct.
Sending the data No. from the master station to the slave station (servo amplifier) returns the data value to the master station.

Transmission

Transmit the command [0] [2] + data No. [9] [1].

Return

The servo amplifier returns the absolute position data in the command pulse unit in hexadecimal.

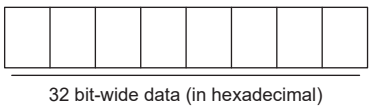

Absolute position data transfer protocol

Data transfer procedure

Each time SON is turned on, such as when the power is switched on, the controller needs to read the current position data in the servo amplifier.

If this operation is not performed, position mismatch may occur. Perform time-out monitoring on the controller side.

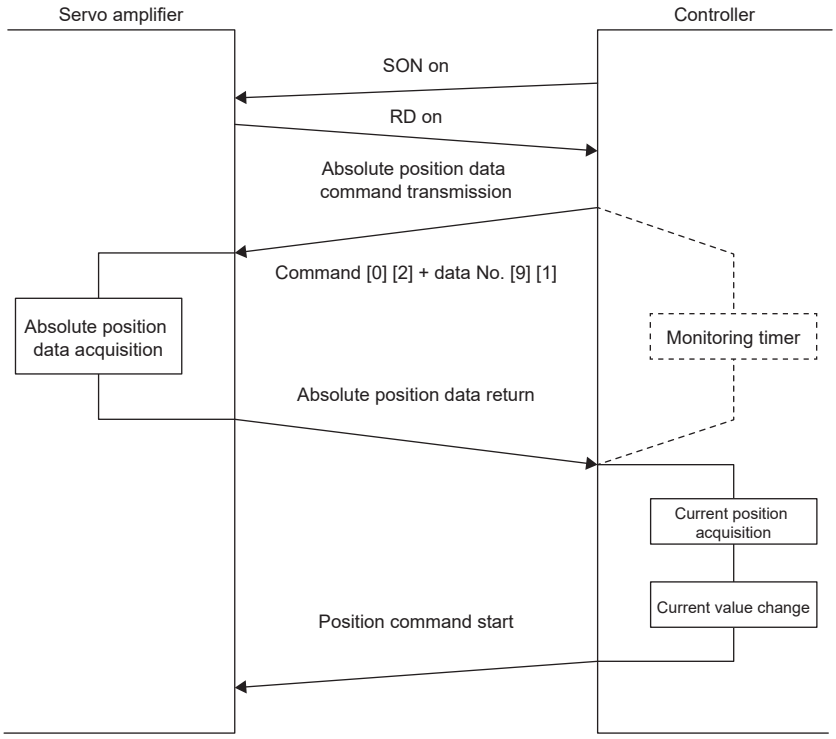

Transfer method

The following shows the procedure for turning on the base circuit again from when the base circuit is in off status because the SON and EM2 are off, or alarm occurred. In the absolute position detection system, read the current position in the servo amplifier to the controller using the serial communication command each time RD is turned on. The servo amplifier transmits the current position at the time of command reception to the controller side. At the same time, this data is set as a position command value inside the servo amplifier.

■Sequence processing at power-on

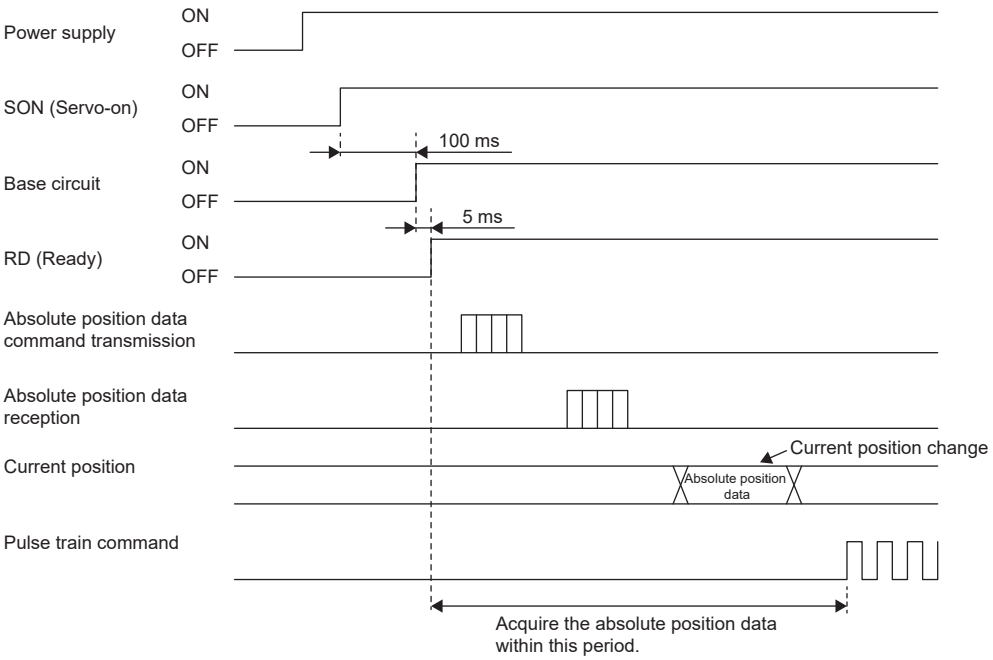

1. The base circuit turns on after 100 ms.
2. After the base circuit turns on, RD turns on.
3. After RD turns on, the controller acquires the absolute position data. Then, give a command pulse to the servo amplifier. If a command pulse is given before the controller acquires the absolute position data, position mismatch may occur.

■Communication errors

If a communication error occurs between the controller and servo amplifier, the servo amplifier transmits a corresponding error code.

The descriptions of the error codes are the same as the error codes in the communication function. For details, refer to "Mitsubishi Electric AC servo protocol" in the following manual.

📖MR-J5 User's Manual (Function)

If a communication error occurs, execute retry. If the communication does not terminate normally even after retrying several times, perform error processing.

■Alarm cancellation

If an alarm occurs, detect ALM and turn off SON. After removing the cause of the alarm and deactivating the alarm, acquire the absolute position data from the servo amplifier again with the following procedure.

☞ Page 445 Sequence processing at power-on

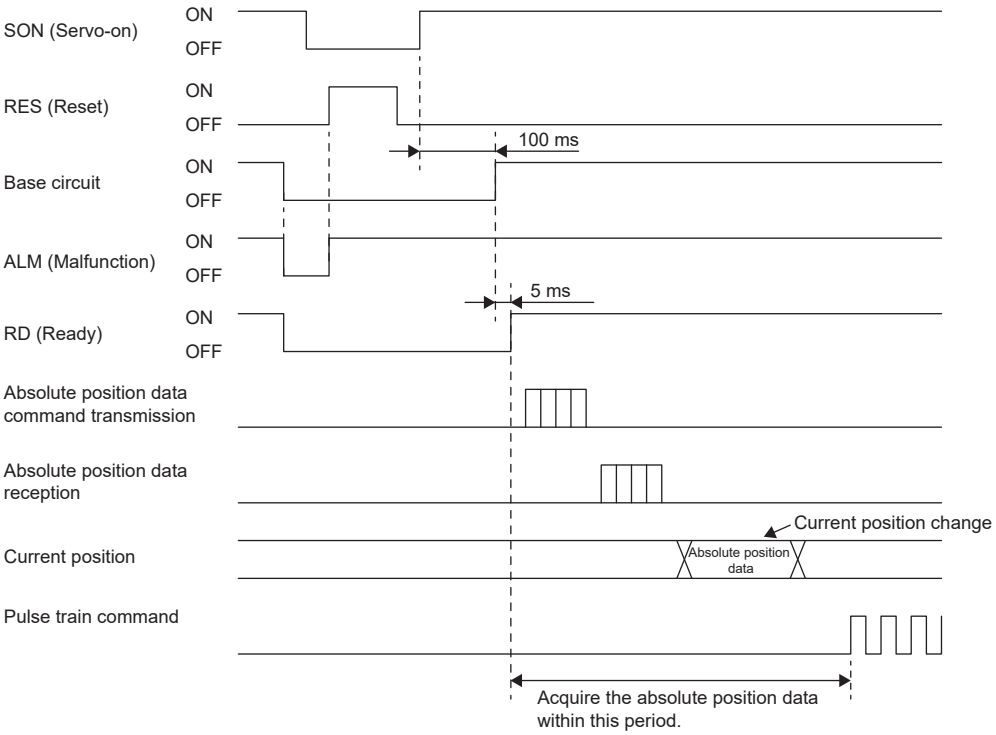

■During forced stop release

Releasing the forced stop turns on the base circuit after approximately 200 to 450 ms, then RD turns on 5 ms after the base circuit turns on.

Acquire the current position before RD triggers the position command.

- When power is switched on in a forced stop status

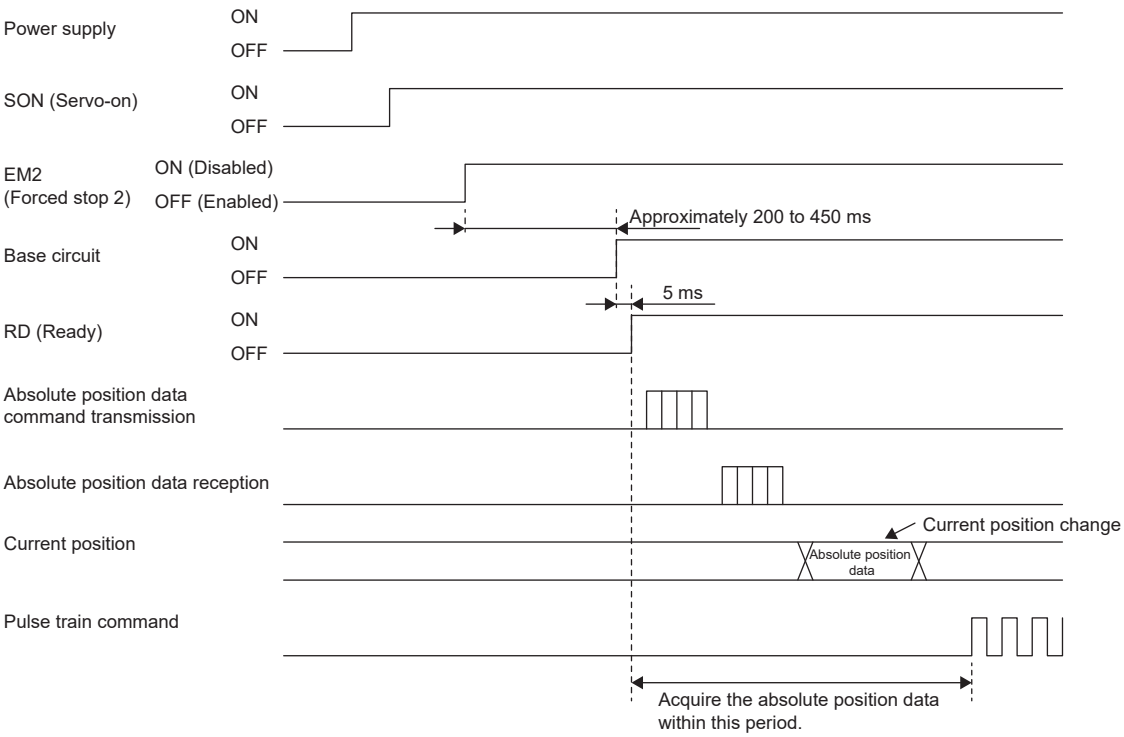

8 USING STO FUNCTION

Precautions

- In the torque mode, the forced stop deceleration function cannot be used.
- When using the STO function in the MR-J5-_G_-HS_, refer to "USING STO FUNCTION" in the following manual.

📖MR-J5 User's Manual (Function)

8.1 Introduction

This section provides the cautions of the STO function.

For information on implementing functional safety, refer to the following page.

☞ Page 461 USING FUNCTIONAL SAFETY [G] (EXCULUDING MR-J5-_G_-HS_)

For details, refer to "STO function" in the following manual.

📖MR-J5 User's Manual (Function)

Precautions

- Do not improperly install safety-related components or systems. Installation should be performed by qualified personnel.

Outline

This servo amplifier complies with the following safety standards.

Item	MR-J5-_G(4)/MR-J5-_B_/MR-J5W_-_B_/MR-J5-_A_	MR-J5-_G(4)-RJ/MR-J5W_-_G
Safety sub-function	STO (IEC/EN 61800-5-2)	
Standard	EN ISO 13849-1:2015 Category 3 PL e, IEC 61508 SIL 3, EN IEC 62061 maximum SIL 3, EN 61800-5-2	EN ISO 13849-1:2015 Category 4 PL e, IEC 61508 SIL 3, EN IEC 62061 maximum SIL 3, EN 61800-5-2

Terms related to safety

The STO function shuts off energy to servo motors, thus removing torque. MR-J5 shuts off the energy by turning off the power supply electronically in the servo amplifier.

The purpose of this function is as follows.

- Uncontrolled stop according to stop category 0 of IEC/EN 60204-1
- Preventing unexpected restart

Precautions

The following basic safety instructions must be read carefully and fully to prevent injury to persons or damage to property. Only qualified personnel are authorized to install, startup, repair, or adjust the machines in which these components are installed.

They must be familiar with all applicable local regulations and laws in which machines with these components are installed, particularly the standards mentioned in this user's manual.

The staff responsible for this work must be given express permission from the company to perform startup, programming, configuration, and maintenance of the machine in accordance with the safety standards.

This servo amplifier satisfies the Safe Torque Off (STO) function described in IEC/EN 61800-5-2 by preventing the energy supply from the servo amplifier to the servo motor. If an external force acts upon the drive axis, additional safety measures, such as brakes or counterbalances must be used.

Residual risks of the STO function

Machine manufacturers are responsible for all risk evaluations and all associated residual risks. Below are residual risks associated with the STO function. Mitsubishi Electric is not liable for any damages or injuries caused by these risks.

- The STO function disables energy supply to the servo motor by electrical shut-off. The function does not mechanically disconnect electricity from the motor. Therefore, this function cannot prevent exposure to electric shock. To prevent an electric shock, install a magnetic contactor or a molded-case circuit breaker to the main circuit power supply (L1/L2/L3) of the servo amplifier.
- The STO function disables energy supply to the servo motor by electrical shut-off. It does not guarantee stop control or deceleration control of the servo motor.
- For proper installation, wiring, and adjustment, thoroughly read the installation guide of each individual safety related component.
- In the safety circuit, use components that are confirmed safe or meet the required safety standards.
- The STO function does not guarantee that the drive part of the servo motor will not rotate due to external or other forces.
- Safety is not assured until safety-related components of the system are completely installed or adjusted.
- When replacing this servo amplifier, confirm that the new servo amplifier is exactly the same model as that being replaced. After the replacement, check the performance of the functions before using the system.
- Perform all risk assessments to the machine or the entire system.
- To prevent accumulation of malfunctions, perform function checks at regular intervals based on the risk assessments of the machine or the system. Regardless of the system safety level, malfunction checks should be performed at least once per year.
- If the upper and lower power modules in the servo amplifier are shorted and damaged simultaneously, the servo motor may make a half revolution at a maximum. For a linear servo motor, the primary side will move the distance of the pole pitch.
- Supply the STO input signals (STO1, STO2) from one power source. Otherwise, the STO function may not function properly due to a sneak current, failing to bring the STO shut-off state.
- For the I/O signals of the STO function, supply power by using a safety extra low voltage (SELV) power supply with the reinforced insulation.

Specifications

Servo amplifier specifications

For servo amplifier specifications, refer to "Functional safety" in the User's Manual (Introduction).

Function block diagram (STO function)

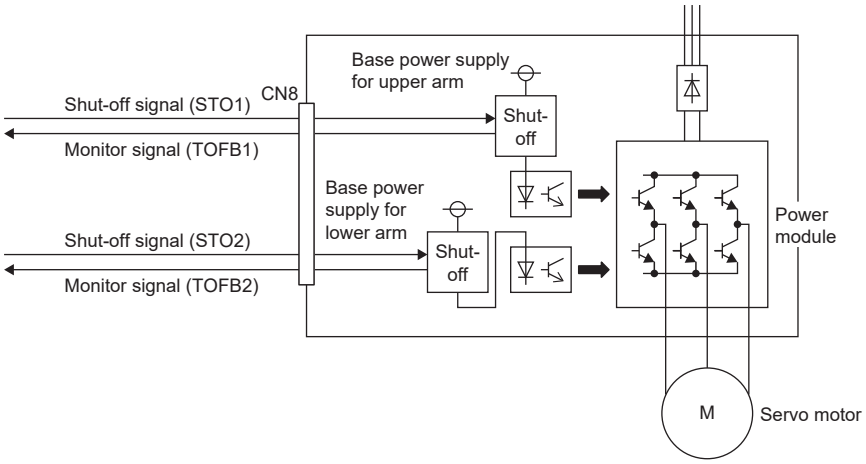

Operation sequence (STO function)

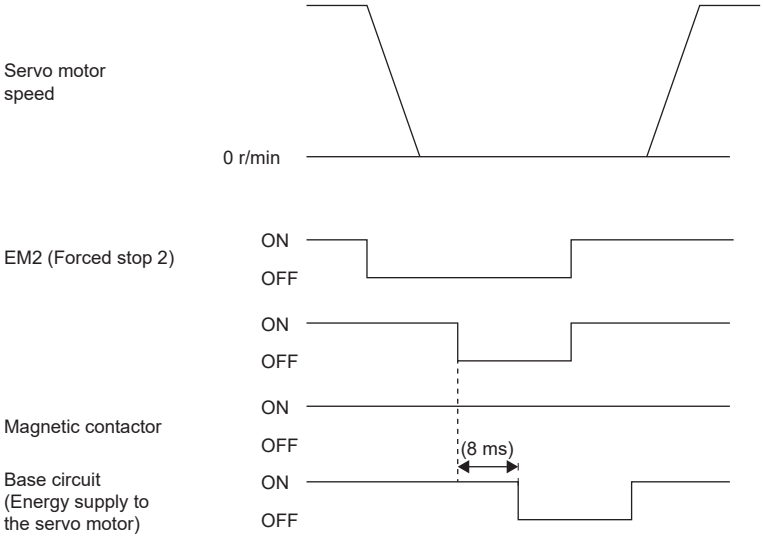

Maintenance

This servo amplifier has alarms and warnings for maintenance compatible with the Mitsubishi Electric Drive Safety function.

MR-J5 User's Manual (Troubleshooting)

8.2 Functional safety I/O signal connector (CN8) and pin assignments

Pin assignment

Point

The pin assignments of the connectors are as viewed from the cable connector wiring section.

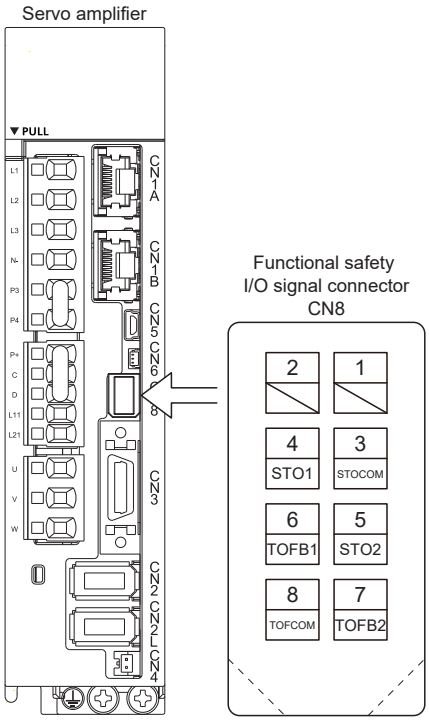

Signal (device) explanation

I/O device

Signal name	Connector pin No.	Description	I/O signal interface type
STOCOM	CN8-3	Common terminal for the STO1 and STO2 input signals	DI-1
STO1	CN8-4	Input the STO status of STO1. STO state (base circuit shut-off): Open between STO1 and STOCOM. STO release state (in driving): Close between STO1 and STOCOM. Before turning off STO1, stop the servo motor in the servo-off state or with forced stop deceleration by turning off EM2 (Forced stop 2).	DI-1
STO2	CN8-5	Input the STO status of STO2. STO state (base circuit shut-off): Open between STO2 and STOCOM. STO release state (in driving): Close between STO2 and STOCOM. Before turning off STO2, stop the servo motor in the servo-off state or with forced stop deceleration by turning off EM2 (Forced stop 2).	DI-1
TOFCOM	CN8-8	Common terminal for the monitor output signals for the STO status	DO-1
TOFB1	CN8-6	Outputs the STO status of STO1. STO state (base circuit shut-off): Closed between TOFB1 and TOFCOM. STO release state (in driving): Open between TOFB1 and TOFCOM.	DO-1
TOFB2	CN8-7	Outputs the STO status of STO2. STO state (base circuit shut-off): Closed between TOFB2 and TOFCOM. STO release state (in driving): Open between TOFB2 and TOFCOM.	DO-1

Signals and STO status

The following table shows the status of TOFB and STO for when STO1 and STO2 are ON (closed) or OFF (open) while the power is turned on in an operation with no alarms or warnings.

Input signal		Status			
STO1	STO2	Between TOFB1 and TOFCOM (STO1 state)	Between TOFB2 and TOFCOM (STO2 state)	Between TOFB1 and TOFB2 (STO state)	STO
OFF	OFF	ON: STO state	ON: STO state	ON	STO state
OFF	ON	ON: STO state	OFF: STO release state	OFF *1	STO state
ON	OFF	OFF: STO release state	ON: STO state	OFF *1	STO state
ON	ON	OFF: STO release state	OFF: STO release state	OFF	STO release state

*1 Between TOFB1 and TOFB2 is off, but the servo amplifier is in the STO state.

Test pulse of STO input signal

Set the test pulse off time inputted from outside to 1 ms or less.

How to pull out the STO cable

The following shows how to pull out the STO cable from the CN8 connector of the servo amplifier.
With the clip (1) of the STO cable plug pressed in the direction of the arrow, hold the plug (2) and pull out.

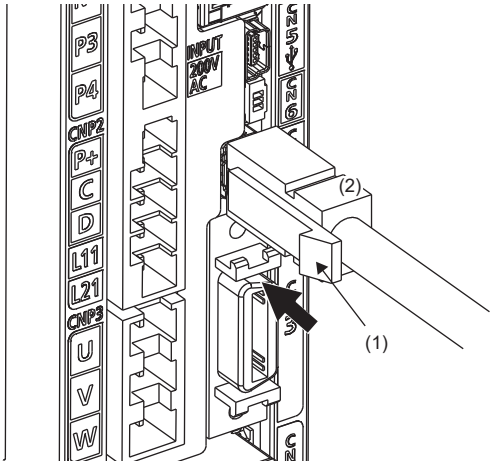

8.3 Connection example

Precautions for compliance with stop category 1 (IEC/EN 60204-1)

Point

- Before turning off STO (STO1 and STO2), stop the servo motor in the servo-off state or by turning off EM2 (Forced stop 2) (delay by SS1). Configure an external sequence that has the timings shown below by using an external device.

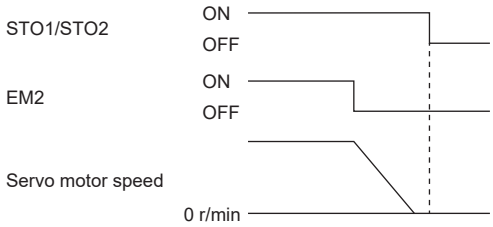

- If STO is turned off during operation, the servo motor stops with the dynamic brake stop (stop category 0).

Precautions for compliance with stop category 0 (IEC/EN 60204-1)

Point

- Before turning off STO (STO1 and STO2), make the servo-off state or turn off EM1 (Forced stop 1). If servo parameter "STO timing error selection" is set to "1 (Not detected)", wiring to EM1 can be omitted. Configure an external sequence that has the timings shown below by using an external device.

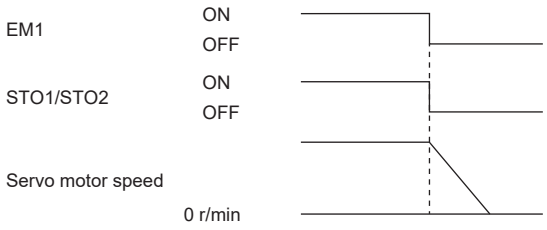

Connection example for CN8 connector

This servo amplifier is equipped with the connector (CN8) which enables the STO function. When this connector is used with a certified external safety relay, power to the motor can be safely removed and unexpected restart can be prevented. The safety relay used should meet the applicable safety standards and have forcibly guided contacts or mirror contacts for the purpose of error detection.

The following diagram is for source interfaces. For sink interfaces, refer to the following.

☞ Page 458 Sink I/O interface

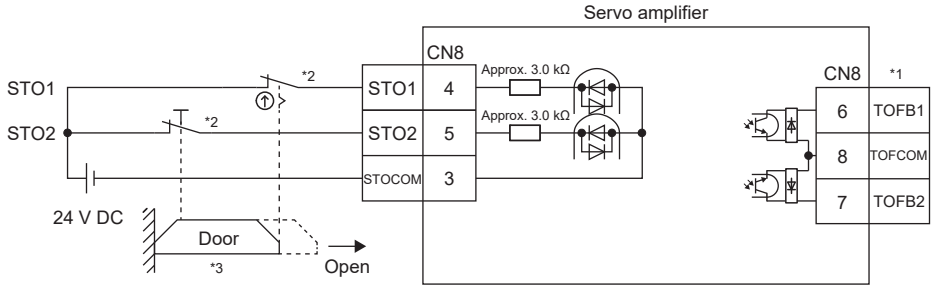

*1 With TOFB, whether the servo is in the STO state can be confirmed. Refer to the following for a connection example.
☞ Page 456 External I/O signal connection example using an external safety relay unit
The safety level depends on the setting values of [Pr. PF18 STO diagnosis error detection time] and [Pr. PSD18_Permissible time for mismatches DI1] and whether STO input diagnosis by TOFB output is performed or not. For details, refer to [Pr. PF18] and [Pr. PSD18] in the following manuals.
MR-J5-G/MR-J5W-G User's Manual (Parameters)
MR-J5-B/MR-J5W-B User's Manual (Parameters)
MR-J5-A User's Manual (Parameters)

*2 When using the STO function, turn off STO1 and STO2 at the same time. Also, before turning off STO1 and STO2, stop the servo motor in the servo-off state or with forced stop deceleration by turning off EM2 (Forced stop 2).

*3 Configure the interlock circuit so that the door opens after the servo motor stops.

External I/O signal connection example using the MR-J3-D05 safety logic unit

Point

This connection is for source interfaces. For the other I/O signals, refer to the following connection examples.

☞ Page 53 Example I/O signal connections

Connection example

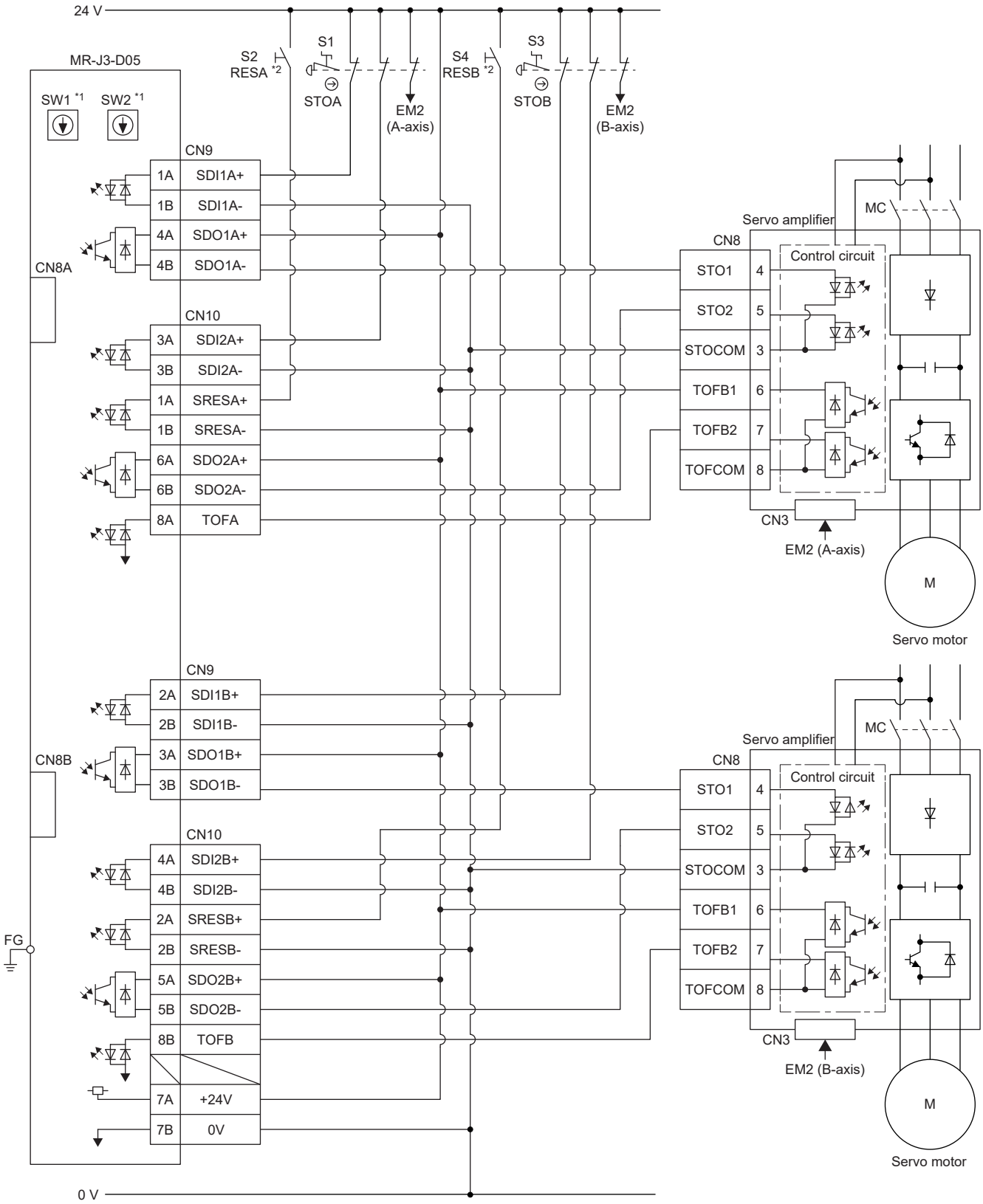

*1 Set a delay time for STO output with SW1 and SW2. These switches are located in a recessed area in the MR-J3-D05 to prevent accidental setting changes.

*2 To release the STO state (base circuit shut-off), turn on RESA and RESB then turn them off.

Basic operation example

The switch input of STOA is output to SDO1A and SDO2A of the MR-J3-D05, and then input to the servo amplifier.
The switch input of STOB is output to SDO1B and SDO2B of the MR-J3-D05, and then input to the servo amplifier.

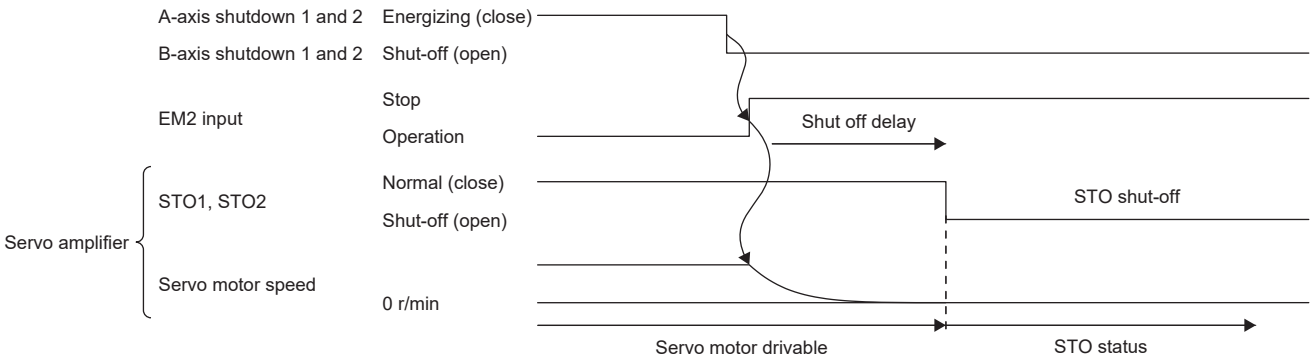

External I/O signal connection example using an external safety relay unit

Point

This connection is for source interfaces. For the other I/O signals, refer to the following connection examples.

☞ Page 53 MR-J5-_G_ (excluding MR-J5-_G_-HS_)
☞ Page 59 MR-J5W_-_G_
☞ Page 62 MR-J5-_B_
☞ Page 65 MR-J5W_-_B_
☞ Page 68 MR-J5-_A_

This connection example complies with the requirements up to ISO/EN ISO 13849-1:2015 Category 3 PL e and IEC/EN IEC 62061 maximum SIL 3.

For details, refer to the safety relay module user's manual.

The safety level depends on the setting values of [Pr. PF18 STO diagnosis error detection time] and [Pr. PSD18_Permissible time for mismatches DI1] and whether STO input diagnosis by TOFB output is performed or not.

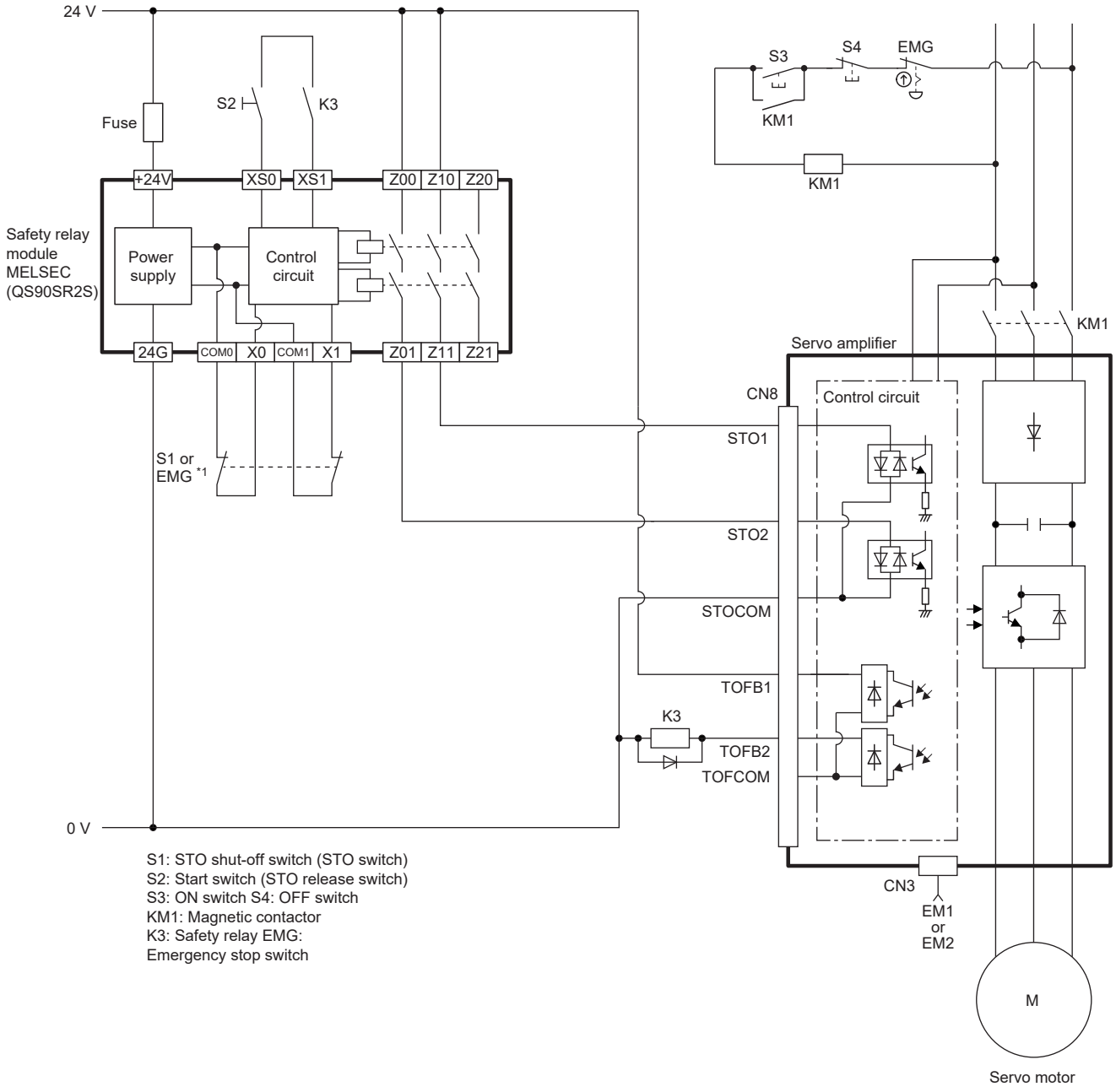

S1: STO shut-off switch (STO switch)
S2: Start switch (STO release switch)
S3: ON switch S4: OFF switch
KM1: Magnetic contactor
K3: Safety relay EMG:
Emergency stop switch

*1 To enable "Emergency switching off" for the shut-off by the STO function of the servo amplifier, change S1 to EMG. The stop category at this time is "0".
☞ Page 452 Precautions for compliance with stop category 1 (IEC/EN 60204-1)

8.4 Detailed explanation of interfaces

The details of I/O signal interfaces stated in the following section (refer to the I/O signal interface type in the table) are as follows. Refer to the section and connect them with external devices.

☞ Page 450 Functional safety I/O signal connector (CN8) and pin assignments

Sink I/O interface

Digital input interface DI-1

This is an input circuit in which the photocoupler cathode side is the input terminal. Transmit signals from a sink (open-collector) type transistor output, relay switch, etc.

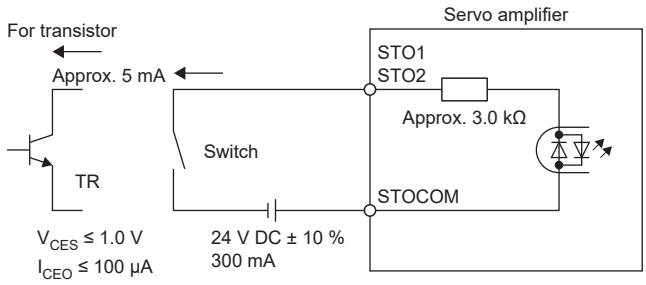

Digital output interface DO-1

This is a circuit in which the collector of the output transistor is the output terminal. When the output transistor is turned on, the current flows to the collector terminal.

A lamp, relay, or photocoupler can be driven. Install a diode (D) for an inductive load, or install an inrush current suppressing resistor (R) for a lamp load.

(Rated current: 40 mA or less, maximum current: 50 mA or less, inrush current: 100 mA or less) A maximum of 5.2 V voltage drop occurs in the servo amplifier.

■When outputting each of two STO states by using each TOFB

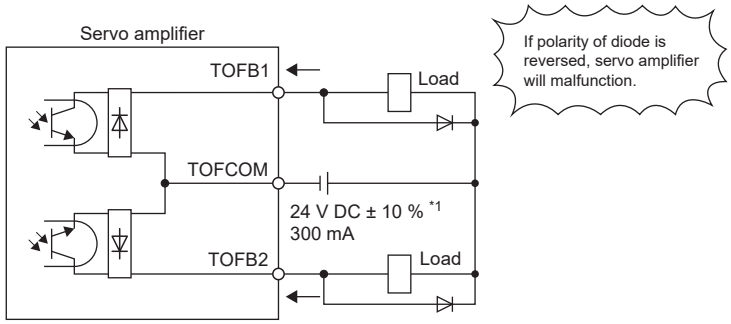

*1 If the voltage drop (a maximum of 2.6 V) interferes with the relay operation, apply high voltage (a maximum of 26.4 V) from an external source.

■When outputting two STO states by using one TOFB

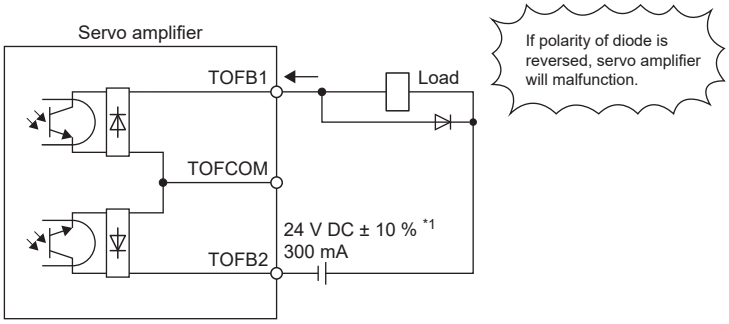

*1 If the voltage drop (a maximum of 5.2 V) interferes with the relay operation, apply high voltage (a maximum of 26.4 V) from an external source.

Source I/O interface

For the servo amplifiers in this manual, source type I/O interfaces can be used.

Digital input interface DI-1

This is an input circuit in which the anode of the photocoupler is the input terminal. Transmit signals from a source (open-collector) type transistor output, relay switch, etc.

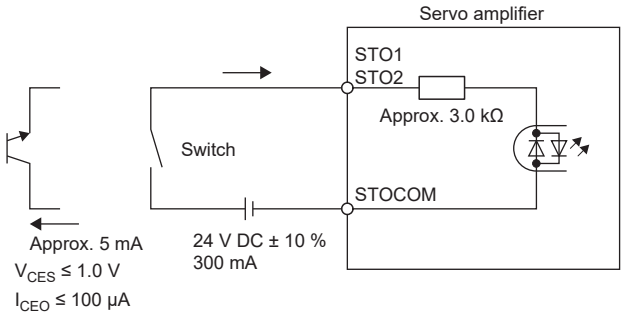

Digital output interface DO-1

This is a circuit in which the emitter of the output transistor is the output terminal. When the output transistor is turned on, the current flows from the output terminal to a load.
A maximum of 5.2 V voltage drop occurs in the servo amplifier.

■When outputting each of two STO states by using each TOFB

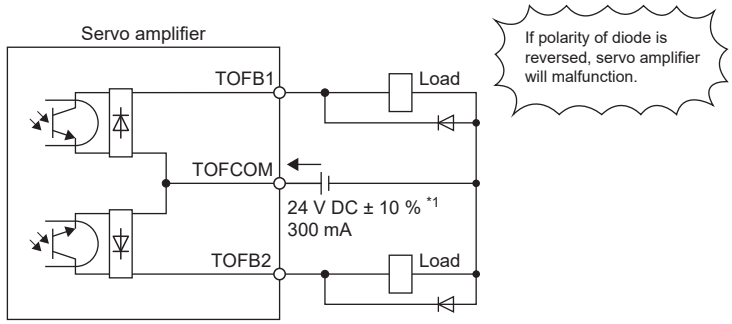

*1 If the voltage drop (a maximum of 2.6 V) interferes with the relay operation, apply high voltage (a maximum of 26.4 V) from an external source.

■When outputting two STO states by using one TOFB

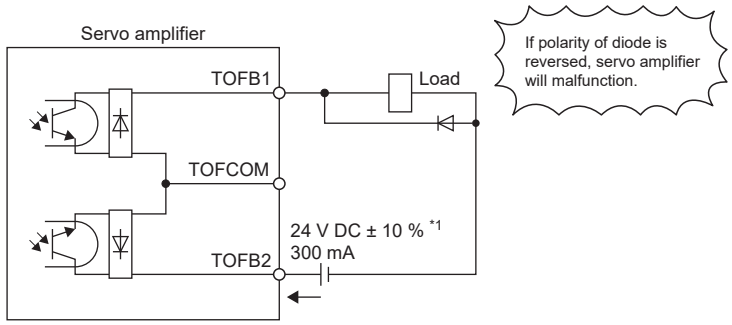

*1 If the voltage drop (a maximum of 5.2 V) interferes with the relay operation, apply high voltage (a maximum of 26.4 V) from an external source.

9 USING FUNCTIONAL SAFETY [G] (EXCULUDING MR-J5-_G_-HS_)

9.1 Introduction

For the setting to use functional safety, refer to Chapter 6 in the following user's manual.

📖MR-J5 User's Manual (Function)

When using the functional safety in the MR-J5-_G_-HS_, refer to the following.

☞ Page 474 USING FUNCTIONAL SAFETY [G] (MR-J5-_G_-HS_)

9.2 Function Block Diagram

The following are examples of the MR-J5-_G_-RJ.

Safety sub-function control by input device

This figure shows a function block configured to allow input devices assigned to the CN8 connector pins to execute safety sub-functions.

The safety level Category 4 PL e, SIL 3 can be achieved with input signal diagnostics.

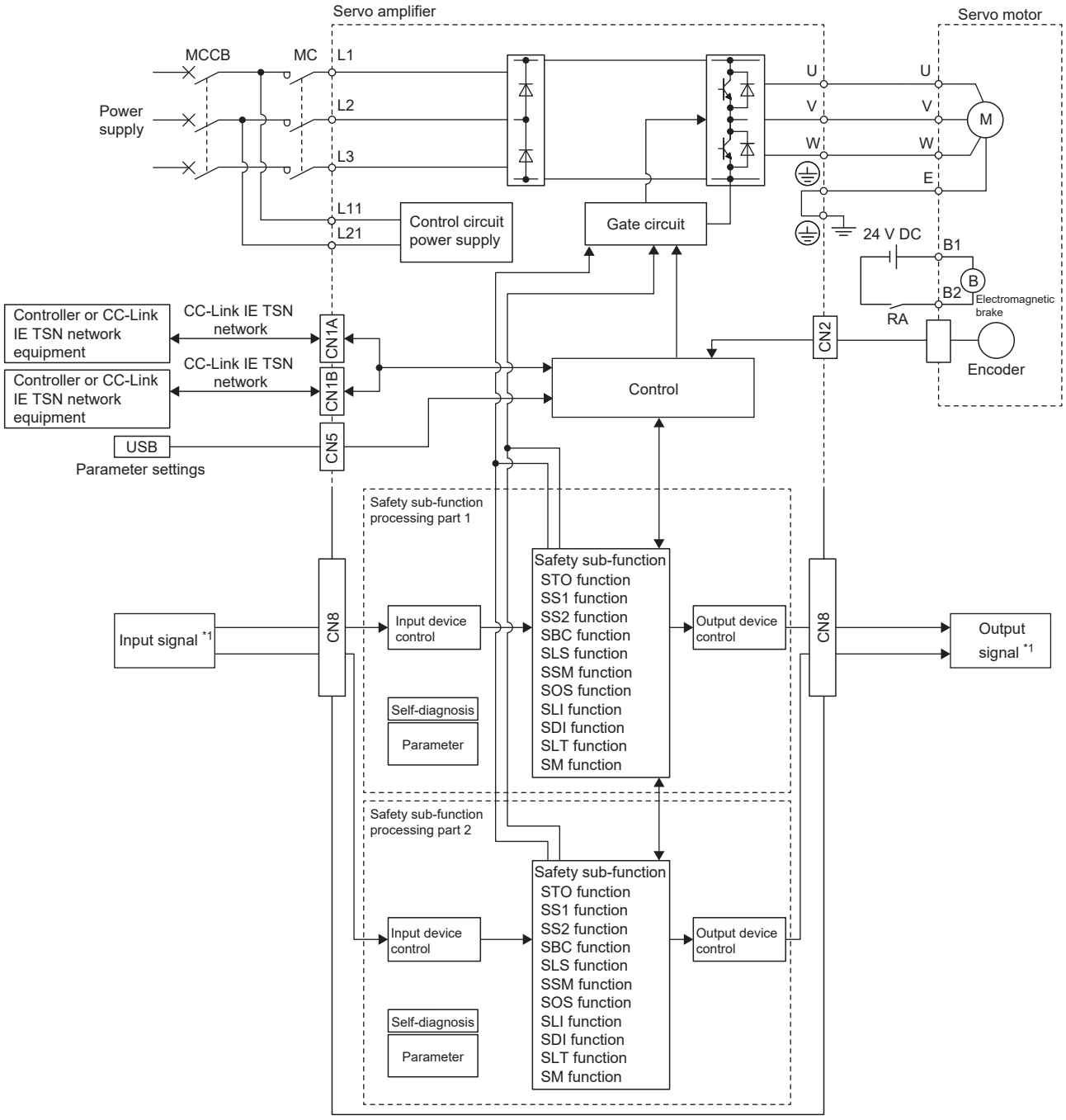

*1 Safety switches, safety relays, etc.

Safety sub-function control by network

This figure shows a function block configured to allow safety sub-functions to be executed via CC-Link IE TSN Network. Wiring can be reduced using this method.

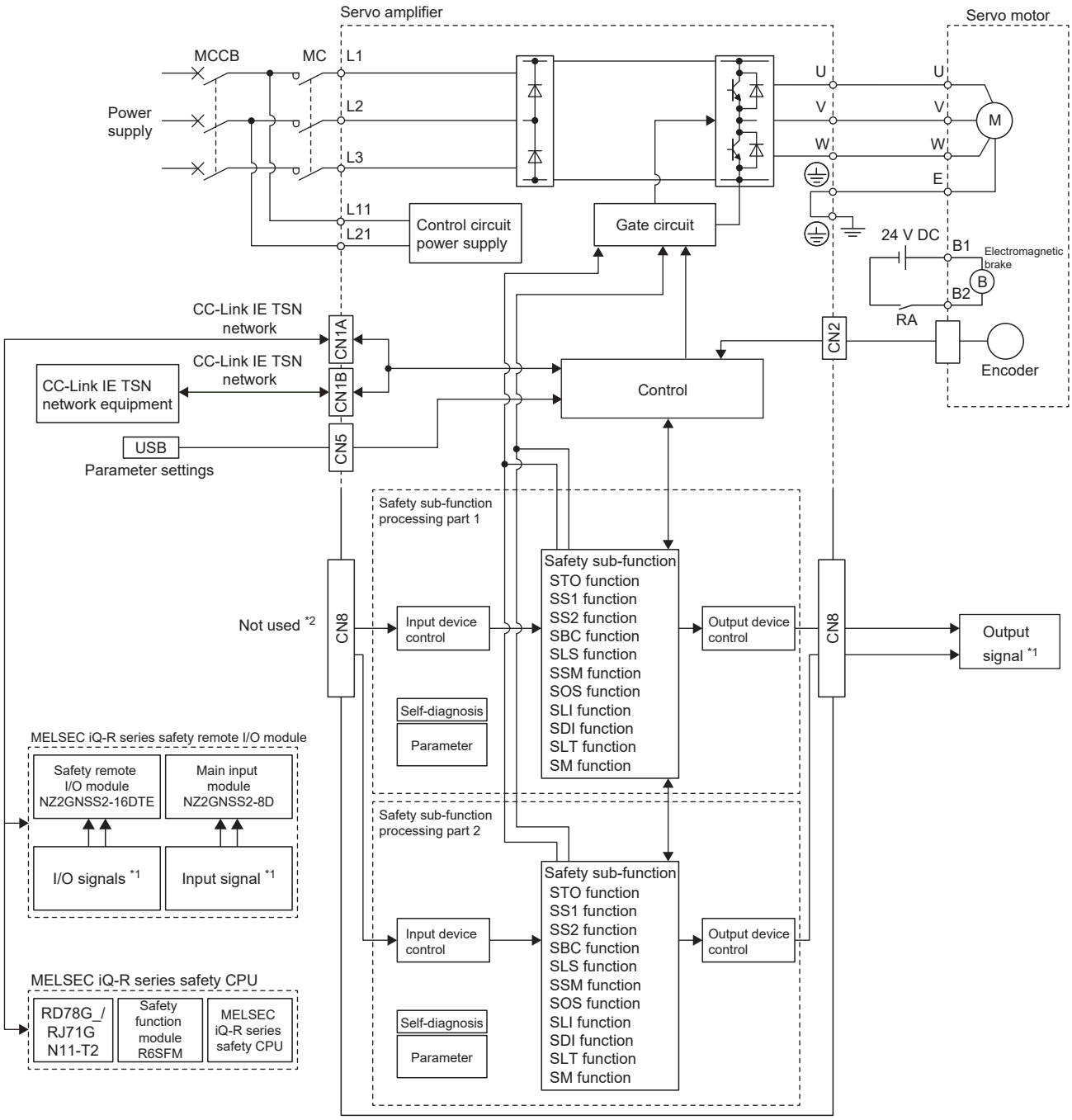

*1 Safety switches, safety relays, etc.

*2 Signal input from CN8 is disabled when the safety sub-functions over a network are used. Wire the block so that signals can be input from a controller. The safety sub-functions can still be used even if a short-circuit connector is connected to CN8. CN8 output signals can also be used.

9.3 System configuration

The following are examples of the MR-J5-_G_-RJ.

Safety sub-function control by input device

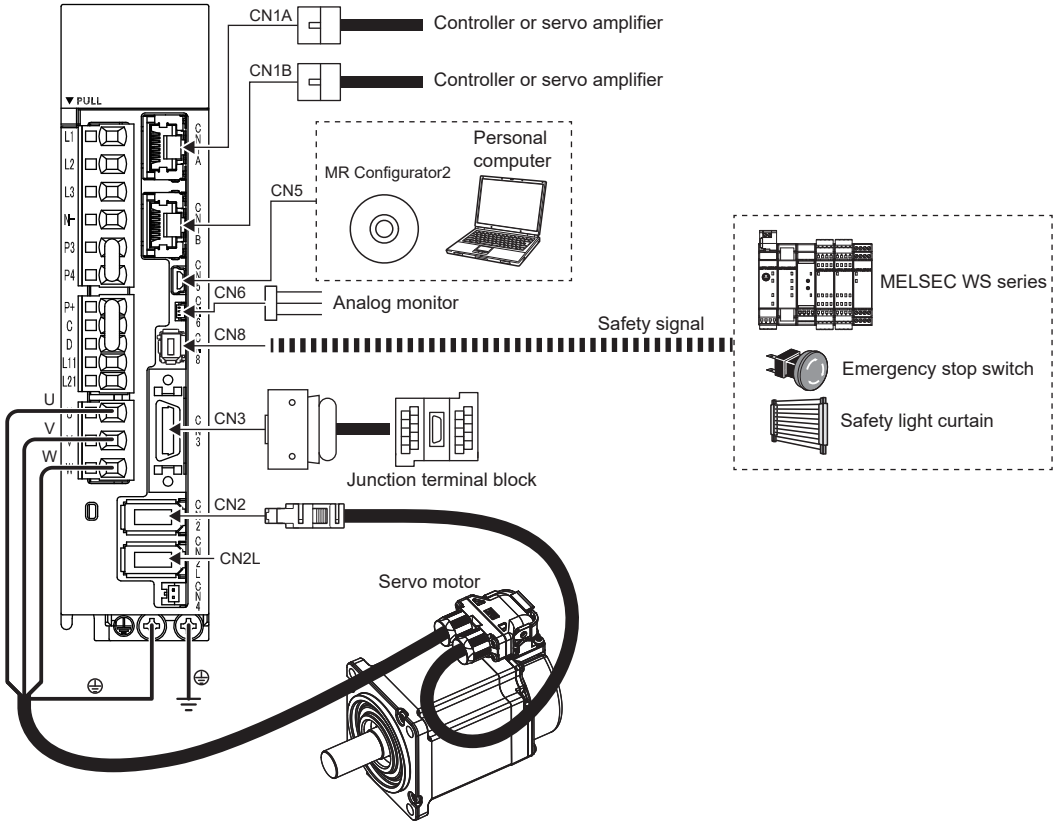

Safety sub-function control by network

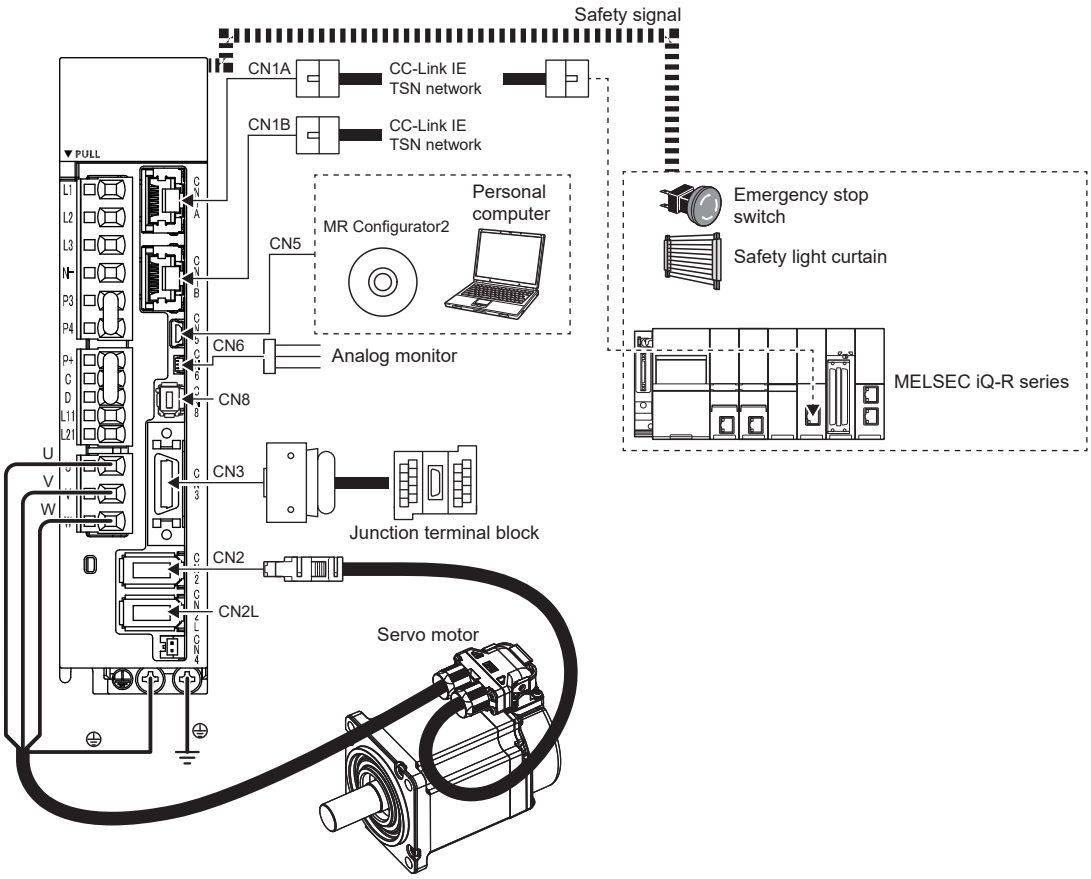

9.4 Specifications

For information on safety sub-function specifications, refer to "Functional safety" in the User's Manual (Introduction).

9.5 Connectors and pin assignments

Point

The pin assignments of the connectors are as viewed from the cable connector wiring section.

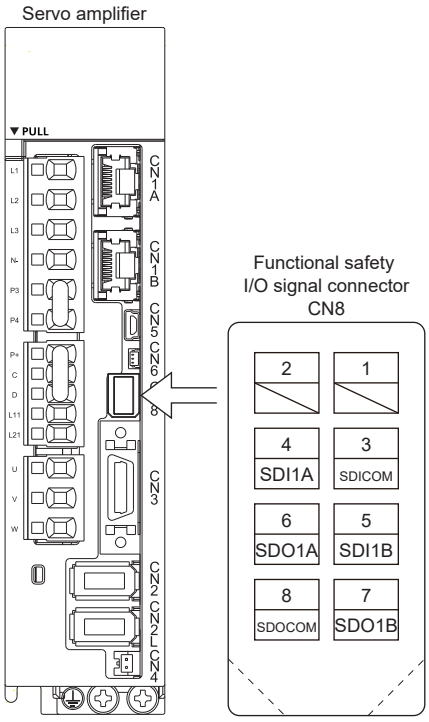

- Signal device explanations

Signal name	Connector pin No.	Description	I/O signal interface type
SDICOM	CN8-3	Common terminal for the SDI1A and SDI1B input signals	DI-1
SDI1A	CN8-4	Input the STO status of SDI1A. Turn off SDI1A: Open between SDI1A and SDICOM. Turn on SDI1A: Close between SDI1A and SDICOM.	DI-1
SDI1B	CN8-5	Input the STO status of SDI1B. Turn off SDI1B: Open between SDI1B and SDICOM. Turn on SDI1B: Close between SDI1B and SDICOM.	DI-1
SDOCOM	CN8-8	Common terminal for the SDO1A and SDO1B output signals	DO-1
SDO1A	CN8-6	This signal outputs the status assigned to SDO1A. SDO1A is on: Closes between SDO1A and SDOCOM. SDO1A is off: Opens between SDO1A and SDOCOM.	DO-1
SDO1B	CN8-7	This signal outputs the status assigned to SDO1B. SDO1B is on: Closes between SDO1B and SDOCOM. SDO1B is off: Opens between SDO1B and SDOCOM.	DO-1

9.6 Example I/O signal connections

This is only a connection example for CN8. Refer to the following for other connection examples.

☞ Page 53 Example I/O signal connections

Input signal

There is a delay of up to 5 ms from input to output.

For source input interface

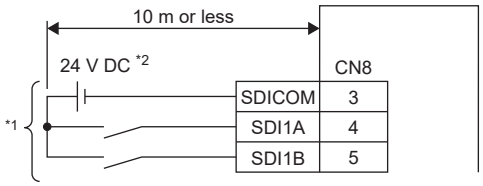

*1 Make double wiring (SDI1A and SDI1B) for the external input wiring.

*2 Supply 24 V DC ± 10 % to interfaces from an external source. If all the I/O points have been used, there must be a total current capacity of 0.2 A remaining. Reducing the number of I/O points decreases the current capacity. Refer to the following for current values. Although the diagram shows the input signal and the output signal each using a separate 24 V DC power supply for illustrative purposes, the system can be configured to use a single 24 V DC power supply.

☞ Page 469 Connecting I/O interfaces

For sink input interface

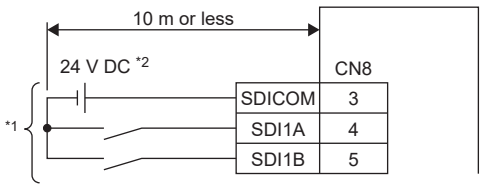

*1 Make double wiring (SDI1A and SDI1B) for the external input wiring.

*2 Supply 24 V DC ± 10 % to interfaces from an external source. If all the I/O points have been used, there must be a total current capacity of 0.2 A remaining. Reducing the number of I/O points decreases the current capacity. Refer to the following for current values. Although the diagram shows the input signal and the output signal each using a separate 24 V DC power supply for illustrative purposes, the system can be configured to use a single 24 V DC power supply.

☞ Page 469 Connecting I/O interfaces

Output signal

For source output interface

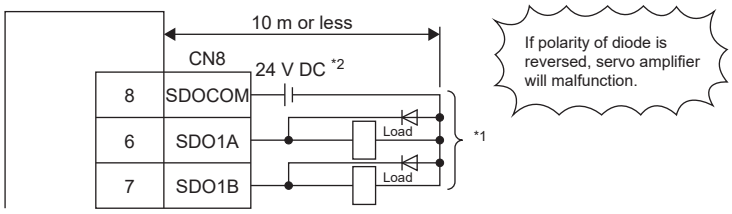

*1 Make double wiring (SDO1A and SDO1B) for the external output wiring.

*2 Supply 24 V DC ± 10 % to interfaces from an external source. If all the I/O points have been used, there must be a total current capacity of 0.2 A remaining. Reducing the number of I/O points decreases the current capacity. Refer to the following for current values. Although the diagram shows the input signal and the output signal each using a separate 24 V DC power supply for illustrative purposes, the system can be configured to use a single 24 V DC power supply.

☞ Page 469 Connecting I/O interfaces

For sink output interface

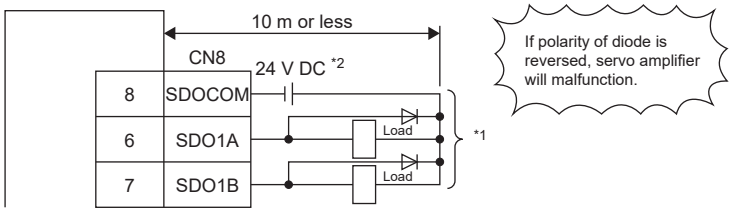

*1 Make double wiring (SDO1A and SDO1B) for the external output wiring.

*2 Supply 24 V DC ± 10 % to interfaces from an external source. If all the I/O points have been used, there must be a total current capacity of 0.2 A remaining. Reducing the number of I/O points decreases the current capacity. Refer to the following for current values. Although the diagram shows the input signal and the output signal each using a separate 24 V DC power supply for illustrative purposes, the system can be configured to use a single 24 V DC power supply.

☞ Page 469 Connecting I/O interfaces

9.7 Connecting I/O interfaces

Refer to this section before connecting I/O interfaces to external devices.

Source input

This is an input circuit in which the anode of the photocoupler is the input terminal. Transmit signals from a source (open-collector) type transistor output, relay switch, etc.

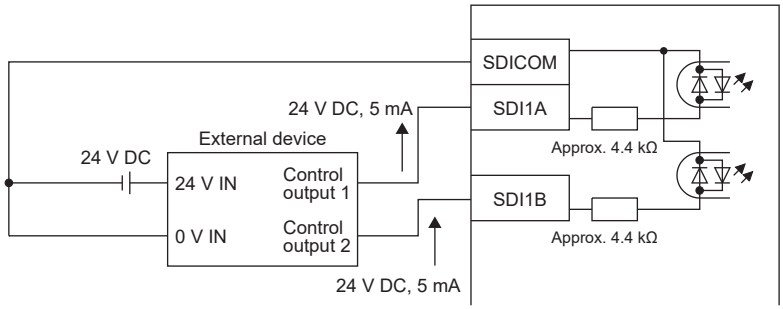

Sink input

This is an input circuit in which the photocoupler cathode side is the input terminal. Transmit signals from a sink (open-collector) type transistor output, relay switch, etc.

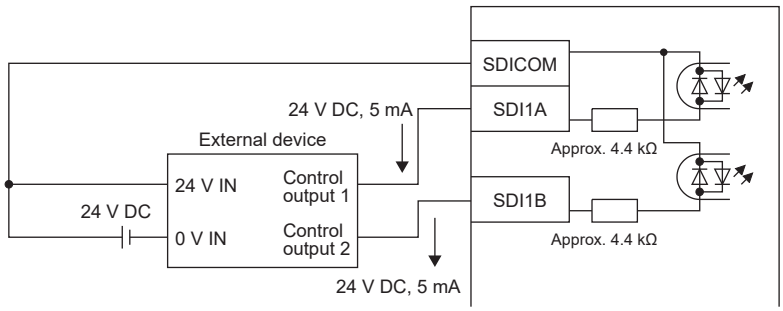

9.8 Wiring the SBC output

Point

This function only guarantees that the power supply for the mechanical brake is correct. It cannot detect brake wear. Check the mechanical brake periodically to ensure it is functioning correctly.

To use SBCS (SBC output), connect it to the electromagnetic brake of the servo motor. Wire the system so that the electromagnetic brake activates when SBCS (SBC output) turns off. There is no need to use the MBR (Electromagnetic brake interlock) of the servo amplifier. For information on the operation sequence when the SBC function is used, refer to "SBC function" in the following manual.

MR-J5 User's Manual (Function)

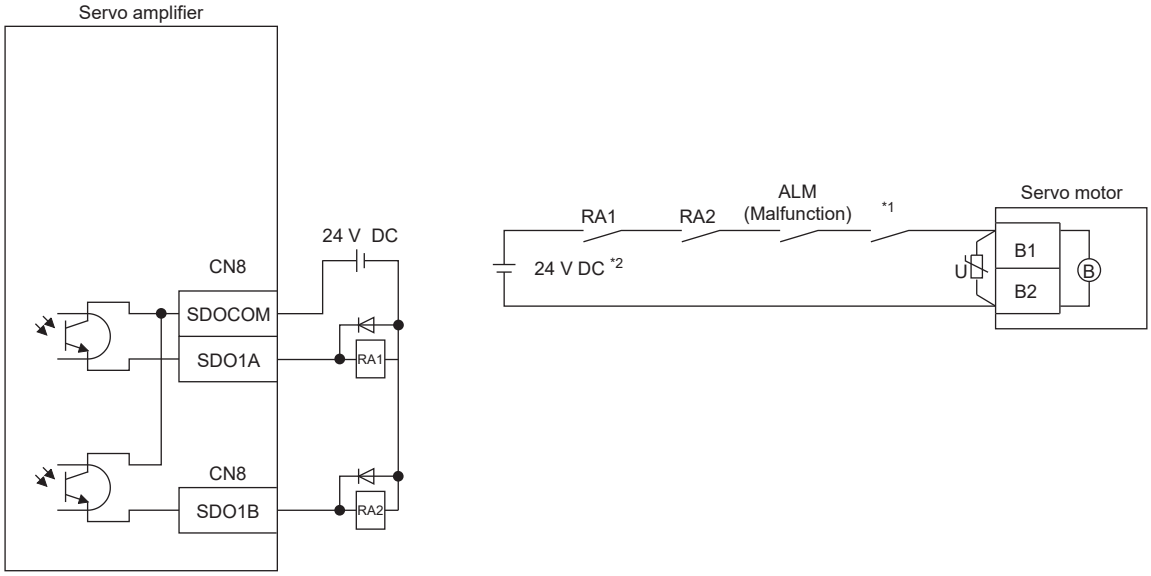

*1 The circuit should be shut off in conjunction with the emergency stop switch.

*2 Do not use the 24 V DC interface power supply for the electromagnetic brake.

9.9 Noise reduction techniques

This section provides information on measures that prevent the servo amplifier malfunctioning when it is installed next to peripheral devices that emit a large amount of noise.

Ground shielded cables close to the servo amplifier. Ensure that the part of the cable before the grounding point does not induce electromagnetic noise to the section of the cable after the grounding point. Strip part of the shielded cable, then ground the exposed portion of the cable on a large surface of the cabinet. A metal cable clamp can also be used to ground the cable (shown below). Mask the painted internal wall of the cabinet that touches the cable clamp.

- Exposed shield

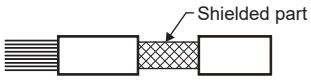

- Grounding the shield

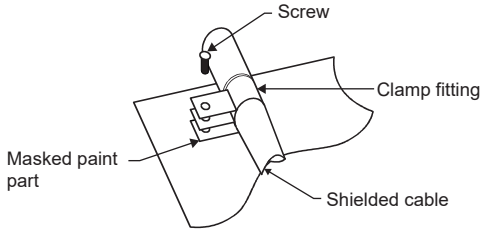

Ground both ends of the CN8 cable with the cable clamp. The shield length from the servo amplifier to the cable clamp should be within 30 cm.

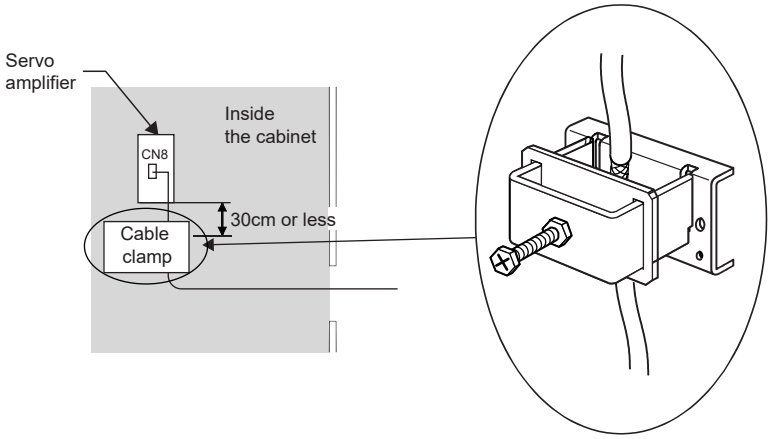

For the MR-J5-500_4-_ and MR-J5-700_4-_, the shield of the I/O signal cable can be grounded using SCC 15-F (Phoenix Contact). Refer to the following for details.

☞ Page 410 SCC 15-F Shield connection clamp

9.10 Example of connection with other devices

The following are examples of the MR-J5-_G_-RJ.

Safety sub-function control by input device

This figure shows the connection that allows execution of safety sub-functions from the safety controller using the input device assigned to pins of the CN8 connector.

The safety level Category 4 PL e, SIL 3 can be achieved with input signal diagnostics.

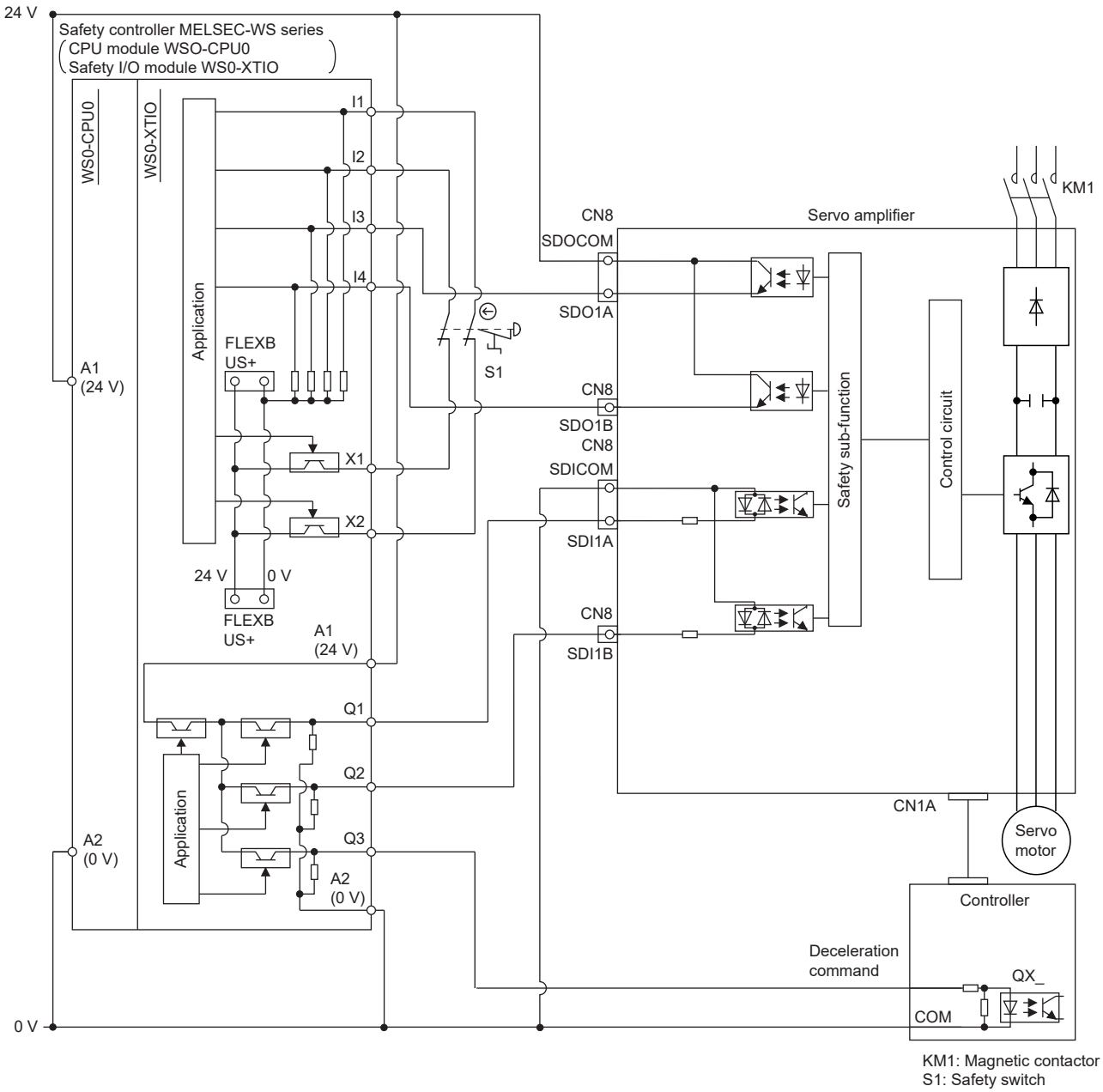

Safety sub-function control by network

This figure shows connection that allows execution of safety sub-functions via CC-Link IE TSN Network.
Wiring can be reduced using this method.

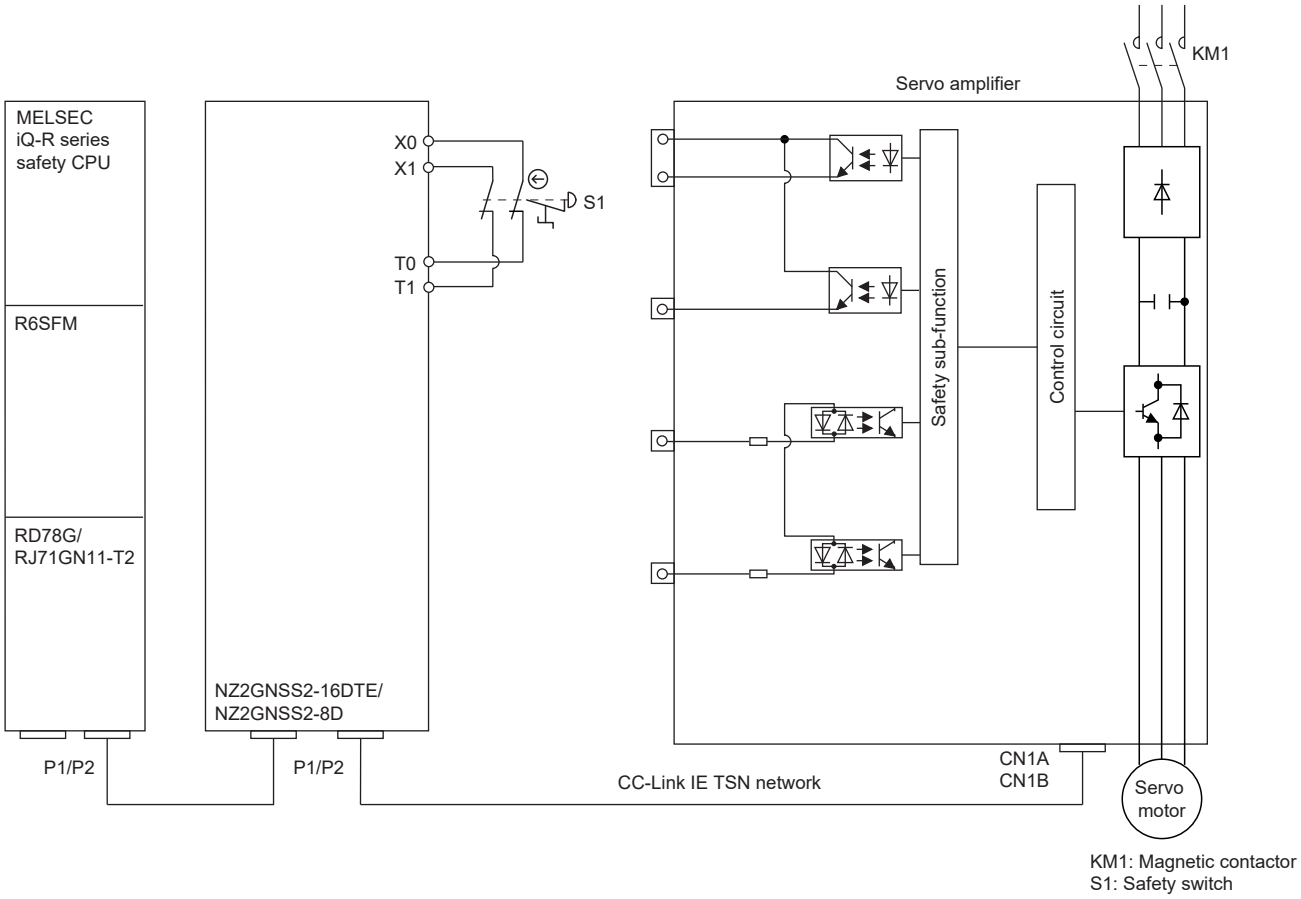

10 USING FUNCTIONAL SAFETY [G] (MR-J5-_G_-HS_)

Point

Functional safety is not available for the MR-J5-_G_-HS_ in the default state.
When using the functional safety, refer to the following manual and set the functional safety parameters.
MR-J5 User's Manual (Function)

10.1 Introduction

For the setting to use functional safety, refer to Chapter 6 in the following user's manual.
MR-J5 User's Manual (Function)

10.2 Function block diagram

Safety sub-function control by input device

This figure shows a function block configured to allow input devices assigned to the CN3 connector pins to execute safety sub-functions.

The safety level Category 4 PL e, SIL 3 can be achieved with input signal diagnostics.

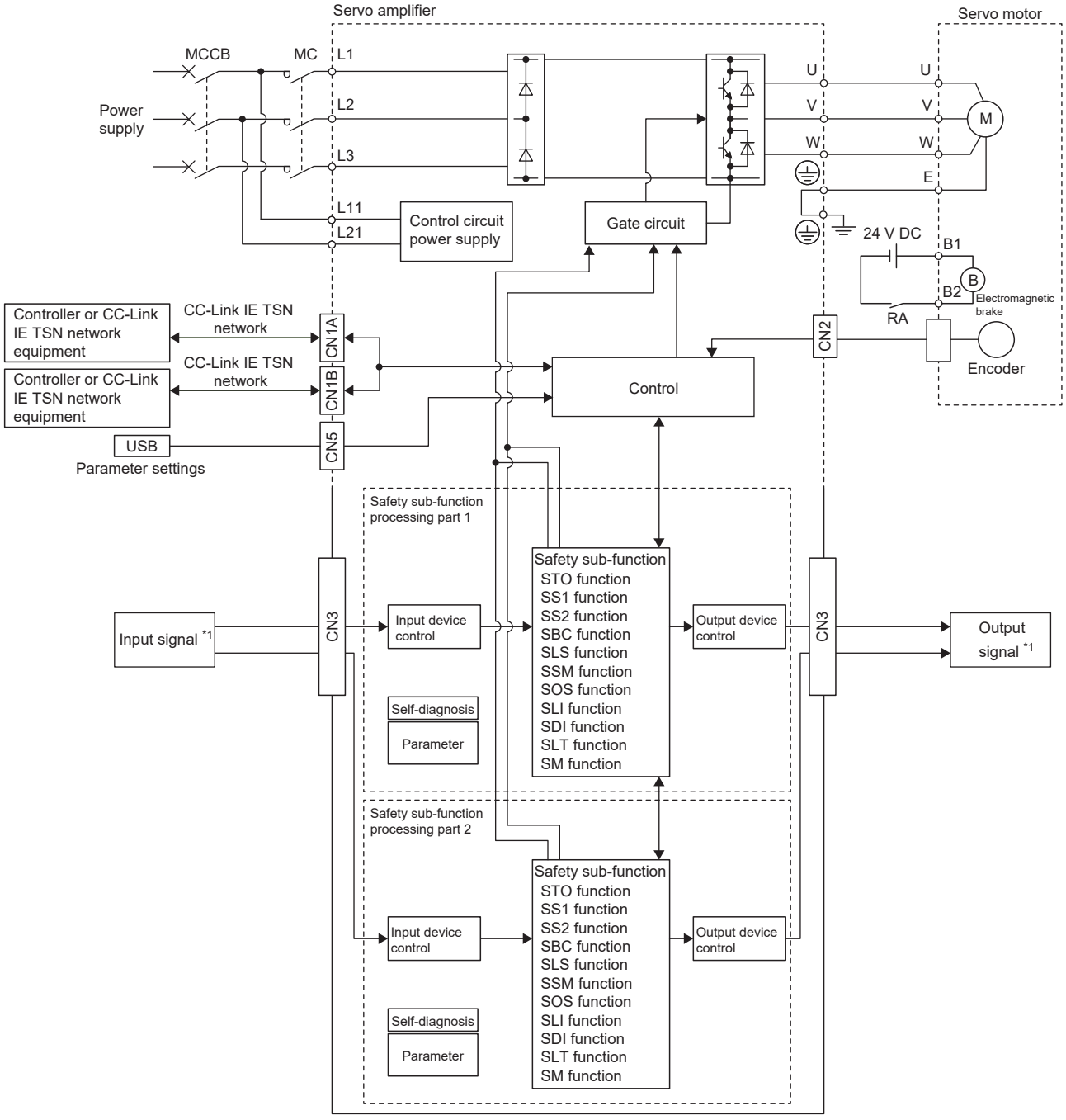

*1 Safety switches, safety relays, etc.

Safety sub-function control by network

This figure shows a function block configured to allow safety sub-functions to be executed via CC-Link IE TSN Network. Wiring can be reduced using this method.

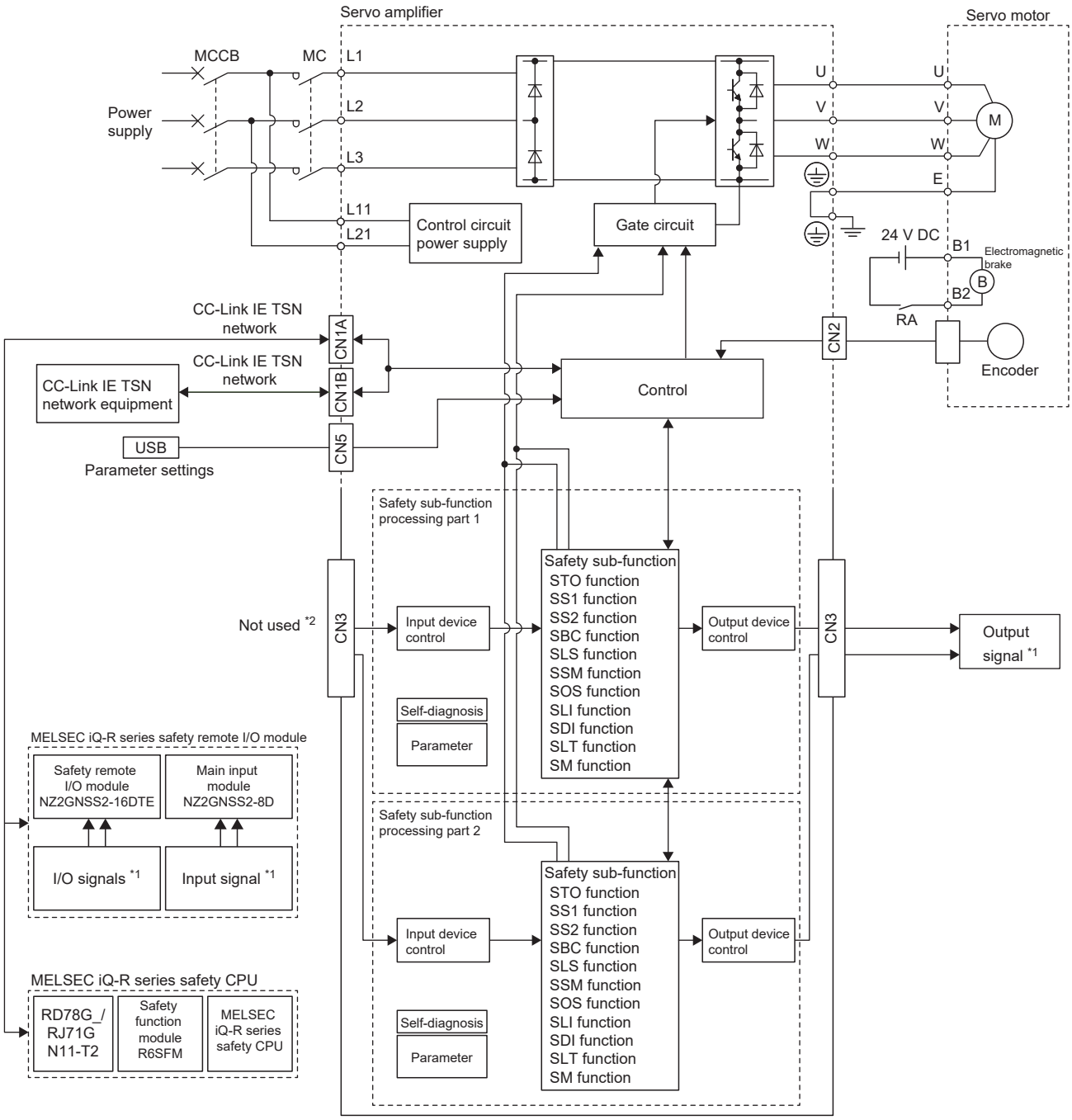

*1 Safety switches, safety relays, etc.

*2 Signal input from CN3 is disabled when using the safety sub-functions over a network. Wire the block so that signals can be input from a controller. CN3 output signals can be used.

10.3 System configuration

Safety sub-function control by input device

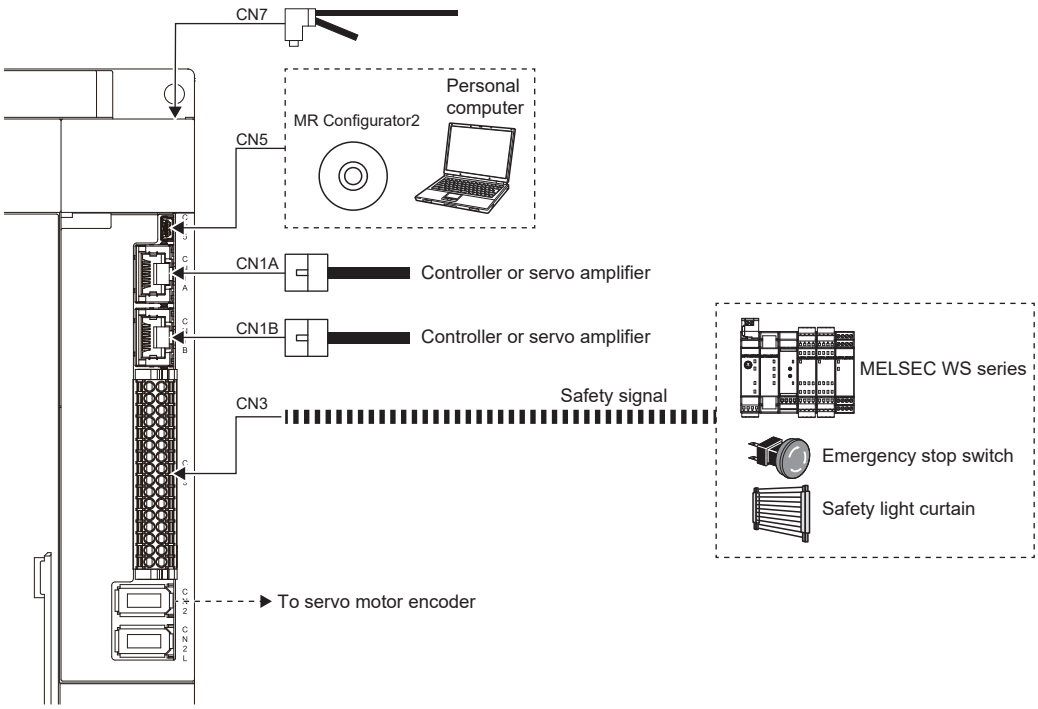

Safety sub-function control by network

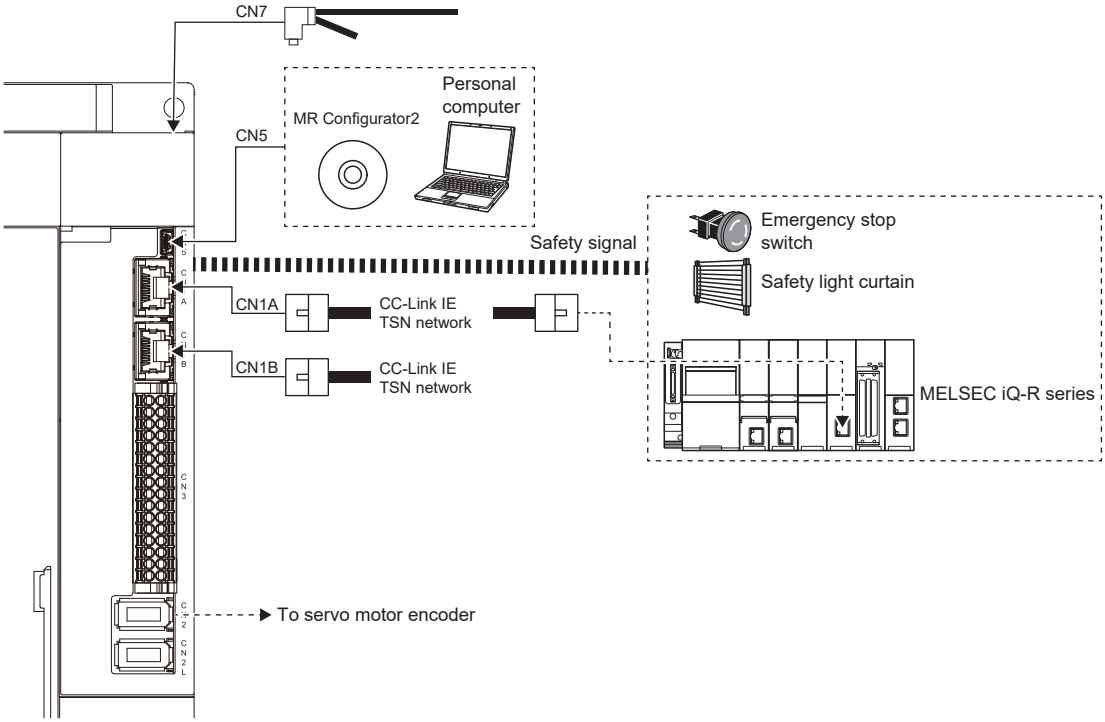

10.4 Specifications

For information on safety sub-function specifications, refer to "Functional safety" in the User's Manual (Introduction).

10.5 Connectors and pin assignments

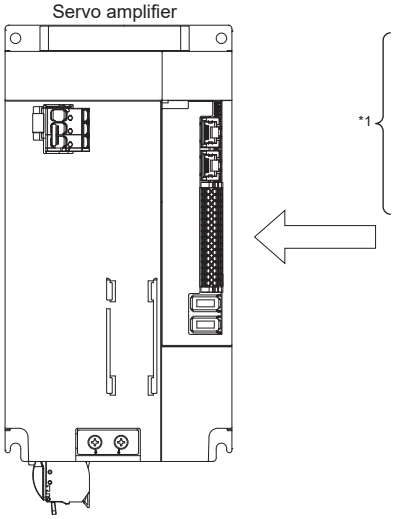

CN3

Pin No.	Symbol	Symbol	Pin No.
1A	DOCOM	MBR	1B
2A	INP	ALM	2B
3A	DICOM	EM2	3B
4A	TPR1	TPR2	4B
5A	LSP	LSN	5B
6A	DICOM	DOG	6B
7A	-	-	7B
8A	SDI1A	SDI1B	8B
9A	SDICOMA	SDICOMB	9B
10A	SDO24VA	SDO24VB	10B
11A	SDO1A	SDO1B	11B
12A	SDI2A	SDI2B	12B
13A	SDI3A	SDI3B	13B
14A	SDO2A	SDO2B	14B
15A	SDO3PA/PLSPA	SDO3PB/PLSPB	15B
16A	SDO3NA/PLSNA	SDO3NB/PLSNB	16B

*1 For details on these I/O signals, refer to the following.
☞ Page 88 Connectors and pin assignments [G]

- Signal device explanations

Signal name	Connector pin No.	Description	I/O signal interface type
SDICOMA	CN3-9A	Common terminal for the SDI1A, SDI2A, and SDI3A input signals	SDI-2
SDICOMB	CN3-9B	Common terminal for the SDI1B, SDI2B, and SDI3B input signals	SDI-2
SDI1A	CN3-8A	Input the status of SDI1A.	SDI-2
SDI2A	CN3-12A	Input the status of SDI2A.	SDI-2
SDI3A	CN3-13A	Input the status of SDI3A.	SDI-2
SDI1B	CN3-8B	Input the status of SDI1B.	SDI-2
SDI2B	CN3-12B	Input the status of SDI2B.	SDI-2
SDI3B	CN3-13B	Input the status of SDI3B.	SDI-2
SDO24VA	CN3-10A	Common terminal for the SDO1A and SDO2A output signals Connect the positive side of the 24 V DC power supply.	SDO-2
SDO24VB	CN3-10B	Common terminal for the SDO1B and SDO2B output signals Connect the positive side of the 24 V DC power supply.	SDO-2
SDO1A	CN3-11A	This signal outputs the status assigned to SDO1A. Connect the negative side of the 24 V DC power supply.	SDO-2
SDO2A	CN3-14A	This signal outputs the status assigned to SDO2A. Connect the negative side of the 24 V DC power supply.	SDO-2
SDO1B	CN3-11B	This signal outputs the status assigned to SDO1B. Connect the negative side of the 24 V DC power supply.	SDO-2
SDO2B	CN3-14B	This signal outputs the status assigned to SDO2B. Connect the negative side of the 24 V DC power supply.	SDO-2
SDO3PA/PLSPA	CN3-15A	Terminal for both SDO3A output and test pulse output Connect the positive side of the 24 V DC power supply.	SDO-3
SDO3NA/PLSNA	CN3-16A	Terminal for both SDO3A output and test pulse output Connect the negative side of the 24 V DC power supply.	SDO-3
SDO3PB/PLSPB	CN3-15B	Terminal for both SDO3B output and test pulse output Connect the positive side of the 24 V DC power supply.	SDO-3
SDO3NB/PLSNB	CN3-16B	Terminal for both SDO3B output and test pulse output Connect the negative side of the 24 V DC power supply.	SDO-3

10.6 Example I/O signal connections

The following shows only the connection examples related to functional safety. Refer to the following for other connection examples.

☞ Page 53 Example I/O signal connections

Input signal

There is a delay of up to 5 ms from input to output.

When the external device uses the source output (positive common, PNP transistor output, etc.)

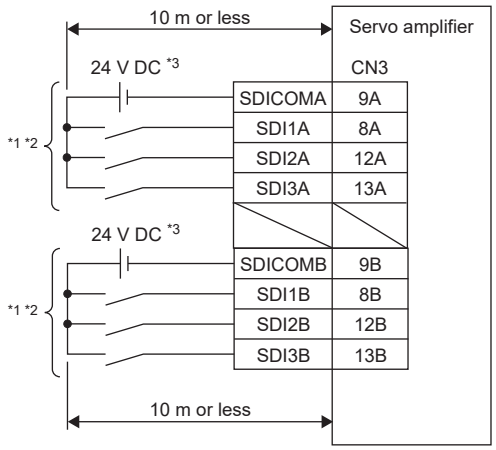

*1 Make double wiring (SDI1A/SDI2A/SDI3A, SDI1B/SDI2B/SDI3B) for the external input wiring.

*2 Assign each input device to the connector pin of the combinations shown in the following table.

Combination	A-system	B-system	Device details
Safety input 1	SDI1A (CN3-8A)	SDI1B (CN3-8B)	☞ Page 483 Connecting safety I/O interfaces
Safety input 2	SDI2A (CN3-12A)	SDI2B (CN3-12B)	☞ Page 483 Connecting safety I/O interfaces
Safety input 3	SDI3A (CN3-13A)	SDI3B (CN3-13B)	☞ Page 483 Connecting safety I/O interfaces

*3 Supply 24 V DC ± 10 % to safety input signals from an external source. If all the I/O points have been used, there must be a total current capacity of 0.6 A remaining. Reducing the number of I/O points decreases the current capacity. Refer to the following for current values. Although the diagram shows the safety input signal and the safety output signal each using a separate 24 V DC power supply for illustrative purposes, the system can be configured to use a single 24 V DC power supply.
☞ Page 483 Connecting safety I/O interfaces

When the external device uses the sink output (negative common, NPN transistor output, etc.)

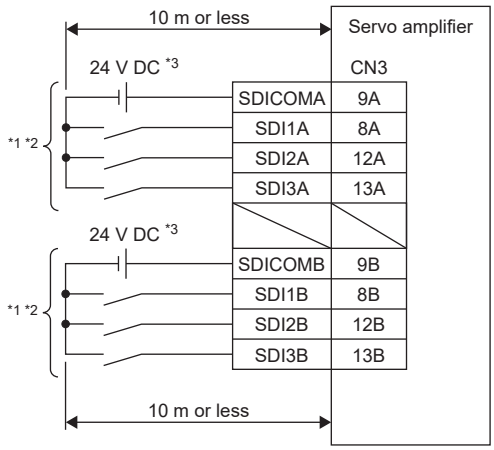

*1 Make double wiring (SDI1A/SDI2A/SDI3A, SDI1B/SDI2B/SDI3B) for the external input wiring.

*2 Assign each input device to the connector pin of the combinations shown in the following table.

Combination	A-system	B-system	Device details
Safety input 1	SDI1A (CN3-8A)	SDI1B (CN3-8B)	☞ Page 483 Connecting safety I/O interfaces
Safety input 2	SDI2A (CN3-12A)	SDI2B (CN3-12B)	☞ Page 483 Connecting safety I/O interfaces
Safety input 3	SDI3A (CN3-13A)	SDI3B (CN3-13B)	☞ Page 483 Connecting safety I/O interfaces

*3 Supply 24 V DC ± 10 % to safety input signals from an external source. If all the I/O points have been used, there must be a total current capacity of 0.6 A remaining. Reducing the number of I/O points decreases the current capacity. Refer to the following for current values. Although the diagram shows the safety input signal and the safety output signal each using a separate 24 V DC power supply for illustrative purposes, the system can be configured to use a single 24 V DC power supply.
☞ Page 483 Connecting safety I/O interfaces

Output signal

SDO3PA/SDO3NA and SDO3PB/SDO3NB support both source and sink outputs. Different output methods can also be used in combination, such as SDO3NA as a source output and SDO3PB as a sink output. Refer to the following for details.
☞ Page 488 Source/sink output

For source output

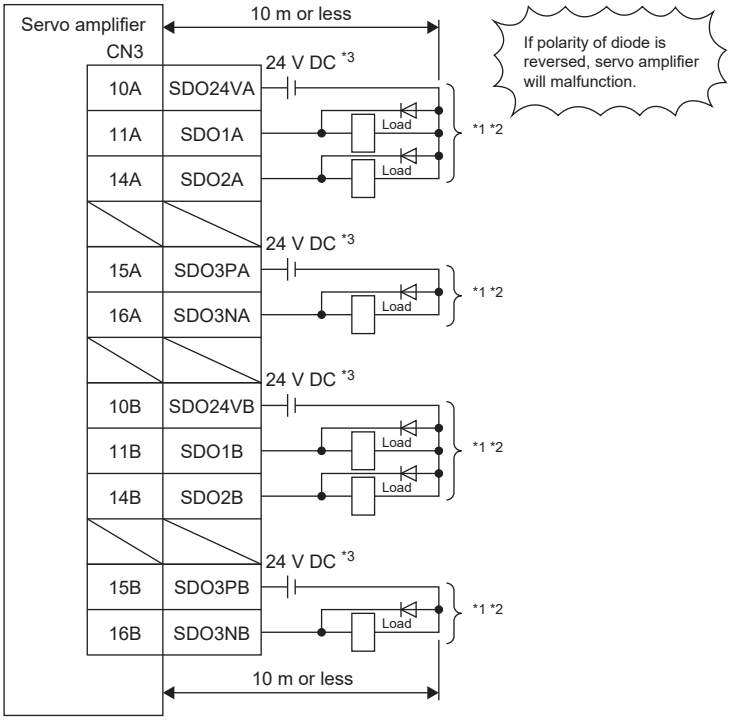

*1 Make double wiring (SDO1A/SDO2A/SDO3PA/SDO3NA, SDO1B/SDO2B/SDO3PB/SDO3NB) for the external output wiring.
*2 Assign each output device to the connector pin of the combinations shown in the following table.

Combination	A-system	B-system	Device details
Safety output 1	SDO1A (CN3-11A)	SDO1B (CN3-11B)	☞ Page 483 Connecting safety I/O interfaces
Safety output 2	SDO2A (CN3-14A)	SDO2B (CN3-14B)	☞ Page 483 Connecting safety I/O interfaces
Safety output 3	SDO3NA (CN3-16A)	SDO3NB (CN3-16B)	☞ Page 483 Connecting safety I/O interfaces

*3 Supply 24 V DC ± 10 % to safety output signals from an external source. If all the I/O points have been used, there must be a total current capacity of 0.6 A remaining. Reducing the number of I/O points decreases the current capacity. Refer to the following for current values. Although the diagram shows the safety input signal and the safety output signal each using a separate 24 V DC power supply for illustrative purposes, the system can be configured to use a single 24 V DC power supply.
☞ Page 483 Connecting safety I/O interfaces

For sink output

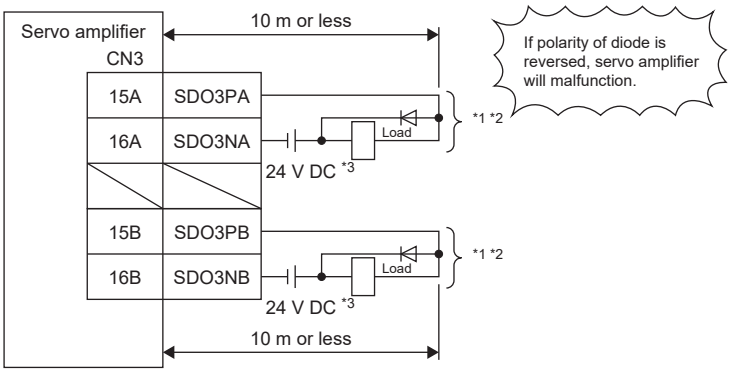

*1 Make double wiring (SDO3PA/SDO3NA, SDO3PB/SDO3NB) for the external output wiring.

*2 Assign each output device to the connector pin of the combinations shown in the following table.

Combination	A-system	B-system	Device details
Safety output 3	SDO3NA (CN3-16A)	SDO3NB (CN3-16B)	☞ Page 483 Connecting safety I/O interfaces

*3 Supply 24 V DC ± 10 % to safety output signals from an external source. If all the I/O points have been used, there must be a total current capacity of 0.6 A remaining. Reducing the number of I/O points decreases the current capacity. Refer to the following for current values. Although the diagram shows the safety input signal and the safety output signal each using a separate 24 V DC power supply for illustrative purposes, the system can be configured to use a single 24 V DC power supply.
☞ Page 483 Connecting safety I/O interfaces

10.7 Connecting safety I/O interfaces

Refer to this section before connecting I/O interfaces to external devices.

Source input

This is an input circuit in which the anode of the photocoupler is the input terminal. Transmit signals from a source (open-collector) type transistor output, relay switch, etc.

The wiring differs depending on the device to be connected and whether the test pulse diagnosis is performed. For the test pulse diagnosis, refer to "FUNCTIONAL SAFETY" in the following manual. (Rated current: 5 mA, maximum current: 10 mA)

MR-J5 User's Manual (Function)

Connecting an external device

Connect the output signals of the external device to SDI_ _.

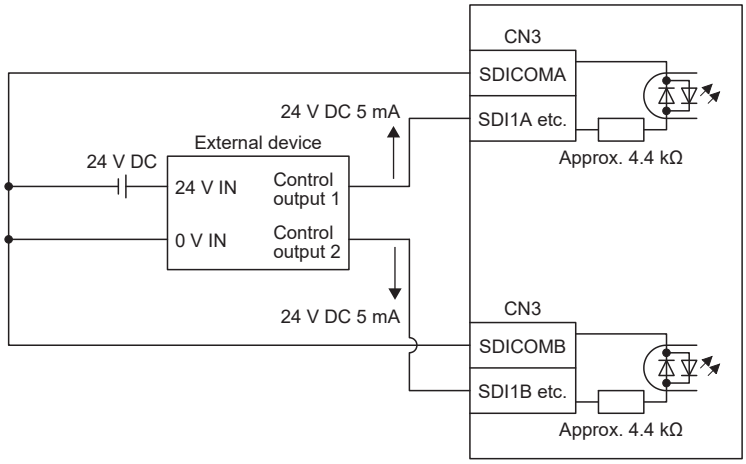

Connecting a switch (When the test pulse diagnosis is not performed)

Perform wiring without using PLS_A and PLS_B.

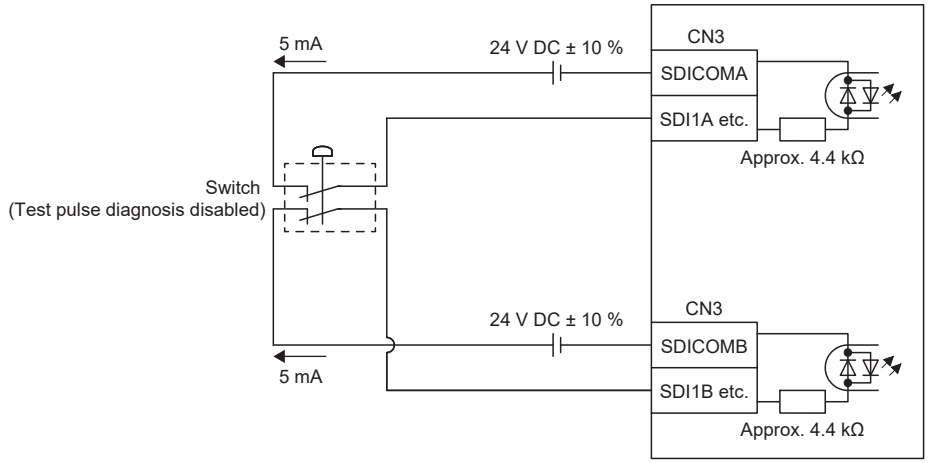

Connecting a switch (When the test pulse diagnosis is performed)

Diagnosis pulses are output from PLSNA and PLSNB. Perform wiring so that the pulse signals output from PLSNA and PLSNB pass through the switch. Since PLSPA/PLSNA and PLSPB/PLSNB share the terminals with SDO3PA/SDO3NA and SDO3PB/SDO3NB, respectively, the test pulse diagnosis cannot be used together with SDO3PA/SDO3NA and SDO3PB/SDO3NB.

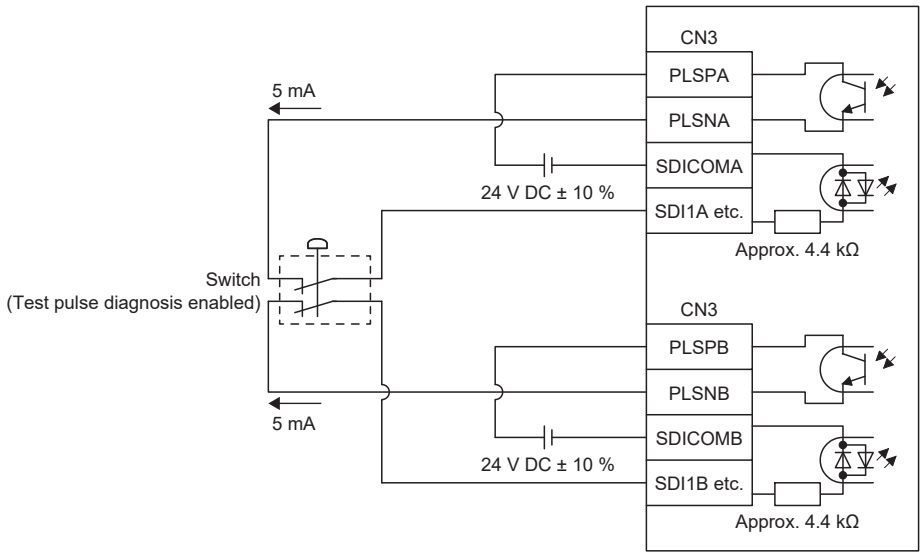

Sink input

This is an input circuit in which the photocoupler cathode side is the input terminal. Transmit signals from a sink (open-collector) type transistor output, relay switch, etc.

The wiring differs depending on the device to be connected and whether the test pulse diagnosis is performed. For the test pulse diagnosis, refer to "FUNCTIONAL SAFETY" in the following manual. (Rated current: 5 mA, maximum current: 10 mA)

MR-J5 User's Manual (Function)

Connecting an external device

Connect the output signals of the external device to SDI_ _.

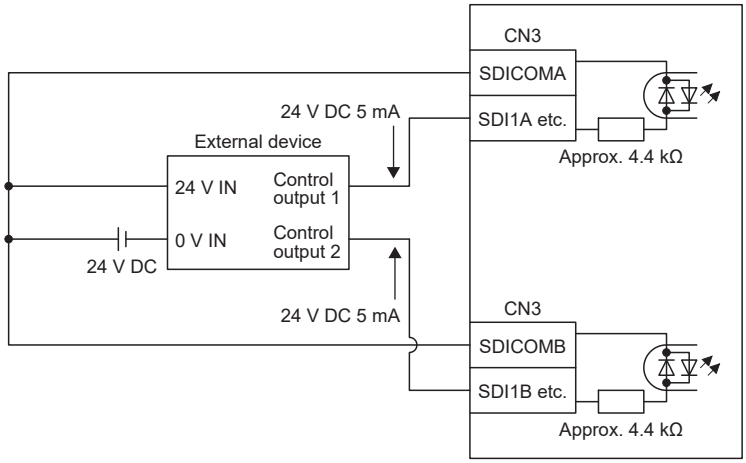

Connecting a switch (When the test pulse diagnosis is not performed)

Perform wiring without using PLS_A and PLS_B.

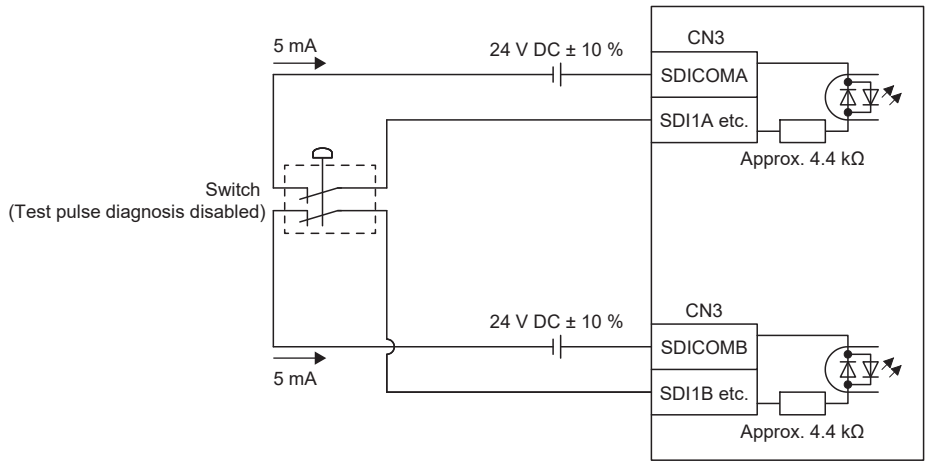

Connecting a switch (When the test pulse diagnosis is performed)

Diagnosis pulses are output from PLSNA and PLSNB. Perform wiring so that the pulse signals output from PLSNA and PLSNB pass through the switch. Since PLSPA/PLSNA and PLSPB/PLSNB share the terminals with SDO3PA/SDO3NA and SDO3PB/SDO3NB, respectively, the test pulse diagnosis cannot be used together with SDO3PA/SDO3NA and SDO3PB/SDO3NB.

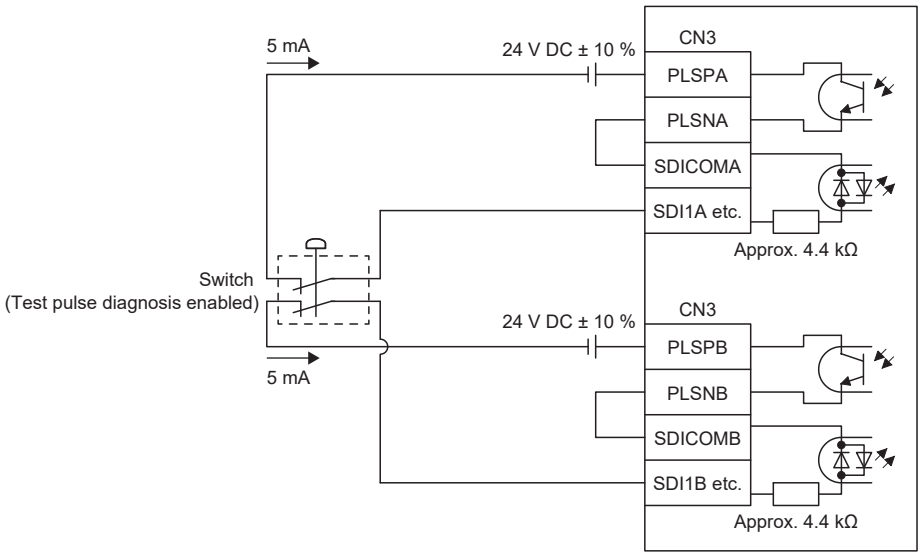

Source output

When the output transistor is turned on, the current flows from the output terminal to a load using SDO24V_ as a positive common.

A lamp, relay, or photocoupler can be driven. Connect a diode to the path for an inductive load, or connect an inrush resistor suppression resistor to the path for a lamp load. (Rated current 5 mA to 40 mA, maximum current 50 mA, inrush current 100 mA)

A voltage drop of 2.4 V occurs in the MR-J5-_G_-HS_.

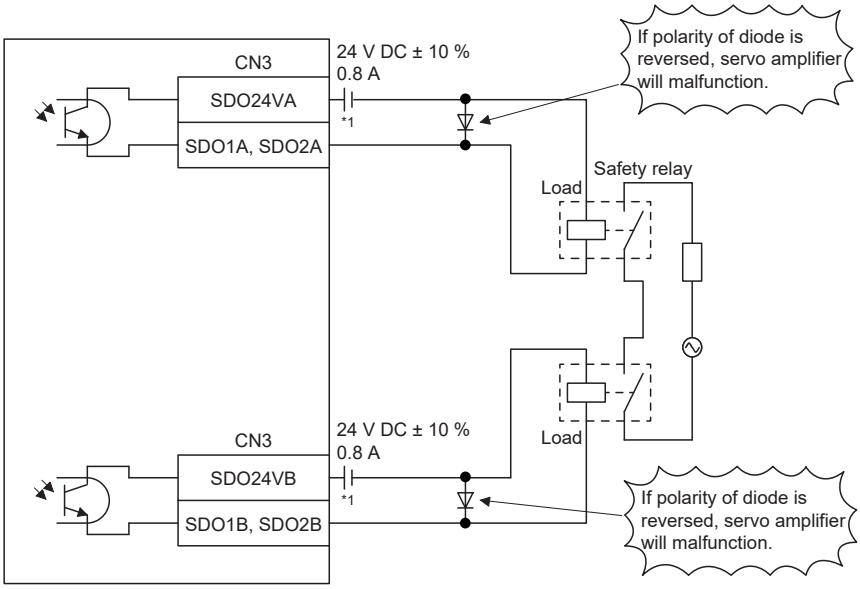

*1 Incorrect polarity of the power supply causes malfunction of the safety relay.

Source/sink output

For SDO3PA/SDO3NA and SDO3PB/SDO3NB, different output methods can also be used in combination in A-system and B-system, such as SDO3NA as a source output and SDO3PB as a sink output. SDO3N_ is the source output type (when the output transistor is turned on, the current flows from the output terminal to a load). SDO3P_ is the sink output type (when the output transistor is turned on, the current flows from a load to the output terminal).

A lamp, relay, or photocoupler can be driven. Connect a diode to the path for an inductive load, or connect an inrush resistor suppression resistor to the path for a lamp load. (Rated current 5 mA to 40 mA, maximum current 50 mA, inrush current 100 mA)

A voltage drop of 2.4 V occurs in the MR-J5-_G_-HS_.

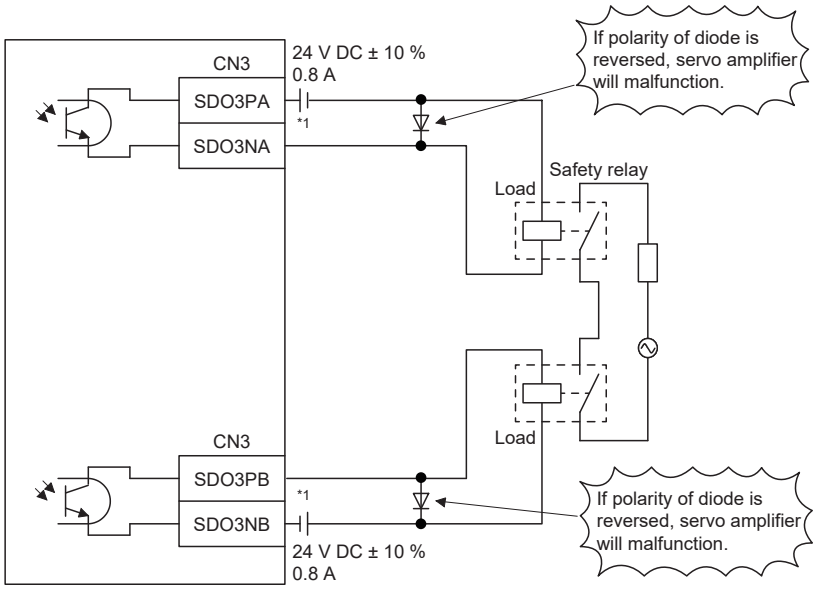

*1 Incorrect polarity of the power supply causes malfunction of the safety relay.

10.8 Wiring the SBC output

Point

This function only guarantees that the power supply for the mechanical brake is correct. It cannot detect brake wear. Check the mechanical brake periodically to ensure it is functioning correctly.

To use SBCS (SBC output), connect it to the electromagnetic brake of the servo motor. Wire the system so that the electromagnetic brake activates when SBCS (SBC output) turns off. There is no need to use the MBR (Electromagnetic brake interlock) of the servo amplifier. For information on the operation sequence when the SBC function is used, refer to "SBC function" in the following manual.

MR-J5 User's Manual (Function)

Using SDO1_ and SDO2_ for SBCS

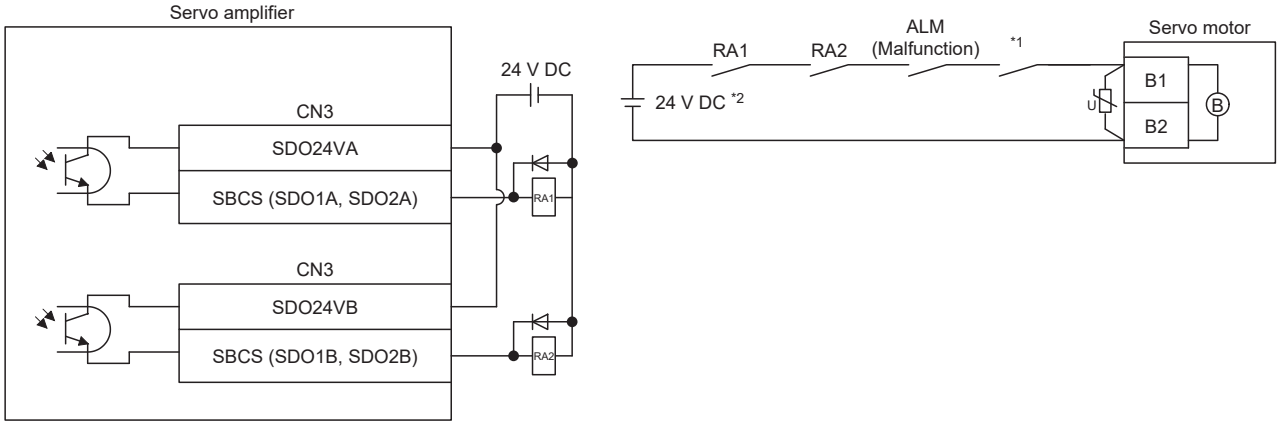

*1 The circuit should be shut off in conjunction with the emergency stop switch.
*2 Do not use the 24 V DC interface power supply for the electromagnetic brake.

Using SDO3_ for SBCS

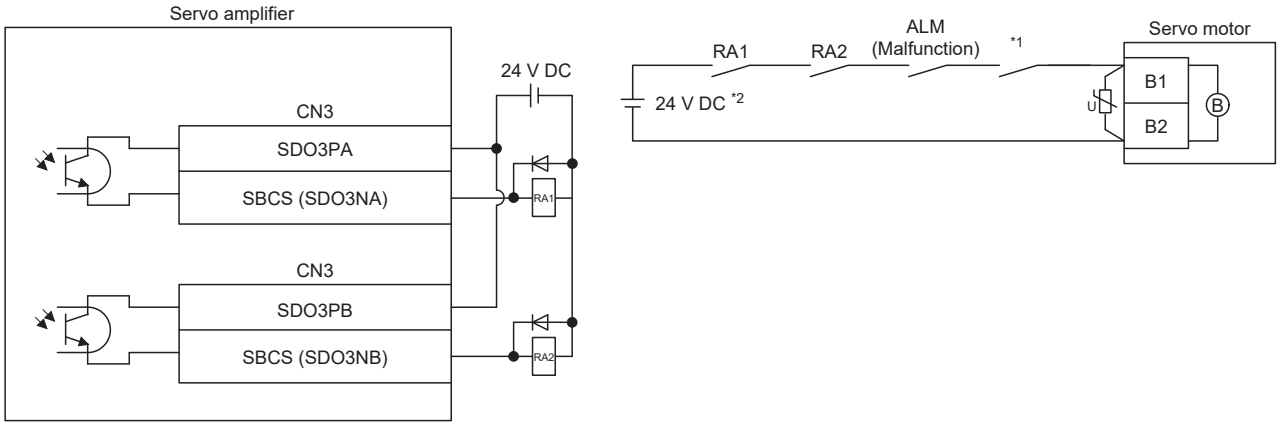

*1 The circuit should be shut off in conjunction with the emergency stop switch.
*2 Do not use the 24 V DC interface power supply for the electromagnetic brake.

10.9 Noise reduction techniques

This section provides information on measures that prevent the servo amplifier malfunctioning when it is installed next to peripheral devices that emit a large amount of noise.

Ground shielded cables close to the servo amplifier. Ensure that the part of the cable before the grounding point does not induce electromagnetic noise to the section of the cable after the grounding point. Strip part of the shielded cable, then ground the exposed portion of the cable on a large surface of the cabinet. A metal cable clamp can also be used to ground the cable (shown below). Mask the painted internal wall of the cabinet that touches the cable clamp.

• Exposed shield

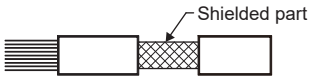

• Grounding the shield

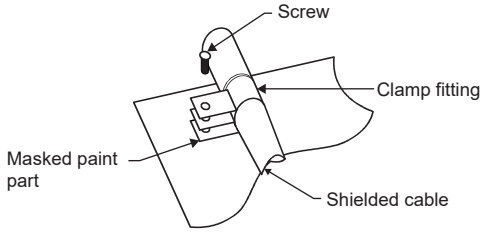

Ground both ends of the cable of the CN3 safety signal with the cable clamp. The shield length from the servo amplifier to the cable clamp should be within 30 cm.

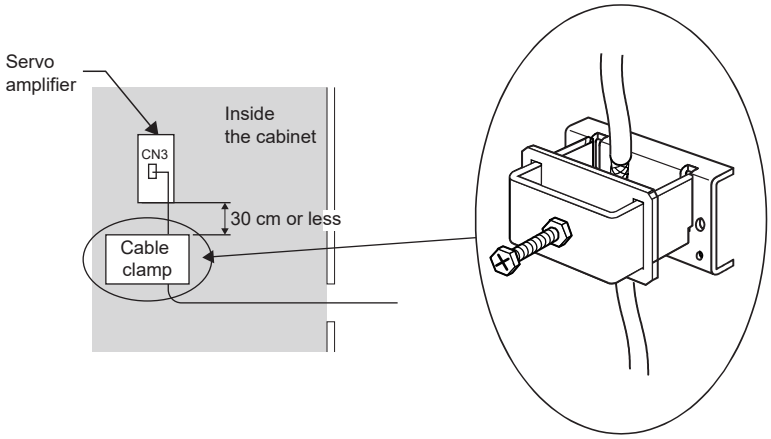

For the grounding of the shield of the I/O signal cable, SCC 15-F (Phoenix Contact) can be used. Refer to the following for details.

☞ Page 410 SCC 15-F Shield connection clamp

10.10 Example of connection with other devices

Safety sub-function control by input device

This figure shows the connection that allows execution of safety sub-functions from the safety controller using the input device assigned to pins of the CN3 connector.

The safety level Category 4 PL e, SIL 3 can be achieved with input signal diagnostics.

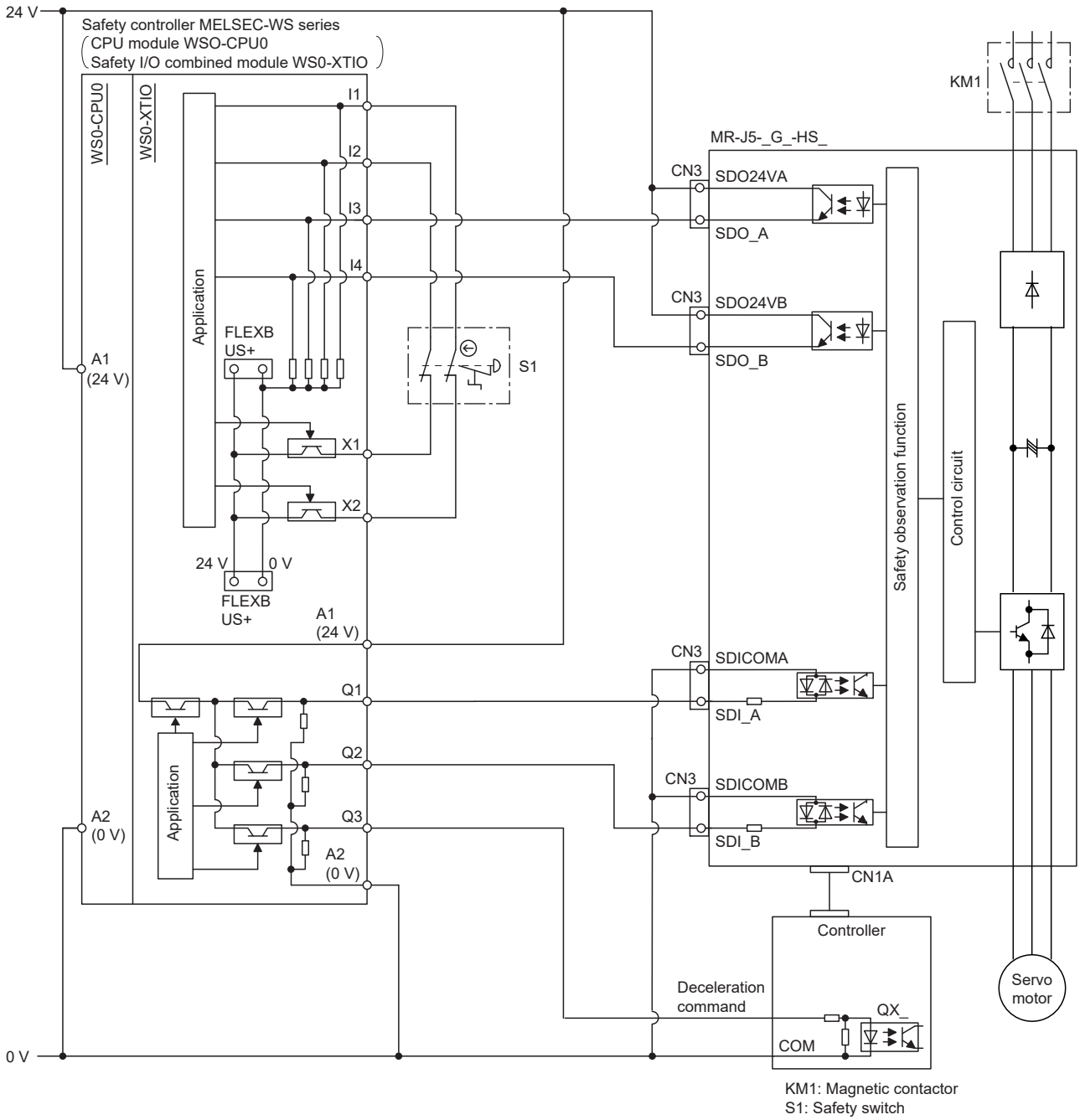

Safety sub-function control by network

This figure shows connection that allows execution of safety sub-functions via CC-Link IE TSN Network.
Wiring can be reduced using this method.

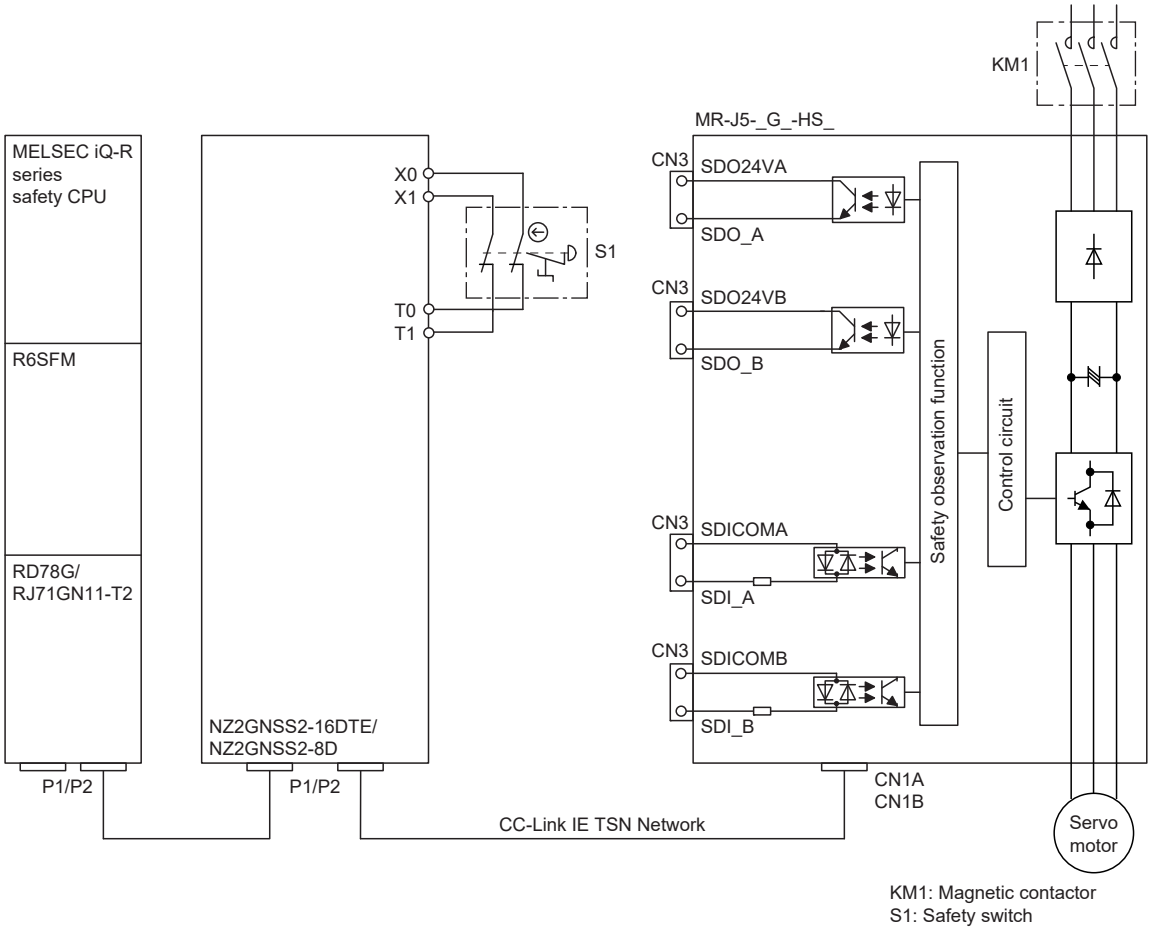

11 USING A LINEAR SERVO MOTOR

11.1 Functions and configuration

Outline

The following shows the differences between the linear servo motor and the rotary servo motor.

Category	Item		Differences		Remark
			Linear servo motor	Rotary servo motor	
Servo motor magnetic pole alignment	Magnetic pole detection		Required	Not required (adjusted before shipping)	Automatically executed at the first servo-on after the power is turned on. For the absolute position linear encoder, [Pr. PL01] can disable the magnetic pole detection. The timing of magnetic pole detection can be changed with [Pr. PL01]. ☞ Page 502 Magnetic pole detection method setting
Homing	Reference home position		1048576 pulses unit (initial value)	One servo motor revolution unit	Homing pitch can be changed with servo parameter setting. ☞ Page 502 Magnetic pole detection method setting
Absolute position detection system	Absolute position encoder battery		Not required	Differs depending on the servo motor.	The following alarms and warnings are not detected. • [AL. 025 Absolute position erased] • [AL. 092 Battery cable disconnection warning] • [AL. 09F Battery warning] • [AL. 0E3 Absolute position counter warning]
Auto tuning	Load to motor inertia ratio (J)		Load to motor mass ratio	Load to motor inertia ratio	—
Machine diagnosis	Gear failure diagnosis function		Unavailable	Available	—
	Belt diagnosis function		Unavailable	Available	—
MR Configurator2 (SW1DNC-MRC2-_)	Servo motor speed (Data display and setting)		mm/s unit	r/min unit	—
	Test operation function	Positioning operation	○	○	—
		Motor-less operation	×	○	—
		JOG operation	×	○	—
		Program operation	○	○	—

Configuration including peripheral equipment

LM-H3 series/LM-U2 series/LM-F series/LM-K2 series

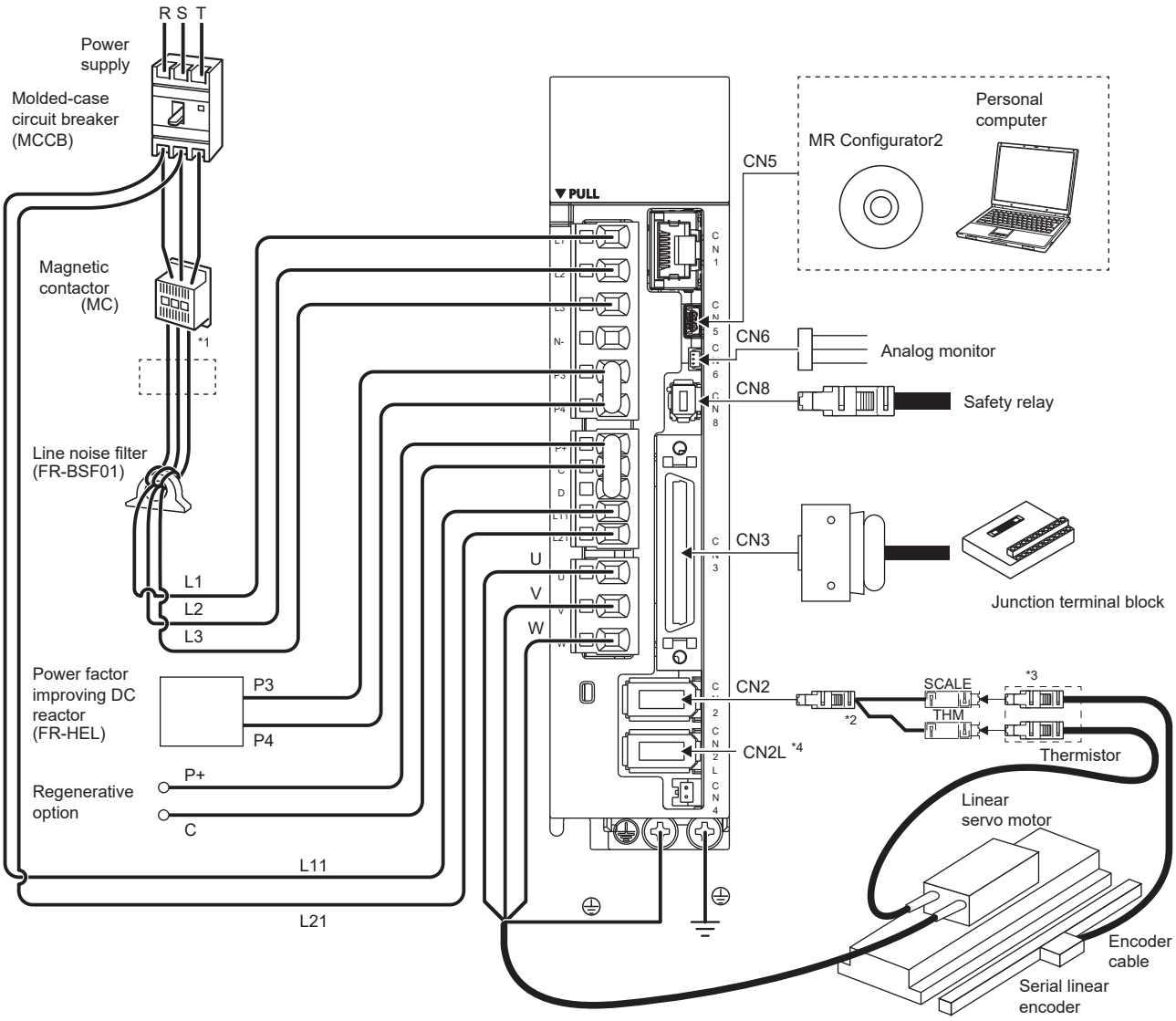

*1 The power factor improving AC reactor can also be used. In this case, the power factor improving DC reactor cannot be used.

*2 For the branch cable, use the MR-J4THCBL03M (optional).

*3 Connect the thermistor to THM of the branch cable and connect the encoder cable to SCALE correctly. Incorrect connection triggers [AL. 016].

*4 This is for the MR-J5-_A-RJ_ servo amplifier. The MR-J5-_A_ servo amplifier does not have the CN2L connector.

LM-AJ series/LM-AU series

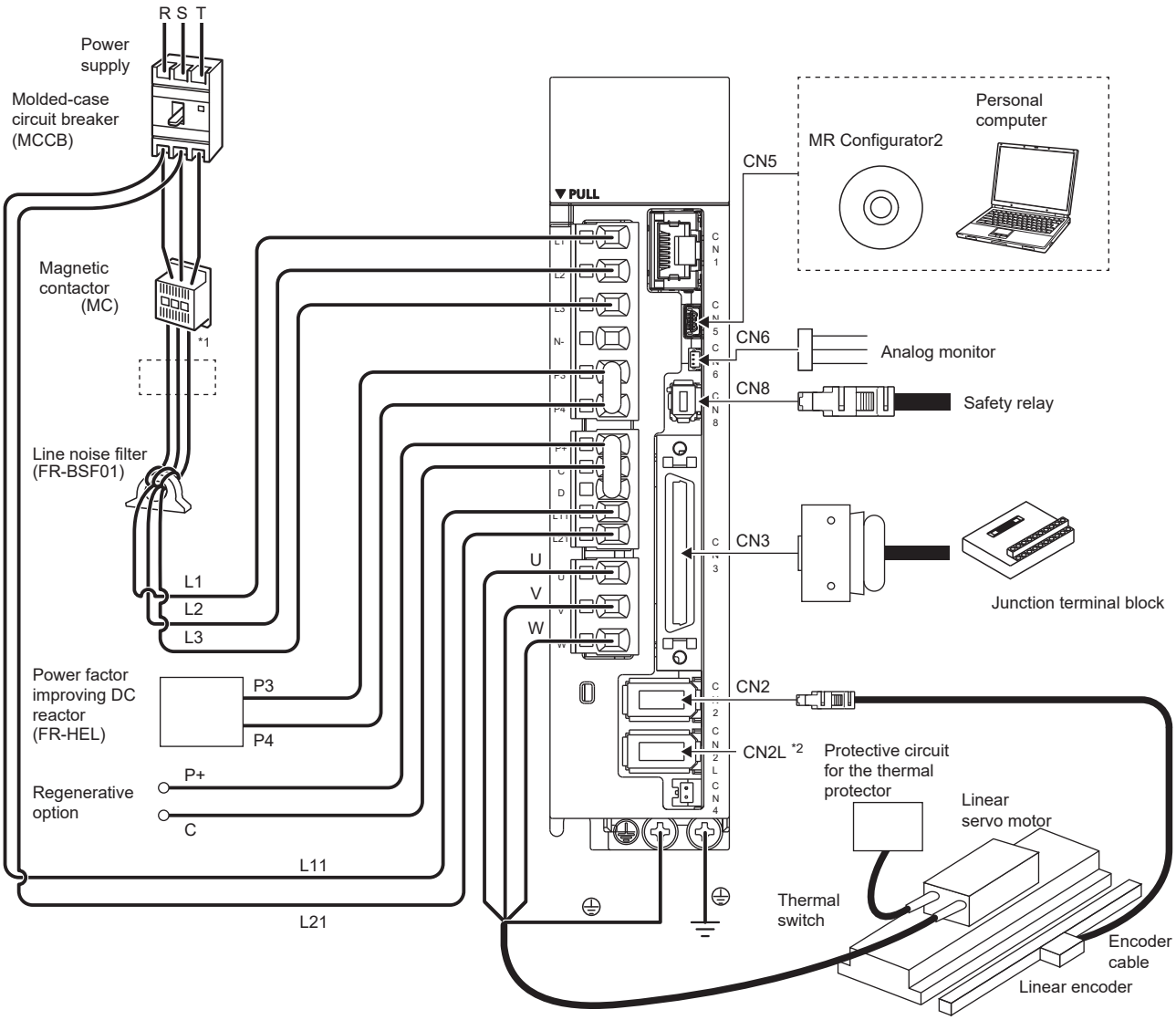

*1 The power factor improving AC reactor can also be used. In this case, the power factor improving DC reactor cannot be used.

*2 This is for the MR-J5-_A-RJ_ servo amplifier. The MR-J5-_A_ servo amplifier does not have the CN2L connector.

11.2 Startup [G] [B]

When using a linear servo motor, set [Pr. PA01.1 Operation mode selection] to "4" (Linear servo motor control mode).
When using the MR-J5_-_B_, the terms below have the following meanings.

- LSP (Forward rotation stroke end) → FLS (Upper stroke limit)
- LSN (Reverse rotation stroke end) → RLS (Lower stroke limit)

Startup procedure

Start up the linear servo system with the following procedure.

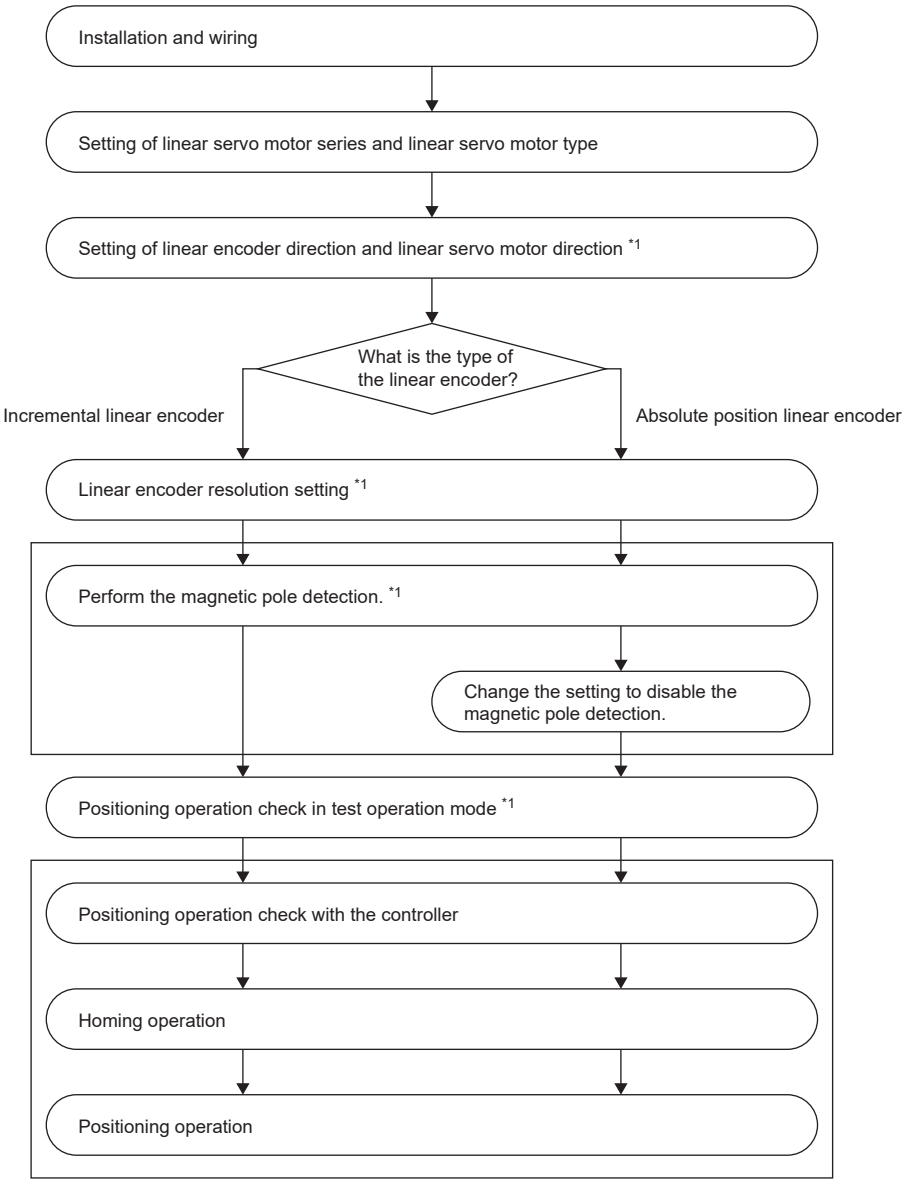

*1 Use MR Configurator2.

Setting of linear servo motor series and linear servo motor type

Set the linear servo motor series and linear servo motor type with [Pr. PA17 Servo motor series setting] and [Pr. PA18 Servo motor type setting].

Setting of linear encoder direction and linear servo motor direction

Set [Pr. PC27.0 Encoder pulse count polarity selection] so that the positive direction of the linear servo motor matches the increasing direction of the linear encoder feedback.

Servo parameter	Description
PC27.0	Encoder pulse count polarity selection 0: Encoder pulse increasing direction in the servo motor CCW or positive direction 1: Encoder pulse decreasing direction in the servo motor CCW or positive direction Initial value: 0 (encoder pulse increasing direction in the servo motor CCW or positive direction)

■Servo parameter setting method

1. Confirm the positive direction of the linear servo motor. [Pr. PA14] determines the relation of the travel direction of the linear servo motor under commands. Refer to the following table.

Setting value of [Pr. PA14]	Travel direction of linear servo motor	
	Address increasing command	Address decreasing command
0	Positive direction	Negative direction
1	Negative direction	Positive direction

The positive and negative directions of the linear servo motor are as follows.

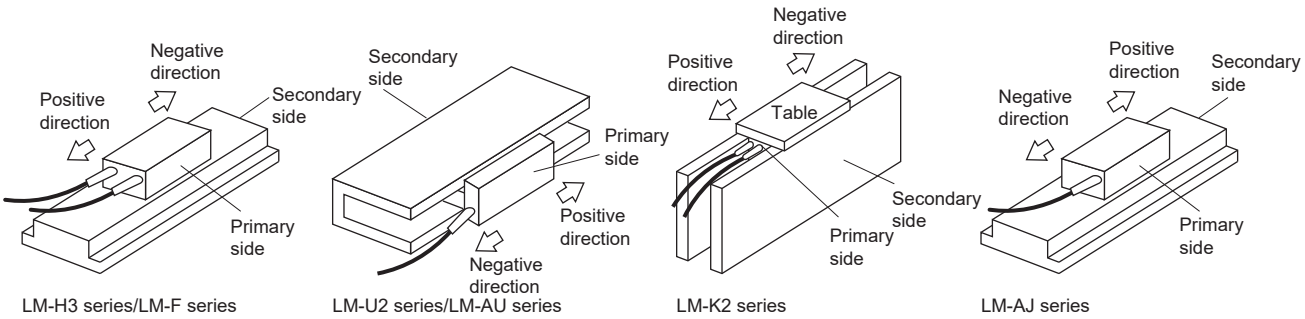

LM-H3 series/LM-F series　LM-U2 series/LM-AU series　LM-K2 series　LM-AJ series

2. Check the increasing direction of the linear encoder.

3. If the positive direction of the linear servo motor matches the increasing direction of the linear encoder, set [Pr. PC27.0 Encoder pulse count polarity selection] to "0" (encoder pulse increasing direction in the servo motor CCW or positive direction). If the positive direction of the linear servo motor does not match the increasing direction of the linear encoder, set [Pr. PC27.0] to "1" (encoder pulse decreasing direction in the servo motor CCW or positive direction).

■Confirmation method

Confirm the positive direction of the linear servo motor and the increasing direction of the linear encoder in the following procedure.

1. In servo-off status, move the linear servo motor in the positive direction manually.
2. Confirm the servo motor speed (in the positive and negative directions) at that time with MR Configurator2.
3. The servo motor speed is a positive value when [Pr. PC27.0 Encoder pulse count polarity selection] is set to "0" (encoder pulse increasing direction in the servo motor CCW or positive direction), the positive direction of the linear servo motor matches the increasing direction of the linear encoder, and the linear servo motor is operated in the positive direction. If the positive direction of the linear servo motor does not match the increasing direction of the linear encoder, the servo motor speed will be a negative value. The servo motor speed is a negative value when [Pr. PC27.0 Encoder pulse count polarity selection] is set to "1" (encoder pulse decreasing direction in the servo motor CCW or positive direction), the positive direction of the linear servo motor matches the increasing direction of the linear encoder, and the linear servo motor is operated in the positive direction.

Linear encoder resolution setting

Set the ratio to the linear encoder resolution with [Pr. PL02 Linear encoder resolution setting - Numerator] and [Pr. PL03 Linear encoder resolution setting - Denominator].

Precautions

- The setting values of these servo parameters are enabled after the power is cycled or the software is reset.
- If incorrect values are set for [Pr. PL02] and [Pr. PL03], the linear servo motor may not operate properly, or [AL. 027] or [AL. 042] may occur in the positioning operation and the magnetic pole detection.

■Servo parameter setting

Set the values that apply to the following equation.

$$\frac{\text{[Pr. PL02 Linear encoder resolution setting - Numerator]}}{\text{[Pr. PL03 Linear encoder resolution setting - Denominator]}} = \text{Linear encoder resolution [μm]}$$

■Servo parameter setting example

- When the linear encoder resolution is 0.5 μm

$$\frac{\text{[Pr. PL02]}}{\text{[Pr. PL03]}} = \text{Linear encoder resolution} = 0.5\ \mu\text{m} = \frac{1}{2}$$

The following shows the simplified chart for the setting values of [Pr. PL02] and [Pr. PL03].

—		Linear encoder resolution [μm]							
		0.01	0.02	0.05	0.1	0.2	0.5	1.0	2.0
Setting value	[Pr. PL02]	1	1	1	1	1	1	1	2
	[Pr. PL03]	100	50	20	10	5	2	1	1

Settings when connecting the LM-AJ series/LM-AU series

The LM-AJ series and LM-AU series are not equipped with a thermistor that can be connected to a servo amplifier. They are equipped only with a thermal protector that can be connected to an external relay. Configure a relay circuit that shuts off the power supply when the thermal switch opens due to overheating.

In addition, when driving the LM-AJ series or LM-AU series, set [Pr. PD12.3 Servo motor thermistor - Enabled/disabled selection] to "1" to disable the thermistor. If this setting is not configured, [AL. 046.3 Thermistor disconnected error] will occur.

Magnetic pole detection

Outline of magnetic pole detection

Before the positioning operation of the linear servo motor, perform the magnetic pole detection. When [Pr. PL01.0] is set to the initial value, perform the magnetic pole detection only at the first servo-on after the power is turned on.
The magnetic pole detection includes the following two methods. Each method has advantages and disadvantages. Select a magnetic pole detection method suitable for the usage.
In the initial value, the position detection method is selected.

Magnetic pole detection	Advantage	Disadvantage
Position detection method	1. The magnetic pole detection has a high degree of accuracy. 2. The adjustment procedure at the magnetic pole detection is simple.	1. The travel distance at the magnetic pole detection is long. 2. For equipment with small friction, the initial magnetic pole detection error may occur.
Minute position detection method	1. The travel distance at the magnetic pole detection is short. 2. Even for equipment with small friction, the magnetic pole detection is available.	1. The adjustment procedure at the magnetic pole detection is complex. 2. If a disturbance occurs during the magnetic pole detection, [AL. 027 Initial magnetic pole detection error] may occur.

Precautions on magnetic pole detection

- For the magnetic pole detection, the linear servo motor automatically starts to move simultaneously with turning-on of the servo-on command.
- If the magnetic pole detection is not executed properly, the linear servo motor may operate unexpectedly.
- Establish the machine configuration to use LSP (Forward rotation stroke end) and LSN (Reverse rotation stroke end). The machine may be damaged due to a collision without LSP and LSN.
- Assign LSP and LSN, and perform the magnetic pole detection also in the torque mode.
- At the magnetic pole detection, whether the direct drive motor moves in the positive or negative direction is unpredictable.
- Depending on the setting value of [Pr. PL09 Magnetic pole detection voltage level], an overload, overcurrent, magnetic pole detection alarm, or others may occur.
- When performing the positioning operation from a controller, use the sequence which confirms the normal completion of the magnetic pole detection and the servo-on status, then outputs the positioning command. If the controller outputs the positioning command before RD (Ready) turns on, the command may not be accepted or an alarm may occur.
- If the linear encoder is installed incorrectly, an alarm may occur.
- If the linear encoder resolution setting ([Pr. PL02 Linear encoder resolution setting - Numerator] and [Pr. PL03 Linear encoder resolution setting - Denominator]) or the setting value of [Pr. PL09] is incorrect, an alarm may occur.
- For the machine whose friction becomes 30 % or more of the continuous thrust, the direct drive motor may not operate properly after the magnetic pole detection.
- For the horizontal shaft of the machine whose unbalanced thrust becomes 20 % or more of the continuous thrust, the direct drive motor may not operate properly after the magnetic pole detection.
- The magnetic pole detection may fail if performed simultaneously with multiple axes connected to each other (e.g. a tandem configuration). Perform the magnetic pole detection for each axis. At this time, set the axes for which the magnetic pole detection is not performed to servo-off.
- During the magnetic pole detection, the value of [Pr. PE47 Unbalanced torque offset] is regarded as "0".
- When detecting magnetic poles on the vertical axis, use a counterweight or the like to prevent the linear servo motor from moving with the force of gravity.

Magnetic pole detection procedure

Point

When using a controller manufactured by Mitsubishi Electric, the servo parameter setting values are overwritten from the controller. Once magnetic pole detection is complete, note down the changed servo parameter setting values, and set the same values in the controller.

■Magnetic pole detection by position detection method

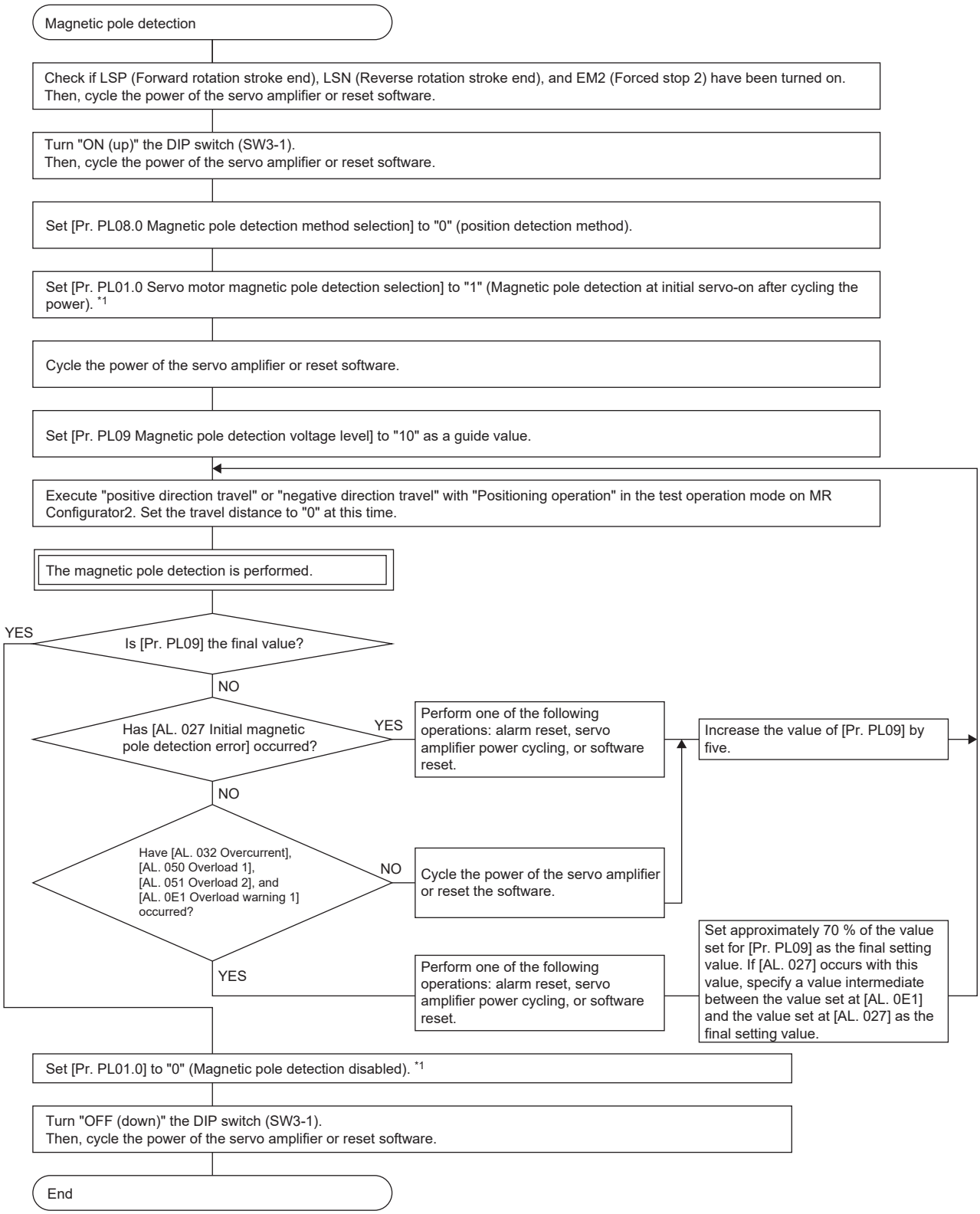

*1 For the incremental system, the setting of [Pr. PL01] is not required.

■Magnetic pole detection by minute position detection method

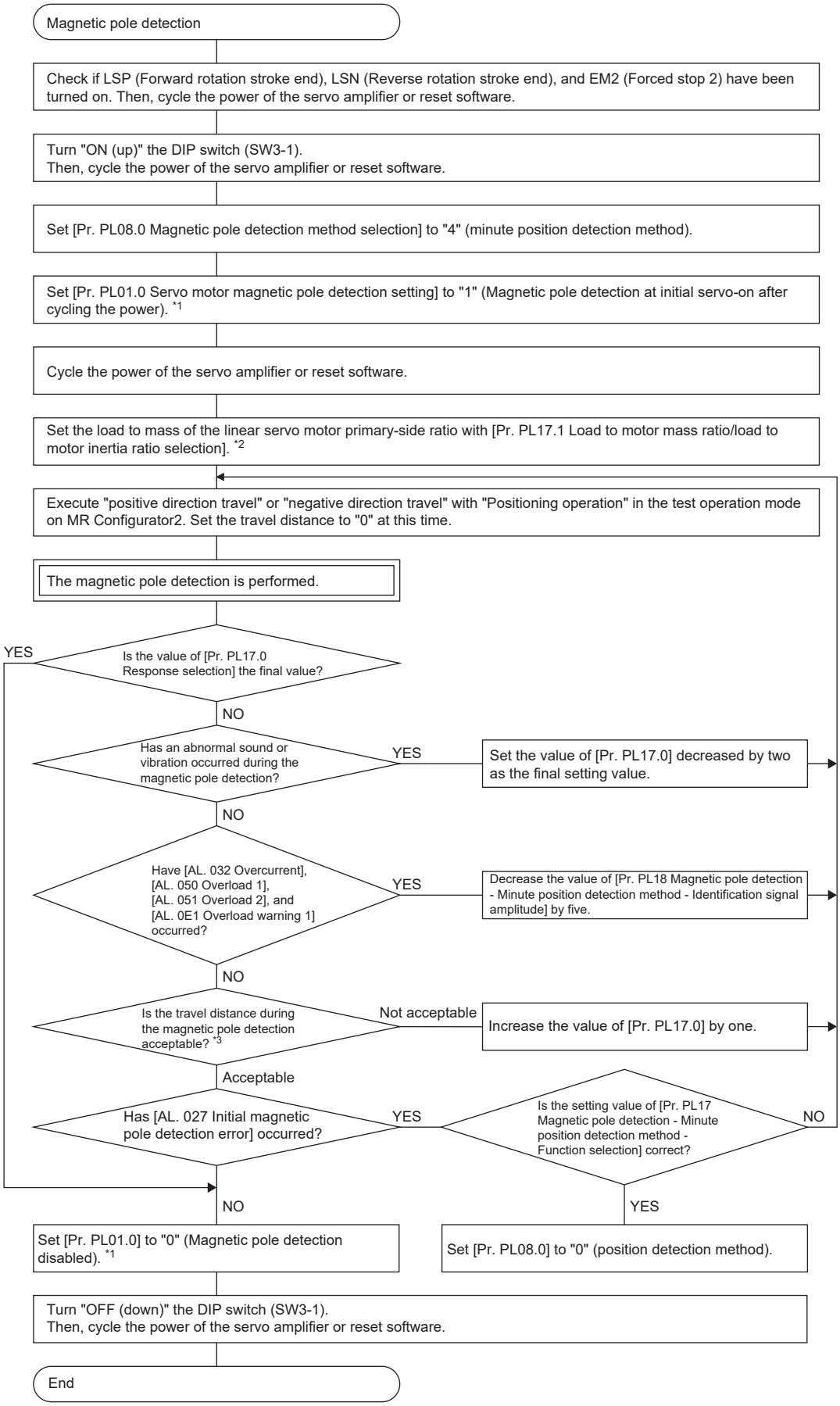

*1 For the incremental system, the setting of [Pr. PL01] is not required.
*2 If the load to mass of the linear servo motor primary-side ratio is unknown, perform the magnetic pole detection by the position detection method, and then perform the auto tuning to set an estimated value.
*3 For the magnetic pole detection by the minute position detection method, the maximum travel distance at the magnetic pole detection must be 0.5 mm or less. To shorten the travel distance, increase the value of [Pr. PL17.0].

Stroke limit disabled setting at magnetic pole detection

When performing a magnetic pole detection without LSP (Forward rotation stroke end) and LSN (Reverse rotation stroke end), set [Pr. PL08.2 Magnetic pole detection - Stroke limit enabled/disabled selection].

Servo parameter	Description
PL08.2	Magnetic pole detection - Stroke limit enabled/disabled selection 0: Enabled 1: Disabled Initial value: 0 (enabled)

Preparation for magnetic pole detection

For the magnetic pole detection, use the test operation mode (positioning operation) of MR Configurator2. Turn off the servo amplifier power, and turn on the DIP switch (SW3-1). Turning on the power enables the test operation mode.

Magnetic pole detection method setting

Set the magnetic pole detection method by using [Pr. PL08.0 Magnetic pole detection method selection].
In the following cases, set the magnetic pole detection method to the minute position detection method.

- When a shortened travel distance at the magnetic pole detection is required
- When the magnetic pole detection by the position detection method is not completed properly

Servo parameter	Description
PL08.0	Magnetic pole detection method selection 0: Position detection method 4: Minute position detection method Initial value: 0 (position detection method)

For an absolute position linear encoder, set [Pr. PL01.0 Servo motor magnetic pole detection selection] to "1" (magnetic pole detection at initial servo-on after cycling the power). After the completion of the magnetic pole detection, change [Pr. PL01.0] to "0" (magnetic pole detection disabled).

Servo parameter	Description
PL01.0	Servo motor magnetic pole detection selection 0: Magnetic pole detection disabled 1: Magnetic pole detection at initial servo-on after cycling the power 5: Magnetic pole detection at every servo-on Initial value: 1 (magnetic pole detection at initial servo-on after cycling the power)

Setting of magnetic pole detection voltage level by position detection method

For magnetic pole detection using the position detection method, set the voltage level with [Pr. PL09 Magnetic pole detection voltage level]. For the magnetic pole detection by the minute position detection method, the voltage level setting is not required.

■Guideline of servo parameter setting

Set the parameters by referring to the following table.

Servo status	Small ← Medium → Large (10 or less (initial value) 50 or more)	
Thrust at operation	Small	Large
Overload, overcurrent alarm	Hardly occurs	Easily occurs
Magnetic pole detection alarm	Easily occurs	Hardly occurs
Magnetic pole detection accuracy	Low	High

■Setting procedure

1. Detect the magnetic poles, then increase the setting value of [Pr. PL09 Magnetic pole detection voltage level] until [AL. 050 Overload 1], [AL. 051 Overload 2], [AL. 033 Overvoltage], [AL. 0E1 Overload warning 1], and [AL. 0EC Overload warning 2] occur. Increase the setting value by five as a guide value. When these alarms and warnings occur during the magnetic pole detection with MR Configurator2, the test operation of MR Configurator2 automatically completes and the servo-off state is established.
2. Set the value to approximately 70 % of the value which triggers [AL. 050], [AL. 051], [AL. 033], [AL. 0E1], and [AL. 0EC]. If [AL. 027 Initial magnetic pole detection error] occurs with this value, specify a value intermediate between the value set at occurrence of [AL. 050], [AL. 051], [AL. 033], [AL. 0E1], and [AL. 0EC] and the value set at the magnetic pole detection alarm occurrence as the final setting value.
3. Perform the magnetic pole detection again with the final setting value, and make sure that the accuracy of the magnetic pole detection is as required.

■Setting example

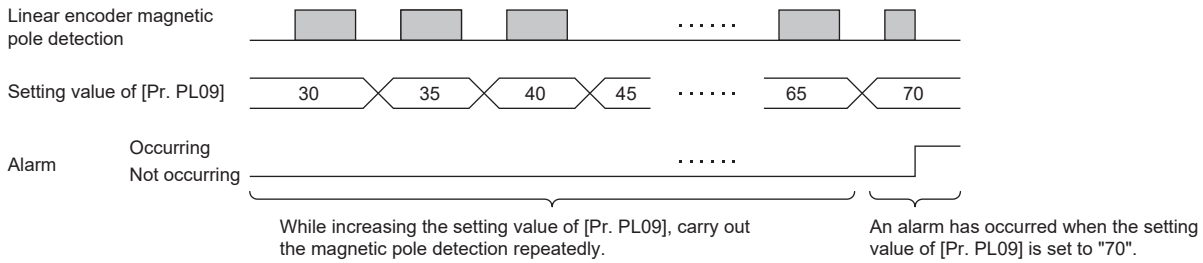

In this example, set the final setting value of [Pr. PL09 Magnetic pole detection voltage level] to 49 (setting value at the alarm occurrence = 70 × 0.7).

Setting of response performance and load to motor mass ratio by minute position detection method

When using the minute position detection method, set the response performance with [Pr. PL17.0 Response selection] and set the load to motor mass ratio with [Pr. PL17.1 Load to motor mass ratio/load to motor inertia ratio selection]. If the load to mass of the linear servo motor primary-side ratio is unknown, perform the magnetic pole detection by the position detection method, and then perform the auto tuning to set an estimated value.

• [Pr. PL17.0 Response selection]

Setting value	Responsiveness
0	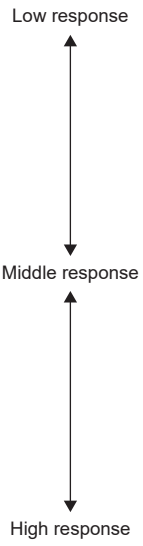
1	
2	
3	
4	
5	
6	
7	
8	
9	
A	
B	
C	
D	
E	
F	

Initial value: 0

• [Pr. PL17.1 Load to motor mass ratio/load to motor inertia ratio selection]

Setting value	Load to motor mass ratio/load to motor inertia ratio
0	10 times or less
1	10 multiplier
2	20 multiplier
3	30 multiplier
4	40 multiplier
5	50 multiplier
6	60 multiplier
7	70 multiplier
8	80 multiplier
9	90 multiplier
A	100 multiplier
B	110 multiplier
C	120 multiplier
D	130 multiplier
E	140 multiplier
F	150 times or more

Initial value: 0

Setting of identification signal amplitude by minute position detection method

If [AL. 032 Overcurrent], [AL. 050 Overload 1], [AL. 051 Overload 2], or [AL. 0E1 Overload warning 1] occurs at the magnetic pole detection by the minute position detection method, set a smaller value for [Pr. PL18 Magnetic pole detection - Minute position detection method - Identification signal amplitude]. Basically, [Pr. PL18] does not need to be changed from the initial value.

Operation at magnetic pole detection

Precautions

- After the magnetic pole detection, check the positioning accuracy with the test operation (positioning operation function) of MR Configurator2.
- When the absolute position linear encoder is used, if a gap is generated to the positional relation between the linear encoder and the linear servo motor, perform the magnetic pole detection again.
- The magnetic pole detection improves in accuracy when performed with no load.

■For incremental encoder

For the incremental linear encoder, the magnetic pole detection is required every time the power is turned on or the software is reset.

By turning on the servo-on command from the controller after the power-on, the magnetic pole detection is automatically carried out. Therefore, there is no need to set [Pr. PL01.0 Servo motor magnetic pole detection selection] for executing magnetic pole detection.

- Timing chart

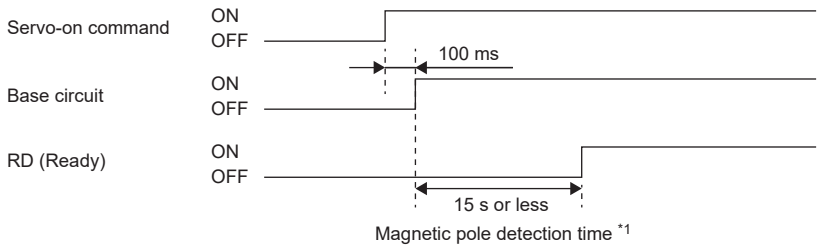

*1 The magnetic pole detection time indicates the operation time when LSP (Forward rotation stroke end) and LSN (Reverse rotation stroke end) are on.

- Linear servo motor movement (when LSP (Forward rotation stroke end) and LSN (Reverse rotation stroke end) are on)

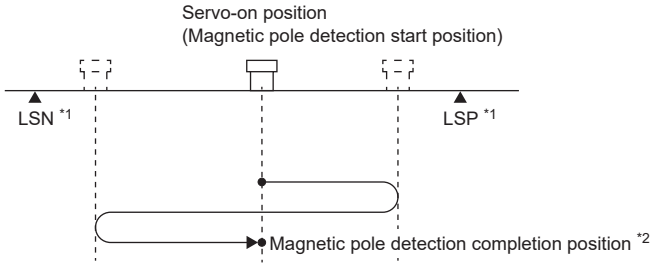

*1 When LSP (Forward rotation stroke end) or LSN (Reverse rotation stroke end) is turned off during the magnetic pole detection, the operation of the magnetic pole detection is carried on to the opposite direction.
When both LSP and LSN are off, [AL. 027 Initial magnetic pole detection error] occurs.

*2 The following shows the pitch against the magnetic pole.

Linear servo motor series	LM-H3 LM-F	LM-U2		LM-K2	LM-AJ	LM-AU
		Medium thrust (Continuous thrust: Less than 400 N)	Large thrust (Continuous thrust: 400 N or more)			
Pitch against magnetic pole [mm]	48	30	60	48	20	60

• Linear servo motor movement (when LSP (Forward rotation stroke end) or LSN (Reverse rotation stroke end) is off)

When LSP or LSN is off at servo-on, the magnetic pole detection is performed as follows.

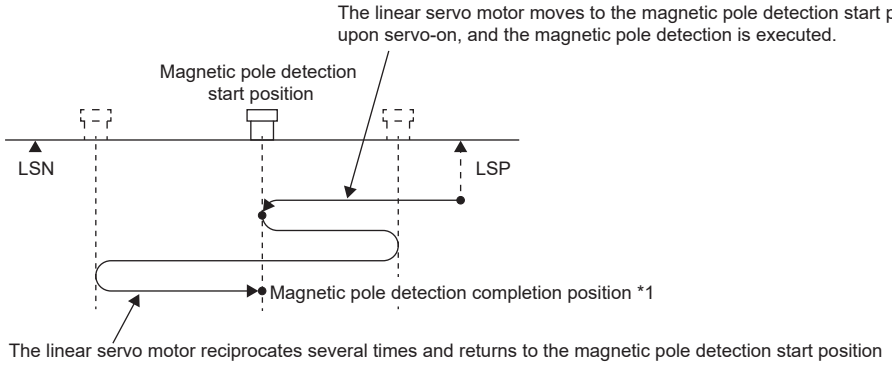

*1 The following shows the pitch against the magnetic pole.

Linear servo motor series	LM-H3 LM-F	LM-U2		LM-K2	LM-AJ	LM-AU
		Medium thrust (Continuous thrust: Less than 400 N)	Large thrust (Continuous thrust: 400 N or more)			
Pitch against magnetic pole [mm]	48	30	60	48	20	60

■For absolute position linear encoder

The magnetic pole detection is required in the following cases.

- When the system is set up (at initial startup of equipment)
- After a servo amplifier is replaced
- After a linear servo motor (primary-side or secondary-side) is replaced
- After a linear encoder (scale or head) is replaced or remounted

If a gap is generated to the positional relation between the linear encoder and the linear servo motor, perform the magnetic pole detection again.

1. Execute the magnetic pole detection.

☞ Page 505 For incremental encoder

2. After the completion of the magnetic pole detection, change [Pr. PL01.0 Servo motor magnetic pole detection selection] to "0" (magnetic pole detection disabled).

Servo parameter	Description
PL01.0	Servo motor magnetic pole detection selection 0: Magnetic pole detection disabled 1: Magnetic pole detection at initial servo-on after cycling the power 5: Magnetic pole detection at every servo-on Initial value: 1 (magnetic pole detection at initial servo-on after cycling the power)

When [Pr. PL01.0 Servo motor magnetic pole detection selection] is set to "0" (magnetic pole detection disabled) after the magnetic pole detection, the magnetic pole detection after each power-on is not required.

How to replace servo amplifier without magnetic pole detection

When replacing the servo amplifier, carry out the magnetic pole detection again. If the magnetic pole detection cannot be performed, write the magnetic pole information from the servo amplifier before replacement to the one after replacement by using MR Configurator2.

Procedure

1. Read the magnetic pole information of the servo amplifier before replacement.
2. Write the read magnetic pole information to the servo amplifier after replacement.
3. To ensure safety, perform the test operation with the torque limited and confirm that the servo motor can be operated safely.

Migration method of the magnetic pole information

■How to read magnetic pole information from servo amplifier before replacement

1. Open the project in MR Configurator2 and select the model.
2. Check that the personal computer is connected with the servo amplifier, and select "Diagnosis" and then "Linear diagnosis".
3. Click "Magnetic Pole Information" to open the magnetic pole information window.
4. Click "Read" in the magnetic pole information window.
5. Note down the values shown in data 1 of the magnetic pole information window.

■How to write magnetic pole information to servo amplifier after replacement

1. Open the project in MR Configurator2 and select the model.
2. Check that the personal computer is connected with the servo amplifier, and select "Diagnosis" and then "Linear diagnosis".
3. Click "Magnetic Pole Information" to open the magnetic pole information window.
4. To data 1 of the magnetic pole information window, input the values of the magnetic pole information which were noted down.
5. Click "Write" in the magnetic pole information window.
6. Cycle the power of the servo amplifier.

11.3 Startup [A]

When using a linear servo motor, set [Pr. PA01.1 Operation mode selection] to "4" (Linear servo motor control mode).

Startup procedure

Start up the linear servo system with the following procedure.

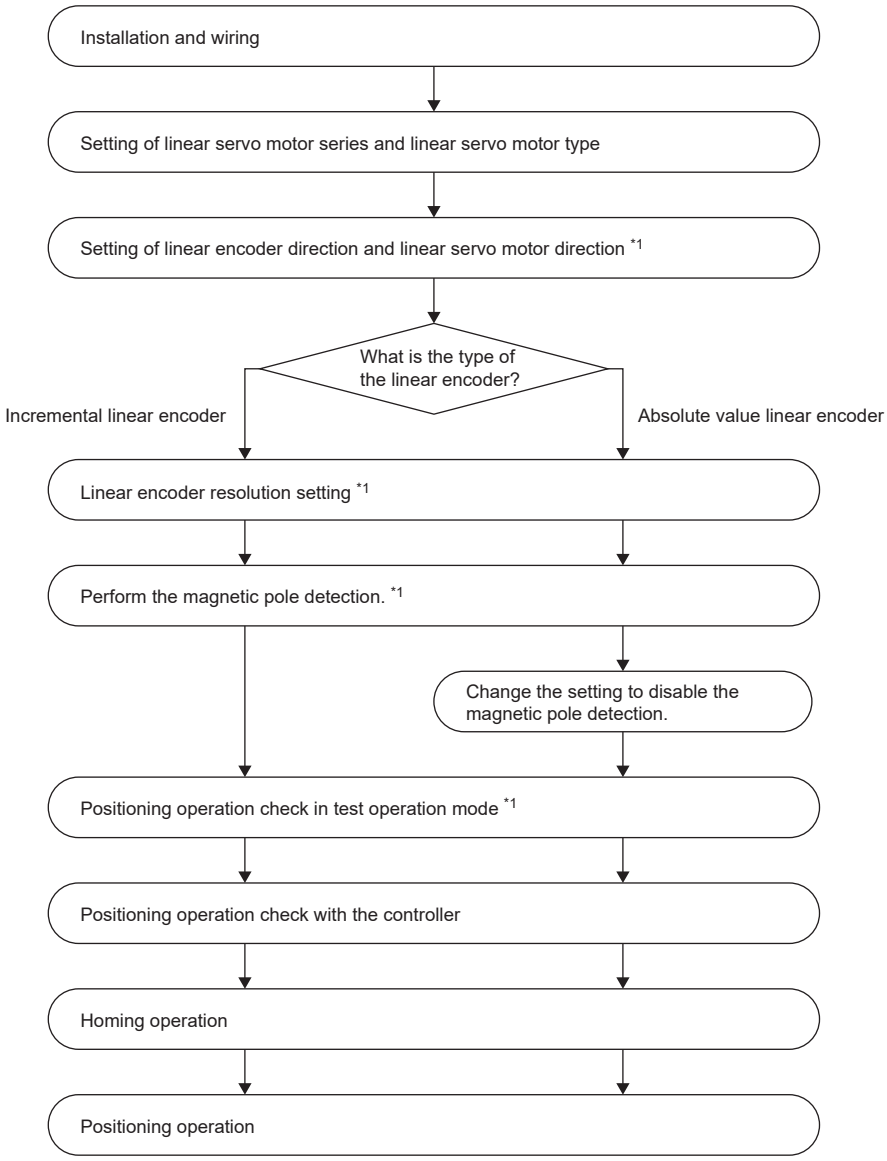

*1 Use MR Configurator2.

Setting of linear servo motor series and linear servo motor type

Set the linear servo motor series and linear servo motor type with [Pr. PA17 Servo motor series setting] and [Pr. PA18 Servo motor type setting].

Setting of linear encoder direction and linear servo motor direction

Set [Pr. PC45.0 Encoder pulse count polarity selection] so that the positive direction of the linear servo motor matches the increasing direction of the linear encoder feedback.

Servo parameter	Description
PC45.0	Encoder pulse count polarity selection 0: Encoder pulse increasing direction in the servo motor CCW or positive direction 1: Encoder pulse decreasing direction in the servo motor CCW or positive direction Initial value: 0 (encoder pulse increasing direction in the servo motor CCW or positive direction)

■Servo parameter setting method

1. Confirm the positive direction of the linear servo motor. [Pr. PA14 Travel direction selection] determines the relation of the travel direction of the linear servo motor under commands as follows.

Setting value of [Pr. PA14]	Travel direction of linear servo motor	
	Address increasing command	Address decreasing command
0	Positive direction	Negative direction
1	Negative direction	Positive direction

The positive and negative directions of the linear servo motor are as follows.

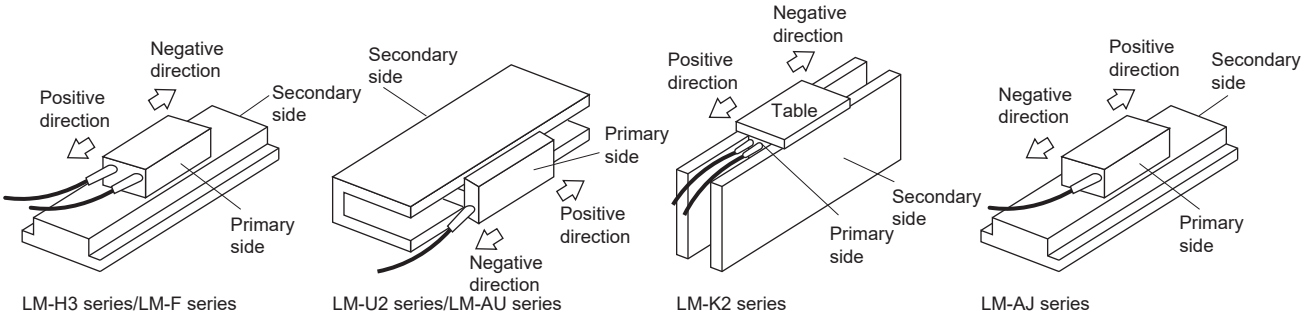

LM-H3 series/LM-F series　LM-U2 series/LM-AU series　LM-K2 series　LM-AJ series

2. Check the increasing direction of the linear encoder.

3. If the positive direction of the linear servo motor matches the increasing direction of the linear encoder, set [Pr. PC45.0 Encoder pulse count polarity selection] to "0" (encoder pulse increasing direction in the servo motor CCW or positive direction). If the positive direction of the linear servo motor does not match the increasing direction of the linear encoder, set [Pr. PC45.0] to "1" (encoder pulse decreasing direction in the servo motor CCW or positive direction).

■Confirmation method

Confirm the positive direction of the linear servo motor and the increasing direction of the linear encoder in the following procedure.

1. In servo-off status, move the linear servo motor in the positive direction manually.
2. Confirm the servo motor speed (in the positive and negative directions) at that time with MR Configurator2.
3. The servo motor speed is a positive value when [Pr. PC45.0 Encoder pulse count polarity selection] is set to "0" (encoder pulse increasing direction in the servo motor CCW or positive direction), the positive direction of the linear servo motor matches the increasing direction of the linear encoder, and the linear servo motor is operated in the positive direction. If the positive direction of the linear servo motor does not match the increasing direction of the linear encoder, the servo motor speed will be a negative value. The servo motor speed is a negative value when [Pr. PC45.0] is set to "1" (encoder pulse decreasing direction in the servo motor CCW or positive direction), the positive direction of the linear servo motor matches the increasing direction of the linear encoder, and the linear servo motor is operated in the positive direction.

Linear encoder resolution setting

Set the ratio to the linear encoder resolution with [Pr. PL02 Linear encoder resolution setting - Numerator] and [Pr. PL03 Linear encoder resolution setting - Denominator].

Precautions

- The setting values of these servo parameters are enabled after the power is cycled or the software is reset.
- If incorrect values are set for [Pr. PL02] and [Pr. PL03], the linear servo motor may not operate properly, or [AL. 027] or [AL. 042] may occur in the positioning operation and the magnetic pole detection.

■Servo parameter setting

Set the values that apply to the following equation.

$$\frac{\text{[Pr. PL02 Linear encoder resolution setting - Numerator]}}{\text{[Pr. PL03 Linear encoder resolution setting - Denominator]}} = \text{Linear encoder resolution [μm]}$$

■Servo parameter setting example

- When the linear encoder resolution is 0.5 μm

$$\frac{\text{[Pr. PL02]}}{\text{[Pr. PL03]}} = \text{Linear encoder resolution} = 0.5\ \mu\text{m} = \frac{1}{2}$$

The following shows the simplified chart for the setting values of [Pr. PL02] and [Pr. PL03].

—		Linear encoder resolution [μm]							
		0.01	0.02	0.05	0.1	0.2	0.5	1.0	2.0
Setting value	[Pr. PL02]	1	1	1	1	1	1	1	2
	[Pr. PL03]	100	50	20	10	5	2	1	1

Settings when connecting the LM-AJ series/LM-AU series

The LM-AJ series and LM-AU series are not equipped with a thermistor that can be connected to a servo amplifier. They are equipped only with a thermal protector that can be connected to an external relay. Configure a relay circuit that shuts off the power supply when the thermal switch opens due to overheating.

In addition, when driving the LM-AJ series or LM-AU series, set [Pr. PD12.3 Servo motor thermistor - Enabled/disabled selection] to "1" to disable the thermistor. If this setting is not configured, [AL. 046.3 Thermistor disconnected error] will occur.

Magnetic pole detection

Outline of magnetic pole detection

Before the positioning operation of the linear servo motor, perform the magnetic pole detection. When [Pr. PL01] is set to the initial value, perform the magnetic pole detection only at the first servo-on after the power is turned on.
The magnetic pole detection includes the following two methods. Each method has advantages and disadvantages. Select a magnetic pole detection method suitable for the usage.
In the initial value, the position detection method is selected.

Magnetic pole detection	Advantage	Disadvantage
Position detection method	1. The magnetic pole detection has a high degree of accuracy. 2. The adjustment procedure at the magnetic pole detection is simple.	1. The travel distance at the magnetic pole detection is long. 2. For equipment with small friction, the initial magnetic pole detection error may occur.
Minute position detection method	1. The travel distance at the magnetic pole detection is short. 2. Even for equipment with small friction, the magnetic pole detection is available.	1. The adjustment procedure at the magnetic pole detection is complex. 2. If a disturbance occurs during the magnetic pole detection, [AL. 027 Initial magnetic pole detection error] may occur.

Precautions on magnetic pole detection

- For the magnetic pole detection, the linear servo motor automatically starts to move simultaneously with turning-on of the servo-on command.
- If the magnetic pole detection is not executed properly, the linear servo motor may operate unexpectedly.
- Establish the machine configuration to use LSP (Forward rotation stroke end) and LSN (Reverse rotation stroke end). The machine may be damaged due to a collision without LSP and LSN.
- Assign LSP and LSN, and perform the magnetic pole detection also in the torque mode.
- At the magnetic pole detection, whether the direct drive motor moves in the positive or negative direction is unpredictable.
- Depending on the setting value of [Pr. PL09 Magnetic pole detection voltage level], an overload, overcurrent, magnetic pole detection alarm, or others may occur.
- When performing the positioning operation from a controller, use the sequence which confirms the normal completion of the magnetic pole detection and the servo-on status, then outputs the positioning command. If the controller outputs the positioning command before RD (Ready) turns on, the command may not be accepted or an alarm may occur.
- If the linear encoder is installed incorrectly, an alarm may occur.
- If the linear encoder resolution setting ([Pr. PL02 Linear encoder resolution setting - Numerator] and [Pr. PL03 Linear encoder resolution setting - Denominator]) or the setting value of [Pr. PL09] is incorrect, an alarm may occur.
- For the machine whose friction becomes 30 % or more of the continuous thrust, the direct drive motor may not operate properly after the magnetic pole detection.
- For the horizontal shaft of the machine whose unbalanced thrust becomes 20 % or more of the continuous thrust, the direct drive motor may not operate properly after the magnetic pole detection.
- The magnetic pole detection may fail if performed simultaneously with multiple axes connected to each other (e.g. a tandem configuration). Perform the magnetic pole detection for each axis. At this time, set the axes for which the magnetic pole detection is not performed to servo-off.
- During the magnetic pole detection, the value of [Pr. PE47 Unbalanced torque offset] is regarded as "0".
- When detecting magnetic poles on the vertical axis, use a counterweight or the like to prevent the linear servo motor from moving with the force of gravity.

Magnetic pole detection procedure

■Magnetic pole detection by position detection method

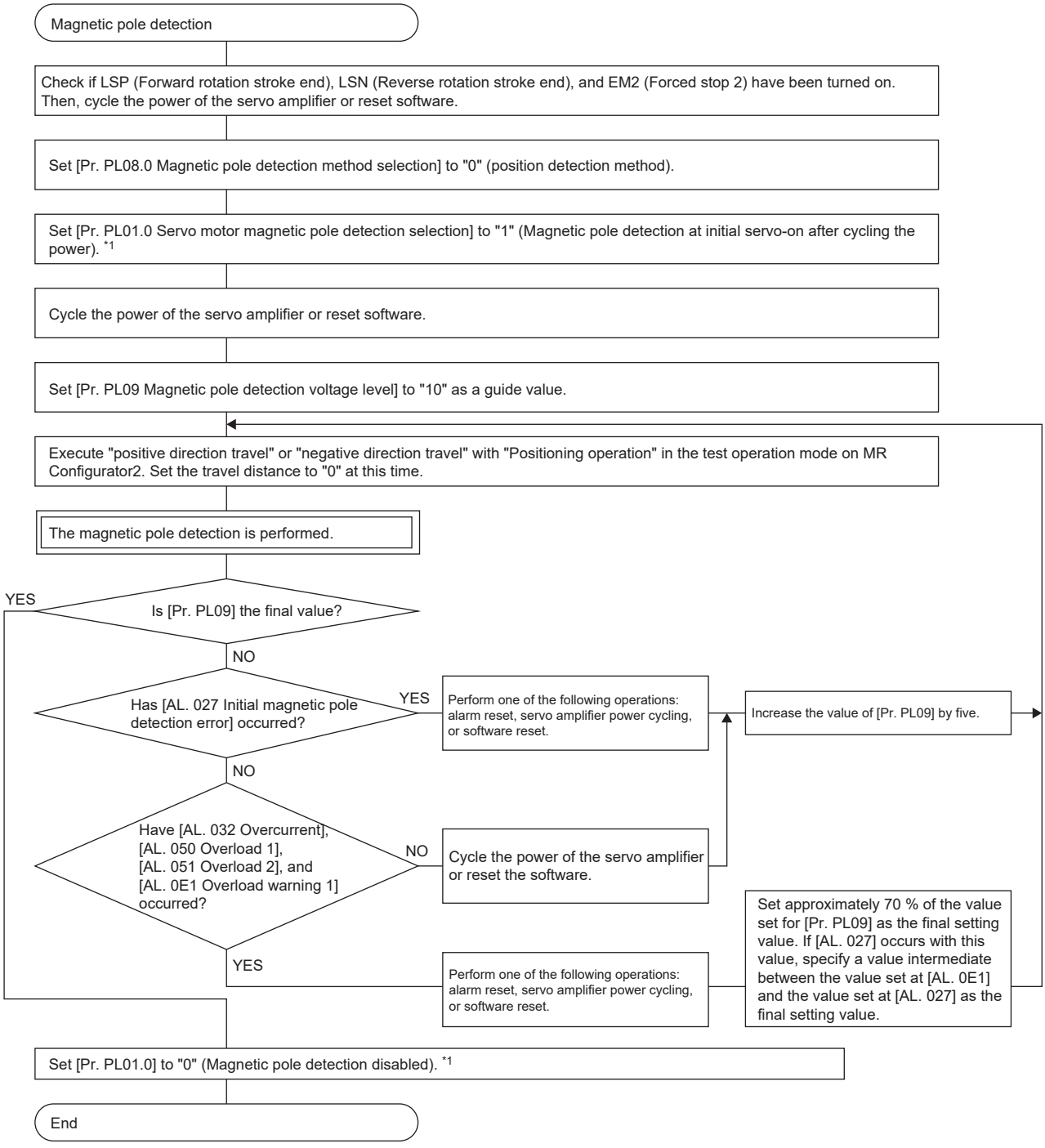

*1 For the incremental system, the setting of [Pr. PL01] is not required.

■Magnetic pole detection by minute position detection method

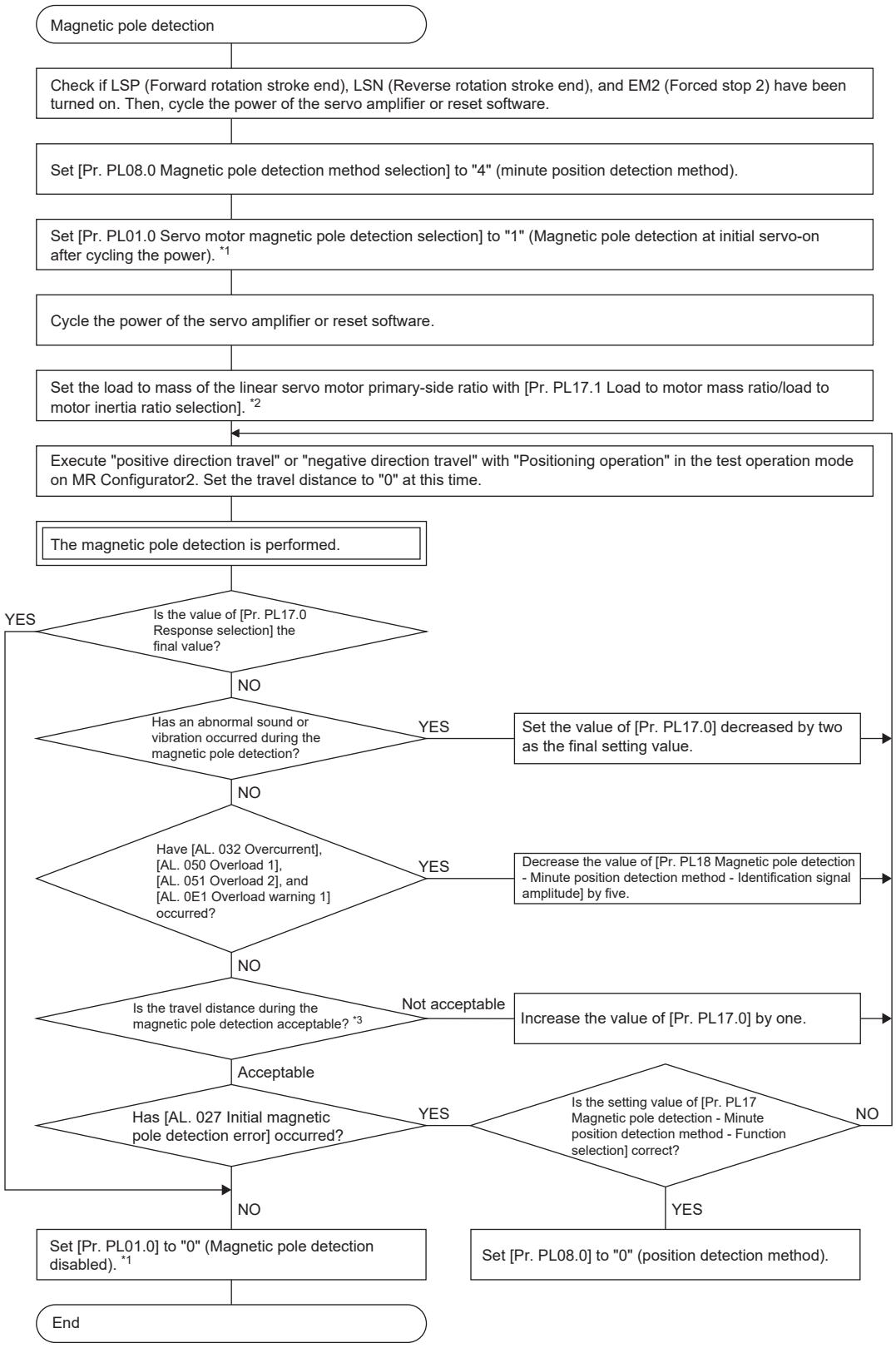

*1 For the incremental system, the setting of [Pr. PL01] is not required.

*2 If the load to mass of the linear servo motor primary-side ratio is unknown, perform the magnetic pole detection by the position detection method, and then perform the auto tuning to set an estimated value.

*3 For the magnetic pole detection by the minute position detection method, the maximum travel distance at the magnetic pole detection must be 0.5 mm or less. To shorten the travel distance, increase the value of [Pr. PL17.0].

Stroke limit disabled setting at magnetic pole detection

When performing a magnetic pole detection without LSP (Forward rotation stroke end) and LSN (Reverse rotation stroke end), set [Pr. PL08.2 Magnetic pole detection - Stroke limit enabled/disabled selection].

Servo parameter	Description
PL08.2	Magnetic pole detection - Stroke limit enabled/disabled selection 0: Enabled 1: Disabled Initial value: 0 (enabled)

Magnetic pole detection method setting

Set the magnetic pole detection method by using [Pr. PL08.0 Magnetic pole detection method selection].
In the following cases, set the magnetic pole detection method to the minute position detection method.

- When a shortened travel distance at the magnetic pole detection is required
- When the magnetic pole detection by the position detection method is not completed properly

Servo parameter	Description
PL08.0	Magnetic pole detection method selection 0: Position detection method 4: Minute position detection method Initial value: 0 (position detection method)

For an absolute position linear encoder, set [Pr. PL01.0 Servo motor magnetic pole detection selection] to "1" (magnetic pole detection at initial servo-on after cycling the power). After the completion of the magnetic pole detection, change [Pr. PL01.0] to "0" (magnetic pole detection disabled).

Servo parameter	Description
PL01.0	Servo motor magnetic pole detection selection 0: Magnetic pole detection disabled 1: Magnetic pole detection at initial servo-on after cycling the power 5: Magnetic pole detection at every servo-on Initial value: 1 (magnetic pole detection at initial servo-on after cycling the power)

Setting of magnetic pole detection voltage level by position detection method

For magnetic pole detection using the position detection method, set the voltage level with [Pr. PL09 Magnetic pole detection voltage level]. For the magnetic pole detection by the minute position detection method, the voltage level setting is not required.

■Guideline of servo parameter setting

Set the parameters by referring to the following table.

Servo status	Small ← Medium → Large (10 or less (initial value) 50 or more)	
Thrust at operation	Small	Large
Overload, overcurrent alarm	Hardly occurs	Easily occurs
Magnetic pole detection alarm	Easily occurs	Hardly occurs
Magnetic pole detection accuracy	Low	High

■Setting procedure

1. Detect the magnetic poles, then increase the setting value of [Pr. PL09 Magnetic pole detection voltage level] until [AL. 050 Overload 1], [AL. 051 Overload 2], [AL. 033 Overvoltage], [AL. 0E1 Overload warning 1], and [AL. 0EC Overload warning 2] occur. Increase the setting value by five as a guide value. When these alarms and warnings occur during the magnetic pole detection with MR Configurator2, the test operation of MR Configurator2 automatically completes and the servo-off state is established.
2. Set the value to approximately 70 % of the value which triggers [AL. 050], [AL. 051], [AL. 033], [AL. 0E1], and [AL. 0EC]. If [AL. 027 Initial magnetic pole detection error] occurs with this value, specify a value intermediate between the value set at occurrence of [AL. 050], [AL. 051], [AL. 033], [AL. 0E1], and [AL. 0EC] and the value set at the magnetic pole detection alarm occurrence as the final setting value.
3. Perform the magnetic pole detection again with the final setting value, and make sure that the accuracy of the magnetic pole detection is as required.

■Setting example

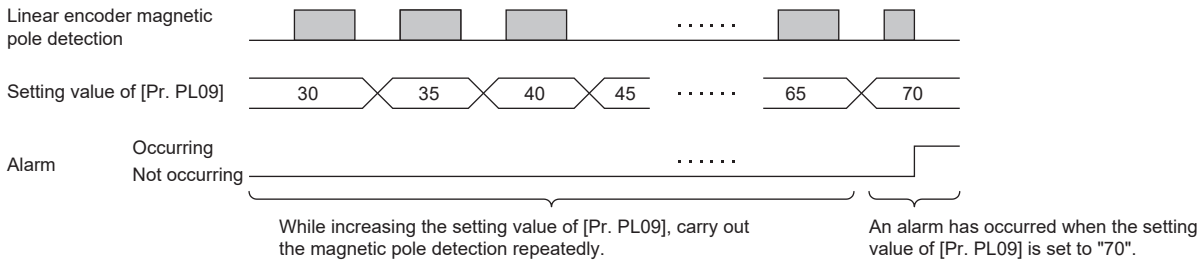

In this example, set the final setting value of [Pr. PL09] to 49 (setting value at the alarm occurrence = 70 × 0.7).

Setting of response performance and load to motor mass ratio by minute position detection method

When using the minute position detection method, set the response performance with [Pr. PL17.0 Response selection], the load to motor mass ratio with [Pr. PL17.1 Load to motor mass ratio/load to motor inertia ratio]. If the load to mass of the linear servo motor primary-side ratio is unknown, perform the magnetic pole detection by the position detection method, and then perform the auto tuning to set an estimated value.

• [Pr. PL17.0 Response selection]

Setting value	Responsiveness
0	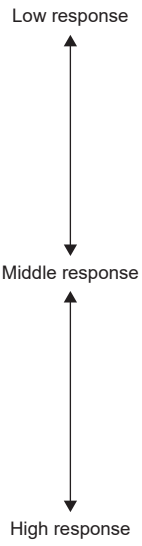
1	
2	
3	
4	
5	
6	
7	
8	
9	
A	
B	
C	
D	
E	
F	

Initial value: 0

• [Pr. PL17.1 Load to motor mass ratio/load to motor inertia ratio selection]

Setting value	Load to motor mass ratio/load to motor inertia ratio
0	10 times or less
1	10 multiplier
2	20 multiplier
3	30 multiplier
4	40 multiplier
5	50 multiplier
6	60 multiplier
7	70 multiplier
8	80 multiplier
9	90 multiplier
A	100 multiplier
B	110 multiplier
C	120 multiplier
D	130 multiplier
E	140 multiplier
F	150 times or more

Initial value: 0

Setting of identification signal amplitude by minute position detection method

If [AL. 032 Overcurrent], [AL. 050 Overload 1], [AL. 051 Overload 2], or [AL. 0E1 Overload warning 1] occurs at the magnetic pole detection by the minute position detection method, set a smaller value for [Pr. PL18 Magnetic pole detection - Minute position detection method - Identification signal amplitude]. Basically, [Pr. PL18] does not need to be changed from the initial value.

Operation at magnetic pole detection

Precautions

- After the magnetic pole detection, check the positioning accuracy with the test operation (positioning operation function) of MR Configurator2.
- When the absolute position linear encoder is used, if a gap is generated to the positional relation between the linear encoder and the linear servo motor, perform the magnetic pole detection again.
- The magnetic pole detection improves in accuracy when performed with no load.

■For incremental encoder

For the incremental linear encoder, the magnetic pole detection is required every time the power is turned on or the software is reset.

By turning on the servo-on command from the controller after the power-on, the magnetic pole detection is automatically carried out. Therefore, there is no need to set [Pr. PL01.0 Servo motor magnetic pole detection selection] for executing magnetic pole detection.

- Timing chart

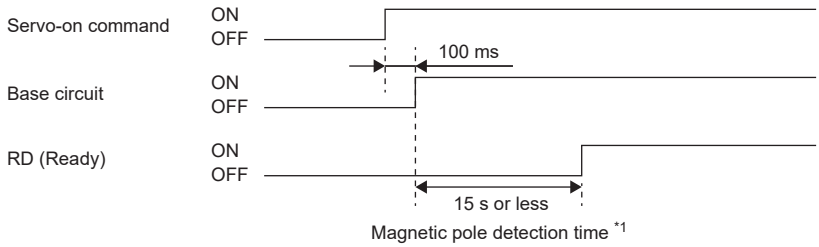

*1 The magnetic pole detection time indicates the operation time when LSP (Forward rotation stroke end) and LSN (Reverse rotation stroke end) are on.

- Linear servo motor movement (when LSP (Forward rotation stroke end) and LSN (Reverse rotation stroke end) are on)

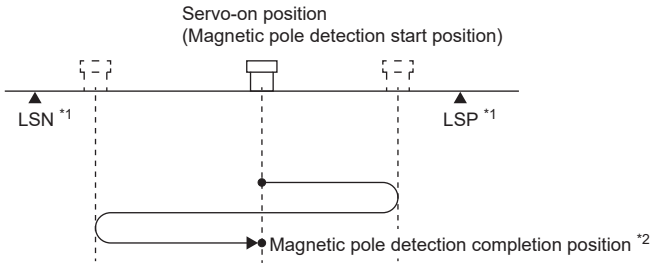

*1 When LSP (Forward rotation stroke end) or LSN (Reverse rotation stroke end) is turned off during the magnetic pole detection, the operation of the magnetic pole detection is carried on to the opposite direction.
When both LSP and LSN are off, [AL. 027 Initial magnetic pole detection error] occurs.

*2 The following shows the pitch against the magnetic pole.

Linear servo motor series	LM-H3 LM-F	LM-U2		LM-K2	LM-AJ	LM-AU
		Medium thrust (Continuous thrust: Less than 400 N)	Large thrust (Continuous thrust: 400 N or more)			
Pitch against magnetic pole [mm]	48	30	60	48	20	60

• Linear servo motor movement (when LSP (Forward rotation stroke end) or LSN (Reverse rotation stroke end) is off)

When LSP or LSN is off at servo-on, the magnetic pole detection is performed as follows.

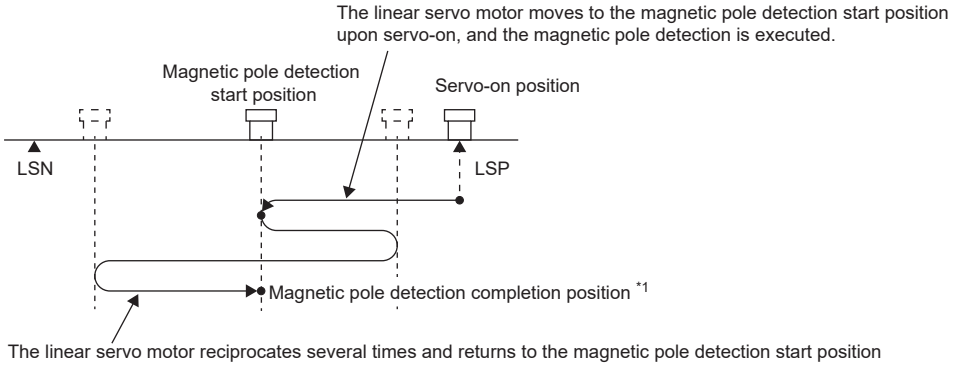

*1 The following shows the pitch against the magnetic pole.

Linear servo motor series	LM-H3 LM-F	LM-U2		LM-K2	LM-AJ	LM-AU
		Medium thrust (Continuous thrust: Less than 400 N)	Large thrust (Continuous thrust: 400 N or more)			
Pitch against magnetic pole [mm]	48	30	60	48	20	60

■For absolute position linear encoder

The magnetic pole detection is required in the following cases.

- When the system is set up (at initial startup of equipment)
- After a servo amplifier is replaced
- After a linear servo motor (primary-side or secondary-side) is replaced
- After a linear encoder (scale or head) is replaced or remounted

If a gap is generated to the positional relation between the linear encoder and the linear servo motor, perform the magnetic pole detection again.

1. Execute the magnetic pole detection.

☞ Page 505 Operation at magnetic pole detection

☞ Page 505 For incremental encoder

2. After the completion of the magnetic pole detection, change [Pr. PL01.0 Servo motor magnetic pole detection selection] to "0" (magnetic pole detection disabled).

Servo parameter	Description
PL01.0	Servo motor magnetic pole detection selection 0: Magnetic pole detection disabled 1: Magnetic pole detection at initial servo-on after cycling the power 5: Magnetic pole detection at every servo-on Initial value: 1 (magnetic pole detection at initial servo-on after cycling the power)

When [Pr. PL01.0] is set to "0" (magnetic pole detection disabled) after the magnetic pole detection, the magnetic pole detection at each power-on is not required.

How to replace servo amplifier without magnetic pole detection

Refer to the following.

☞ Page 507 How to replace servo amplifier without magnetic pole detection

11.4 Basic functions

Operation from controller

For the incremental system, the magnetic pole detection is automatically performed at the first servo-on after power-on. Before performing the positioning operation, check that the servo amplifier is in servo-on status.

Setting the number of pulses (AP) and travel distance (AL)

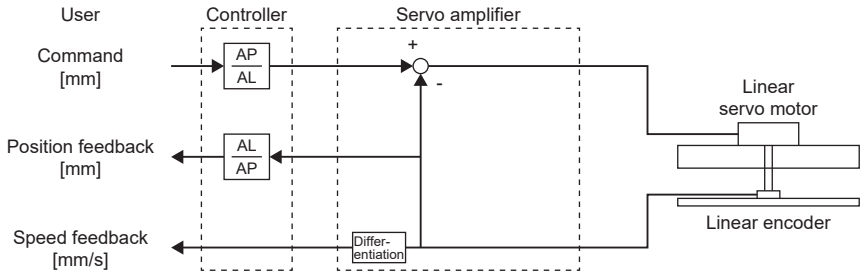

Calculate the number of linear encoder pulses (AP) and travel distance (AL) with the following condition.
Linear encoder resolution 0.05 μm

$$\frac{\text{Number of pulses (AP) [pulse]}}{\text{Travel distance (AL) [μm]}} = \frac{1}{0.05} = \frac{20}{1}$$

Homing [G]

Precautions

- The incremental linear encoder and the absolute position linear encoder have different reference home positions at homing.
- For the incremental linear encoder, a home position (reference mark) of the linear encoder is necessary in the homing direction.
- To execute homing securely in the following example, move the linear servo motor to LSN with an operation such as the JOG operation, then start homing.

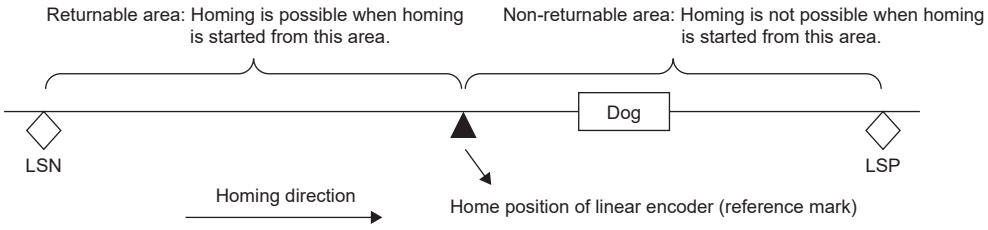

Homing setting method

■Incremental linear encoder

• Interval setting of homing

When an incremental linear encoder is used, the home position is the position per 1048576 pulses (changeable with [Pr. PL01.2 Homing stop interval setting]) with reference to the linear encoder home position (reference mark) that passed through first after a homing start. Change the setting value of [Pr. PL01] according to the linear encoder resolution.

Servo parameter	Description
PL01.2	Homing stop interval setting 0: 2^{13} (= 8192) pulses 1: 2^{17} (= 131072) pulses 2: 2^{18} (= 262144) pulses 3: 2^{20} (= 1048576) pulses 4: 2^{22} (= 4194304) pulses 5: 2^{24} (= 16777216) pulses 6: 2^{26} (= 67108864) pulses 7: 2^{30} (= 1073741824) pulses Initial value: 3 (2^{20} (= 1048576) pulses)

The following shows the relation between the stop interval at the homing and the linear encoder resolution. For example, when the linear encoder resolution is 0.001 µm and [Pr. PL01.2 Homing stop interval setting] = "5" (16777216 pulses), the linear encoder resolution is 16.777 mm.

[Unit: mm]

Pr. PL01.2	Stop interval [pulse]	Linear encoder resolution				
		0.001 µm	0.005 µm	0.01 µm	0.02 µm	0.05 µm
0	8192	0.008	0.041	0.082	0.164	0.410
1	131072	0.131	0.655	1.311	2.621	6.554
2	262144	0.262	1.311	2.621	5.243	13.107 (Recommended value)
3	1048576	1.049	5.243	10.486 (Recommended value)	20.972 (Recommended value)	52.429
4	4194304	4.194	20.972 (Recommended value)	41.943	83.886	209.715
5	16777216	16.777 (Recommended value)	83.886	167.772	335.544	838.861
6	67108864	67.109	335.544	671.089	1342.177	3355.443
7	1073741824	1073.742	5368.700	10737.418	21474.836	53687.091

Pr. PL01.2	Stop interval [pulse]	Linear encoder resolution				
		0.1 µm	0.2 µm	0.5 µm	1 µm	2 µm
0	8192	0.819	1.638	4.096 (Recommended value)	8.192 (Recommended value)	16.384 (Recommended value)
1	131072	13.107 (Recommended value)	26.214 (Recommended value)	65.536	131.072	262.144
2	262144	26.214	52.429	131.072	262.144	524.288
3	1048576	104.858	209.715	524.288	1048.576	2097.152
4	4194304	419.430	838.861	2097.152	4194.304	8388.608
5	16777216	1677.722	3355.443	8388.608	16777.216	33554.432
6	67108864	6710.886	13421.773	33554.432	67108.864	134217.728
7	1073741824	107374.182	214748.364	536870.912	1073741.824	2147483.648

• Multipoint Z-phase input - Function selection

When two or more reference marks exist during the full stroke of the linear encoder, set "1" (enabled) in [Pr. PC17.1 Linear encoder multipoint Z-phase input function selection].

■Absolute position linear encoder

The reference home position using an absolute position linear encoder is per 1048576 pulses based on the linear encoder home position (absolute position data = 0). The stop intervals at homing can be changed with [Pr. PL01.2 Homing stop interval setting]. For the specifications of the stop intervals at homing, refer to the following.

☞ Page 520 Incremental linear encoder

The specifications are the same as the ones when an incremental encoder is used.

Homing operation

Precautions

- To execute homing securely, move the linear servo motor to the opposite stroke end with the JOG operation from the controller or by other means, then start homing.
- Change the setting value of [Pr. PL01.2 Homing stop interval setting] in accordance with the linear encoder resolution.

■Incremental linear encoder

- When the linear encoder home position (reference mark) exists in the homing direction

The position obtained by moving the home position shift distance from the linear encoder home position (reference mark) is set as the home position.

Ex.

Homing methods 33 and 34

The following figure shows the operation of Homing method 34. The operation of Homing method 33 is opposite to that of Homing method 34.

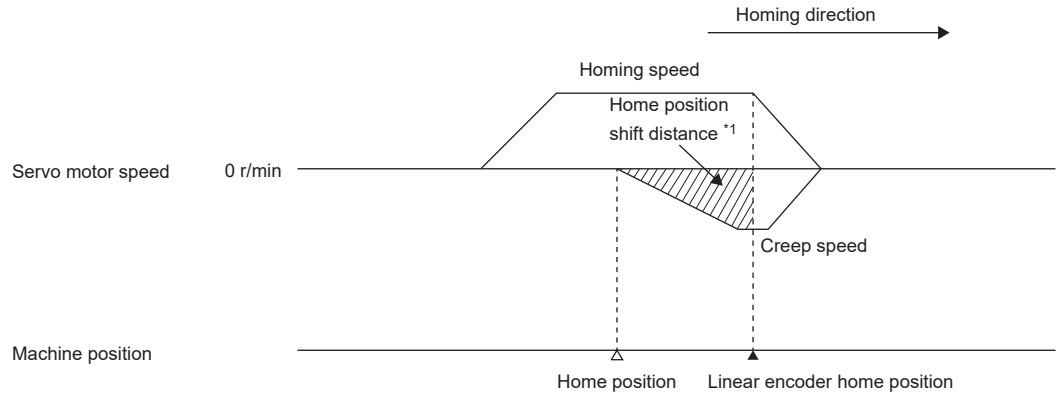

*1 Home position shift distance can be changed with [Pr. PT07 Home position shift distance].

When the stroke end is detected

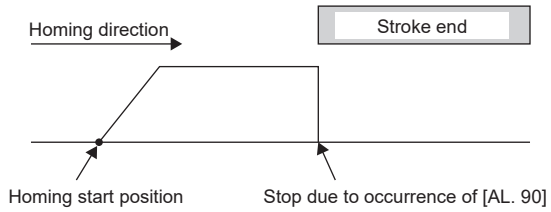

Ex.

Homing methods -11 and -43

The following figure shows the operation of Homing method -11. The operation of Homing method -43 is opposite to that of Homing method -11.

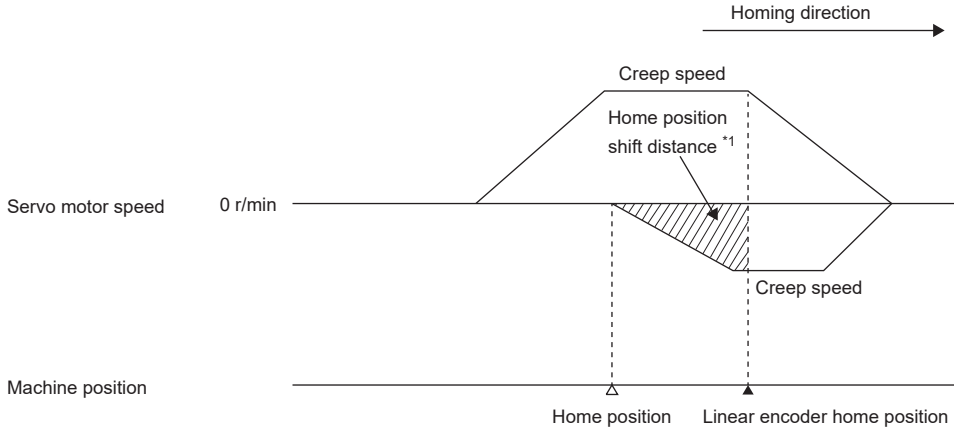

*1 Home position shift distance can be changed with [Pr. PT07 Home position shift distance].

When the servo motor returns at the stroke end

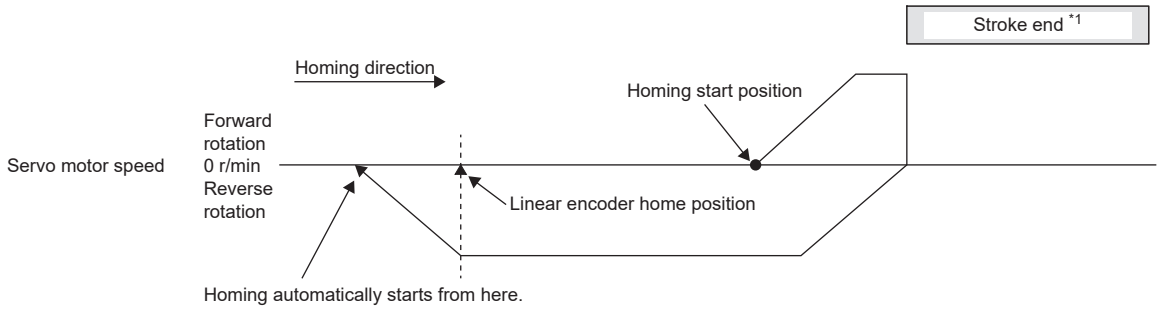

*1 This cannot be used with the software limit.

• When the linear encoder home position does not exist in the homing direction

If the homing is performed from the position where the linear encoder home position does not exist in the homing direction, an error may occur. If an error occurs, change the homing method or temporarily move the servo motor to the stroke end opposite of homing with the JOG operation or other methods from the controller, then perform homing.

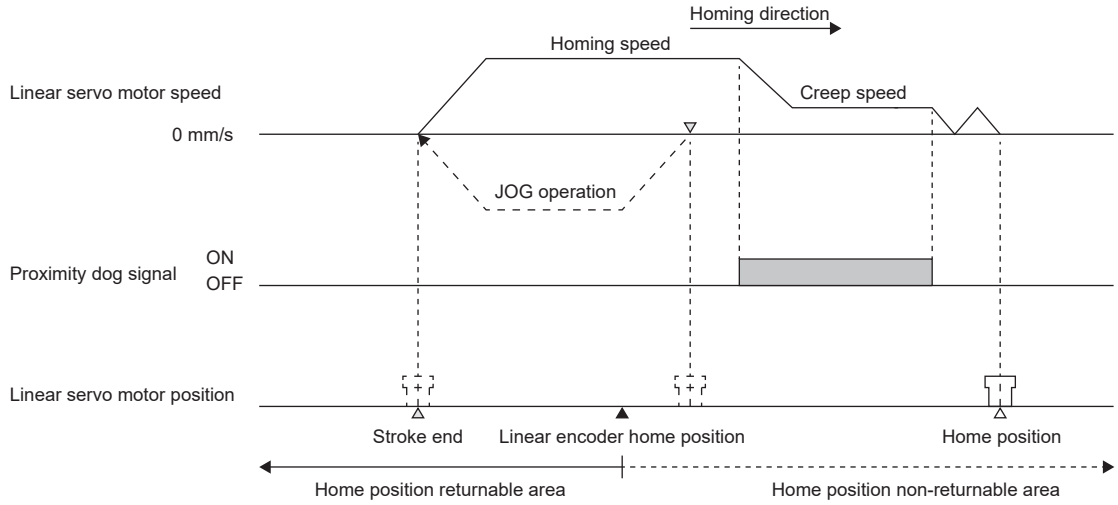

• Caution for passing the home position (reference mark)

An interval for turning on home position (reference mark) signal of the linear encoder has a certain width. (Specifications differ depending on the linear encoder.)

MR-J5 Partner's Encoder User's Manual

Example: When the Z-phase is recognized at startup

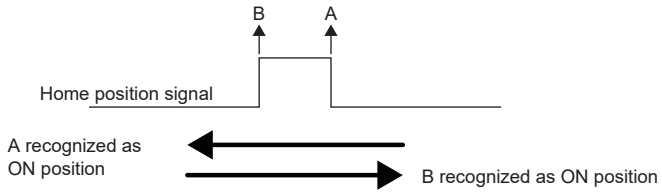

The position where LZ (Encoder Z-phase pulse) is turned on depends on the direction of home position passing. In cases where each homing is required to be completed at the same position, such as dog type homing, start homing with the same direction.

• Point to note for linear encoder without home position (reference mark)

For the linear encoder without home position (reference mark), LZ (Encoder Z-phase pulse) of the servo amplifier is not output. Check the specifications of the controller for whether LZ (Encoder Z-phase pulse) is necessary or not for homing.

■Absolute position linear encoder

When using an absolute position linear encoder, the data set type homing can also be carried out.

• For proximity dog type homing

For a proximity dog type homing, the nearest reference home position after proximity dog off is the home position. The linear encoder home position can be set in any position. LZ (Encoder Z-phase pulse) is output based on the set value of [Pr. PL01.2 Homing stop interval setting].

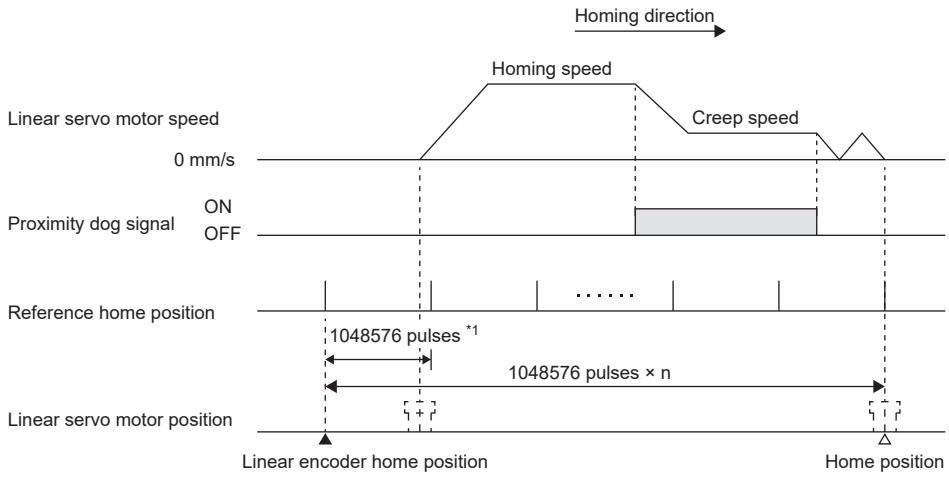

*1 This can be changed with [Pr. PL01].

Homing [B]

Precautions

- The incremental linear encoder and the absolute position linear encoder have different reference home positions at homing.
- For the incremental linear encoder, a home position (reference mark) of the linear encoder is necessary in the homing direction.
- To execute homing securely in the following example, move the linear servo motor to RLS with an operation such as the JOG operation, then start homing.

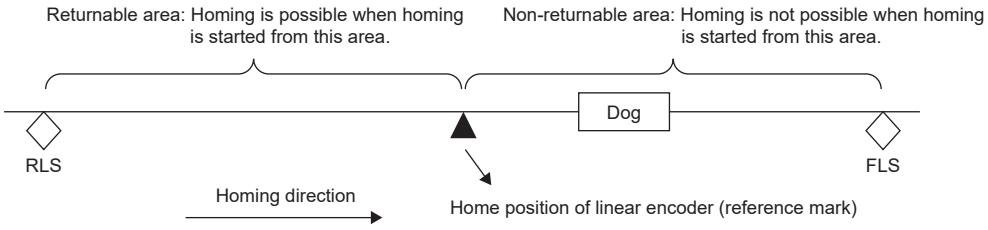

Homing setting method

■Incremental linear encoder

• Interval setting of homing

When an incremental linear encoder is used, the home position is the position per 1048576 pulses (changeable with [Pr. PL01.2 Homing stop interval setting]) with reference to the linear encoder home position (reference mark) that passed through first after a homing start. Change the setting value of [Pr. PL01] according to the linear encoder resolution.

Servo parameter	Description
PL01.2	Homing stop interval setting 0: 2^{13} (= 8192) pulses 1: 2^{17} (= 131072) pulses 2: 2^{18} (= 262144) pulses 3: 2^{20} (= 1048576) pulses 4: 2^{22} (= 4194304) pulses 5: 2^{24} (= 16777216) pulses 6: 2^{26} (= 67108864) pulses 7: 2^{30} (= 1073741824) pulses Initial value: 3 (2^{20} (= 1048576) pulses)

The following shows the relation between the stop interval at the homing and the linear encoder resolution. For example, when the linear encoder resolution is 0.001 µm and [Pr. PL01.2 Homing stop interval setting] = "5" (16777216 pulses), the linear encoder resolution is 16.777 mm.

[Unit: mm]

Pr. PL01.2	Stop interval [pulse]	Linear encoder resolution				
		0.001 µm	0.005 µm	0.01 µm	0.02 µm	0.05 µm
0	8192	0.008	0.041	0.082	0.164	0.410
1	131072	0.131	0.655	1.311	2.621	6.554
2	262144	0.262	1.311	2.621	5.243	13.107 (Recommended value)
3	1048576	1.049	5.243	10.486 (Recommended value)	20.972 (Recommended value)	52.429
4	4194304	4.194	20.972 (Recommended value)	41.943	83.886	209.715
5	16777216	16.777 (Recommended value)	83.886	167.772	335.544	838.861
6	67108864	67.109	335.544	671.089	1342.177	3355.443
7	1073741824	1073.742	5368.700	10737.418	21474.836	53687.091

Pr. PL01.2	Stop interval [pulse]	Linear encoder resolution				
		0.1 µm	0.2 µm	0.5 µm	1 µm	2 µm
0	8192	0.819	1.638	4.096 (Recommended value)	8.192 (Recommended value)	16.384 (Recommended value)
1	131072	13.107 (Recommended value)	26.214 (Recommended value)	65.536	131.072	262.144
2	262144	26.214	52.429	131.072	262.144	524.288
3	1048576	104.858	209.715	524.288	1048.576	2097.152
4	4194304	419.430	838.861	2097.152	4194.304	8388.608
5	16777216	1677.722	3355.443	8388.608	16777.216	33554.432
6	67108864	6710.886	13421.773	33554.432	67108.864	134217.728
7	1073741824	107374.182	214748.364	536870.912	1073741.824	2147483.648

• Multipoint Z-phase input - Function selection

When two or more reference marks exist during the full stroke of the linear encoder, set "1" (enabled) in [Pr. PC17.1 Linear encoder multipoint Z-phase input function selection].

■Absolute position linear encoder

The reference home position using an absolute position linear encoder is per 1048576 pulses based on the linear encoder home position (absolute position data = 0). The stop intervals at homing can be changed with [Pr. PL01.2 Homing stop interval setting]. For the specifications of the stop intervals at homing, refer to the following.

☞ Page 520 Incremental linear encoder

The specifications are the same as the ones when an incremental encoder is used.

Homing operation

Precautions

- To execute homing securely, move the linear servo motor to the opposite stroke limit with the JOG operation from the controller or by other means, then start homing.
- Change the setting value of [Pr. PL01.2 Homing stop interval setting] in accordance with the linear encoder resolution.

■Incremental linear encoder

- When the linear encoder home position (reference mark) exists in the homing direction

For a proximity dog type homing, the nearest reference home position after proximity dog off is the home position.
Set one linear encoder home position in the full stroke, and set it in the position to be passed after the homing start. LZ (Encoder Z-phase pulse) cannot be used.

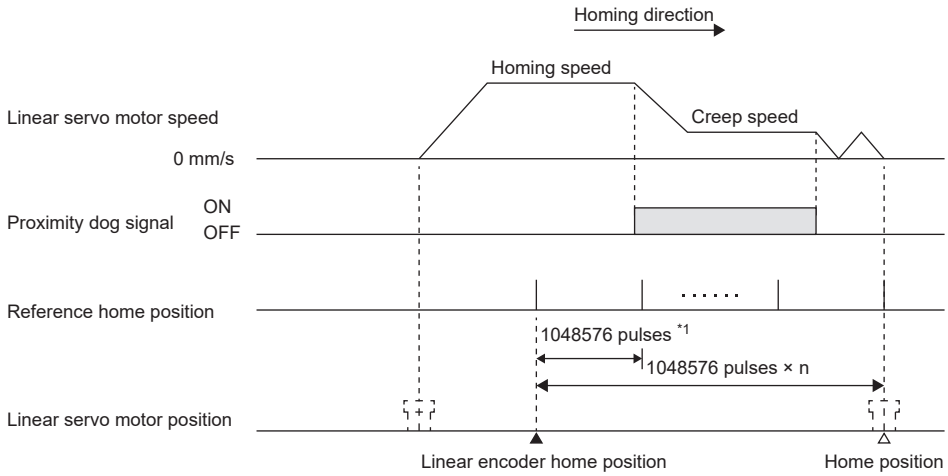

*1 This can be changed with [Pr. PL01].

- When the linear encoder home position does not exist in the homing direction

If homing is performed from a position where the linear encoder home position does not exist in the homing direction, a homing error may occur in the controller depending on the homing method. Error details differ depending on the controller being used. If an error occurs, move the linear servo motor to the stroke end on the opposite side of the homing direction with operations such as the JOG operation from the controller, then start homing.

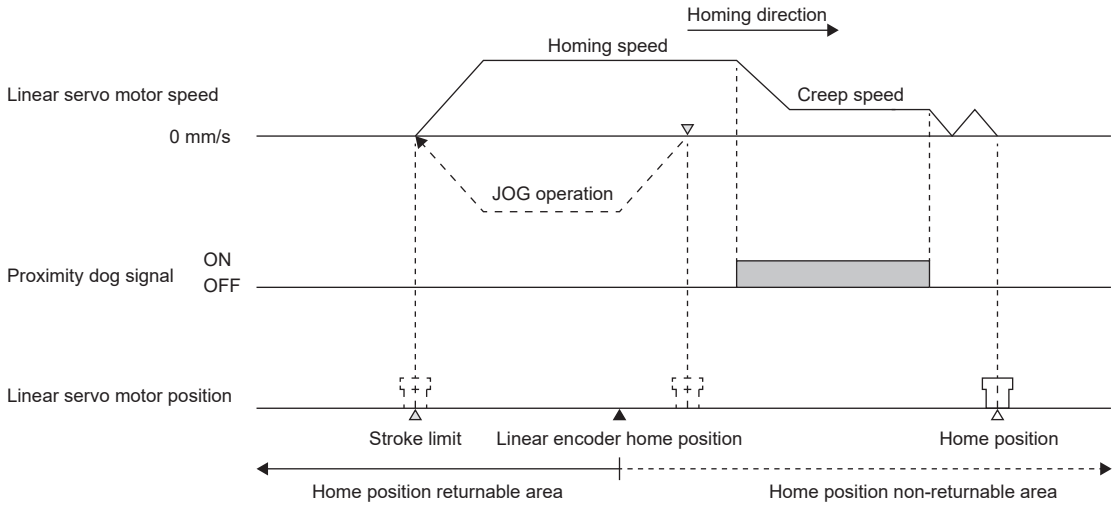

• Caution for passing the home position (reference mark)

An interval for turning on home position (reference mark) signal of the linear encoder has a certain width. (Specifications differ depending on the linear encoder.)

MR-J5 Partner's Encoder User's Manual

Example: When the Z-phase is recognized at startup

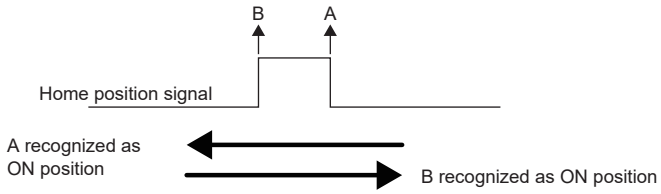

The position where LZ (Encoder Z-phase pulse) is turned on depends on the direction of home position passing. In cases where each homing is required to be completed at the same position, such as dog type homing, start homing with the same direction.

• Point to note for linear encoder without home position (reference mark)

For the linear encoder without home position (reference mark), LZ (Encoder Z-phase pulse) of the servo amplifier is not output. Check the specifications of the controller for whether LZ (Encoder Z-phase pulse) is necessary or not for homing.

■Absolute position linear encoder

When using an absolute position linear encoder, the data set type homing can also be carried out.

• For proximity dog type homing

For a proximity dog type homing, the nearest reference home position after proximity dog off is the home position. The linear encoder home position can be set in any position. LZ (Encoder Z-phase pulse) is output based on the set value of [Pr. PL01.2 Homing stop interval setting].

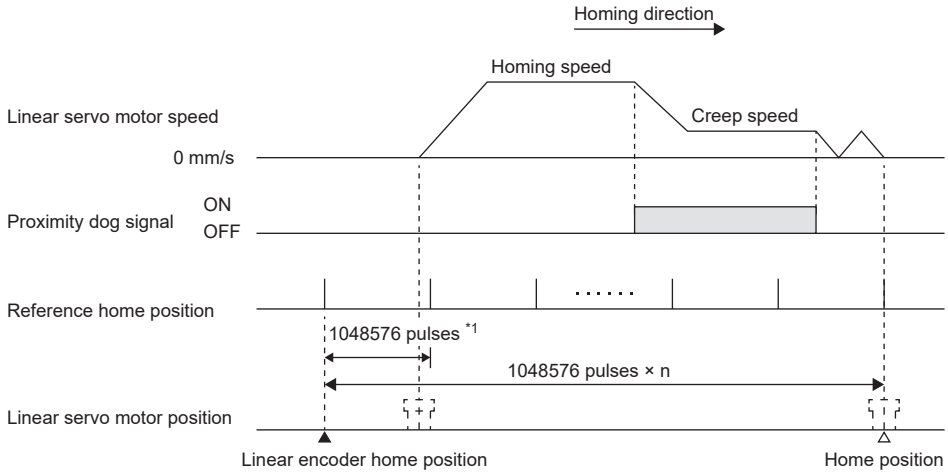

*1 This can be changed with [Pr. PL01].

Homing [A]

Precautions

- The incremental linear encoder and the absolute position linear encoder have different reference home positions at homing.
- For the incremental linear encoder, a home position (reference mark) of the linear encoder is necessary in the homing direction.
- To execute homing securely in the following example, move the linear servo motor to LSN with an operation such as the JOG operation, then start homing.

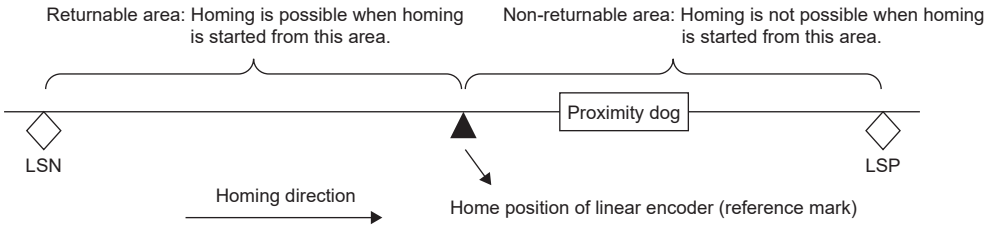

Homing setting method

■Incremental linear encoder

• Interval setting of homing

When an incremental linear encoder is used, the home position is the position per 1048576 pulses (changeable with [Pr. PL01.2 Homing stop interval setting]) with reference to the linear encoder home position (reference mark) that passed through first after a homing start. Change the setting value of [Pr. PL01.2] according to the linear encoder resolution.

Servo parameter	Description
PL01.2	Homing stop interval setting 0: 2^{13} (= 8192) pulses 1: 2^{17} (= 131072) pulses 2: 2^{18} (= 262144) pulses 3: 2^{20} (= 1048576) pulses 4: 2^{22} (= 4194304) pulses 5: 2^{24} (= 16777216) pulses 6: 2^{26} (= 67108864) pulses 7: 2^{30} (= 1073741824) pulses Initial value: 3 (2^{20} (= 1048576) pulses)

The following shows the relation between the stop interval at the homing and the linear encoder resolution. For example, when the linear encoder resolution is 0.001 µm and [Pr. PL01.2 Homing stop interval setting] = "5" (16777216 pulses), the linear encoder resolution is 16.777 mm.

[Unit: mm]

Pr. PL01.2	Stop interval [pulse]	Linear encoder resolution				
		0.001 µm	0.005 µm	0.01 µm	0.02 µm	0.05 µm
0	8192	0.008	0.041	0.082	0.164	0.410
1	131072	0.131	0.655	1.311	2.621	6.554
2	262144	0.262	1.311	2.621	5.243	13.107 (Recommended value)
3	1048576	1.049	5.243	10.486 (Recommended value)	20.972 (Recommended value)	52.429
4	4194304	4.194	20.972 (Recommended value)	41.943	83.886	209.715
5	16777216	16.777 (Recommended value)	83.886	167.772	335.544	838.861
6	67108864	67.109	335.544	671.089	1342.177	3355.443
7	1073741824	1073.742	5368.700	10737.418	21474.836	53687.091

Pr. PL01.2	Stop interval [pulse]	Linear encoder resolution				
		0.1 µm	0.2 µm	0.5 µm	1 µm	2 µm
0	8192	0.819	1.638	4.096 (Recommended value)	8.192 (Recommended value)	16.384 (Recommended value)
1	131072	13.107 (Recommended value)	26.214 (Recommended value)	65.536	131.072	262.144
2	262144	26.214	52.429	131.072	262.144	524.288
3	1048576	104.858	209.715	524.288	1048.576	2097.152
4	4194304	419.430	838.861	2097.152	4194.304	8388.608
5	16777216	1677.722	3355.443	8388.608	16777.216	33554.432
6	67108864	6710.886	13421.773	33554.432	67108.864	134217.728
7	1073741824	107374.182	214748.364	536870.912	1073741.824	2147483.648

• Multipoint Z-phase input - Function selection

When two or more reference marks exist in the full stroke of the linear encoder, set "1" (enabled) in [Pr. PC28.3 Linear encoder multipoint Z-phase input function selection].

■Absolute position linear encoder

The reference home position using an absolute position linear encoder is per 1048576 pulses based on the linear encoder home position (absolute position data = 0). The stop intervals at homing can be changed with [Pr. PL01.2 Homing stop interval setting]. For the specifications of the stop intervals at homing, refer to the following.

☞ Page 520 Homing setting method

The specifications are the same as the ones when an incremental encoder is used.

Homing operation

Precautions

- To execute homing securely, move the linear servo motor to the opposite stroke end with the JOG operation from the controller or by other means, then start homing.
- Change the setting value of [Pr. PL01.2 Homing stop interval setting] in accordance with the linear encoder resolution.

■Incremental linear encoder

- When the linear encoder home position (reference mark) exists in the homing direction

In the case of a dog type homing, after the proximity dog signal rear end is detected, the nearest reference home position shifted by the home position shift distance is used as the home position.
Set one linear encoder home position in the full stroke, and set it in the proximity dog signal detection position.

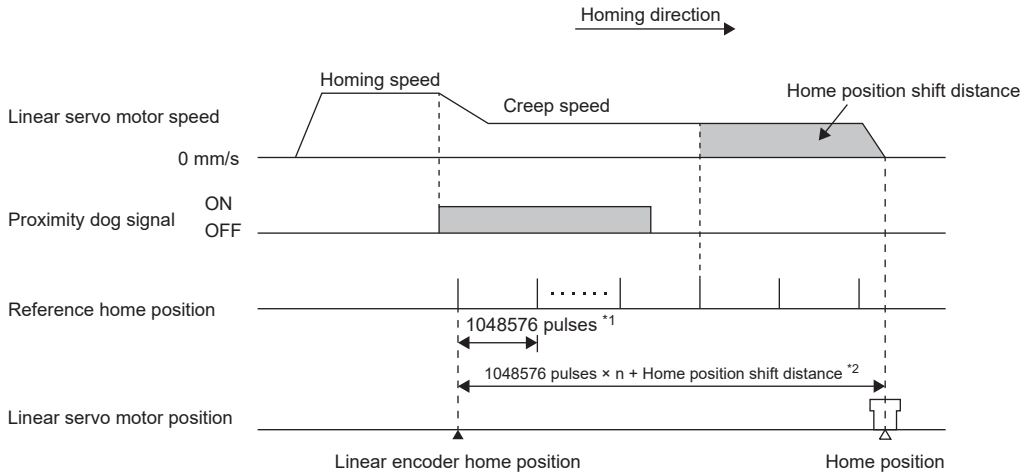

*1 This can be changed with [Pr. PL01].
*2 Home position shift distance can be changed with [Pr. PT07].

- When the linear encoder home position does not exist in the homing direction

If the homing is performed from the position where the linear encoder home position does not exist in the homing direction, an error may occur. If an error occurs, change the homing method or move the linear servo motor to the stroke end on the opposite side of the homing direction with operations such as the JOG operation from the controller, then start homing.

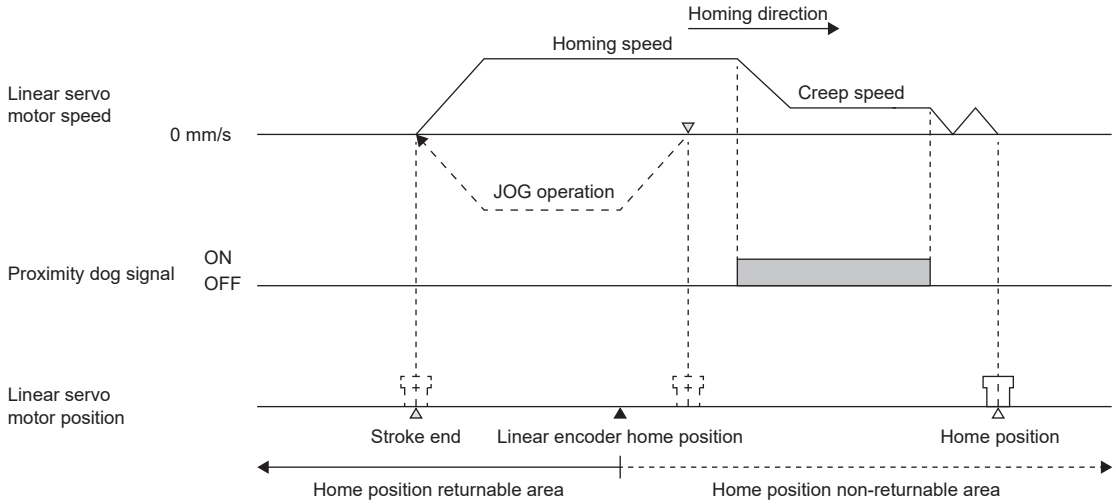

• Caution for passing the home position (reference mark)

An interval for turning on home position (reference mark) signal of the linear encoder has a certain width. (Specifications differ depending on the linear encoder.)

MR-J5 Partner's Encoder User's Manual

Example: When the Z-phase is recognized at startup

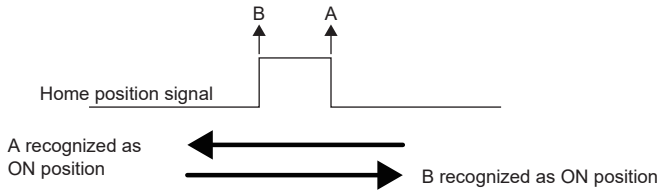

The position where LZ (Encoder Z-phase pulse) is turned on depends on the direction of home position passing. In cases where each homing is required to be completed at the same position, such as dog type homing, start homing with the same direction.

• Point to note for linear encoder without home position (reference mark)

For the linear encoder without home position (reference mark), LZ (Encoder Z-phase pulse) of the servo amplifier is not output. Check the specifications of the controller for whether LZ (Encoder Z-phase pulse) is necessary or not for homing.

■Absolute position linear encoder

When using an absolute position linear encoder, the data set type homing can also be carried out.

• For proximity dog type homing

For a proximity dog type homing, the nearest reference home position after proximity dog off is the home position. The linear encoder home position can be set in any position. LZ (Encoder Z-phase pulse) is output based on the set value of [Pr. PL01.2 Homing stop interval setting].

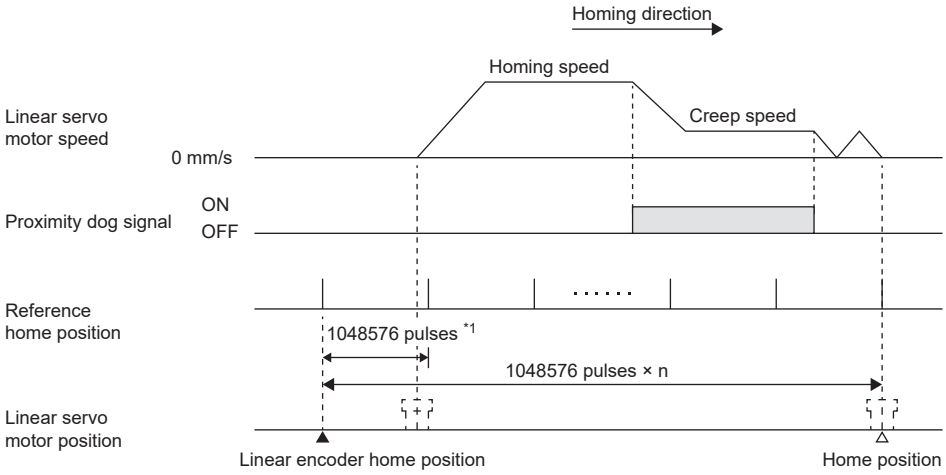

*1 This can be changed with [Pr. PL01].

• For data set type homing

For data set type homing, when CR (Clear) is turned on, the position control counter is cleared and the current position is stored in the non-volatile memory (backup memory) as home position data.

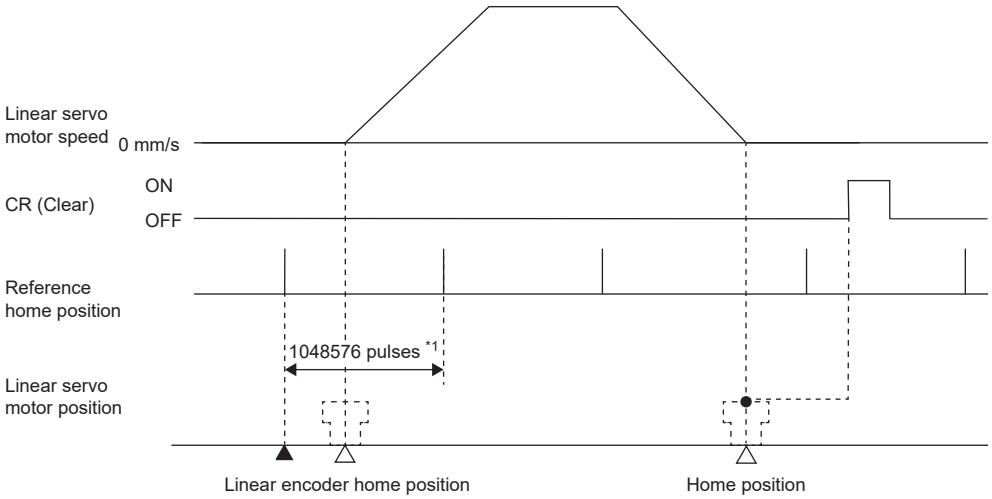

*1 This can be changed with [Pr. PL01].

Linear servo control error detection function

If the linear servo control becomes unstable for some reason, the linear servo motor may not operate properly. To detect this state and to stop operation, the linear servo control error detection function is used as a protective function.
The linear servo control error detection function has three types of detection methods: the position deviation, speed deviation, and thrust deviation. An error is detected when each method is enabled with [Pr. PL04.0 [AL. 042 Servo control error] detection function selection]. The detection level can be changed with [Pr. PL05 Position deviation error detection level], [Pr. PL06 Speed deviation error detection level], and [Pr. PL07 Torque deviation error detection level].

Precautions

- For the linear servo control error detection function, the position and speed deviation error detections are enabled before shipping. ([Pr. PL04.0]: 3)

Linear servo control error detection selection function

Select the linear servo control error detection function.

- [Pr. PL04.0 [AL. 042 Servo control error] detection function selection]

Refer to the following table.

Setting value	Position deviation error detection	Speed deviation error detection	Thrust deviation error detection
1	Enabled	Disabled	Disabled
2	Disabled	Enabled	Disabled
3	Enabled	Enabled	Disabled
4	Disabled	Disabled	Enabled
5	Enabled	Disabled	Enabled
6	Disabled	Enabled	Enabled
7	Enabled	Enabled	Enabled

Initial value: 3

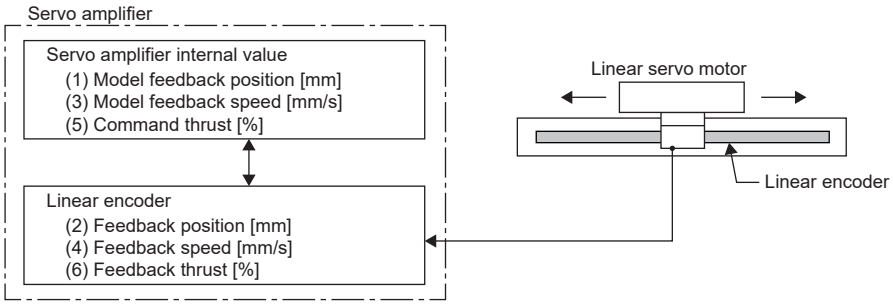

■Position deviation error detection

Set [Pr. PL04.0 [AL. 042 Servo control error] detection function selection] to "1" to enable the position deviation error detection.

Servo parameter	Description
PL04.0	[AL. 042 Servo control error] detection function selection 1: Position deviation error detection enabled

If the difference between the model feedback position (1) and the feedback position (2) in the figure is equal to or more than the value of [Pr. PL05 Position deviation error detection level] (1 mm to 1000 mm), [AL. 042.1 Servo control error based on position deviation] will occur and the linear servo motor will stop. The initial value of this detection level is 50 mm. Change the setting value as necessary.

■Speed deviation error detection

Set [Pr. PL04.0] to "2" to enable the speed deviation error detection.

Servo parameter	Description
PL04.0	[AL. 042 Servo control error] detection function selection 2: Speed deviation error detection enabled

If the difference between the model feedback speed (3) and the feedback speed (4) in the figure is equal to or more than the value of [Pr. PL06 Speed deviation error detection level] (1 mm/s to 5000 mm/s), [AL. 042.2 Servo control error based on speed deviation] will occur and the linear servo motor will stop. The initial value of this detection level is 1000 mm/s. Change the setting value as necessary.

■Thrust deviation error detection

Set [Pr. PL04.0] to "4" to enable the thrust deviation error detection.

Servo parameter	Description
PL04.0	[AL. 042 Servo control error] detection function selection 4: Thrust deviation error detection enabled

If the difference between the command thrust (5) and the feedback thrust (6) in the figure is equal to or more than the value of [Pr. PL07 Torque/thrust deviation error detection level] (1 % to 1000 %), [AL. 042.3 Servo control error based on torque/thrust deviation] will occur and the linear servo motor will stop. The initial value of this detection level is 100 %. Change the setting value as necessary.

■Detecting multiple deviation errors

When [Pr. PL04.0 [AL. 042 Servo control error] detection function selection] is set as follows, multiple deviation errors can be detected. Refer to the following for the error detection method.

☞ Page 535 Position deviation error detection
☞ Page 536 Speed deviation error detection
☞ Page 536 Thrust deviation error detection

• [Pr. PL04.0 [AL. 042 Servo control error] detection function selection]

Setting value	Position deviation error detection	Speed deviation error detection	Thrust deviation error detection
1	○	—	—
2	—	○	—
3	○	○	—
4	—	—	○
5	○	—	○
6	—	○	○
7	○	○	○

Initial value: 3

Linear servo control error controller reset condition selection

Select the reset condition of the linear servo control error.

Servo parameter	Description
PL04.3	[AL. 042 Servo control error] detection controller reset condition selection 0: Reset disabled (reset by powering off/on or software reset enabled) 1: Reset enabled Initial value: 0 (Reset disabled)

When [Pr. PL04.3 [AL. 042 Servo control error] detection controller reset condition selection] is set to "1" (reset enabled), [AL. 042.1 Servo control error based on position deviation], [AL. 042.2 Servo control error based on speed deviation], and [AL. 042.3 Servo control error based on torque/thrust deviation] can be canceled by resetting the controller. When [Pr. PL04.3] is "0" (reset disabled (reset by powering off/on or software reset enabled)), [AL. 042.1], [AL. 042.2], and [AL. 042.3] can be canceled only by cycling the servo amplifier power or resetting the software.

About MR Configurator2

With MR Configurator2, the servo parameters can be checked if set correctly, and the servo motor and the load-side encoder can be checked if operated properly.

This section explains the Linear Diagnosis screen.

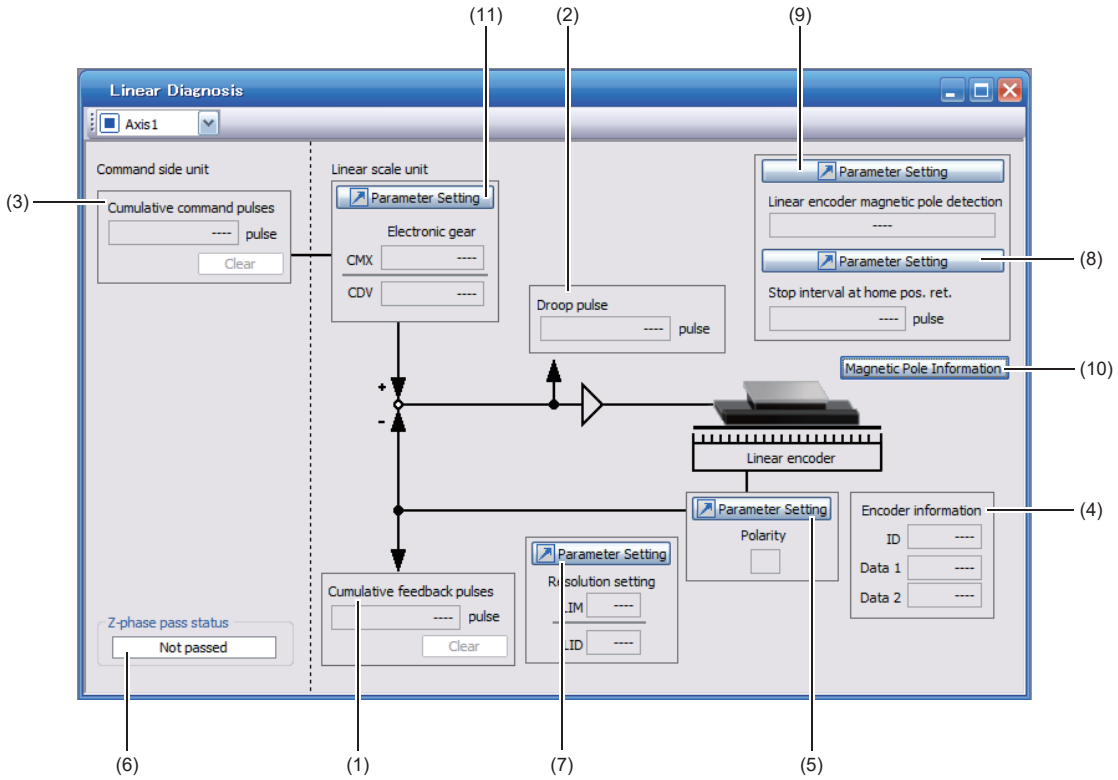

Symbol	Name	Explanation	Unit
(1)	Cumulative feedback pulses	Feedback pulses from the linear encoder are counted and displayed. The displayed value returns to "0" when "999999999" is exceeded. Click "Clear" to reset the value to "0". In reverse rotation, the value is negative.	pulse
(2)	Droop pulse	Droop pulses of the deviation counter between a linear servo motor-side position and a command are displayed. In reverse rotation, the value is negative.	pulse
(3)	Cumulative command pulses	Position command input pulses are counted and displayed. Click "Clear" to reset the value to "0". Under reverse command, the value is negative.	pulse
(4)	Encoder information	The linear encoder information is displayed. The display contents differ depending on the linear encoder type. • ID: The ID No. of the linear encoder is displayed. • Data 1: For an incremental type linear encoder, the counter from powering on is displayed. For an absolute position type linear encoder, absolute position data is displayed. • Data 2: For the incremental type linear encoder, the distance (number of pulses) from the reference mark (Z-phase) is displayed. For the absolute position type linear encoder, "00000000" is displayed.	—
(5)	Polarity	For the address increasing direction in the linear servo motor positive direction, "+" is displayed, and for the address decreasing direction in the linear servo motor negative direction, "-" is displayed.	—
(6)	Z-phase pass status	The Z-phase pass status of the linear encoder is displayed.	—
(7)	Parameter Setting (Resolution setting)	The servo parameters for the resolution of the linear encoder ([Pr. PL02] and [Pr. PL03]) can be displayed and set. ☞ Page 498 Servo parameter setting	—
(8)	Parameter Setting (Homing stop interval)	The servo parameter for the homing can be displayed and set.	—
(9)	Parameter Setting (Linear encoder magnetic pole detection)	The servo parameter for the magnetic pole detection can be displayed and set.	—

Symbol	Name	Explanation	Unit
(10)	Magnetic Pole Information	The magnetic pole information can be displayed and set.	—
(11)	Parameter Setting (Electronic gear)	The servo parameters for the electronic gear ([Pr. PA06] and [Pr. PA07]) can be displayed and set.	—

11.5 Adjustment

Auto tuning function

Although the auto tuning function during the linear servo motor operation is the same as that of the rotary servo motor, the calculation method of the load to motor mass ratio (J ratio) is different. The load to motor mass ratio (J ratio) on the linear servo motor is calculated by dividing the load mass by the mass of the linear servo motor primary side.

Ex.

Mass of linear servo motor primary side = 2 kg

Load mass (excluding the mass of the linear servo motor primary side) = 4 kg

Mass ratio = 4/2 = 2 times

For other servo parameters set with the auto tuning function, refer to "Auto tuning mode 1" and "Auto tuning mode 2" in the following manual.

MR-J5 User's Manual (Adjustment)

Precautions for the auto tuning function

If the following conditions are not satisfied, the auto tuning mode 1 may not operate properly.

- Time to reach 2000 mm/s is the acceleration/deceleration time constant of 5 s or less.
- The linear servo motor speed is 50 mm/s or higher.
- The load to mass of the linear servo motor primary-side ratio is 100 times or less.
- The acceleration/deceleration thrust is 10 % or higher of the continuous thrust.

Machine analyzer function

Perform the machine analyzer function after the magnetic pole detection. If the magnetic pole detection is not performed, the machine analyzer function may not operate properly.

The stop position at the completion of the machine analyzer function is arbitrary.

11.6 Characteristics

Overload protection characteristics

LM-H3 series

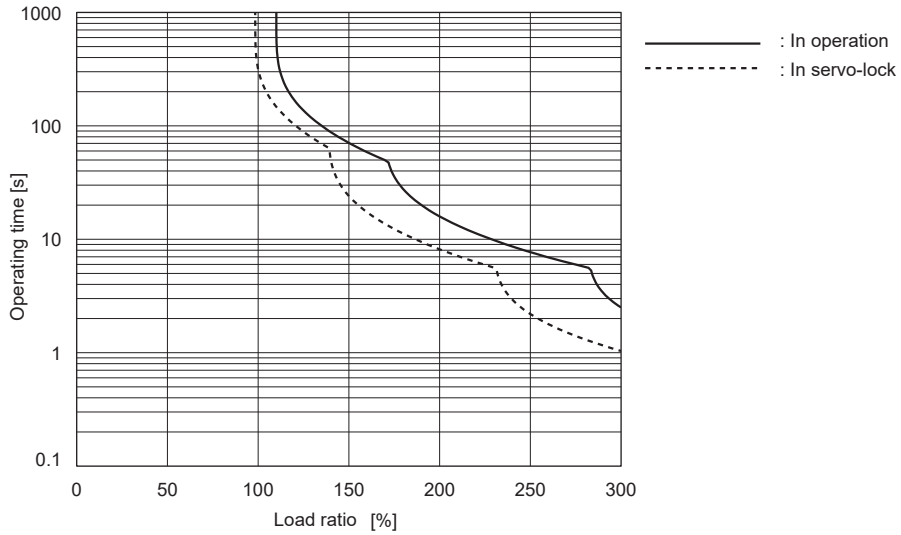

LM-K2 series

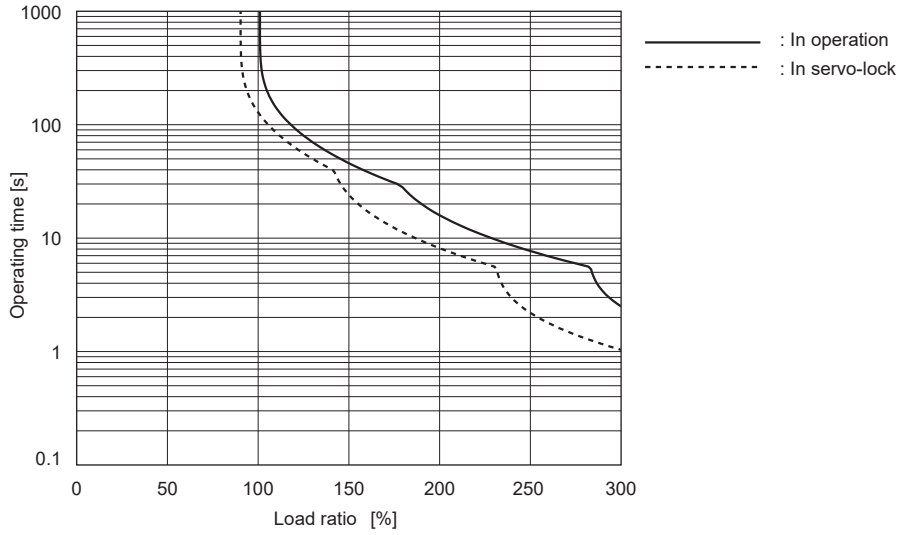

LM-U2 series

■LM-U2PBD-15M-1SS0

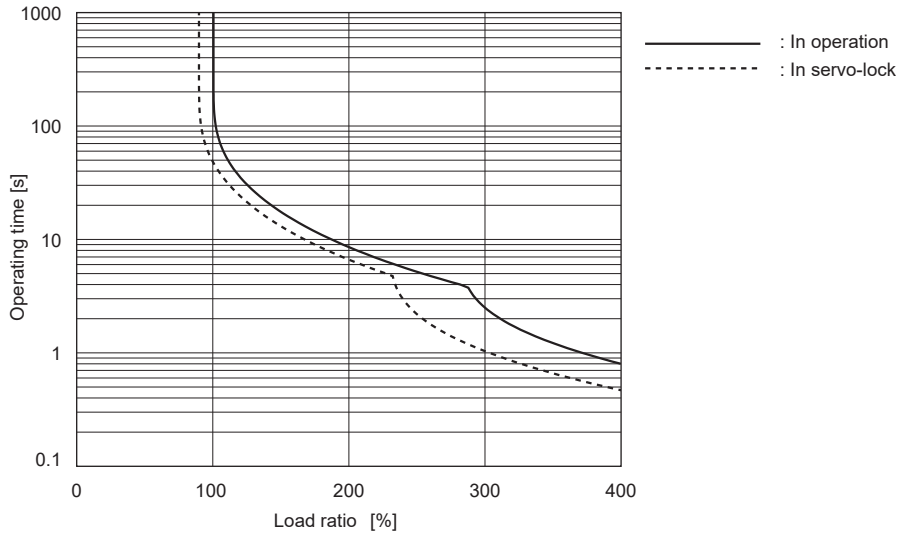

■Other than LM-U2PBD-15M-1SS0

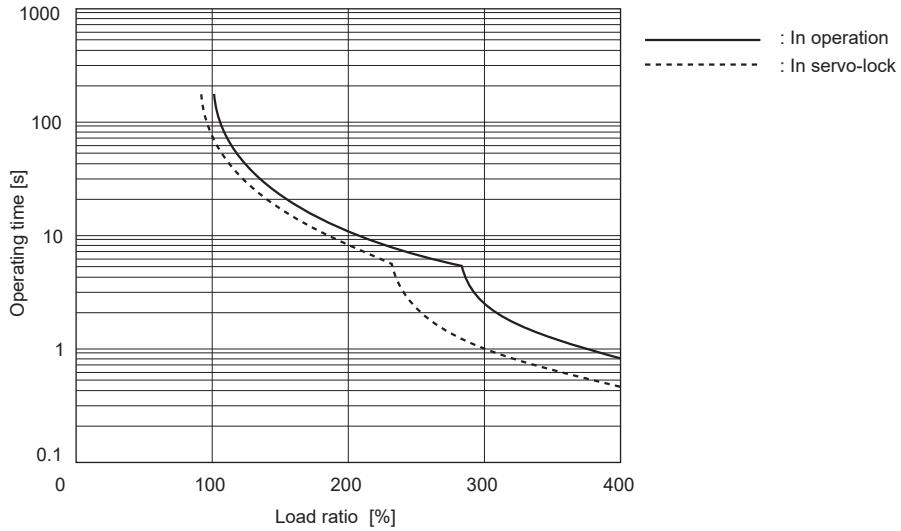

LM-F series (natural cooling)

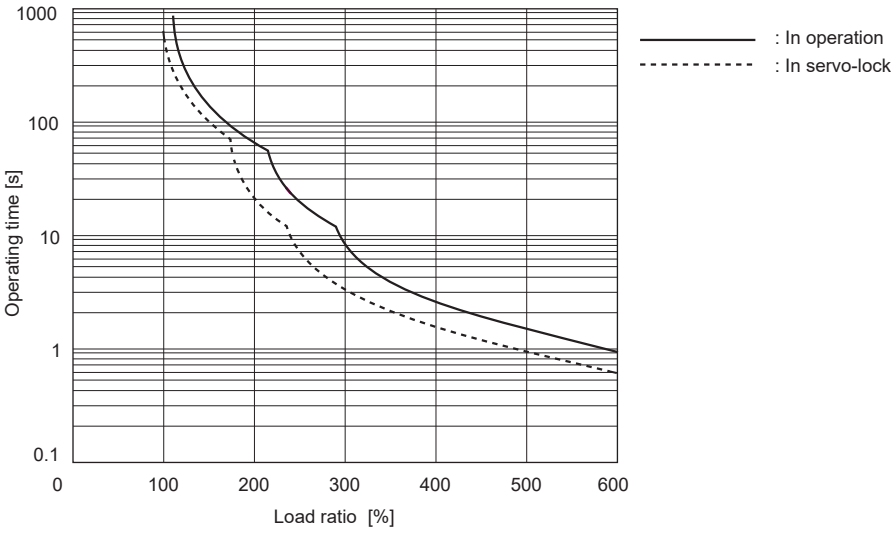

LM-F series (liquid cooling)

■LM-FP2B-06M-1SS0 (liquid-cooling)

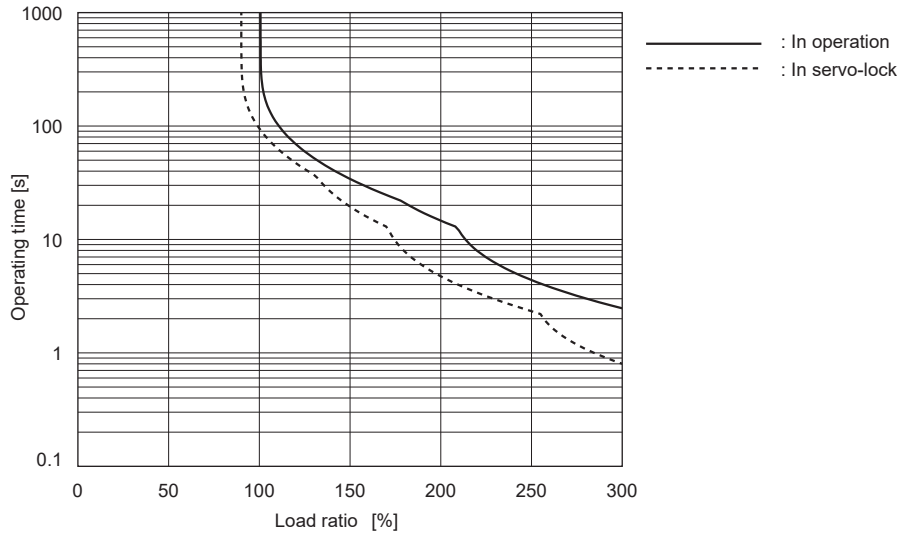

■Other than LM-FP2B-06M-1SS0 (liquid-cooling)

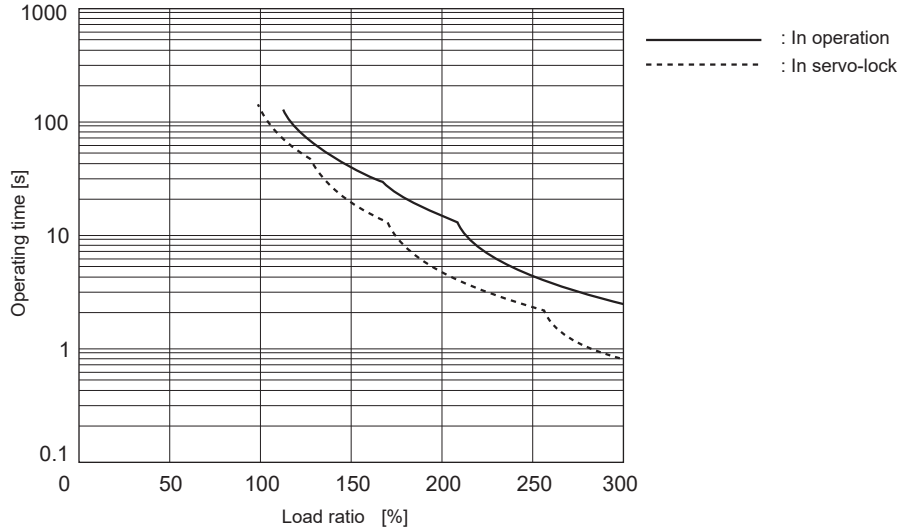

LM-AJ series

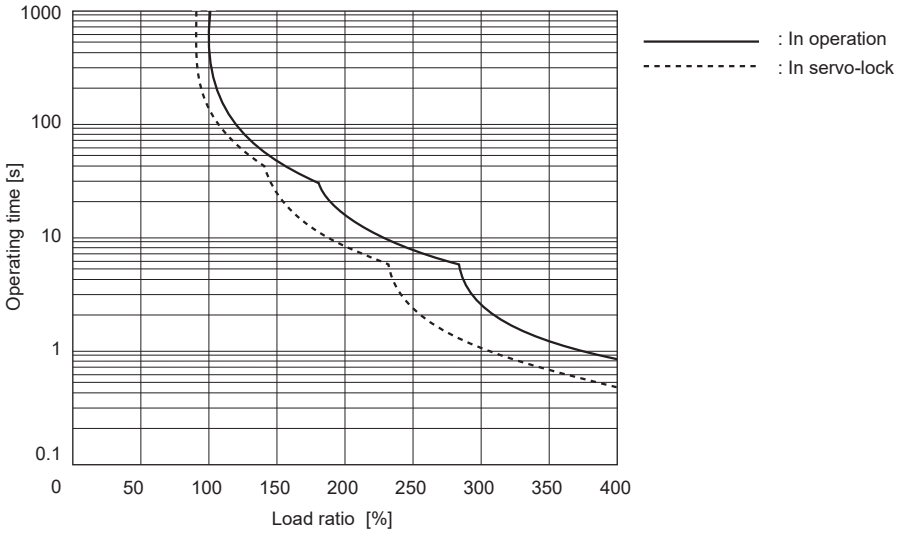
1000
100
10
1
0.1
Operating time [s]
0
50
100
150
200
250
300
350
400
Load ratio [%]
: In operation
: In servo-lock

LM-AU series

■Graph of overload protection characteristics

The following table lists the LM-AU series and corresponding graphs of overload protection characteristics. The overload protection characteristics depend on the linear servo motor.

LM-AU (primary side)	Graph of overload protection characteristics
LM-AUP3A-03V-JSS0 LM-AUP3B-06V-JSS0 LM-AUP3C-09V-JSS0 LM-AUP3D-11R-JSS0 LM-AUP4A-04R-JSS0 LM-AUP4B-09R-JSS0 LM-AUP4C-13P-JSS0 LM-AUP4D-18M-JSS0	☞ Page 545 Characteristic a
LM-AUP4F-26P-JSS0 LM-AUP4H-35M-JSS0	☞ Page 545 Characteristic b

■Characteristic a

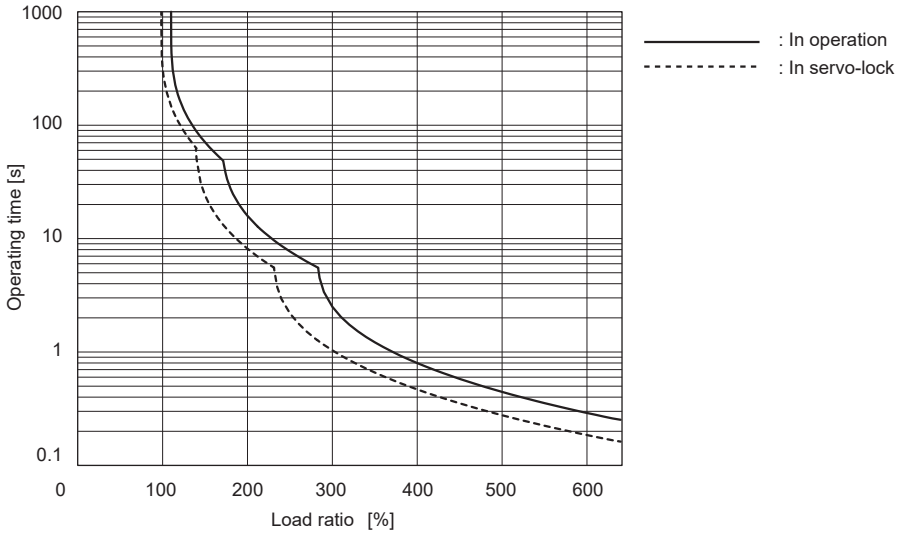

■Characteristic b

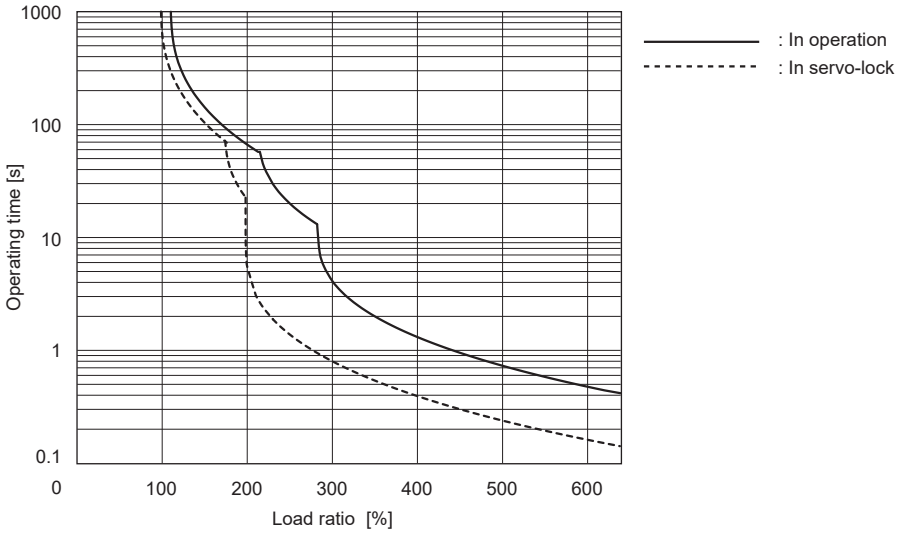

Power supply capacity and generated loss (1-axis servo amplifier)

Linear servo motor (primary side)	Servo amplifier	Power supply capacity [kVA]	Servo amplifier-generated heat [W]		Area required for heat dissipation [m^2]
			At rated output	At servo-off	
LM-H3P2A-07P-BSS0	MR-J5-40_	0.9	35	15	0.7
LM-H3P3A-12P-CSS0		0.9	35	15	0.7
LM-H3P3B-24P-CSS0	MR-J5-70_	1.3	50	15	1.0
LM-H3P3C-36P-CSS0		1.9	50	15	1.0
LM-H3P3D-48P-CSS0	MR-J5-200_	3.5	90	20	1.8
LM-H3P7A-24P-ASS0	MR-J5-70_	1.3	50	15	1.0
LM-H3P7B-48P-ASS0	MR-J5-200_	3.5	90	20	1.8
LM-H3P7C-72P-ASS0		3.8	90	20	1.8
LM-H3P7D-96P-ASS0	MR-J5-350_	5.5	130	20	2.6
LM-U2PAB-05M-0SS0	MR-J5-20_	0.5	25	15	0.5
LM-U2PAD-10M-0SS0	MR-J5-40_	0.9	35	15	0.7
LM-U2PAF-15M-0SS0		0.9	35	15	0.7
LM-U2PBB-07M-1SS0	MR-J5-20_	0.5	25	15	0.5
LM-U2PBD-15M-1SS0	MR-J5-60_	1.0	40	15	0.8
LM-U2PBF-22M-1SS0	MR-J5-70_	1.3	50	15	1.0
LM-U2P2B-40M-2SS0	MR-J5-200_	3.5	90	20	1.8
LM-U2P2C-60M-2SS0	MR-J5-350_	5.5	130	20	2.6
LM-U2P2D-80M-2SS0	MR-J5-500_	7.5	195	25	3.9
LM-FP2B-06M-1SS0	MR-J5-200_	3.5	90	20	1.8
LM-FP2D-12M-1SS0	MR-J5-500_	7.5	195	25	3.9
LM-FP2F-18M-1SS0	MR-J5-700_	10	300	25	6.0
LM-FP4B-12M-1SS0	MR-J5-500_	7.5	195	25	3.9
LM-FP4D-24M-1SS0	MR-J5-700_	10	300	25	6.0
LM-K2P1A-01M-2SS1	MR-J5-40_	0.9	35	15	0.7
LM-K2P1C-03M-2SS1	MR-J5-200_	3.5	90	20	1.8
LM-K2P2A-02M-1SS1	MR-J5-70_	1.3	50	15	1.0
LM-K2P2C-07M-1SS1	MR-J5-350_	5.5	130	20	2.6
LM-K2P2E-12M-1SS1	MR-J5-500_	7.5	195	25	3.9
LM-K2P3C-14M-1SS1	MR-J5-350_	5.5	130	20	2.6
LM-K2P3E-24M-1SS1	MR-J5-500_	7.5	195	25	3.9
LM-AJP1B-07K-JSS0	MR-J5-40_	0.9	35	15	0.7
LM-AJP1D-14K-JSS0	MR-J5-70_	1.3	50	15	1.0
LM-AJP2B-12S-JSS0	MR-J5-40_	0.9	35	15	0.7
LM-AJP2D-23T-JSS0	MR-J5-70_	1.3	50	15	1.0
LM-AJP3B-17N-JSS0	MR-J5-40_	0.9	35	15	0.7
LM-AJP3D-35R-JSS0	MR-J5-70_	1.3	50	15	1.0
LM-AJP4B-22M-JSS0	MR-J5-40_	0.9	35	15	0.7
LM-AJP4D-45N-JSS0	MR-J5-70_	1.3	50	15	1.0
LM-AUP3A-03V-JSS0	MR-J5-40_	0.9	35	15	0.7
LM-AUP3B-06V-JSS0		0.9	35	15	0.7
LM-AUP3C-09V-JSS0		0.9	35	15	0.7
LM-AUP3D-11R-JSS0		1.2	35	15	0.7
LM-AUP4A-04R-JSS0	MR-J5-70_	1.3	50	15	1.0
LM-AUP4B-09R-JSS0		1.3	50	15	1.0
LM-AUP4C-13P-JSS0		1.3	50	15	1.0
LM-AUP4D-18M-JSS0		1.3	50	15	1.0
LM-AUP4F-26P-JSS0	MR-J5-200_	3.5	90	20	1.8
LM-AUP4H-35M-JSS0		3.5	90	20	1.8

Power supply capacity and generated loss (multi-axis servo amplifier)

The following tables indicate the losses generated by servo amplifiers under rated load. For thermal design of an enclosed type cabinet, use the values in the tables in consideration for the worst operating conditions including environments and operation patterns. The actual amount of generated heat depends on the frequency of operation and will be between the "At rated output" and "At servo-off" values. When the linear servo motor is run at less than the rated speed, the power supply capacity will be smaller than the calculated value, but the servo amplifier's generated heat will not change.

Calculation method of power supply capacity

Calculate the power supply capacity for one servo amplifier from the following tables.

■Power supply capacity for one servo amplifier at rated output

Servo amplifier	Power supply capacity [kVA] *1
MR-J5W2-22_	Total power supply capacity of all linear servo motors to be connected (A)
MR-J5W2-44_	
MR-J5W2-77_	
MR-J5W2-1010_	
MR-J5W3-222_	
MR-J5W3-444_	

*1 The power supply capacity will vary according to the power impedance. This value is applicable when the power factor improving reactor is not used.

■Servo amplifier power supply capacity for one linear servo motor

Linear servo motor	Power supply capacity [kVA] (A)
LM-H3P2A-07P-BSS0	0.9
LM-H3P3A-12P-CSS0	0.9
LM-H3P3B-24P-CSS0	1.3
LM-H3P3C-36P-CSS0	1.9
LM-H3P7A-24P-ASS0	1.3
LM-U2PAB-05M-0SS0	0.5
LM-U2PAD-10M-0SS0	0.9
LM-U2PAF-15M-0SS0	0.9
LM-U2PBB-07M-1SS0	0.5
LM-U2PBD-15M-1SS0	1.0
LM-U2PBF-22M-1SS0	1.3
LM-K2P1A-01M-2SS1	0.9
LM-K2P2A-02M-1SS1	1.3
LM-AJP1B-07K-JSS0	0.9
LM-AJP1D-14K-JSS0	1.3
LM-AJP2B-12S-JSS0	0.9
LM-AJP2D-23T-JSS0	1.3
LM-AJP3B-17N-JSS0	0.9
LM-AJP3D-35R-JSS0	1.3
LM-AJP4B-22M-JSS0	0.9
LM-AJP4D-45N-JSS0	1.3
LM-AUP3A-03V-JSS0	0.9
LM-AUP3B-06V-JSS0	0.9
LM-AUP3C-09V-JSS0	0.9
LM-AUP3D-11R-JSS0	1.2
LM-AUP4A-04R-JSS0	1.3
LM-AUP4B-09R-JSS0	1.3
LM-AUP4C-13P-JSS0	1.3

Linear servo motor	Power supply capacity [kVA] (A)
LM-AUP4D-18M-JSS0	1.3
LM-AUP4F-26P-JSS0	3.5
LM-AUP4H-35M-JSS0	3.5

Calculation method of the amount of heat generated by the servo amplifier

Calculate the amount of heat generated by one servo amplifier from the following tables.

■Amount of heat generated by one servo amplifier at rated output

Servo amplifier	Servo amplifier-generated heat [W] *1	
	At servo-off (C)	At rated output
MR-J5W2-22_	20	Sum of the total amount of heat generated by the servo amplifier for all linear servo motors to be connected (B) and the amount of heat generated by the servo amplifier at servo-off (C)
MR-J5W2-44_	20	
MR-J5W2-77_	20	
MR-J5W2-1010_	20	
MR-J5W3-222_	25	
MR-J5W3-444_	25	

*1 The values stated for heat generated by the servo amplifier do not take into account the heat generated during regeneration. To calculate heat generated by the regenerative option, refer to the following.
☞ Page 269 Regenerative option

■Amount of heat generated by one servo amplifier for one linear servo motor

Linear servo motor	Servo amplifier-generated heat [W] (B)
LM-H3P2A-07P-BSS0	35
LM-H3P3A-12P-CSS0	35
LM-H3P3B-24P-CSS0	50
LM-H3P3C-36P-CSS0	75
LM-H3P7A-24P-ASS0	50
LM-U2PAB-05M-0SS0	25
LM-U2PAD-10M-0SS0	35
LM-U2PAF-15M-0SS0	35
LM-U2PBB-07M-1SS0	25
LM-U2PBD-15M-1SS0	40
LM-U2PBF-22M-1SS0	50
LM-K2P1A-01M-2SS1	35
LM-K2P2A-02M-1SS1	50
LM-AJP1B-07K-JSS0	35
LM-AJP1D-14K-JSS0	50
LM-AJP2B-12S-JSS0	35
LM-AJP2D-23T-JSS0	50
LM-AJP3B-17N-JSS0	35
LM-AJP3D-35R-JSS0	50
LM-AJP4B-22M-JSS0	35
LM-AJP4D-45N-JSS0	50
LM-AUP3A-03V-JSS0	35
LM-AUP3B-06V-JSS0	35
LM-AUP3C-09V-JSS0	35
LM-AUP3D-11R-JSS0	35
LM-AUP4A-04R-JSS0	50
LM-AUP4B-09R-JSS0	50
LM-AUP4C-13P-JSS0	50
LM-AUP4D-18M-JSS0	50
LM-AUP4F-26P-JSS0	90
LM-AUP4H-35M-JSS0	90

Dynamic brake characteristics

The approximate coasting distance from when the dynamic brake is activated until when the linear servo motor stops can be calculated with the equation below.

$Lmax = V_0 \cdot (0.03 + M \cdot (A + B \cdot V_0^2))$

Lmax: Coasting distance of the machine [m]

V_0: Speed when the brake is activated [m/s]

M: Full mass of the moving part [kg]

A: Coefficient (Refer to the following table.)

B: Coefficient (Refer to the following table.)

Linear servo motor (primary side)	Coefficient A	Coefficient B
LM-H3P2A-07P-BSS0	7.15×10^{-3}	2.94×10^{-3}
LM-H3P3A-12P-CSS0	2.81×10^{-3}	1.47×10^{-3}
LM-H3P3B-24P-CSS0	7.69×10^{-3}	2.27×10^{-4}
LM-H3P3C-36P-CSS0	7.22×10^{-3}	1.13×10^{-4}
LM-H3P3D-48P-CSS0	1.02×10^{-3}	2.54×10^{-4}
LM-H3P7A-24P-ASS0	7.69×10^{-3}	2.14×10^{-4}
LM-H3P7B-48P-ASS0	9.14×10^{-4}	2.59×10^{-4}
LM-H3P7C-72P-ASS0	7.19×10^{-4}	1.47×10^{-4}
LM-H3P7D-96P-ASS0	6.18×10^{-4}	9.59×10^{-5}
LM-U2PAB-05M-0SS0	5.72×10^{-2}	1.72×10^{-4}
LM-U2PAD-10M-0SS0	2.82×10^{-2}	8.60×10^{-5}
LM-U2PAF-15M-0SS0	1.87×10^{-2}	5.93×10^{-5}
LM-U2PBB-07M-1SS0	3.13×10^{-2}	1.04×10^{-4}
LM-U2PBD-15M-1SS0	1.56×10^{-2}	5.18×10^{-5}
LM-U2PBF-22M-1SS0	4.58×10^{-2}	1.33×10^{-5}
LM-U2P2B-40M-2SS0	1.47×10^{-3}	1.27×10^{-5}
LM-U2P2C-60M-2SS0	1.07×10^{-3}	7.66×10^{-6}
LM-U2P2D-80M-2SS0	9.14×10^{-4}	5.38×10^{-6}
LM-FP2B-06M-1SS0	8.96×10^{-4}	1.19×10^{-3}
LM-FP2D-12M-1SS0	5.55×10^{-4}	4.81×10^{-4}
LM-FP2F-18M-1SS0	4.41×10^{-4}	2.69×10^{-4}
LM-FP4B-12M-1SS0	5.02×10^{-4}	4.36×10^{-4}
LM-FP4D-24M-1SS0	3.55×10^{-4}	1.54×10^{-4}
LM-FP4F-36M-1SS0	1.79×10^{-4}	1.36×10^{-4}
LM-FP4H-48M-1SS0	1.15×10^{-4}	1.19×10^{-4}
LM-FP5H-60M-1SS0	1.95×10^{-4}	4.00×10^{-5}
LM-K2P1A-01M-2SS1	5.36×10^{-3}	6.56×10^{-3}
LM-K2P1C-03M-2SS1	1.17×10^{-3}	3.75×10^{-4}
LM-K2P2A-02M-1SS1	2.49×10^{-2}	1.02×10^{-3}
LM-K2P2C-07M-1SS1	6.85×10^{-4}	2.80×10^{-4}
LM-K2P2E-12M-1SS1	5.53×10^{-4}	1.14×10^{-4}
LM-K2P3C-14M-1SS1	2.92×10^{-4}	1.16×10^{-4}
LM-K2P3E-24M-1SS1	2.53×10^{-4}	5.52×10^{-5}
LM-AJP1B-07K-JSS0	6.85×10^{-3}	3.70×10^{-3}
LM-AJP1D-14K-JSS0	4.08×10^{-2}	3.42×10^{-4}
LM-AJP2B-12S-JSS0	3.42×10^{-3}	2.06×10^{-3}
LM-AJP2D-23T-JSS0	1.35×10^{-2}	2.48×10^{-4}
LM-AJP3B-17N-JSS0	2.24×10^{-3}	1.47×10^{-3}
LM-AJP3D-35R-JSS0	6.61×10^{-3}	2.23×10^{-4}
LM-AJP4B-22M-JSS0	1.65×10^{-3}	1.12×10^{-3}
LM-AJP4D-45N-JSS0	4.03×10^{-3}	1.94×10^{-4}
LM-AUP3A-03V-JSS0	2.80×10^{-2}	4.60×10^{-5}

Linear servo motor (primary side)	Coefficient A	Coefficient B
LM-AUP3B-06V-JSS0	1.36×10^{-2}	2.30×10^{-5}
LM-AUP3C-09V-JSS0	9.10×10^{-3}	1.49×10^{-5}
LM-AUP3D-11R-JSS0	6.70×10^{-3}	1.13×10^{-5}
LM-AUP4A-04R-JSS0	5.89×10^{-2}	7.86×10^{-6}
LM-AUP4B-09R-JSS0	1.76×10^{-2}	5.77×10^{-6}
LM-AUP4C-13P-JSS0	9.01×10^{-2}	4.62×10^{-6}
LM-AUP4D-18M-JSS0	5.76×10^{-3}	3.77×10^{-6}
LM-AUP4F-26P-JSS0	7.13×10^{-4}	1.10×10^{-6}
LM-AUP4H-35M-JSS0	5.15×10^{-4}	8.86×10^{-7}

Permissible load to motor mass ratio when the dynamic brake is used

Linear servo motor (primary side)	Permissible load to motor mass ratio [Multiplier]
LM-H3 series	40
LM-U2 series	100
LM-F series	
LM-K2 series	50
LM-AJP1B-07K-JSS0	15
LM-AJP1D-14K-JSS0	30
LM-AJP2B-12S-JSS0	25
LM-AJP2D-23T-JSS0	30
LM-AJP3B-17N-JSS0	35
LM-AJP3D-35R-JSS0	35
LM-AJP4B-22M-JSS0	35
LM-AJP4D-45N-JSS0	35
LM-AUP3A-03V-JSS0	35
LM-AUP3B-06V-JSS0	35
LM-AUP3C-09V-JSS0	25
LM-AUP3D-11R-JSS0	20
LM-AUP4A-04R-JSS0	35
LM-AUP4B-09R-JSS0	35
LM-AUP4C-13P-JSS0	35
LM-AUP4D-18M-JSS0	35
LM-AUP4F-26P-JSS0	35
LM-AUP4H-35M-JSS0	35

11.7 Absolute position detection system

When the linear servo motor is used with the absolute position detection system, an absolute position linear encoder is required.

Operating conditions of absolute position detection system

- Use an absolute position type linear encoder.
- Perform magnetic pole detection in the incremental system, and disable magnetic pole detection after detection.
- Enable the absolute position detection system with [Pr. PA03 Absolute position detection system].

Alarm detection

[AL. 025 Absolute position erased], [AL. 092 Battery cable disconnection warning], [AL. 09F Battery warning], and [AL. 0E3 Absolute position counter warning] are not detected.

Backup

The linear encoder backs up the absolute position data. Therefore, the encoder battery need not be installed to the servo amplifier.

12 USING A DIRECT DRIVE MOTOR

12.1 Functions and configuration

Outline

The following shows the differences between the direct drive motor and the rotary servo motor.

Category	Item	Differences		Remark
		Direct drive motor	Rotary servo motor	
Servo motor magnetic pole alignment	Magnetic pole detection	Required	Not required (adjusted before shipping)	Automatically executed at the first servo-on after the power is turned on. In the absolute position detection system, the magnetic pole detection can be disabled with [Pr. PL01]. ☞ Page 560 Magnetic pole detection method setting
Absolute position detection system	Absolute position encoder battery	Required	Differs depending on the servo motor.	—
	Absolute position storage unit (MR-BTAS01)	Required	Not required	

Configuration including peripheral equipment

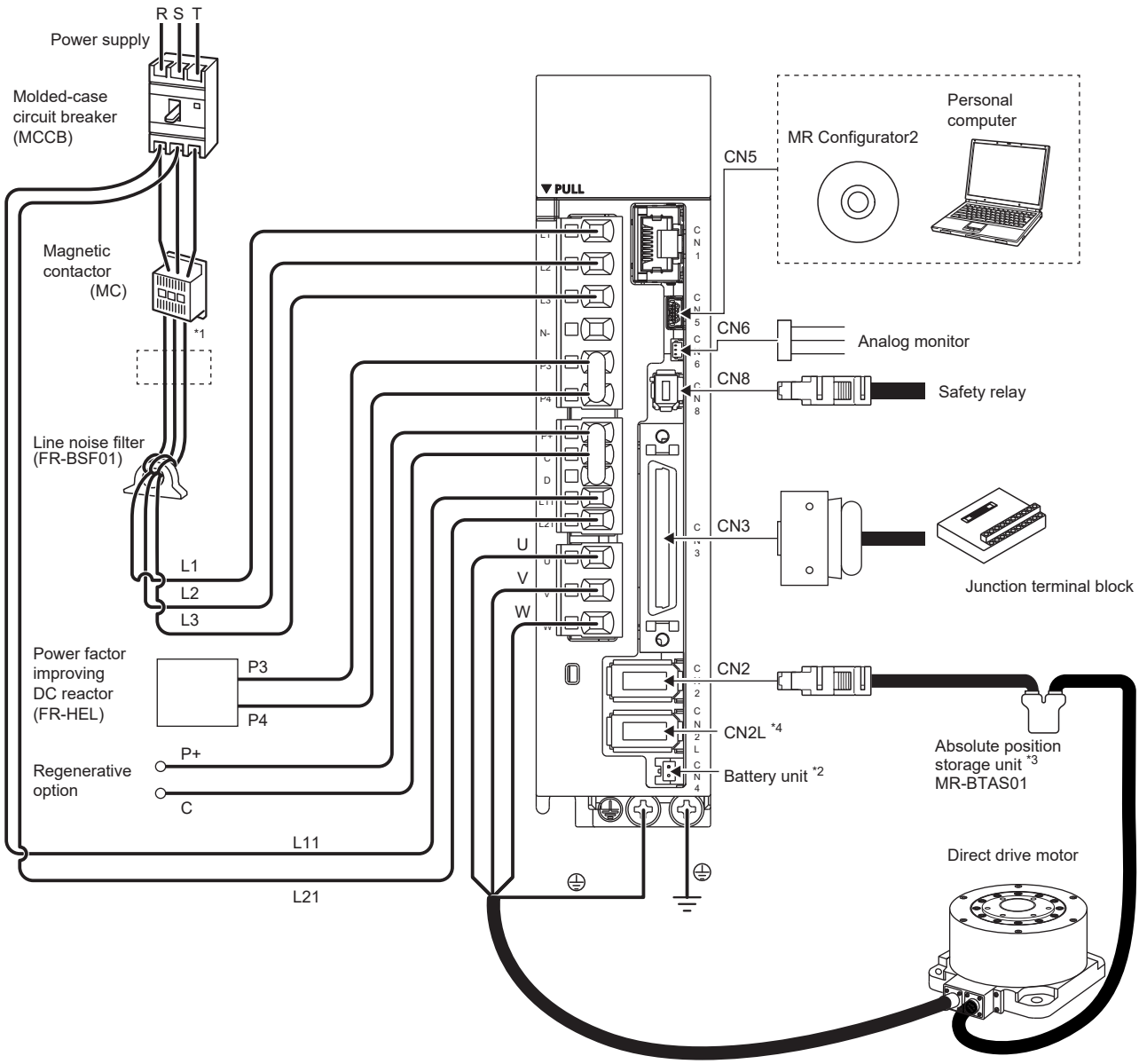

*1 The power factor improving AC reactor can also be used. In this case, the power factor improving DC reactor cannot be used.

*2 The battery unit is used for the absolute position detection system.
☞ Page 412 ABSOLUTE POSITION DETECTION SYSTEM

*3 The absolute position storage unit is used for the absolute position detection system.

*4 This is for the MR-J5-_A-RJ_ servo amplifier. The CN2L connector is not used for the direct drive servo system.

12.2 Startup [G] [B]

When using the MR-J5_-_B_, the terms below have the following meanings.

- LSP (Forward rotation stroke end) → FLS (Upper stroke limit)
- LSN (Reverse rotation stroke end) → RLS (Lower stroke limit)

When using a direct drive motor, set [Pr. PA01.1 Operation mode selection] to "6" (Direct drive motor control mode).

After power-on, the Z-phase mark of the direct drive motor manufactured by Mitsubishi Electric must pass the connector area once. In a system which prevents the direct drive motor from making a full rotation or more, install the direct drive motor in a position where the Z-phase mark can pass over the connector area.

Startup procedure

Start up the direct drive servo system with the following procedure.

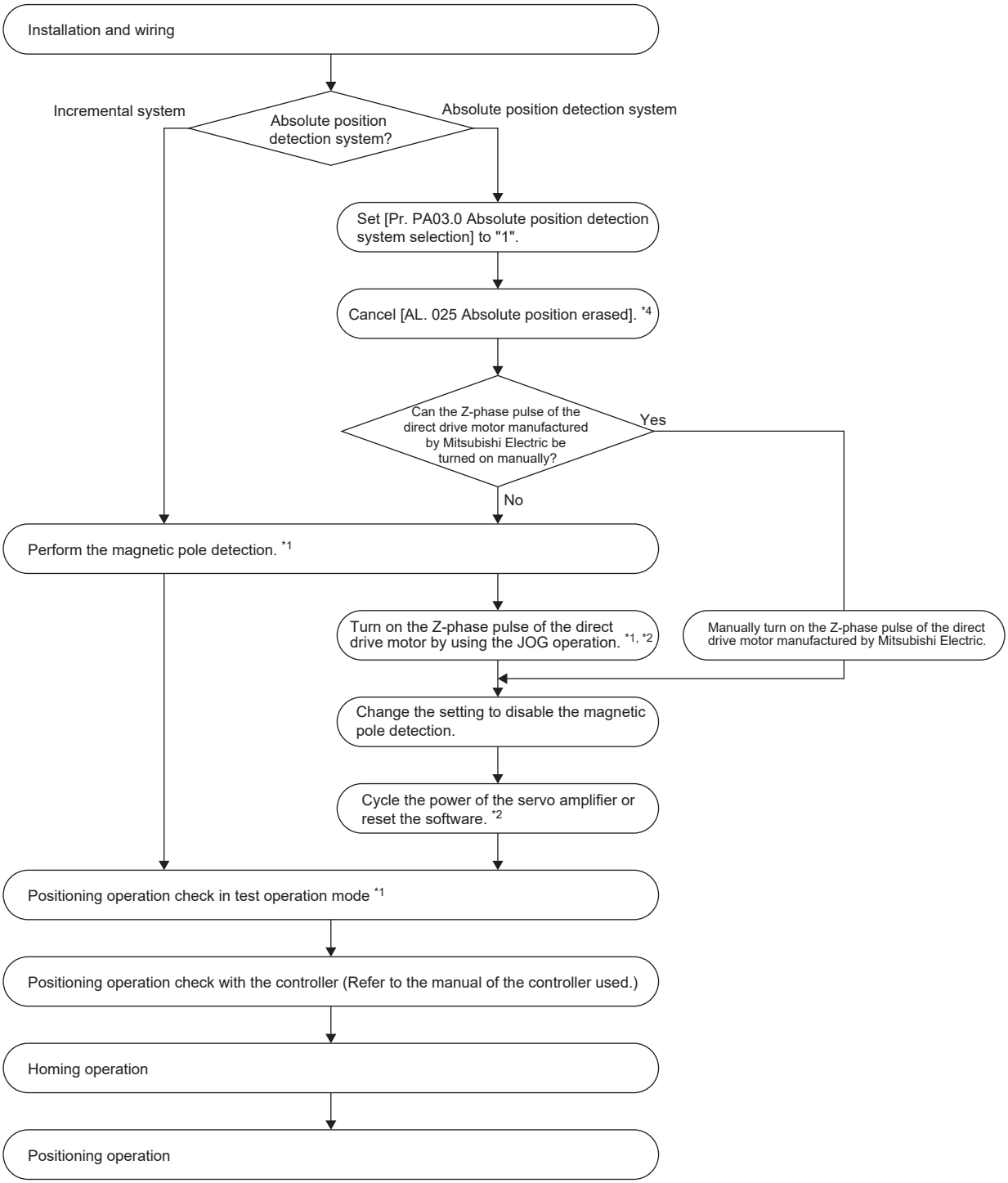

*1 Use MR Configurator2.

*2 In the absolute position detection system, turn on the Z-phase pulse of the direct drive motor while the servo amplifier power is on, and then cycle the power of the servo amplifier. Cycling the power confirms the absolute position. Without this operation, the absolute position will not be restored properly, and a warning will occur at the controller.

*3 If the Z-phase pulse of the direct drive motor can be turned on manually, the Z-phase pulse does not have to be turned on by the magnetic pole detection or the JOG operation.
For this operation, connect the direct drive motor encoder and the servo amplifier, and turn on only the control circuit power supply of the servo amplifier (L11/L21) (turn off the main circuit power supply L1/L2/L3). Ensure the safety at this time.

*4 After the servo amplifier is connected to the direct drive motor with an encoder cable, [AL. 025 Absolute position erased] occurs at the initial power-on. Cancel the alarm by turning off/on the power.

Magnetic pole detection

Precautions

- The magnetic pole detection is not required for the configured absolute position detection system where the Z-phase pulse of the direct drive motor manufactured by Mitsubishi Electric can be turned on manually. For this operation, connect the direct drive motor encoder and the servo amplifier, and turn on the control circuit power supply of the servo amplifier. Ensure the safety at this time.
- For the magnetic pole detection of vertical axis with direct drive motors, refer to "Equipment configuration" in the following manual.

📖Direct Drive Motor User's Manual

Outline of magnetic pole detection

Before the positioning operation of the direct drive motor, perform the magnetic pole detection.

When starting up the equipment, use the test operation mode (positioning operation) of MR Configurator2.

The magnetic pole detection includes the position detection method and minute position detection method. Each method has advantages and disadvantages. Refer to the following for the characteristics of each method.

☞ Page 499 Outline of magnetic pole detection

Select a magnetic pole detection method suitable for the usage.

In the initial value, the position detection method is selected.

Precautions on magnetic pole detection

- For the magnetic pole detection, the direct drive motor automatically starts to move simultaneously with turning-on of the servo-on command.
- If the magnetic pole detection is not executed properly, the direct drive motor may operate unexpectedly.
- Establish the machine configuration to use LSP (Forward rotation stroke end) and LSN (Reverse rotation stroke end). The machine may be damaged due to a collision without LSP and LSN.
- Assign LSP and LSN, and perform the magnetic pole detection also in the torque mode.
- At the magnetic pole detection, whether the direct drive motor moves in the positive or negative direction is unpredictable.
- Depending on the setting value of [Pr. PL09 Magnetic pole detection voltage level], an overload, overcurrent, magnetic pole detection alarm, or others may occur.
- When performing the positioning operation from a controller, use the sequence which confirms the normal completion of the magnetic pole detection and the servo-on status, then outputs the positioning command. If the controller outputs the positioning command before RD (Ready) turns on, the command may not be accepted or an alarm may occur.
- For the machine whose friction becomes 30 % or more of the continuous thrust, the direct drive motor may not operate properly after the magnetic pole detection.
- For the horizontal shaft of the machine whose unbalanced thrust becomes 20 % or more of the continuous thrust, the direct drive motor may not operate properly after the magnetic pole detection.
- The magnetic pole detection may fail if performed simultaneously with multiple axes connected to each other (e.g. a tandem configuration). Perform the magnetic pole detection for each axis. At this time, set the axes for which the magnetic pole detection is not performed to servo-off.
- During the magnetic pole detection, the value of [Pr. PE47 Unbalanced torque offset] is regarded as "0".

Magnetic pole detection procedure

Point

When using a controller manufactured by Mitsubishi Electric, the servo parameter setting values are overwritten from the controller. Once magnetic pole detection is complete, note down the changed servo parameter setting values, and set the same values in the controller.

■Magnetic pole detection by position detection method

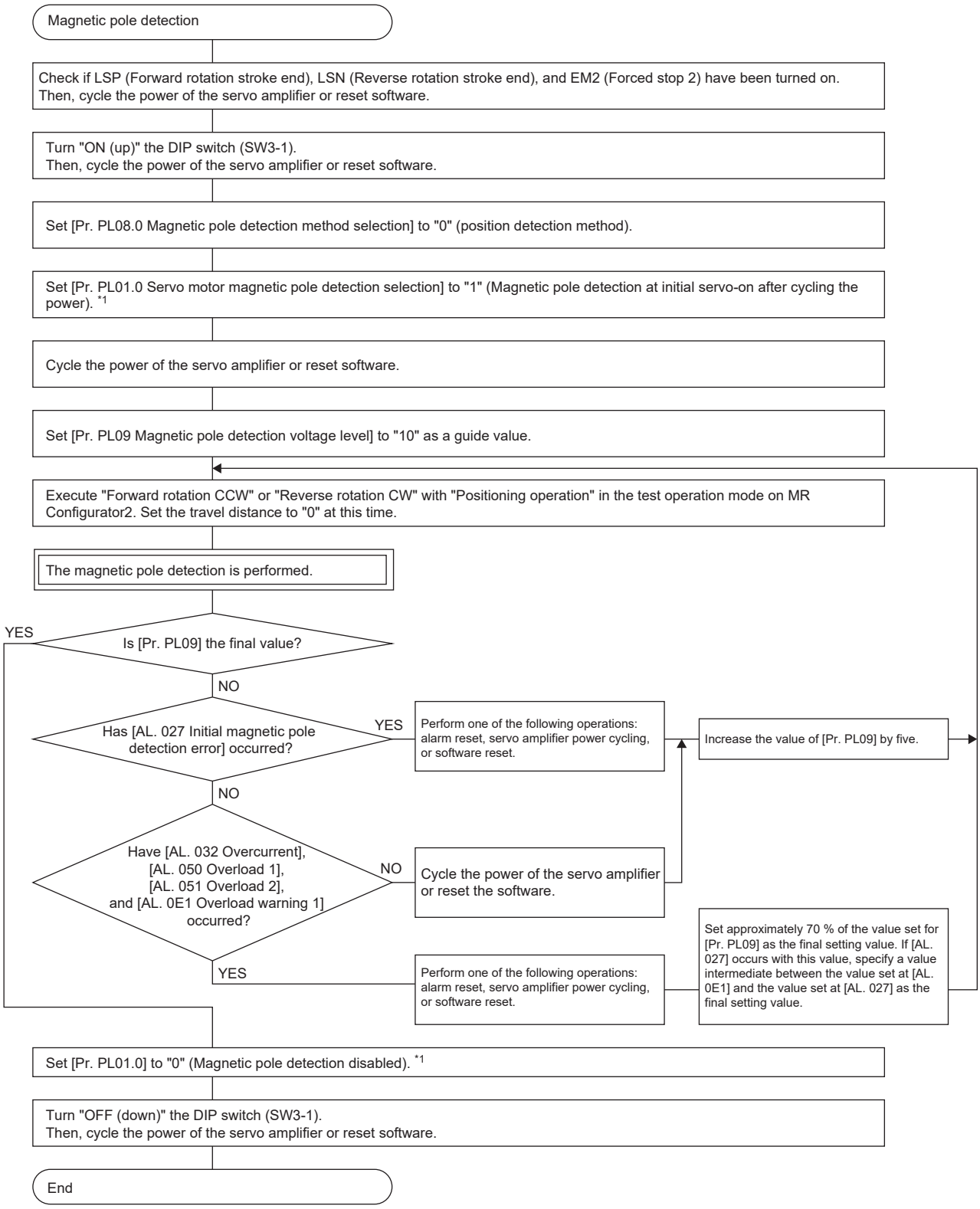

*1 For the incremental system, the setting of [Pr. PL01] is not required.

■Magnetic pole detection by minute position detection method

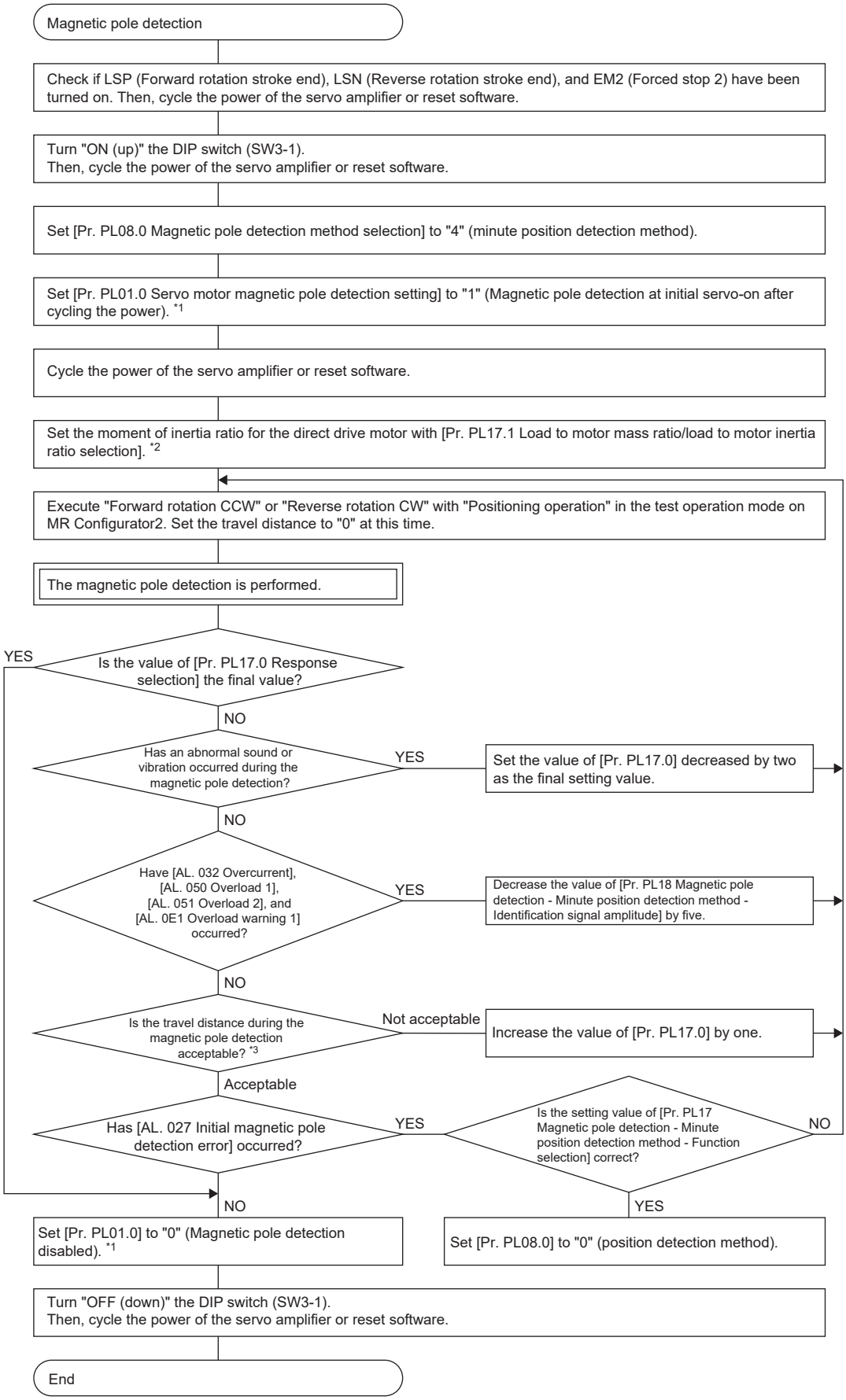

*1 For the incremental system, the setting of [Pr. PL01] is not required.
*2 If the load to mass of the direct drive motor inertia ratio is unknown, perform the magnetic pole detection by the position detection method, and then perform the auto tuning to set an estimated value.
*3 For the magnetic pole detection by the minute position detection method, the maximum travel distance at the magnetic pole detection must be 0.5 mm or less. To shorten the travel distance, increase the value of [Pr. PL17.0].

Stroke limit disabled setting at magnetic pole detection

When performing a magnetic pole detection without LSP (Forward rotation stroke end) and LSN (Reverse rotation stroke end), set [Pr. PL08.2 Magnetic pole detection - Stroke limit enabled/disabled selection].

Servo parameter	Description
PL08.2	Magnetic pole detection - Stroke limit enabled/disabled selection 0: Enabled 1: Disabled Initial value: 0 (enabled)

Preparation for magnetic pole detection

For the magnetic pole detection, use the test operation mode (positioning operation) of MR Configurator2. Turn off the servo amplifier power, and turn on the DIP switch (SW3-1). Turning on the power enables the test operation mode.

Magnetic pole detection method setting

Set the magnetic pole detection method by using [Pr. PL08.0 Magnetic pole detection method selection].
In the following cases, set the magnetic pole detection method to the minute position detection method.

- When a shortened travel distance at the magnetic pole detection is required
- When the magnetic pole detection by the position detection method is not completed properly

Servo parameter	Description
PL08.0	Magnetic pole detection method selection 0: Position detection method 4: Minute position detection method Initial value: 0 (position detection method)

For an absolute position detection system, set [Pr. PL01.0 Servo motor magnetic pole detection selection] to "1" (Magnetic pole detection at initial servo-on after cycling the power). After the completion of the magnetic pole detection, change [Pr. PL01.0] to "0" (magnetic pole detection disabled).

Servo parameter	Description
PL01.0	Servo motor magnetic pole detection selection 0: Magnetic pole detection disabled 1: Magnetic pole detection at initial servo-on after cycling the power 5: Magnetic pole detection at every servo-on Initial value: 1 (magnetic pole detection at initial servo-on after cycling the power)

Setting of magnetic pole detection voltage level by position detection method

For magnetic pole detection using the position detection method, set the voltage level with [Pr. PL09 Magnetic pole detection voltage level]. For the magnetic pole detection by the minute position detection method, the voltage level setting is not required.

■Guideline of servo parameter setting

Set the parameters by referring to the following table.

Servo status	Small ← Medium → Large (10 or less (initial value) 50 or more)	
Torque required for operation	Small	Large
Overload, overcurrent alarm	Hardly occurs	Easily occurs
Magnetic pole detection alarm	Easily occurs	Hardly occurs
Magnetic pole detection accuracy	Low	High

■Setting procedure

1. Detect the magnetic poles, then increase the setting value of [Pr. PL09 Magnetic pole detection voltage level] until [AL. 050 Overload 1], [AL. 051 Overload 2], [AL. 033 Overvoltage], [AL. 0E1 Overload warning 1], and [AL. 0EC Overload warning 2] occur. Increase the setting value by five as a guide value. When these alarms and warnings occur during the magnetic pole detection with MR Configurator2, the test operation of MR Configurator2 automatically completes and the servo-off state is established.
2. Set the value to approximately 70 % of the value which triggers [AL. 050], [AL. 051], [AL. 033], [AL. 0E1], and [AL. 0EC]. If [AL. 027 Initial magnetic pole detection error] occurs with this value, specify a value intermediate between the value set at occurrence of [AL. 050], [AL. 051], [AL. 033], [AL. 0E1], and [AL. 0EC] and the value set at the magnetic pole detection alarm occurrence as the final setting value.
3. Perform the magnetic pole detection again with the final setting value, and make sure that the accuracy of the magnetic pole detection is as required.

■Setting example

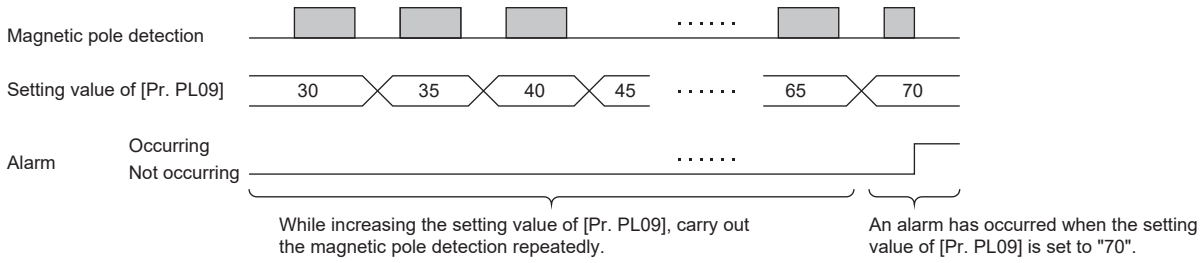

In this example, set the final setting value of [Pr. PL09 Magnetic pole detection voltage level] to 49 (setting value at the alarm occurrence = 70 × 0.7).

Setting of response performance and load to motor inertia ratio by minute position detection method

When using the minute position detection method, set the response performance with [Pr. PL17.0 Response selection] and set the load to motor inertia ratio with [Pr. PL17.1 Load to motor mass ratio/load to motor inertia ratio selection]. If the load to mass of the direct drive motor inertia ratio is unknown, perform the magnetic pole detection by the position detection method, and then perform the auto tuning to set an estimated value.

• [PL17.0 Response selection]

Setting value	Responsiveness
0	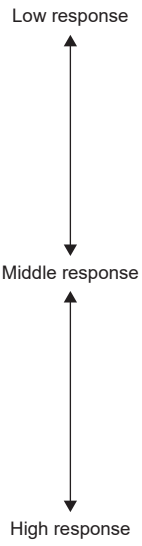
1	
2	
3	
4	
5	
6	
7	
8	
9	
A	
B	
C	
D	
E	
F	

Initial value: 0

• [Pr. PL17.1 Load to motor mass ratio/load to motor inertia ratio selection]

Setting value	Load to motor mass ratio/load to motor inertia ratio
0	10 times or less
1	10 multiplier
2	20 multiplier
3	30 multiplier
4	40 multiplier
5	50 multiplier
6	60 multiplier
7	70 multiplier
8	80 multiplier
9	90 multiplier
A	100 multiplier
B	110 multiplier
C	120 multiplier
D	130 multiplier
E	140 multiplier
F	150 times or more

Initial value: 0

Setting of identification signal amplitude by minute position detection method

If [AL. 032 Overcurrent], [AL. 050 Overload 1], [AL. 051 Overload 2], or [AL. 0E1 Overload warning 1] occurs at the magnetic pole detection by the minute position detection method, set a smaller value for [Pr. PL18 Magnetic pole detection - Minute position detection method - Identification signal amplitude]. Basically, [Pr. PL18] does not need to be changed from the initial value.

Operation at magnetic pole detection

Precautions

- After the magnetic pole detection, check the positioning accuracy with the test operation (positioning operation function) of MR Configurator2.
- The magnetic pole detection improves in accuracy when performed with no load.

■For incremental system

For the incremental system, the magnetic pole detection is required every time the power is turned on or the software is reset. By turning on the servo-on command from the controller after the power-on, the magnetic pole detection is automatically carried out. Therefore, there is no need to set [Pr. PL01.0 Servo motor magnetic pole detection selection] for executing magnetic pole detection.

- Timing chart

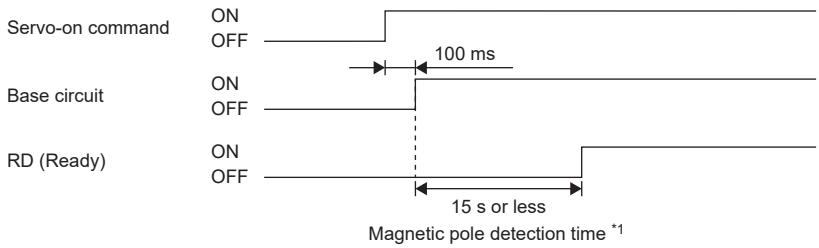

*1 The magnetic pole detection time indicates the operation time when LSP (Forward rotation stroke end) and LSN (Reverse rotation stroke end) are on.

- Direct drive motor movement (when LSP and LSN are on)

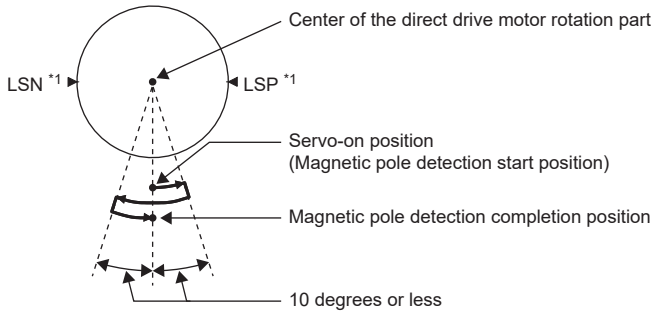

*1 When LSP (Forward rotation stroke end) or LSN (Reverse rotation stroke end) is turned off during the magnetic pole detection, the magnetic pole detection is carried on to the opposite direction. When both LSP and LSN are off, [AL. 027 Initial magnetic pole detection error] occurs.

• Direct drive motor movement (when LSP or LSN is off)

When LSP or LSN is off at servo-on, the magnetic pole detection is performed as follows.

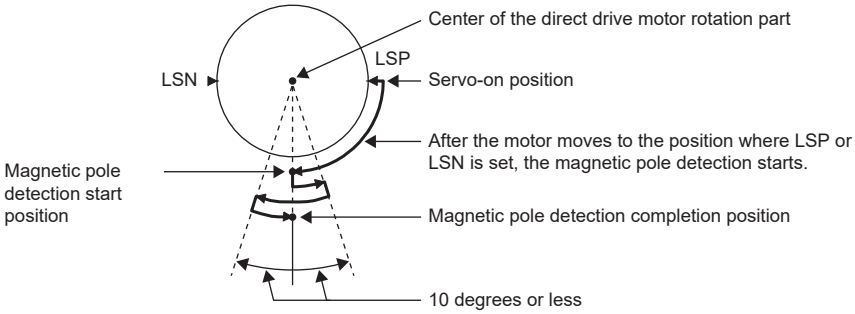

■For absolute position detection system

The magnetic pole detection is required in the following cases.

- When the system is set up (at initial startup of equipment)
- When the Z-phase pulse of the direct drive motor manufactured by Mitsubishi Electric is not turned on at the system setup (When the Z-phase pulse of the direct drive motor can be turned on manually, the magnetic pole detection is not required.)
- After a direct drive motor is replaced
- When [AL. 025 Absolute position erased] has occurred

Turn on the Z-phase pulse of the direct drive motor manufactured by Mitsubishi Electric in the JOG operation from the controller after the magnetic pole detection.

1. Execute the magnetic pole detection. Refer to the following.

☞ Page 563 For incremental system

2. After the completion of the magnetic pole detection, change [Pr. PL01.0 Servo motor magnetic pole detection selection] to "0" (magnetic pole detection disabled).

Servo parameter	Description
PL01.0	Servo motor magnetic pole detection selection 0: Magnetic pole detection disabled 1: Magnetic pole detection at initial servo-on after cycling the power 5: Magnetic pole detection at every servo-on Initial value: 1 (magnetic pole detection at initial servo-on after cycling the power)

To omit magnetic pole detection at each power-on, after magnetic pole detection, turn on the Z-phase pulse of the direct drive motor in the JOG operation and set [Pr. PL01.0] to "0".

The setting value "0" of [Pr. PL01.0] can be used on MR-J5-_G_ and MR-J5W_-_G_ servo amplifiers with firmware version D0 or later when the fully closed loop system is used with a Mitsubishi Electric-manufactured direct drive motor connected in the direct drive motor control mode.

Refer to the following for details.

☞ Page 586 USING A FULLY CLOSED LOOP SYSTEM

12.3 Startup [A]

When using a direct drive motor, set [Pr. PA01.1 Operation mode selection] to "6" (Direct drive motor control mode).

After power-on, the Z-phase mark of the direct drive motor manufactured by Mitsubishi Electric must pass the connector area once. In a system which prevents the direct drive motor from making a full rotation or more, install the direct drive motor in a position where the Z-phase mark can pass over the connector area.

Startup procedure

Start up the direct drive servo system with the following procedure.

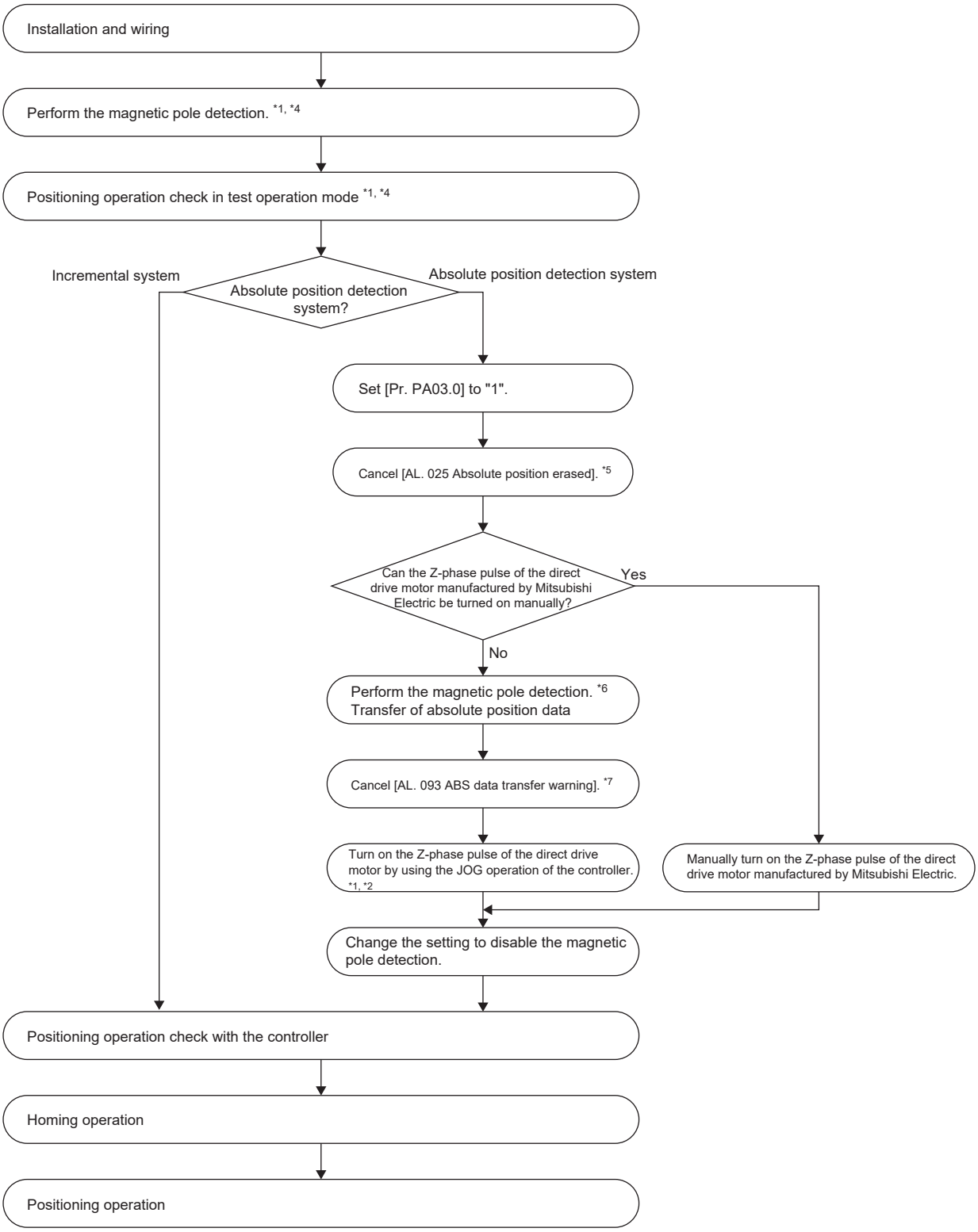

*1 Use MR Configurator2.
*2 In the absolute position detection system, turn on the Z-phase pulse of the direct drive motor while the servo amplifier power is on, and then cycle the power of the servo amplifier. Cycling the power confirms the absolute position. Without this operation, the absolute position will not be restored properly, and a warning will occur at the controller.
*3 If the Z-phase pulse of the direct drive motor manufactured by Mitsubishi Electric can be turned on manually, the Z-phase pulse does not have to be turned on by the magnetic pole detection or JOG operation.
For this operation, connect the encoder of the direct drive motor (manufactured by Mitsubishi Electric) and the servo amplifier, and turn on only the control circuit power supply of the servo amplifier (L11/L21) (turn off the main circuit power supply L1/L2/L3). Ensure safety at this time.
*4 Test operation cannot be performed in the absolute position detection system. To perform the test operation, set [Pr. PA03.0 Absolute position detection system selection] to "0" (Incremental system).
*5 After the servo amplifier is connected to the direct drive motor with an encoder cable, [AL. 025 Absolute position erased] occurs at the initial power-on. Cancel the alarm by turning off/on the power.
*6 When the magnetic pole detection is performed with the absolute position detection system by DIO transfer, [AL. 093 ABS data transfer warning] occurs.
☞ Page 584 Absolute position detection system [G] [B]
☞ Page 584 Absolute position detection system [A]
*7 To cancel [AL. 093 ABS data transfer warning], cycle SON (Servo-on) or perform homing.

Magnetic pole detection

Precautions

- The magnetic pole detection is not required for the configured absolute position detection system where the Z-phase pulse of the direct drive motor manufactured by Mitsubishi Electric can be turned on manually. For this operation, connect the direct drive motor encoder and the servo amplifier, and turn on the control circuit power supply of the servo amplifier. Ensure the safety at this time.
- For the magnetic pole detection of vertical axis with direct drive motors, refer to "Equipment configuration" in the following manual.

📖Direct Drive Motor User's Manual

Outline of magnetic pole detection

Before the positioning operation of the direct drive motor, perform the magnetic pole detection.
When starting up the equipment, use the test operation mode (positioning operation) of MR Configurator2.
The magnetic pole detection includes the position detection method and minute position detection method. Each method has advantages and disadvantages. Refer to the following for the characteristics of each method.
☞ Page 499 Outline of magnetic pole detection
Select a magnetic pole detection method suitable for the usage. In the initial value, the position detection method is selected.

Precautions on magnetic pole detection

- For the magnetic pole detection, the direct drive motor automatically starts to move simultaneously with turning-on of the servo-on command.
- If the magnetic pole detection is not executed properly, the direct drive motor may operate unexpectedly.
- Establish the machine configuration to use LSP (Forward rotation stroke end) and LSN (Reverse rotation stroke end). The machine may be damaged due to a collision without LSP and LSN.
- Assign LSP and LSN, and perform the magnetic pole detection also in the torque mode.
- At the magnetic pole detection, whether the direct drive motor moves in the positive or negative direction is unpredictable.
- Depending on the setting value of [Pr. PL09 Magnetic pole detection voltage level], an overload, overcurrent, magnetic pole detection alarm, or others may occur.
- For the machine whose friction becomes 30 % or more of the continuous thrust, the direct drive motor may not operate properly after the magnetic pole detection.
- For the horizontal shaft of the machine whose unbalanced thrust becomes 20 % or more of the continuous thrust, the direct drive motor may not operate properly after the magnetic pole detection.
- The magnetic pole detection may fail if performed simultaneously with multiple axes connected to each other (e.g. a tandem configuration). Perform the magnetic pole detection for each axis. At this time, set the axes for which the magnetic pole detection is not performed to servo-off.
- During the magnetic pole detection, the value of [Pr. PE47 Unbalanced torque offset] is regarded as "0".

Magnetic pole detection procedure

■Magnetic pole detection by position detection method

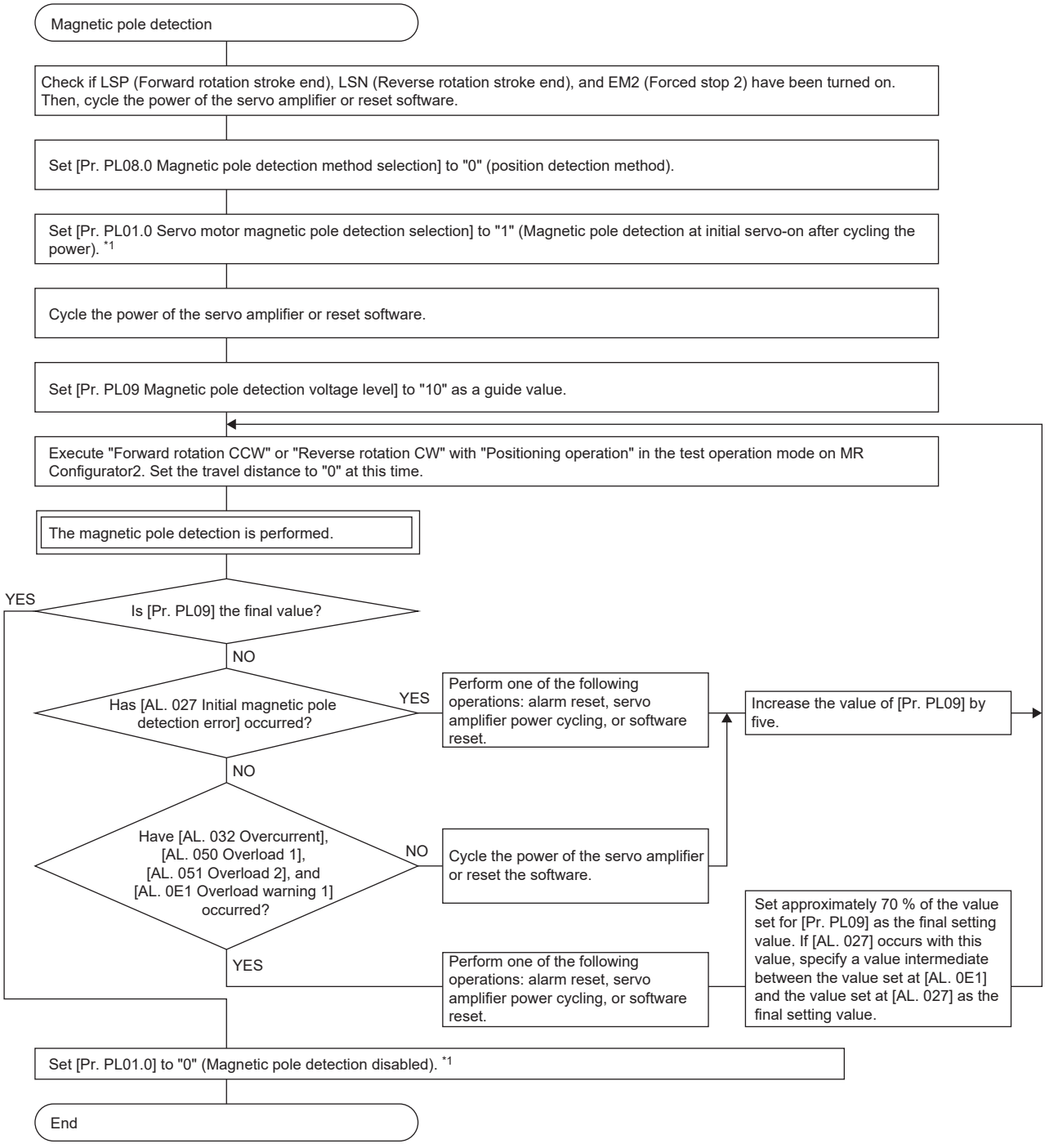

*1 For the incremental system, the setting of [Pr. PL01] is not required.

■Magnetic pole detection by minute position detection method

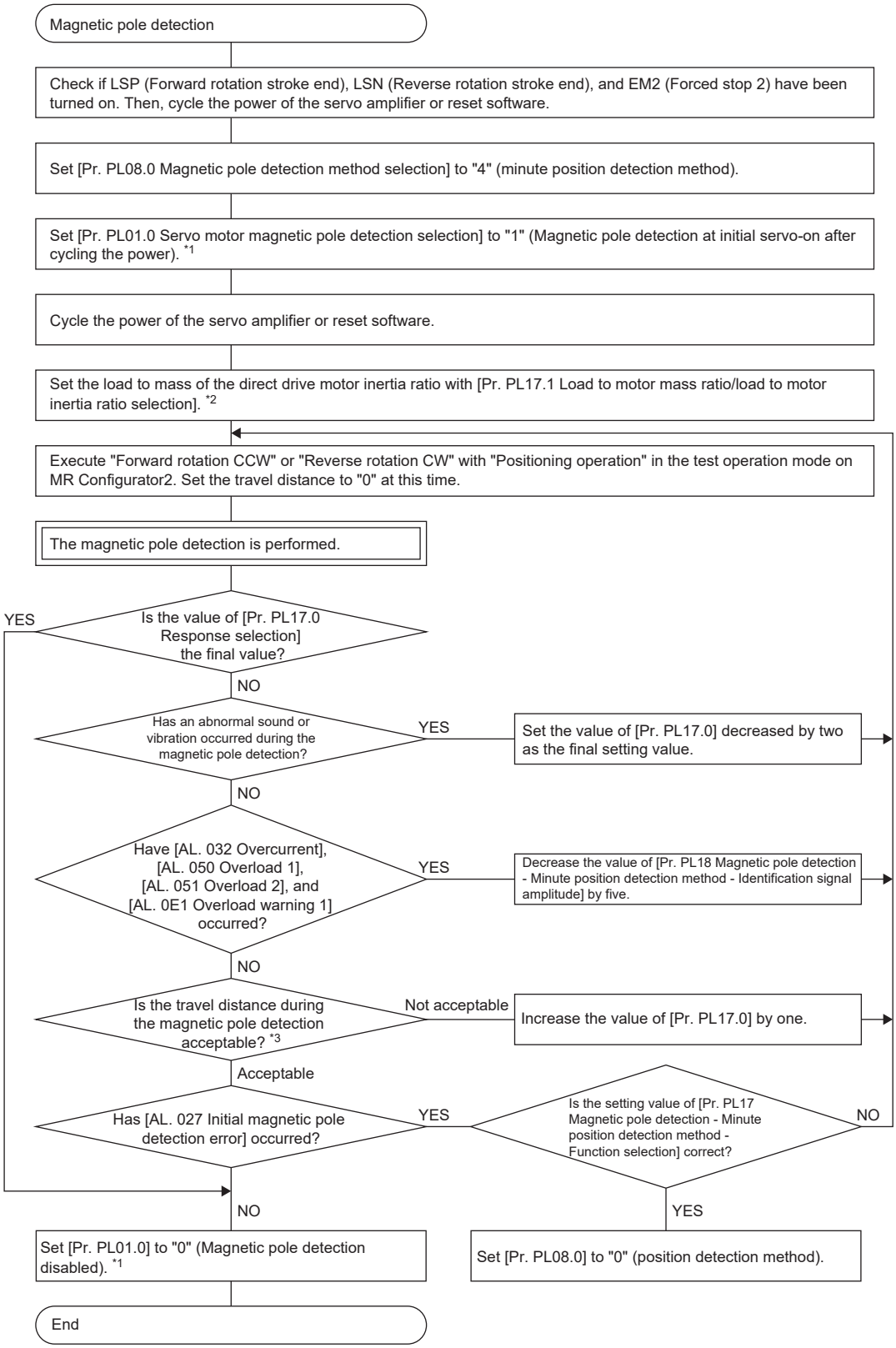

*1 For the incremental system, the setting of [Pr. PL01] is not required.

*2 If the load to mass of the direct drive motor inertia ratio is unknown, perform the magnetic pole detection by the position detection method, and then perform the auto tuning to set an estimated value.

*3 For the magnetic pole detection by the minute position detection method, the maximum travel distance at the magnetic pole detection must be 0.5 mm or less. To shorten the travel distance, increase the value of [Pr. PL17.0].

Stroke limit disabled setting at magnetic pole detection

When performing a magnetic pole detection without LSP (Forward rotation stroke end) and LSN (Reverse rotation stroke end), set [Pr. PL08.2 Magnetic pole detection - Stroke limit enabled/disabled selection].

Servo parameter	Description
PL08.2	Magnetic pole detection - Stroke limit enabled/disabled selection 0: Enabled 1: Disabled Initial value: 0 (enabled)

Magnetic pole detection method setting

Set the magnetic pole detection method by using [Pr. PL08.0 Magnetic pole detection method selection].
In the following cases, set the magnetic pole detection method to the minute position detection method.

- When a shortened travel distance at the magnetic pole detection is required
- When the magnetic pole detection by the position detection method is not completed properly

Servo parameter	Description
PL08.0	Magnetic pole detection method selection 0: Position detection method 4: Minute position detection method Initial value: 0 (position detection method)

For an absolute position detection system, set [Pr. PL01.0 Servo motor magnetic pole detection selection] to "1" (Magnetic pole detection at initial servo-on after cycling the power). After the completion of the magnetic pole detection, change [Pr. PL01.0] to "0" (magnetic pole detection disabled).

Servo parameter	Description
PL01.0	Servo motor magnetic pole detection selection 0: Magnetic pole detection disabled 1: Magnetic pole detection at initial servo-on after cycling the power 5: Magnetic pole detection at every servo-on Initial value: 1 (magnetic pole detection at initial servo-on after cycling the power)

Setting of magnetic pole detection voltage level by position detection method

For magnetic pole detection using the position detection method, set the voltage level with [Pr. PL09 Magnetic pole detection voltage level]. For the magnetic pole detection by the minute position detection method, the voltage level setting is not required.

■Guideline of servo parameter setting

Set the parameters by referring to the following table.

Servo status	Small ← Medium → Large (10 or less (initial value) 50 or more)	
Torque required for operation	Small	Large
Overload, overcurrent alarm	Hardly occurs	Easily occurs
Magnetic pole detection alarm	Easily occurs	Hardly occurs
Magnetic pole detection accuracy	Low	High

■Setting procedure

1. Detect the magnetic poles, then increase the setting value of [Pr. PL09 Magnetic pole detection voltage level] until [AL. 050 Overload 1], [AL. 051 Overload 2], [AL. 033 Overvoltage], [AL. 0E1 Overload warning 1], and [AL. 0EC Overload warning 2] occur. Increase the setting value by five as a guide value. When these alarms and warnings occur during the magnetic pole detection with MR Configurator2, the test operation of MR Configurator2 automatically completes and the servo-off state is established.
2. Set the value to approximately 70 % of the value which triggers [AL. 050], [AL. 051], [AL. 033], [AL. 0E1], and [AL. 0EC]. If [AL. 027 Initial magnetic pole detection error] occurs with this value, specify a value intermediate between the value set at occurrence of [AL. 050], [AL. 051], [AL. 033], [AL. 0E1], and [AL. 0EC] and the value set at the magnetic pole detection alarm occurrence as the final setting value.
3. Perform the magnetic pole detection again with the final setting value, and make sure that the accuracy of the magnetic pole detection is as required.

■Setting example

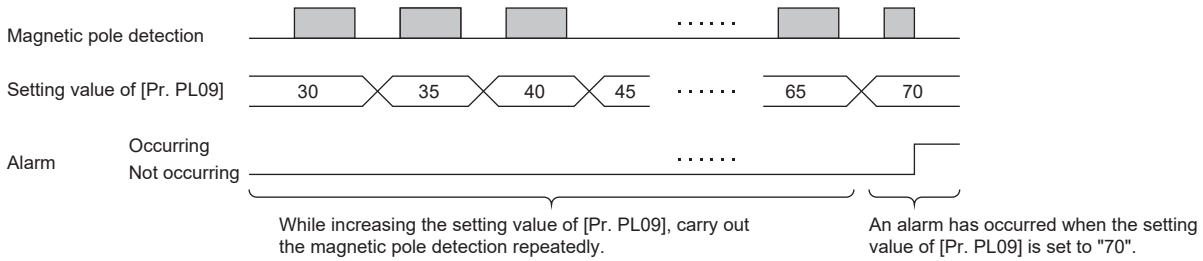

In this example, set the final setting value of [Pr. PL09] to 49 (setting value at the alarm occurrence = 70 × 0.7).

Setting of response performance and load to motor inertia ratio by minute position detection method

When using the minute position detection method, set the response performance with [Pr. PL17.0 Response selection], the load to motor inertia ratio with [Pr. PL17.1 Load to motor mass ratio/load to motor inertia ratio selection]. If the load to mass of the direct drive motor inertia ratio is unknown, perform the magnetic pole detection by the position detection method, and then perform the auto tuning to set an estimated value.

• [PL17.0 Response selection]

Setting value	Responsiveness
0	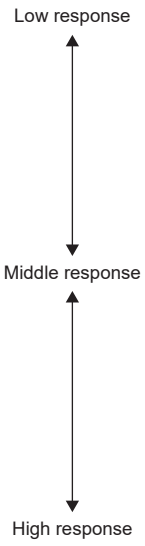
1	
2	
3	
4	
5	
6	
7	
8	
9	
A	
B	
C	
D	
E	
F	

Initial value: 0

• [Pr. PL17.1 Load to motor mass ratio/load to motor inertia ratio selection]

Setting value	Load to motor mass ratio/load to motor inertia ratio
0	10 times or less
1	10 multiplier
2	20 multiplier
3	30 multiplier
4	40 multiplier
5	50 multiplier
6	60 multiplier
7	70 multiplier
8	80 multiplier
9	90 multiplier
A	100 multiplier
B	110 multiplier
C	120 multiplier
D	130 multiplier
E	140 multiplier
F	150 times or more

Initial value: 0

Setting of identification signal amplitude by minute position detection method

If [AL. 032 Overcurrent], [AL. 050 Overload 1], [AL. 051 Overload 2], or [AL. 0E1 Overload warning 1] occurs at the magnetic pole detection by the minute position detection method, set a smaller value for [Pr. PL18 Magnetic pole detection - Minute position detection method - Identification signal amplitude]. Basically, [Pr. PL18] does not need to be changed from the initial value.

Operation at magnetic pole detection

Precautions

- After the magnetic pole detection, check the positioning accuracy with the test operation (positioning operation function) of MR Configurator2.
- The magnetic pole detection improves in accuracy when performed with no load.

■For incremental system

For the incremental system, the magnetic pole detection is required every time the power is turned on or the software is reset. By turning on the servo-on command from the controller after the power-on, the magnetic pole detection is automatically carried out. Therefore, there is no need to set [Pr. PL01.0 Servo motor magnetic pole detection selection] for executing magnetic pole detection.

- Timing chart

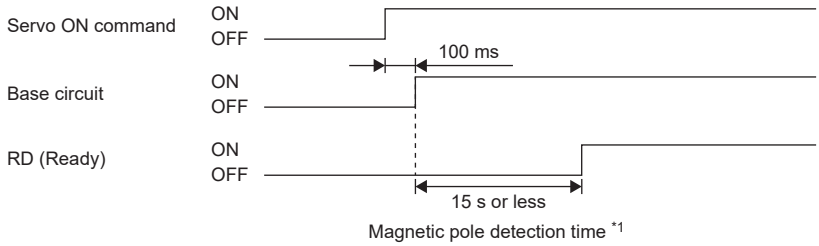

*1 The magnetic pole detection time indicates the operation time when LSP (Forward rotation stroke end) and LSN (Reverse rotation stroke end) are on.

- Direct drive motor movement (when LSP and LSN are on)

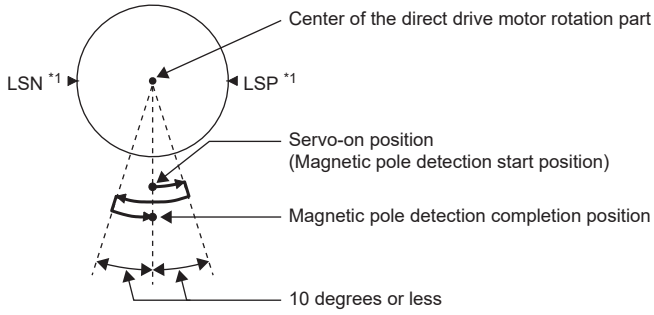

*1 When LSP (Forward rotation stroke end) or LSN (Reverse rotation stroke end) is turned off during the magnetic pole detection, the magnetic pole detection is carried on to the opposite direction. When both LSP and LSN are off, [AL. 027 Initial magnetic pole detection error] occurs.

• Direct drive motor movement (when LSP or LSN is off)

When LSP or LSN is off at servo-on, the magnetic pole detection is performed as follows.

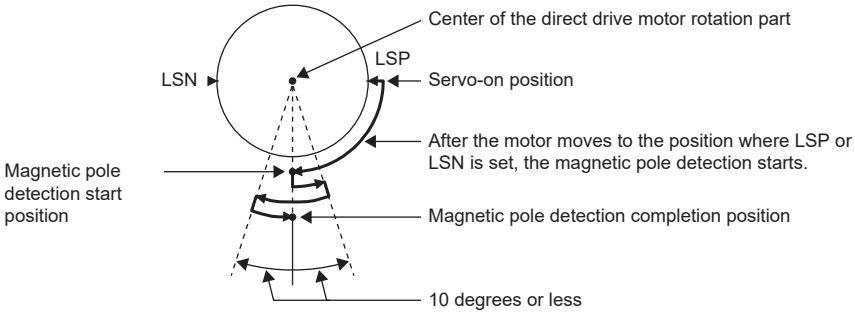

■For absolute position detection system

The magnetic pole detection is required in the following cases.

- When the system is set up (at initial startup of equipment)
- When the Z-phase pulse of the direct drive motor manufactured by Mitsubishi Electric is not turned on at the system setup (When the Z-phase pulse of the direct drive motor can be turned on manually, the magnetic pole detection is not required.)
- After a direct drive motor is replaced
- When [AL. 025 Absolute position erased] has occurred

Turn on the Z-phase pulse of the direct drive motor manufactured by Mitsubishi Electric in the JOG operation from the controller after the magnetic pole detection.

1. Execute the magnetic pole detection. Refer to the following.

☞ Page 563 Operation at magnetic pole detection

2. After the completion of the magnetic pole detection, change [Pr. PL01.0 Servo motor magnetic pole detection selection] to "0" (magnetic pole detection disabled).

Servo parameter	Description
PL01.0	Servo motor magnetic pole detection selection 0: Magnetic pole detection disabled 1: Magnetic pole detection at initial servo-on after cycling the power 5: Magnetic pole detection at every servo-on Initial value: 1 (magnetic pole detection at initial servo-on after cycling the power)

To omit magnetic pole detection at each power-on, after magnetic pole detection, turn on the Z-phase pulse of the direct drive motor in the JOG operation and set [Pr. PL01.0] to "0".

The setting value "0" of [Pr. PL01.0] can be used on servo amplifiers with firmware version D0 or later when the fully closed loop system is used with a Mitsubishi Electric-manufactured direct drive motor connected in the direct drive motor control mode. Refer to the following for details.

☞ Page 586 USING A FULLY CLOSED LOOP SYSTEM

12.4 Basic functions

Operation from controller

For the incremental system, the magnetic pole detection is automatically performed at the first servo-on after power-on. Before performing the positioning operation, check that the servo amplifier is in servo-on status.

Servo control error detection function

If the servo control becomes unstable for some reason, the direct drive motor may not operate properly. To detect this state and to stop operation, the servo control error detection function is used as a protective function.
The servo control error detection function has three types of detection methods: position deviation, speed deviation, and torque deviation. An error is detected when each method is enabled with [Pr. PL04.0]. The detection level can be changed with [Pr. PL05], [Pr. PL06], and [Pr. PL07].

Precautions

- For the servo control error detection function, the position and speed deviation error detections are enabled by default. ([Pr. PL04.0 [AL. 042 Servo control error] detection function selection]: 3)

Servo control error detection selection function

Select the servo control error detection function.

- [Pr. PL04.0 [AL. 042 Servo control error] detection function selection]

Refer to the following table.

Setting value	Position deviation error detection	Speed deviation error detection	Torque deviation error detection
1	Enabled	Disabled	Disabled
2	Disabled	Enabled	Disabled
3	Enabled	Enabled	Disabled
4	Disabled	Disabled	Enabled
5	Enabled	Disabled	Enabled
6	Disabled	Enabled	Enabled
7	Enabled	Enabled	Enabled

Initial value: 3

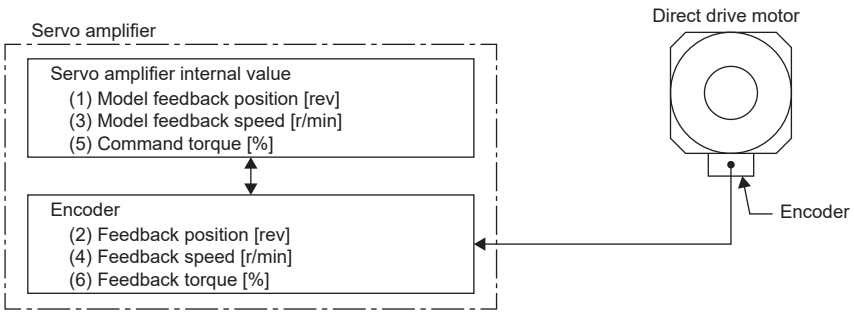

■Position deviation error detection

Set [Pr. PL04.0 [AL. 042 Servo control error] detection function selection] to "1" to enable the position deviation error detection.

Servo parameter	Description
PL04.0	[AL. 042 Servo control error] detection function selection 1: Position deviation error detection enabled

If the difference between the model feedback position (1) and the feedback position (2) in the figure is equal to or more than the value of [Pr. PL05 Position deviation error detection level] (1 (0.01 rev) to 1000 (10 rev)), [AL. 042.1 Servo control error based on position deviation] will occur and the direct drive motor will stop. The initial value of this detection level is 0.09 rev. Change the setting value as necessary.

■Speed deviation error detection

Set [Pr. PL04.0] to "2" to enable the speed deviation error detection.

Servo parameter	Description
PL04.0	[AL. 042 Servo control error] detection function selection 2: Speed deviation error detection enabled

If the difference between the model feedback speed (3) and the feedback speed (4) in the figure is equal to or more than the value of [Pr. PL06 Speed deviation error detection level] (1 r/min to 2000 r/min), [AL. 042.2 Servo control error based on speed deviation] will occur and the direct drive motor will stop. The initial value of this detection level is 100 r/min. Change the setting value as necessary.

■Torque deviation error detection

Set [Pr. PL04.0] to "4" to enable torque deviation error detection.

Servo parameter	Description
PL04.0	[AL. 042 Servo control error] detection function selection 4: Torque deviation error detection enabled

If the difference between the command torque (5) and the feedback torque (6) in the figure is equal to or more than the value of [Pr. PL07 Torque/thrust deviation error detection level] (1 % to 1000 %), [AL. 042.3 Servo control error based on torque/thrust deviation] will occur and the direct drive motor will stop. The initial value of this detection level is 100 %. Change the setting value as necessary.

■Detecting multiple deviation errors

When [Pr. PL04.0] is set as follows, multiple deviation errors can be detected. Refer to the following for the error detection method.

☞ Page 575 Position deviation error detection
☞ Page 575 Speed deviation error detection
☞ Page 575 Torque deviation error detection

• [Pr. PL04.0 [AL. 042 Servo control error] detection function selection]

Setting value	Position deviation error detection	Speed deviation error detection	Torque deviation error detection
1	○	—	—
2	—	○	—
3	○	○	—
4	—	—	○
5	○	—	○
6	—	○	○
7	○	○	○

Initial value: 3

Servo control error reset by controller reset [G] [B]

Servo parameter	Description
PL04.3	[AL. 042 Servo control error] detection controller reset condition selection 0: Reset disabled (reset by powering off/on or software reset enabled) 1: Reset enabled Initial value: 0 (reset disabled)

When [Pr. PL04.3 [AL. 042 Servo control error] detection controller reset condition selection] is set to "1" (reset enabled), [AL. 042.1 Servo control error based on position deviation], [AL. 042.2 Servo control error based on speed deviation], and [AL. 042.3 Servo control error based on torque/thrust deviation] can be canceled by resetting the controller. When [Pr. PL04.3] is "0" (reset disabled (reset by powering off/on or software reset enabled)), [AL. 042.1], [AL. 042.2], and [AL. 042.3] can be canceled only by cycling the servo amplifier power or resetting the software.

12.5 Characteristics

Overload protection characteristics

Direct drive motor	Graph of overload protection characteristics
TM-RFM002C20 TM-RFM004C20 TM-RFM006C20 TM-RFM006E20 TM-RFM012E20 TM-RFM018E20 TM-RFM012G20 TM-RFM040J10	☞ Page 577 Characteristic a
TM-RFM120J10	☞ Page 578 Characteristic b
TM-RFM048G20 TM-RFM072G20 TM-RFM240J10	☞ Page 578 Characteristic c
TM-RG2M002C30 TM-RU2M002C30 TM-RG2M004E30 TM-RU2M004E30 TM-RG2M009G30 TM-RU2M009G30	☞ Page 579 Characteristic d

Characteristic a

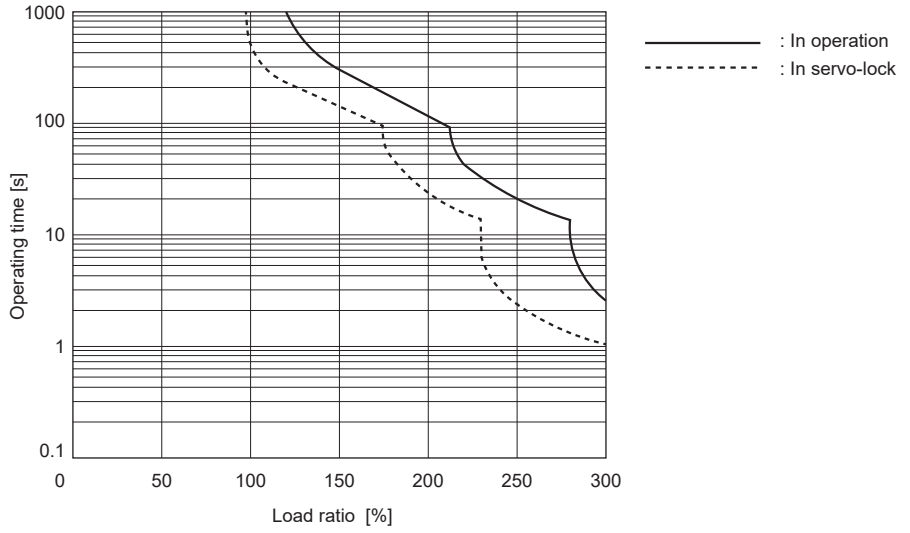

Characteristic b

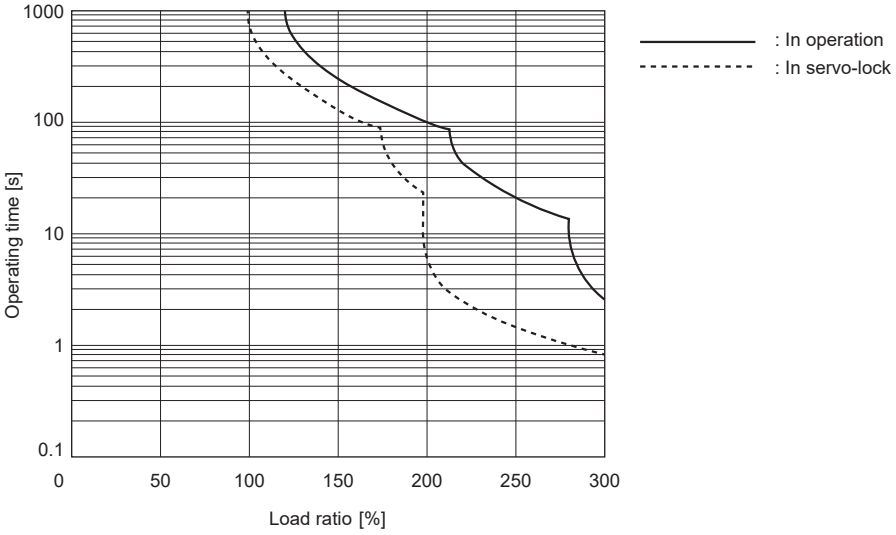

Characteristic c

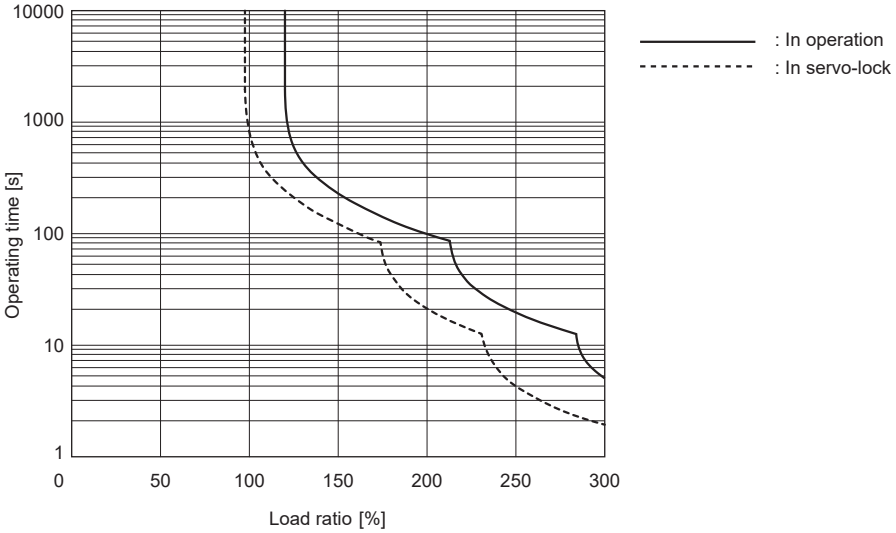

Characteristic d

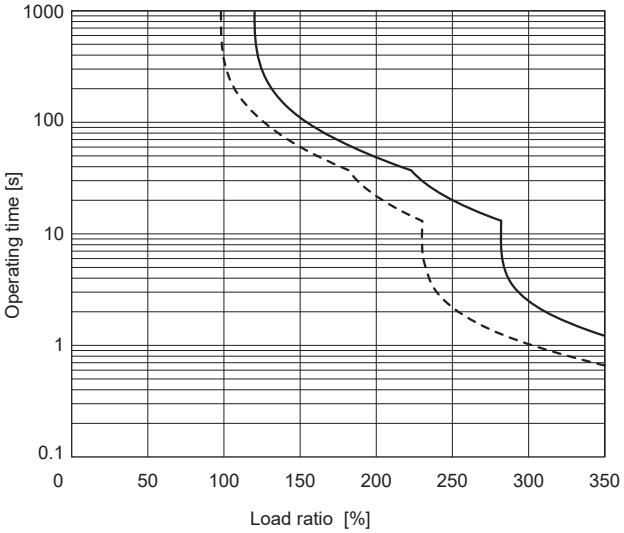

Power supply capacity and generated loss (1-axis servo amplifier)

Direct drive motor	Servo amplifier	Power supply capacity [kVA]	Servo amplifier-generated heat [W]		Area required for heat dissipation [m^2]
			At rated output	At servo-off	
TM-RG2M002C30	MR-J5-20_	0.25	25	15	0.5
TM-RU2M002C30					
TM-RG2M004E30	MR-J5-20_	0.5	25	15	0.5
TM-RU2M004E30					
TM-RG2M004E30	MR-J5-40_	0.7	35	15	0.7
TM-RU2M004E30					
TM-RG2M009G30		0.9	35	15	0.7
TM-RU2M009G30					
TM-RFM002C20	MR-J5-20_	0.25	25	15	0.5
TM-RFM004C20	MR-J5-40_	0.38	35	15	0.7
TM-RFM006C20	MR-J5-60_	0.53	40	15	0.8
TM-RFM006E20		0.46	40	15	0.8
TM-RFM012E20	MR-J5-70_	0.81	50	15	1.0
TM-RFM018E20	MR-J5-100_	1.3	50	15	1.0
TM-RFM012G20	MR-J5-70_	0.71	50	15	1.0
TM-RFM048G20	MR-J5-350_	2.7	130	20	2.6
TM-RFM072G20		3.8	130	20	2.6
TM-RFM040J10	MR-J5-70_	1.2	50	15	1.0
TM-RFM120J10	MR-J5-350_	3.4	130	20	2.6
TM-RFM240J10	MR-J5-500_	6.6	160	25	3.2

Power supply capacity and generated loss (multi-axis servo amplifier)

The following tables indicate the losses generated by servo amplifiers under rated load. For thermal design of an enclosed type cabinet, use the values in the tables in consideration for the worst operating conditions including environments and operation patterns. The actual amount of generated heat depends on the frequency of operation and will be between the "At rated output" and "At servo-off" values. When the direct drive motor is run at less than the rated speed, the power supply capacity will be smaller than the calculated value, but the servo amplifier's generated heat will not change.

Calculation method of power supply capacity

Calculate the power supply capacity for one servo amplifier from the following tables.

■Power supply capacity for one servo amplifier at rated output

Servo amplifier	Power supply capacity [kVA] *1
MR-J5W2-22_	Total power supply capacity of all direct drive motors to be connected (A)
MR-J5W2-44_	
MR-J5W2-77_	
MR-J5W2-1010_	
MR-J5W3-222_	
MR-J5W3-444_	

*1 The power supply capacity will vary according to the power impedance. This value is applicable when the power factor improving reactor is not used.

■Servo amplifier power supply capacity for one direct drive motor

Direct drive motor	Power supply capacity [kVA] (A) *1
TM-RFM002C20	0.25
TM-RFM004C20	0.38
TM-RFM006C20	0.53
TM-RFM006E20	0.46
TM-RFM012E20	0.81
TM-RFM018E20	1.3
TM-RFM012G20	0.71
TM-RFM040J10	1.2
TM-RG2M002C30	0.25
TM-RU2M002C30	0.25
TM-RG2M004E30	0.5 (0.7)
TM-RU2M004E30	0.5 (0.7)
TM-RG2M009G30	0.9
TM-RU2M009G30	0.9

*1 The value inside ( ) applies when the torque is increased.

Calculation method of the amount of heat generated by the servo amplifier

Calculate the amount of heat generated by one servo amplifier from the following tables.

■Amount of heat generated by one servo amplifier at rated output

Servo amplifier	Servo amplifier-generated heat [W] *1	
	At servo-off (C)	At rated output
MR-J5W2-22_	20	Sum of the total amount of heat generated by the servo amplifier for all direct drive motors to be connected (B) and the amount of heat generated by the servo amplifier at servo-off (C)
MR-J5W2-44_	20	
MR-J5W2-77_	20	
MR-J5W2-1010_	20	
MR-J5W3-222_	25	
MR-J5W3-444_	25	

*1 The values stated for heat generated by the servo amplifier do not take into account the heat generated during regeneration. To calculate heat generated by the regenerative option, refer to the following.
☞ Page 269 Regenerative option

■Amount of heat generated by one servo amplifier for one direct drive motor

Direct drive motor	Servo amplifier-generated heat [W] (B) *1
TM-RFM002C20	25
TM-RFM004C20	35
TM-RFM006C20	40
TM-RFM006E20	40
TM-RFM012E20	50
TM-RFM018E20	50
TM-RFM012G20	50
TM-RFM040J10	50
TM-RG2M002C30	25
TM-RU2M002C30	25
TM-RG2M004E30	25 (35)
TM-RU2M004E30	25 (35)
TM-RG2M009G30	35
TM-RU2M009G30	35

*1 The value inside ( ) applies when the torque is increased.

Dynamic brake characteristics

TM-RFM_C20

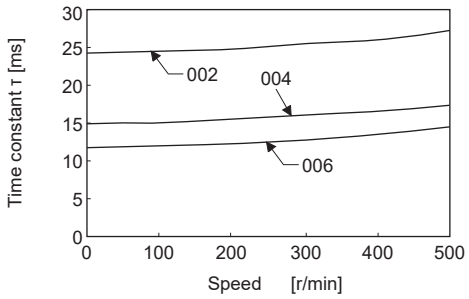

TM-RFM_E20

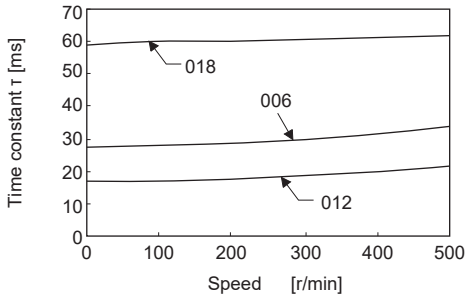

TM-RFM_G20

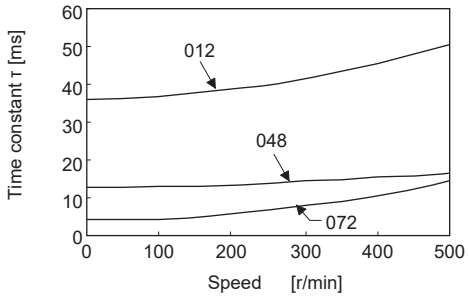

TM-RFM_J10

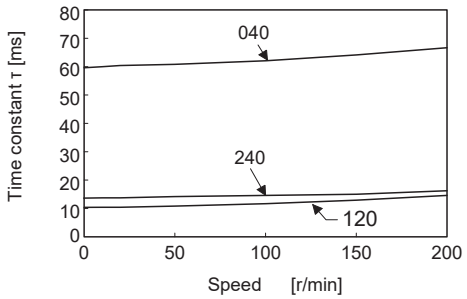

TM-RG2M002C30, TM-RU2M002C30

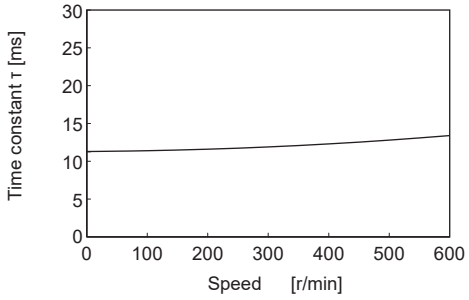

TM-RG2M004E30, TM-RU2M004E30

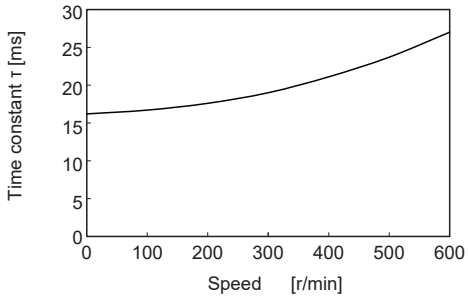

TM-RG2M009G30, TM-RU2M009G30

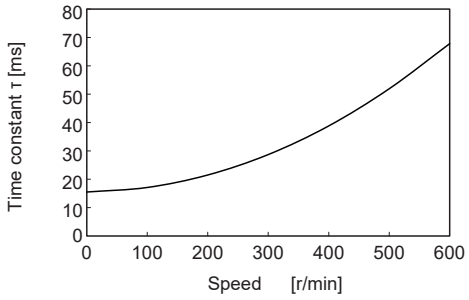

Permissible load to motor inertia ratio when the dynamic brake is used

Direct drive motor	Permissible load to motor inertia ratio [multiplier]
TM-RFM_C20	100 (300)
TM-RFM_E20	
TM-RG2M002C30	
TM-RU2M002C30	
TM-RFM_G20	50 (300)
TM-RFM_J10	50 (200)
TM-RG2M_E30	20 (80)
TM-RG2M_G30	
TM-RU2M_E30	
TM-RU2M_G30	

12.6 Absolute position detection system [G] [B]

☞ Page 412 ABSOLUTE POSITION DETECTION SYSTEM

Precautions

- To configure the absolute position detection system by using the direct drive motor manufactured by Mitsubishi Electric, batteries and the absolute position storage unit (MR-BTAS01) are required.
- For the encoder cable and the absolute position storage unit, refer to "WIRING OPTION".

📖Direct Drive Motor User's Manual

- If the absolute position storage unit (MR-BTAS01) is replaced, the absolute position is erased. In this case, start up the direct drive motor again and perform homing.
- Replace the battery while the control circuit power is on. If the battery is replaced with the control circuit power supply turned off, [AL. 025 Absolute position erased] occurs. A battery cannot be replaced using the battery connection cable (MR-J3BTCBL03M).
- If the encoder cable is disconnected, [AL. 25 Absolute position erased] occurs.

12.7 Absolute position detection system [A]

When the system is used with absolute position detection system by DIO ([Pr. PA03.0 Absolute position detection system selection] set to "1" (Enabled)) with the following conditions, the initial servo-on after power-on triggers the magnetic pole detection and [AL. 093 ABS data transfer warning] will occur.

- The magnetic pole detection is enabled at initial servo-on ([Pr. PL01.0 Servo motor magnetic pole detection selection] set to "1" (Magnetic pole detection at initial servo-on after cycling the power).
- The Z-phase pulse of the direct drive motor manufactured by Mitsubishi Electric has not turned on.

When the magnetic pole detection is performed with the absolute position detection system by DIO, a deviation occurs between the absolute position data of the servo amplifier side and controller side. If the operation is continued, position mismatch occurs. Therefore, [AL. 093 ABS data transfer warning] occurs on the servo amplifier side. To cancel [AL. 093 ABS data transfer warning], cycle SON (Servo-on) or perform homing.

Precautions

- To configure the absolute position detection system by using the direct drive motor manufactured by Mitsubishi Electric, batteries and the absolute position storage unit (MR-BTAS01) are required.
- For the encoder cable and the absolute position storage unit, refer to "WIRING OPTION".

📖Direct Drive Motor User's Manual

- If the absolute position storage unit (MR-BTAS01) is replaced, the absolute position is erased. In this case, start up the direct drive motor again and perform homing.
- Replace the battery while the control circuit power is on. If the battery is replaced with the control circuit power supply turned off, [AL. 25 Absolute position erased] occurs. A battery cannot be replaced using the battery connection cable (MRJ3BTCBL03M).
- If the encoder cable is disconnected, [AL. 025 Absolute position erased] occurs.
- Timing chart at power-on under the condition of performing magnetic pole detection

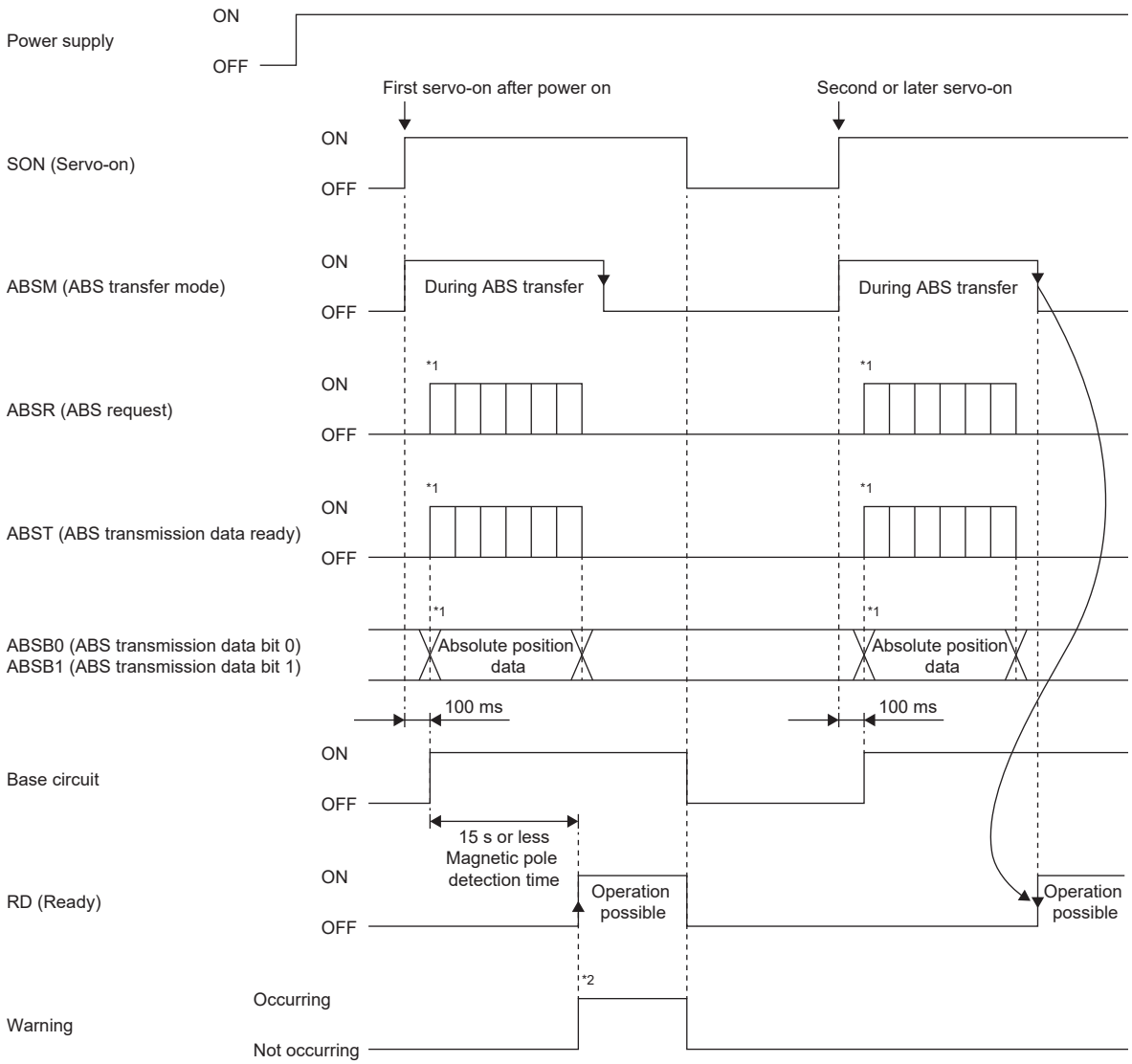

*1 ☞ Page 428 Absolute position data transfer protocol

*2 When the magnetic pole detection is performed, [AL. 093 ABS data transfer warning] occurs.

13 USING A FULLY CLOSED LOOP SYSTEM

13.1 Precautions

- A fully closed loop system cannot be used for a 3-axis servo amplifier. If the fully closed loop system is enabled for a 3-axis servo amplifier, [AL. 037 Parameter error] occurs.
- Fully closed loop systems can be used with servo amplifiers running firmware version A5 or later.
- A fully closed loop system can be used in the position mode and positioning mode.
- Select a load-side encoder of which the number of load-side encoder pulses per servo motor revolution satisfies the following conditions.

4096 (2^{12}) ≤ Number of load-side encoder pulses per servo motor revolution ≤ 67108864 (2^{26})

- Load-side encoders support HK series servo motors and linear scale and A/B/Z-phase differential output type encoders. For the load-side encoders that can be used with the MR-J5 series, contact your local sales office.
- [G]: When a fully closed loop system is used for a 1-axis servo amplifier, if a communication cycle shorter than 125 μs is set, [AL. 09E.A Communication cycle setting warning] occurs.
- [G]: When a fully closed loop system is used for a 2-axis servo amplifier, if a communication cycle shorter than 250 μs is set, [AL. 09E.A] occurs.
- A/B/Z-phase differential output rotary encoders cannot be connected to the servo motor side.
- [G] [A]: In the direct drive motor control mode, when the fully closed loop system is used, the magnetic pole detection is required every time the power is cycled.
- [G] [A]: The setting value "0" (magnetic pole detection disabled) of [Pr. PL01.0 Servo motor magnetic pole detection selection] can be used on servo amplifiers with firmware version D0 or later when the fully closed loop system is used with a Mitsubishi Electric-manufactured direct drive motor connected in the direct drive motor control mode.
- When the servo amplifier is in the factory settings and the controller is connected to it for the first time, turning on the power in the fully closed loop control mode with the absolute position detection system enabled may trigger [AL. 1A.5 Servo motor combination error 3]. After setting [Pr. PA03.1 Servo motor replacement preparation] to "1" (enabled), cycle the power and then deactivate [AL. 1A.5]. After deactivating [AL. 1A.5], perform homing again.

When a fully closed loop system is configured with equipment other than the MR-J5-_-RJ or MR-J5-_G_-HS_ servo amplifier

When a fully closed loop system is configured with equipment other than the MR-J5-_-RJ_ or MR-J5-_G_-HS_ servo amplifier, the following restrictions apply.

- A/B/Z-phase differential output type encoders cannot be used.
- Only the load-side encoders and servo motor encoders with the two-wire type communication method can be used. The load-side encoders and servo motor encoders with the four-wire type communication method cannot be used.
- When HK series rotary servo motors are used for drive and load-side encoders, four-wire type encoder cables cannot be used.

13.2 Functions and configuration

Outline

Either a semi closed loop system or a fully closed loop system can be selected as a control method for this servo amplifier. In addition, the semi closed loop control, fully closed loop control, or dual feedback control can be selected by the setting of [Pr. PE08 Fully closed loop dual feedback filter] in the fully closed loop system.

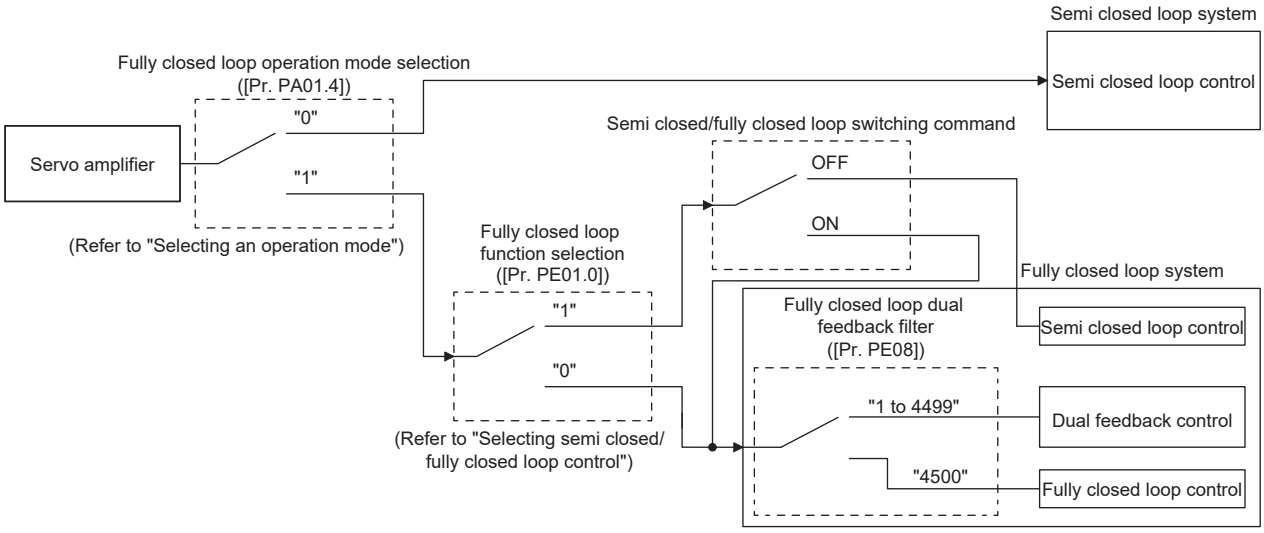

The following table lists the characteristics of each control method.

Control	Description	
Semi closed loop control	Feature	The position is controlled with servo motor-side information.
	Advantage	Because this control method is not susceptible to machine resonance, it can increase the gain of the servo amplifier and shorten the settling time.
	Disadvantage	Even when the servo motor side is stopped, the load side may vibrate or accuracy at the load side may not be achieved.
Dual feedback control	Feature	The position is controlled with servo motor-side information and load-side information.
	Advantage	The gain during operation can be increased and thus the settling time can be shortened by switching the information type to control the position as follows: the servo motor-side information during operation and the load-side information during stops. When the servo motor stops, it stops with the accuracy at the load side.
Fully closed loop control	Feature	The position is controlled with load-side information.
	Advantage	Accuracy at the load side is achieved not only during stops, but also during operation.
	Disadvantage	Because this control method is susceptible to machine resonance, it may be unable to increase the gain of the servo amplifier.

Function block diagram

Fully closed loop system block diagram

A fully closed loop system block diagram is shown below. For a fully closed loop system, the position is controlled in the units of the load-side encoder.

■MR-J5-_G_/MR-J5W_-_G_/MR-J5-_B_/MR-J5W_-_B_

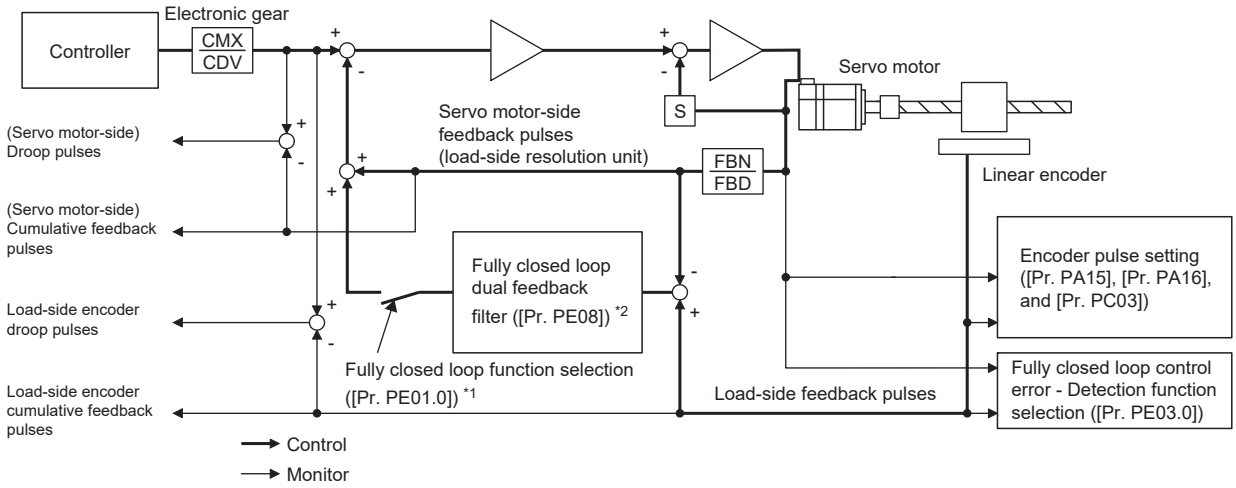

■MR-J5-_A_

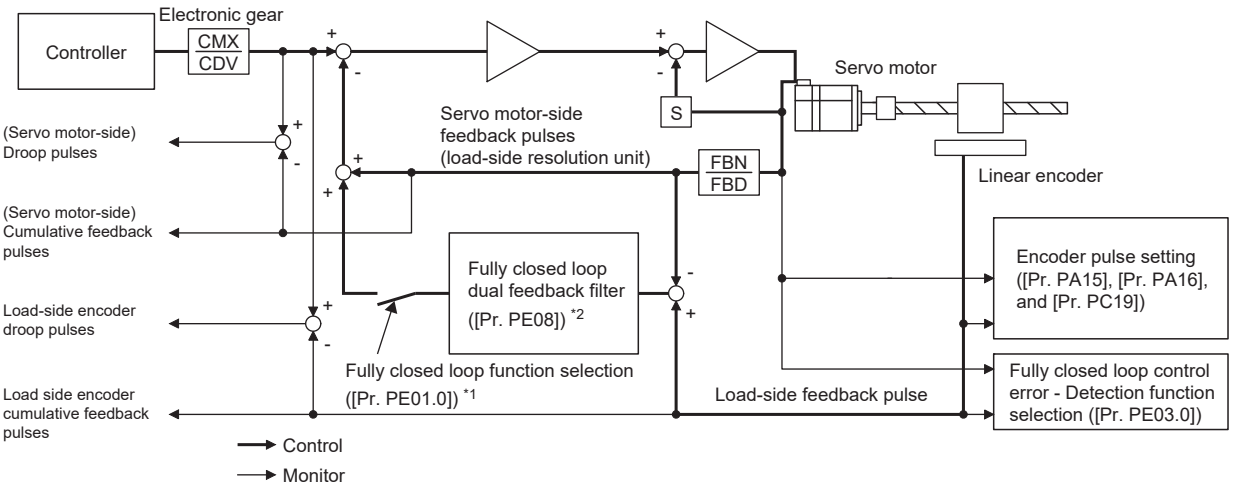

*1 A switch between semi closed loop control and fully closed loop control can be set with [Pr. PE01.0 Fully closed loop function selection]. For semi closed loop control, regardless of whether the servo motor stops or rotates, the position is always controlled based on servo motor encoder position information.

*2 For fully closed loop control, dual feedback control, which combines servo motor feedback signals and load-side encoder feedback signals, can be enabled with [Pr. PE08 Fully closed loop dual feedback filter]. When dual feedback control is enabled, the control performance is improved by switching the control method to fully closed loop control when the servo motor is stopped and to semi closed loop control when the servo motor is operating. When [Pr. PE08] is set to "4500", fully closed loop control is always enabled.

Dual feedback filter equivalent block diagram

The following shows a dual feedback filter equivalent block diagram for dual feedback control.

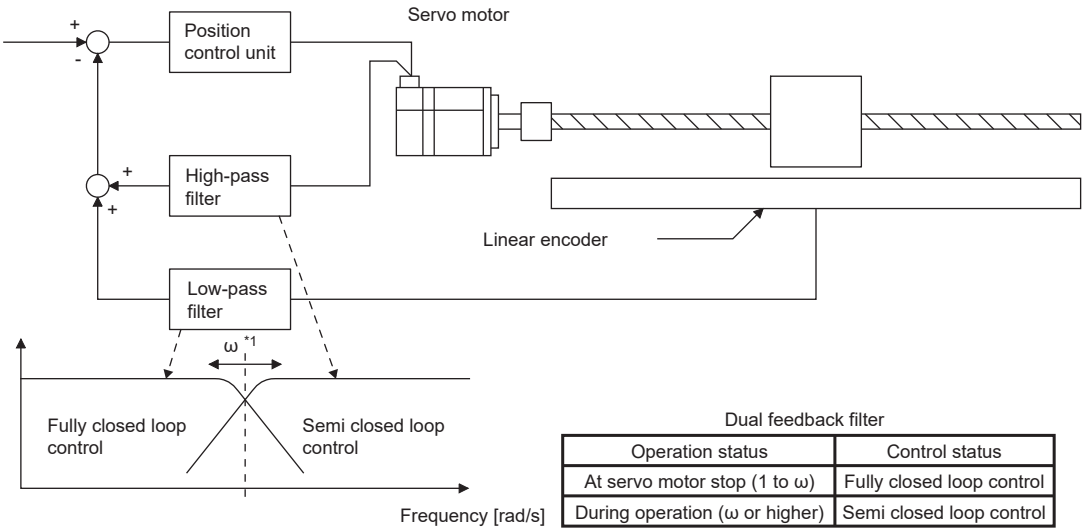

Dual feedback filter

Operation status	Control status
At servo motor stop (1 to ω)	Fully closed loop control
During operation (ω or higher)	Semi closed loop control

*1 Set "ω" (dual feedback filter band) with [Pr. PE08 Fully closed loop dual feedback filter].

Operation mode and load-side encoder combinations [G] [A]

Refer to the following table for availability of the fully closed loop system.

Load-side encoder	[Pr. PA01.1 Operation mode selection]		
	"0" Standard control mode	"4" Linear servo motor control mode	"6" Direct drive motor control mode
For linear encoders	○	[AL. 037.2]	○
Rotary servo motor manufactured by Mitsubishi Electric	○	[AL. 037.2]	○
Direct drive motor manufactured by Mitsubishi Electric	[AL. 01A.3]	[AL. 037.2]	[AL. 01A.3]
A/B/Z-phase differential output rotary encoder	○ *1	[AL. 037.2]	[AL. 01A.3]

*1 Can be used with servo amplifiers that have a CN2L connector. If servo amplifiers do not have a CN2L connector, [AL. 070] will occur. For servo amplifiers without a CN2L connector, use two-wire type encoder cables. Note that four-wire type serial interface-compatible encoders and A/B/Z-phase pulse train interface-compatible encoders cannot be used.

Operation mode and load-side encoder combinations [B]

Refer to the following table for availability of the fully closed loop system.

Load-side encoder	[Pr. PA01.1 Operation mode selection]		
	"0" Standard control mode	"4" Linear servo motor control mode	"6" Direct drive motor control mode
For linear encoders	○	[AL. 037.2]	[AL. 037.2]
Rotary servo motor manufactured by Mitsubishi Electric	○	[AL. 037.2]	[AL. 037.2]
Direct drive motor manufactured by Mitsubishi Electric	[AL. 01A.3]	[AL. 037.2]	[AL. 01A.3]
A/B/Z-phase differential output rotary encoder	○ *1	[AL. 037.2]	[AL. 01A.3]

*1 Can be used with servo amplifiers that have a CN2L connector. If servo amplifiers do not have a CN2L connector, [AL. 070] will occur. For servo amplifiers without a CN2L connector, use two-wire type encoder cables. Note that four-wire type serial interface-compatible encoders and A/B/Z-phase pulse train interface-compatible encoders cannot be used.

For linear encoders

■Servo amplifier without CN2L

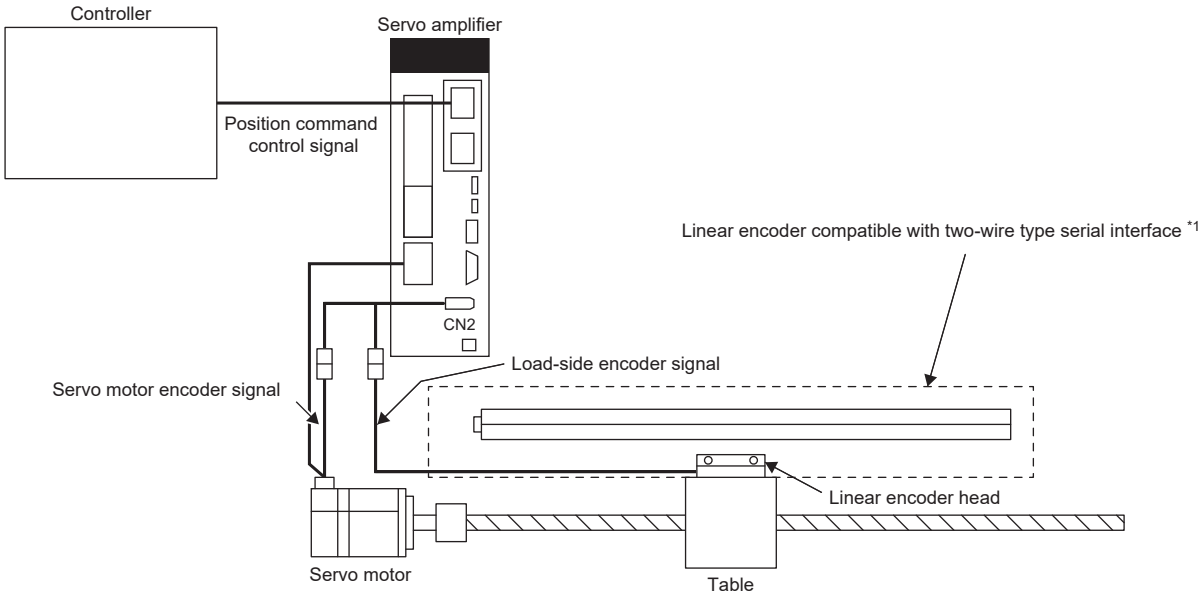

*1 When using an absolute position linear encoder, an absolute position detection system can be supported.
In that case, batteries are unnecessary.

■Servo amplifier with CN2L

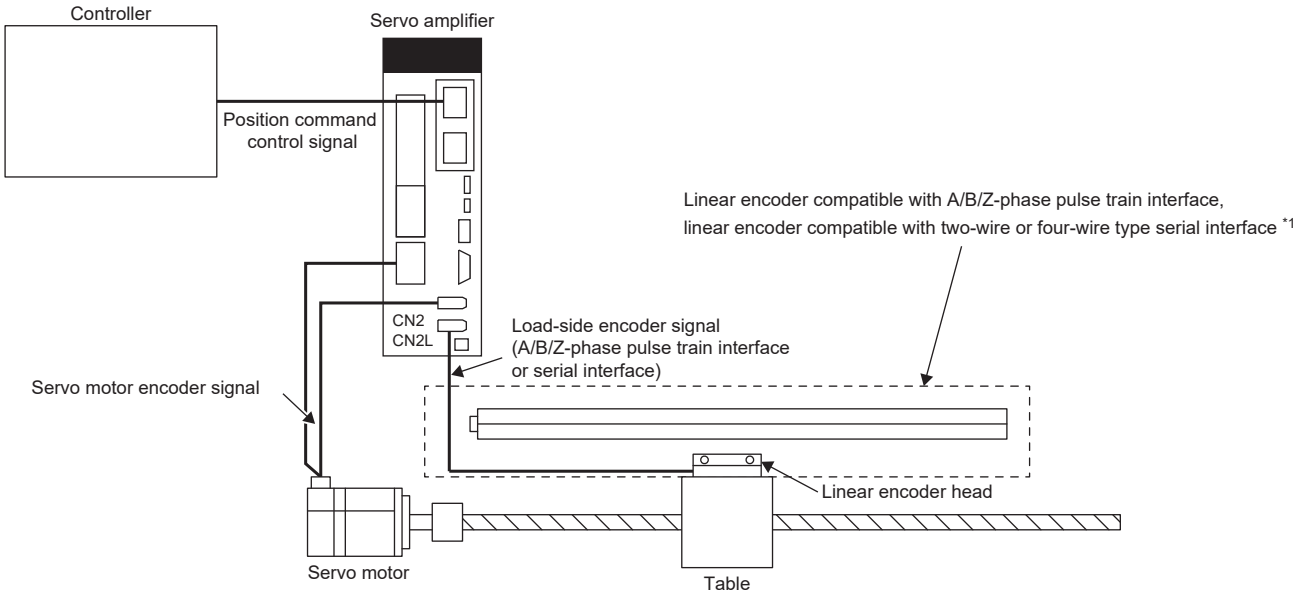

*1 When using an absolute position linear encoder, an absolute position detection system can be supported.
In that case, batteries are unnecessary.

For rotary encoders

■Servo amplifier without CN2L

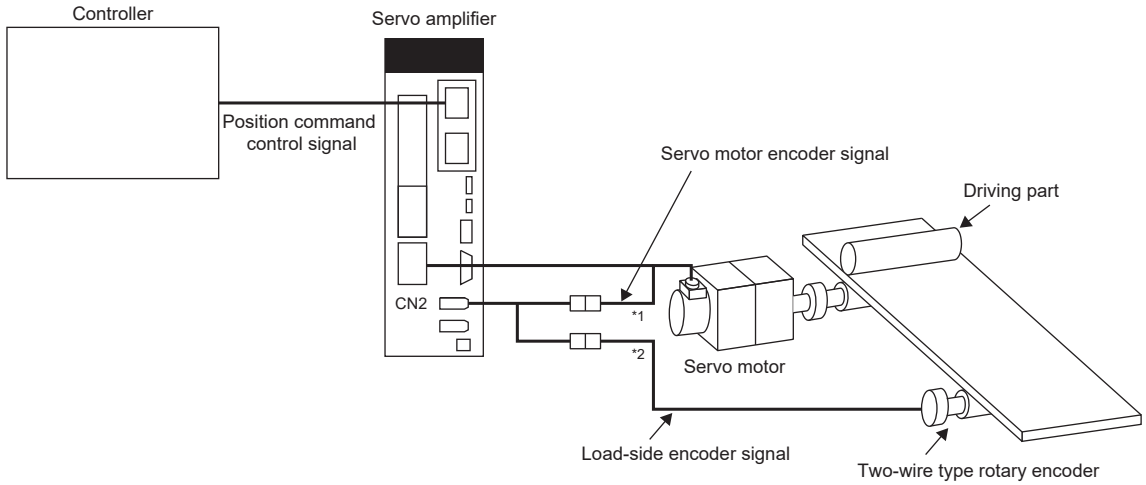

*1 Use a two-wire type encoder cable. A four-wire type encoder cable cannot be used.

*2 When an HK-KT servo motor or HK-MT servo motor is used, an absolute position detection system can be supported without using batteries.

■Servo amplifier with CN2L

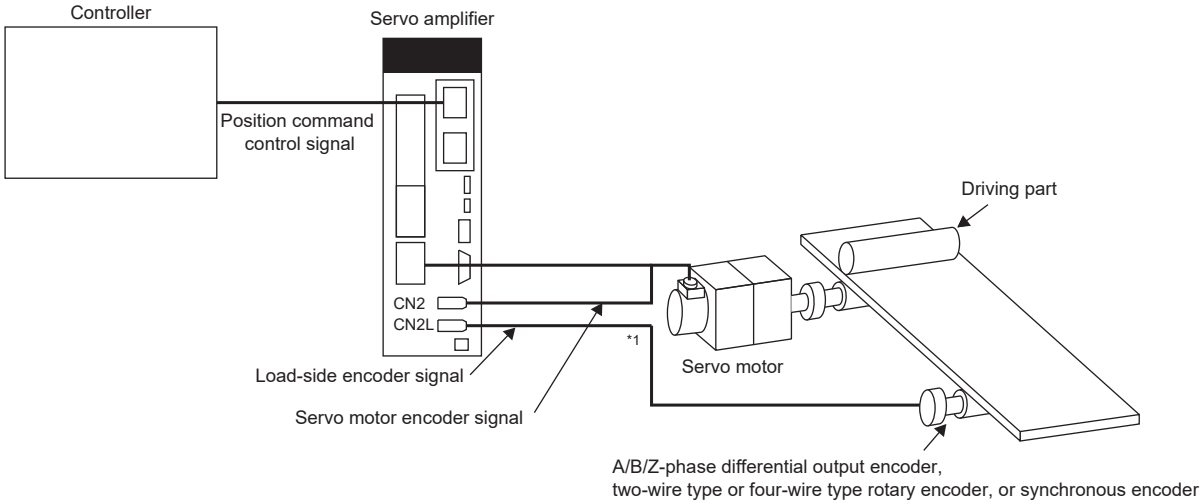

*1 When an HK-KT servo motor or HK-MT servo motor is used, an absolute position detection system can be supported without using batteries.

13.3 Signals and wiring

Point

- Use the load side encoder cables specified in this section. Using products other than those specified may cause a malfunction.
- Contact the manufacturer of the load-side encoder being used for information on specifications, performance, and guarantees.

Encoder cable configuration diagram

Configuration diagrams of the servo amplifier and load-side encoder are shown below. The cable to be used differs depending on the load-side encoder.

Encoder cable configuration diagram for linear encoders

Refer to the following manual for the linear encoder cables.

MR-J5 Partner's Encoder User's Manual

The encoder cable to be used differs depending on the load-side encoder.

■Servo amplifier without CN2L

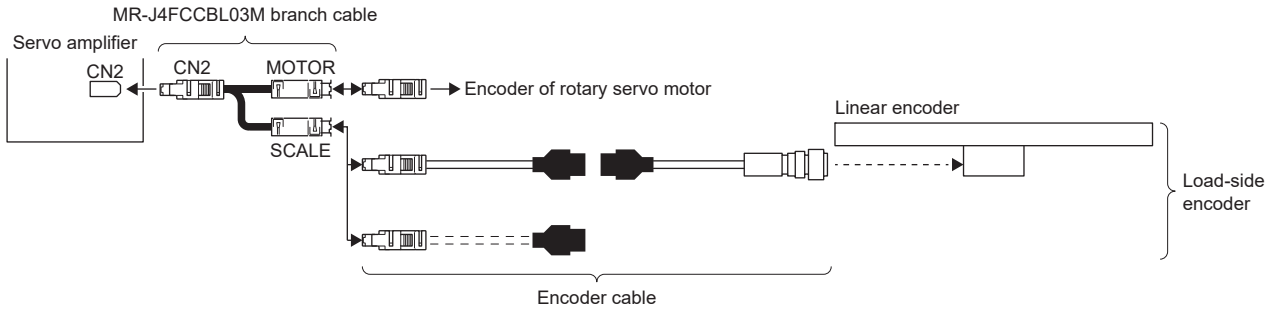

■Servo amplifier with CN2L

The linear encoder can be connected without using an MR-J4FCCBL03M branch cable. In addition, a four-wire type linear encoder can also be used.

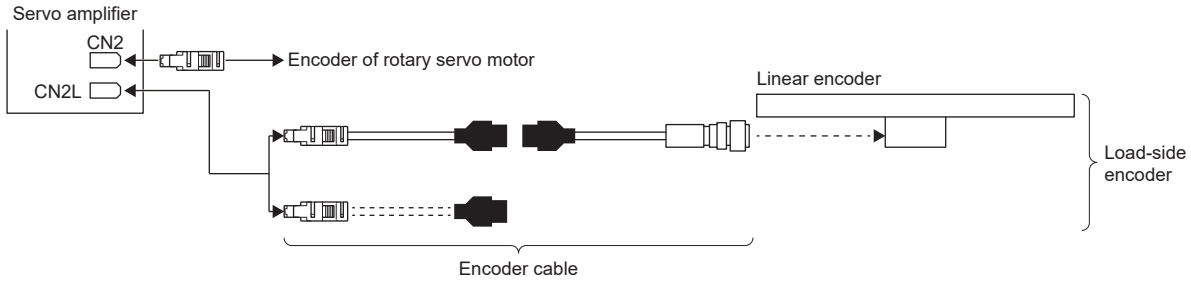

Encoder cable configuration diagram for rotary encoders

Point

- When using a rotary encoder as the load-side encoder, use an HK-KT servo motor or HK-MT servo motor as the encoder.
- Use a two-wire type encoder cable.
- When using an A/B/Z-phase differential output rotary encoder, refer to "A/B/Z-phase differential output type encoder" in the following manual.

📖MR-J5 Partner's Encoder User's Manual

For cables for rotary encoders, refer to "Motor cables/connector sets" and "Encoder cable" in the following manual.

📖Rotary Servo Motor User's Manual (For MR-J5)

Refer to the following for the MR-J4FCCBL03M branch cable.

☞ Page 615 MR-J4FCCBL03M branch cable

■Servo amplifier without CN2L

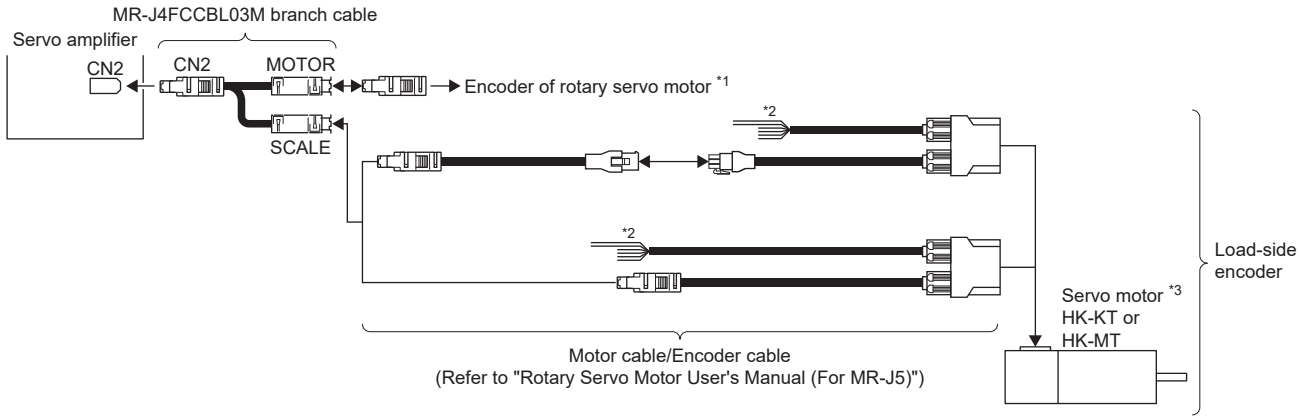

*1 Use a two-wire type encoder cable. A four-wire type encoder cable cannot be used.

*2 When the motor type of the servo motor is "HK-KT_W" or "HK-MT_W", a maximum of 240 V is output from the power cable, and when the motor type is "HK-KT_4_W", a maximum of 480 V is output. Insulation is therefore required. Apply insulation protection according to the maximum voltage to U, V, W, and each grounding wire. Do not disconnect the power cable during the insulation protection.

*3 Use the servo motor in the range not exceeding the maximum servo motor speed described in "Standard specifications list" in the following manual.
📖Rotary Servo Motor User's Manual (For MR-J5)

■Servo amplifier with CN2L

The rotary encoder can be connected without using an MR-J4FCCBL03M branch cable.

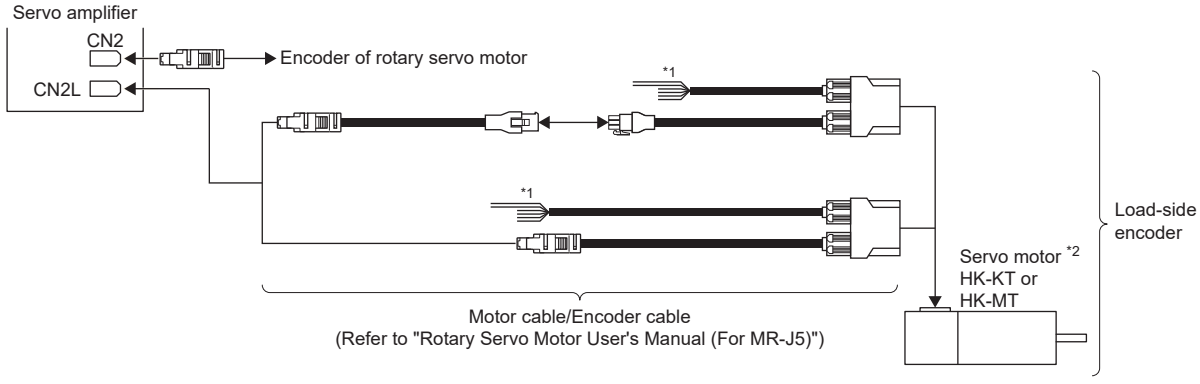

*1 When the motor type of the servo motor is "HK-KT_W" or "HK-MT_W", a maximum of 240 V is output from the power cable, and when the motor type is "HK-KT_4_W", a maximum of 480 V is output. Insulation is therefore required. Apply insulation protection according to the maximum voltage to U, V, W, and each grounding wire. Do not disconnect the power cable during the insulation protection.

*2 Use the servo motor in the range not exceeding the maximum servo motor speed described in "Standard specifications list" in the following manual.
📖Rotary Servo Motor User's Manual (For MR-J5)

13.4 Startup

Servo parameter setting

Selecting a fully closed loop system

With the settings of [Pr. PA01], [Pr. PE01], and the controller control command, a control method can be selected as described in the following table.

[Pr. PA01.4 Fully closed loop operation mode selection]	[Pr. PE01.0 Fully closed loop function selection]	Semi closed loop control/fully closed loop control switching signal	Command unit	Control method	Absolute position detection system
"0" Semi closed loop system	—	—	Servo motor encoder unit	Semi closed loop control	○
"1" Fully closed loop system	"0"	—	Load-side encoder unit	Dual feedback control (Fully closed loop control)	○ *1
	"1"	OFF		Semi closed loop control	×
		ON		Dual feedback control (Fully closed loop control)	×

*1 Can be supported when the load-side encoder is an absolute position encoder.

■Selecting an operation mode

Select an operation mode.

• [Pr. PA01.4 Fully closed loop operation mode selection]

Setting value	Operation mode	Control unit
0	Semi closed loop system	Servo motor-side resolution unit
1	Fully closed loop system	Load-side resolution unit

■Selecting semi closed/fully closed loop control [G] [A]

Select semi closed/fully closed loop control.

• [Pr. PE01.0 Fully closed loop function selection]

If this servo parameter is set to "1" while [Pr. PA03.0 Absolute position detection system selection] has been set to "1" (enabled (absolute position detection system)), [AL. 037 Parameter error] will occur.

0: Always enabled

1: Switching by "fully closed loop selection" from the controller (C_CLD) and by the input device "fully closed loop selection" (CLD)

Fully closed loop selection		Control method
Command from controller	CLD (fully closed loop selection) *1	
OFF	OFF	Semi closed loop control
ON	OFF	Fully closed loop control
OFF	ON	
ON	ON	

*1 This is always off if the CLD (fully closed loop selection) is not assigned to an input device.

This setting is enabled when "1" (enabled (fully closed loop control mode)) is selected in [Pr. PA01.4 Fully closed loop operation selection].

Depending on the device configuration, if [Pr. PE01.4 Fully closed loop control - Droop pulse clear selection] is set to "0" (enabled) and switching between semi closed loop control and fully closed loop control is performed to clear droop pulses, an error may occur in the stop position compared to when [Pr. PE01.4] is set to "1" (disabled). If [Pr. PE01.4] is set to "0" (enabled) and switching between semi closed loop control and fully closed loop control is performed, perform homing again.

■Selecting semi closed/fully closed loop control [B]

Select semi closed/fully closed loop control.

• [Pr. PE01.0 Fully closed loop function selection]

If this servo parameter is set to "1" while [Pr. PA03.0 Absolute position detection system selection] has been set to "1" (enabled (absolute position detection system)), [AL. 037 Parameter error] will occur.

0: Always enabled

1: Switching by fully closed loop selection command from the controller

Fully closed loop selection Command from controller	Control method
OFF	Semi closed loop control
ON	Fully closed loop control

This setting is enabled when "1" (enabled (fully closed loop control mode)) is selected in [Pr. PA01.4 Fully closed loop operation selection].

Depending on the device configuration, if [Pr. PE01.4 Fully closed loop control - Droop pulse clear selection] is set to "0" (enabled) and switching between semi closed loop control and fully closed loop control is performed to clear droop pulses, an error may occur in the stop position compared to when [Pr. PE01.4] is set to "1" (disabled). If [Pr. PE01.4] is set to "0" (enabled) and switching between semi closed loop control and fully closed loop control is performed, perform homing again.

Load-side encoder communication method selection [G] [B]

The communication method differs depending on the load-side encoder type.

For details on each load-side encoder communication method, refer to "External encoder connector" in the "User's Manual (Introduction)" and "Compatible encoder list" in the "MR-J5 Partner's Encoder User's Manual".

Select a cable to be connected to the CN2L connector with [Pr. PC26 Function selection C-8].

■[Pr. PC26.3 Load-side encoder cable communication method selection]

0: Two-wire type

1: Four-wire type

When using an A/B/Z-phase differential input interface, set "0".

The incorrect setting triggers [AL. 070] or [AL. 071].

Setting "1" on servo amplifiers other than the MR-J5-_G_-RJ_, MR-J5-_G_-HS_, or MR-J5-_B_-RJ triggers [AL. 037 Parameter error].

■[Pr. PC27.2 ABZ phase input interface encoder ABZ phase connection assessment function selection]

Setting value	Detection of disconnection	Alarm status
	Z-phase-side non-signal	Fully closed loop control mode
0	Enabled	[AL. 071.6] (Z-phase)
1	Disabled	—

This servo parameter is enabled only when an A/B/Z-phase input interface encoder is used.

Load-side encoder communication method selection [A]

The communication method differs depending on the load-side encoder type.

For details on each load-side encoder communication method, refer to "External encoder connector" in the "User's Manual (Introduction)" and "Compatible encoder list" in the "MR-J5 Partner's Encoder User's Manual".

Select a cable to be connected to the CN2L connector with [Pr. PC44 Function selection C-9].

■[Pr. PC44.3 Load-side encoder cable communication method selection]

0: Two-wire type

1: Four-wire type

When using an A/B/Z-phase differential input interface, set "0".

The incorrect setting triggers [AL. 070] or [AL. 071].

Setting "1" on servo amplifiers other than the MR-J5-_A_-RJ triggers [AL. 037 Parameter error].

■[Pr. PC45.2 ABZ phase input interface encoder ABZ phase connection assessment function selection]

Setting value	Detection of disconnection	Alarm status
	Z-phase-side non-signal	Fully closed loop control mode
0	Enabled	[AL. 071.6 Load-side encoder normal communication - Transmission data error 2] (Z-phase)
1	Disabled	—

This servo parameter is enabled only when an A/B/Z-phase input interface encoder is used.

Setting the polarity of the load-side encoder [G] [B]

Precautions

• Do not set the incorrect direction in [Pr. PC27.0 Encoder pulse count polarity selection].

If the correct direction is not set, the encoder will not operate correctly, possibly causing a collision that results in an accident or damage to other devices.

• [Pr. PC27.0 Encoder pulse count polarity selection] is not related to [Pr. PA14 Travel direction selection].

Set this parameter according to the relationship between the servo motor and the linear encoder/rotary encoder.

• Do not set the incorrect direction in [Pr. PC27.0 Encoder pulse count polarity selection].

During the positioning operation, [AL. 042 Fully closed loop control error] may occur.

■Servo parameter

Set the polarity of the load-side encoder that is connected to the CN2L connector so that the CCW direction of the servo motor matches the increasing direction of the load-side encoder feedback.

• [Pr. PC27.0 Encoder pulse count polarity selection]

0: Load-side encoder pulse increasing direction in the servo motor CCW

1: Load-side encoder pulse decreasing direction in the servo motor CCW

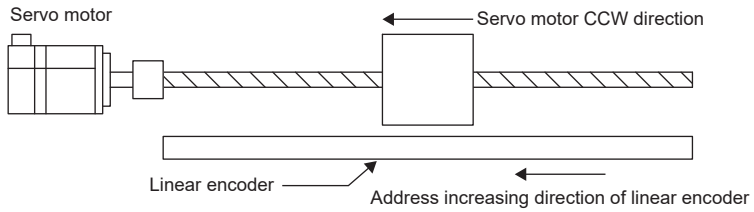

■Checking the feedback direction of the load-side encoder

Refer to the following for checking the feedback direction of the load-side encoder.

☞ Page 603 Checking position data of the load-side encoder

Setting the polarity of the load-side encoder [A]

Precautions

• Do not set the incorrect direction in [Pr. PC45.0 Encoder pulse count polarity selection].
If the correct direction is not set, the encoder will not operate correctly, possibly causing a collision that results in an accident or damage to other devices.
• [Pr. PC45.0 Encoder pulse count polarity selection] is not related to [Pr. PA14 Travel direction selection].
Set this parameter according to the relationship between the servo motor and the linear encoder/rotary encoder.
• Do not set the incorrect direction in [Pr. PC45.0 Encoder pulse count polarity selection].
During the positioning operation, [AL. 042 Fully closed loop control error] may occur.

■Servo parameter

Set the polarity of the load-side encoder that is connected to the CN2L connector so that the CCW direction of the servo motor matches the increasing direction of the load-side encoder feedback.
• [Pr. PC45.0 Encoder pulse count polarity selection]
0: Load-side encoder pulse increasing direction in the servo motor CCW
1: Load-side encoder pulse decreasing direction in the servo motor CCW

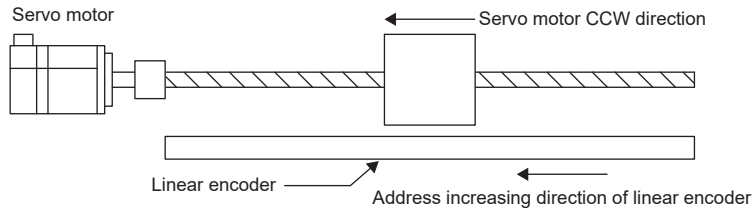

■Checking the feedback direction of the load-side encoder

Refer to the following for checking the feedback direction of the load-side encoder.
☞ Page 603 Checking position data of the load-side encoder

Setting the feedback pulse electronic gear

Precautions

If an incorrect value is set for the feedback pulse electronic gear ([Pr. PE04 Fully closed loop control - Feedback pulse electronic gear 1 - Numerator] or [Pr. PE05 Fully closed loop control - Feedback pulse electronic gear 1 - Denominator]), [AL. 037 Parameter error] may occur and prevent normal operation.
In addition, [AL. 042.8 Fully closed loop control error based on position deviation] may occur during the positioning operation.
For servo motor-side encoder pulses, set the numerator [Pr. PE04] and denominator [Pr. PE05] of the electronic gear.
Set the electronic gear so that the number of servo motor encoder pulses per servo motor revolution is converted into the number of load-side encoder pulses. The relation is as follows.

$$\frac{\text{[Pr. PE04]}}{\text{[Pr. PE05]}} = \frac{\text{The number of load-side encoder pulses per servo motor revolution}}{\text{The number of servo motor encoder pulses per servo motor revolution}}$$

Select a load-side encoder of which the number of load-side encoder pulses per servo motor revolution is within the following range.
4096 (2^{12}) ≤ Number of load-side encoder pulses per servo motor revolution ≤ 67108864 (2^{26})

■Example settings of a ball screw (direct connection) with a linear encoder resolution of 0.05 μm

- Conditions

Servo motor resolution: 67108864 pulses/rev
Servo motor reduction ratio: 1/11
Ball screw lead: 20 mm
Linear encoder resolution: 0.05 μm

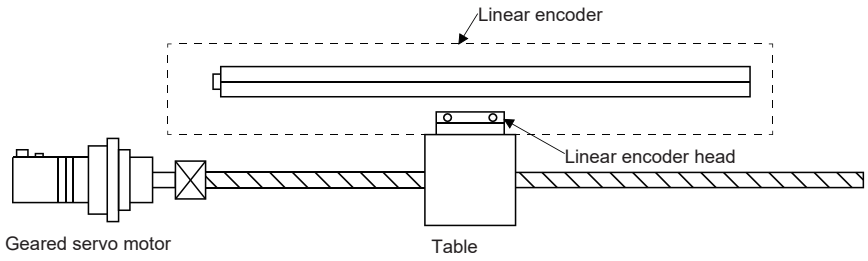

Calculate the number of linear encoder pulses per ball screw revolution.
Number of linear encoder pulses per ball screw revolution
= Ball screw lead/Linear encoder resolution
= 20 mm/0.05 μm = 400000 pulses

$$\frac{\text{[Pr. PE04]}}{\text{[Pr. PE05]}} = \frac{400000}{67108864} \times \frac{1}{11} = \frac{3125}{524288} \times \frac{1}{11} = \frac{3125}{5767168}$$

■Example settings when using a rotary encoder as the load-side encoder of a roll feeder

• Conditions

Servo motor resolution: 67108864 pulses/rev

Servo motor-side pulley diameter: 30 mm

Rotary encoder side pulley diameter: 20 mm

Rotary encoder resolution: 67108864 pulses/rev

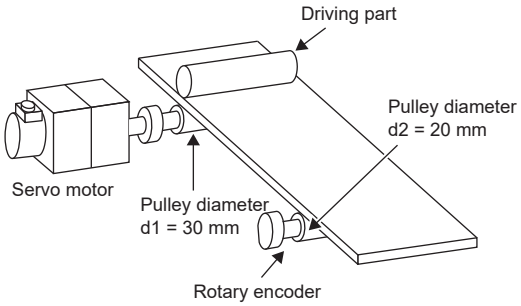

If the pulley ratio or reduction ratio is not one-to-one, calculate the electronic gear by taking that into consideration.

$$\frac{\text{[Pr. PE04]}}{\text{[Pr. PE05]}} = \frac{67108864 \times 30}{67108864 \times 20} = \frac{1}{1} \times \frac{3}{2} = \frac{3}{2}$$

• Restrictions [B]

The numerator and denominator must be less than or equal to 2147483647 by reducing a fraction in the following equation. If either of them exceeds 2147483647, [AL. 037 Parameter error] occurs.

$$\frac{\text{[Pr. PE04]} \times \text{Servo motor resolution}}{\text{[Pr. PE05]} \times \text{Rotary encoder resolution}}$$

There are no restrictions when an A/B/Z-phase differential output rotary encoder is used as the load-side encoder and [Pr. PE51 Load-side encoder resolution setting] is set to "0".

Setting the fully closed loop dual feedback filter

Use auto tuning or a similar mode to adjust the gain in the same way as when using semi closed loop control while [Pr. PE08 Fully closed loop dual feedback filter] is being set to the initial value (setting value = 10).

Adjust the dual feedback filter while observing the servo operation waveforms with the graph function or a similar function of MR Configurator2.

The operation status of the dual feedback filter varies depending on the setting value as shown below.

Setting value of [Pr. PE08]	Control mode	Vibration	Settling time
1 to 4499	Dual feedback	Hardly occurs to Easily occurs	Longer to shorter
4500	Fully closed	—	—

When the setting value for the dual feedback filter is increased, the settling time becomes shorter. However, the vibration of the servo motor will be larger because the servo motor becomes susceptible to the vibrations of the load-side encoder.

For the dual feedback filter, set a value that is equal to or smaller than a half of the setting value for PG2.

- To shorten the settling time: Increase the value for the dual feedback filter.

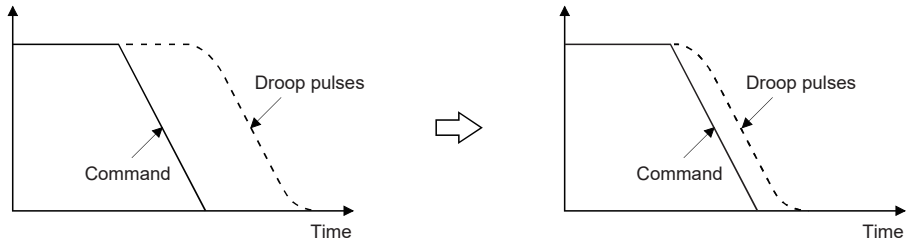

- To suppress vibration: Decrease the value for the dual feedback filter.

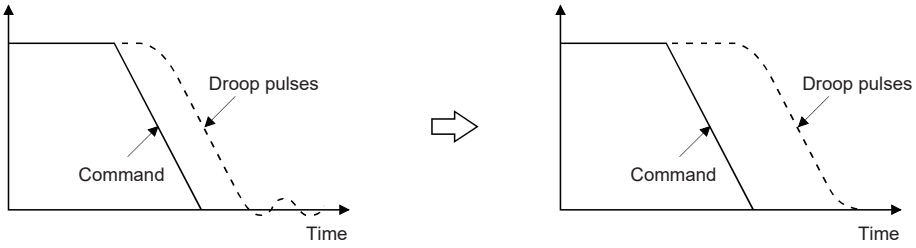

Load-side encoder resolution setting

When using an A/B/Z-phase differential output rotary encoder, set the resolution in [Pr. PE51 Load-side encoder resolution setting].

When using an A/B/Z-phase differential output linear encoder, set [Pr. PE51] to "0".

- [Pr. PE51 Load-side encoder resolution setting]

Set the resolution of the A/B/Z-phase differential output rotary encoder used on the load-side.

When an A/B/Z-phase differential output type encoder is connected, the value set to this servo parameter is used to determine whether it is a rotary encoder or a linear encoder.

0: Linear encoder

Other than 0: Rotary encoder

Checking position data of the load-side encoder

Precautions

Depending on the check items, MR Configurator2 may be used. Refer to "Help" of MR Configurator2 for the data displayed on the MR Configurator2.

Check the load-side encoder mounting and parameter settings for any problems.

No.	Check item	Confirmation method and description
1	Reading the position data of the load-side encoder	When a load-side encoder that is installed and connected correctly is operated, the value for load side encoder cumulative feedback pulses is counted correctly. If the value is not counted correctly, the following are likely causes. (1) An alarm occurred. (2) The load-side encoder is not installed correctly. (3) The encoder cable is not wired correctly.
2	Reading the home position of the load-side encoder (reference mark, Z-phase)	If the home position (reference mark, or Z-phase) of the load-side encoder is in a normal condition (mounting, connection, etc.), the value of load-side encoder information 1 is cleared to 0 when the load-side encoder is moved to pass through the home position (reference mark, or Z-phase). If the value is not cleared, the following are likely causes. (1) The load-side encoder is not installed correctly. (2) The encoder cable is not wired correctly.
3	Checking the load-side encoder feedback direction (setting the polarity of the load-side encoder)	Move the device (load-side encoder) manually in servo-off status to confirm that the directions of the cumulative feedback pulses of the servo motor encoder (after taking the gear into consideration) and the load-side cumulative feedback pulses are matched. If the directions are mismatched, reverse the polarity.
4	Setting the electronic gear for the load-side encoder	When the servo motor and the load-side encoder move synchronously, the servo motor-side cumulative feedback pulses (after taking the gear into consideration) and load side encoder cumulative feedback pulses increase by the same amount. If the cumulative feedback pulses are mismatched, use the following procedure to review the settings of the fully closed loop control feedback electronic gear ([Pr. PE04 Fully closed loop control - Feedback pulse electronic gear 1 - Numerator] and [Pr. PE05 Fully closed loop control - Feedback pulse electronic gear 1 - Denominator]). (1) Check the servo motor-side cumulative feedback pulses (before taking the gear into consideration). (2) Check the load-side cumulative feedback pulses. (3) Check that the ratio of (1) to (2) mentioned above is the same as the feedback electronic gear ratio. 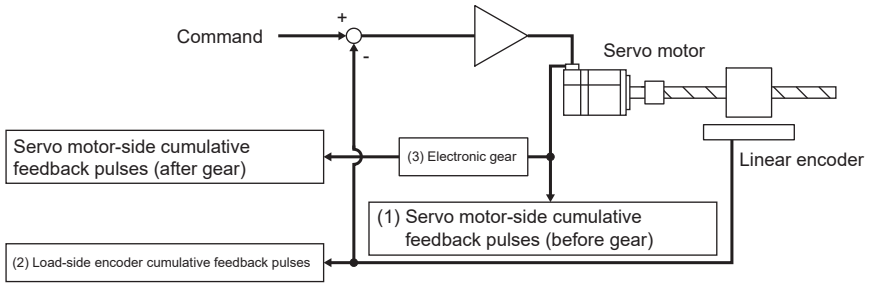

13.5 Basic functions

Homing [G] [A]

Homing is performed based on the load-side encoder feedback data regardless of the load-side encoder type.
It is irrelevant to the Z-phase position of the servo motor encoder.
The types and methods of homing are basically the same as in semi closed loop control.

Restriction

- In the case of homing with a dog signal, the home position (reference mark) must be passed through when an incremental type linear encoder is used, or the Z-phase must be passed through when a rotary encoder is used, during a period from a home position return start until the dog signal turns off.
- For the linear encoder, a home position (reference mark) of the linear encoder is necessary in the homing direction. In addition, place the proximity dog position one half of the rotation or more before the reference mark.

Precautions

To execute homing securely in the following example, start homing after moving the servo motor to LSN with the JOG operation.

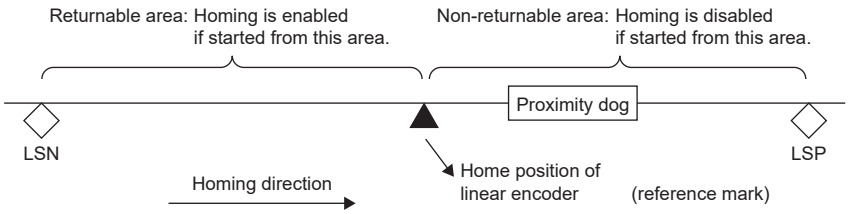

Reference home position

■Absolute position linear encoder

The reference home position for an absolute position linear encoder is every position per servo motor revolution starting from the linear encoder home position (absolute position data = 0).

In the case of Method -1 (dog type homing), the nearest position after the proximity dog signal turned off is the home position.

The linear encoder home position can be set in any position.

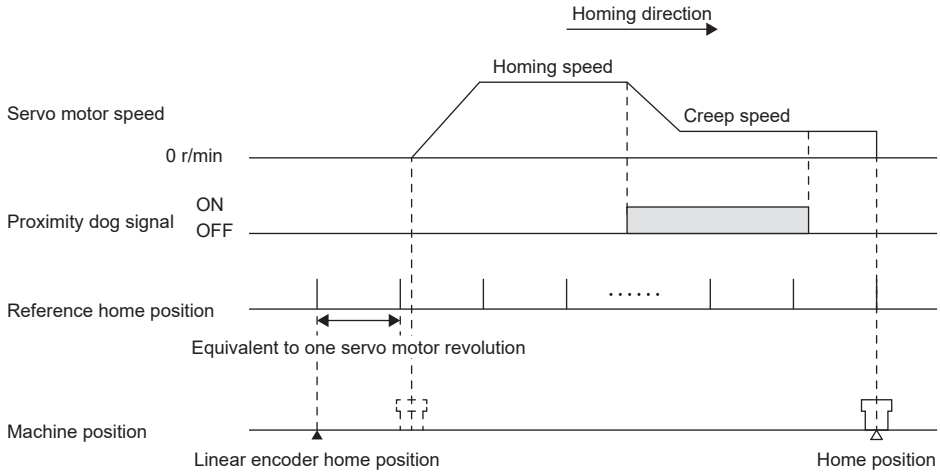

■Incremental linear encoder

Precautions

- To execute homing securely, start homing after moving the servo motor to the opposite stroke end with the JOG operation from the controller or other methods.
- If the linear encoder home position (reference mark) does not exist on the incremental linear encoder, only the homing methods that do not use the Z-phase can be executed.
- Do not set multiple homing positions (reference marks).
- An interval for turning on home position (reference mark) signal of the linear encoder has a certain width.

(Specifications differ depending on the linear encoder.)

Example: When the Z-phase is recognized at startup

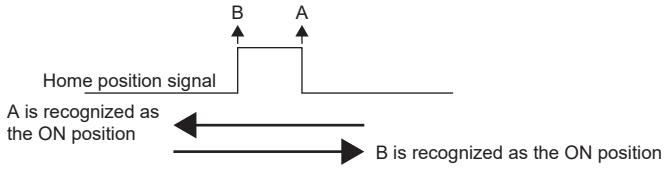

The position where the signal turns on depends on the direction in which the home position is passed through. In a case where homing is always required to be completed at the same position (such as dog type homing), start homing with the same direction.

The reference home position for an incremental linear encoder is every position per servo motor revolution starting from the first linear encoder home position which has been passed through after the power-on. (reference mark).

In the case of Method -1 (dog type homing), the nearest reference home position after the proximity dog signal rear end is detected is the home position.

• When the linear encoder home position (reference mark) exists in the homing direction

The position obtained by moving the home position shift distance from the linear encoder home position (reference mark) is set as the home position.

The following figure shows the operation of Homing method 34. The homing direction of Homing method 33 is opposite to that of Homing method 34.

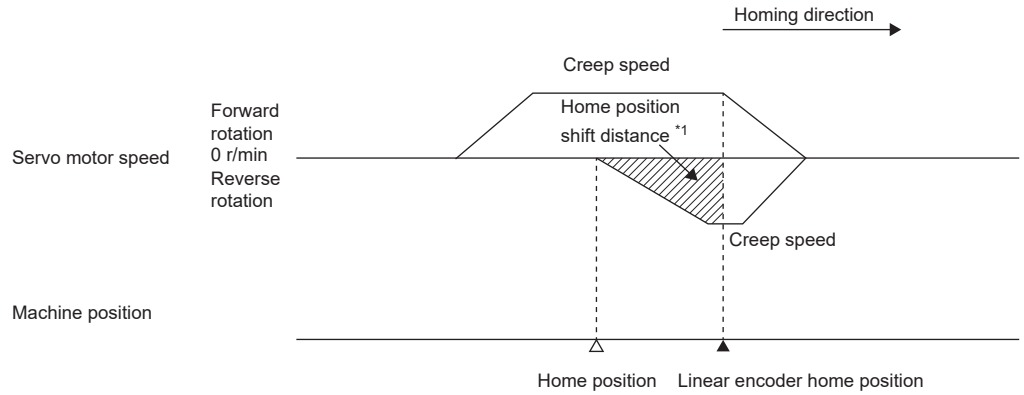

*1 Home position shift distance can be changed with [Pr. PT07 Home position shift distance].

When the stroke end is detected

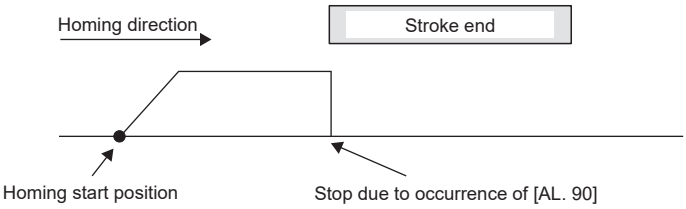

The following figure shows the operation of Homing method -11. The homing direction of Homing method -43 is opposite to that of Homing method -11.

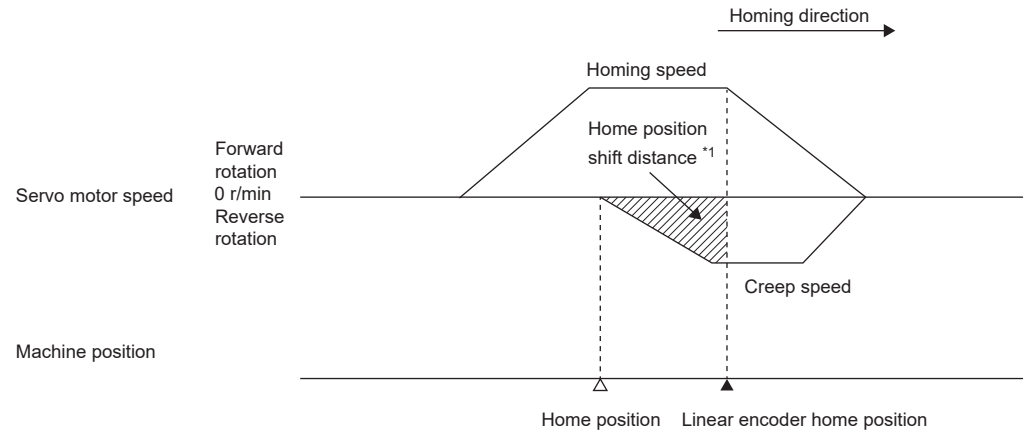

*1 Home position shift distance can be changed with [Pr. PT07].

When the servo motor returns at the stroke end

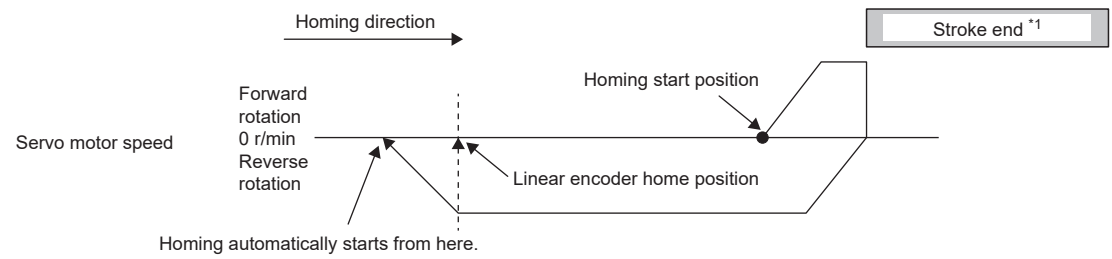

*1 This cannot be used with the software limit.

• When the linear encoder home position does not exist in the homing direction

If homing is performed from a position where the linear encoder home position does not exist in the homing direction, an error may occur depending on the homing method.

If an error occurs, change the homing method or temporarily move the servo motor to the stroke end opposite of homing with the JOG operation or other methods from the controller, then perform homing.

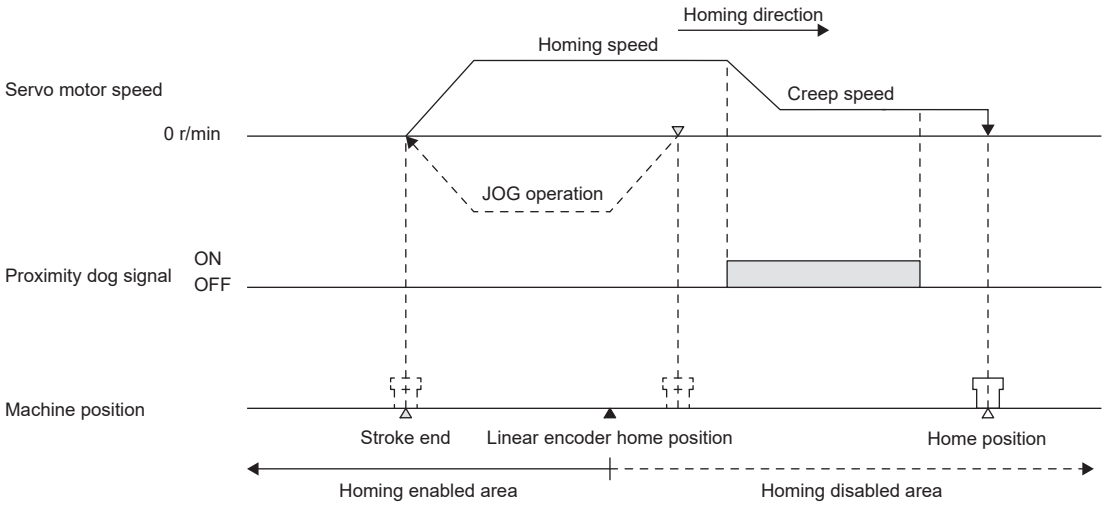

■Rotary encoder of a serial communication servo motor

If using the rotary encoder of a serial communication servo motor as the load-side encoder, the home position is at the load side Z-phase position.

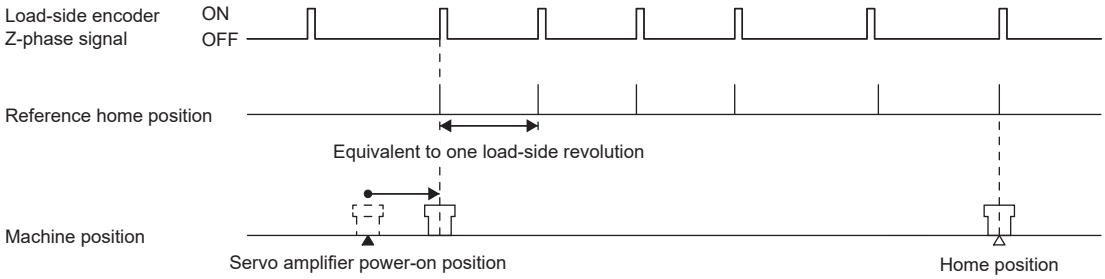

Homing [B]

Homing is performed based on the load-side encoder feedback data regardless of the load-side encoder type.
It is irrelevant to the Z-phase position of the servo motor encoder.
The types and methods of homing are basically the same as in semi closed loop control.

Restriction

- In the case of homing with a dog signal, the home position (reference mark) must be passed through when an incremental type linear encoder is used, or the Z-phase must be passed through when a rotary encoder is used, during a period from a home position return start until the dog signal turns off.
- For the linear encoder, a home position (reference mark) of the linear encoder is necessary in the homing direction. In addition, place the proximity dog position one half of the rotation or more before the reference mark.

Precautions

To execute homing securely in the following example, start homing after moving the linear servo motor to RLS with the JOG operation.

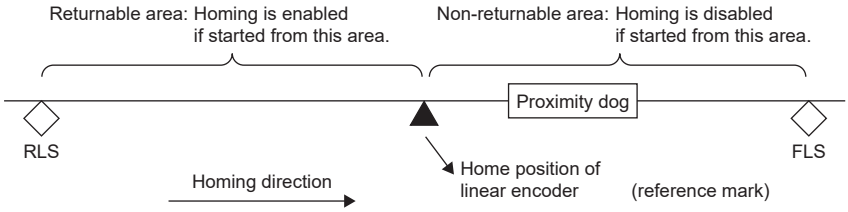

Reference home position

■Absolute position linear encoder

The reference home position for an absolute position linear encoder is every position per servo motor revolution starting from the linear encoder home position (absolute position data = 0).

For proximity dog type homing, the nearest reference home position after the proximity dog signal turned off is the home position.

The linear encoder home position can be set in any position.

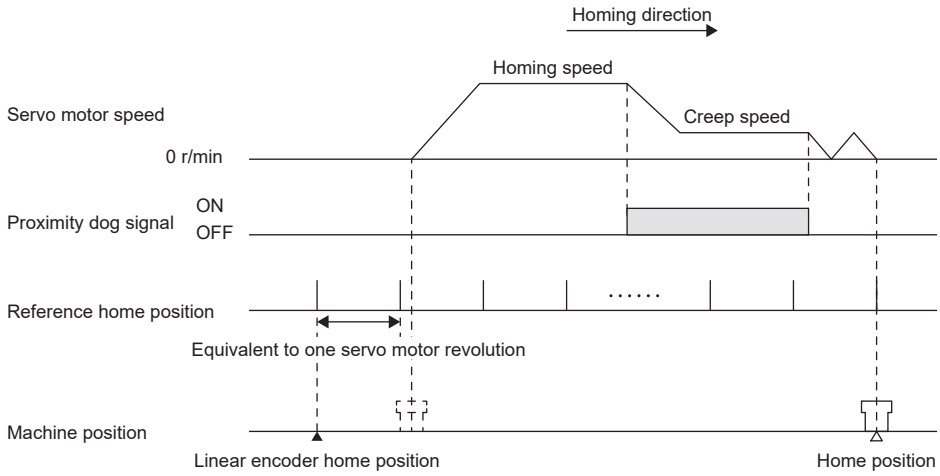

■Incremental linear encoder

• When the linear encoder home position (reference mark) exists in the homing direction

The home position for an incremental linear encoder is every position per servo motor revolution starting from the linear encoder home position which has been passed through after the homing start (reference mark).

For proximity dog type homing, the nearest position after the proximity dog signal turned off is the home position.

Set one linear encoder home position in the full stroke, and set it in the position to be passed after the homing start. LZ (Encoder Z-phase pulse) cannot be used.

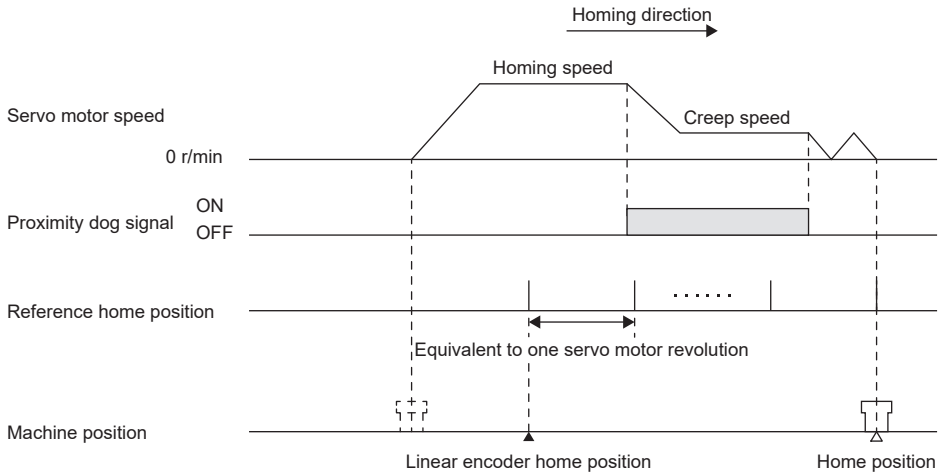

• When the linear encoder home position does not exist in the homing direction

If homing is performed from a position where the linear encoder home position does not exist in the homing direction, an error may occur depending on the homing method. Error details differ depending on the controller being used.

If an error occurs, change the homing method or move the linear servo motor to the stroke limit on the opposite side of the homing direction with operations such as the JOG operation from the controller, then start homing.

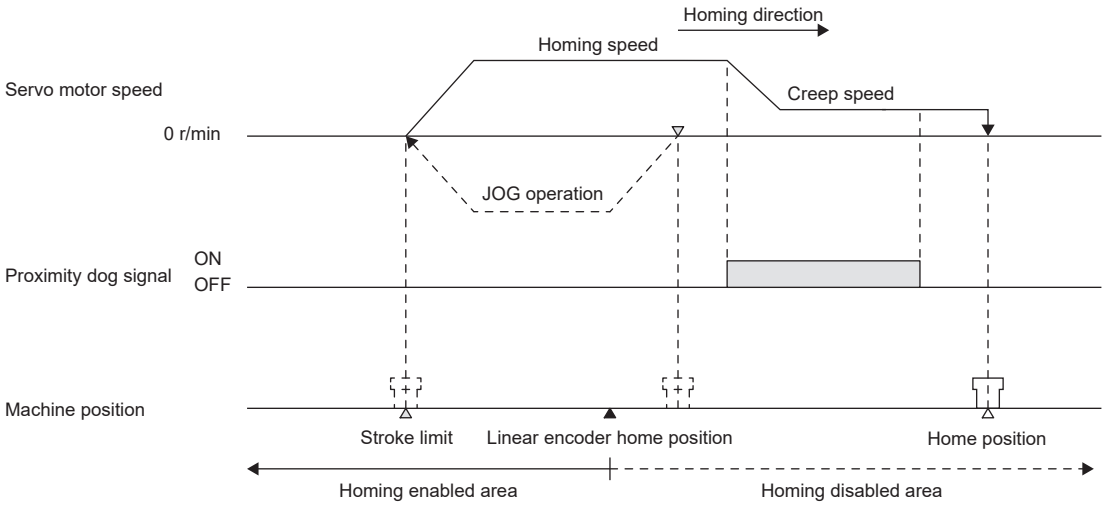

■Rotary encoder of a serial communication servo motor

If using the rotary encoder of a serial communication servo motor as the load-side encoder, the home position is at the load side Z-phase position.

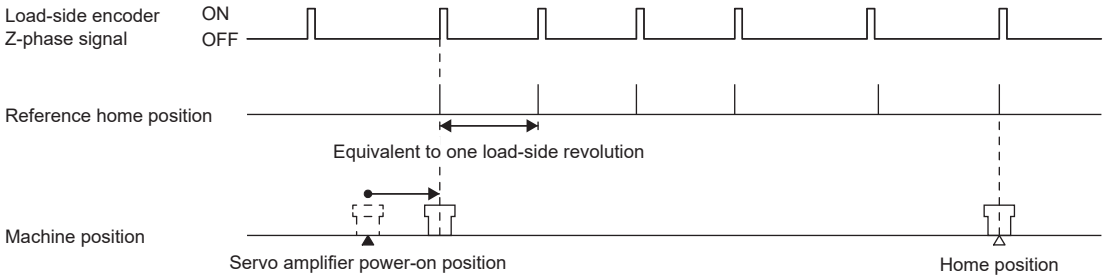

■Data set type homing (Common to load-side encoders)

Perform data set type homing after the home position (reference mark) and Z-phase signal of the rotary encoder are passed through.

For a machine that does not have enough distance for the servo motor encoder to rotate once before the Z-phase of the rotary encoder is passed through, changing the setting of [Pr. PC17.0 Homing condition selection] enables homing even without the home position passed through.

Operation from controller

The positioning operation from the controller is basically the same as in semi closed loop control.

Fully closed loop control error detection function

If fully closed loop control becomes unstable for some reason, the servo motor-side speed may increase abnormally.
To detect this state and to stop operation, the fully closed loop control error detection function is used as a protective function.
The fully closed loop control error detection function has two types of detection methods: speed deviation and position deviation. Errors are detected only when each method is enabled with [Pr. PE03.0 Fully closed loop control error - Detection function selection].
In addition, the detection level settings can be changed with [Pr. PE06 Fully closed loop control - Speed deviation error detection level] and [Pr. PE07 Fully closed loop control - Position deviation error detection level].

Fully closed loop control error - Detection function selection

Select the fully closed loop control error detection function.

Servo parameter	Description
PE03.0	Fully closed loop control error - Detection function selection 0: Disabled 1: Speed deviation error detection 2: Position deviation error detection 3: Speed deviation error, position deviation error detection (initial value)

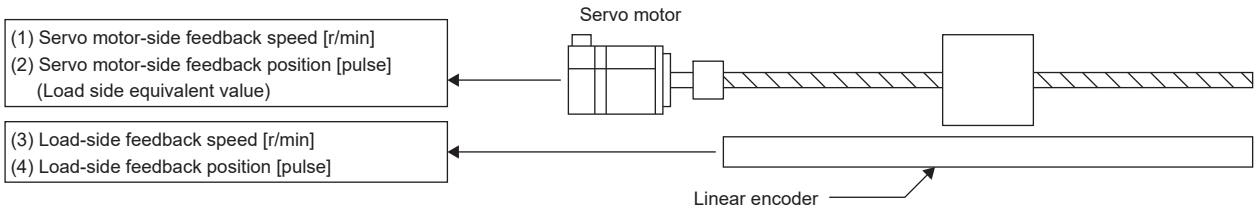

■Speed deviation error detection

Set [Pr. PE03.0 Fully closed loop control error - Detection function selection] to "1" (speed deviation error detection) to enable the speed deviation error detection.

Servo parameter	Description
PE03.0	Fully closed loop control error - Detection function selection 1: Speed deviation error detection

When the difference between the servo motor-side feedback speed (1) and the load-side feedback speed (3) is equal to or more than the value of [Pr. PE06 Fully closed loop control - Speed deviation error detection level] (1 r/min to permissible speed), [AL. 042.9 Servo control error based on speed deviation] occurs, and the servo motor stops.
The initial value for [Pr. PE06] is 400 r/min. Change the setting value as necessary.

■Position deviation error detection

Set [Pr. PE03.0 Fully closed loop control error - Detection function selection] to "2" (position deviation error detection) to enable the position deviation error detection.

Servo parameter	Description
PE03.0	Fully closed loop control error - Detection function selection 2: Position deviation error detection
PE03.1	Position deviation error - Detection method selection 0: Continuous detection 1: Detection only at stop (An error is detected if the command is "0".) 2: Detection only at stop 2 (An error is detected while in servo-off state or if the command is "0" while in servo-on state.)

Servo parameter	Description
PE10.1	Fully closed loop control - Position deviation error detection level - Unit selection 0: 1 [kpulse] unit 1: 1 [pulse] unit

When the difference between the servo motor-side feedback position (2) and the load-side feedback position (4) is equal to or more than the value of [Pr. PE07 Fully closed loop control - Position deviation error detection level] (1 kpulse to 20000 kpulses), [AL. 042.8 Servo control error based on position deviation] occurs, and the servo motor stops.
If the difference is equal to or more than the value of [Pr. PE07] at the command stop, [AL. 042.A Fully closed loop control error based on position deviation during command stop] occurs.
When [Pr. PE03.1 Position deviation error - Detection method selection] is set to "1" (Detection only at stop), only [AL. 042.A] is detected.
The initial value for [Pr. PE07] is 100 kpulses.
The setting unit for [Pr. PE07] can be changed with [Pr. PE10.1 Fully closed loop control - Position deviation error detection level - Unit selection].
Change the setting value as necessary.

■Detecting multiple deviation errors

Multiple deviation errors can be detected when [Pr. PE03.0 Fully closed loop control error - Detection function selection] is set to "3" (speed deviation error detection and position deviation error detection).
Refer to the following for the error detection method.
☞ Page 611 Speed deviation error detection
☞ Page 612 Position deviation error detection

Fully closed loop control error - Reset selection

Select the reset condition of fully closed loop control errors.

■[Pr. PE03.3 Fully closed loop control error - Reset selection]

0: Reset disabled (reset by cycling the power or software reset)
1: Reset enabled

Motor-side/load-side deviation counter clear [A]

The motor-side/load-side position deviation counter, which is used for detecting [AL. 042.A Fully closed loop control error based on position deviation during command stop], can be cleared to "0" if the input device "MECR" is turned on.
The droop pulses in position control are not affected.

About MR Configurator2

With MR Configurator2, the servo parameters can be checked if set correctly, and the servo motor and the load-side encoder can be checked if operated properly.

This section explains the Fully Closed Loop Diagnosis screen.

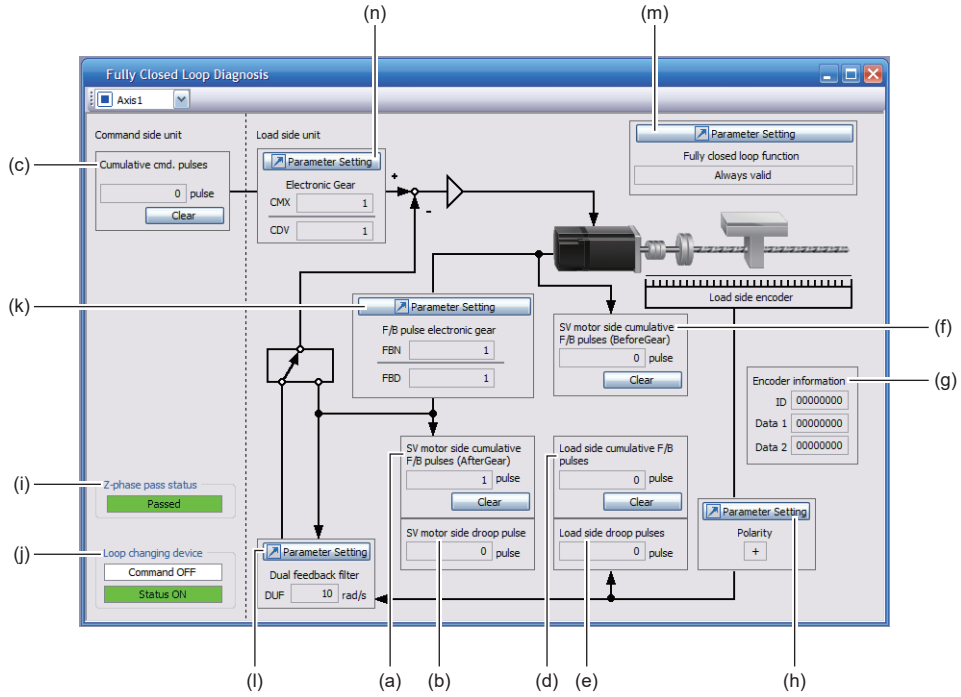

Symbol	Name	Explanation	Unit
(a)	Servo motor-side cumulative feedback pulses (after gear)	The feedback pulses from the servo motor encoder are counted and displayed. (load-side encoder unit) When the setting value exceeds 999999999, it starts from 0. Click "Clear" to reset the value to "0". In reverse rotation, the value is negative.	pulse
(b)	Servo motor-side droop pulses	Droop pulses of the deviation counter between a servo motor-side position and a command are displayed. In reverse rotation, the value is negative.	pulse
(c)	Cumulative command pulses	Position command input pulses are counted and displayed. Click "Clear" to reset the value to "0". Under reverse command, the value is negative.	pulse
(d)	Load-side encoder cumulative feedback pulses	The feedback pulses from the load-side encoder are counted and displayed. When the setting value exceeds 999999999, it starts from 0. Click "Clear" to reset the value to "0". In reverse rotation, the value is negative.	pulse
(e)	Load-side encoder droop pulses	Droop pulses of the deviation counter between a load-side position and a command are displayed. In reverse rotation, the value is negative.	pulse
(f)	Servo motor-side cumulative feedback pulses (before gear)	The feedback pulses from the servo motor encoder are counted and displayed. (Servo motor encoder unit) When the setting value exceeds 999999999, it starts from 0. Click "Clear" to reset the value to "0". In reverse rotation, the value is negative.	pulse
(g)	Encoder information	The load-side encoder information is displayed. The display contents differ depending on the load-side encoder type. • ID: The ID No. of the load-side encoder is displayed. • Data 1: For an incremental type linear encoder, the counter from powering on is displayed. For an absolute position type linear encoder, absolute position data is displayed. • Data 2: For the incremental type linear encoder, the distance (number of pulses) from the reference mark (Z-phase) is displayed. For the absolute position type linear encoder, "00000000" is displayed.	—
(h)	Parameter Setting (Polarity)	"+" is displayed for the address increasing direction in the servo motor CCW direction, and "-" is displayed for the address decreasing direction in the servo motor CCW direction.	—

Symbol	Name	Explanation	Unit
(i)	Z-phase pass status	When the fully closed loop system is disabled, the Z-phase pass status of the servo motor encoder is displayed. When the fully closed loop system is enabled or when switching between semi closed loop control and fully closed loop control is enabled, Z-phase pass status of the load-side encoder is displayed.	—
(j)	Fully closed loop changing device	This item is displayed only when switching between semi closed loop control and fully closed loop control is enabled. The state of the semi closed loop control/fully closed loop control switching signal and the internal state when switching between semi closed loop control and fully closed loop control is enabled.	—
(k)	Parameter Setting (F/B pulse electronic gear)	With this servo parameter, the feedback pulse electronic gears ([Pr. PE04 Fully closed loop control - Feedback pulse electronic gear 1 - Numerator] and [Pr. PE05 Fully closed loop control - Feedback pulse electronic gear 1 - Denominator]) for servo motor encoder pulses can be displayed and set. ☞ Page 600 Setting the feedback pulse electronic gear	—
(l)	Parameter Setting (Dual F/B filter)	With this servo parameter, the band for [Pr. PE08 Fully closed loop dual feedback filter] can be displayed and set.	—
(m)	Parameter Setting (Fully closed loop function) [G] [B]	The servo parameters for the fully closed loop control can be displayed and set. Click "Parameter Setting" to display the "Parameter Setting (Function display (List))" window. 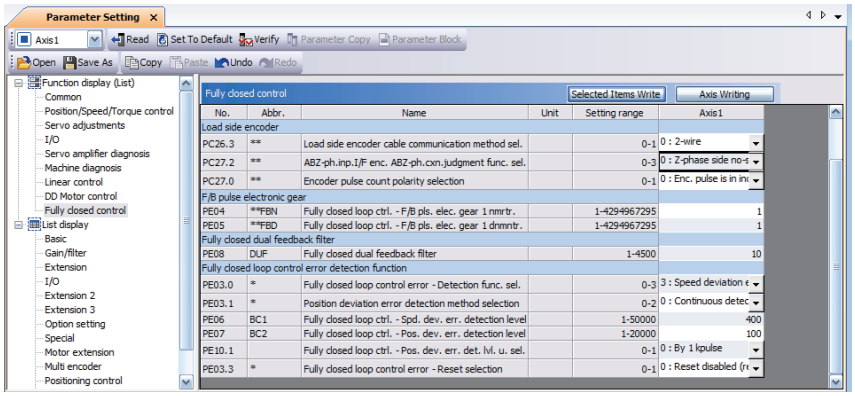	—
	Parameter Setting (Fully closed loop function) [A]	The servo parameters for the fully closed loop control can be displayed and set. Click "Parameter Setting" to display the "Parameter Setting (Function display (List))" window. 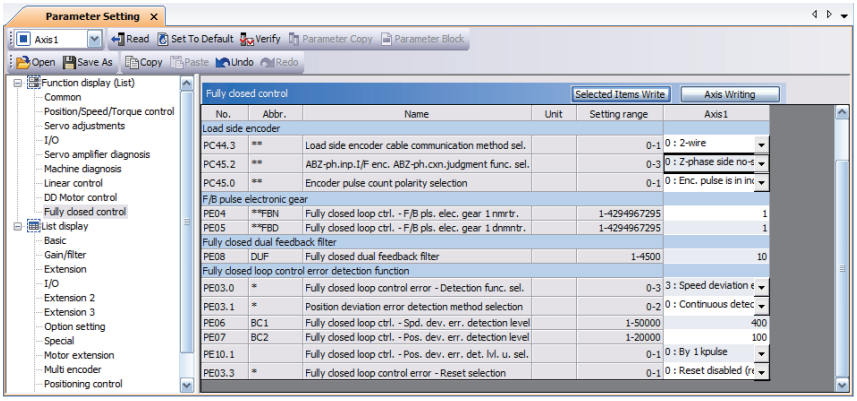	—
(n)	Parameter Setting (Electronic gear) [G] [B]	Set the servo parameters for the electronic gears. [Pr. PA06 Electronic gear numerator], [Pr. PA07 Electronic gear denominator]	—
	Parameter Setting (Electronic gear) [A]	Set the servo parameters for the electronic gears. [Pr. PA05 Number of command input pulses per revolution], [Pr. PA06 Electronic gear numerator], [Pr. PA07 Electronic gear denominator], [Pr. PA21.3 Electronic gear compatibility selection]	—

13.6 Options and peripheral equipment

MR-J4FCCBL03M branch cable

This branch cable is used to connect an encoder of the rotary servo motor/direct drive motor and load-side encoder to the CN2 connector.

When fabricating a branch cable by using an MR-J3THMCN2 connector set, refer to "Fabricating a branch cable for a fully closed loop system" in the following manual.

📖MR-J5 Partner's Encoder User's Manual

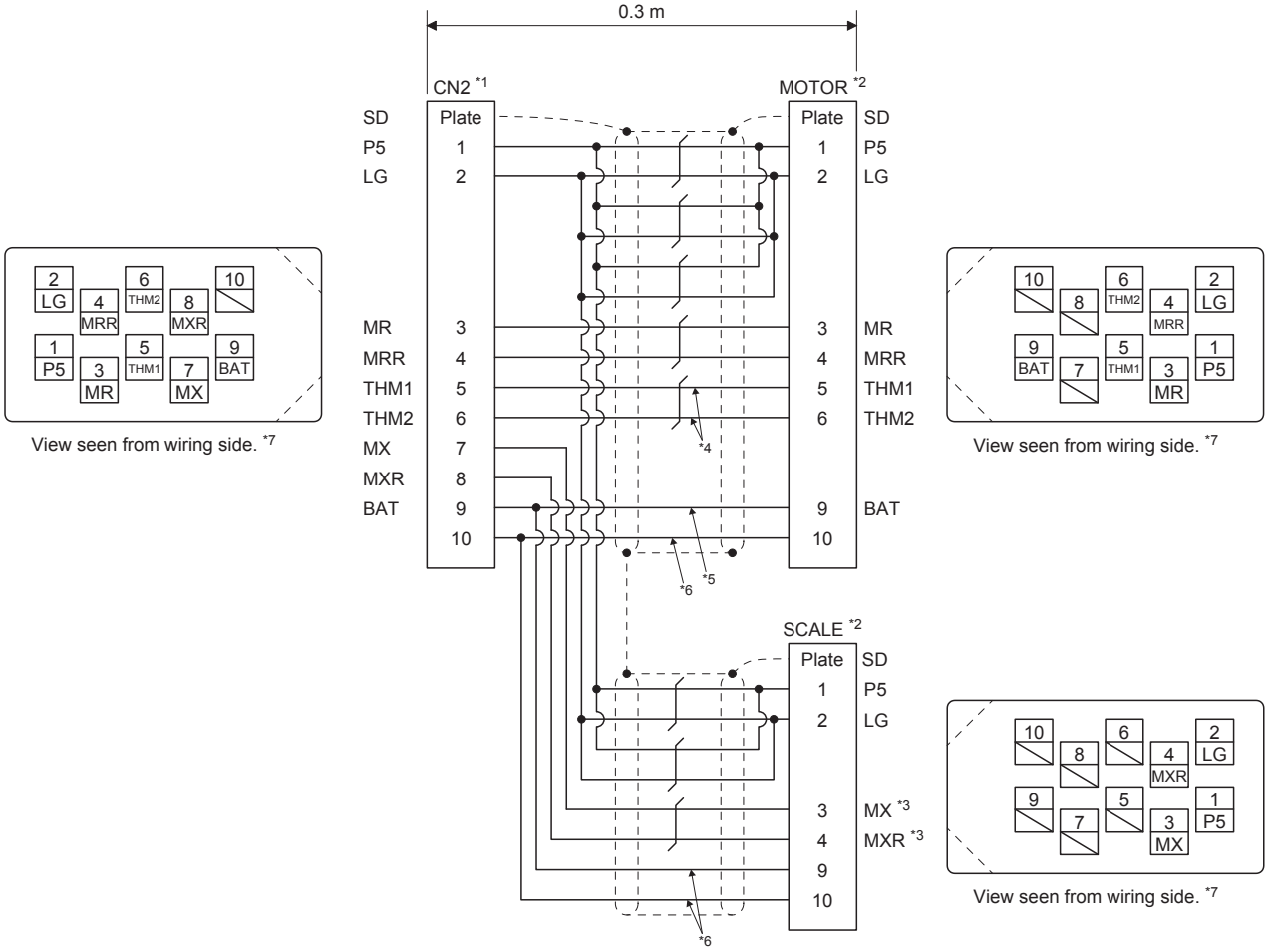

*1 Receptacle: 36210-0100PL, Shell kit: 36310-3200-008 (3M)

*2 Plug: 36110-3000FD, Shell kit: 36310-F200-008 (3M)

*3 MX and MXR of the SCALE connector are connected to MR and MRR of the load-side encoder, respectively.

*4 They must be wired to connect a direct drive motor to the MOTOR connector.

*5 It must be wired to use a battery. Refer to the following for the information on whether the battery is required or not.
☞ Page 311 Battery

*6 It does not need to be wired when a branch cable is produced.

*7 Do not connect anything to the pins that are marked with a diagonal line. Refer to "Shielding CN2, CN2A, CN2B, and CN2C connectors" in the following manual and assemble the external conductor of the shielded cable to the connector shell via the ground plate of the connector.
📖Rotary Servo Motor User's Manual (For MR-J5)

13.7 Absolute position detection system

Structure

An absolute position linear encoder is required to configure an absolute position detection system under fully closed loop control using a linear encoder.
In this case, an encoder battery need not be installed to the servo amplifier.
When a battery backup type rotary encoder is used, an absolute position detection system can be configured by installing the encoder battery to the servo amplifier.
When a batteryless rotary encoder is used, the encoder battery need not be mounted to the servo amplifier.

Restriction

- Use an absolute position type encoder for the load-side encoder.

Using an incremental type encoder triggers [AL. 037 Parameter error].

- When using the Mitsubishi Electric direct drive motor for the load-side encoder, the Z-phase must be passed through before homing.
- Switching between semi closed loop control and fully closed loop control cannot be performed. Set [Pr. PE01.0 Fully closed loop function selection] to "0" (Always enabled). If [Pr. PE01.0] is set to "1" (switching by "fully closed loop selection" from the controller (C_CLD) and by the input device "fully closed loop selection" (CLD)), [AL. 037] occurs.
- Use the encoder within the range of 32-bit absolute position data. When the degree unit is used, the infinite feed function is enabled. For details, refer to "Infinite feed function" in the following manual.

MR-J5 User's Manual (Function)

- When a linear encoder is used for the load-side encoder, absolute position-related alarms ([AL. 025 Absolute position erased]) and warnings ([AL. 092 Battery cable disconnection warning] and [AL. 09F Battery warning]) are not detected.

Precautions

When the absolute position detection system is configured with a rotary encoder, the battery life will be shortened because the current consumption is increased as the power from the battery is supplied to both the servo motor-side and the load-side encoder.
To set [Pr. PL01.0 Servo motor magnetic pole detection selection] to "0" (Magnetic pole detection disabled) by using the direct drive motor manufactured by Mitsubishi Electric, connect batteries and the absolute position storage unit (MR-BTAS01). Otherwise, [AL. 092 Battery cable disconnection warning] or [AL. 09F Battery warning] is detected. When [AL. 092] or [AL. 09F] occurs, setting [Pr. PL01.0] to "0" may not disable the magnetic pole detection.
When the fully closed loop system is used with a Mitsubishi Electric-manufactured direct drive motor connected to the servo motor side and an absolute position type linear encoder connected to the load side and [Pr. PL01.0] is set to "0", set [Pr. PA03.0 Absolute position detection system selection] to "1" (enabled (absolute position detection system)), and reset the controller or cycle the power to reflect the parameter setting. After reflecting the setting, cycle the power and turn on the Z-phase.

REVISIONS

*The manual number is given on the bottom left of the back cover.

Revision date	*Manual number	Description
July 2019	SH(NA)-030298ENG-A	First edition
January 2020	SH(NA)-030298ENG-B	■Information on the following functions is added: Fully closed loop system, touch probe, MR-J3-D05 safety logic unit ■Added/edited: Section 3.5, Section 6.16, Chapter 11
February 2020	SH(NA)-030298ENG-C	■Modified overload protection characteristics ■Edited: Section 5.1
July 2020	SH(NA)-030298ENG-D	■Items related to the following functions and models are added: Functional safety, MR-J5-500_ servo amplifier, MR-J5-700_ servo amplifier, FR-XC multifunction regeneration converter, J5-CHP07-10P cabinet-mounting attachment, J5-CHP08 grounding terminal attachment ■Added/edited: Section 1.2, Section 3.3, Chapter 4, Chapter 5, Section 6.1, Section 6.4, Section 6.10, Section 6.18, Section 6.19, Chapter 9
November 2020	SH(NA)-030298ENG-E	■Items related to the following functions and models are added: 400 V class servo amplifier, MR-RB3Z, MR-RB3Y-4, MR-RB3M-4, MR-RB3G-4, MR-RB5Z, MR-RB5G-4, MR-RB5Y-4, general-purpose output A, general-purpose output B, general-purpose output C, absolute position detection system via communication ■Added/edited: Section 1.2, Chapter 2, Section 2.4, Section 3.1, Section 3.3, Section 3.4, Section 3.5, Section 3.6, Section 4.1, Section 4.2, Section 4.3, Section 5.1, Section 5.2, Section 5.3, Section 5.5, Section 6.1, Section 6.2, Section 6.3, Section 6.4, Section 6.10, Section 6.11, Section 6.12, Section 6.14, Section 6.15, Section 6.16, Section 6.18, Section 6.19, Section 7.4
March 2021	SH(NA)-030298ENG-F	■Combinations with servo amplifiers and motors are added: HK-ST302W, HK-ST352W, HK-ST524W, HK-ST1024W, HK-ST1724W, HK-ST2024AW, HK-ST3024W, HK-ST2024W, HK-ST3524W ■Added/edited: Section 1.2, Section 2.1, Section 3.1, Section 3.3, Section 3.4, Section 3.5, Section 3.6, Section 3.7, Section 4.1, Section 4.2, Section 4.4, Section 5.2, Section 5.3, Section 5.5, Section 6.1, Section 6.2, Section 6.3, Section 6.4, Section 6.5, Section 6.7, Section 6.9, Section 6.10, Section 6.11, Section 6.12, Section 6.14, Section 6.15, Section 6.16, Section 7.1, Section 8.1, Section 9.1, Section 10.2, Section 10.4, Section 10.6, Section 11.2, Section 11.4, Section 11.5, Section 11.6, Section 12.4, Section 12.5
June 2021	SH(NA)-030298ENG-G	■HK-MT series servo motors are added. ■Edited: Section 1.1, Section 1.2, Section 1.3, Chapter 3, Section 3.1, Section 3.4, Section 3.5, Section 3.6, Section 3.7, Section 3.8, Section 4.1, Section 4.2, Section 4.3, Section 5.1, Section 5.2, Section 5.3, Section 6.1, Section 6.16, Section 6.19, Chapter 7, Section 7.1, Section 8.1, Section 8.2, Section 8.3, Chapter 9, Section 9.2, Section 9.3, Section 10.6, Section 11.2, Section 11.3, Section 11.6, Section 11.8, Section 12.1, Section 12.2, Section 12.4, Section 12.5
July 2022	SH(NA)-030298ENG-H	■MR-J5_-_B_ is added. ■Combinations with servo amplifiers and motors are added: HK-ST7M2UW, HK-ST172UW ■Combinations of servo amplifiers with the following linear servo motor are added: LM-AU ■Information on the following function is added: Absolute position detection system ■Added/edited: SAFETY INSTRUCTIONS, Section 1.1, Section 1.2, Chapter 2, Section 3.1, Section 3.2, Section 3.3, Section 3.4, Section 3.5, Section 3.6, Section 3.8, Section 4.3, Section 4.6, Section 5.1, Section 5.2, Section 5.3, Section 5.4, Chapter 6, Section 7.1, Section 7.2, Chapter 8, Chapter 9, Chapter 10, Chapter 11, Chapter 12
January 2023	SH(NA)-030298ENG-J	■Release information of the HK-ST_UW servo motor in the title page is deleted. ■A cooling fan is added. ■Added/edited: Section 1.2, Section 2.5, Section 2.6, Chapter 4, Chapter 5, Section 6.2, Section 6.9, Section 6.11, Section 7.1, Chapter 12

Revision date	*Manual number	Description
July 2023	SH(NA)-030298ENG-K	■Release information of the HK-ST_UW servo motor is deleted. ■Edited: Section 1.2, Chapter 5, Section 7.1
January 2024	SH(NA)-030298ENG-L	■The following model is added: MR-J5-_G_-HS_, MR-J5-500_4_, MR-J5-700_4_ ■Combinations with servo amplifiers and motors are added: HK-ST5034W, HK-ST5024W, HK-ST7024W, HK-RT5034W, HK-RT7034W ■Information on the following function is added: Functional safety ■Correction of errors in the overload protection characteristics of the linear servo motor and direct drive motor ■Added/edited: Section 1.2, Chapter 2, Section 2.1, Section 2.2, Section 2.5, Section 3.1, Section 3.2, Section 3.3, Section 3.4, Section 3.5, Section 3.6, Section 3.7, Section 4.1, Section 4.3, Section 4.5, Section 4.6, Section 5.1, Section 5.2, Section 5.3, Section 5.5, Section 6.1, Section 6.2, Section 6.4, Section 6.10, Section 6.11, Section 6.12, Section 6.13, Section 6.16, Section 6.17, Section 6.18, Section 6.21, Section 6.23, Section 7.1, Chapter 8, Section 8.1, Section 8.3, Section 9.1, Section 9.3, Section 9.5, Section 9.6, Section 9.7, Section 9.8, Section 9.9, Section 9.10, Chapter 10, Section 11.6, Section 12.5, Section 13.1, Section 13.2, Section 13.4

This manual confers no industrial property rights or any rights of any other kind, nor does it confer any patent licenses. Mitsubishi Electric Corporation cannot be held responsible for any problems involving industrial property rights which may occur as a result of using the contents noted in this manual.

© 2019 MITSUBISHI ELECTRIC CORPORATION

WARRANTY

Warranty

1. Warranty period and coverage

We will repair any failure or defect hereinafter referred to as "failure" in our FA equipment hereinafter referred to as the "Product" arisen during warranty period at no charge due to causes for which we are responsible through the distributor from which you purchased the Product or our service provider. However, we will charge the actual cost of dispatching our engineer for an on-site repair work on request by customer in Japan or overseas countries. We are not responsible for any on-site readjustment and/or trial run that may be required after a defective unit are repaired or replaced.

[Term]

For terms of warranty, please contact your original place of purchase.

[Limitations]

(1) You are requested to conduct an initial failure diagnosis by yourself, as a general rule.
It can also be carried out by us or our service company upon your request and the actual cost will be charged. However, it will not be charged if we are responsible for the cause of the failure.

(2) This limited warranty applies only when the condition, method, environment, etc. of use are in compliance with the terms and conditions and instructions that are set forth in the instruction manual and user manual for the Product and the caution label affixed to the Product.

(3) Even during the term of warranty, the repair cost will be charged on you in the following cases;

1. a failure caused by your improper storing or handling, carelessness or negligence, etc., and a failure caused by your hardware or software problem
2. a failure caused by any alteration, etc. to the Product made on your side without our approval
3. a failure which may be regarded as avoidable, if your equipment in which the Product is incorporated is equipped with a safety device required by applicable laws and has any function or structure considered to be indispensable according to a common sense in the industry
4. a failure which may be regarded as avoidable if consumable parts designated in the instruction manual, etc. are duly maintained and replaced
5. any replacement of consumable parts (battery, fan, smoothing capacitor, etc.)
6. a failure caused by external factors such as inevitable accidents, including without limitation fire and abnormal fluctuation of voltage, and acts of God, including without limitation earthquake, lightning and natural disasters
7. a failure generated by an unforeseeable cause with a scientific technology that was not available at the time of the shipment of the Product from our company
8. any other failures which we are not responsible for or which you acknowledge we are not responsible for

2. Term of warranty after the stop of production

(1) We may accept the repair at charge for another seven (7) years after the production of the product is discontinued. The announcement of the stop of production for each model can be seen in our Sales and Service, etc.

(2) Please note that the Product (including its spare parts) cannot be ordered after its stop of production.

3. Service in overseas countries

Our regional FA Center in overseas countries will accept the repair work of the Product. However, the terms and conditions of the repair work may differ depending on each FA Center. Please ask your local FA center for details.

4. Exclusion of loss in opportunity and secondary loss from warranty liability

Regardless of the gratis warranty term, Mitsubishi shall not be liable for compensation to:

(1) Damages caused by any cause found not to be the responsibility of Mitsubishi.

(2) Loss in opportunity, lost profits incurred to the user by Failures of Mitsubishi products.

(3) Special damages and secondary damages whether foreseeable or not, compensation for accidents, and compensation for damages to products other than Mitsubishi products.

(4) Replacement by the user, maintenance of on-site equipment, start-up test run and other tasks.

5. Change of Product specifications

Specifications listed in our catalogs, manuals or technical documents may be changed without notice.

6. Application and use of the Product

(1) For the use of our AC Servo, its applications should be those that may not result in a serious damage even if any failure or malfunction occurs in AC Servo, and a backup or fail-safe function should operate on an external system to AC Servo when any failure or malfunction occurs.

(2) Our AC Servo is designed and manufactured as a general purpose product for use at general industries.
Therefore, applications substantially influential on the public interest for such as atomic power plants and other power plants of electric power companies, and also which require a special quality assurance system, including applications for railway companies and government or public offices are not recommended, and we assume no responsibility for any failure caused by these applications when used.
In addition, applications which may be substantially influential to human lives or properties for such as airlines, medical treatments, railway service, incineration and fuel systems, man-operated material handling equipment, entertainment machines, safety machines, etc. are not recommended, and we assume no responsibility for any failure caused by these applications when used.
We will review the acceptability of the abovementioned applications, if you agree not to require a specific quality for a specific application. Please contact us for consultation.

(3) Mitsubishi Electric shall have no responsibility or liability for any problems involving programmable controller trouble and system trouble caused by DoS attacks, unauthorized access, computer viruses, and other cyberattacks.

TRADEMARKS

MELSERVO is a trademark or registered trademark of Mitsubishi Electric Corporation in Japan and/or other countries.
All other product names and company names are trademarks or registered trademarks of their respective companies.

SH(NA)-030298ENG-L(2401)MEE
MODEL:
MODEL CODE:

MITSUBISHI ELECTRIC CORPORATION

HEAD OFFICE: TOKYO BLDG., 2-7-3, MARUNOUCHI, CHIYODA-KU, TOKYO 100-8310, JAPAN
NAGOYA WORKS: 1-14, YADA-MINAMI 5-CHOME, HIGASHI-KU, NAGOYA 461-8670, JAPAN

When exported from Japan, this manual does not require application to the Ministry of Economy, Trade and Industry for service transaction permission.

Specifications subject to change without notice.
Compliance with the indicated global standards and regulations is current as of the release date of this manual.