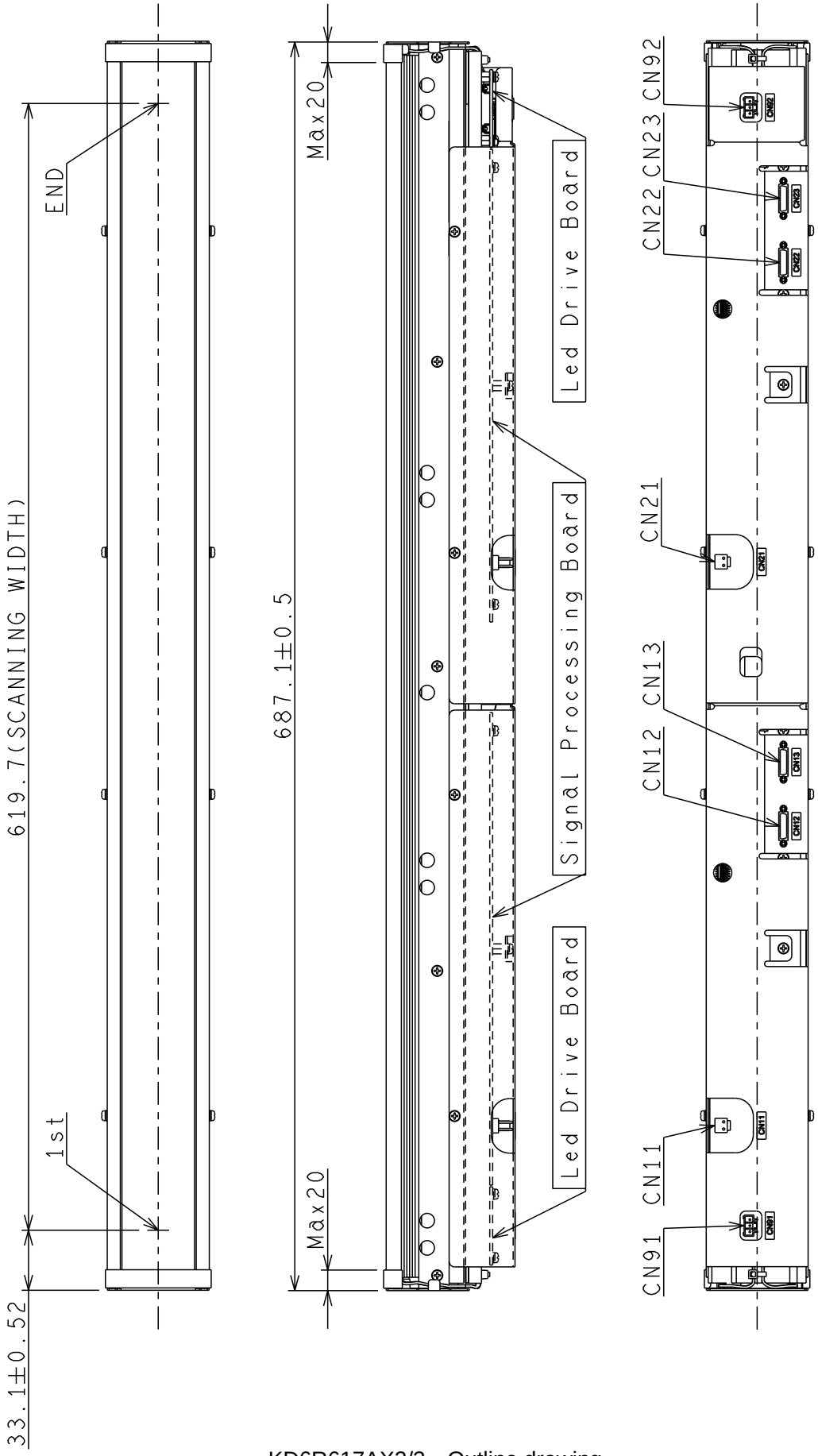

KD6R617AX2/3 Outline drawing

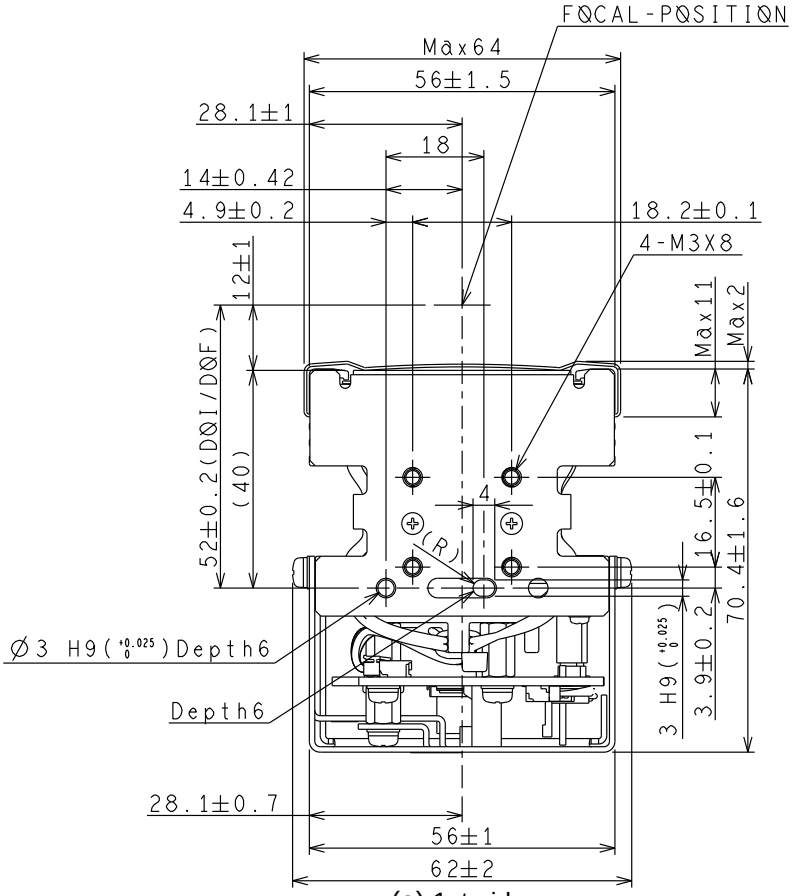

(a) 1st-side

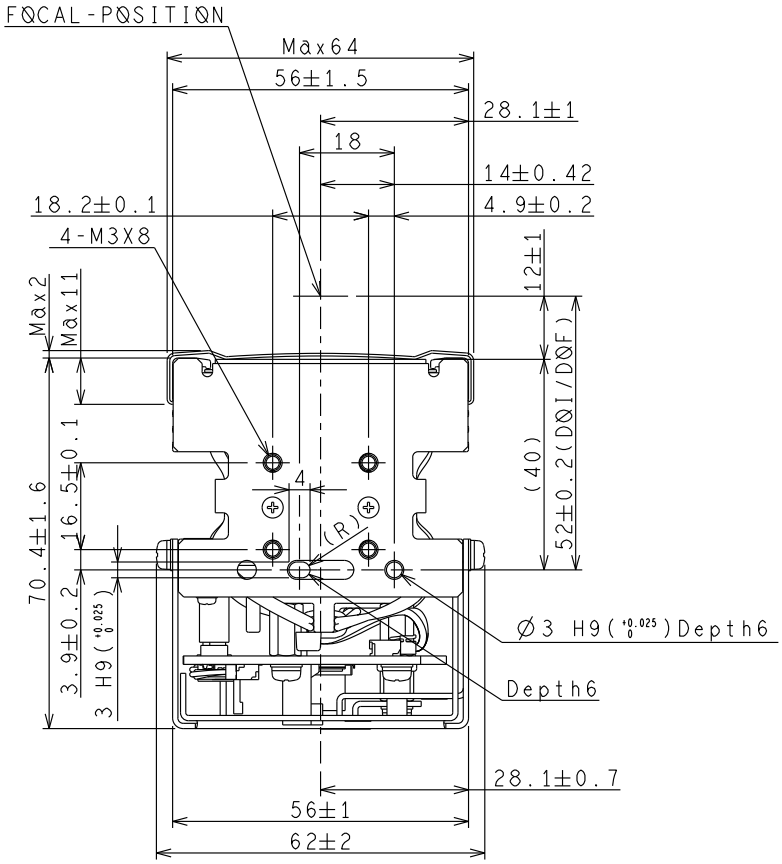

(b) End-side

Side view (common mechanism to the illumination models)