MITSUBISHI ELECTRIC

Changes for the Better

POWER DEVICES

POWER DEVICES

Innovative Power Devices for a Sustainable Future

Mitsubishi Electric power modules are at the forefront of the latest energy innovations that seek to solve global environmental issues while creating a more affluent and comfortable society for all. Some of these innovations are photovoltaic (PV) and wind power generation from renewable energy sources, smart grids realizing efficient supply of power, hybrid/electric vehicles (HVs/EVs) that take the next step in reducing carbon emissions and fuel consumption, and home appliances that achieve ground-breaking energy savings. Whether in appliances, railcars, EVs or industrial systems, our power modules are key elements in changing the way energy is used.

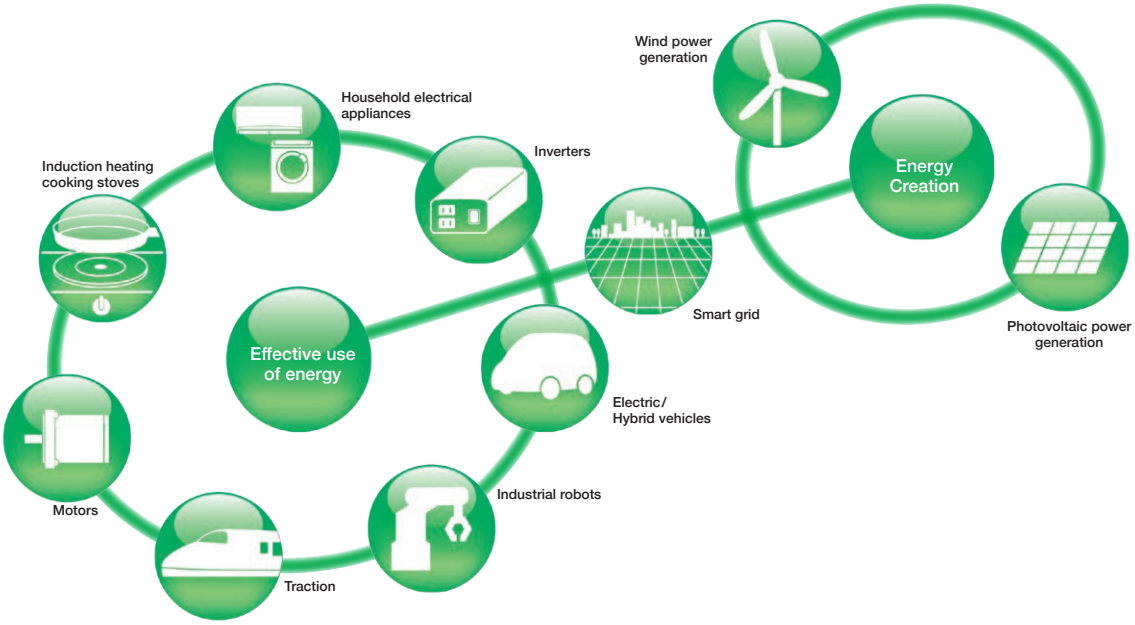

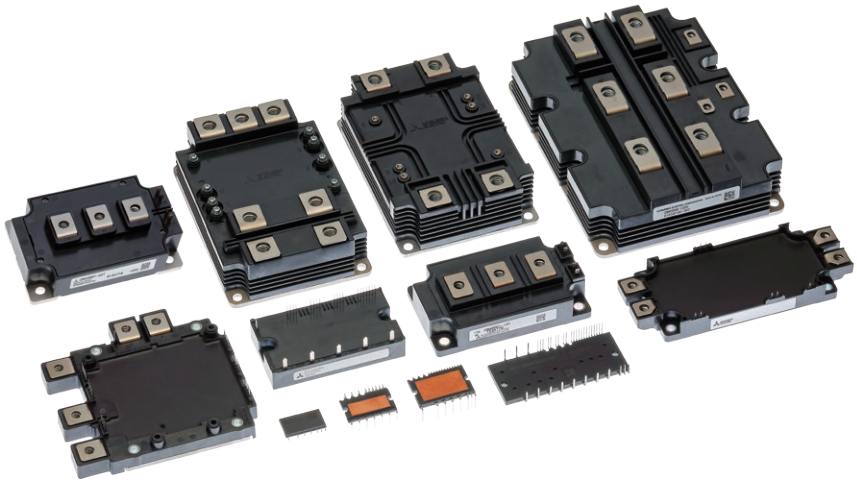

Index

Product	Page	Connection						Rated voltage	Rated current	Main Application
		IGBT Module	Intelligent Power Module	MOSFET Module	Diode Module	Discrete Diode	Discrete MOSFET			
SiC Power Modules	5-11	✓ (Hybrid)	✓	✓	✓			600V	15A-30A	Home Appliance Industrial equipment Traction
								1200V	75A-1200A	
								1700V	300A,1200A	
								3300V	185A-750A	
SOPIPM	12		✓					600V	2A	Home Appliance
DIPIPM	12-17		✓					600V	5A-75A	Home Appliance
								1200V	5A-100A	
IPM	18-21		✓					600V	75A	Industrial equipment
								650V	50A-450A	
								1200V	25A-450A	
IGBT Modules	22-31	✓						600V	200A-600A	Industrial equipment
								650V	50A-600A	
								1200V	35A-1400A	
								1700V	75A-1200A	
								2000V	200A-1200A	
HVIGBT Modules	32-34	✓						1700V	600A-2400A	Traction High Power
								3300V	400A-1800A	
								4500V	450A-1500A	
								6500V	600A-1000A	
HVDIODE Modules	35-36				✓			3300V	600A-1200A	Traction High Power
								4500V	450A-1500A	
								6500V	300A-1000A	
MOSFET Modules	37			✓				75V	100A-300A	Industrial equipment
								100V		
								150V		
Power Modules for xEV*1	38-39	✓						650V	300A-700A	xEV

*1 EV: Electric Vehicle

*2 SOPIPM, DIPIPM, SLIMDIP, DIPIPM+, DIPPFC and CSTBT are trademarks of Mitsubishi Electric

Development of Mitsubishi Electric SiC Power Devices and Power Electronics Equipment Incorporating Them

Mitsubishi Electric began developing SiC as a new material in the early 1990s. Pursuing special characteristics, we succeeded in developing various elemental technologies.
In 2010, we commercialized the first air conditioner in the world equipped with a SiC power device.
Furthermore, substantial energy-saving effects have been achieved for traction and FA machinery.
We will continue to provide competitive SiC power modules with advanced development and achievements from now on.

Early 1990s

Developed new material, silicon-carbide (SiC) power semiconductor, maintaining a lead over other companies

2000s

Developed various elemental technologies

2006

January 2006
Successfully developed SiC inverter for driving motor rated at 3.7kW

2009

February 2009
Verified 11kW SiC inverter, world's highest value*1 with approx. 70% reduction in power loss

November 2009
Verified 20kW SiC inverter, world's highest value*1 with approx. 90% reduction in power loss

2010

January 2010
Developed large-capacity power module equipped with SiC diode

October 2010
Launched "Kirigamine" inverter air conditioner

2011

January 2011
Verified highest power conversion efficiency*1 for solar power generation system power conditioner (domestic industry)*2

October 2011
Commercialized SiC inverter for use in railcars

2012

March 2012
Developed motor system with built-in SiC inverter

September 2012
Verified built-in main circuit system for railcars

July 2012
Began shipping samples of hybrid SiC

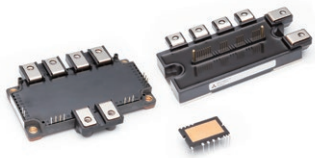

December 2012
Launched CNC drive unit equipped with SiC power module

2013

February 2013
Developed SiC for application in elevator control systems

March 2013
Delivered auxiliary power supply systems for railcars

2014

February 2014
Developed EV motor drive system with built-in SiC inverter

May 2014
Began shipping samples of hybrid SiC power modules for high-frequency switching applications

November 2014
Launched Large Hybrid SiC DIPIPM™ for PV Applications

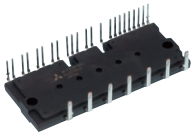

Development of these modules and applications has been partially supported by Japan's Ministry of Economy, Trade and Industry (METI) and New Energy and Industrial Technology Development Organization (NEDO).

* The year and month listed are based on press releases or information released during the product launch month in Japan.

Contributing to the realization of a low-carbon society and more affluent lifestyles

2017

March 2017
Launched SiC-SBD

March 2017
Develops World's smallest SiC Inverter for HEVs.

September 2017
Develops SiC Power Device with Record Power Efficiency

December 2017
Mitsubishi Electric and the University of Tokyo Quantify Factors for Reducing SiC Power Semiconductor Resistance by Two-Thirds

2018

January 2018
New 6.5kV Full-SiC Power Semiconductor Module Achieves World's Highest Power Density

December 2018
Mitsubishi Electric and the University of Tokyo Reveal New Mechanism for Enhancing Reliability of SiC Power Semiconductor Devices

2021

January 2021
Launched Second-generation Full-SiC Power Modules

2020

November 2020
Launched 4-terminal SiC-MOSFETs

July 2020
Launched SiC-MOSFET

July 2020
Develops Accurate Circuit Simulation Technology for SiC-MOSFETs

2015

January 2015
Launched power conditioner for PV equipped with full SiC-IPM*2

June 2015
Railcar traction system with full SiC power modules installed in Shinkansen bullet trains

2019

June 2019
Began shipping samples of 1200V SiC-SBD

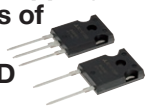

February 2019
Develops Super Compact Power Unit for Hybrid Electric Vehicle

September 2019
Trench-type SiC-MOSFET with unique electric-field-limiting structure developed

February 2013
Developed technologies to increase capacities of SiC power modules

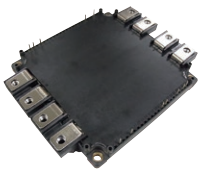

May 2013
Launched SiC power modules

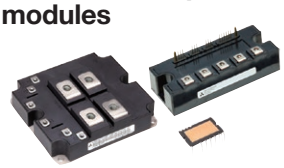

December 2013
Launched railcar traction inverter with full SiC power module

2016

April 2016
Launched Super mini Full SiC DIPIPM

October 2016
Launched package air conditioners with full SiC DIPIPM in Japan

May 2016
Launched room air conditioners with full SiC DIPIPM in Japan

*1 Researched in press releases by Mitsubishi Electric.
*2 Mitsubishi Electric solar-power generation system discontinued on March 31, 2020.

SiC Power Modules

Data sheet here

Lineup of SiC Power Modules

Application	Product name	Model	Rating Voltages[V]	Rating Current[A]	Connection	States	Page
Industrial equipment	Full SiC Power Modules	FMF300BXZ-24B	1200	300	4in1	Commercially available	6
		FMF400BX-24B		400			
		FMF400BXZ-24B		400			
		RMF400DU-24B		400	2in1(Diode)		
		FMF400DY-24B		400	2in1		
		FMF600DXZ-24B		600			
		FMF800DX-24B		800			
		FMF800DXZ-24B		800			
		FMF1200DXZ-24B		1200			
		FMF300DXZ-34B	1700	300			
		FMF300E3XZ-34B		300	2in1(Chopper)		
	Full SiC-IPM	PMF75CGA120	1200	75	6in1	Under development	7
		PMF75CGAL120					
	Hybrid SiC Power Modules for High-frequency Switching Applications	CMH100DY-24NFH	1200	100	2in1	Commercially available	
		CMH150DY-24NFH		150			
		CMH200DU-24NFH		200			
		CMH300DU-24NFH		300			
		CMH400DU-24NFH		400			
		CMH600DU-24NFH		600			
		CMH400HC6-24NFM		400	1in1		
Traction inverter HVDC system	Full SiC Power Modules	FMF185DC-66A	3300	185	2in1		8
		FMF375DC-66A		375			
		FMF750DC-66A		750			
		FMF750DC-66A-1		750			
	Hybrid SiC Power Modules	CMH600DC-66X	3300	600			
		CMH1200DC-34S	1700	1200			
Home appliances	Ful SiC Super mini DIPIPM	PSF15S92F6-A6	600	15	6in1		9
		PSF25S92F6-A6		25			
	Ful SiC Super mini DIPPFC	PSF30L92A6-A	600	30	2 Phase interleaved PFC		

Full-SiC Power Modules for Industrial Equipment

Commercially available

Contributes to reducing size/weight of industrial-use inverters

Features

- Power loss reduced approx. 70% compared to the conventional product*
- Low-inductance package(92.3mm x 121.7mm) adopted to deliver full SiC performance
- Package compatible with the conventional product(62mm x 108mm, 28mm terminal pitch)
- Contributes to incereasing the output current and downsizing peripheral components by low power loss characteristics of SiC

*Comparison with the same rated value of the conventional 7th Gen. IGBT modules

Product lineup

Model	Rated voltage	Rated current	Circuit configuration	Package size (D x W)
FMF400BX-24B	1200V	400A	4 in 1	92.3×121.7mm
RMF400DU-24B			2in1 (Diode)	80×110mm
FMF400DY-24B			2 in 1	62×108mm
FMF800DX-24B		800A		92.3×121.7mm

Power loss comparison

1200V/800A Full SiC Power module

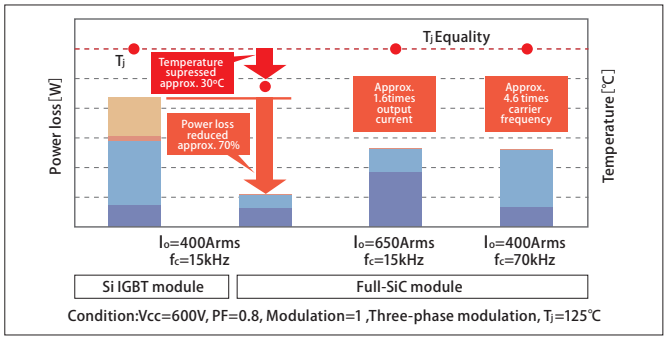

Full-SiC Power Modules for Industrial Equipment (built-in short-circuit protection function)

Commercially available

Contributes to enhancing the performance of industrial-use inverters thanks to built-in protection function for short circuit

Features

- By using short circuit monitoring circuit in the module it is possible to transfer a short circuit detection signal to the system side
- Power loss reduced approx.70% compared to the conventional product*
- Low- inductance package adopted to deliver full SiC performance

*Comparison with the same rated value of the conventional 7th Gen. IGBT modules

Product lineup

Model	Rated voltage	Rated current	Circuit configuration	Package size (D x W)
FMF300BXZ-24B	1200V	300A	4 in 1	79.6×122mm
FMF400BXZ-24B		400A	4 in 1	
FMF600DXZ-24B		600A	2 in 1	
FMF800DXZ-24B		800A	2 in 1	
FMF1200DXZ-24B		1200A	2 in 1	152×122mm
FMF300DXZ-34B	1700V	300A	2 in 1	79.6×122mm
FMF300E3XZ-34B		300A	2 in 1 (Chopper)	

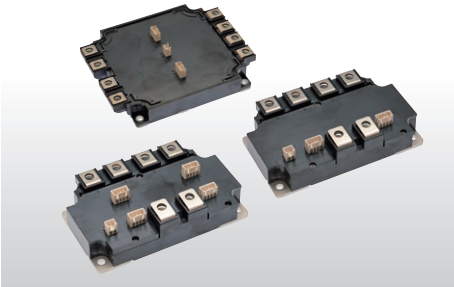

Protection circuit diagram

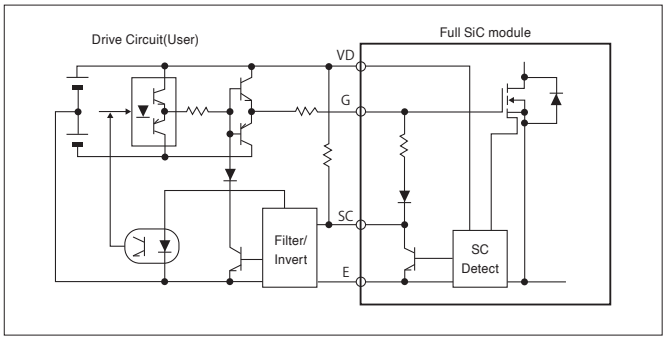

Power loss comparison

1200V/800A Full SiC Power module

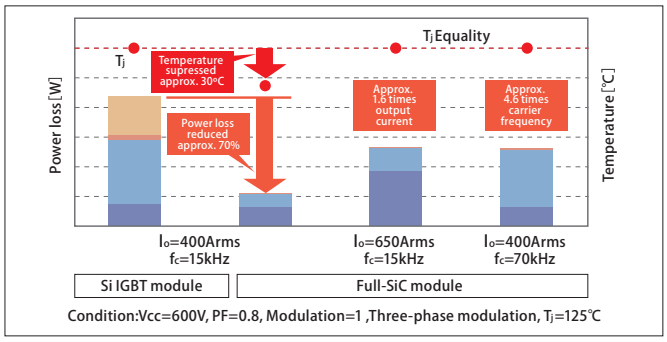

1200V/75A Full SiC-IPM for Industrial Equipment PMF75CGA120/PMF75CGAL120 Under development

SiC chips(MOSFET and Schottky Barrier Diode) incorporated in an IPM with a built-in drive circuit and protection functions Power loss reduction of approx.70% contributes to improving the performance of industrial equipment

Features

- Realized high performance and low power loss by 2nd. generation SiC-MOSFET and SiC-SBD with current sense and temperature sense
- External size is reduced approx.30% with the conventional Silicon IPM products* of the same rating.
- Available to drive it by the equivalent I/F and power supply circuit with the Silicon IPM products.

* Conventional product: Mitsubishi Electric G1 Series PM75CG1B120

Internal circuit diagram

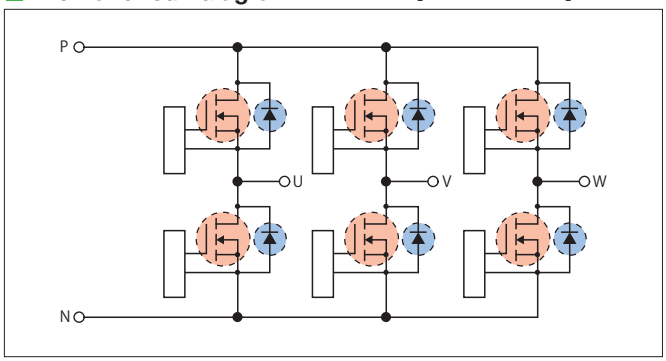

Power loss comparison

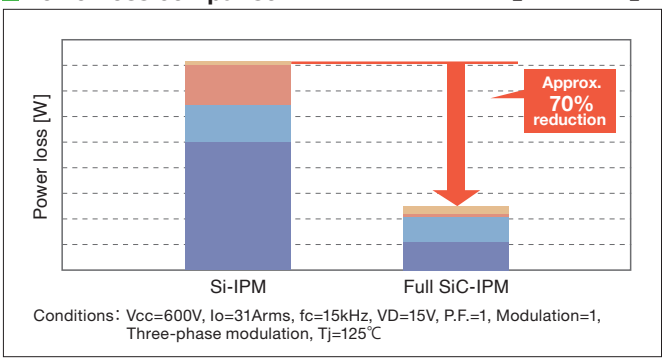

Hybrid SiC Power Modules for High-frequency Switching Applications Commercially available

For optimal operation of power electronics devices that conduct high-frequency switching

Features

- Power loss reduction of approx. 40% contributes to higher efficiency, smaller size and weight reduction of total system
- Suppresses surge voltage by reducing internal inductance
- Package compatible with the conventional product*

* Conventional product: Mitsubishi Electric NFH Series IGBT Modules

Product lineup

Applications	Model	Rated voltage	Rated current	Circuit configuration	External size (D x W)
Industrial equipment	CMH100DY-24NFH	1200V	100A	2 in 1	48×94mm
	CMH150DY-24NFH		150A		48×94mm
	CMH200DU-24NFH		200A		62×108mm
	CMH300DU-24NFH		300A		62×108mm
	CMH400DU-24NFH		400A		80×110mm
	CMH600DU-24NFH		600A		80×110mm
	CMH400HC6-24NFM		400A	1 in 1	62×108mm

Recovery waveform (FWD)

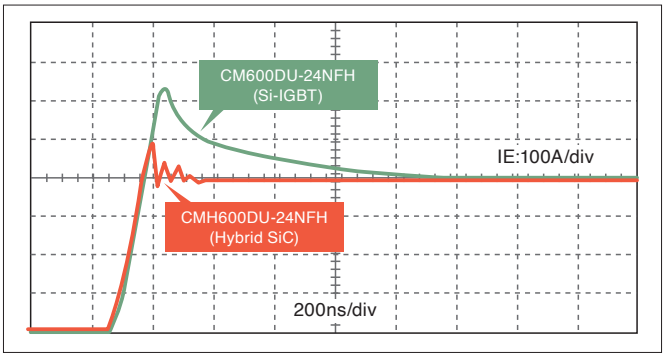

Power loss comparison

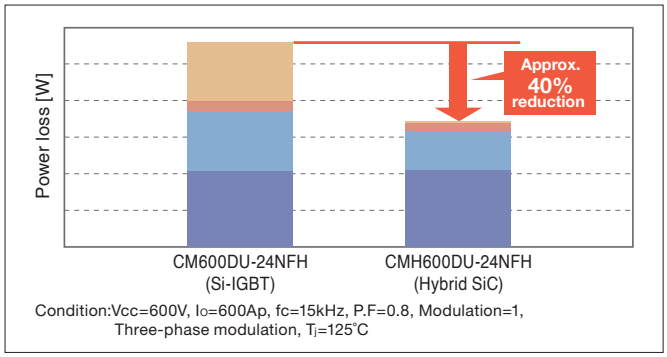

3300V Full/Hybrid SiC Power Modules for Traction Inverters and HVDC system FMF185DC-66A / FMF375DC-66A FMF750DC-66A / FMF750DC-66A-1 / CMH600DC-66X

Commercially available

Contributes to energy saving and downsizing for inverters in traction motors, DC-power transmitters, large industrial machinery

Features

- Suitable chip set combination for high speed switching
- Reduced power loss compared to the conventional products*
- Low inductance package maximize SiC perfomance

* Si product: Mitsubishi Electric HVIGBT, CM600DC-66X

Product lineup

	Model	Rated Voltage	Rated Current	Circuit configuration	External size (D x W)
Full SiC	FMF185DC-66A★	3300V	185A	2 in 1	100 × 140 mm
	FMF375DC-66A		375A		
	FMF750DC-66A		750A		
	FMF750DC-66A-1★(*)		750A		
Hybrid SiC	CMH600DC-66X		600A		

(*)Thermistor-equipped ★:New Product

Internal circuit diagram (e.g. Full SiC)

:SiC-MOSFET :SiC-SBD

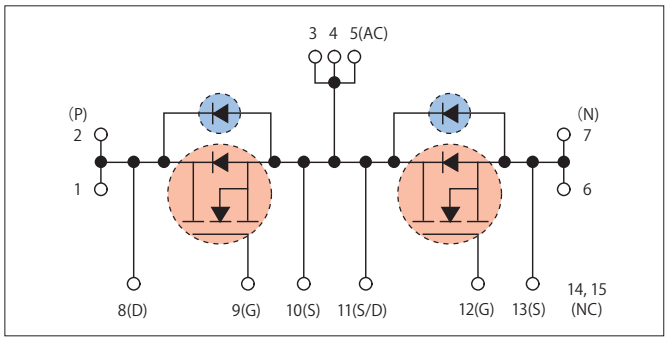

Power loss comparison

FWD_SW IGBT_SW FWD_DC IGBT_DC

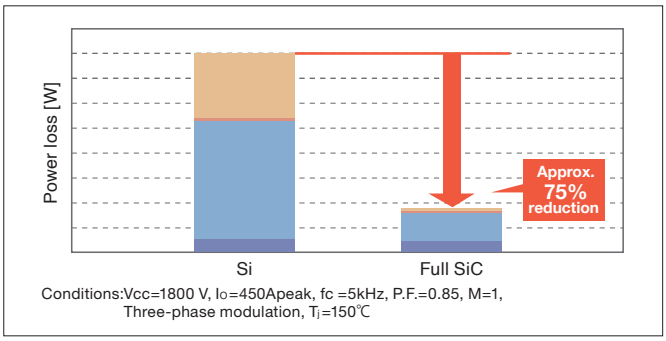

Conditions:Vcc=1800 V, Io=450Apeak, fc =5kHz, P.F.=0.85, M=1, Three-phase modulation, Tj=150℃

1700V/1200A Hybrid SiC Power Modules for Traction Inverters CMH1200DC-34S

Commercially available

High-power/low-loss/highly reliable modules appropriate for use in traction inverters

Features

- Power loss reduced approximately 30% compared to the conventional product*
- Highly reliable design appropriate for use in traction
- Package compatible with the conventional product*

* Conventional product: Mitsubishi Electric Power Module CM1200DC-34N

Main specifications

Module	Max.operating temperature		150˚C
	Isolation voltage		4000Vrms
Si-IGBT @150˚C	Collector-emitter saturation voltage		2.3V
	Switching loss 850V/1200V	turn-on	140mJ
		turn-off	390mJ
SiC-SBD @150˚C	Emitter-collector voltage		2.3V
	Capacitive charge		9.0μC

Internal circuit diagram

:SiC-SBD

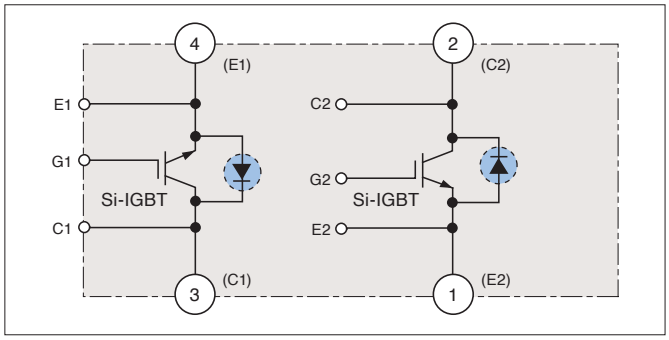

Power loss comparison

FWD_SW IGBT_SW FWD_DC IGBT_DC

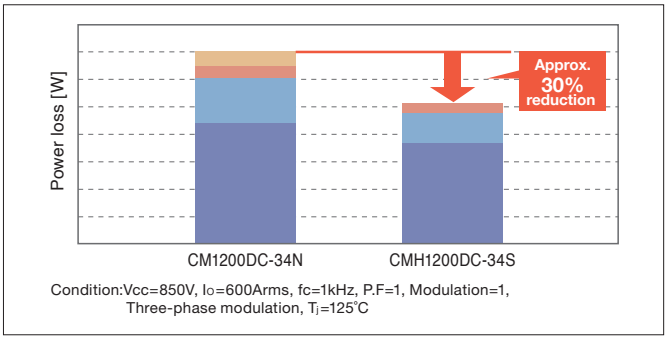

Condition:Vcc=850V, Io=600Arms, fc=1kHz, P.F=1, Modulation=1, Three-phase modulation, Tj=125℃

600V/15A,25A Full SiC Super mini DIPIPM™ for Home Appliances PSF15S92F6-A6/PSF25S92F6-A6

Commercially available

Contributes to extremely high power-efficiency in air conditioners, and easily applicable to industrial equipment

Features

- SiC-MOSFET achieves reduction in ON resistance, power loss reduced approx. 70% compared to conventional product*
- Construct low-noise system by reducing recovery current
- Numerous built-in functions: Bootstrap diode for power supply to drive P-side, temperature information output, etc.
- Unnecessary minus-bias gate drive circuit using original high Vth SiC-MOSFET technology
- As package and pin layout compatibility with conventional products* is ensured, simply replace with this product to improve performance

*Conventional product: Mitsubishi Electric Super mini DIPIPM Series

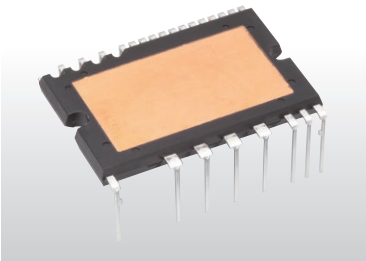

Internal block diagram

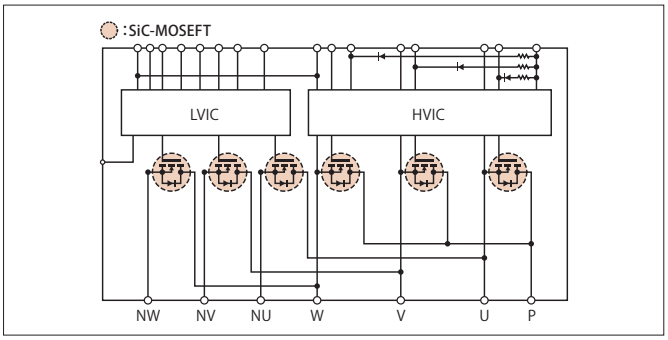

Power loss comparison

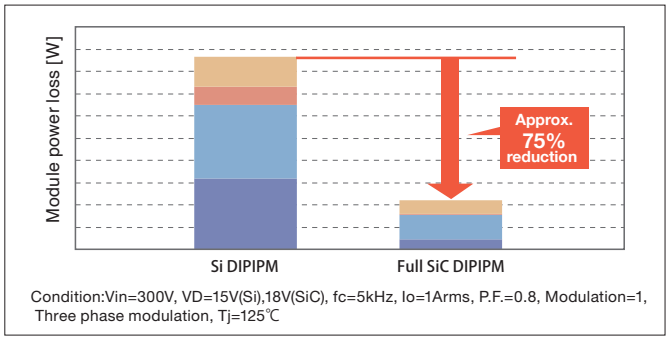

Condition:Vin=300V, VD=15V(Si),18V(SiC), fc=5kHz, Io=1Arms, P.F.=0.8, Modulation=1, Three phase modulation, Tj=125℃

Full SiC Super mini DIPPFC™ for Home Appliances PSF30L92A6-A

Commercially available

Utilizing SiC enables high-frequency switching and contributes to reducing the size of peripheral components

Features

- Incorporating SiC chip in the Super mini package widely used in home appliances
- The SiC chip allows high-frequency switching (up to 40kHz) and contributes to downsizing the reactor, heat sink and other peripheral components
- Adopts the same package as the Super mini DIPIPM to eliminate the need for a spacer between the inverter and heat sink, and to facilitate its implementation

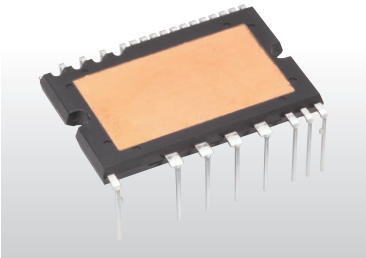

Internal block diagram (PSF30L92A6-A)

:SiC-MOSFET :SiC-SBD

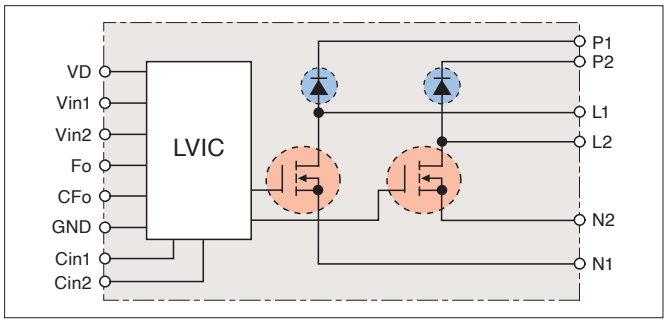

Power loss comparison

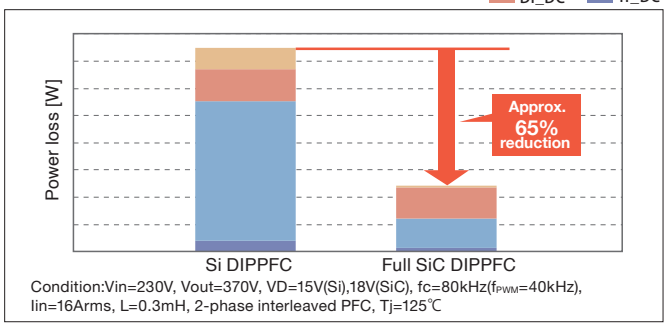

Condition:Vin=230V, Vout=370V, VD=15V(Si),18V(SiC), fc=80kHz(f_{PWM}=40kHz), Iin=16Arms, L=0.3mH, 2-phase interleaved PFC, Tj=125℃

Outline Drawing of SiC Power Modules

Unit:mm

Full SiC Power Modules for Industrial Equipment
FMF400BX-24B,
FMF800DX-24B

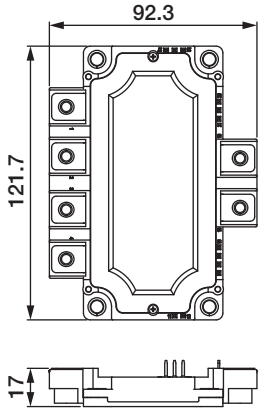

Full SiC Power Modules for Industrial Equipment
FMF400DY-24B

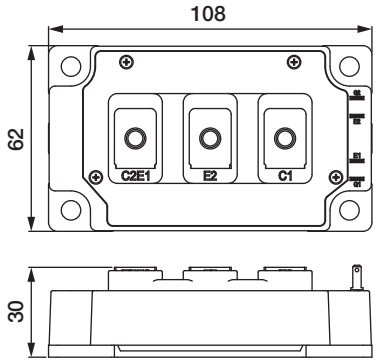

Full SiC Power Modules for Industrial Equipment
FMF300BXZ-24B
FMF400BXZ-24B

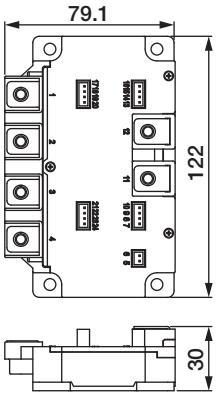

Full SiC Power Modules for Industrial Equipment
FMF600DXZ-24B/FMF800DXZ-24B
FMF300DXZ-34B/FMF300E3XZ-34B

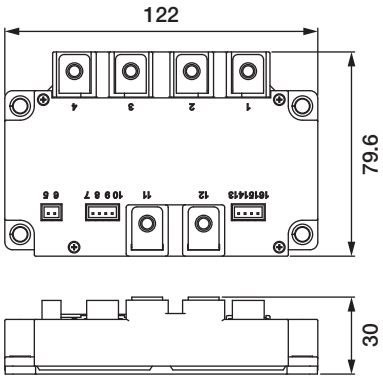

Full SiC Power Modules for Industrial Equipment
FMF1200DXZ-24B

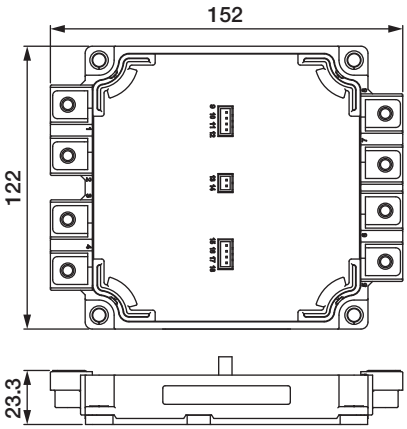

Full SiC IPM for Industrial Equipment
PMF75CGA120
PMF75CGAL120

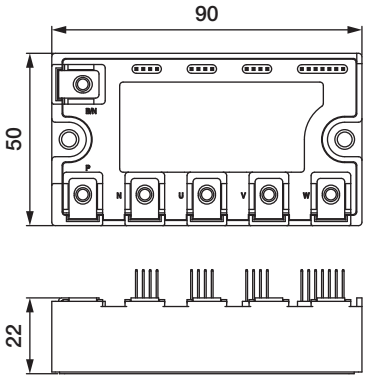

Hybrid SiC Power Modules for High-frequency Switching Applications
CMH100DY-24NFH
CMH150DY-24NFH

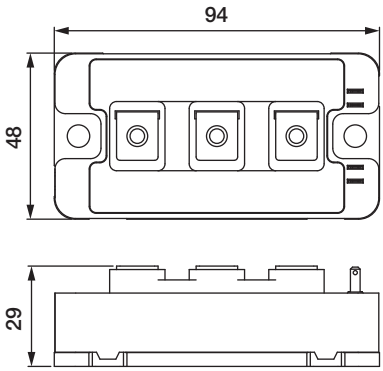

Hybrid SiC Power Modules for High-frequency Switching Applications
CMH200DU-24NFH
CMH300DU-24NFH

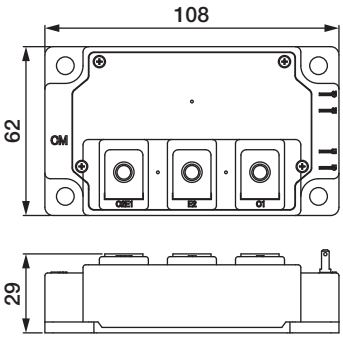

Hybrid SiC Power Modules for High-frequency Switching Applications
CMH400DU-24NFH
CMH600DU-24NFH
Full SiC Power Modules for Industrial Equipment
RMF400DU-24B

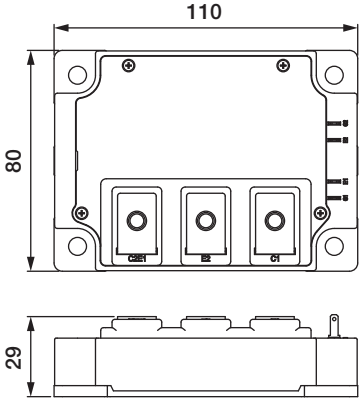

Outline Drawing of SiC Power Modules

Unit:mm

Hybrid SiC Power Modules for High-frequency Switching Applications
CMH400HC6-24NFM

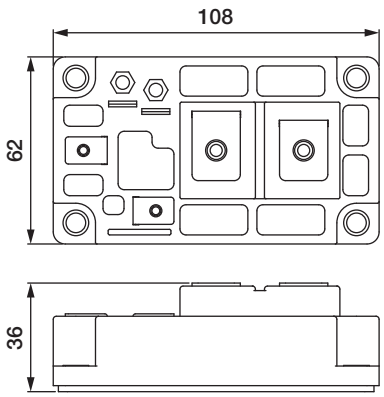

3300V Full/Hybrid SiC Power Modules for Traction Inverters and HVDC system
FMF185/375/750DC-66A
FMF750DC-66A-1
CMH600DC-66X

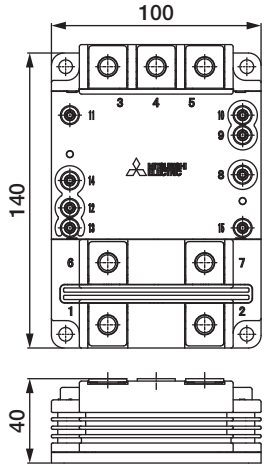

1700V/1200A Hybrid SiC Power Module for Traction Inverters
CMH1200DC-34S

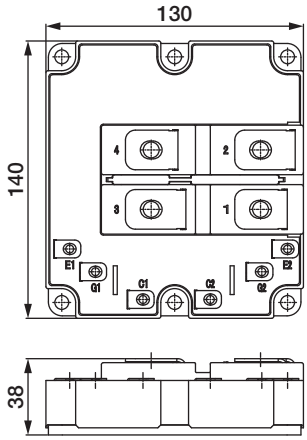

Full SiC Super mini DIPIPM™
PSF15S92F6-A6/PSF25S92F6-A6
Full SiC Super mini DIPPFC™
PSF30L92A6-A
Long

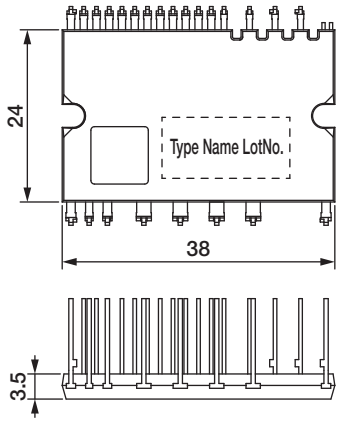

Package, Main Application

Package	Main application
SOPIPM	Fan motor
SLIMDIP	Air conditioner/Fan motor/Washing machine/Refrigerator
Super mini	Air conditioner/Washing machine/Servo/Robot
Mini	Air conditioner/Motion control
Large	Commercial air conditioner/Motion control
DIPIPM+	Commercial air conditioner/Motion control
Large DIPIPM+	Commercial air conditioner/Motion control

Data sheet here

Rated Lineup

Featured Products

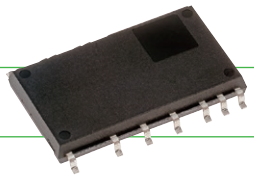

Surface mount package IPM SOPIPM

A small surface mount package IPM enables easy system design by enough insulation distance and protection function for fan and low-power motor drive applications

<Main Features>
- Optimal pin layout realizes easier PCB wiring design and enables smaller PCB size
- Insulation distance between pins ensured, realizing easier board mounting without coating process
- Newly integrated interlock function in addition to conventional protection features for robust operation
- Installing RC-IGBT*1 simultaneously realizes compact package and low loss performance can go thogether
- Bootstrap diode is integrated for the P-side drive power supply like conventional DIPIPM series, reducing the number of peripheral external parts

*1 Reverse-conducting IGBT

Outline Drawing

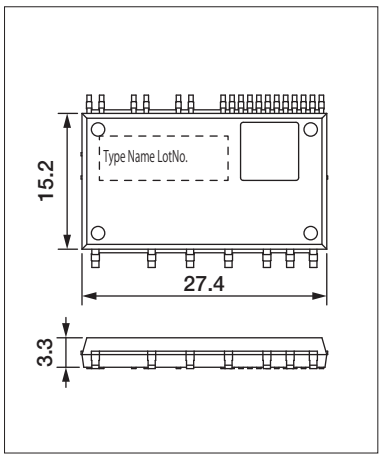

SOPIPM

Type name	Rated voltage	Rated current	Chips	Protection	Shape
SP2SK	600V	2A	RC-IGBT, HVIC, LVIC, BSD	UV, SC, OT V_{OT}, IL	Surface mount package

[Term] UV : Power supply Under Voltage protection
SC : Short Circuit protection
OT : Over Temperature protection
V_{OT} : Analog Temperature Output
IL : Inter Lock

Featured Products

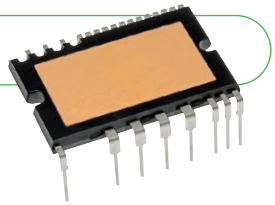

New design with expanded operating temperature range and lower noise contributes to easier system design and reduction in system cost

Super Mini DIPIPM Ver.7

<Main Features>
- New low-noise 7th-generation CSTBT*1 incorporated, keeping same efficiency as DIPIPM Ver.6 Series. System cost reduction for noise suppression parts achieved.
- Maximum junction temperature range expanded to 175°C, supporting instantaneous overcurrent capability at overload operation
- Wider terminal base shape contributes to improved terminal strength and suppresses increase in temperature
- High compatibility for terminal layout, easy to replase from the conventional series

*1 CSTBT™: Mitsubishi Electric's unique IGBT that makes use of the carrier cumulative effect

Radiation noise

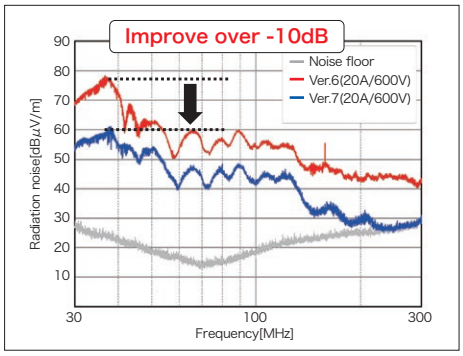

Featured Products

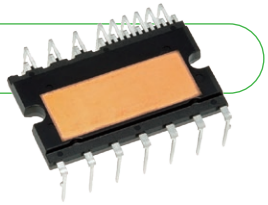

Expanded line up for SLIMDIP series contributes system cost down for home appliances and fan drive application.

SLIMDIP™ SLIMDIP-S, SLIMDIP-M, SLIMDIP-L, SLIMDIP-W, SLIMDIP-X, SLIMDIP-Z

<Main Features>
- RC-IGBT*1 incorporated, reducing package size 30% compared to Super mini DIPIPM
- Maximum case temperature expanded to 115°C, increasing the operating temperature range and leading to easier system design temperature range and leading to easier system design
- Additional terminals for floating supply and built-in bootstrap diodes simplify PCB wiring pattern
- Both V_{OT}*2 and OT*3 functions integrated for temperature protection
- Expanded lineup accommodates wide-ranging inverter capacities

*1 Reverse conducting IGBT *2 V_{OT} : Analog Temperature Output *3 OT : Over Temperature protection

Product lineup

Type name	Main application
SLIMDIP-S	Fan, refrigerator
SLIMDIP-M	Fan, washing machine
SLIMDIP-L	Air conditioner
SLIMDIP-W	Washing machine, Fan
SLIMDIP-X	Air conditioner
SLIMDIP-Z	Air conditioner

Wiring example

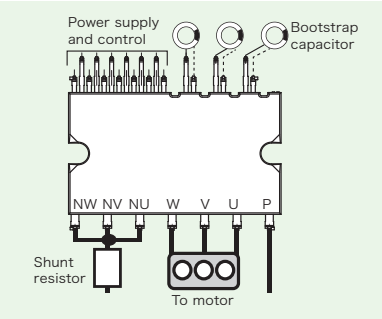

Customer Support

EVA Series evaluation boards for each DIPIPM Series to support system design

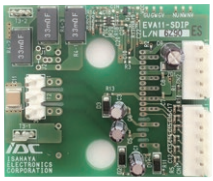

For Super mini DIPIPM
EVA11-SDIP

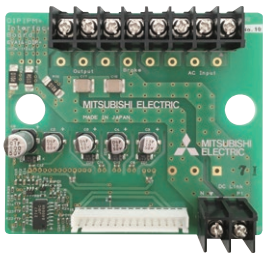

For DIPIPM+
EVA14-DIP+

For SOPIPM
EVA18-SOP

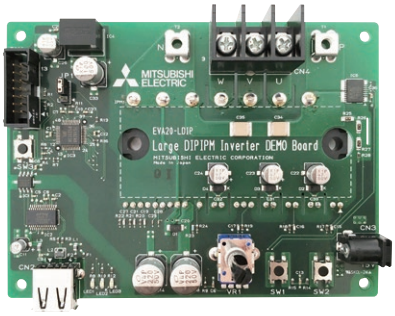

For Large DIPIPM Series
(Microcomputer-embedded demonstration board)
EVA20-LDIP

* For further information, please contact sales office.

Series Matrix of 600V DIPIPM

V_{CES}	600V						
Series / I_C	SLIMDIP	Super mini		Mini		Large	DIPIPM+
		Ver.7	Ver.6	Ver.7	–	Ver.6	CIB/CI
5A	SLIMDIP-S		PSS05S92F6-AG PSS05S92E6-AG		PSS05S51F6		
10A	SLIMDIP-M		PSS10S92F6-AG PSS10S92E6-AG		PSS10S51F6		
15A	SLIMDIP-L SLIMDIP-W	PSS15S93F6-AG PSS15S93E6-AG	PSS15S92F6-AG PSS15S92E6-AG		PSS15S51F6		
20A	SLIMDIP-X	PSS20S93F6-AG PSS20S93E6-AG	PSS20S92F6-AG PSS20S92E6-AG	PSS20S73F6	PSS20S51F6 PSS20S71F6		
30A	SLIMDIP-Z★	PSS30S93F6-AG PSS30S93E6-AG	PSS30S92F6-AG PSS30S92E6-AG	PSS30S73F6	PSS30S71F6		
35A			PSS35S92F6-AG PSS35S92E6-AG				
40A		PSS40S93F6-AG PSS40S93E6-AG					
50A				PSS50S73F6	PSS50S71F6	PSS50SA2F6	PSS50MC1F6 PSS50NC1F6*5
75A						PSS75SA2F6	
Chip	RC-IGBT	CSTBT	CSTBT	CSTBT	CSTBT	CSTBT	CSTBT
Protective Function: UV	P-side/N-side	P-side/N-side	P-side/N-side	P-side/N-side	P-side/N-side	P-side/N-side	P-side/ N-side/ Brake
Protective Function: SC	N-side	N-side	N-side	N-side	N-side	N-side with sense	N-side
Protective Function: OT	N-side	N-side*1	N-side*1	–	–	–	–
Protective Function: VOT	N-side	N-side*1	N-side*1	N-side	N-side	N-side	N-side
Specifications: Active input	High(3/5V)	High(3/5V)	High(3/5V)	High(3/5V)	High(3/5V)	High(3/5V)	High(5V)
Specifications: Emitter pin of N-side	Open	Open	Open	Open	Open	Open	Open
Specifications: Fault output	N-side(UV,SC,OT)	N-side (UV,SC,OT)	N-side(UV,SC,OT)	N-side (UV,SC)	N-side (UV,SC)	N-side (UV,SC)	N-side (UV,SC)
Specifications: Insulation voltage	2000Vrms*2	1500Vrms*2	1500Vrms*2	2500Vrms	2500Vrms	2500Vrms	2500Vrms
Specifications: Insulation structure	Insulation sheet	Insulation sheet	Insulation sheet	Insulation sheet	Molding resin*4/Insulation sheet	Insulation sheet	Insulation sheet
Specifications: RoHS directive*6	Compliant	Compliant	Compliant	Compliant	Compliant*3	Compliant	Compliant
Specifications: Pin type*7	Control side of Zigzag (Normal, Short)	Long	Long	Short	Control side of Zigzag, Short	–	–

★: New Product

[Notes] ＊1：PSSxxS9xE6 has OT function, PSSxxS9xF6 has V_{OT} function
＊2：AC60Hz,1minute.Corresponds to isolation voltage 2500Vrms in the case the convex-shaped heat sink
＊3：High melting point solder (Lead Over 85%) is used for chip soldering of PSSxxS51F6 only.
＊4：Molding resin insulation for PSSxxS51F6/-C
＊5：PSS50NC1F6 is not included brake.
＊6：RoHS directive (2011/65/EU and (EU) 2015/863)
＊7：Refer the datasheet of each product for more detail

[Term] CSTBT™: Mitsubishi Electric's unique IGBT that makes use of the carrier cumulative effect
RC-IGBT: Reverse conducting IGBT
HVIC: High Voltage IC
UV: Power supply Under Voltage protection
OT: Over Temperature protection
SC: Short Circuit protection
V_{OT}: Analog Temperature Output
RoHS: Restriction of the use of certain Hazardous Substances in electrical and electronic equipment
CIB: Converter Inverter Brake,
CI: Converter Inverter

Application circuit of super mini DIPIPM

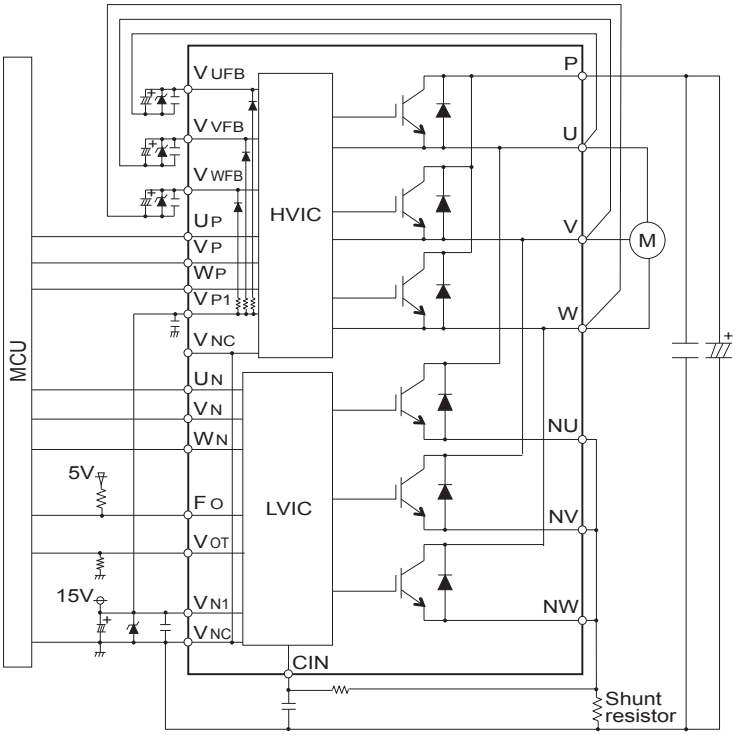

Series Matrix of 1200V DIPIPM

V_{CES}	1200V				
Series / I_C	Mini		Large	DIPIPM+	Large DIPIPM+
	Ver.7	–	Ver.6	CIB/CI	CI
5A	PSS05S73FT	PSS05S72FT	PSS05SA2FT	PSS05MC1FT PSS05NC1FT*1	
10A	PSS10S73FT	PSS10S72FT	PSS10SA2FT	PSS10MC1FT PSS10NC1FT*1	
15A	PSS15S73FT		PSS15SA2FT	PSS15MC1FT PSS15NC1FT*1	
25A	PSS25S73FT		PSS25SA2FT	PSS25MC1FT PSS25NC1FT*1	
35A			PSS35SA2FT	PSS35MC1FT PSS35NC1FT*1	
50A			PSS50SA2FT		PSS50NE1CT
75A			PSS75SA2FT		PSS75NE1CT
100A					PSS100NE1CT
Chip	CSTBT	CSTBT	CSTBT	CSTBT	CSTBT
Protective Function: UV	P-side/N-side	P-side/N-side	P-side/N-side	P-side/N-side/Brake	P-side/N-side
Protective Function: SC	N-side	N-side	N-side	N-side	N-side
Protective Function: OT	–	–	–	–	–
Protective Function: V_{OT}	N-side	N-side	N-side	N-side	N-side
Specifications: Active input	High(5V)	High(5V)	High(5V)	High(5V)	High(3/5V)
Specifications: Emitter pin of N-side	Open	Open	Open	Open	Open
Specifications: Fault output	N-side (UV,SC)	N-side (UV,SC)	N-side (UV,SC)	N-side (UV,SC)	N-side (UV,SC)
Specifications: Insulation voltage	2500Vrms	2500Vrms	2500Vrms	2500Vrms	2500Vrms
Specifications: Insulation structure	Insulation sheet	Insulation sheet	Insulation sheet	Insulation sheet	Insulation sheet
Specifications: RoHS directive*2	Compliant	Compliant	Compliant	Compliant	Compliant
Specifications: Pin type	–	–	–	–	–

[Notes] *1: PSS**NC1FT is not included brake
*2: RoHS directive (2011/65/EU and (EU) 2015/863)

[Term] CSTBT™: Mitsubishi Electric's unique IGBT that makes use of the carrier cumulative effect
UV: Supply Under Voltage protection
OT: Over Temperature protection
SC: Short Circuit protection
V_{OT}: Analog Temperature Output
RoHS: Restriction of the use of certain Hazardous Substances in electrical and electronic equipment
CIB: Converter Inverter Brake
CI: Converter Inverter

Type Name Definition of DIPIPM

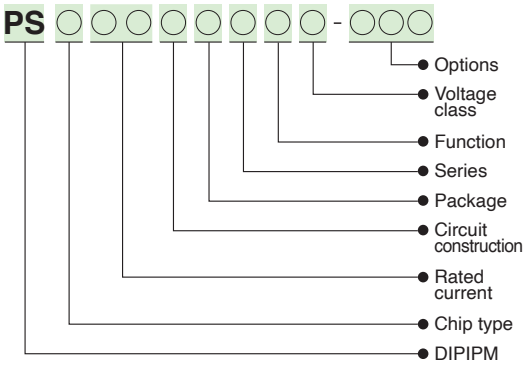

Outline Drawing of DIPIPM

Unit:mm

SLIMDIP
Normal

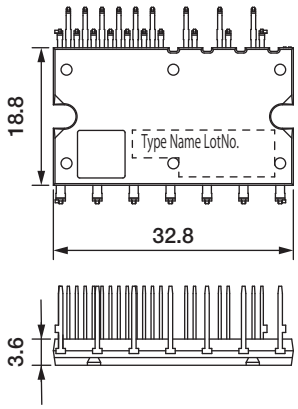

SLIMDIP
Short

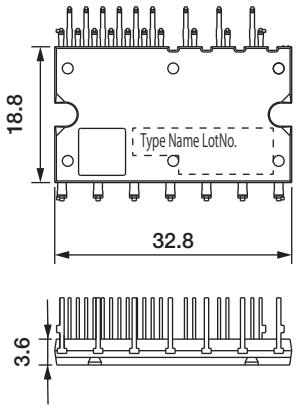

Super mini DIPIPM Ver.6
Long

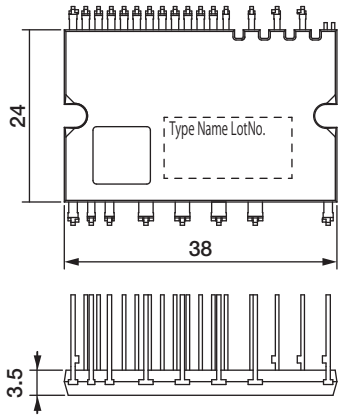

Super mini DIPIPM Ver.7
Long

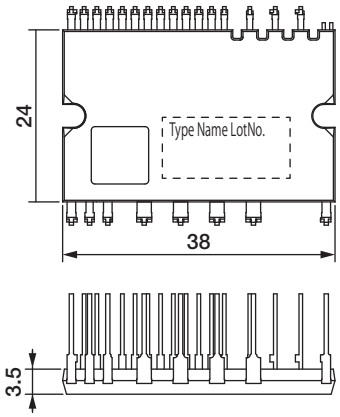

Mini DIPIPM (PSSxxS51F6)

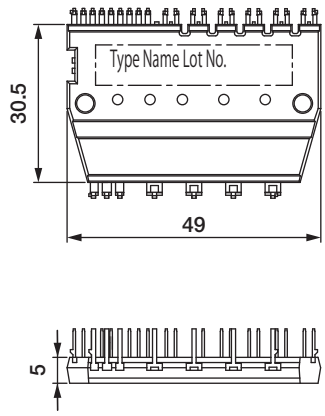

Mini DIPIPM(PSSxxS51F6)
Control side of Zigzag

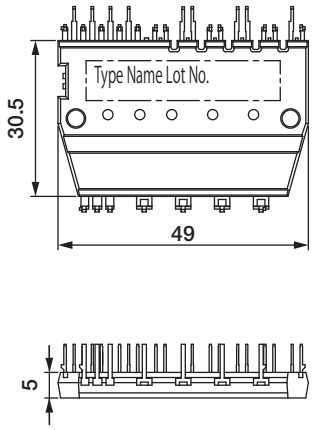

Mini DIPIPM (PSSxxS7xF6)
1200V Mini DIPIPM Ver.7
1200V Mini DIPIPM

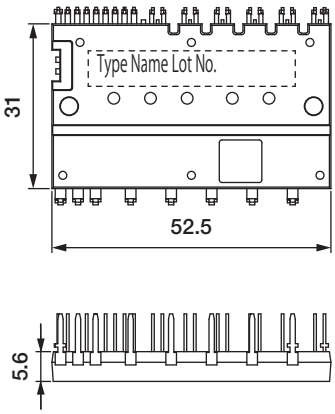

Outline Drawing of DIPIPM

Unit:mm

Large DIPIPM

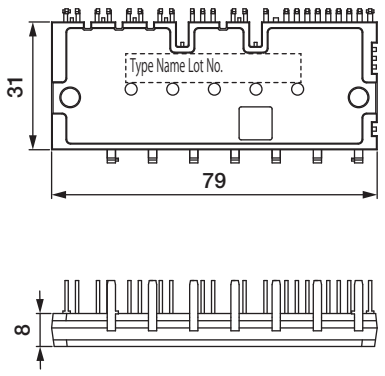

DIPIPM+

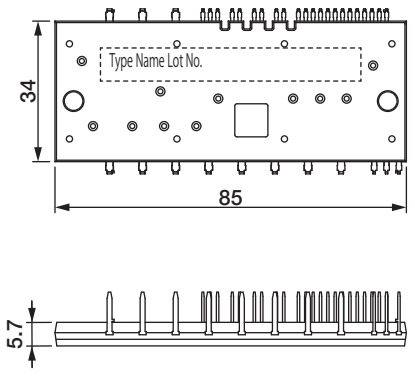

Large DIPIPM+

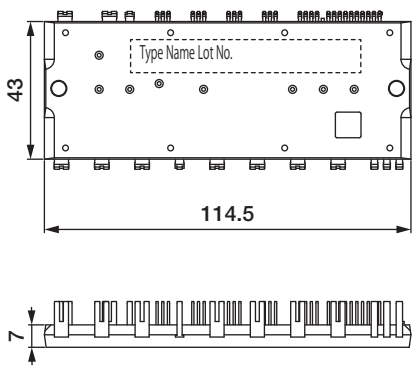

Series , Main Application

Series	Main Application
G1	Motion control/Renewable energy/Power supply
V1	

Data sheet here

Rated Lineup

		Rated current												
		25A	35A	50A	75A	100A	150A	200A	300A	400A	450A	500A	600A	800A
Rated voltage	600V									◆			◆	
	650V			●	●	●	●	●	●		●			
	1200V	●	●	●	●	●	●	◆			◆			

Featured Products

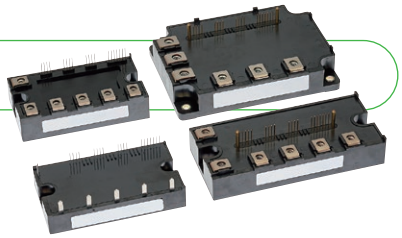

Loaded with built-in functions, contributing to inverters with enhanced energy savings

G1 Series IPM with 7th-generation IGBT

<Main Features>

- Power loss has been reduced with the introduction of the 7th-generation IGBT produced using CSTBT™*1 and a diode incorporating a RFC*2 structure that contributes to reducing the power consumed in inverters
- The new resin-insulated metal baseplate, originally introduced in 7th-generation IGBT modules, eliminates the solder-attached section, increasing the thermal cycle lifetime and improving inverter reliability
- In addition to the built-in functions of the previous product,*3 automatic switching speed control, and error detection function contribute to lowering inverter loss and shortening design time

*1 CSTBT: Mitsubishi Electric's unique IGBT that utilizes the carrier cumulative effect
*2 RFC: Relaxed field cathode
*3 Conventional product: IPM L1-Series
Built-in functions: Supply Undervoltage lock protection (UV)、Short-circuit protection (SC), Over-temperature protection (OT)

■ "A" package main pin shape and layout

For the "A" package 6-in-1 (CG1A) main pin shape, select either solder pin or screw type
For the pin layout, select either straight or L-shaped

Main pin shape

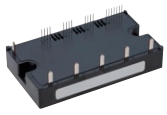

Main pin: Solder pin

Main pin: Screw

Main pin layout

Straight

L-shaped

Matrix of IPM 650V/600V (No.: Number of outline drawing, see page 21)

V_{CES} / Series / I_C	650V					
	G1 Series	Connection	No.	V1 Series	Connection	No.
50A	PM50CG1A065	C	06			
	PM50RG1A065	R	06			
	PM50CG1B065	C	04			
	PM50RG1B065	R	04			
	PM50CG1AL065	C	06			
	PM50CG1AP065	C	03			
	PM50CG1APL065	C	03			
	PM50RG1AP065	R	03			
75A	PM75CG1A065	C	06			
	PM75RG1A065	R	06			
	PM75CG1B065	C	04			
	PM75RG1B065	R	04			
	PM75CG1AL065	C	06			
	PM75CG1AP065	C	03			
	PM75CG1APL065	C	03			
	PM75RG1AP065	R	03			
100A	PM100CG1A065	C	06			
	PM100CG1B065	C	04			
	PM100RG1B065	R	04			
	PM100CG1AL065	C	06			
	PM100CG1AP065	C	03			
	PM100CG1APL065	C	03			
150A	PM150CG1B065	C	04			
	PM150RG1B065	R	04			
200A	PM200CG1B065	C	04			
	PM200RG1B065	R	04			
	PM200CG1C065	C	05			
	PM200RG1C065	R	05			
300A	PM300CG1C065	C	05			
	PM300RG1C065	R	05			
400A				PM400DV1A060	D	01
450A	PM450CG1C065	C	05			
	PM450RG1C065	R	05			
600A				PM600DV1A060	D	01
800A				PM800DV1B060	D	02
IGBT chip	CSTBT*1 Emitter sensor installed Temperature sensor installed			CSTBT*1 Built-in emitter sensor Built-in temperature sensor		
Fault output UV	P-side/N-side			P-side/N-side		
Fault output OT	P-side/N-side			P-side/N-side		
Fault output SC	P-side/N-side			P-side/N-side		
Identification	P-side/N-side			—		
RoHS directive*3	Compliant			Compliant		
Compatibility	—			V Series		
Connection	D  B4 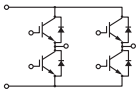 B5 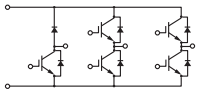 C 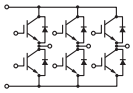 R 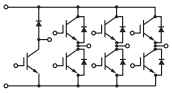					

[Notes] ＊1: Full-gate CSTBT™ ＊2: PCM (Plugged Cell Merged) CSTBT™
＊3: RoHS directive (2011/65/EU and (EU) 2015/863)

[Term] UV: Power supply Under Voltage protection
SC: Short Circuit protection
OT: Over Temperature protection
RoHS: Restriction of hazardous substances in electrical and electronic equipment

Matrix of IPM 1200V (No.: Number of outline drawing, see page 21)

V_{CES} / Series / I_C	1200V					
	G1 Series	Connection	No.	V1 Series	Connection	No.
25A	PM25CG1A120	C	06			
	PM25CG1B120	C	04			
	PM25RG1A120	R	06			
	PM25RG1B120	R	04			
	PM25CG1AL120	C	06			
	PM25CG1AP120	C	03			
	PM25CG1APL120	C	03			
	PM25RG1AP120	R	03			
35A	PM35CG1A120	C	06			
	PM35CG1B120	C	04			
	PM35RG1A120	R	06			
	PM35RG1B120	R	04			
	PM35CG1AL120	C	06			
	PM35CG1AP120	C	03			
	PM35CG1APL120	C	03			
	PM35RG1AP120	R	03			
50A	PM50CG1A120	C	06			
	PM50CG1B120	C	04			
	PM50RG1B120	R	04			
	PM50CG1AL120	C	06			
	PM50CG1AP120	C	03			
	PM50CG1APL120	C	03			
75A	PM75CG1B120	C	04			
	PM75RG1B120	R	04			
100A	PM100CG1B120	C	04			
	PM100CG1C120	C	05			
	PM100RG1B120	R	04			
	PM100RG1C120	R	05			
150A	PM150CG1C120	C	05			
	PM150RG1C120	R	05			
200A	PM200CG1C120	C	05	PM200DV1A120	D	01
	PM200RG1C120	R	05			
300A				PM300DV1A120	D	01
450A				PM450DV1A120	D	01
IGBT chip	CSTBT*1 Emitter sensor installed Temperature sensor installed			CSTBT*1 Built-in current sensor Built-in temperature sensor		
Fault output UV	P-side/N-side			P-side/N-side		
Fault output OT	P-side/N-side			P-side/N-side		
Fault output SC	P-side/N-side			P-side/N-side		
Identification	P-side/N-side			—		
RoHS directive*3	Compliant			Compliant		
Compatibility	—			V Series		
Connection	D  C 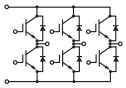 R 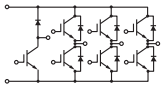					

[Notes] *1: Full-gate CSTBT™ *2: PCM (Plugged Cell Merged) CSTBT™
*3: RoHS directive (2011/65/EU and (EU) 2015/863)

[Term] CSTBT™: Mitsubishi Electric's unique IGBT that makes use of the carrier cumulative effect
UV: Power supply Under Voltage protection
SC: Short Circuit protection
OT: Over Temperature protection
RoHS: Restriction of the use of certain Hazardous Substances in electrical and electronic equipment

Outline Drawing of IPM

Unit:mm

01

PM400,600DV1A060
PM200,300,450DV1A120

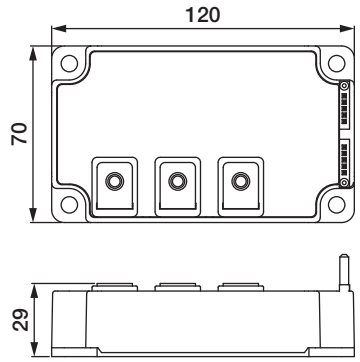

02

PM800DV1B060

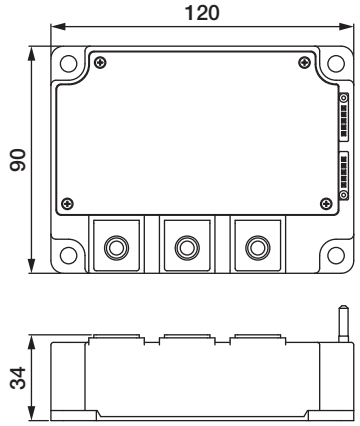

03

PM50,75,100CG1AP/CG1APL065
PM50,75RG1AP065
PM25,35,50CG1AP/CG1APL120
PM25,35RG1AP120

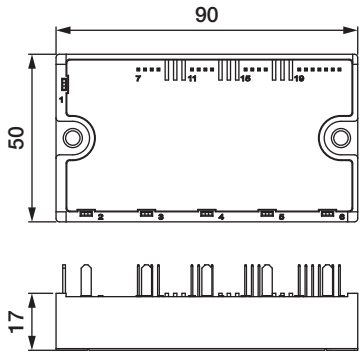

04

PM50,75,100,150,200CG1B/
RG1B065
PM25,35,50,75,100CG1B/
RG1B120

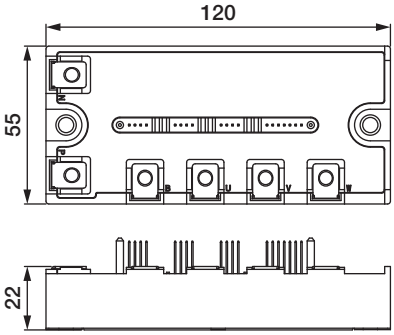

05

PM200,300,450CG1C/
RG1C065
PM100,150,200CG1C/
RG1C120

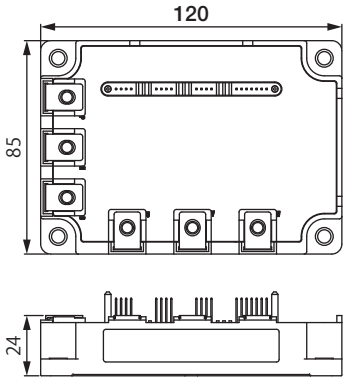

06

PM50,75,100CG1A/CG1AL065
PM50,75RG1A065
PM25,35,50CG1A/CG1AL120
PM25,35RG1A120

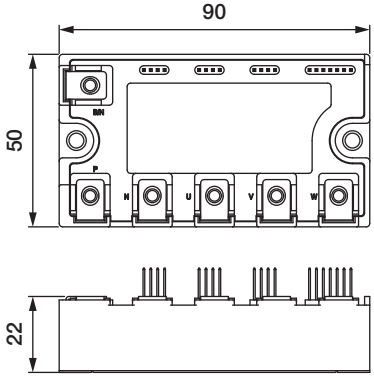

Series , Main Application

Series	Main Application
T	Motion control/Renewable energy /Power supply
T1	
TH	
For 3-level Inverters	
S	

Data sheet here

Rated Lineup

New Products

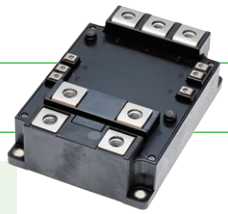

Industrial IGBT module with new standard package "LV100" for high power density inverter

IGBT module T-series (LV100 for industrial)

IGBT module 2in1 type
■Lineup
1200A/2000V
800A/1700V, 800A/1700V(with enhanced FWD), 1200A/1700V
800A/1200V, 1200A/1200V

〈Main Features〉
- Next generation high capacity standard package for industrial use
- Improved ease of use by applying low impedance package
- Reducing the switching loss and optimal for the applications that are used in 1 to 5KHz
- Isolation voltage 4kV

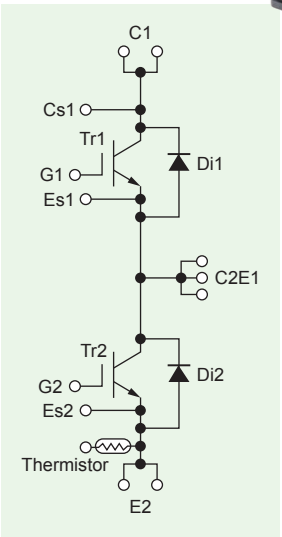

Featured Products

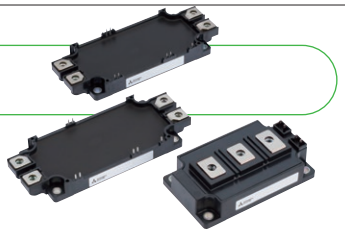

New lineup contributes to simple design downsizing, energy-savings of industrial inverters.

IGBT Module T/T1-Series

<Main Features>
- New modules equipped with three-phase converter, inverter, and brake circuit(CIB), contributes to simplifying design for inverter systems
- CIB modules contribute to compact inverter systems by reducing package size by 36% compared to the Mitsubishi Electric's existing module.(CIB)
- Power loss has been reduced with the introduction of the 7th-generation IGBT produced using CSTBT*2 and a diode incorporating a relaxed field of cathode (RFC) structure
- The new structure introduced eliminates the solder-attached section, increasing the thermal cycle lifetime, which contributes to improving the reliability of inverters
- The introduction of press-fit pins and PC-TIM*1 contribute to simplifying the assembly process for inverters

*1 PC-TIM: Phase change - thermal interface material
*2 CSTBT: Mitsubishi Electric's unique IGBT that makes use of the carrier cumulative effect

◆ Press-fit terminal support(NX)

- Possible to select the control pin shape (soldered terminals/press-fit terminals)
- Solder attachment process eliminated

■Press-fit pin

①Main pin

②Signal pin

■ New structure realizes improved reliability (improved thermal cycle lifetime)

NX package structure comparison
6th-generation IGBT

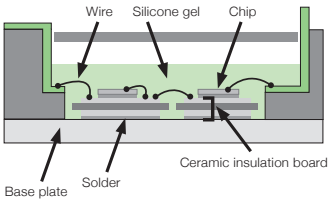

7th-generation IGBT

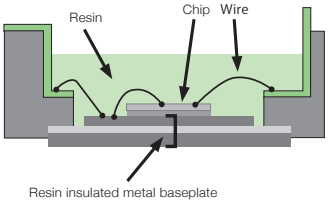

※Adopts SoLid Cover(SLC) Technology

Compared to standard (std) package structure
6th-generation IGBT

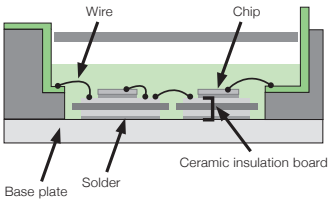

7th-generation IGBT

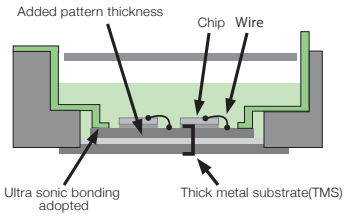

※Standard package is not available for CIB

Featured Products

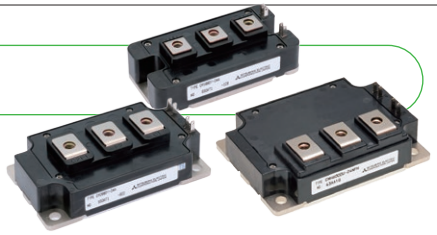

Low switching loss contributes to efficiency improvement of industrial inverters during high-frequency operation.

TH-series IGBT Modules with 7th-generation IGBT for High-frequency switching applications

<Main Features>
- A chip optimized for high-frequency applications fc target 20-60kHz
- High-speed specifications reduce power consumption during high-frequency switching.The loss is reduced by about 30% compared to general specifications*1
- Lineup of 1200V 200A to 600A (2 types of packages are available for 400A)

*1:7th-generation T series with general specifications

■ Package

48 x 94mm
1200V/200A
・CM200DY-24TH

62 x 108mm
1200V/400A
・CM400DY-24TH

80 x 110mm
1200V/400A,600A
・CM400DU-24TH
・CM600DU-24TH

■Product lineup

Type name	Rated Voltage	Rated Current	Connection	External size (D x W)
CM200DY-24TH	1200V	200A	2 in 1	48.0 x 94.0mm
CM400DY-24TH		400A		62.0 x 108.0mm
CM400DU-24TH				80.0 x 110.0mm
CM600DU-24TH		600A		

■Power loss comparison

Note: Example properties of TH-series IGBT(fc=30kHz)

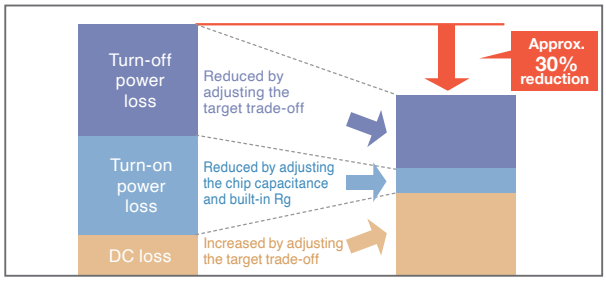

Lineup of IGBT Modules

Matrix of IGBT Modules 650V/600V (No.: Number of outline drawing, see page 27 to 31)

RoHS directive (2011/65/EU, (EU)2015/863) compliant

V_{CES}	650V						600V		
Series / I_C	T/T1-Series NX Type	Connection	No.	T-Series std Type	Connection	No.	NFH-Series	Connection	No.
50A	CM50MXUB-13T CM50MXUB-13T1 CM50MXUBP-13T CM50MXUBP-13T1	M M M M	32 32 36 36						
75A	CM75MXUB-13T CM75MXUB-13T1 CM75MXUBP-13T CM75MXUBP-13T1	M M M M	32 32 36 36						
100A	CM100TX-13T CM100TXP-13T CM100MXUB-13T CM100MXUB-13T1 CM100MXUBP-13T CM100MXUBP-13T1 CM100MXUD-13T CM100MXUD-13T1 CM100MXUDP-13T CM100MXUDP-13T1	T T M M M M M M M M	24 27 32 32 36 36 34 34 38 38	CM100DY-13T	D	19			
150A	CM150TX-13T CM150TXP-13T CM150RX-13T CM150RXP-13T CM150MXUD-13T CM150MXUD-13T1 CM150MXUDP-13T CM150MXUDP-13T1	T T R R M M M M	24 27 25 28 34 34 38 38	CM150DY-13T	D	19			
200A	CM200TX-13T CM200TXP-13T CM200RX-13T CM200RXP-13T	T T R R	24 27 25 28	CM200DY-13T	D	19	CM200DU-12NFH	D	11
300A	CM300DX-13T CM300DXP-13T	D D	17 29	CM300DY-13T	D	20	CM300DU-12NFH	D	12
400A				CM400DY-13T	D	20	CM400DU-12NFH	D	12
450A	CM450DX-13T CM450DXP-13T	D D	17 29						
600A	CM600DX-13T CM600DXP-13T	D D	17 29	CM600DY-13T	D	21	CM600DU-12NFH	D	13
Connection	D  T 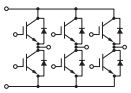 R 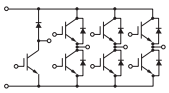 M 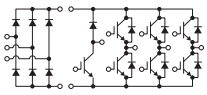								

Matrix of Power Modules for 3-level Inverter (No.: Number of outline drawing, see page 27 to 31)

RoHS directive (2011/65/EU, (EU)2015/863) compliant

V_{CES}/V_{RRM}	1200 V IGBT Module			1700 V IGBT Module			1200 V Diode Module			1700 V Diode Module		
I_C/I_F	T/S-Series std Type	Connection	No.	S-Series std Type	Connection	No.	S-Series std Type	Connection	No.	S-Series std Type	Connection	No.
400A	CM400C1Y-24S	C1	09									
450A	CM450C1Y-24T	C1	21									
500A	CM500C2Y-24S	C2	26									
600A	CM600C1Y-24T	C1	21	CM600HA-34S	H	26				RM600DY-34S	D	22
800A				CM800HA-34S	H	26				RM800DY-34S	D	22
1000A				CM1000HA-34S	H	26						
1400A	CM1400HA-24S	H	26				RM1400HA-24S	H	26			
Connection	IGBT module C1  C2  H  S 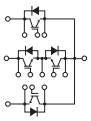						Diode module H  D 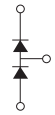					

＊Connection of diode module and IGBT module are different.

★: New Product

Matrix of IGBT Modules 1200V (No.: Number of Outline Drawing, see page 27 to 31)

RoHS directive (2011/65/EU, (EU)2015/863) compliant

V_{CES}	1200V																							
Series / I_C	T-Series LV100 Type			T/T1-Series NX Type			T-Series std Type			TH-Series			S-Series NX Type			S-Series std Type※2			S-Series MPD Type※2		
		Connection	No.		Connection	No.		Connection	No.		Connection	No.		Connection	No.		Connection	No.		Connection	No.
35A				CM35MXUA-24T CM35MXUA-24T1 CM35MXUAP-24T CM35MXUAP-24T1	M M M M	31 31 35 35							CM35MXA-24S	M	03						
50A				CM50MXUA-24T CM50MXUA-24T1 CM50MXUAP-24T CM50MXUAP-24T1	M M M M	31 31 35 35							CM50MXA-24S	M	03						
75A				CM75MXUB-24T CM75MXUB-24T1 CM75MXUBP-24T CM75MXUBP-24T1 CM75MXUC-24T CM75MXUC-24T1 CM75MXUCP-24T CM75MXUCP-24T1	M M M M M M M M	32 32 36 36 33 33 37 37							CM75MXA-24S CM75TX-24S CM75RX-24S	M T R	03 04 01						
100A				CM100TX-24T CM100TXP-24T CM100RX-24T CM100RXP-24T CM100MXUC-24T CM100MXUC-24T1 CM100MXUCP-24T CM100MXUCP-24T1	T T R R M M M M	24 27 25 28 33 33 37 37	CM100DY-24T	D	19				CM100MXA-24S	M	03						
150A				CM150TX-24T CM150TXP-24T CM150RX-24T CM150RXP-24T CM150MXUD-24T CM150MXUD-24T1 CM150MXUDP-24T CM150MXUDP-24T1	T T R R M M M M	24 27 25 28 34 34 38 38	CM150DY-24T	D	19				CM150DX-24S CM150EXS-24S	D E	02 16						
200A				CM200TX-24T CM200TXP-24T	T T	24 27	CM200DY-24T	D	20	CM200DY-24TH	D	06	CM200EXS-24S CM200RXL-24S CM200DX-24S	E R D	16 15 02						
225A				CM225DX-24T CM225DXP-24T CM225DX-24T1 CM225DXP-24T1	D D D D	17 29 17 29															
300A				CM300DX-24T CM300DXP-24T CM300DX-24T1 CM300DXP-24T1	D D D D	17 29 17 29	CM300DY-24T	D	20				CM300EXS-24S	E	16	CM300DY-24S	D	07			
400A										CM400DY-24TH CM400DU-24TH	D D	08 13									
450A				CM450DX-24T CM450DXP-24T CM450DX-24T1 CM450DXP-24T1	D D D D	17 29 17 29	CM450DY-24T	D	21							CM450DY-24S	D	09			
600A				CM600DX-24T CM600DXP-24T CM600DX-24T1 CM600DXP-24T1	D D D D	17 29 17 29	CM600DY-24T	D	21	CM600DU-24TH	D	13	CM600DXL-24S	D	05	CM600DY-24S	D	09			
800A	CM800DW-24T	D	39	CM800DX-24T1 CM800DXP-24T1	D D	17 29										CM800DY-24S	D	10			
900A																			CM900DUC-24S	D	14
1000A				CM1000DX-24T CM1000DXP-24T	D D	18 30							CM1000DXL-24S	D	05						
1200A	CM1200DW-24T	D	39																		
1400A																CM1400HA-24S	H	26	CM1400DUC-24S	D	14

Connection

H 
D 
T 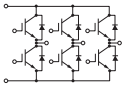
R 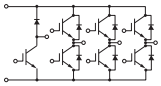
M 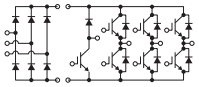
E 
E3 

＊1: A-Series have model namse ending with A, NF-Series have model name ending with NF/NFH
＊2: std Type have model name "CM**DY/HA-24S, MPD Type have model name "CM**DUC-24S"

Lineup of IGBT Modules

Matrix of IGBT Modules 1700V(No.: Number of Outline Drawing, see page 27 to 31)

RoHS directive (2011/65/EU, (EU)2015/863) compliant

V_{CES}	1700V											
Series / I_C	T-Series LV100 Type	Connection	No.	T-Series NX Type	Connection	No.	T-Series std Type	Connection	No.	S-Series std Type	Connection	No.
75A							CM75DY-34T	D	19			
100A				CM100TX-34T CM100TXP-34T	T T	24 27	CM100DY-34T	D	19			
150A				CM150TX-34T CM150TXP-34T	T T	24 27	CM150DY-34T	D	20			
200A							CM200DY-34T	D	20			
225A				CM225DX-34T CM225DXP-34T	D D	17 29						
300A				CM300DX-34T CM300DXP-34T	D D	17 29	CM300DY-34T	D	21			
400A							CM400DY-34T	D	21			
450A				CM450DX-34T CM450DXP-34T	D D	17 29						
500A												
600A				CM600DX-34T CM600DXP-34T	D D	17 29				CM600HA-34S	H	26
800A	CM800DW-34T CM800DW-34TA	D D	39 39							CM800HA-34S	H	26
1000A										CM1000HA-34S	H	26
1200A	CM1200DW-34T	D	39									

Connection

H 

D 

T 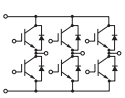

R 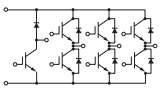

M 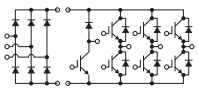

E 

Matrix of IGBT Modules 2000V(No.: Number of Outline Drawing, see page 27 to 31)

RoHS directive (2011/65/EU, (EU)2015/863) compliant

V_{CES}	2000V					
Series / I_C	T-Series LV100 Type	Connection	No.	T-Series std Type	Connection	No.
200A				CM200DY-40TA	D	21
400A				CM400DY-40T CM400DY-40TA	D D	23 21
1200A	CM1200DW-40T	D	39			

Connection

D 

Outline Drawing of IGBT Modules

Unit:mm

01 CM75RX-24S

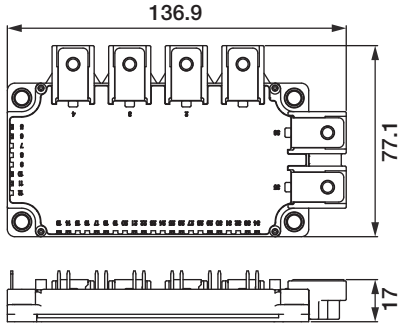

02 CM150,200DX-24S

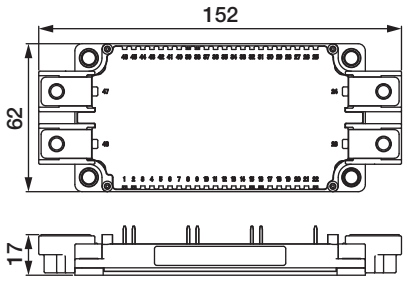

03 CM35,50,75,100MXA-24S

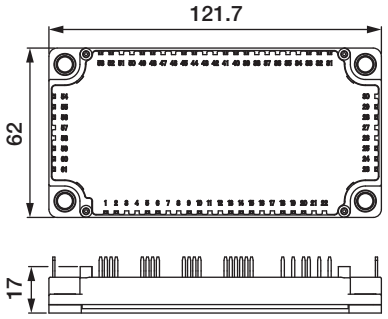

04 CM75TX-24S

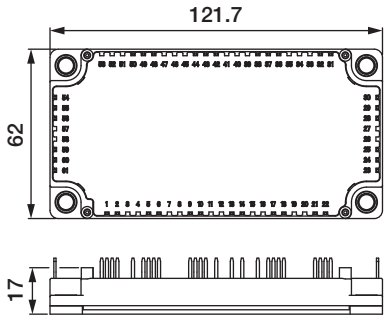

05 CM600,1000DXL-24S

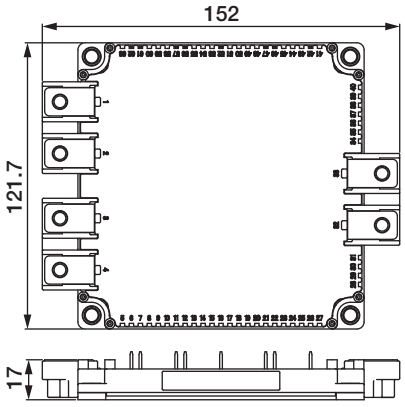

06 CM200DY-24TH

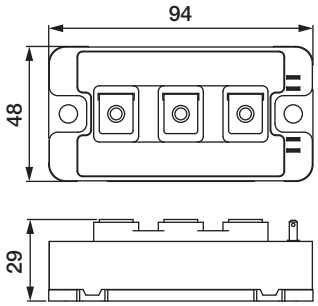

07 CM300DY-24S

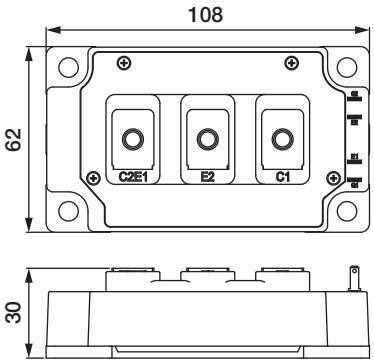

08 CM400DY-24TH

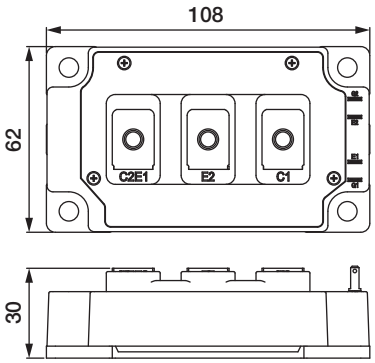

09 CM400C1Y-24S CM450DY-24S CM600DY-24S

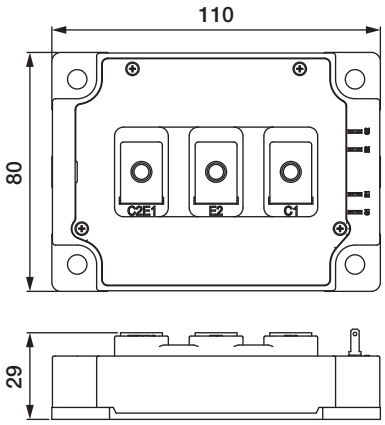

Outline Drawing of IGBT Modules

Unit:mm

10 CM800DY-24S

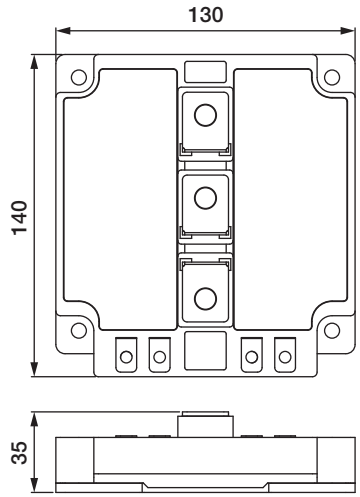

11 CM200DU-12NFH

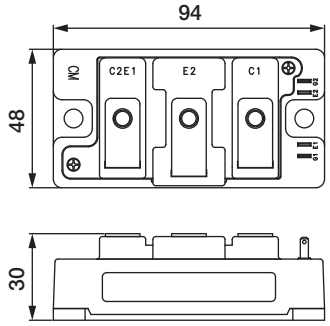

12 CM300,400DU-12NFH

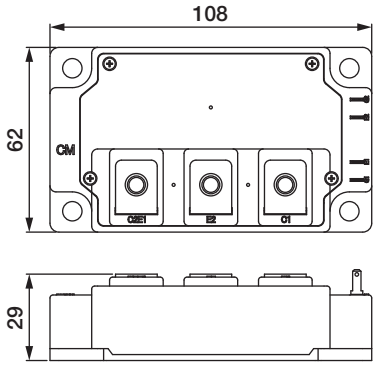

13 CM600DU-12NFH CM400,600DU-24TH

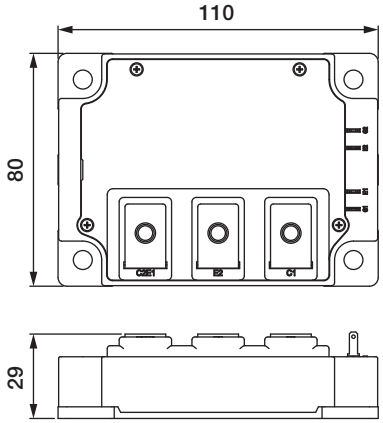

14 CM900,1400DUC-24S

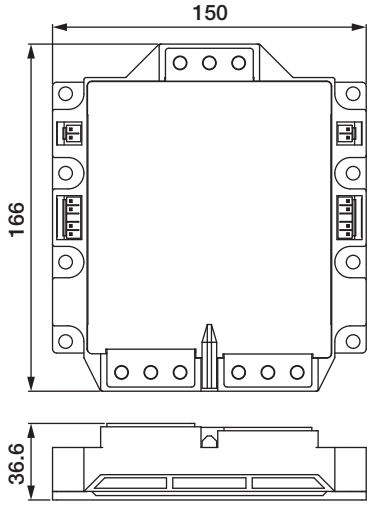

15 CM200RXL-24S

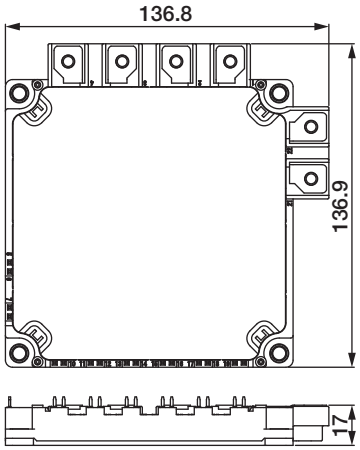

16 CM150EXS-24S CM200EXS-24S CM300EXS-24S

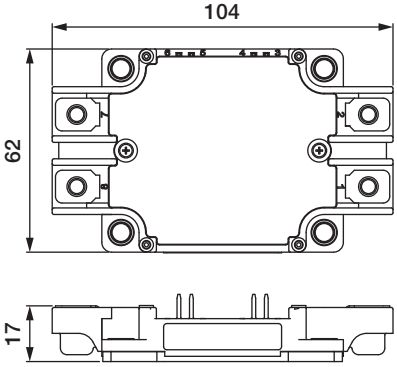

17 CM300,450,600DX-13T CM225,300,450,600DX-24T CM225,300,450,600,800DX-24T1 CM225,300,450DX,600DX-34T

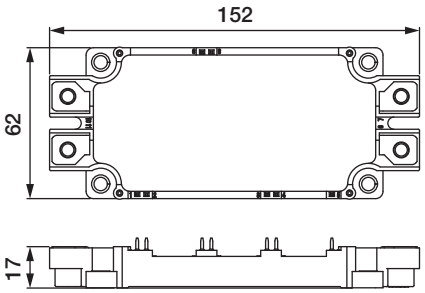

18 CM1000DX-24T

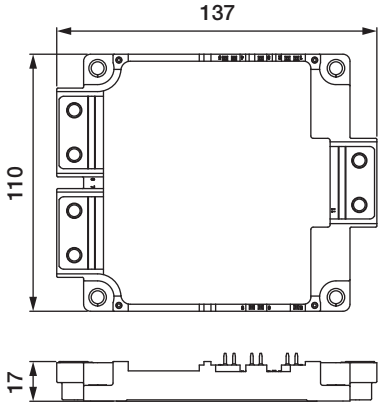

Outline Drawing of IGBT Modules

Unit:mm

19

CM100,150,200DY-13T
CM100,150DY-24T
CM75,100DY-34T

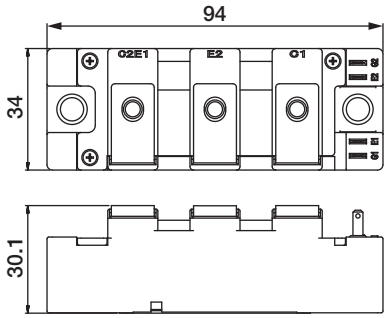

20

CM300,400DY-13T
CM200,300DY-24T
CM150,200DY-34T

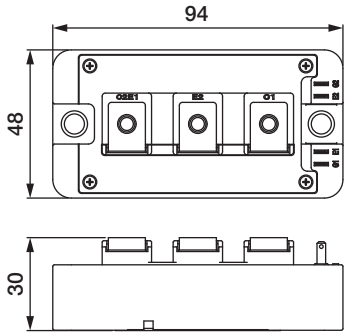

21

CM600DY-13T
CM450,600DY-24T
CM450,600C1Y-24T
CM300,400DY-34T
CM200DY-40TA
CM400DY-40TA

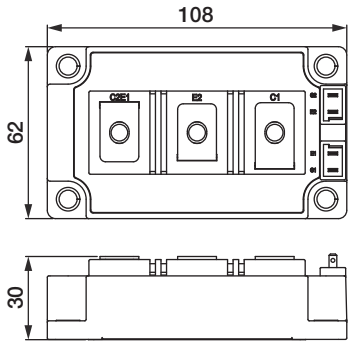

22

RM600,800DY-34S

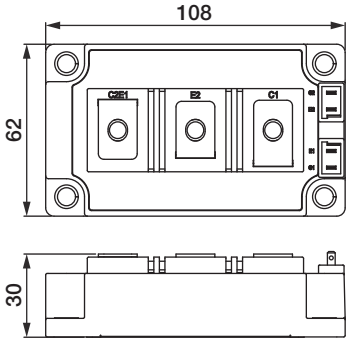

23

CM400DY-40T

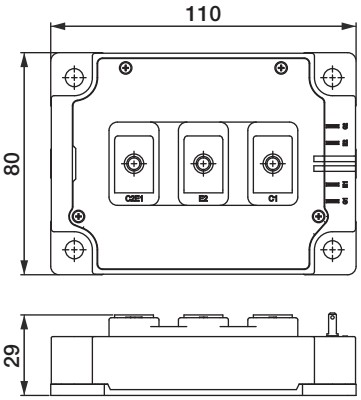

24

CM100,150,200TX-13T
CM100,150,200TX-24T
CM100,150TX-34T

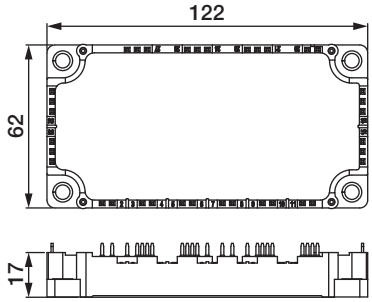

25

CM150,200RX-13T
CM100,150RX-24T

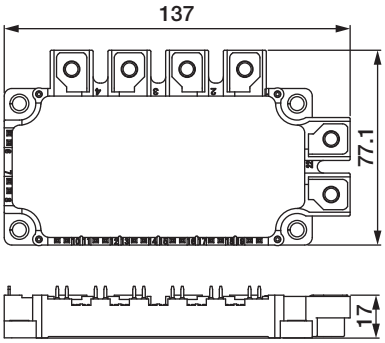

26

CM500C2Y-24S
CM1400HA-24S
CM600,800,1000HA-34S
RM1400HA-24S

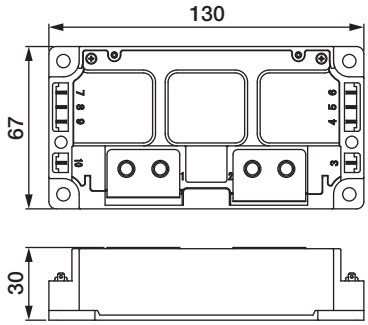

27

CM100,150,200TXP-13T
CM100,150,200TXP-24T
CM100,150TXP-34T

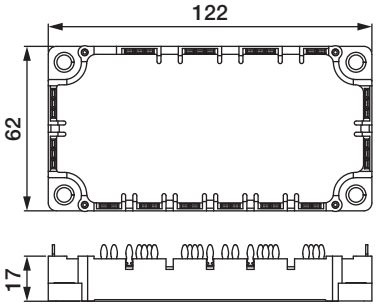

Outline Drawing of IGBT Modules

Unit:mm

28

CM150,200RXP-13T
CM100,150RXP-24T

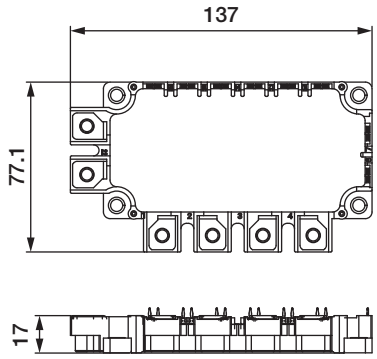

29

CM300,450,600DXP-13T
CM225,300,450,600DXP-24T
CM225,300,450,600,800DXP-24T1
CM225,300,450,600DXP-34T

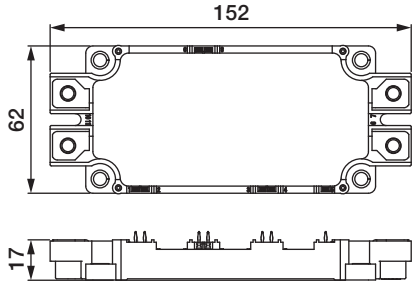

30

CM1000DXP-24T

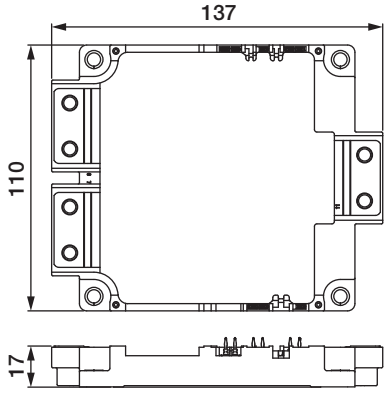

31

CM35,50MXUA-24T/24T1

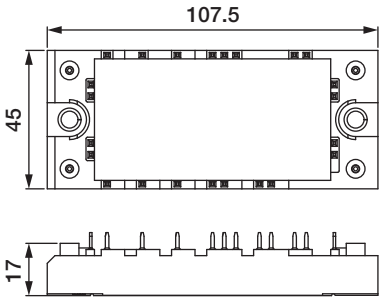

32

CM50,75,100MXUB-13T/13T1
CM75MXUB-24T/24T1

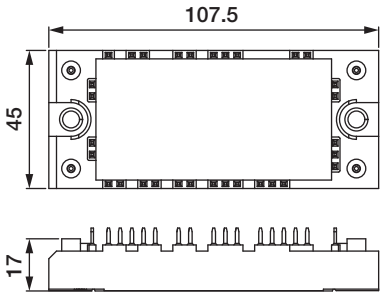

33

CM75,100MXUC-24T/24T1

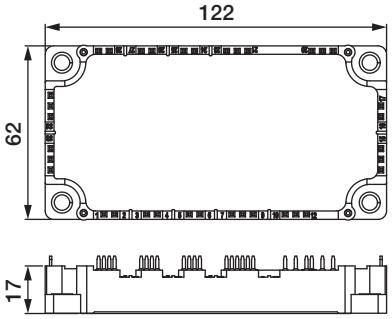

34

CM100/150MXUD-13T/T1
CM150MXUD-24T/T1

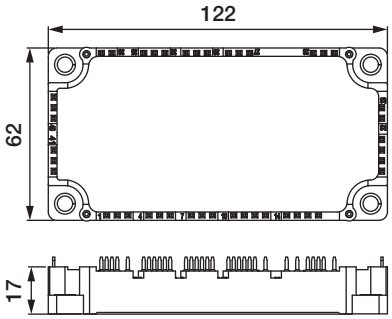

35

CM35/50MXUAP-24T/T1

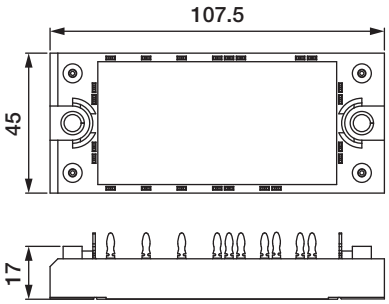

36

CM50/75/100MXUBP-13T/T1
CM75MXUBP-24T/T1

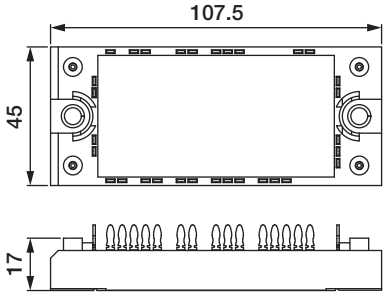

Outline Drawing of IGBT Modules

Unit:mm

37

CM75/100MXUCP-24T/T1

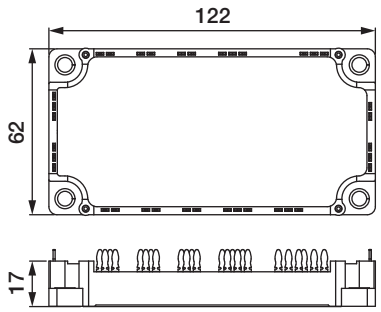

38

CM100/150MXUDP-13T/T1
CM150MXUDP-24T/T1

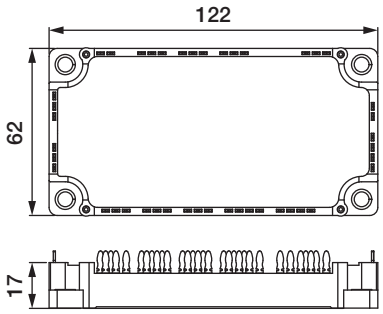

39

CM800,1200DW-24T
CM800,1200DW-34T
CM800DW-34TA
CM1200DW-40T

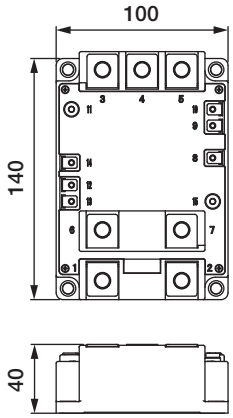

Series , Main Application

Series	Main Application
X	Traction/Power transmission/Motion control
R	
S	
N	
H	

Data sheet here

Rated Lineup

New Products

X Series HVIGBT Modules std type

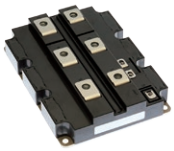

Existing compatible package: standard type contributes to smaller, higher-capacity inverter systems by expanding lineup

<Main Features>
- Power loss reduced by incorporating 7th-generation IGBT and RFC*1 diode
- Compared to the existing CM900HC-90H and CM1350HC-90X, the new models' rated output currents are 50% greater but external dimensions are the same.
- Compared to existing CM900HC-90H, new CM900HC-90X, etc. are 33% smaller but achieve the same voltage and current ratings.
- Optimal package internal structure realizes improved heat dissipation, humidity resistance and flame retardance, increasing product life

*1 RFC : Relaxed field of cathode

Product lineup

std type	1.7kV	3.3kV	4.5kV	6.5kV
	2400A	1200A	900A 1000A	600A
	2400A	1200A 1800A	900A 1350A 1500A	600A 900A 1000A

X Series HVIGBT Modules dual type

New common frame package: dual type class-leading current density contributes to increased power output in inverter systems

<Main Features>
- Power loss reduced by incorporating 7th-generation IGBT and RFC *1 diode
- Industry's highest 3.3kV/600A Si module power density of 8.57A/cm^2 *2 contributes to increased power output and efficiency
- Terminal layout optimized for easy paralleling and flexible inverter configurations and capacities
- New package structure offers extra reliability

*2 As of Dec. 17, 2020 based on Mitsubishi Electric research

Product lineup

LV100	1.7kV	3.3kV
	1200A	450A 600A

HV100	3.3kV	4.5kV
	450A 600A	450A

Lineup of HVIGBT Modules

Series Matrix of HVIGBT(No.: Number of Outline Drawing, see page 35)

V_{CES} / I_C	1700V X-Series	Connection	Type	No.	1700V S-Series N-Series	Connection	Type	No.	1700V H-Series	Connection	Type	No.
400A												
450A												
600A									CM600DY-34H CM600E2Y-34H	D1 E2	B2 B2	01 01
800A					CM800DZB-34N	D1	C2	-	CM800DZ-34H	D1	C2	-
1000A												
1200A	CM1200DA-34X	D2	A	07	CM1200HCB-34N CM1200DC-34N CM1200E4C-34N CM1200DC-34S CMH1200DC-34S	H D1 E4 D1 D1	C2 C2 C2 C2 C2	- - - - 01	CM1200HC-34H	H	C2	-
1500A												
1600A									CM1600HC-34H	H	C2	-
1800A					CM1800HC-34N CM1800HCB-34N	H H	C2 C2	- -	CM1800HC-34H	H	C2	-
2400A	CM2400HC-34X CM2400HCB-34X	H H	C1 C1	02 03	CM2400HC-34N CM2400HCB-34N	H H	C2 C2	- -	CM2400HC-34H	H	C2	03

V_{CES} / I_C	3300V X-Series	Connection	Type	No.	3300V R-Series	Connection	Type	No.	3300V H-Series	Connection	Type	No.
400A									CM400HG-66H CM400DY-66H	H D1	G B1	- 06
450A	CM450DA-66X CM450DE-66X	D2 D2	A E	07 08								
600A	CM600DA-66X CM600DE-66X CM600E1A-66X*	D2 D2 E1	A E A	07 08 07								
800A									CM800HC-66H CM800E4C-66H CM800E6C-66H	H E4 E2	C1 C1 C1	- - -
1000A					CM1000HC-66R CM1000E4C-66R	H E4	C1 C1	- -				
1200A	CM1200HC-66X CM1200HCB-66X	H H	C1 C1	02 03					CM1200HG-66H CM1200HC-66H	H H	C1 C1	- -
1500A					CM1500HC-66R	H	C1	-				
1600A												
1800A	CM1800HC-66X CM1800HG-66X	H H	C1 G	03 04								
2400A												

Connection

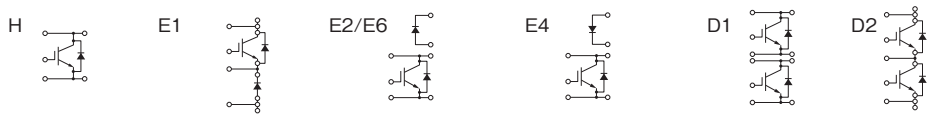

[Type]
A:Al base plate 6kV Isolation
B1:Cu base plate / 6kV Isolation
B2:Cu base plate / 4kV Isolation
C1:AlSiC base plate / 6kV Isolation
C2:AlSiC base plate / 4kV Isolation
G:AlSiC base plate 10kV Isolation
E:Al base plate 10kV Isolation

★: New Product

The outline drawing is written the figure of principal part numbers that have a common dimension.

Non-recommended : Please contact to the sales offices.

Evolution of HVIGBT Module Series

1.7kV: H Series (std type) → N Series (std type) → S Series (std type) → X Series (std type, dual type)

2.5kV: H Series (std type)

3.3kV, 4.5kV, 6.5kV: H Series (std type) → R Series (std type) → X Series (std type, dual type)

Type Name Definition of IGBT Modules

CM 1800 H C -66 X

- X: Series name
- -66: Voltage class
- C: Outline drawing and other specifications
- H: Connection type
- 1800: Rating current
- CM: IGBT, RM: DIODE, PM: IPM

Lineup of HVIGBT Modules

Series Matrix of HVIGBT (No.: Number of Outline Drawing, see page 35)

V_{CES} / I_C	4500V												6500V							
	X-Series				R-Series				H-Series				X-Series				H-Series			
	Connection	Type	No.		Connection	Type	No.		Connection	Type	No.		Connection	Type	No.		Connection	Type	No.	
200A																	CM200HG-130H	H	G	-
400A																	CM400HG-130H CM400E2G-130H CM400E4G-130H	H E2 E4	G G G	- - -
450A	CM450DE-90X**	D2	E	08																
600A									CM600HG-90H	H	G	05	CM600HG-130X	H	G	05	CM600HG-130H	H	G	-
800A					CM800HC-90R CM800HG-90R	H H	C1 G	02 05												
900A	CM900HC-90X CM900HG-90X CM900E2G-90X	H H E2	C1 G G	02 05 04					CM900HC-90H CM900HG-90H	H H	C1 G	- -	CM900HG-130X	H	G	04				
1000A	CM1000HG-90X	H	G	05									CM1000HG-130XA	H	G	04				
1200A					CM1200HC-90RA CM1200HG-90R	H H	C1 G	- -												
1350A	CM1350HC-90X CM1350HG-90X	H H	C1 G	03 04																
1500A	CM1500HC-90XA CM1500HG-90X	H H	C1 G	03 04																

Connection

H 

E2 

E4 

D2 

[Type]
A:Al base plate 6kV Isolation
B1:Cu base plate / 6kV Isolation
B2:Cu base plate / 4kV Isolation
C1:AlSiC base plate / 6kV Isolation
C2:AlSiC base plate / 4kV Isolation
G:AlSiC base plate 10kV Isolation
E : Al base plate 10kV Isolation

★★: Under Development
The outline drawing is written the figure of principal part numbers that have a common dimension.
Non-recommended : Please contact to the sales offices.

Outline Drawing of HVIGBT Modules

Unit:mm

01
CMH1200DC-34S
CM600DY/E2Y-34H

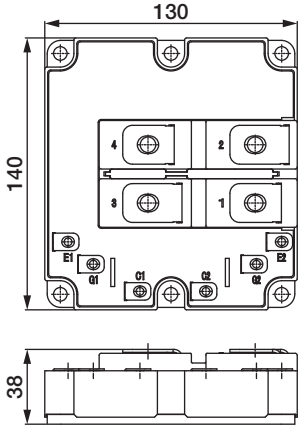

02
CM2400HC-34X
CM1200HC-66X
CM900HC-90X
etc.

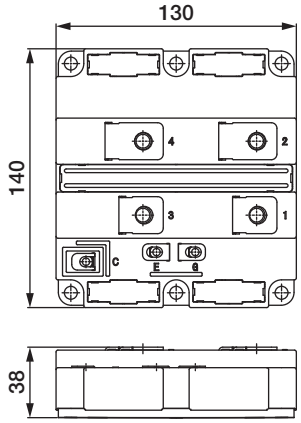

03
CM2400HCB-34X, CM1200HCB-66X,
CM1800HC-66X, CM1350HC-90X,
CM1500HC-90XA
etc.

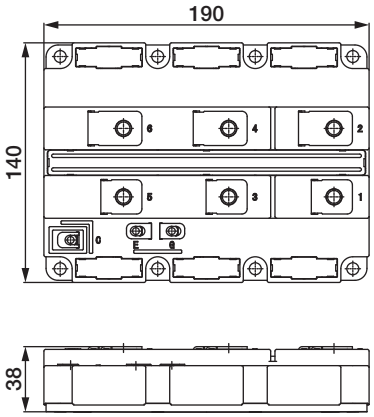

04
CM1800HG-66X, CM900E2G-90X
CM1350HG-90X, CM1500HG-90X
CM900HG-130X, CM1000HG-130XA
etc.

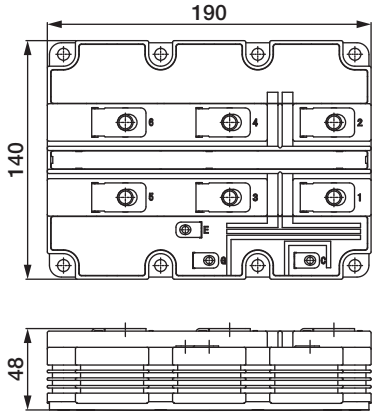

05
CM900, 1000HG-90X
CM800HG-90R
CM600HG-90H/130X

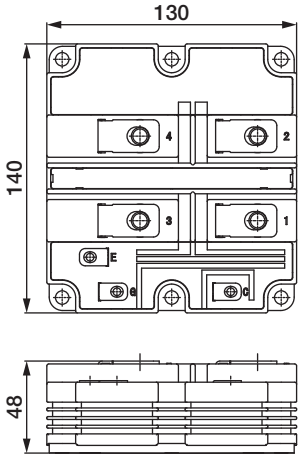

06
CM400DY-66H

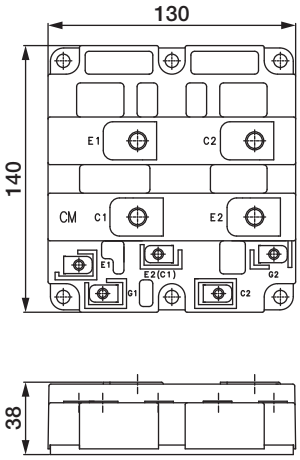

07
CM1200DA-34X
CM450DA-66X, CM600DA-66X,
CM600E1A-66X

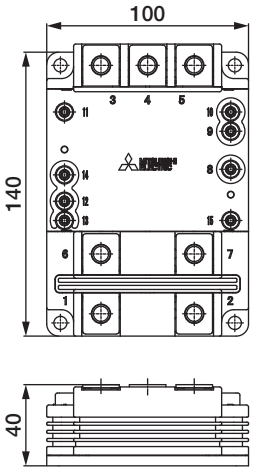

08
CM450DE-66X, CM600DE-66X
CM450DE-90X

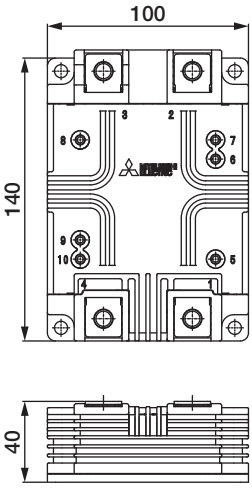

HVDIODE Modules

Series , Main Application

Series	Main Application
HVDIODE Modules	Traction/Power transmission/Motion control

Data sheet here

Rated Lineup

		Rated current										
		300A	400A	450A	600A	750A	800A	900A	1000A	1200A	1500A	1800A
Rated voltage	1700V									●		●
	3300V		●		●					●		
	4500V			●			●				●	
	6500V	●		●					●			

Series Matrix of HVDIODE Modules (No.: Number of outline drawing, see page 37)

V_{PRM} / I_F	1700V	Connection	Type	No.	3300V	Connection	Type	No.	4500V	Connection	Type	No.	6500V	Connection	Type	No.
300A													RM300DG-130X★	D	G	09
400A					RM400DG-66S RM400DY-66S	D D	G B	- -								
450A									RM450DG-90X	D	G	09	RM450DG-130X★	D	G	09
600A					RM600DY-66S RM600DC-66X	D D	B C	- 10					RM600DG-130S RM600DG-130X★	D D	G G	09 09
750A									RM750DC-90X★★	D	C	10				
800A									RM800DG-90F	D	G	09				
900A									RM900HC-90S RM900DB-90S RM900DG-90X★	H D D	C B G	- 10 09				
1000A					RM1000DC-66F	D	C	-					RM1000DG-130XA	D	G	09
1200A	RM1200DB-34S	D	B	-	RM1200DG-66S RM1200HE-66S RM1200DB-66S RM1200DC-66X★ RM1200DG-66X	D H D D D	G C B C G	- - - 10 09	RM1200DG-90F	D	G	09				
1500A					RM1500HE-66F RM1500DC-66F	H D	C C	- -	RM1500DG-90X★	D	G	09				
1800A	RM1800HE-34S	H	C	-												
Connection	H  D 															

[Type]
B : Cu base plate 6kV Isolation
C : AlSiC base plate 6kV Isolation
G : AlSiC base plate 10kV Isolation

★: New Product ★★: Under Development
The outline drawing is written the figure of principal part numbers that have a common dimension.
Non-recommended : Please contact to the sales offices.

Evolution of HVDIODE Module Series

1.7kV: S Series → X Series

3.3kV / 4.5kV / 6.5kV: S Series → F Series → X Series

Type Name Definition of IGBT Modules

RM 1200 D G -66 X

- X: Series name
- -66: Voltage class
- G: Outline drawing and other specifications
- D: Connection type
- 1200: Rating current
- RM: CM: IGBT, RM: DIODE, PM: IPM

Outline Drawing of HVDIODE Modules

Unit:mm

09

RM1200DG-66X
RM450/900/1500DG-90X
RM300/450/600DG-130X
RM1000DG-130XA
etc.

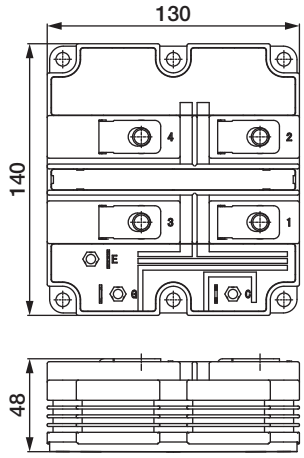

10

RM600DC-66X, RM1200DC-66X
RM750DC-90X
RM1000/1500DC-66F
RM400/600DY-66S
RM1200DB-66S, RM900DB-90S

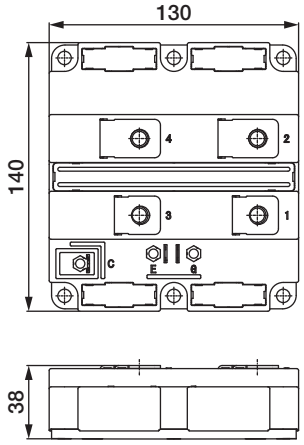

Lineup of MOSFET Modules

Series Matrix of MOSFET Modules

RoHS directive (2011/65/EU, (EU)2015/863) compliant

V_{DSS} / I_D	75V	Connection	100V	Connection	150V	Connection
100A	FM200TU-07A	T	FM200TU-2A	T	FM200TU-3A	T
200A	FM400TU-07A	T	FM400TU-2A	T	FM400TU-3A	T
300A	FM600TU-07A	T	FM600TU-2A	T	FM600TU-3A	T

Connection

T

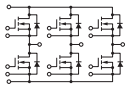

Outline Drawing of MOSFET Modules

Unit:mm

FM200TU-07A, -2A, -3A
FM400TU-07A, -2A, -3A
FM600TU-07A, -2A, -3A

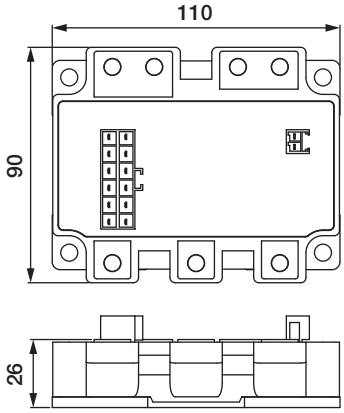

Data sheet here

Series , Main Application

Series	Main Application
J1	xEV

Rated Lineup

		Rated current	
		600A	700A
Rated voltage	650V		

Featured Products

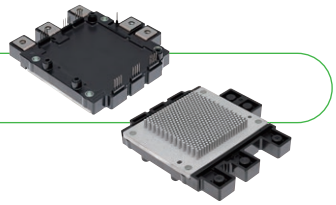

Package with 6-in-1 connection and integrated water-cooled fin contributes to more compact, high-power

J1 Series power Modules for xEV

CT600C1A060-A, CT700CJ1A060-A

<Main Features>
- Integrated direct water-cooling structure with cooling fins and 6-in-1 connection contribute to more compact inverters for xEV
- Direct lead bonding (DLB) structure ensures high reliability
- Loss further reduced by incorporating 7th-generation IGBT built with a CSTBT™* structure
- On-chip current sensor that enables high-speed current-cutoff protection is installed
- Completely lead-free, confirms to RoHS directive (2011/65/EU)
- Suitable for a variety of electric and hybrid vehicle inverters

*CSTBT: Mitsubishi Electric's unique IGBT that utillizes the carrier cumulative effect.

Block Diagram

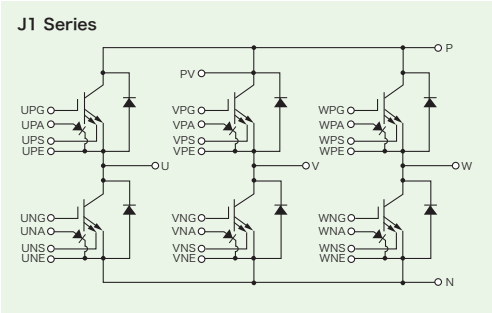

Features

Common

- Long power/temperature cycle life
- High-precision on-chip temperrature sensor
- High traceability in managing materials/components for each product throughout the entire production process
- Package structure compliant with the End-of-Life-Vehicles Directive, regulations relating to substances of enviromental concern

Matrix of 650V Power Modules

V_{CES}	650V		
Series / I_C	J1 Series		
	Power Module with pin fin	Connection	No.
300A	–	–	–
600A	CT600CJ1A060-A	C	01
700A	CT700CJ1A060-A	C	01
Connection	C 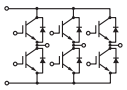		

Type Name Definition of Power Modules for xEV

CT 600 C J1A 060

- Voltage class
- Series name and structure
- Connection type
- Rating current class
- CT: IGBT

Outline Drawing of Power Modules for xEV

Unit:mm

01

CT600CJ1A060-A
CT700CJ1A060-A

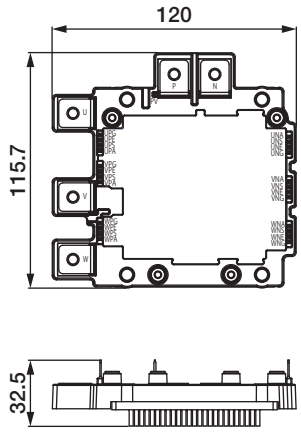

MEMO

MEMO

Mitsubishi Electric Semiconductors & Devices Website

www.MitsubishiElectric.com/semiconductors/

Keep safety first in your circuit designs!

- Mitsubishi Electric Corporation puts the maximum effort into making semiconductor products better and more reliable, but there is always the possibility that trouble may occur with them. Trouble with semiconductors may lead to personal injury, fire or property damage. Remember to give due consideration to safety when making your circuit designs, with appropriate measures such as (i) placement of substitutive, auxiliary circuits, (ii) use of non-flammable material or (iii) prevention against any malfunction or mishap.

Notes regarding these materials

- These materials are intended as a reference to assist our customers in the selection of the Mitsubishi Electric Semiconductor product best suited to the customer's application; they do not convey any license under any intellectual property rights, or any other rights, belonging to Mitsubishi Electric Corporation or a third party.
- Mitsubishi Electric Corporation assumes no responsibility for any damage, or infringement of any third-party's rights, originating in the use of any product data, diagrams, charts, programs, algorithms, or circuit application examples contained in these materials.
- All information contained in these materials, including product data, diagrams, charts, programs and algorithms represents information on products at the time of publication of these materials, and are subject to change by Mitsubishi Electric Corporation without notice due to product improvements or other reasons. It is therefore recommended that customers contact Mitsubishi Electric Corporation or an authorized Mitsubishi Electric Semiconductor product distributor for the latest product information before purchasing a product listed herein.
  The information described here may contain technical inaccuracies or typographical errors. Mitsubishi Electric Corporation assumes no responsibility for any damage, liability, or other loss rising from these inaccuracies or errors.
  Please also pay attention to information published by Mitsubishi Electric Corporation by various means, including the Mitsubishi Electric Semiconductor home page (http://www.MitsubishiElectric.com/semiconductor/).
- When using any or all of the information contained in these materials, including product data, diagrams, charts, programs, and algorithms, please be sure to evaluate all information as a total system before making a final decision on the applicability of the information and products. Mitsubishi Electric Corporation assumes no responsibility for any damage, liability or other loss resulting from the information contained herein.
- Mitsubishi Electric Corporation semiconductors are not designed or manufactured for use in a device or system that is used under circumstances in which human life is potentially at stake. Please contact Mitsubishi Electric Corporation or an authorized Mitsubishi Semiconductor product distributor when considering the use of a product contained herein for any specific purposes, such as apparatus or systems for transportation, vehicular, medical, aerospace, nuclear, or undersea repeater use.
- The prior written approval of Mitsubishi Electric Corporation is necessary to reprint or reproduce in whole or in part these materials.
- If these products or technologies are subject to the Japanese export control restrictions, they must be exported under a license from the Japanese government and cannot be imported into a country other than the approved destination.
  Any diversion or reexport contrary to the export control laws and regulations of Japan and/or the country of destination is prohibited.
- Please contact Mitsubishi Electric Corporation or an authorized Mitsubishi Semiconductor product distributor for further details on these materials or the products contained therein.

MITSUBISHI ELECTRIC CORPORATION
HEAD OFFICE: TOKYO BLDG., 2-7-3, MARUNOUCHI, CHIYODA-KU, TOKYO 100-8310, JAPAN
www.MitsubishiElectric.com

Revised publication, effective Oct. 2023.
Superseding publication of H-CT575-J Jun. 2023.
Specifications subject to change without notice.

H-CT575-K FU-2310 Printed in Japan <IP>