MITSUBISHI ELECTRIC

*Changes for the Better*

Numerical Control (CNC)

# Programming Manual (Lathe System)

## M800/M80/E80/C80 Series

IB-1501275(ENG)-Q

# Introduction

This manual describes the information for programming on Mitsubishi Electric CNC.
Improper handling can cause unexpected malfunctions. To use this device correctly, be sure to read this manual before use.

Supported models of this manual are as follows:

| Supported models | Details |
|---|---|
| M800W Series | M850W, M830W |
| M800S Series | M850S, M830S |
| M80W Series | M80W |
| M80 Series | M80 TypeA, M80 TypeB |
| E80 Series | E80 TypeA, E80 TypeB |
| C80 Series | C80 |

Abbreviations for model names used in this manual are as follows:

| Abbreviations | Supported models |
|---|---|
| M800, M800 Series | M800W Series/M800S Series |
| M80, M80 Series | M80 Series/M80W Series |
| M800/M80, M800/M80 Series | M800W Series/M800S Series/M80W Series/M80 Series |
| M8, M8 Series | M800W Series/M800S Series/M80W Series/M80 Series/E80 Series |

To safely use this CNC unit, thoroughly study the "Precautions for Safety" before use.
Be sure to keep this manual on hand so that users can refer to it at any time.
Also refer to the manuals on "Manual List" as necessary.

■Notes on reading this manual

(1) The description concerning "signals" in this manual refers to information transmission between a machine and PLC or between CNC and PLC. The method on controlling the signals (ON/OFF) differs depending on the machine. Refer to the manual issued by the machine tool builder (MTB).

(2) Some parameters can be used by end-users and some parameters are set by the MTB according to the specifications. End-users may not be able to set or change some of the parameters described as "... can be set with the parameter #XXXX" in this manual. Confirm the specifications for your machine with the manual issued by the MTB.

■Details described in this manual

・In this manual, the following abbreviations might be used.
L system: Lathe system
M system: Machining center system
MTB: Machine tool builder

# Manual List

Manuals related to M800/M80/E80/C80 Series are listed as follows.
These manuals are written on the assumption that all optional functions are added to the targeted model.
Some functions or screens may not be available depending on the machine or specifications set by MTB. (Confirm the specifications before use.)
The manuals issued by MTB take precedence over these manuals.

| Manual | IB No. | Purpose and Contents |
|---|---|---|
| M800/M80/E80 Series<br>Instruction Manual | IB-1501274 | • Operation guide for NC<br>• Explanation for screen operation, etc. |
| C80 Series<br>Instruction Manual | IB-1501453 | • Operation guide for NC<br>• Explanation for screen operation, etc. |
| M800/M80/E80/C80 Series<br>Programming Manual<br>(Lathe System) (1/2) | IB-1501275 | • G code programming for lathe system<br>• Basic functions, etc. |
| M800/M80/E80/C80 Series<br>Programming Manual<br>(Lathe System) (2/2) | IB-1501276 | • G code programming for lathe system<br>• Functions for multi-part system, high-accuracy function, etc. |
| M800/M80/E80/C80 Series<br>Programming Manual<br>(Machining Center System) (1/2) | IB-1501277 | • G code programming for machining center system<br>• Basic functions, etc. |
| M800/M80/E80/C80 Series<br>Programming Manual<br>(Machining Center System) (2/2) | IB-1501278 | • G code programming for machining center system<br>• Functions for multi-part system, high-accuracy function, etc. |
| M800/M80/E80 Series<br>Alarm/Parameter Manual | IB-1501279 | • Alarms<br>• Parameters |
| C80 Series<br>Alarm/Parameter Manual | IB-1501560 | • Alarms<br>• Parameters |

Manuals for MTBs (NC)

| Manual | IB No. | Purpose and Contents |
|---|---|---|
| M800/M80/E80/C80 Series<br>Specifications Manual (Function) | IB-1501505 | • Model selection<br>• Outline of various functions |
| M800/M80/E80/C80 Series<br>Specifications Manual (Hardware) | IB-1501506 | • Model selection<br>• Specifications of hardware unit |
| M800W/M80W Series<br>Connection and Setup Manual | IB-1501268 | • Detailed specifications of hardware unit<br>• Installation, connection, wiring, setup (startup/adjustment) |
| M800S/M80/E80 Series<br>Connection and Setup Manual | IB-1501269 | • Detailed specifications of hardware unit<br>• Installation, connection, wiring, setup (startup/adjustment) |
| C80 Series<br>Connection and Setup Manual | IB-1501452 | • Detailed specifications of hardware unit<br>• Installation, connection, wiring, setup (startup/adjustment) |
| M800/M80/E80 Series<br>PLC Development Manual | IB-1501270 | • Electrical design<br>• I/O relation (assignment, setting, connection), field network<br>• Development environment (PLC on-board, peripheral development environment), etc. |
| M800/M80/E80 Series<br>PLC Programming Manual | IB-1501271 | • Electrical design<br>• Sequence programming<br>• PLC support functions, etc. |
| M800/M80/E80/C80 Series<br>PLC Interface Manual | IB-1501272 | • Electrical design<br>• Interface signals between NC and PLC |
| M800/M80/E80 Series<br>Maintenance Manual | IB-1501273 | • Cleaning and replacement for each unit<br>• Other items related to maintenance |
| C80 Series<br>Maintenance Manual | IB-1501454 | • Cleaning and replacement for each unit<br>• Other items related to maintenance |

Manuals for MTBs (drive section)

| Manual | IB No. | Contents |
|---|---|---|
| MDS-E/EH Series<br>Specifications Manual | IB-1501226 | • Specifications for power supply regeneration type |
| MDS-E/EH Series<br>Instruction Manual | IB-1501229 | • Instruction for power supply regeneration type |
| MDS-EJ/EJH Series<br>Specifications Manual | IB-1501232 | • Specifications for regenerative resistor type |
| MDS-EJ/EJH Series<br>Instruction Manual | IB-1501235 | • Instruction for regenerative resistor type |
| MDS-EM/EMH Series<br>Specifications Manual | IB-1501238 | • Specifications for multi-hybrid, power supply regeneration type |
| MDS-EM/EMH Series<br>Instruction Manual | IB-1501241 | • Instruction for multi-hybrid, power supply regeneration type |
| DATA BOOK | IB-1501252 | • Specifications of servo drive unit, spindle drive unit, motor, etc. |

Manuals for MTBs (Others)

| Manual | No. | Purpose and Contents |
|---|---|---|
| GOT2000 Series User's Manual (Hardware) | SH-081194ENG | • Outline of hardware such as part names, external dimensions, installation, wiring, maintenance, etc. of GOTs |
| GOT2000 Series User's Manual (Utility) | SH-081195ENG | • Outline of utilities such as screen display setting, operation method, etc. of GOTs |
| GOT2000 Series User's Manual (Monitor) | SH-081196ENG | • Outline of each monitor function of GOTs |
| GOT2000 Series Connection Manual (Mitsubishi Electric Products) | SH-081197ENG | • Outline of connection types and connection method between GOT and Mitsubishi Electric connection devices |
| GT Designer3 (GOT2000) Screen Design Manual | SH-081220ENG | • Outline of screen design method using screen creation software GT Designer3 |

■ For M800/M80/E80 Series

| Manual | No. | Purpose and Contents |
|---|---|---|
| GOT2000/GOT1000 Series CC-Link Communication Unit User's Manual | IB-0800351 | • Explanation for handling CC-Link communication unit (for GOT2000 series/GOT1000 series) |
| GX Developer Version 8 Operating Manual (Startup) | SH-080372E | • Explanation for system configuration, installation, etc. of PLC development tool GX Developer |
| GX Developer Version 8 Operating Manual | SH-080373E | • Explanation for operations using PLC development tool GX Developer |
| GX Converter Version 1 Operating Manual | IB-0800004 | • Explanation for operations using data conversion tool GX Converter |
| GX Works2 Installation Instructions | BCN-P5999-0944 | • Explanation for the operating environment and installation method of GX Works2 |
| GX Works2 Version 1 Operating Manual (Common) | SH-080779ENG | • Explanation for the system configuration of GX Works2 and the functions common to Simple project and Structured project such as parameter setting, operation method for the online function |
| GX Works2 Version 1 Operating Manual (Simple Project) | SH-080780ENG | • Explanation for methods for such as creating and monitoring programs in Simple project of GX Works2 |
| GX Works2 Version 1 Operating Manual (Simple Project, Function Block) | SH-080984ENG | • Explanation for methods for such as creating function blocks, pasting function blocks to sequence programs, and operating FB library in Simple project of GX Works2 |
| GX Works2 Version 1 Operating Manual (Structured Project) | SH-080781ENG | • Explanation for methods for such as creating and monitoring programs in Structured project of GX Works2 |
| GX Works3 Installation Instructions | BCN-P5999-0391 | • Explanation for the operating environment and installation method of GX Works3 |
| MELSEC-Q CC-Link System Master/ Local Module User's Manual | SH-080394E | • Explanation for system configuration, installation, wiring, etc. of master/local modules for CC-Link system |
| GOT2000 Series Connection Manual (Non-Mitsubishi Electric Products 1) | SH-081198ENG | • Explanation for connection types and connection method between GOT and other company's devices |
| GOT2000 Series Connection Manual (Non-Mitsubishi Electric Products 2) | SH-081199ENG | |
| GOT2000 Series Connection Manual (Microcomputers, MODBUS/ Fieldbus Products, Peripherals) | SH-081200ENG | • Explanation for connection types and connection method between GOT and microcomputers, MODBUS/fieldbus products, peripherals |
| GT SoftGOT2000 Version1 Operating Manual | SH-081201ENG | • Explanation for system configuration, screen configuration and operation method of monitoring software GT SoftGOT2000 |

■ For C80 Series

| Manual | No. | Purpose and Contents |
|---|---|---|
| MELSEC iQ-R Module Configuration Manual | SH-081262 | ♦ Outline of system configuration, specifications, installation, wiring, maintenance, etc. |
| MELSEC iQ-R CPU Module User's Manual (Startup) | SH-081263 | ♦ Outline of specifications, procedures before operation, troubleshooting, etc. for CPU module |
| MELSEC iQ-R CPU Module User's Manual (Application) | SH-081264 | ♦ Outline of memory, functions, devices, parameters, etc. for CPU module |
| MELSEC iQ-R CC-Link IE Field Network User's Manual (Application) | SH-081259 | ♦ Explanation for functions, parameter settings, programming, troubleshooting, etc. of the CC-Link IE Field Network function |
| QCPU User's Manual (Hardware Design, Maintenance and Inspection) | SH-080483 | ♦ Outline of specifications, necessary knowledge to configure the system and maintenance-related descriptions for Q series CPU module, etc. |
| GX Works3 Operating Manual | SH-081215 | ♦ Outline of functions, programming, etc. |

Reference Manual for MTBs

| Manual | No. | Purpose and Contents |
|---|---|---|
| M800/M80 Series Smart safety observation Specification manual | BNP-C3072-022 | ♦ Explanation for smart safety observation function |
| C80 Series Smart safety observation Specification manual | BNP-C3077-022 | |
| M800/M80 Series CC-Link (Master/ Local) Specification manual | BNP-C3072-089 | ♦ Explanation for CC-Link |
| M800/M80 Series PROFIBUS-DP Specification manual | BNP-C3072-118 | ♦ Explanation for PROFIBUS-DP communication function |
| M800/M80 Series Interactive cycle insertion (Customization) Specification manual | BNP-C3072-121-0003 | ♦ Explanation for interactive cycle insertion |
| M800/M80 Series EtherNet/IP Specifications manual | BNP-C3072-263 | ♦ Explanation for EtherNet/IP |
| M800/M80 Series CC-Link IE Field (Master/local) Specifications manual | BNP-C3072-283 | ♦ Explanation for CC-Link IE Field |
| M800/M80 Series GOT Connection Specifications manual | BNP-C3072-314 | ♦ Explanation for GOT connection |
| M800/M80 Series CC-Link IE Field Basic Specifications manual | BNP-C3072-337 | ♦ Explanation for CC-Link IE Field Basic |
| M800/M80 Series FL-net Specifications manual | BNP-C3072-368 | ♦ Explanation for FL-net |
| M800/M80 Series Synchronous Control Specifications manual | BNP-C3072-074 | ♦ Explanation for synchronous control |
| M800/M80 Series Multiple-Axis Synchronization Control Specifications manual | BNP-C3072-339 | ♦ Explanation for multiple-axis synchronization control |

# Precautions for Safety

Always read the specifications issued by the machine tool builder, this manual, related manuals and attached documents before installation, operation, programming, maintenance or inspection to ensure correct use.
Understand this numerical controller, safety items and cautions before using the unit.
This manual ranks the safety precautions into "DANGER", "WARNING" and "CAUTION".

| ⚠ DANGER |
|---|
| When the user may be subject to imminent fatalities or major injuries if handling is mistaken. |

| ⚠ WARNING |
|---|
| When the user may be subject to fatalities or major injuries if handling is mistaken. |

| ⚠ CAUTION |
|---|
| When the user may be subject to injuries or when physical damage may occur if handling is mistaken. |

Note that even items ranked as " CAUTION", may lead to major results depending on the situation. In any case, important information that must always be observed is described.
The following signs indicate prohibition and compulsory.

| | |
|---|---|
| ⃠ | This sign indicates prohibited behavior (must not do).<br>For example, indicates "Keep fire away". |
| ● | This sign indicated a thing that is pompously (must do).<br>For example, indicates "it must be grounded". |

The meaning of each pictorial sign is as follows.

| | | | | |
|---|---|---|---|---|
| CAUTION | CAUTION<br>rotated object | CAUTION HOT | Danger<br>Electric shock risk | Danger<br>explosive |
| Prohibited | Disassembly is prohibited | KEEP FIRE AWAY | General instruction | Earth ground |

| For Safe Use |
|---|

Mitsubishi Electric CNC is designed and manufactured solely for applications to machine tools to be used for industrial purposes.
Do not use this product in any applications other than those specified above, especially those which are substantially influential on the public interest or which are expected to have significant influence on human lives or properties.

| ⚠ DANGER |
|---|

Not applicable in this manual.

## ⚠ WARNING

1. Items related to operation

⚠ If the operation start position is set in a block which is in the middle of the program and the program is started, the program before the set block is not executed. Please confirm that G and F modal and coordinate values are appropriate. If there are coordinate system shift commands or M, S, T and B commands before the block set as the start position, carry out the required commands using the MDI, etc. If the program is run from the set block without carrying out these operations, there is a danger of interference with the machine or of machine operation at an unexpected speed, which may result in breakage of tools or machine tool or may cause damage to the operators.

⚠ Under the constant surface speed control (during G96 modal), if the axis targeted for the constant surface speed control (normally X axis for a lathe) moves toward the spindle center, the spindle rotation speed will increase and may exceed the allowable speed of the workpiece or chuck, etc. In this case, the workpiece, etc. may jump out during machining, which may result in breakage of tools or machine tool or may cause damage to the operators.

## ⚠ CAUTION

1. Items related to product and manual

⚠ For items described as "Restrictions" or "Usable State" in this manual, the instruction manual issued by the machine tool builder takes precedence over this manual.

⚠ Items not described in this manual must be interpreted as "not possible".

⚠ This manual is written on the assumption that all the applicable functions are included. Some of them, however, may not be available for your NC system.
Refer to the specifications issued by the machine tool builder before use.

⚠ Refer to the Instruction Manual issued by each machine tool builder for details on each machine tool.

⚠ Some screens and functions may differ depending on the NC system (or its version), and some functions may not be possible. Please confirm the specifications before use.

⚠ To protect the availability, integrity and confidentiality of the NC system against cyber-attacks including unauthorized access, denial-of-service (Dos) (*1) attack, and computer virus from external sources via a network, take security measures such as firewall, VPN, and anti-virus software.
(*1) Denial-of-service (Dos) refers to a type of cyber-attack that disrupts services by overloading the system or by exploiting a vulnerability of the system.

⚠ Mitsubishi Electric assumes no responsibility for any problems caused to the NC system by any type of cyber-attacks including DoS attack, unauthorized access and computer virus.

2. Items related to operation

⚠ Before starting actual machining, always carry out graphic check, dry run operation and single block operation to check the machining program, tool offset amount, workpiece compensation amount and etc.

⚠ If the workpiece coordinate system offset amount is changed during single block stop, the new setting will be valid from the next block.

⚠ Turn the mirror image ON and OFF at the mirror image center.

⚠ If the tool offset amount is changed during automatic operation (including during single block stop), it will be validated from the next block or blocks onwards.

⚠ Do not make the synchronized spindle rotation command OFF with one workpiece chucked by the reference spindle and synchronized spindle during the spindle synchronization.
Failure to observe this may cause the synchronized spindle stop, and hazardous situation.

## ⚠ CAUTION

3. Items related to programming

⚠ The commands with "no value after G" will be handled as "G00".

⚠ ";" "EOB" and "%" "EOR" are expressions used for explanation. The actual codes are: For ISO: "CR, LF", or "LF" and "%". Programs created on the Edit screen are stored in the NC memory in a "CR, LF" format, but programs created with external devices such as the FLD or RS-232C may be stored in an "LF" format.
The actual codes for EIA are: "EOB (End of Block)" and "EOR (End of Record)".

⚠ When creating the machining program, select the appropriate machining conditions, and make sure that the performance, capacity and limits of the machine and NC are not exceeded. The examples do not consider the machining conditions.

⃠ Do not change fixed cycle programs without the prior approval of the machine tool builder.

⚠ When programming the multi-part system, take special care to the movements of the programs for other part systems.

⚠ The program including a character of any language other than the display language is not correctly displayed. Do not edit such a program. Any part of the program other than the comment part may also be changed if edited.

# Disposal

(Note) This symbol mark is for EU countries only.
This symbol mark is according to the directive 2006/66/EC Article 20 Information for end-users and Annex II.

Your MITSUBISHI ELECTRIC product is designed and manufactured with high quality materials and components which can be recycled and/or reused.
This symbol means that batteries and accumulators, at their end-of-life, should be disposed of separately from your household waste.
If a chemical symbol is printed beneath the symbol shown above, this chemical symbol means that the battery or accumulator contains a heavy metal at a certain concentration. This will be indicated as follows:
Hg: mercury (0,0005%), Cd: cadmium (0,002%), Pb: lead (0,004%)
In the European Union there are separate collection systems for used batteries and accumulators.
Please, dispose of batteries and accumulators correctly at your local community waste collection/recycling centre.

Please, help us to conserve the environment we live in!

# Trademarks

MELDAS, MELSEC, EZSocket, EZMotion, iQ Platform, MELSEC iQ-R, MELSOFT, GOT, CC-Link, CC-Link/LT, CC-Link IE, CC-Link IE/field, EcoMonitorLight and SLMP are either trademarks or registered trademarks of Mitsubishi Electric Corporation in Japan and/or other countries.

Ethernet is a registered trademark of Xerox Corporation in the United States and/or other countries.
Microsoft®, Windows®, SQL Server® and Access® are either trademarks or registered trademarks of Microsoft Corporation in the United States and/or other countries.
SD logo and SDHC logo are either registered trademarks or trademarks of LLC.
UNIX is a registered trademark of The Open Group in the United States and/or other countries.
Intel® and Pentium® are either trademarks or registered trademarks of Intel Corporation in the United States and/or other countries.
MODBUS® is either a trademark or a registered trademark of Schneider Electric USA, Inc. or the affiliated companies in Japan and/or other countries.
EtherNet/IP is a trademark of Open DeviceNet Vendor Association,Inc.
PROFIBUS-DP and PROFINET are either trademarks or registered trademarks of PROFIBUS User Organization.
Oracle® is a registered trademark of Oracle Corporation, the subsidiaries, or the affiliated companies in the United States and /or other countries.
VNC is a registered trademark of RealVNC Ltd. in the United States and other countries.
Punchtap is licensed by EMUGE.
BiSS is a registered trademark of iC-Haus GmbH.

Other company and product names that appear in this manual are trademarks or registered trademarks of the respective companies.

# 本製品の取扱いについて

( 日本語 /Japanese)
本製品は工業用 ( クラス A) 電磁環境適合機器です。販売者あるいは使用者はこの点に注意し、住商業環境以外での使用をお願いいたします。

# Handling of our product

(English)
This is a class A product. In a domestic environment this product may cause radio interference in which case the user may be required to take adequate measures.

# 본 제품의 취급에 대해서

( 한국어 /Korean)
이 기기는 업무용 (A 급 ) 전자파적합기기로서 판매자 또는 사용자는 이 점을 주의하시기 바라며 가정외의 지역에 서 사용하는 것을 목적으로 합니다 .

# Contents

Chapter 1 - 14 : Refer to Programming Manual (Lathe System) (1/2)

Chapter 15 and later : Refer to Programming Manual (Lathe System) (2/2)


**1 Control Axes ..... 1**

1.1 Coordinate Words and Control Axes ..... 2
1.2 Coordinate Systems and Coordinate Zero Point Symbols ..... 4

**2 Minimum Command Unit ..... 7**

2.1 Input Setting Unit and Program Command Unit ..... 8
2.2 Indexing Increment ..... 9

**3 Program Formats ..... 11**

3.1 Program Format ..... 12
3.2 File Format ..... 16
3.3 Optional Block Skip ..... 19
3.3.1 Optional Block Skip; / ..... 19
3.3.2 Optional Block Skip Addition ; /n ..... 21
3.4 G Code ..... 23
3.4.1 Modal, Unmodal ..... 23
3.4.2 G Code Lists ..... 23
3.4.3 Table of G Code Lists ..... 24
3.5 Precautions before Starting Machining ..... 30

**4 Pre-read Buffer ..... 31**

4.1 Pre-read Buffer ..... 32

**5 Position Commands ..... 33**

5.1 Absolute Command/Incremental Command; G90, G91 ..... 34
5.2 Diameter Designation and Radius Designation ..... 36
5.2.1 Diameter/Radius Designation ..... 36
5.2.2 Diameter/Radius Designation Switch; G10.9 ..... 37
5.3 Inch/Metric Conversion; G20, G21 ..... 42
5.4 Decimal Point Input ..... 44

**6 Interpolation Functions ..... 51**

6.1 Positioning (Rapid Traverse); G00 ..... 52
6.2 Linear Interpolation; G01 ..... 55
6.3 Circular Interpolation; G02, G03 ..... 57
6.4 R Specification Circular Interpolation; G02, G03 ..... 63
6.5 Plane Selection; G17, G18, G19 ..... 66
6.6 Thread Cutting ..... 68
6.6.1 Constant Lead Thread Cutting; G33 ..... 68
6.6.2 Inch Thread Cutting; G33 ..... 73
6.6.3 Continuous Thread Cutting ; G33 ..... 75
6.6.4 Variable Lead Thread Cutting; G34 ..... 76
6.6.5 Circular Thread Cutting; G35,G36 ..... 78
6.6.6 Thread Cutting Override ..... 82
6.6.7 Variable Feed Thread Cutting ..... 85
6.6.8 Thread Cutting Time Constant ..... 91
6.6.9 Thread Cutting Start Shift Angle Operation Switching ..... 93
6.6.10 Thread Cutting Feed Forward ..... 95
6.7 Helical Interpolation; G02, G03 ..... 98
6.8 Milling Interpolation; G12.1 ..... 103
6.8.1 Selecting Milling Mode ..... 105
6.8.2 Milling Interpolation Control and Command Axes ..... 106
6.8.3 Selecting a Plane during the Milling Mode ; G17,G19,G16 ..... 108
6.8.4 Setting Milling Coordinate System ..... 110
6.8.5 Preparatory Function ..... 112
6.8.6 Switching from Milling Mode to Turning Mode; G13.1 ..... 117
6.8.7 Feed Functions ..... 118
6.8.8 Tool Length Compensation ..... 119
6.8.9 Tool Radius Compensation ..... 121

6.8.9.1 Tool Radius Compensation Operation ..... 122
6.8.9.2 Interference Check ..... 136
6.8.10 Relationship between Milling Interpolation and Other Functions ..... 144
6.9 Cylindrical Interpolation; G07.1 ..... 146
6.10 Polar Coordinate Interpolation; G12.1, G13.1/G112, G113 (Only 6 and 7 in G Code List) ..... 157
6.11 Exponential Interpolation; G02.3, G03.3 ..... 164

**7 Feed Functions ..... 171**
7.1 Rapid Traverse Rate ..... 172
7.1.1 Rapid Traverse Rate ..... 172
7.1.2 G00 Feedrate Command (,F Command) ..... 173
7.2 Cutting Feedrate ..... 177
7.3 F1-digit Feed ..... 178
7.4 Feed Per Minute/Feed Per Revolution (Asynchronous Feed/Synchronous Feed); G94,G95 ..... 180
7.5 Feedrate Designation and Effects on Control Axes ..... 182
7.6 Thread Cutting Mode ..... 187
7.7 Automatic Acceleration/Deceleration after Interpolation ..... 188
7.8 Rapid Traverse Constant-gradient Acceleration/Deceleration ..... 193
7.9 Cutting Feed Constant-gradient Acceleration/Deceleration ..... 199
7.10 Speed Clamp ..... 207
7.11 Exact Stop Check; G09 ..... 208
7.12 Exact Stop Check Mode; G61 ..... 212
7.13 Deceleration Check ..... 213
7.13.1 Deceleration Check ..... 213
7.13.2 Deceleration Check When Movement in the Opposite Direction Is Reversed ..... 221
7.14 Rapid Traverse Block Overlap; G0.5 P1 ..... 224
7.14.1 Rapid Traverse Block Overlap for G00; G0.5 ..... 226
7.14.2 Rapid Traverse Block Overlap for G28 ..... 236
7.15 Automatic Corner Override ..... 238
7.15.1 Automatic Corner Override ; G62 ..... 243
7.16 Tapping Mode; G63 ..... 244
7.17 Cutting Mode; G64 ..... 245

**8 Dwell ..... 247**
8.1 Dwell (Time-based Designation); G04 ..... 248
8.2 Dwell (Revolution-based Designation); G04 ..... 251

**9 Miscellaneous Functions ..... 255**
9.1 Miscellaneous Functions (M8-Digits) ..... 256
9.2 2nd Miscellaneous Functions (A8-digits, B8-digits or C8-digits) ..... 260
9.3 Index Table Indexing ..... 261
9.4 M Code Output during Axis Traveling ; G117 ..... 266

**10 Spindle Functions ..... 267**
10.1 Spindle Functions ..... 268
10.2 Constant Surface Speed Control; G96, G97 ..... 269
10.3 Spindle Clamp Speed Setting; G92 ..... 283
10.4 Multiple-spindle Control ..... 285
10.4.1 Multiple-spindle Control I (Spindle Control Command); S○= ..... 286
10.4.2 Multiple-spindle Control I (Spindle Selection Command) ; G43.1,G44.1, G47.1 ..... 287
10.5 Spindle Position Control (Spindle/C Axis Control) ..... 293
10.6 Spindle Speed Fluctuation Detection; G162/G163 ..... 302

**11 Tool Functions ..... 309**
11.1 Tool Functions (T8-digit BCD) ..... 310
11.2 T Code Mirror Image for Facing Tool Posts ..... 311

**12 Tool Compensation Functions ..... 313**
12.1 Tool Compensation ..... 314
12.1.1 Tool Compensation Start ..... 315
12.1.2 Expanded Method of Starting Tool Compensation ..... 317
12.1.3 Allocation of Tool Compensation Sets to Part Systems ..... 320
12.1.4 Tool Compensation for Additional Axes ..... 322
12.1.5 Tool Compensation for 2nd Additional Axis ..... 325
12.2 Tool Length Compensation ..... 329

12.3 Tool Nose Wear Compensation ..... 331
12.4 Tool Nose Radius Compensation; G40, G41, G42, G46 ..... 332
12.4.1 Tool Nose Point and Compensation Direction ..... 334
12.4.2 Nose R Compensation Operations ..... 337
12.4.3 Other Operations during Nose R Compensation ..... 354
12.4.4 G41/G42 Commands and I, J, K Designation ..... 361
12.4.5 Interrupts during Nose R Compensation ..... 365
12.4.6 General Precautions for Nose R Compensation ..... 367
12.4.7 Interference Check ..... 368

**13 Fixed Cycle ..... 375**
13.1 Fixed Cycle for Turning Machining ..... 376
13.1.1 Longitudinal Cutting Cycle; G77 ..... 377
13.1.2 Thread Cutting Cycle; G78 ..... 380
13.1.3 Face Cutting Cycle; G79 ..... 384
13.2 Fixed Cycles for Turning Machining (MITSUBISHI CNC Special Format) ; G77, G78, G79 ..... 387
13.3 Compound Type Fixed Cycle for Turning Machining ..... 389
13.3.1 Longitudinal Rough Cutting Cycle; G71 ..... 390
13.3.2 Face Rough Cutting Cycle; G72 ..... 408
13.3.3 Formed Material Rough Cutting Cycle; G73 ..... 410
13.3.4 Finishing Cycle; G70 ..... 414
13.3.5 Face Cut-off Cycle; G74 ..... 416
13.3.6 Longitudinal Cut-off Cycle; G75 ..... 418
13.3.7 Compound Type Thread Cutting Cycle; G76 ..... 420
13.3.8 Selecting Finished Shape Program Search Method ..... 425
13.3.9 Tool Shape Compensation for Turning ..... 428
13.3.10 Precautions for Compound Type Fixed Cycle for Turning Machining (G70 to G76) ..... 432
13.4 Compound Type Fixed Cycle for Turning Machining (MITSUBISHI CNC Special Format) ; G71, G73, G74, G76 ..... 435
13.5 Fixed Cycle for Drilling ..... 441
13.5.1 Face Deep Hole Drilling Cycle 1 (Longitudinal Deep Hole Drilling Cycle 1) ; G83 (G87) ..... 444
13.5.2 Face Tapping Cycle (Longitudinal Tapping Cycle) / Face Reverse Tapping Cycle (Longitudinal Reverse Tapping Cycle); G84 (G88)/G84.1 (G88.1) ..... 446
13.5.3 Face Boring Cycle (Longitudinal Boring Cycle) ; G85 (G89) ..... 464
13.5.4 Deep Hole Drilling Cycle 2; G83.2 ..... 466
13.5.5 Thread Milling Cycle; G187 ..... 468
13.5.6 Hole Edge Chamfering Cycle; G185 ..... 472
13.5.7 Fixed Cycle for Drilling Cancel; G80 ..... 479
13.5.8 Precautions When Using a Fixed Cycle for Drilling ..... 480
13.5.9 Initial Point and R Point Level Return; G98, G99 ..... 481
13.5.10 Setting of Workpiece Coordinates in Fixed Cycle Mode ..... 482
13.5.11 Drilling Cycle High-Speed Retract ..... 483
13.5.12 Acceleration/Deceleration Mode Change in The Fixed Cycle for Drilling ..... 485
13.6 Fixed Cycle for Drilling (MITSUBISHI CNC Special Format) ..... 487
13.6.1 Drilling Cycle, Spot Drilling Cycle ; G81 ..... 490
13.6.2 Drilling Cycle, Counter Boring Cycle ; G82 ..... 491
13.6.3 Deep Hole Drilling Cycle; G83 ..... 492
13.6.4 Stepping Cycle; G83.1 ..... 494
13.6.5 Tapping Cycle; G84 ..... 496
13.6.6 Synchronous Tapping Cycle ; G84.2 ..... 500
13.6.7 Boring Cycle ; G85 ..... 505
13.6.8 Boring Cycle ; G89 ..... 506
13.6.9 Hole Edge Chamfering Cycle; G185 ..... 507
13.6.10 Precautions on Using The Fixed Cycle for Drilling (MITSUBISHI CNC Special Format) ..... 508

**14 Macro Functions ..... 511**
14.1 Subprogram Control; M98, M99, M198 ..... 512
14.1.1 Subprogram Call; M98, M99 ..... 512
14.1.2 Subprogram Call; M198 ..... 518
14.2 Variable Commands ..... 519
14.3 User Macro ..... 524
14.4 Macro Call Instructions ..... 525
14.4.1 Simple Macro Calls; G65 ..... 525
14.4.2 Modal Call A (Movement Command Call) ; G66 ..... 529
14.4.3 Modal Call B (for Each Block); G66.1 ..... 531
14.4.4 G Code Macro Call ..... 533
14.4.5 Miscellaneous Command Macro Call (for M, S, T, B Code Macro Call) ..... 535

14.4.6 Detailed Description for Macro Call Instruction ... 537
14.4.7 Handling the Macro Call Command [C80] ... 539
14.4.8 ASCII Code Macro ... 543
14.5 Variables Used in User Macros ... 548
14.5.1 Common Variables ... 550
14.5.2 Local Variables (#1 to #33) ... 551
14.5.3 System Variables ... 553
14.6 User Macro Commands ... 554
14.6.1 Operation Commands ... 554
14.6.2 Control Commands ... 559
14.6.3 External Output Commands; POPEN, PCLOS, DPRNT ... 565
14.6.4 Precautions ... 569
14.7 Macro Interruption; M96, M97 ... 571

**15 Program Support Functions ... 581**
15.1 Corner Chamfering I/Corner Rounding I ... 582
15.1.1 Corner Chamfering I ; G01 X_ Z_ ,C_/I_/K_/C_ ... 582
15.1.2 Corner Rounding I ; G01 X_ Z_ ,R_/R_ ... 584
15.1.3 Corner Chamfering Expansion/Corner Rounding Expansion ... 586
15.1.4 Interrupt during Corner Chamfering/Interrupt during Corner Rounding ... 588
15.2 Corner Chamfering II/Corner Rounding II ... 589
15.2.1 Corner Chamfering II ; G01/G02/G03 X_ Z_ ,C_/I_/K_/C_ ... 589
15.2.2 Corner Rounding II ; G01/G02/G03 X_ Z_ ,R_/R_ ... 592
15.2.3 Corner Chamfering Expansion/Corner Rounding Expansion ... 594
15.2.4 Interrupt during Corner Chamfering/Interrupt during Corner Rounding ... 594
15.3 Linear Angle Command ; G01 X_/Z_ A_/,A_ ... 595
15.4 Geometric I; G01 A_ ... 596
15.5 Geometric IB ... 598
15.5.1 Geometric IB (Automatic Calculation of Contact Point of Two Circular Arcs); G02/G03 P_Q_ /R_ ... 599
15.5.2 Geometric IB (Automatic Calculation of Intersection Point between Line And Circular Arc) ; G01 A_ , G02/G03 P_Q_H_ ... 603
15.5.3 Geometric IB (Automatic Calculation of Contact Point between Line And Circular Arc) ; G01 A_ , G02/G03 R_H_ ... 607
15.6 Manual Arbitrary Reverse Run Prohibition ; G127 ... 611
15.7 Data Input by Program ... 617
15.7.1 Parameter Input by Program; G10 L70, G11 ... 617
15.7.2 Compensation Data Input by Program (Tool Compensation Amount) ; G10 L10/L11, G11 ... 619
15.7.3 Compensation Data Input by Program (Workpiece Offset Amount) ; G10 L2/L20, G11 ... 621
15.7.4 Material Shape Input by Program; G10 L101, G11 ... 623
15.8 Tool Life Management ... 626
15.8.1 Tool Life Management II; T****99, T****88 ... 626
15.8.2 Tool Life Management Data Input; G10 L3, G11 ... 628
15.8.3 Allocation of the Number of Tool Life Management Sets to Part Systems ... 630
15.9 Axis Name Switch ; G111 ... 632
15.10 Mirror Image for Facing Tool Posts ; G68,G69 ... 639
15.11 Interactive Cycle Insertion; G180 ... 649
15.11.1 Interactive Cycle Insertion ... 649
15.11.2 Interactive Macro ... 652
15.12 Axis Name Extension ... 653
15.13 Program Format Switch; G188/G189 ... 659
15.14 Machining Interruption [C80]; G26 ... 670
15.15 Vibration Cutting Control (VCC); G08.5 ... 685

**16 Multi-part System Control ... 699**
16.1 Timing Synchronization Operation ... 700
16.1.1 Timing Synchronization Operation (! code) !n (!m ...) L ... 700
16.1.2 Timing Synchronization Operation with Start Point Designated (Type 1) ; G115 ... 704
16.1.3 Timing Synchronization Operation with Start Point Designated (Type 2) ; G116 ... 707
16.1.4 Timing Synchronization Operation Function Using M codes ; M*** ... 710
16.1.5 Timing Synchronization When Timing Synchronization Ignore Is Set ... 714
16.2 Balance Cut ; G15,G14 ... 717
16.3 Mixed Control ... 722
16.3.1 Cross Axis Control ;G110 ... 722
16.3.2 Arbitrary Axis Exchange ; G140, G141, G142 ... 727
16.4 Control Axis Superimposition ... 749
16.4.1 Control Axis Superimposition ; G126 ... 749
16.4.2 Arbitrary Axis Superimposition ; G156 ... 772

16.5 Control Axis Synchronization between Part Systems ; G125 ... 789
16.6 Multi-part System Simultaneous Thread Cutting Cycle ... 797
16.6.1 Multi-part System Simultaneous Thread Cutting Parameter Setting Command ; G76 ... 797
16.6.2 Multi-part System Simultaneous Thread Cutting Cycle I ; G76.1 ... 798
16.6.3 Two-part System Simultaneous Thread Cutting Cycle II ; G76.2 ... 801
16.7 Multi-part System Simultaneous Thread Cutting Cycle (MITSUBISHI CNC Special Format) ; G76.1, G76.2 ... 804
16.8 Synchronization between Part Systems ... 807
16.8.1 Dwell/Miscellaneous Function Time Override ... 807
16.8.2 Synchronization between Part Systems OFF ... 811
16.9 Sub Part System Control ... 813
16.9.1 Sub Part System Control I; G122 ... 813
16.9.2 Sub Part System Control II ; G144 ... 830

**17 High-speed High-accuracy Control ... 845**
17.1 High-speed Machining Mode ... 846
17.1.1 High-speed Machining Mode I, II; G05 P1, G05 P2 ... 846
17.2 High-accuracy Control ... 855
17.2.1 High-accuracy Control ; G61.1, G08 ... 855
17.2.2 SSS Control ... 875
17.2.3 Tolerance Control ... 879
17.2.4 Initial High-accuracy Control ... 883
17.2.5 Multi-part System Simultaneous High-accuracy ... 884
17.3 High-speed High-accuracy Control ... 886
17.3.1 High-speed High-accuracy Control I, II ; G05.1 Q1/Q0, G05 P10000/P0 ... 886
17.3.2 Cutting Speed Clamp with Acceleration Rate Judgment ... 897
17.3.3 High-speed Mode Corner Deceleration ... 898
17.3.4 Precautions on High-speed High-accuracy Control ... 899
17.4 Machining Condition Selection I ; G120.1, G121 ... 901

**18 Advanced Multi-Spindle Control Function ... 905**
18.1 Spindle Synchronization ... 906
18.1.1 Spindle Synchronization I; G114.1 ... 907
18.1.2 Precautions for Using Spindle Synchronization Control ... 920
18.1.3 Spindle Position Control (Spindle/C Axis Control) under Spindle Synchronization Control ... 922
18.2 Tool Spindle Synchronization I ... 928
18.2.1 Tool Spindle Synchronization IA (Spindle-Spindle, Polygon) ; G114.2, G113 ... 928
18.2.2 Tool Spindle Synchronization IB (Spindle-Spindle, Polygon) ; G51.2/G50.2 or G251/G250 (only 6 and 7 in G code list) ... 935
18.2.3 Tool Spindle Synchronization IC (Spindle-NC Axis, Polygon) ; G51.2/G50.2 or G251/G250 (only 6 and 7 in G code list) ... 942
18.3 Tool Spindle Synchronization II ... 946
18.3.1 Tool Spindle Synchronization II (Hobbing) ; G114.3/G113 ... 946
18.4 Spindle Superimposition ; G164, G113/G113.1 ... 964
18.5 Multiple Spindle Synchronization Set Control ... 980

**19 Advanced Machining Control ... 995**
19.1 Inclined Surface Machining; G68.2/G69.1 ... 996
19.1.1 How to Define Feature Coordinate System Using Roll-Pitch-Yaw Angles ... 998
19.1.2 Details of Inclined Surface Machining Operation ... 1000
19.1.3 Rotary Axis Reference Position Selection ... 1001
19.1.4 Relationship between Inclined Surface Machining and Other Functions ... 1002
19.1.5 Precautions for Inclined Surface Machining ... 1011
19.2 Simple Inclined Surface Machining ... 1012
19.2.1 Simple Inclined Surface Control ; G176 ... 1026
19.2.2 Simple Tool Center Point Control ; G174 ... 1030
19.2.3 Tool Axis Direction Control ; G53.1 ... 1037
19.3 Rotation Center Error Compensation (Precautions for Creating a Machining Program) ... 1039

**20 Coordinate System Setting Functions ... 1045**
20.1 Coordinate Words and Control Axes ... 1046
20.2 Types of Coordinate Systems ... 1048
20.2.1 Basic Machine, Workpiece and Local Coordinate Systems ... 1048
20.2.2 Machine Zero Point and 2nd Reference Position (Zero point) ... 1049
20.2.3 Automatic Coordinate System Setting ... 1050
20.2.4 Coordinate System for Rotary Axis ... 1051

20.3 Basic Machine Coordinate System Selection; G53 ... 1054
20.4 Coordinate System Setting; G92 ... 1057
20.5 Local Coordinate System Setting; G52 ... 1059
20.6 Workpiece Coordinate System Selection and Extended Workpiece Coordinate System Selection; G54 to G59, G54.1 ... 1060
20.7 Workpiece Coordinate System Shift; G10 L10 P0 ... 1063
20.8 Workpiece Coordinate System Preset; G92.1 ... 1065
20.9 3-dimensional Coordinate Conversion; G68.1/G69.1 ... 1070
20.10 Coordinate Rotation by Program; G68.1/G69.1 ... 1092
20.11 Reference Position (Zero Point) Return; G28, G29 ... 1106
20.12 2nd, 3rd, and 4th Reference Position (Zero Point) Return ; G30 ... 1110
20.13 Tool Change Position Return ; G30.1 - G30.5 ... 1113
20.14 Reference Position Check; G27 ... 1116

**21 Protection Function ... 1117**
21.1 Chuck Barrier/Tailstock Barrier ; G22,G23 ... 1118
21.2 Stored Stroke Limit; G22, G23 ... 1122
21.2.1 Stroke Check before Travel in Stored Stroke Limit Area (only 6 and 7 in G code list) ... 1124
21.3 Enable Interfering Object Selection Data; G186 ... 1127

**22 Measurement Support Functions ... 1131**
22.1 Automatic Tool Length Measurement; G37 ... 1132
22.2 Skip Function; G31 ... 1136
22.3 Multi-step Skip Function 1; G31.n, G04 ... 1142
22.4 Multi-step Skip Function 2; G31 P ... 1144
22.5 Speed Change Skip; G31 Fn ... 1146
22.6 Torque Limitation Skip; G160 ... 1150
22.7 Programmable Current Limitation; G10 L14 ... 1154

**23 System Variables ... 1155**
23.1 System Variables List ... 1156
23.1.1 System Variables for Program Format Switch ... 1158
23.2 System Variables (G Command Modal) ... 1160
23.3 System Variables (Non-G Command Modal) ... 1161
23.4 System Variables (Modal Information at Macro Interruption) ... 1162
23.5 System Variables (Tool Information) ... 1164
23.6 System Variables (Tool Offset) ... 1172
23.7 System Variables (Tool Life Management) ... 1174
23.8 System Variables (Workpiece Coordinate Offset) ... 1178
23.9 System Variables (Extended Workpiece Coordinate Offset) ... 1179
23.10 System Variables (External Workpiece Coordinate Offset / Workpiece Coordinate System Shift) ... 1180
23.11 System Variables (Position Information) ... 1181
23.12 System Variables (Alarm) ... 1183
23.13 System Variables (Message Display and Stop) ... 1184
23.14 System Variables (Cumulative Time) ... 1185
23.15 System Variables (Time Read Variables) ... 1186
23.16 System Variables (Machining Information) ... 1188
23.17 System Variables (Number of Workpiece Machining Times) ... 1189
23.18 System Variables (Mirror Image) ... 1189
23.19 System Variables (Rotary Axis Configuration Parameter) ... 1190
23.20 System Variables (Parameter Reading) ... 1191
23.21 System Variables (Macro Interface Input (PLC -> NC)) ... 1195
23.22 System Variables (Macro Interface Output (NC -> PLC)) ... 1201
23.23 System Variables (R Device Access Variables) ... 1207
23.24 System Variables (PLC Data Reading) ... 1213
23.25 System Variables (Interfering Object Selection) ... 1217
23.26 System Variables (ZR Device Access Variables) [C80] ... 1220
23.27 System Variables (NC Data Reading/Writing with API Section and Sub-section Nos. Input/Output by Program) [M8] ... 1222

**24 Appx.1: Fixed Cycles ... 1225**

**25 Appx.2: Supplementary Explanation for Incomplete Thread Area of Thread Control ... 1233**

**26 Appx.3: Parameter Input by Program N No. (G10 L50, G11) ... 1239**

**27 Appx.4: Command Value Range Lists ... 1243**

# 1

# Control Axes

# 1.1 Coordinate Words and Control Axes

## Function and purpose

In the case of a lathe, axis names (coordinate words) and directions are defined as follows.

The axis at right angles to the spindle
Axis name: X axis

The axis parallel to the spindle
Axis name: Z axis

### Coordinate axes and polarities

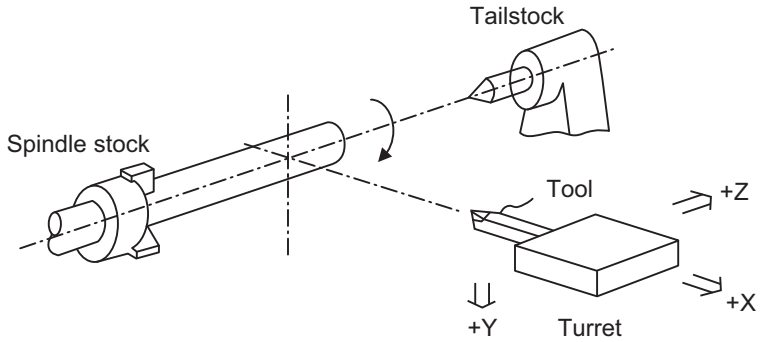


Since coordinates based on the right hand rule are used with a lathe, in the above figure, the positive direction of the Y axis which is at right angles to the X-Z plane is downward.
Note that a circular on the X-Z plane is expressed as clockwise or counterclockwise as seen from the forward direction of the Y axis.
(Refer to "Circular Interpolation; G02, G03".)

## Relationship between coordinates

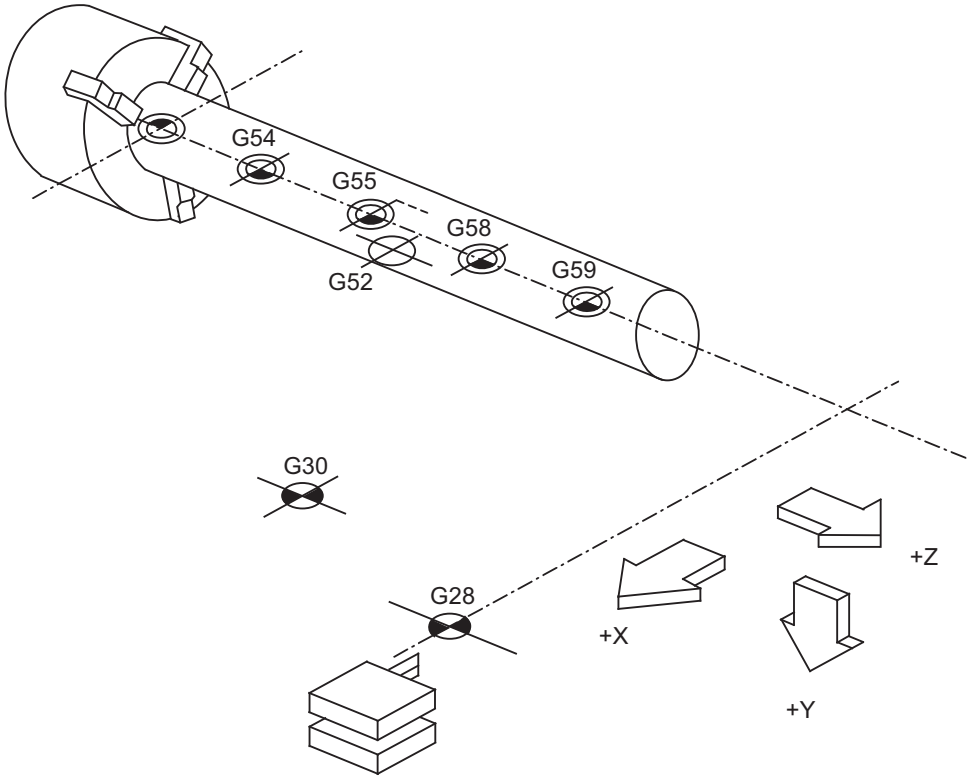


Reference position

Basic machine coordinate

Workpiece coordinate zero point

Local coordinate zero point

## 1.2 Coordinate Systems and Coordinate Zero Point Symbols

Reference position:
A specific position to establish coordinate systems and change tools

Basic machine coordinate zero point:
A position specific to machine

Workpiece coordinate zero points (G54 to G59)
A coordinate zero point used for workpiece machining

The basic machine coordinate system is the coordinate system that expresses the position (tool change position, stroke end position, etc.) that is specific to the machine.
Workpiece coordinate systems are used for workpiece machining.
Upon completion of the dog-type reference position return, the parameters are referred and the basic machine coordinate system and workpiece coordinate systems (G54 to G59) are automatically set.
The offset of the basic machine coordinate zero point and reference position is set by a parameter. (Normally, set by MTB)
Workpiece coordinate systems can be set with coordinate systems setting functions, workpiece coordinate offset measurement (additional specification), and etc.

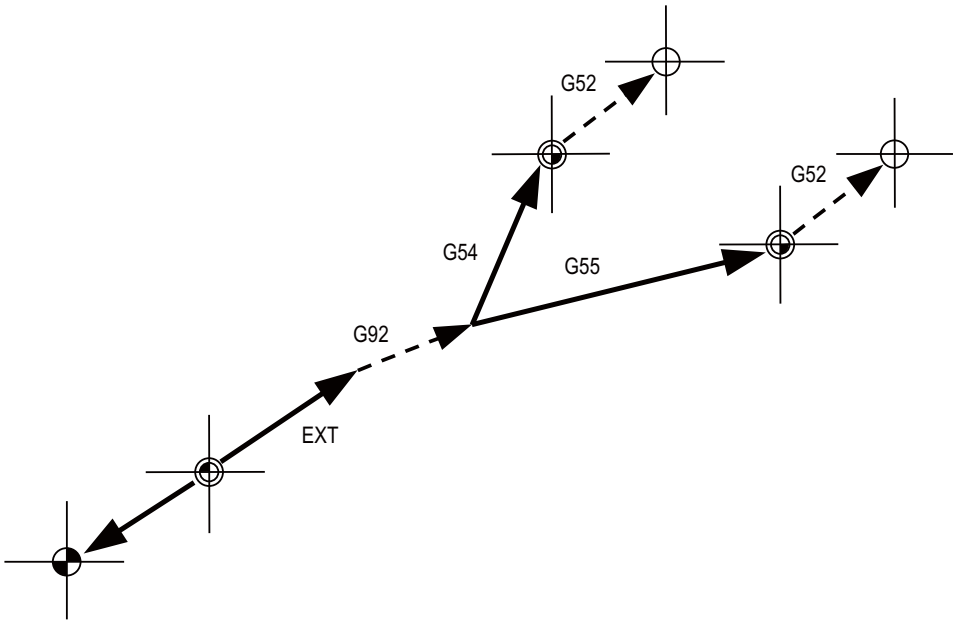


Reference position

Basic machine coordinate zero point

Workpiece coordinate zero points

Local coordinate zero point

Offset set by a parameter

Offset set by a program
("0" is set when turning the power ON)

G52 Local coordinate system offset (*1)
G54 Workpiece coordinate (G54) system offset (*1)
G55 Workpiece coordinate (G55) system offset
G92 G92 Coordinate system shift
EXT External workpiece coordinate offset

(*1) G52 offset is independently possessed by G54 to G59 respectively.

The local coordinate systems (G52) are valid on the coordinate systems designated by workpiece coordinate systems 1 to 6.
Using the G92 command, the basic machine coordinate system can be shifted and made into a hypothetical machine coordinate system. At the same time, workpiece coordinate systems 1 to 6 are also shifted.

# 2

# Minimum Command Unit

## 2.1 Input Setting Unit and Program Command Unit

### Function and purpose

The input setting units are the units of setting data including tool compensation amounts and workpiece coordinates compensation.
The program command units are the units of movement amounts in programs.
These are expressed with mm, inch or degree (°).

### Detailed description

Program command units for each axis and input setting units, common for all axes, are determined by the setting of parameters as follows. (This depends on the MTB specifications.)

| | Parameter | | Linear axis | | Rotary axis (°) |
|---|---|---|---|---|---|
| | | | Metric | Inch | |
| Input setting unit | #1003 iunit | = B | 0.001 | 0.0001 | 0.001 |
| | | = C | 0.0001 | 0.00001 | 0.0001 |
| | | = D | 0.00001 | 0.000001 | 0.00001 |
| | | = E | 0.000001 | 0.0000001 | 0.000001 |
| Program command unit (Input command unit) | #1015 cunit | = 0 | Follow #1003 iunit | | |
| | | = 1 | 0.0001 | 0.00001 | 0.0001 |
| | | = 10 | 0.001 | 0.0001 | 0.001 |
| | | = 100 | 0.01 | 0.001 | 0.01 |
| | | = 1000 | 0.1 | 0.01 | 0.1 |
| | | = 10000 | 1.0 | 0.1 | 1.0 |

### Precautions

(1) Inch/metric changeover can be handled by either a parameter screen (#1041 I_inch: valid only when the power is turned ON) or G commands (G20 or G21).
However, the changeover by a G command applies only to the program command units, and not to the input setting units. Consequently, the tool offset amounts and other compensation amounts as well as the variable data should be preset in order to correspond to input setting units.

(2) The millimeter and inch systems cannot be used together.

(3) When performing a circular interpolation between the axes whose program command units are different, the center command (I, J, K) and the radius command (R) are designated by the input setting units. (Use a decimal point to avoid confusion.)

## 2.2 Indexing Increment

### Function and purpose

This function limits the command value for the rotary axis.
This can be used for indexing the rotary table, etc. It is possible to cause a program error with a program command other than an indexing increment (parameter setting value).

### Detailed description

When the indexing increment (parameter) which limits the command value is set, the rotary axis can only be positioned with that indexing increment. If a program other than the indexing increment setting value is commanded, a program error (P20) will occur.
The indexing position will not be checked when the parameter is set to 0.

(Example) When the indexing increment setting value is 2 degrees, the machine coordinate position at the end point can only be commanded with the 2-degree increment.

| | |
|---|---|
| G90 G01 C102.000 ; | Moves to the 102 degree angle. |
| G90 G01 C101.000 ; | Program error |
| G90 G01 C102 ; | Moves to the 102 degree angle. (Decimal point type II) |

The following axis specification parameter is used. (This depends on the MTB specifications.)

| # | Item | | Details | Setting range (unit) |
|---|---|---|---|---|
| 2106 | Index unit | Indexing increment | Set the indexing increment with which the rotary axis can be positioned. | 0 to 360(°) |

### Precautions

(1) When the indexing increment is set, positioning will be conducted in degree unit.

(2) The indexing position is checked with the rotary axis, and is not checked with other axes.

(3) When the indexing increment is set to 2 degrees, the rotary axis is set to the B axis, and the B axis is moved with JOG to the 1.234 position, an indexing error will occur if "G90B5." or "G91B2." is commanded.

# 3

# Program Formats

## 3.1 Program Format

A collection of commands assigned to an NC to move a machine is called "program".
A program is a collection of units called "block" which specifies a sequence of machine tool operations.
Blocks are written in the order of the actual movement of a tool.
A block is a collection of units called "word" which constitutes a command to an operation.
A word is a collection of characters (alphabets, numerals, signs) arranged in a specific sequence.

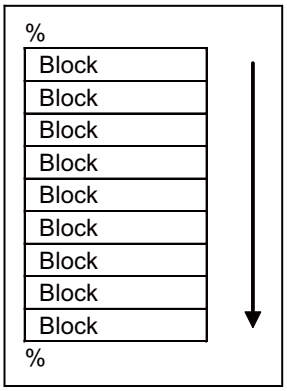

## Detailed description

### Program

A program format looks as follows.

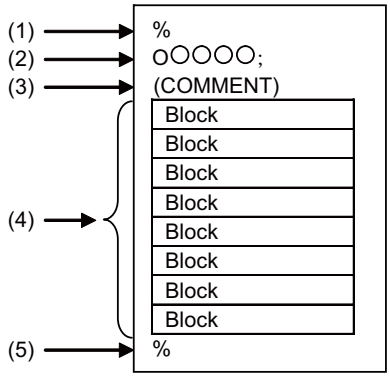


(1) Program start

Input an End Of Record (EOR, %) at the head of a program.
It is automatically added when writing a program on an NC. When using an external device, do not forget to input it at the head of a program. For details, refer to the description of the file format.

(2) Program No.

Program Nos. are used to classify programs by main program unit or subprogram unit. They are designated by the address "O" followed by numbers of up to 8 digits. Program Nos. must be written at the head of programs.
A setting is available to prohibit O8000s and O9000s from editing (edit lock). Refer to the instruction manual for the edit lock.

(3) Comment

Data between control out "(" and control in ")" is ignored.
Information including program names and comments can be written in.

(4) Program section

A program is a collection of several blocks.

(5) Program end

Input an end of record (EOR, %) at the end of a program.
It is automatically added when writing a program on an NC.

## Block and word

**[Block]**

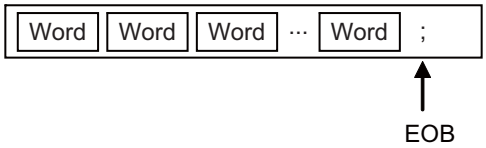


A block is a least command increment, consisting of words.
It contains the information which is required for a machine tool to execute a specific operation. One block unit constitutes a complete command.
The end of each block is marked with an End of Block (EOB, expressed as ";" for the sake of convenience).

**[Word]**

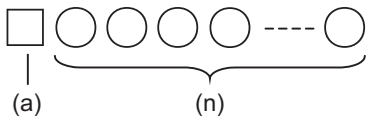


(a) Alphabet (address)
(n) Number

A word consists of a set of an alphabet, which is called an address, and numerals (numerical information).
Meanings of the numerical information and the number of significant digits of words differ according to an address.

**Note**

(1) Leading zeros can be omitted from numerals.

The major contents of a word are described below.

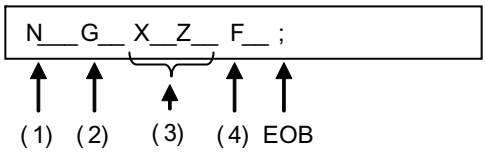


(1) Sequence No.

"Sequence No." consists of the address "N" followed by numbers up to 8 digits for M8 Series and 6 digits for C80 Series. It is used as an index when searching a necessary block in a program (as branch destination and etc.). It does not affect the operation of a tool machine.

(2) Preparatory function (G code, G function)

"Preparatory function (G code, G function)" consists of the address G followed by numbers of 2 or 3 digits (it may include 1 digit after the decimal point). G codes are mainly used to designate functions, such as axis movements and setting of coordinate systems. For example, G00 executes a positioning and G01 executes a linear interpolation.

G codes include the six G code lists 2, 3, 4, 5, 6 and 7. Refer to the description of G code system for available G codes.

(3) Coordinate words

"Coordinate words" specify the coordinate positions and movement amounts of machine tool axes. They consist of an address which indicates each axis of a tool machine followed by numerical information ("+" or "-" signs and numerals).
X, Y, Z, U, V, W, A, B and C are used as address. Coordinate positions and movement amounts are specified by either "incremental commands" or "absolute commands".
The axis name can be expanded to two letters depending on the MTB specifications. For details, refer to "15.12 Axis Name Extension".

(4) Feed functions (F functions)

"Feed Functions (F functions)" designate the speed of a tool relative to a workpiece. They consist of the address F followed by numbers.

## Main program and subprograms

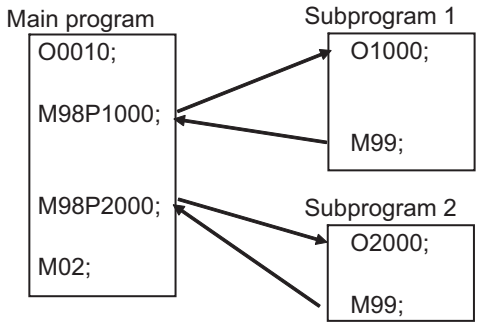


Fixed sequences or repeatedly used parameters can be stored in the memory as subprograms which can then be called from the main program when required.
If a command is issued to call a subprogram while a main program is being executed, the subprogram will be executed. And when the subprogram is completed, the main program will be resumed.
Refer to "14.1 Subprogram Control; M98, M99, M198" for details of subprogram execution.

# 3.2 File Format

## Function and purpose

Program file can be created using NC edit screen and PC.
It can be input/output between NC memory and an external I/O device. Hard discs stored in NC unit are regarded as an external I/O device. For the details of input/output method, refer to the instruction manual.
Program file format differs depending on the device which creates the program.

## Detailed description

### Devices available for input/output

Devices which can input/output program files are as follows.

| External data input/output interface | M800W/ M80W | M800S/M80 | C80 | E80 |
|---|---|---|---|---|
| NC memory | ○ | ○ | ○ | ○ |
| Serial | ○ | ○ | - | ○ |
| SD card in control unit (HD) | ○ | - | - | - |
| Front-side SD card | ○ | ○ | ○ (*1) | ○ |
| Ethernet | ○ | ○ | ○ | ○ |
| Display unit-side data server (DS) | ○ | ○ | - | ○ |
| Front-side USB memory | ○ | ○ | ○ (*2) | ○ |
| IPC (Industrial PC) | - | ○ (*3) | - | - |

(*1) GOT back-side SD card

(*2) GOT front-side USB memory

(*3) This function is valid only for M80 Series. The availability of the function depends on the MTB specifications. (parameter "#1760 cfgPR10/bit2" (Enable HD mode on IPC))

### Program file format

The file format for each external I/O device is as follows:

(1) NC memory (Creates program on NC)

```
(COMMENT) ;
G28XYZ ;
  :
  :
M02 ;
%
```

| | |
|---|---|
| End of record (EOR, %) | The end of record (EOR, %) is automatically added.<br>It does not need to be input purposely. |
| Program No. (O No.) | Not necessary. |
| File transfer | When multiple programs within the NC memory are transferred to an external device as serial, they will be integrated into one file in the external device.<br>When a file containing multiple programs in an external device is transferred to NC memory as serial, it will be divided into one file per one program. |

(2) External device (except for serials such as SD card and USB memory)

| [Single program] | [Multiple programs] |
|---|---|
| CRLF<br>(COMMENT) CRLF<br>G28 XYZ CRLF<br>:<br>:<br>M02 CRLF<br>% ^Z | CRLF<br>O100(COMMENT) CRLF<br>G28 XYZ CRLF<br>:<br>:<br>M02 CRLF<br>O101(COMMENT1) CRLF<br>:<br>M02 CRLF<br>% ^Z |

| | |
|---|---|
| End of record (EOR, %) | The first line (from % to LF, or CR LF) will be skipped. Also, the content after the second % will not be transferred.<br>"%" must be included in the first line because if not, the necessary information when transferring a file to an NC memory cannot be transferred. |
| Program No. (O No.) | O No. before (COMMENT) will be ignored and the file name will be given the priority. |
| File transfer | Multiple programs cannot be transfered or collated between the serial-connected device and the external devices except for the serial connection.<br>When a file containing multiple programs in an external device is transferred to NC memory as serial, it will be divided into one file per one program.<br>When transferring divided programs one by one from an external device, which is not serial, (multiple programs) to an NC memory, the head program name can be omitted like "(COMMENT)" only when the transferring destination file name is designated to the file name field of device B. |
| Program name | Program name should be designated with up to 32 alphanumeric characters (29 characters for a multi-part system program). |
| End of block (EOB, ;) | When the I/O parameter "CR output" is set to "1", EOB becomes CRLF. |

(3) External device (serial)

```
% LF
O100(COMMENT) LF
G28 XYZ LF
 :
 :
M02 LF
%
```

| | |
|---|---|
| End of record (EOR, %) | The first line (from % to LF, or CR LF) will be skipped. Also, the content after the second % will not be transferred.<br>"%" must be included in the first line because if not, the necessary information when transferring a file to an NC memory cannot be transferred. |
| File transfer | Multiple programs cannot be transfered or collated between the serial-connected device and the external devices except for the serial connection.<br>When transferring a file as serial, the head program name can be omitted like "(COMMENT)" only when the transferring destination file name is designated to the file name field of device B. |
| Program name | Program name should be designated with up to 32 alphanumeric characters (29 characters for a multi-part system program). |
| End of block (EOB, ;) | When the I/O parameter "CR output" is set to "1", EOB becomes CRLF. |

### Character code of machining program

Chinese characters or the characters with umlaut symbol such as "ü" can be used in the messages of system variables #3000 and #3006. Since it cannot be input on the NC edit screen, create it with a general text editor.
Use the character code corresponding to the display language (parameter "#1043 lang").
Messages with character codes which do not correspond to the display language cause character corruption.

| #1043 lang | | Character code |
|---|---|---|
| 0 | English | Windows-1252 |
| 1 | Japanese | Shift-JIS |
| 11 | German | Windows-1252 |
| 12 | French | Windows-1252 |
| 13 | Italian | Windows-1252 |
| 14 | Spanish | Windows-1252 |
| 15 | Chinese (traditional) | Big5 |
| 16 | Korean (Hangeul) | KS C 5601-1987 |
| 17 | Portugese | Windows-1252 |
| 18 | Dutch | Windows-1252 |
| 19 | Swedish | Windows-1252 |
| 20 | Hungarian | Windows-1250 |
| 21 | Polish | Windows-1250 |
| 22 | Chinese (simplified) | GB2312 |
| 23 | Russian | Windows-1251 |
| 24 | Turkish | CP1254 |
| 25 | Czech | Windows-1250 |
| 31 | Indonesian | Windows-1252 |

# 3.3 Optional Block Skip

## 3.3.1 Optional Block Skip; /

### Function and purpose

This function selectively ignores a section of a machining program from a "/" (slash code) to the end of the block.

### Detailed description

Provided that the optional block skip switch is ON, a section of a machining program from a "/" to the end of the block are ignored. They are executed if the switch is OFF.
Parity check is valid regardless of whether the optional block skip switch is ON or OFF.
When, for instance, all blocks are to be executed for one workpiece but specific blocks are not to be executed for another workpiece, one machining program can be used to machine different parts by inserting the "/" into those specific blocks.

### Program example

(1) When the parameter "#1274 ext10/bit4" is set to "0" and the parameter "#1226 aux10/bit1" is set to "0":

A "/" placed in the middle of a block is always interpreted as a division instruction regardless of whether or not the optional block skip signal state is ON or OFF.

```
G00 X0. Z0.;
#101 = [ 100. / 4 ] ;      Sets "25." to #101. (As the result of execution of a division instruction)
G00 Z[ 100. / 4 ] ;        Moves Z axis to "25.". (As the result of execution of a division instruction)
#102 = 100. / #101 ;       Sets "4." to #102. (As the result of execution of a division instruction)
M30 ;
```

(2) When the parameter "#1274 ext10/bit4" is set to "0" and the parameter "#1226 aux10/bit1" is set to "1":

A "/" placed in a bracketed ("[ ]") expression is interpreted as a division instruction.
As for a "/" that appears in any other contexts, the section of the block following the "/" will be skipped if the optional skip signal is ON, and the "/" itself will be ignored if the optional skip signal is OFF.

<Operation example of a case when optional block skip signal is ON>

```
G00 X0. Z0.;
#101 = [ 100. / 4 ] ;      Sets "25." to #101. (As the result of execution of a division instruction)
G00 X100. / Z200. ;        Moves X axis to "100. No Z axis movements made. (As the result of skipping the
                           section of the block after "/")
G00 Z[ 100. / 4 ] ;        Moves Z axis to "25.". (As the result of execution of a division instruction)
#102 = 100. / #101 ;       Sets "100." to #102. (As the result of skipping the section of the block after "/")
M30 ;
```

<Operation example of a case when optional block skip signal is OFF>

```
G00 X0. Z0.;
#101 = [ 100. / 4 ] ;      Sets "25." to #101. (As the result of execution of a division instruction)
G00 X100. / Z200. ;        Moves X axis to "100." and Z axis to "200.". (As the result of ignoring "/")
G00 Z[ 100. / 4 ] ;        Moves Z axis to "25.". (As the result of execution of a division instruction)
#102 = 100. / #101 ;       Program error (P242) occurs. (As the result of ignoring "/")
M30 ;
```

(3) When the parameter "#1274 ext10/bit4" is set to "1" :

When a "/" is placed in a bracketed expression or when an expression that includes a "/" is on the right side of an equation, the "/" is interpreted as a division instruction.
As for a "/" that appears in any other contexts, the section of the block following the "/" will be skipped if the optional skip signal is ON, and the "/" itself will be ignored if the optional skip signal is OFF.

<Operation example of a case when optional block skip signal is ON>

```
G00 X0. Z0.;
#101 = [ 100. / 4 ] ;      Sets "25." to #101. (As the result of execution of a division instruction)
G00 X100. / Z200. ;        Moves X axis to "100. No Z axis movements made. (As the result of skipping the
                           section of the block after "/")
G00 Z[ 100. / 4 ] ;        Moves Z axis to "25.". (As the result of execution of a division instruction)
#102 = 100. / #101 ;       Sets "4." to #102. (As the result of execution of a division instruction)
M30 ;
```

<Operation example of a case when optional block skip signal is OFF>

```
G00 X0. Z0.;
#101 = [ 100. / 4 ] ;      Sets "25." to #101. (As the result of execution of a division instruction)
G00 X100. / Z200. ;        Moves X axis to "100." and Z axis to "200.". (As the result of ignoring "/")
G00 Z[ 100. / 4 ] ;        Moves Z axis to "25.". (As the result of execution of a division instruction)
#102 = 100. / #101 ;       Sets "4." to #102. (As the result of execution of a division instruction)
M30 ;
```

## Precautions

(1) When the parameter "#1274 ext10/bit4" is set to "0" and parameter "#1226 aux10/bit1" is set to "0", put the "/" code for optional block skip at the beginning of a block. If it is placed inside the block, it is assumed as a user macro, a division instruction.

(Example)

N20 G01 X25. /Z25. ; NG (User macro, a division instruction; a program error results.)

/N20 G01 X25. Z25. ; OK

When parameter "#1274 ext10/bit4" = "0" and parameter "#1226 aux10/bit1" = "1", a "/" placed in the middle of a block functions as a starting point of the optional skip.
To use a "/" as a division instruction, bracket (enclose in square brackets) the formula containing a slash code.

(2) A space immediately followed by a "/" at the very beginning of a block is always regarded as equal to a "/" at the head of a block regardless of the value set in parameter "#1226 aux10/bit1".

(3) The optional block skip is processed immediately before the pre-read buffer.
Consequently, it is not possible to skip up to the block which has been read into the pre-read buffer.

(4) This function is valid even during a sequence number search.

(5) All blocks with the "/" code are also input and output during tape storage and tape output, regardless of the position of the optional block skip switch.

## 3.3.2 Optional Block Skip Addition ; /n

### Function and purpose

Whether the block with "/n (n:1 to 9)" (slash) is executed during automatic operation and searching is selected.
By using the machining program with "/n" code, different parts can be machined by the same program.

### Detailed description

The block with "/n" (slash) code is skipped when the "/n" is programmed to the head of the block and the optional block skip n signal is turned ON. For a block with the "/n" code inside the block (not at the head of the block), the program is operated according to the value of the parameter "#1226 aux10/bit1" setting.
When the optional block skip n signal is OFF, the block with "/n" is executed.

### Program example

(1) When the 2 parts like the figure below are machined, the following program is used. When the optional block skip 5 signal is ON, the part 1 is created. When the optional block skip 5 signal is OFF, the part 2 is created.

```
        N1 G54 ;
        N2 G90 G81 X50. Z-20. R3. F100 ;
/5      N3 X30. ;
        N4 X10. ;
        N5 G80 ;
        M02 ;
```

Part 1
Optional block skip 5 signal ON

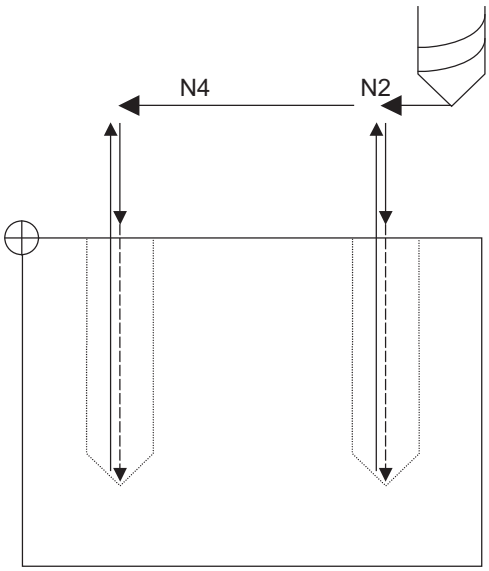


Part 2
Optional block skip 5 signal OFF

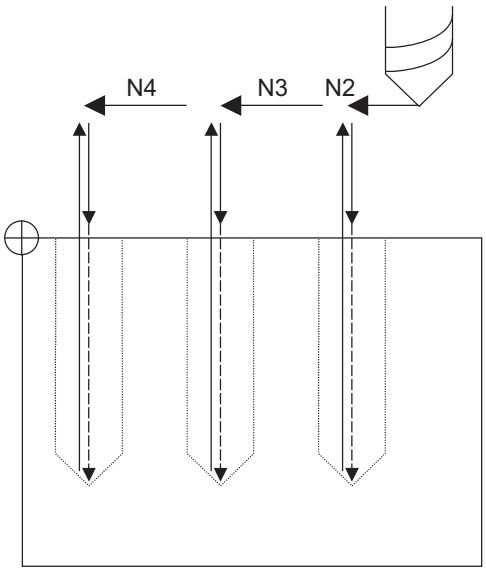

(2) When two or more "/n" codes are commanded at the head of the same block, the block will be ignored if either of the optional block skip n signals corresponding to the command is ON.

```
      N01 G90 Z3. M03 S1000 ;
/1/2  N02 G00 X50. ;
/1/2  N03 G01 Z-20. F100 ;
/1/2  N04 G00 Z3. ;
/1  /3  N05 G00 X30. ;
/1  /3  N06 G01 Z-20. F100 ;
/1  /3  N07 G00 Z3. ;
  /2/3  N08 G00 X10. ;
  /2/3  N09 G01 Z-20. F100 ;
  /2/3  N10 G00 Z3. ;
      N11 G28 X0 M05 ;
      N12 M02 ;
```

(a) Optional block skip 1 signal ON
(Optional block skip 2.3 signal OFF)
N01 -> N08 -> N09 -> N10 -> N11 -> N12

(b) Optional block skip 2 signal ON
(Optional block skip 1.3 signal OFF)
N01 -> N05 -> N06 -> N07 -> N11 -> N12

(c) Optional block skip 3 signal ON
(Optional block skip 1.2 signal OFF)
N01 -> N02 -> N03 -> N04 -> N11 -> N12

(3) When the parameter "#1226 aux10/bit1" is "1"and two or more "/n" are commanded inside the same block, the commands following "/n" in the block are ignored if either of the optional block skip n signals corresponding to the command is ON.

```
N01 G91 G28 X0.Y0.Z0.;
N02 G01 F1000;
N03 X1. /1 Y1. /2 Z1.;
N04 M30;
```

N03 block will operate as follows.
(a) Optional block skip 1 signal ON
Optional block skip 2 signal OFF
"Y1. Z1." is ignored.
(b) Optional block skip 1 signal OFF
Optional block skip 2 signal ON
"Z1." is ignored.

# 3.4 G Code

## 3.4.1 Modal, Unmodal

G codes define the operation modes of each block in programs.
G codes can be modal or unmodal command.
Modal commands always designate one of the G codes in the group as the NC operation mode. The operation mode is maintained until a cancel command is issued or other G code among the same group is commanded.
An unmodal command designates the NC operation mode only when it is issued. It is invalid for the next block.

When the specification of the program format switch function is provided, the G codes (G code system 1) of the M system are available.
For details, refer to "15.13 Program Format Switch; G188/G189".

## 3.4.2 G Code Lists

G codes include the six G code lists 2, 3, 4, 5, 6 and 7.

| cmdtyp | G code lists |
|---|---|
| 3 | 2 |
| 4 | 3 |
| 5 | 4 |
| 6 | 5 |
| 7 | 6 |
| 8 | 7 |

Here, G functions are explained using the G code list 3.

### 3.4.3 Table of G Code Lists

| G code lists | | | | | | Group | Function name | Section |
|---|---|---|---|---|---|---|---|---|
| Standard | | Special | | | | | | |
| 2 | 3 | 4 | 5 | 6 | 7 | | | |
| ΔG00 | ΔG00 | ΔG00 | ΔG00 | ΔG00 | ΔG00 | 01 | Positioning | 6.1 |
| ΔG0.5 | ΔG0.5 | ΔG0.5 | ΔG0.5 | | | 28 | Rapid traverse block overlap | 7.14 |
| ΔG01 | ΔG01 | ΔG01 | ΔG01 | ΔG01 | ΔG01 | 01 | Linear interpolation | 6.2 |
| G02 | G02 | G02 | G02 | G02 | G02 | 01 | Circular interpolation CW/Helical interpolation CW | 6.3<br>6.4<br>6.7 |
| G03 | G03 | G03 | G03 | G03 | G03 | 01 | Circular interpolation CCW/Helical interpolation CCW | 6.3<br>6.4<br>6.7 |
| G02.3 | G02.3 | G02.3 | G02.3 | G02.3 | G02.3 | 01 | Exponential interpolation CW | 6.11 |
| G03.3 | G03.3 | G03.3 | G03.3 | G03.3 | G03.3 | 01 | Exponential interpolation CCW | 6.11 |
| G04 | G04 | G04 | G04 | G04 | G04 | 00 | Dwell | 8.1<br>8.2 |
| | | | | | | | | |
| G05 | G05 | G05 | G05 | G05 | G05 | 00 | High-speed machining mode ON | 17.1 |
| | | | | | | | High-speed high-accuracy control II ON | 17.3 |
| G05.1 | G05.1 | G05.1 | G05.1 | G05.1 | G05.1 | 00 | High-speed high-accuracy control I ON | 17.3 |
| G07.1<br>G107 | G07.1<br>G107 | G07.1<br>G107 | G07.1<br>G107 | G07.1<br>G107 | G07.1<br>G107 | 19 | Cylindrical interpolation | 6.9 |
| G08 | G08 | G08 | G08 | G08 | G08 | 00 | High-accuracy control ON | 17.2 |
| G09 | G09 | G09 | G09 | G09 | G09 | 00 | Exact stop check | 7.11 |
| G10 | G10 | G10 | G10 | G10 | G10 | 00 | Data input by program<br>(Compensation input, Material shape input, Parameter input)<br>Tool life management data registration | 15.7<br><br>15.8 |
| G11 | G11 | G11 | G11 | G11 | G11 | 00 | Data input by program cancel<br>(Compensation input, Material shape input, Parameter input)<br>Tool life management data registration | 15.7<br><br>15.8 |
| G10.9 | G10.9 | G10.9 | G10.9 | G10.9 | G10.9 | 00 | Diameter/Radius designation switch | 5.2.2 |
| | | | | G12.1<br>G112 | G12.1<br>G112 | 19 | Polar coordinate interpolation ON | 6.10 |
| | | | | G13.1<br>G113 | G13.1<br>G113 | 19 | Polar coordinate interpolation cancel | 6.10 |
| G12.1 | G12.1 | G12.1 | G12.1 | | | 19 | Milling interpolation ON | 6.8 |
| *G13.1 | *G13.1 | *G13.1 | *G13.1 | | | 19 | Milling interpolation cancel | 6.8 |
| *G14 | *G14 | *G14 | *G14 | | | 18 | ● Balance cut OFF | 16.2 |
| G15 | G15 | G15 | G15 | | | 18 | ● Balance cut ON | 16.2 |
| G16 | G16 | G16 | G16 | | | 02 | Milling interpolation plane selection (Y-Z cylindrical plane) | 6.8.3 |
| ΔG17 | ΔG17 | ΔG17 | ΔG17 | ΔG17 | ΔG17 | 02 | X-Y plane selection | 6.5 |
| ΔG18 | ΔG18 | ΔG18 | ΔG18 | ΔG18 | ΔG18 | 02 | Z-X plane selection | 6.5 |
| ΔG19 | ΔG19 | ΔG19 | ΔG19 | ΔG19 | ΔG19 | 02 | Y-Z plane selection | 6.5 |
| ΔG20 | ΔG20 | ΔG20 | ΔG20 | ΔG20 | ΔG20 | 06 | Inch command | 5.3 |
| ΔG21 | ΔG21 | ΔG21 | ΔG21 | ΔG21 | ΔG21 | 06 | Metric command | 5.3 |
| G22 | G22 | G22 | G22 | | | 04 | Barrier check ON | 21.1 |
| *G23 | *G23 | *G23 | *G23 | | | 04 | Barrier check OFF | 21.1 |

| G code lists | | | | | | Group | Function name | Section |
|---|---|---|---|---|---|---|---|---|
| Standard | | Special | | | | | | |
| 2 | 3 | 4 | 5 | 6 | 7 | | | |
| | | | | G22 | G22 | 00 | Soft limit ON/Stored stroke check before travel ON | 21.2 |
| | | | | G23 | G23 | 00 | Soft limit OFF/Stored stroke check before travel OFF | 21.2 |
| | | | | | | | | |
| G26 | G26 | G26 | | | | 00 | Return to the selected point/Tapping retract | 15.14 |
| G27 | G27 | G27 | G27 | G27 | G27 | 00 | Reference position check | 20.14 |
| G28 | G28 | G28 | G28 | G28 | G28 | 00 | Automatic reference position return | 20.11 |
| G29 | G29 | G29 | G29 | G29 | G29 | 00 | Start position return | 20.11 |
| G30 | G30 | G30 | G30 | G30 | G30 | 00 | 2nd, 3rd and 4th reference position return | 20.12 |
| G30.1 | G30.1 | G30.1 | G30.1 | G30.1 | G30.1 | 00 | Tool exchange position return 1 | 20.13 |
| G30.2 | G30.2 | G30.2 | G30.2 | | | 00 | Tool exchange position return 2 | 20.13 |
| G30.3 | G30.3 | G30.3 | G30.3 | | | 00 | Tool exchange position return 3 | 20.13 |
| G30.4 | G30.4 | G30.4 | G30.4 | | | 00 | Tool exchange position return 4 | 20.13 |
| G30.5 | G30.5 | G30.5 | G30.5 | | | 00 | Tool exchange position return 5 | 20.13 |
| | | | | | | | | |
| G31 | G31 | G31 | G31 | G31 | G31 | 00 | Skip/Multi-step skip 2 | 22.2<br>22.5 |
| G31.1 | G31.1 | G31.1 | G31.1 | G31.1 | G31.1 | 00 | Multi-step skip 1-1 | 22.3 |
| G31.2 | G31.2 | G31.2 | G31.2 | G31.2 | G31.2 | 00 | Multi-step skip 1-2 | 22.3 |
| G31.3 | G31.3 | G31.3 | G31.3 | G31.3 | G31.3 | 00 | Multi-step skip 1-3 | 22.3 |
| G32 | G33 | G32 | G33 | G32 | G33 | 01 | Thread cutting | 6.6.1<br>6.6.2<br>6.6.3 |
| G34 | G34 | G34 | G34 | G34 | G34 | 01 | Variable lead thread cutting | 6.6.4 |
| G35 | G35 | G35 | G35 | G35 | G35 | 01 | Circular thread cutting CW | 6.6.5 |
| G36 | G36 | G36 | G36 | G36 | G36 | 01 | Circular thread cutting CCW | 6.6.5 |
| G37 | G37 | G36/<br>G37 | G36/<br>G37 | G36/<br>G37<br>G37.1<br>G37.2 | G36/<br>G37<br>G37.1<br>G37.2 | 00 | Automatic tool length measurement | 22.1 |
| | | | | | | | | |
| *G40 | *G40 | *G40 | *G40 | *G40 | *G40 | 07 | Tool nose radius compensation cancel | 12.4 |
| G41 | G41 | G41 | G41 | G41 | G41 | 07 | Tool nose radius compensation left | 12.4 |
| G42 | G42 | G42 | G42 | G42 | G42 | 07 | Tool nose radius compensation right | 12.4 |
| G46 | G46 | G46 | G46 | G46 | G46 | 07 | Tool nose radius compensation (automatic direction identification) ON | 12.4 |
| | | | | | | | | |
| G43.1 | G43.1 | G43.1 | G43.1 | G43.1 | G43.1 | 20 | 1st spindle control mode | 10.4.2 |
| G44.1 | G44.1 | G44.1 | G44.1 | G44.1 | G44.1 | 20 | 2nd spindle/Arbitrary spindle control mode | 10.4.2 |
| G47.1 | G47.1 | G47.1 | G47.1 | G47.1 | G47.1 | 20 | All spindles simultaneous control mode | 10.4.2 |
| | | | | | | | | |
| | | | | G50.2<br>G250 | G50.2<br>G250 | 00 | Tool spindle synchronization IB/IC cancel | 18.2.2 |
| | | | | G51.2<br>G251 | G51.2<br>G251 | 00 | Tool spindle synchronization IB/IC ON | 18.2.2 |
| G52 | G52 | G52 | G52 | G52 | G52 | 00 | Local coordinate system setting | 20.5 |
| G53 | G53 | G53 | G53 | G53 | G53 | 00 | Basic machine coordinate system selection | 20.3 |
| G53.1 | G53.1 | G53.1 | G53.1 | | | 00 | Tool axis direction control | 19.2 |
| *G54 | *G54 | *G54 | *G54 | *G54 | *G54 | 12 | Workpiece coordinate system selection 1 | 20.6 |

| G code lists | | | | | | Group | Function name | Section |
|---|---|---|---|---|---|---|---|---|
| Standard | | Special | | | | | | |
| 2 | 3 | 4 | 5 | 6 | 7 | | | |
| G55 | G55 | G55 | G55 | G55 | G55 | 12 | Workpiece coordinate system selection 2 | 20.6 |
| G56 | G56 | G56 | G56 | G56 | G56 | 12 | Workpiece coordinate system selection 3 | 20.6 |
| G57 | G57 | G57 | G57 | G57 | G57 | 12 | Workpiece coordinate system selection 4 | 20.6 |
| G58 | G58 | G58 | G58 | G58 | G58 | 12 | Workpiece coordinate system selection 5 | 20.6 |
| G59 | G59 | G59 | G59 | G59 | G59 | 12 | Workpiece coordinate system selection 6 | 20.6 |
| G54.1 | G54.1 | G54.1 | G54.1 | G54.1 | G54.1 | 12 | Work coordinate system selection 48 sets expanded | 20.6 |
| G61 | G61 | G61 | G61 | G61 | G61 | 13 | Exact stop check mode | 7.12 |
| G61.1 | G61.1 | G61.1 | G61.1 | G61.1 | G61.1 | 13 | High-accuracy control ON | 17.2 |
| | | | | | | | | |
| G62 | G62 | G62 | G62 | G62 | G62 | 13 | Automatic corner override | 7.15.1 |
| G63 | G63 | G63 | G63 | G63 | G63 | 13/19 | Tapping mode | 7.16 |
| *G64 | *G64 | *G64 | *G64 | *G64 | *G64 | 13/19 | Cutting mode | 7.17 |
| G65 | G65 | G65 | G65 | G65 | G65 | 00 | User macro simple call | 14.4.1 |
| G66 | G66 | G66 | G66 | G66 | G66 | 14 | User macro modal call A | 14.4.2 |
| G66.1 | G66.1 | G66.1 | G66.1 | G66.1 | G66.1 | 14 | User macro modal call B | 14.4.3 |
| *G67 | *G67 | *G67 | *G67 | *G67 | *G67 | 14 | User macro modal call cancel | 14.4.2<br>14.4.3 |
| G68 | G68 | G68 | G68 | | | 15 | Mirror image for facing tool posts ON | 15.10 |
| G69 | G69 | G69 | G69 | | | 15 | Mirror image for facing tool posts cancel | 15.10 |
| | | | | G68 | G68 | 15 | Mirror image for facing tool posts ON<br>Balance cut mode ON | 15.10<br>16.2 |
| | | | | *G69 | *G69 | 15 | Mirror image for facing tool posts cancel<br>Balance cut mode cancel | 15.10<br>16.2 |
| G68.1 | G68.1 | G68.1 | G68.1 | G68.1 | G68.1 | 16 | Coordinate rotation by program ON<br>3-dimensional coordinate conversion mode ON | 20.10<br>20.9 |
| G68.2 | G68.2 | G68.2 | G68.2 | G68.2 | G68.2 | 16 | Inclined surface machining | 19.1 |
| G69.1 | G69.1 | G69.1 | G69.1 | G69.1 | G69.1 | 16 | Coordinate rotation by program cancel<br>3-dimensional coordinate conversion mode OFF<br>Inclined surface machining cancel<br>Simple inclined surface control cancel | 20.10<br>20.9<br>19.1<br>19.2 |
| | | | | | | | | |
| G70 | G70 | G70 | G70 | G70 | G70 | 09 | Finishing cycle | 13.3.4 |
| G71 | G71 | G71 | G71 | G71 | G71 | 09 | Longitudinal rough cutting cycle | 13.3.1 |
| G72 | G72 | G72 | G72 | G72 | G72 | 09 | Face rough cutting cycle | 13.3.2 |
| G73 | G73 | G73 | G73 | G73 | G73 | 09 | Formed material rough cutting cycle | 13.3.3 |
| G74 | G74 | G74 | G74 | G74 | G74 | 09 | End face cut-off cycle | 13.3.5 |
| G75 | G75 | G75 | G75 | G75 | G75 | 09 | Longitudinal cut-off cycle | 13.3.6 |
| G76 | G76 | G76 | G76 | G76 | G76 | 09 | Compound type thread cutting cycle<br>● Multi-part system simultaneous thread cutting cycle parameter setting command | 13.3.7<br>16.6.1 |
| G76.1 | G76.1 | G76.1 | G76.1 | G76.1 | G76.1 | 09 | ● Multi-part system simultaneous thread cutting cycle I | 16.6.2<br>16.7 |
| G76.2 | G76.2 | G76.2 | G76.2 | G76.2 | G76.2 | 09 | ● Two-part system simultaneous thread cutting cycle II | 16.6.3<br>16.7 |
| | | | | | | | | |
| G90 | G77 | G90 | G77 | G90 | G77 | 09 | Longitudinal cutting fixed cycle | 13.1.1 |

| G code lists | | | | | | Group | Function name | Section |
|---|---|---|---|---|---|---|---|---|
| Standard | | Special | | | | | | |
| 2 | 3 | 4 | 5 | 6 | 7 | | | |
| G92 | G78 | G92 | G78 | G92 | G78 | 09 | Thread cutting fixed cycle | 13.1.2 |
| G94 | G79 | G94 | G79 | G94 | G79 | 09 | Face cutting fixed cycle | 13.1.3 |
| | | | | | | | | |
| *G80 | *G80 | *G80 | *G80 | *G80 | *G80 | 09 | Fixed cycle for drilling cancel | 13.5<br>13.5.7<br>13.6 |
| G81 | G81 | G81 | G81 | G81 | G81 | 09 | Fixed cycle (drill/spot drill) | 13.6<br>13.6.1 |
| G82 | G82 | G82 | G82 | G82 | G82 | 09 | Fixed cycle (drill/counter boring) | 13.6<br>13.6.2 |
| G79 | G83.2 | G79 | G83.2 | G79 | G83.2 | 09 | Deep hole drilling cycle 2 | 13.5.4 |
| G83 | G83 | G83 | G83 | G83 | G83 | 09 | Deep hole drilling cycle (Z axis) | 13.5<br>13.5.1 |
| G83.1 | G83.1 | G83.1 | G83.1 | G83.1 | G83.1 | 09 | Stepping cycle | 13.6<br>13.6.4 |
| G84 | G84 | G84 | G84 | G84 | G84 | 09 | Tap cycle (Z axis) | 13.5<br>13.5.2 |
| G85 | G85 | G85 | G85 | G85 | G85 | 09 | Boring cycle (Z axis) | 13.5<br>13.5.3 |
| | | | | | | | | |
| G87 | G87 | G87 | G87 | G87 | G87 | 09 | Deep hole drilling cycle (X axis) | 13.5<br>13.5.1 |
| G88 | G88 | G88 | G88 | G88 | G88 | 09 | Tap cycle (X axis) | 13.5<br>13.5.2 |
| G89 | G89 | G89 | G89 | G89 | G89 | 09 | Boring cycle (X axis) | 13.5<br>13.5.3 |
| G84.1 | G84.1 | G84.1 | G84.1 | G84.1 | G84.1 | 09 | Reverse tapping cycle (Z axis) | 13.5.2 |
| G84.2 | G84.2 | G84.2 | G84.2 | G84.2 | G84.2 | 09 | Synchronous tapping cycle | 13.6<br>13.6.6 |
| G88.1 | G88.1 | G88.1 | G88.1 | G88.1 | G88.1 | 09 | Reverse tapping cycle (X axis) | 13.5.2 |
| | | | | | | | | |
| ΔG190 | ΔG90 | ΔG190 | ΔG90 | ΔG190 | ΔG90 | 03 | Absolute command | 5.1 |
| ΔG191 | ΔG91 | ΔG191 | ΔG91 | ΔG191 | ΔG91 | 03 | Incremental command | 5.1 |
| G50 | G92 | G50 | G92 | G50 | G92 | 00 | Spindle clamp speed setting<br>Coordinate system setting | 10.3<br>20.4 |
| G50.3 | G92.1 | G50.3 | G92.1 | G50.3 | G92.1 | 00 | Workpiece coordinate system preset | 20.8 |
| ΔG96 | ΔG96 | ΔG96 | ΔG96 | ΔG96 | ΔG96 | 17 | Constant surface speed control ON | 10.2 |
| ΔG97 | ΔG97 | ΔG97 | ΔG97 | ΔG97 | ΔG97 | 17 | Constant surface speed control cancel | 10.2 |
| ΔG98 | ΔG94 | ΔG98 | ΔG94 | ΔG98 | ΔG94 | 05 | Feed per minute (asynchronous feed) | 7.4 |
| ΔG99 | ΔG95 | ΔG99 | ΔG95 | ΔG99 | ΔG95 | 05 | Feed per revolution (synchronous feed) | 7.4 |
| - | *G98 | - | *G98 | - | *G98 | 10 | Fixed cycle (Initial level return) | 13.5<br>13.5.9 |
| - | G99 | - | G99 | - | G99 | 10 | Fixed cycle (R point level return) | 13.5<br>13.5.9 |
| G110 | G110 | G110 | G110 | | | 00 | ● Cross axis control | 16.3 |
| G111 | G111 | G111 | G111 | G111 | G111 | 00 | Axis name switch | 15.9 |
| G113<br>G113.1 | G113<br>G113.1 | G113<br>G113.1 | G113<br>G113.1 | <br>G113.1 | <br>G113.1 | 00 | Spindle synchronization I cancel<br>Spindle superimposition control cancel | 18.1.1<br>18.4 |

| G code lists | | | | | | Group | Function name | Section |
|---|---|---|---|---|---|---|---|---|
| Standard | | Special | | | | | | |
| 2 | 3 | 4 | 5 | 6 | 7 | | | |
| G113<br>G113.1 | G113<br>G113.1 | G113<br>G113.1 | G113<br>G113.1 | | | 00 | Tool spindle synchronization IA (Spindle - Spindle, Polygon) mode cancel | 18.2.1 |
| G113<br>G113.1 | G113<br>G113.1 | G113<br>G113.1 | G113<br>G113.1 | G80.4<br>G113.1 | G80.4<br>G113.1 | 00 | Tool spindle synchronization II (Hobbing) cancel | 18.3.1 |
| G114.1 | G114.1 | G114.1 | G114.1 | G114.1 | G114.1 | 00 | Spindle synchronization I | 18.1.1 |
| G114.2 | G114.2 | G114.2 | G114.2 | | | 00 | Tool spindle synchronization IA (Spindle - Spindle, Polygon) mode ON | 18.2.1 |
| G114.3 | G114.3 | G114.3 | G114.3 | G81.4 | G81.4 | 00 | Tool spindle synchronization II (Hobbing) ON | 18.3.1 |
| | | | | | | | | |
| G115 | G115 | G115 | G115 | G115 | G115 | 00 | ● Start point designation timing synchronization Type 1 | 16.1.2 |
| G116 | G116 | G116 | G116 | G116 | G116 | 00 | ● Start point designation timing synchronization Type 2 | 16.1.3 |
| G117 | G117 | G117 | G117 | G117 | G117 | 00 | ● M code output during axis traveling | 9.4 |
| | | | | | | | | |
| G120.1 | G120.1 | G120.1 | G120.1 | G120.1 | G120.1 | 00 | Machining condition selection I | 17.4 |
| G121 | G121 | G121 | G121 | G121 | G121 | 00 | Machining condition selection I cancel | 17.4 |
| G122 | G122 | G122 | G122 | G153 | G153 | 00 | Activate sub part system I | 16.9.1 |
| G125 | G125 | G125 | G125 | | | 00 | ● Control axis synchronization between part systems | 16.5 |
| G126 | G126 | G126 | G126 | G126 | G126 | 00 | ● Control axis superimposition | 16.4.1 |
| G127 | G127 | G127 | G127 | G127 | G127 | 00 | Prohibits the reverse run in all part systems | 15.6 |
| G140 | G140 | G140 | G140 | G165 | G165 | 00 | Arbitrary axis exchange command | 16.3.2 |
| G141 | G141 | G141 | G141 | G166 | G166 | 00 | Arbitrary axis exchange return command | 16.3.2 |
| G142 | G142 | G142 | G142 | G167 | G167 | 00 | Arbitrary axis exchange/reference axis arrange return command | 16.3.2 |
| G144 | G144 | G144 | G144 | G154 | G154 | 00 | Activate sub part system II | 16.9.2 |
| G145 | G145 | G145 | G145 | G155 | G155 | 00 | Cancel sub part systems I and II | 16.9 |
| G156 | G156 | G156 | G156 | | | 00 | ● Arbitrary axis superimposition | 16.4.2 |
| G160 | G160 | G160 | G160 | G160 | G160 | 00 | Torque limitation skip | 22.6 |
| G162 | G162 | G162 | G162 | | | 00 | Spindle speed fluctuation detection | 10.6 |
| G163 | G163 | G163 | G163 | | | 00 | Spindle speed fluctuation detection cancel | |
| G164 | G164 | G164 | G164 | G164 | G164 | 00 | Spindle superimposition control | 18.4 |
| G174 | G174 | G174 | G174 | | | 08 | Simple tool center point control | 19.2 |
| G175 | G175 | G175 | G175 | | | 08 | Simple tool center point control cancel | 19.2 |
| G176 | G176 | G176 | G176 | | | 16 | Simple inclined surface control | 19.2 |
| G180 | G180 | G180 | G180 | G180 | G180 | 00 | Interactive cycle insertion program | 15.11 |
| G185 | G185 | G185 | G185 | | | 09 | Hole edge chamfering cycle | 13.5.6 |
| G186 | G186 | G186 | G186 | G186 | G186 | 00 | Interference check III interfering object data enable command | 21.3 |
| G187 | G187 | G187 | G187 | G187 | G187 | 09 | Thread milling cycle | 13.5 |
| G188 | G188 | G188 | G188 | G188 | G188 | 24 | Change to the G code system in the machining center system (G code system 1) (However, equivalent to parameter "#1037 cmdtyp" = 2) | 15.13 |
| G189 | G189 | G189 | G189 | G189 | G189 | 24 | Change to the G code system in the lathe system (G code system determined by parameter "#1037 cmdtyp") | 15.13 |

## Precautions

(1) A program error (P34) will occur if a G code unlisted on the Table of G code lists is commanded.

(2) An alarm will occur if a G code without additional specifications is commanded.

(3) An (*) symbol indicates the G code to be selected in each group when the power is turned ON or when a reset is executed to initialize the modal.

(4) A (Δ) symbol indicates the G code for which parameters selection is possible as an initialization status when the power is turned ON or when a reset is executed to initialize the modal. Note that inch/metric changeover can only be selected when the power is turned ON.

(5) A (●) symbol indicates a function dedicated for multi-part system.

(6) If two or more G codes from the same group are commanded in a block, the last G code will be valid.

(7) The table of G code lists is a list of conventional G codes. Depending on the machine, movements that differ from the conventional G commands may be included when called by the G code macro. Refer to the instruction manual issued by the MTB.

(8) Whether the modal is initialized or not depends on each reset input.

- "Reset 1"
  The modal is initialized when the reset initialization parameter (#1151 rstinit) is ON. (This depends on the MTB specifications.)
- "Reset 2" and "Reset & rewind"
  The modal is initialized when the signal is input.
- Reset at emergency stop release
  Conforms to "Reset 1".
- When modal is automatically reset at the start of individual functions such as reference position return
  Conforms to "Reset & rewind".

### Precautions for G code lists 6 and 7

(1) G68, G69

When both the mirror image for facing tool posts function and balance cut function are valid, G68 and G69 will be handled as the command to turn the mirror image for facing tool posts ON/OFF.
(The mirror image for facing tool posts has the priority.)

(2) G36

G36 is used for the two functions, automatic tool length measurement and circular thread cutting (CCW). Which function to be applied depends on the MTB specifications (parameter "#1238 set10/bit0" (circular thread cutting)).

When "#1238 set10/bit0" is set to "0"

| G code | Function |
|---|---|
| G35 | Circular thread cutting clockwise (CW) |
| G36 | Automatic tool length measurement X |
| G37 | Automatic tool length measurement Z |

When "#1238 set10/bit0" is set to "1"

| G code | Function |
|---|---|
| G35 | Circular thread cutting clockwise (CW) |
| G36 | Circular thread cutting counterclockwise (CCW) |
| G37 | Automatic tool length measurement Z |

**⚠ CAUTION**

**⚠ The commands with "no value after G" will be handled as "G00".**

## 3.5 Precautions before Starting Machining

**⚠ CAUTION**

**⚠ When creating the machining program, select the appropriate machining conditions, and make sure that the performance, capacity and limits of the machine and NC are not exceeded. The examples do not take into account the machining conditions.**

**⚠ Before starting actual machining, always carry out a graphic check, a dry run operation, and a single block operation to check the machining program, tool offset amount, workpiece offset amount, etc.**

# 4

# Pre-read Buffer

# 4.1 Pre-read Buffer

### Function and purpose

During automatic processing, the contents of one block ahead are normally pre-read so that program analysis processing is conducted smoothly. However, during tool nose radius compensation, a maximum of 5 blocks are pre-read for the intersection point calculation including interference check.

### Detailed description

The specifications of pre-read buffers in 1 block are as follows:

(1) The data of 1 block is stored in this buffer.

(2) When comments and the optional block skip function is ON, the data extending from the "/" (slash) code up to the EOB code are not read into the pre-read buffer.

(3) The pre-read buffer contents are cleared with resetting.

(4) When the single block function is ON during continuous operation, the pre-read buffer stores the next block's data and then stops operation.

(5) The way to prohibit the M command which operates the external controls from pre-reading, and to make it to recalculate, is as follows:
Identify the M command which operates the external controls by a PLC, and turn on the "recalculation request" on PLC output signal. (When the "recalculation request" is turned ON, the program that has been pre-read is recalculated.)
These operations depend on the MTB specifications.

### Precautions

(1) Depending on whether the program is executed continuously or by single blocks, the timing of the validation/invalidation of the PLC signals, including optional block skip, will differ.

(2) If the PLC signal such as optional block skip is turned ON/OFF with the M command, the PLC control operation will not be effective for the program pre-read with the buffer register.

# 5

# Position Commands

# 5.1 Absolute Command/Incremental Command; G90, G91

## Function and purpose

There are two methods of issuing tool movement amount commands: the absolute command method, and the incremental command method.
In the absolute command method, the commands are issued using the distance from the coordinate zero point. Whereas in the incremental command method, the commands are issued using the distance from the present point.
To select these methods, use an axis address or a G command. Whether an axis address or a G command is valid can be selected according to the parameter setting. (MTB specifications)
The following figure shows what happens when the tool is moved from point P1 to point P2.

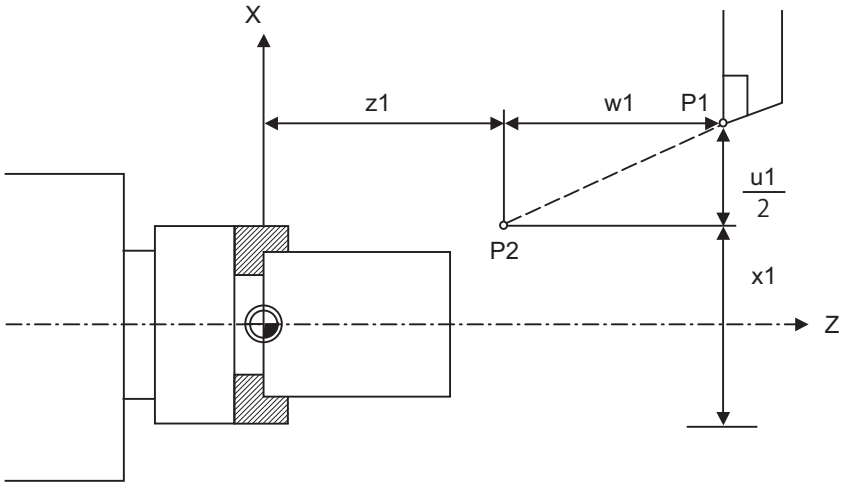


(1) Movement command by an axis address (when "#1076 AbsInc" is "1")
Absolute command G00 Xx1 Zz1 ;
Incremental command G00 Uu1 Ww1 ;

(2) Movement command by G command (when "#1076 AbsInc" is "0")
Absolute command G90 G00 Xx1 Zz1 ;
Incremental command G91 G00 Xu1 Zw1 ;

## Command format

### Absolute command

```
G90 ;
```

### Incremental command

```
G91 ;
```

When the parameter "#1076 AbsInc" is set to "0", a G command selects either the absolute command or incremental command.
After commanding G90/G91, coordinates will be commanded with absolute command or incremental command.

## Detailed description

### Selection of absolute command or incremental command by an axis address

When the parameter "#1076 AbsInc" is set to "1", an axis address selects either the absolute command or incremental command.

(1) The correspondence between addresses and axes depends on the settings of the following parameters. (MTB specifications)

- #1013 axname
- #1014 incax

The following table shows an example of when "X,Z,C,Y" are set for "#1013 axname" and when "U,W,H,V" are set for "#1014 incax".

| | | Command method |
|---|---|---|
| Absolute command | X axis | Address X |
| | Z axis | Address Z |
| | C/Y axis | Address C/Y |
| Incremental command | X axis | Address U |
| | Z axis | Address W |
| | C/Y axis | Address H/V |

<Note>

- The C/Y axis is an example of additional axes.

(2) Absolute command and incremental command can be used together in the same block.
(Example) X__ W__ ; ... An absolute command for X axis and an incremental command for Z axis

## Precautions

(1) Designation of a circular radius (R) and center (I,J,K) is always conducted with the incremental position.

(2) When parameter "#1076 AbsInc" is "1", and H is used for the incremental command address, address H of blocks in M98, G114.2 will be handled as the parameter of the command, and the axis will not be moved.

# 5.2 Diameter Designation and Radius Designation

## 5.2.1 Diameter/Radius Designation

### Function and purpose

On a lathe, a workpiece rotates, so its coordinate positions, dimensions, and commands can be designated by radius/ diameter values. Commands using diameter values are called diameter designation, and commands with radius values are called radius designation.
Whether to use the radius designation or diameter designation depends on the MTB specifications (parameter "#1019 dia)"). The figure below shows the command procedure when the tool is to be moved from point P1 to point P2.

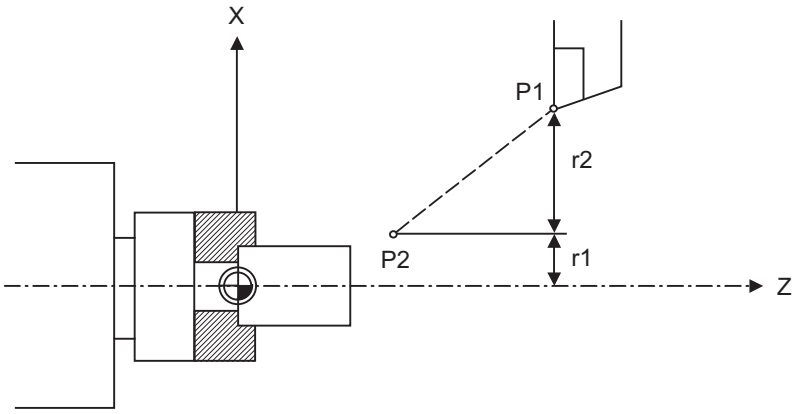


| X command | | U command | | Remarks |
|---|---|---|---|---|
| Radius | Diameter | Radius | Diameter | Even when a diameter designation has been selected, the U command can exclusively be changed into a radius designation depending on the MTB specifications (parameter "#1077 radius").<br><Note><br>♦"U"is an incremental command address. |
| X = r1 | X = 2 * r1 | U = r2 | U = 2 * r2 | |

### Precautions and restrictions

(1) In the above example, the tool moves from P1 to P2 in the minus direction of the X axis. So when this is using incremental command, the minus sign is given to the numerical value being commanded.

(2) In this manual, diameter commands are used in descriptions of both the X and U axes for the sake of convenience.

## 5.2.2 Diameter/Radius Designation Switch; G10.9

### Function and purpose

The method of commanding a travel distance (command with a diameter dimension/command with a radius dimension (as-is distance)) in a program is defined individually for each axis depending on MTB specifications (parameter "#1019 dia").
Diameter/Radius designation switch function, however, enables you to switch the diameter/radius designation of each axis using a G code at your desired timing. When you use the function to switch diameter/radius designation, it helps you create a program more flexibly according to each machining situation.

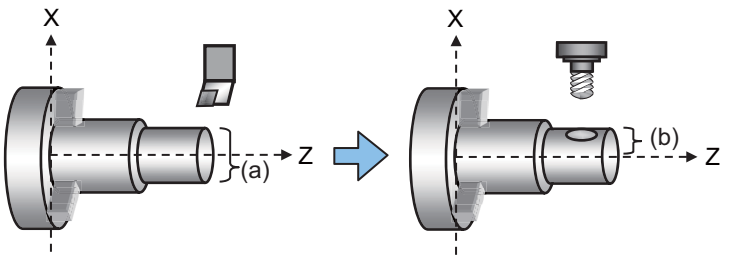


(a) Diameter designation (b) Radius designation

**Term**

| | |
|---|---|
| Diameter/Radius being switched | This refers to a condition where the diameter/radius selection of an axis is different from the power-ON state. |

### Command format

Diameter/Radius designation switch enables you to select any desired NC axis, excluding rotary axes, and switch the diameter/radius designation of the axis.

**Diameter/Radius designation switch**

| |
|---|
| **G10.9 Axis name 1__ Axis name 2__ ... Axis name n__ ;** |

| | |
|---|---|
| Axis name n | Axis name for which diameter/radius designation is switched.<br>Select radius or diameter designation with a value that follows the axis name.<br>0: Radius designation<br>1: Diameter designation<br>If you do not command any axis name, the diameter/radius designation statuses of all the axes of the part system are returned to the initial power-ON state. |

## Detailed description

(1) G10.9 is a non-modal command that belongs to Group 0.

(2) G10.9 is effective for all the G code lists.

(3) If G10.9 is commanded together with any other G code in a block, the program error (P33) occurs.

(4) For the axis name, specify the axis name that is set in "#1013 axname" or "#1014 incax" (*1). If the specified axis name is not found, a program error (P33) will occur.

(*1) The axis name set in "#1014 incax" can be specified only when the setting value of "#1076 AbsInc" is "1". These settings depend on the MTB specifications.

(5) If a rotary axis is specified with "Axis name", a program error (P32) occurs.

(6) If a number with a decimal point is specified with "Axis name", the fraction is ignored. If any value other than "0" or "1" is specified, the program error (P35) occurs. If specified with a variable, the fraction is rounded to the closest whole number.

(7) G10.9 switches the diameter/radius designation for programmed coordinates command and coordinates of counter in Monitor screen. However, diameter/radius designation is not switched for data including parameters, workpiece offsets, tool data and tool offsets.

(8) The axis specified for diameter/radius designation switch by G10.9 is effective until G10.9 is given again for switching or until Reset or Emergency stop is input. After the Reset or Emergency stop, the diameter/radius designation before G10.9 is restored.
However, when "#1255 set27/bit3" is set to "1", the diameter/radius designation status is held even if resetting is performed. (This parameter setting depends on the MTB specifications.)

(9) If diameter/radius designation switch is not performed for an axis in the part system of G10.9 command, the axis behaves as follows:
- The axis behaves according to the setting of "#1019 dia" for L system. This setting depends on the MTB specifications.
- The axis acts as radius-designation axis in the M system.

(10) Irrespective of the "#1019 dia" and "#1077 radius" settings, the designation selected by G10.9 has priority.

(11) If you use G10.9 to switch diameter/radius designation for two axes (X axis and Z axis) at a time, program the command as follows:
G10.9 X1 Z0;
In the example above, X axis is switched to diameter designation, and Z axis to radius designation.

## Relationship with other functions

(1) Restart search
If you perform restart search after a G10.9 block, the diameter/radius designation switched by G10.9 is applied.

(2) Arbitrary reverse run
If you perform reverse run for a G10.9 block, the reverse run stops at the G10.9 block, and is disabled for the prior blocks before the G10.9 block.

(3) Manual arbitrary reverse run
If you perform forward run for G10.9 block, the diameter/radius designation switched by G10.9 is applied. If you perform reverse run for a G10.9 block, the reverse run stops at the G10.9 block, and is disabled for the prior blocks before the G10.9 block.

(4) Chopping
G10.9 is unable to switch diameter/radius designation of a chopping axis. If G10.9 is given to an axis that is in chopping mode, or if you enable chopping mode for an axis for which diameter/radius designation is being switched by G10.9, the operation error (M01 0095) occurs.
If the alarm above has been caused by giving G10.9 to an axis that is in chopping mode, the chopping axis keeps moving.
Use the corresponding PLC signal or NC reset to stop the axis.

(5) Synchronous control
For a master or slave axis that is in synchronous operation, you can switch diameter/radius designation using G10.9.
Even when the diameter/radius designation status is different between master and slave axes, their synchronization will not fail. The coordinates displayed on Monitor screen are dependent on the diameter/radius designation of each axis.

(6) Mixed control I (cross control)
If a mixed control I command is given to an axis for which diameter/radius designation is being switched by G10.9, the program error (P503) occurs. If G10.9 is given to an axis that is in mixed control I, the program error (P705) occurs.

(7) Mixed control II (PLC signal method)
If a mixed control II is enabled for an axis for which diameter/radius designation is being switched by G10.9, the operation error (M01 1035) occurs. If G10.9 is given to an axis that is in mixed control II, the operation error (M01 0095) occurs.

(8) Arbitrary axis exchange control
The diameter/radius command switching for an axis in arbitrary axis exchange control mode depends on the MTB specifications(*1).

(*1) Parameters of the command address: "#12071 adr_abs[1]" - "#12078 adr_abs[8]", "#12079 adr_inc[1]" - "#12086 adr_inc[8]"

If an arbitrary axis exchange-related command (G140/G141/G142) has given in a part system, all the axes of the part system are returned to the initial status under the exchanged axis configuration after the axis exchange.

(9) Control axis synchronization between part systems I (Program command method)
If the control axis synchronization between part systems I is commanded to the axis for which diameter/radius designation is being switched by G10.9, a program error (P521) occurs. If G10.9 is given to the axis that is in the control axis synchronization between part systems I, the program error (P705) occurs.

(10) Control axis synchronization between part systems II (PLC signal method)
If the control axis synchronization between part systems II is enabled for an axis for which diameter/radius designation is being switched by G10.9, the operation error (M01 1037) occurs. If G10.9 is given to an axis that is in the control axis synchronization between part systems II, the operation error (M01 0095) occurs.

(11) Program format switch
In M system, the setting of "#1019 dia" is disabled, thus all the axes are treated as radius-designation axis. However, G10.9 enables a diameter-value command.
When you switch the program format, the diameter/radius designation is returned to the default state for all the axes of the part system.

(12) Axis name extension
Diameter/Radius designation switch with G10.9 is disabled for a name-extended axis.

(13) Manual arbitrary feed
If a position command in manual arbitrary feed is given, the diameter/radius axis setting of each axis at power ON is applied. Therefore, even if a manual arbitrary feed command is given to an axis in diameter/radius designation switch mode using the G10.9 command, the diameter/radius switch status is ignored.

(14) Cylindrical interpolation/Polar coordinate interpolation/Milling interpolation
The diameter/radius designation of each axis at which these functions are being executed follows the setting of "#8111 Milling Radius" without being affected by the G10.9 command.
When these functions are canceled, the setting returns to the diameter/radius axis designation that was valid before the functions are executed.
If G10.9 is commanded while these functions are being executed, a program error (P481) will occur.

(15) Control axis superimposition/Arbitrary axis superimposition control
If G10.9 command is given to a superimposition control-related axis (reference axis or superimposed axis), the program error (P705) occurs.
If a superimposition control command (reference axis or superimposed axis) is given to the axis for which diameter/radius designation is being switched, the program error (P706) occurs.

(16) Direct command mode
If G10.9 is given during the direct command mode, the program error (P33) occurs.

(17) Axis name switch
When an axis name switch command is given to an axis for which diameter/radius designation is being switched with G10.9, the axis name is switched, however, the diameter/radius designation is not switched.
When G10.9 is given to the axis whose name is being switched, diameter/radius designation is switched for the control axis that corresponds to the command axis name.

(18) Graphic check (2D/3D), Graphic trace
During graphic check or graphic trace, even if the diameter and radius are switched with G10.9, neither the drawing image nor coordinate value view is not switched.

(19) Sub part system control II
When the sub part system operation is completed at start-up by sub part system control II, the diameter/radius designation status switched in the sub part system is returned to the default.

### Program example

The table below shows program example that switches the X-axis diameter/radius designation with the diameter/radius designation switch command (G10.9) to perform milling after performing turning with the following parameter settings.

[Parameter setting]

| Parameters | Setting value of each axis | | |
|---|---|---|---|
| | X | Z | C |
| #1017 rot | 0 | 0 | 1 |
| #1019 dia | 1 | 0 | 0 |

[Machining program]

| Program | Description |
|---|---|
| N01 G28 X0. Z0. ; | Reference position return |
| N02 T0101 ; | Selects the turning tool |
| N03 S1000 M3 ; | 1st spindle forward rotation |
| N04 G54 G90 G00 Z100. ; | Approaches the workpiece |
| N05 X30. ; | |
| N06 G99 G01 Z40. F0.3 ; | Executes turning |
| N07 G0 X50. Z100.; | Escape |
| N08 M5 ; | 1st spindle stop |
| N09 G30.3 ; | Tool exchange position return |
| N10 T0202 ; | Select the milling tool |
| N11 M100 ; | Switches Spindle/C axis |
| **N12 G10.9 X0 ;** | Switches the X axis to the radius designation.(*1) |
| N13 G0 C0. ; | Index C axis |
| N14 G97 G94 S2=2000 M13; | 2nd spindle (tool spindle) forward rotation |
| N15 G87 X-5. Z70. Q5. F100 K1; | Executes drilling |
| N16 G28 X0. Z0. ; | Reference position return |
| N17 M15 ; | 2nd spindle stop |
| N18 M30 ; | (*2) |

(*1) After the N12 block was executed, the counter on the Monitor screen is switched. (The display is changed to the radius designation mode.)

(*2) After the program end was executed for the N18 block, the counter returns to the original setting value.
The counter value displayed on the Monitor screen varies depending on whether the diameter or radius is selected.

| | |
|---|---|
| Diameter designation axis | The "φ" symbol is displayed on the right of the axis name. |
| Radius designation axis | The coordinate value is half the diameter designation. |

## Precautions

(1) If diameter/radius designation is switched, the travel distance changes even though the command value is unchanged. Thus special care must be taken when creating or executing a machining program.

(2) Command the feedrate with the radius value regardless of whether the diameter designation or radius designation is selected. (This is applied to both the movement amount per rotation and that per minute.)

(3) Diameter/Radius designation is not switched for a value that is read or written using PLC window or system variables. For M system, it is treated as a radius value. For L system, the value follows the setting of "#1019 dia".

(4) When manual handle feed or incremental feed is performed at manual interruption, the switched diameter/radius designation is applied.

(5) In a G10.9 command block, the control confirms that all the axes of the part system are decelerated to a stop before switching the diameter/radius designation. If G10.9 is given between cutting blocks, it causes acceleration and deceleration, which may damage the workpiece. Thus make sure that the tool is away from the workpiece before giving G10.9.

(6) If a G10.9 command which has the same diameter/radius designation as the existing operation is given, the G10.9 command fails to be enabled. Thus if a G code that causes an error when combined with G10.9 is given together, no error occurs.

(7) Do not give "Start point designation timing synchronization" or "M code output during axis traveling" command to an axis for which diameter/radius designation is being switched. If commanded, it cannot be assured that the timing synchronization or the M code output is performed in the correct position.

(8) Do not perform manual tool length measurement I for an axis for which the diameter/radius designation is switched. The correct tool length cannot be measured for an axis for which the diameter/radius designation is switched.

# 5.3 Inch/Metric Conversion; G20, G21

## Function and purpose

The commands can be changed between inch and metric with the G20/G21 command.

## Command format

### Inch command

```
G20;
```

### Metric command

```
G21;
```

## Detailed description

The G20 and G21 commands merely select the command units. They do not select the Input units.
G20 and G21 selection is meaningful only for linear axes. It is invalid for rotation axes.

### Output unit, command unit and setting unit

The counter, parameter setting and display unit are determined by parameter "#1041 I_inch". The movement/speed command will be displayed as metric units when "#1041 I_inch" is ON during the G21 command mode. The internal unit metric data of the movement/speed command will be converted into an inch unit and displayed when "#1041 I_inch" is OFF during the G20 command mode. The command unit for when the power is turned ON and reset is decided by combining the parameters "#1041 I_inch", "#1151 rstint" and "#1210 RstGmd/bit5".
These parameter settings depend on the MTB specifications.

**NC axis**

| Item | Initial inch OFF (metric internal unit) #1041 I_inch=0 | | Initial inch ON (inch internal unit) #1041 I_inch=1 | |
|---|---|---|---|---|
| | G21 | G20 | G21 | G20 |
| Movement/speed command | Metric | Inch | Metric | Inch |
| Counter display | Metric | Metric | Inch | Inch |
| Speed display | Metric | Metric | Inch | Inch |
| User parameter setting/display | Metric | Metric | Inch | Inch |
| Workpiece/tool offset setting/display | Metric | Metric | Inch | Inch |
| Handle feed command | Metric | Metric | Inch | Inch |

**PLC axis**

| Item | #1042 pcinch=0 (metric) | #1042 pcinch=1 (inch) |
|---|---|---|
| Movement/speed command | Metric | Inch |
| Counter display | Metric | Inch |
| User parameter setting/display | Metric | Inch |

### Precautions

(1) The parameter and tool data will be input/output with the unit set by "#1041 I_inch".
If "#1041 I_inch" is not found in the parameter input data, the unit will follow the unit currently set to NC.

(2) The unit of read/write used in PLC window is fixed to metric unit regardless of a parameter and G20/G21 command modal.

(3) A program error (P33) will occur if G20/G21 command is issued in the same block as following G codes. Command in a separate block.
- G05 (High-speed machining mode)
- G7.1 (Cylindrical Interpolation)
- G12.1 (Polar coordinate interpolation)

# 5.4 Decimal Point Input

## Function and purpose

This function enables to input decimal points. It assigns the decimal point in millimeter or inch units for the machining program input information that defines the tool paths, distances and speeds.
Whether to apply minimum input command increment (type I) or zero point (type II) to the least significant digit of data without a decimal point depends on the MTB specifications (parameter "#1078 Decpt2").

## Detailed description

(1) The decimal point command is valid for the distances, angles, times and speeds in machining programs.

(2) Refer to the table "Addresses used and validity of decimal point commands" for details on the valid addresses for the decimal point commands.

(3) In decimal point command, the valid range of command value is as shown below. (When "#1015 cunit" (program input command) is "10".)

| | Movement command (linear) | Movement command (rotary) | Feedrate | Dwell |
|---|---|---|---|---|
| **Input unit [mm]** | -99999.999 to 99999.999 | -99999.999 to 99999.999 | 0.001 to 10000000.000 | 0 to 99999.999 |
| **Input unit [inch]** | -9999.9999 to 9999.9999 | | 0.0001 to 1000000.0000 | |

(4) The decimal point command is valid even for commands defining the variable data used in subprograms.

(5) Decimal point commands for decimal point invalid addresses are processed as an integer only data which everything after the decimal point is ignored. Decimal point invalid addresses include the followings; (D,H,L,M,N,O,P,S,T)
All variable commands, however, are treated as data with decimal points.

### Decimal point input I, II and decimal point command validity

Decimal point input I and II will result as follows when decimal points are not used in an address which a decimal point command is valid.
Both decimal point input I and II will produce the same result when a command uses a decimal point.

(1) Decimal point input I

The least significant digit of command data matches the command unit.

(Example) When "X1" is commanded in 1 μm system, the same result occurs as for an "X0.001" command.

(2) Decimal point input II

The least significant digit of command data matches the command unit.

(Example) When "X1" is commanded in 1 μm system, the same result occurs as for an "X1." command.

[Addresses used and validity of decimal point commands]

| Address | Decimal point command | Usage | Remarks |
|---|---|---|---|
| A | Valid | Coordinate position data | |
| | Invalid | 2nd miscellaneous function codes | |
| | Valid | Angle data | |
| | Invalid | MRC program No. | |
| | Invalid | Parameter input by program No. | |
| | Valid | Deep hole drilling cycle (2): Safety distance | |
| | Valid | Spindle synchronization: Acceleration/deceleration time constant | |
| | Valid | Tool spindle synchronization II: Workpiece axis phase shift amount (For G code lists 6 and 7) | |
| | Invalid | Program No. | |
| | Valid | Material shape input by program: Mounting angle | |
| | Invalid | Interactive cycle insertion: Cycle ID | |
| B | Valid | Coordinate position data | |
| | Invalid | 2nd miscellaneous function codes | |
| | Invalid | Sub part system I or sub part system II identification No. | |
| | Valid | Simple tool center point control: B-axis turning angle | |
| C | Valid | Coordinate position data | |
| | Invalid | 2nd miscellaneous function codes | |
| | Valid | Corner chamfering amount | ,C |
| | Valid | Tool compensation data input by program: Tool nose radius compensation amount (incremental) | |
| | Valid | Chamfering width (slitting cycle) | |
| | Invalid | Target C axis in C axis mode for spindle position control (spindle/C axis) | |
| | Invalid | Material shape input by program: Material shape | |
| D | Valid | Automatic tool length measurement: ZONE d | |
| | Invalid | Parameter input by program: Byte type data | |
| | Invalid | Spindle synchronization: Designation of synchronized spindle | |
| | Invalid | Multi-spindle control: Spindle designation | |
| | Invalid | Superimposed spindle designation at spindle superimposition | |
| | Invalid | Tool spindle synchronization IA: Workpiece axis selection (Synchronized spindle) | |
| | Invalid | Tool spindle synchronization IB: Rotary tool axis selection (Synchronized spindle) | |
| | Invalid | Tool spindle synchronization II: Hob axis selection | |
| | Invalid | Sub part system I or sub part system II: Synchronous control designation | |
| | Valid | Droop skip value | |
| | Valid | Material shape input by program: Material external diameter | |
| | Valid | Simple inclined surface control: Rotation angle | |
| | Invalid | Synchronous tap: Designation of spindle used in tapping cycle (modal) | |
| | Invalid | Subprogram device No. | ,D |
| E | Valid | Inch thread: number of ridges, precision thread: lead | |
| | Valid | Corner cutting feedrate | |
| | Valid | Material shape input by program: Material internal diameter | |
| | Valid | Synchronous tap: Cutting feedrate (Number of screw threads) | |
| | Invalid | 3-dimensional coordinate conversion: Command coordinate system selec-tion | ,E |
| | Invalid | Tool spindle synchronization IA: Rotation ratio designation (Rotary tool axis) | |
| | Invalid | Tool spindle synchronization II: Rotation ratio designation (Hob axis) (For G code lists 2 to 5) | |

| Address | Decimal point command | Usage | Remarks |
|---|---|---|---|
| F | Valid | Cutting feedrate, skip speed | |
| | Valid | Thread lead | |
| | Valid | Feedrate | ,F |
| | Invalid | Material shape input by program: Material color | |
| G | Valid | Preparatory function code | |
| H | Valid | Coordinate position data | |
| | Invalid | Sequence Nos. in subprograms | |
| | Invalid | Parameter input by program: Bit type data | |
| | Invalid | Selection of intersection point between line and circular arc (geometric) | |
| | Invalid | Spindle synchronization or spindle superimposition: Reference spindle designation | |
| | Invalid | Tool spindle synchronization IA: Rotary tool axis selection (Reference spindle) | |
| | Invalid | Tool spindle synchronization IB: Workpiece axis selection (Reference spindle) | |
| | Invalid | Tool spindle synchronization II: Hob axis selection | |
| | Invalid | Sub part system I or sub part system II: Reset type | |
| | Valid | Material shape input by program: Tapping or threading surface color | |
| | Invalid | Sub part system II: Sub part system identification No. | |
| | Invalid | Fixed cycle: Tool feed directions when the cutting-edge angle is compensated | |
| I | Valid | Coordinates for arc center | |
| | Valid | Tool nose radius compensation / Tool radius compensation: Vector components | |
| | Valid | Deep hole drilling cycle (2): First cut amount | |
| | Valid | G00/G01 in-position width, Hole drilling cycle: G00 in-position width | ,I |
| | Valid | Material shape input by program: Interference surface color | |
| | Invalid | Allowable fluctuation range of spindle speed | |
| | Valid | Inclined surface machining: Rotation angle about the X axis (roll angle) | |
| J | Valid | Coordinates for arc center | |
| | Valid | Tool nose radius compensation / Tool radius compensation: Vector components | |
| | Invalid | Deep hole drilling cycle (2): Dwell time at return point | |
| | Valid | Drilling axis: G01 in-position width | ,J |
| | Valid | Material shape input by program: Cross-section surface color | |
| | Invalid | Multi-part system simultaneous thread cutting cycle: Part system number | |
| | Valid | Arc radius and approach direction | |
| | Valid | Inclined surface machining: Rotation angle about the Y axis (pitch angle) | |
| K | Valid | Coordinates for arc center | |
| | Valid | Tool nose radius compensation / Tool radius compensation: Vector components | |
| | Invalid | Hole drilling cycle, sub part system I, or sub part system II: Number of repetitions | |
| | Valid | Deep hole drilling cycle (2): Second and subsequent cut amounts | |
| | Valid | Thread lead increase/decrease amount (variable lead thread cutting) | |
| | Valid | Material shape input by program: Workpiece zero point position Z on the front side | |
| | Valid | Arc radius and approach direction | |
| | Valid | Inclined surface machining: Rotation angle about the Z axis (yaw angle) | |

| Address | Decimal point command | Usage | Remarks |
|---|---|---|---|
| L | Invalid | Subprogram Number of repetitions | |
| | Invalid | Tool compensation data input by program/workpiece offset input: type selec-tion | L2/L10/ L11/L20 |
| | Invalid | Parameter input by program: Selection | L70 |
| | Invalid | Parameter input by program: 2-word type data | 4 bytes |
| | Invalid | Timing synchronization number | |
| | Invalid | Tool life data | |
| | Valid | Material shape input by program: Material length | |
| | Invalid | Tool spindle synchronization IA: Rotation ratio designation (Workpiece axis) | |
| | Invalid | Tool spindle synchronization II: Rotation ratio designation (Workpiece axis) (For G code lists 2 to 5) | |
| | Invalid | Tool spindle synchronization II: Rotation ratio designation (Hob axis) (For G code lists 6 and 7) | |
| M | Invalid | Miscellaneous function codes | |
| N | Invalid | Sequence No. | |
| | Invalid | Parameter input by program: data numbers | |
| O | Invalid | Program No. | |
| P | Invalid | Dwell time | |
| | Invalid | Subprogram call: Program No. | |
| | Invalid | 2nd, 3rd and 4th reference position No. | |
| | Invalid | Constant surface speed control: Axis No. | |
| | Invalid | MRC finishing shape, sub part system I, or sub part system II: Start sequence No. | |
| | Valid | Cut-off cycle: Shift amount / Cut amount | |
| | Invalid | Compound type thread cutting cycle: Number of cutting passes, chamfering, tool nose angle | |
| | Valid | Compound type thread cutting cycle: Thread height | |
| | Invalid | Tool compensation data input by program/workpiece offset input: Compen-sation No. | |
| | Invalid | Parameter input by program: Broad classification number | |
| | Invalid | Material shape input by program: Machining surface color | |
| | Valid | Coordinate position data | |
| | Invalid | Skip signal command | |
| | Valid | Arc center coordinates (absolute positions) (geometric) | |
| | Invalid | Subprogram return destination sequence No. | |
| | Invalid | Extended workpiece coordinate system No, external workpiece coordinate system offset compensation No. | |
| | Invalid | Tool life data group No. | |
| | Invalid | Helical interpolation: Number of pitches | P/,P |
| | Valid | Thread milling cycle: Pitch amount | |
| | Valid | Spindle speed fluctuation detection: Start delay time | |
| | Invalid | Interactive cycle insertion: Cycle information identification number | |
| | Invalid | Tool spindle synchronization IB: Rotation ratio designation (Workpiece axis) | |
| | Invalid | Tool spindle synchronization IC: Rotation ratio designation (Spindle) | |
| | Valid | Tool spindle synchronization II: Gear torsion angle designation | |

| Address | Decimal point command | Usage | Remarks |
|---|---|---|---|
| Q | Invalid | Minimum spindle clamp speed | |
| | Invalid | MRC finishing shape, sub part system I, or sub part system II: End sequence No. | |
| | Valid | Cut-off cycle: Cut amount/shift amount | |
| | Valid | Compound type thread cutting cycle: Minimum cut amount | |
| | Valid | Compound type thread cutting cycle: First cut amount | |
| | Valid | Deep hole drilling cycle 1: Cut amount of each pass | |
| | Invalid | Tool compensation data input by program: Hypothetical tool nose point number | |
| | Invalid | Deep hole drilling cycle (2): Dwell at cut point | |
| | Valid | Arc center coordinates (absolute positions) (geometric) | |
| | Valid | Thread cutting start shift angle | |
| | Invalid | Tool life data management method | |
| | Invalid | Droop skip value | |
| | Valid | Spindle up-to-speed detection width | |
| | Valid | Thread milling cycle: Dwell time | |
| | Invalid | Inclined surface machining: Rotation order | |
| | Invalid | Machining interruption: Sequence No. [C80] | ,Q |
| | Invalid | Tool spindle synchronization IB/IC: Rotation ratio designation (Rotary tool axis) | |
| | Valid | Tool spindle synchronization II: Module or diametral pitch designation | |
| R | Valid | R-designated arc radius | |
| | Valid | Arc radius of corner rounding | ,R |
| | Valid | Automatic tool length measurement: ZONE r | |
| | Valid | MRC longitudinal/face: Escape amount | |
| | Invalid | MRC shaping: Division No. | |
| | Valid | Cut-off cycle: Return amount | |
| | Valid | Cut-off cycle: Escape amount | |
| | Valid | Compound type thread cutting cycle: Finishing allowance | |
| | Valid | Compound type thread cutting cycle turning cycle: Taper difference | |
| | Valid | Hole drilling cycle/deep hole drilling cycle (2): Distance to R point | |
| | Valid | Tool compensation data input by program: Nose R compensation amount | |
| | Valid | Coordinate position data | |
| | Valid | Rough cutting cycle (longitudinal) (face): Retract amount | |
| | Valid | Synchronous tap: R point position (incremental position from initial point) | |
| | Invalid | Synchronous tap/asynchronous tap changeover | ,R |
| | Valid | Phase shift amount of synchronized spindle | |
| | Valid | Tool spindle synchronization II: Phase shift amount (Workpiece axis) (For G code lists 2 to 7) | |
| | Invalid | Tool spindle synchronization II: Rotation ratio designation (Workpiece axis) (For G code lists 6 and 7) | |
| | Valid | Rotation angle/rotation angle compensation amount | |
| | Invalid | Skip acceleration/deceleration time constant | |
| | Invalid | Material shape input by program: Number of corners | |
| | Invalid | Allowable fluctuation rate of spindle speed | |
| | Valid | Simple inclined surface machining: Tool axis rotation angle compensation amount | |

| Address | Decimal point command | Usage | Remarks |
|---|---|---|---|
| S | Invalid | Spindle function codes | |
| | Invalid | Maximum spindle clamp speed | |
| | Invalid | Surface speed for constant surface speed control or constant surface speed cancel | |
| | Invalid | Parameter input by program: word type data | 2 bytes |
| | Valid | Synchronous tap: Spindle rotation speed at retract | ,S |
| | Invalid | Spindle designation | |
| T | Invalid | Tool function codes | |
| U | Valid | Coordinate position data | |
| | Valid | Tool compensation data input by program: Compensation amount | |
| | Valid | Rough cutting cycle (longitudinal): Cut amount | |
| | Valid | Dwell | |
| | Valid | Inclined surface machining: Feature coordinate system's zero point | |
| V | Valid | Coordinate position data | |
| | Valid | Tool compensation data input by program: Compensation amount | |
| | Valid | Inclined surface machining: Feature coordinate system's zero point | |
| W | Valid | Coordinate position data | |
| | Valid | Tool compensation data input by program: Compensation amount | |
| | Valid | Rough cutting cycle (face): Cut amount | |
| | Valid | Material shape input by program: Rear workpiece zero point position Z | |
| | Valid | Inclined surface machining: Feature coordinate system's zero point | |
| X | Valid | Coordinate position data | |
| | Valid | Dwell | |
| | Valid | Tool compensation data input by program: Compensation amount | |
| | Valid | Inclined surface machining: Feature coordinate system's zero point | |
| Y | Valid | Coordinate position data | |
| | Valid | Tool compensation data input by program: Compensation amount | |
| | Valid | Inclined surface machining: Feature coordinate system's zero point | |
| Z | Valid | Coordinate position data | |
| | Valid | Tool compensation data input by program: Compensation amount | |
| | Valid | Inclined surface machining: Feature coordinate system's zero point | |

**Note**

(1) Decimal points are all valid in user macro arguments.

## Program example

(1) Program example of decimal point valid address

| Program example | Decimal point command 1 | | Decimal point command 2 |
|---|---|---|---|
| | When 1 = 1 μm | When 1 = 10 μm | When 1 = 1 mm |
| G00 X123.45<br>(decimal points are all mm points) | X123.450 mm | X123.450 mm | X123.450 mm |
| G00 X12345 | X12.345 mm<br>(last digit is 1 μm unit) | X123.450 mm | X12345.000 mm |
| #111 = 123 #112 = 5.55<br>X#111 Z#112 | X123.000 mm<br>Z5.550 mm | X123.000 mm<br>Z5.550 mm | X123.000 mm<br>Z5.550 mm |
| #113 = #111 + #112<br>(addition) | #113 = 128.550 | #113 = 128.550 | #113 = 128.550 |
| #114 = #111 - #112<br>(subtraction) | #114 = 117.450 | #114 = 117.450 | #114 = 117.450 |
| #115 = #111 * #112<br>(multiplication) | #115 = 682.650 | #115 = 682.650 | #115 = 682.650 |
| #116 = #111 / #112<br>#117 = #112 / #111<br>(division) | #116 = 22.162<br>#117 = 0.045 | #116 = 22.162<br>#117 = 0.045 | #116 = 22.162<br>#117 = 0.045 |

## Precautions

(1) If an arithmetic operator is inserted, the data will be handled as data with a decimal point.

(Example 1) G00 X123+0 ;

This is the X axis 123mm command. It will not be 123 μm.

# 6

# Interpolation Functions

# 6.1 Positioning (Rapid Traverse); G00

## Function and purpose

This command is accompanied by coordinate words and performs high-speed positioning of a tool, from the present point (start point) to the end point specified by the coordinate words.

## Command format

**Positioning (Rapid Traverse)**

```
G00 X__/U__ Z__/W__ ,I__ ,F__;
```

| | |
|---|---|
| X_/U_ | X axis end point coordinate (X is the absolute position of workpiece coordinate system, U is the incremental position from current position) |
| Z_/W_ | Z axis end point coordinate (Z is the absolute position of workpiece coordinate system, W is the incremental position from current position) |
| ,I | In-position width. (1 to 999999)<br>This address is valid only in the commanded block. A block that does not contain this address will follow the parameter "#1193 inpos" settings.<br>For details, refer to "7.13 Deceleration Check". |
| ,F | Specifies the rapid traverse speed of the movement initiated by a G00 command, the movement in the G00 mode, and the movement during the fixed cycle for drilling. The range is equal to the range of the feed per minute F command (mm/min, inch/min) in the G01 mode. Switching inch/mm is invalid for rotary axes.<br>For details, refer to "7.1.2 G00 Feedrate Command (,F Command)". |

The command addresses are valid for all additional axes.

## Detailed description

(1) The rapid traverse speed varies depending on the MTB specifications (parameter "#2001 rapid").
When the "G00 feedrate designation (,F command)" function is enabled and an ",F" command is included in the same block as for the G00 command, positioning is carried out at the feedrate specified by the ",F" command. If this function is invalid or an ",F" command is not included in the block of the G00 command, positioning is carried out at the feedrate specified in parameter "#2001 rapid".
(The rapid traverse speed determined in each specification is selected during control axis superimposition control or arbitrary axis superimposition control.)

(2) G00 command belongs to the 01 group and is modal. When G00 command is successively issued, the following blocks can be specified only by the coordinate words.

(3) In the G00 mode, acceleration and deceleration are always carried out at the start point and end point of the block. Before advancing to the next block, a commanded deceleration or an in-position check is conducted at the end point to confirm that the movement is completed for all the moving axes in each part system.

(4) G functions (G83 to G89) in the 09 group are canceled (G80) by the G00 command.

**⚠ CAUTION**

**⚠ The commands with "no value after G" will be handled as "G00".**

## Tool path

Whether the tool moves along a linear or non-linear path varies depending on the MTB specifications (parameter "#1086 G0Intp").
The positioning time does not change according to the path.

(1) Linear path (When parameter "#1086 G0Intp" is set to "0")
In the positioning process, a tool follows the shortest path that connects the start point and the end point. The positioning speed is automatically calculated so that the shortest distribution time is obtained in order that the commanded speeds for each axis do not exceed the rapid traverse rate.
When, for instance, the X axis and Z axis rapid traverse rates are both 9600 mm/min and when programmed as follows, the tool will follow the path shown in the figure below.
G00 Z-300000 X400000; (With an input setting unit of 0.001 mm)

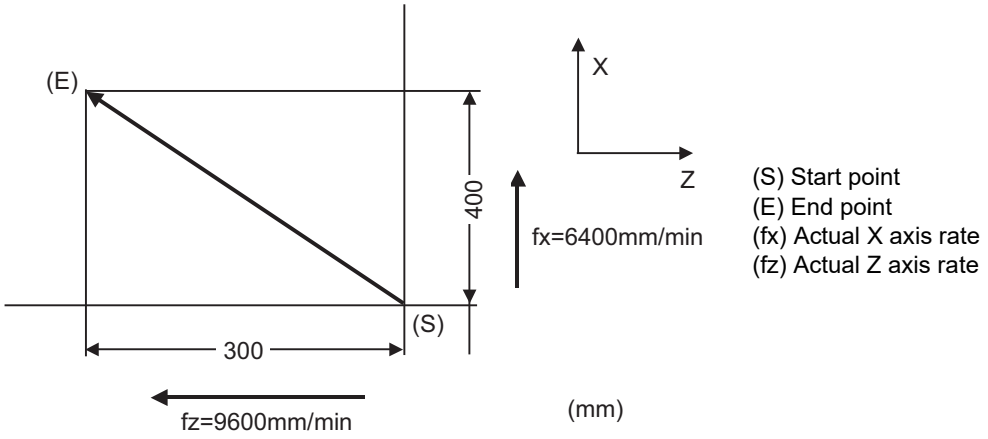


(2) Non-linear path (When parameter "#1086 G0Intp" is set to "1" )
In positioning, the tool will move along the path from the start point to the end point at the rapid traverse rate of each axis.
When, for instance, the X axis and Z axis rapid traverse rates are both 9600 mm/min and when programmed as follows, the tool will follow the path shown in the figure below.
G00 Z-300000 X400000; (With an input setting unit of 0.001 mm)

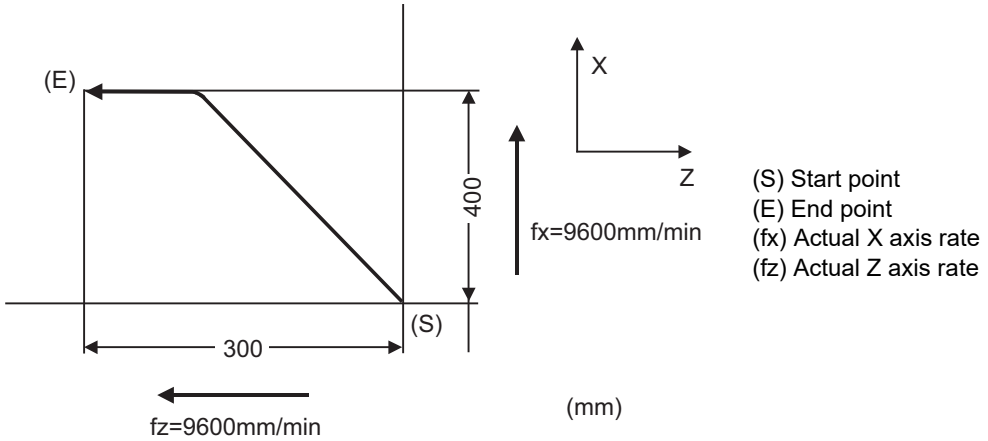

### Program example

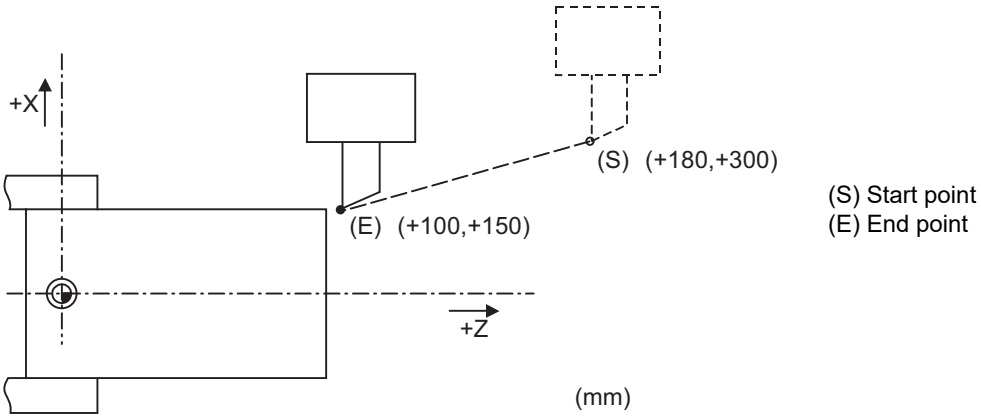


| | |
|---|---|
| G00 X100. Z150. ; | Absolute command |
| G00 U-80. W-150. ; | Incremental command |

### Precautions for deceleration check

There are three methods of carrying out a deceleration check: the command deceleration check method, the smoothing check method, and the in-position check method. The method used for rapid traverse or cutting feed varies depends on the MTB specification (combination of parameters "#1306 InpsTyp", "#1389 G1SmthChk", "#1223 aux07/bit1", and "#1193 inpos").
A block with an in-position width command performs an in-position check with a temporarily changed in-position width. (Programmable in-position width command)
A block without an in-position width command is processed using the deceleration check method based on the MTB specifications (parameter "#1193 inpos").
During cutting feed and when the error detection is ON, the in-position check is forcibly carried out.

| **Rapid traverse (G00)** | | **#1193 inpos** | |
|---|---|---|---|
| | | **0** | **1** |
| ,I command | No | Commanded deceleration method (Commanded deceleration check that varies according to the type of acceleration/deceleration, set in "#2003 smgst" bit3-0) | In-position check method (In-position check by "#2077 G0inps", "#2224 SV024") |
| | Yes | In-position check method (In-position check by ",I", "#2077 G0inps", "#2224 SV024") | |

| **Cutting feedrate (G01)** | | **#1193 inpos** | |
|---|---|---|---|
| | | **0** | **1** |
| ,I command | No | Commanded deceleration method (Commanded deceleration check that varies according to the type of acceleration/deceleration, set in "#2003 smgst" bit7-4) | In-position check method (In-position check by "#2078 G1inps", "#2224 SV024") |
| | Yes | In-position check method (In-position check by ",I", "#2078 G1inps", "#2224 SV024") | |

Refer to "7.13 Deceleration Check" for the deceleration check method.

# 6.2 Linear Interpolation; G01

## Function and purpose

This command is accompanied by coordinate words and a feedrate command. It makes the tool move (interpolate) linearly from its current position to the end point specified by the coordinate words at the speed specified by address F. In this case, the feedrate specified by address F always acts as a linear speed in the tool nose center advance direction.

## Command format

### Linear interpolation

| |
|---|
| **G01 X__/U__ Z__/W__ α__ F__ ,I__ ;** |

| | |
|---|---|
| X,U,Z,W,α | Coordinate values (α is the additional axis.) |
| F | Feedrate (mm/min or °/min) |
| ,I | In-position width. (1 to 999999)<br>This address is valid only in the commanded block. A block that does not contain this address will follow the parameter "#1193 inpos" settings. |

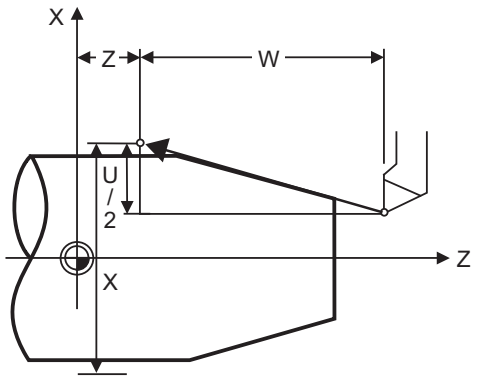


## Detailed description

(1) G01 command is a modal command in the 01 group. When G01 command is successively issued, the following blocks can be specified only by the coordinate words. If there is no command, a program error (P62) will occur.

(2) The feedrate for a rotary axis is commanded by °/min (decimal point position unit). (F300=300°/min)

(3) The G functions (G70 to G89) in the 09 group are cancelled (G80) by the G01 command.

### Programmable in-position width command for linear interpolation

This command commands the in-position width for the linear interpolation command from the machining program.

| | |
|---|---|
| G01 X_ Z_ F_ ,I_ ; | |
| X,Z | Linear interpolation coordinate value of each axis |
| F | Feedrate |
| ,I | In-position width |

The commanded in-position width is valid in the linear interpolation command only when carrying out deceleration check.

- When the error detection switch is ON.
- When G09 (exact stop check) is commanded in the same block.
- When G61 (exact stop check mode) is selected.

**Note**

(1) Refer to section "6.1 Positioning (Rapid Traverse); G00" for details on the in-position check operation.

X0;
Y0;
Z0;

**Program example**

(Example 1)

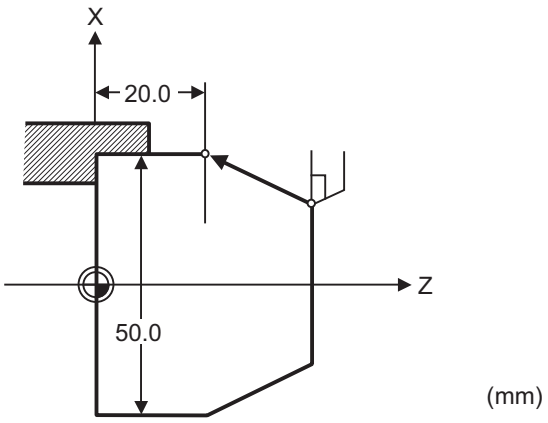


| | |
|---|---|
| G01 X50.0 Z20.0 F300 ; | |

(Example 2) Cutting in the sequence of P1 -> P2 -> P3 -> P4 at 300 mm/min feedrate.
However, P0 -> P1 and P4 -> P0 are for tool positioning.

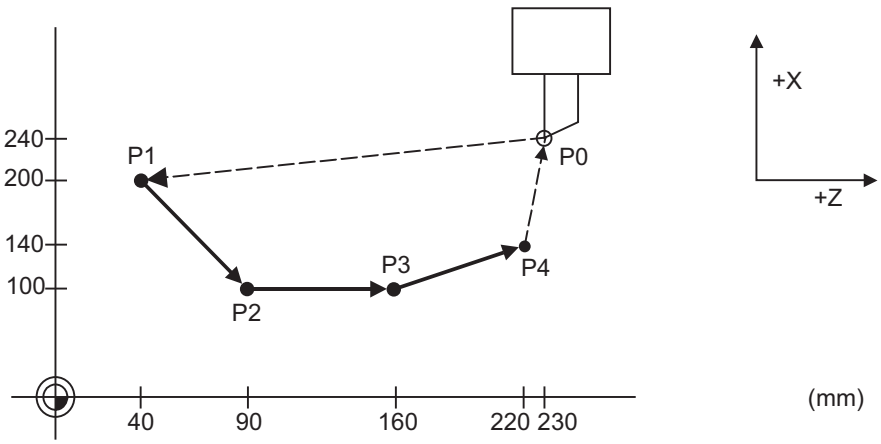


| | |
|---|---|
| G00 X200. Z40. ; | P0 -> P1 |
| G01 X100. Z90. F300 ; | P1 -> P2 |
| Z160. ; | P2 -> P3 |
| X140. Z220. ; | P3 -> P4 |
| G00 X240. Z230. ; | P4 -> P0 |

# 6.3 Circular Interpolation; G02, G03

## Function and purpose

This function moves a tool along a circular arc on the selected plane by using the end coordinate and center coordinate given by the machining program. The center coordinate can be assigned in 2 ways: assignment of center coordinate with I, J and K, and assignment of radius with the address "R".
(For radius setting, refer to "6.4 R Specification Circular Interpolation; G02, G03".)
For the circular arc command, the end point coordinates are assigned with addresses X, Y (or Z, or parallel axis X, Y, Z), and the coordinate value of the circular arc center is assigned with addresses I, J (or K).

## Command format

**Circular interpolation : Clockwise (CW)**

```
G02 X__/U__ Z__/W__ I__ K__ F__ ;
```

**Circular interpolation : Counterclockwise (CCW)**

```
G03 X__/U__ Z__/W__ I__ K__ F__ ;
```

| | |
|---|---|
| X/U | Circular end point coordinates, X axis (X is the absolute position of workpiece coordinate system, U is the incremental position from present position) |
| Z/W | Circular end point coordinates, Z axis (Z is the absolute position of workpiece coordinate system, W is the incremental position from present position) |
| I | Circular center, X axis (I is the radius command incremental position of X coordinate at the center as seen from the start point.) |
| K | Circular center, Z axis (K is the incremental position of Z coordinate at the center as seen from the start point.) |
| F | Feedrate (The speed is controlled to always move along the circumference.) |

### Detailed description

(1) The circular arc center coordinate must be commanded in the input setting unit. Caution is required for the circular arc command of an axis for which the program command unit differs. Command with a decimal point to avoid confusion.

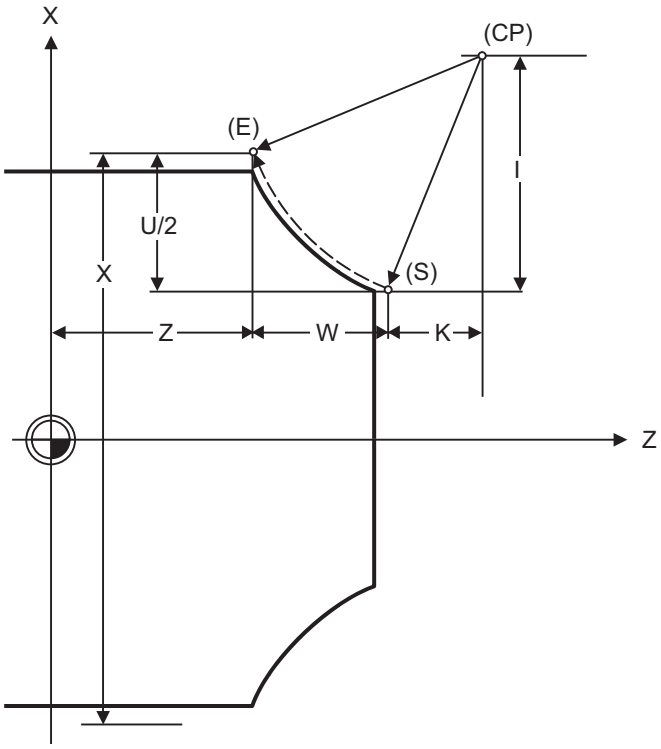


(S) Start point
(E) End point
(CP) Center point

(2) G02 (G03) is a modal command of the 01 group. When G02 (G03) command is issued continuously, the next block and after can be commanded with only coordinate words.
The circular rotation direction is distinguished by G02 and G03.

G02 CW (Clockwise)
G03 CCW (Counterclockwise)

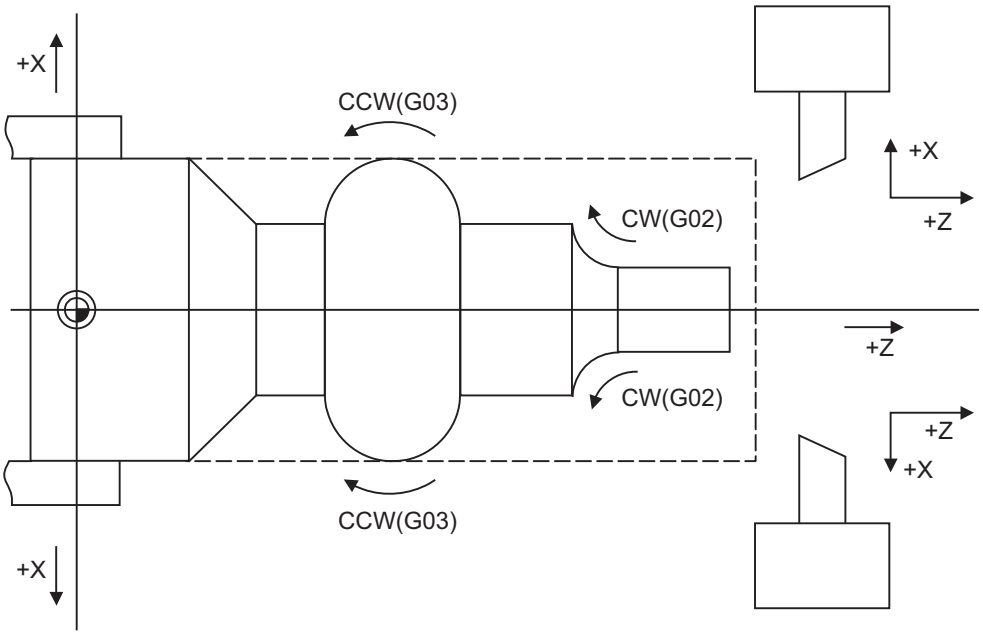

(3) An arc which extends for more than one quadrant can be executed with a single block command.

(4) The following information is needed for circular interpolation.

| | |
|---|---|
| (a) Rotation direction | Clockwise (G02) or counterclockwise (G03) |
| (b) Circular end point co-ordinates | Set by addresses X, Z, U, W |
| (c) Circular center coordi-nates | Set by addresses I, K (incremental commands) |
| (d) Feedrate | Set by address F |

(5) A program error results when I, K or R is not commanded.
Consideration must be given to the sign for I and K since I is the distance in the X-axis direction to the arc center from the start point and K in the Z-axis direction.

(6) If an R specification and I, K specification are given at the same time in the same block, the circular command with the R specification takes precedence.

(7) No T commands can be issued in the G02/G03 modal status.
A program error (P151) will occur if a T command is issued in the G02/G03 modal status.

## Change into linear interpolation command

Program error (P33) will occur in general use when the center and radius are not designated at circular command. Depending on the MTB specifications, the linear interpolation can be operated up to the terminal coordinate value only for that block to which the center coordinate or radius is not designated (parameter "#11029 Arc to G1 no Cent" (Tolerable from arc to linear when no arc center has been designated). However, a modal is the circular modal. This function is not applied to a circular command by a geometric function.

(Example) #11029 = "1"

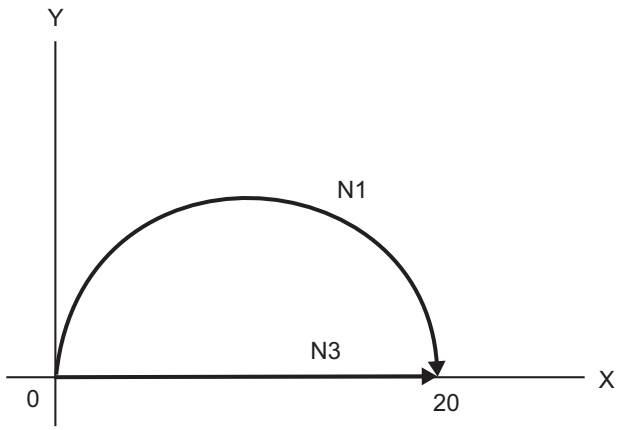


```
G90 X0 Y0 ;
N1 G02 X20. I10. F500 ;    ... (a)
N2 G00 X0 ;
N3 G02 X20. F500 ;         ... (b)
M02 ;
```

(a) The circular interpolation (G02) is executed because there is a center command.

(b) The linear interpolation (G01) is executed because there is no center and radius command.

### Program example

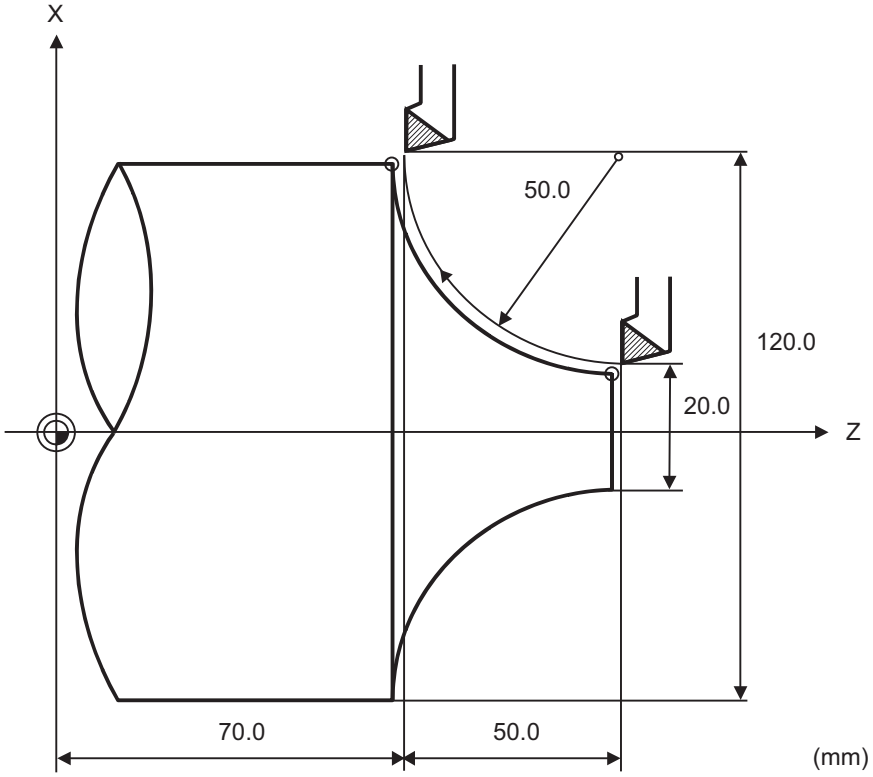


| | |
|---|---|
| G02 X120.0 Z70.0 I50.0 F200 ; | Absolute command |
| G02 U100.0 W-50.0 I50.0 F200 ; | Incremental command |

## Precautions

(1) The terms "clockwise" (G02) and "counterclockwise" (G03) used for circular operations are defined as a case where, in a right-hand coordinate system, the negative direction is viewed from the positive direction of the coordinate axis which is at right angles to the plane in question.

(2) If all the end point coordinates are omitted or the end point is at the same position as the start point, commanding the center using I and K is the same as commanding a 360°arc (perfect circle).

(3) The following occurs when the start and end point radius do not match in a circular command :

(a) Program error (P70) results at the circular start point when error ΔR is greater than parameter "#1084 RadErr".

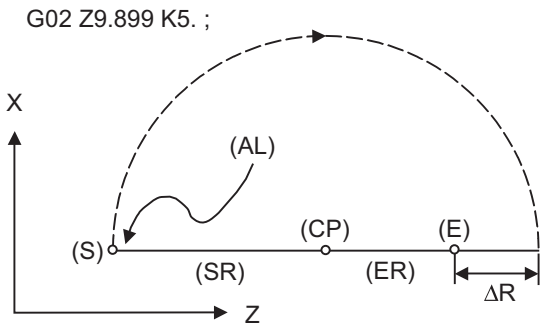


#1084 RadErr parameter value 0.100
Start point radius=5.000
End point radius=4.899
Error ΔR =0.101

(S) Start point
(CP) Center point
(E) End point
(SR) Start point radius
(ER) End point radius
(AL) Alarm stop

(b) Spiral interpolation in the direction of the commanded end point will be conducted when error ΔR is less than the parameter value.

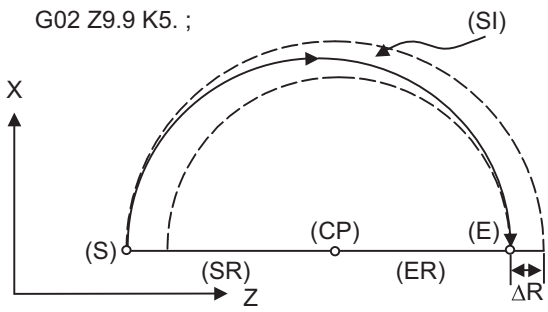


#1084 RadErr parameter value 0.100
Start point radius=5.000
End point radius=4.900
Error ΔR =0.100

(S) Start point
(CP) Center point
(E) End point
(SR) Start point radius
(ER) End point radius
(SI) Spiral interpolation

Also, if "#1084 RadErr" is set to "0", "0.1" is assumed to set.

(c) If the start point radius differs from the end point radius but if the start point angle does not differ from the end point angle, the linear interpolation or spiral interpolation is selected depending on the MTB specifications (parameter "#1278 ext14/bit7").

| **#1278 ext14/bit7 = 0**<br>**Linear interpolation** | **#1278 ext14/bit7 = 1**<br>**Spiral interpolation** |
|---|---|
| G90 G00 X10. Y0.;<br>G02 X10.01 Y0. I-10.01; | G90 G00 X10. Y0.;<br>G02 X10.01 Y0. I-10.01; |
| 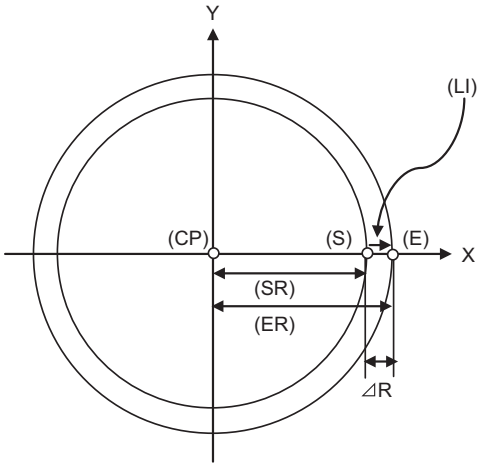 | 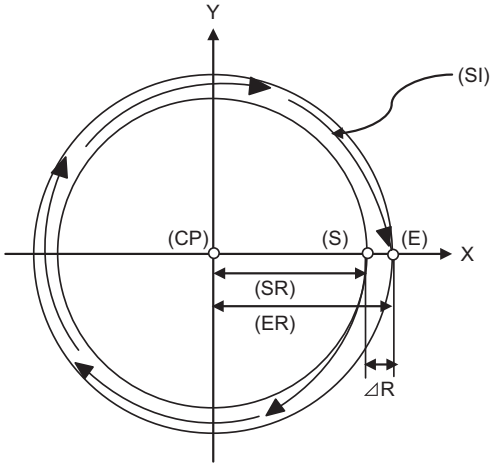 |
| (CP) Center point<br>(S) Start point<br>(E) End point | (SR) Start point radius<br>(ER) End point radius<br>(LI) Linear interpolation<br>(SI) Spiral interpolation |

# 6.4 R Specification Circular Interpolation; G02, G03

## Function and purpose

Along with the conventional circular interpolation commands based on the circular center coordinate (I, K) designation, these commands can also be issued by directly designating the circular radius R.

## Command format

**R specification circular interpolation Clockwise (CW)**

```
G02  X/U__  Z/W__  R__  F__  ;
```

**R specification circular interpolation Counterclockwise (CCW)**

```
G03  X/U__  Z/W__  R__  F__  ;
```

| | |
|---|---|
| X/U | X axis end point coordinate |
| Z/W | Z axis end point coordinate |
| R | Circular radius |
| F | Feedrate |

The arc radius must be commanded in the input setting unit. Caution is required for the arc command of an axis for which the program command unit differs. Command with a decimal point to avoid confusion.
A maximum of 6 digits before decimal point can be specified for the radius.

## Detailed description

The circular center is on the bisector line which is perpendicular to the line connecting the start and end points of the circular. The point, where the circular with the specified radius whose start point is the center intersects the perpendicular bisector line, serves as the center coordinates of the circular command.
If the R sign of the commanded program is plus, the circular is smaller than a semicircular; if it is minus, the circular is larger than a semicircular.

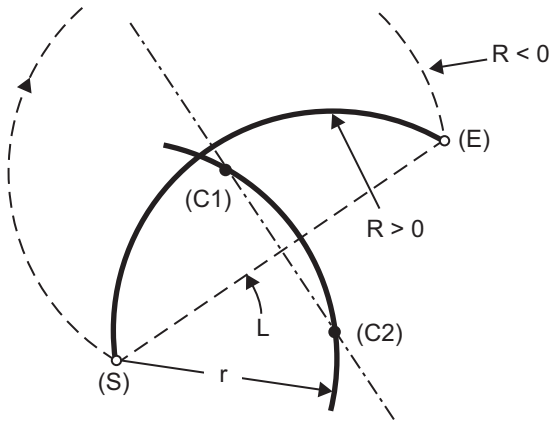


(S) Start point
(E) End point
(C1): Arc center if R<0
(C2): Arc center if R>0

The following condition must be met with an R-specified arc interpolation command:

$$\frac{L}{2 \cdot r} \leqq 1$$

When (L/2 - r) > (parameter : #1084 RadErr), an alarm will occur.

Where L is the line from the start point to the end point. If an R specification and I, K specification are given at the same time in the same block, the circular command with the R specification takes precedence. In the case of a full-circle command (where the start and end points coincide), an R specification circular command will be completed immediately even if it is issued and no operation will be executed. An I, K specification circular command should therefore be used in such a case.

### Circular center coordinate compensation

When "the error margin between the segment connecting the start and end points" and "the commanded radius × 2" is less than the setting value because the required semicircle is not obtained by calculation error in R specification circular interpolation, "the midpoint of the segment connecting the start and end points" is compensated for as the circular center.
The setting value depends on the MTB specifications (parameter "#11028 Tolerance Arc Cent" (Tolerable correction value of arc center error)).

(Example) #11028 = "0.000 (mm)"

| Setting value | Tolerance value |
|---|---|
| Setting value < 0 | 0 (Center error will not be interpolated) |
| Setting value = 0 | 2×minimum setting increment |
| Setting value > 0 | Setting value |

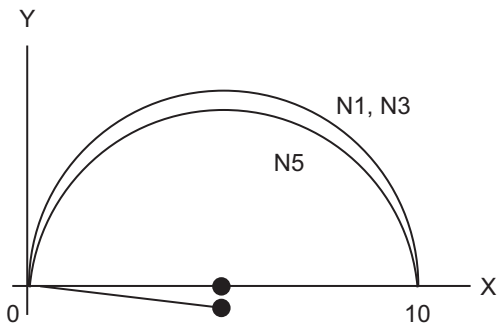


```
G90 X0 Y0 ;
N1 G02 X10. R5.000;
N2 G00 X0;
N3 G02 X10. R5.001;      ...(a)
N4 G00 X0;
N5 G02 X10. R5.002;      ...(b)
N6 G00 X0;
M02 ;
```

(a) Compensate the center coordinate: Same as N1 path

(b) Do not compensate the center coordinate: Inside path a little than N1

Calculation error margin compensation allowance value: 0.002 mm
Segment connecting the start and end points: 10.000
N3: Radius × 2 = 10.002 "Error 0.002 -> Compensate"
N5: Radius × 2 = 10.004 "Error 0.004 -> Do not compensate"

## Program example

(Example 1)

| | |
|---|---|
| G03 Zz1 Xx1 Rr1 Ff1 ; | R specification circular on Z-X plane |

(Example 2)

| | |
|---|---|
| G02 Xx1 Zz1 Ii1 Kk1 Rr1 Ff1 ; | R specification circular on Z-X plane<br>(When the R specification and I, K specification are contained in the same block, the R specification has priority in processing.) |

## Precautions

(1) In the case of a full-circle command (where the start and end points coincide), an R specification circular command will be completed immediately even if it is issued and no operation will be executed. An I, J, K specification circular command should therefore be used in such a case.

(2) If an R specification and I, K specification are given at the same time in the same block, the circular command with the R specification takes precedence.

# 6.5 Plane Selection; G17, G18, G19

## Function and purpose

These commands are used to select the control plane and the plane on which the circular exists.
If the 3 basic axes and the parallel axes corresponding to these basic axes are entered as parameters, the commands can select the plane composed of any 2 axes which are not parallel axes. If a rotary axis is entered as a parallel axis, the commands can select the plane containing the rotary axis.
These commands are used to select following planes.

- The plane for circular interpolation
- The plane for nose radius compensation

## Command format

| | |
|---|---|
| **G17 ;** | I-J plane selection |

| | |
|---|---|
| **G18 ;** | K-I plane selection |

| | |
|---|---|
| **G19 ;** | J-K plane selection |

## Detailed description

I, J and K indicate each basic axis or parallel axis.
When the power is turned ON or when the system is reset, the plane set by the parameters "#1025 I_plane" is selected.

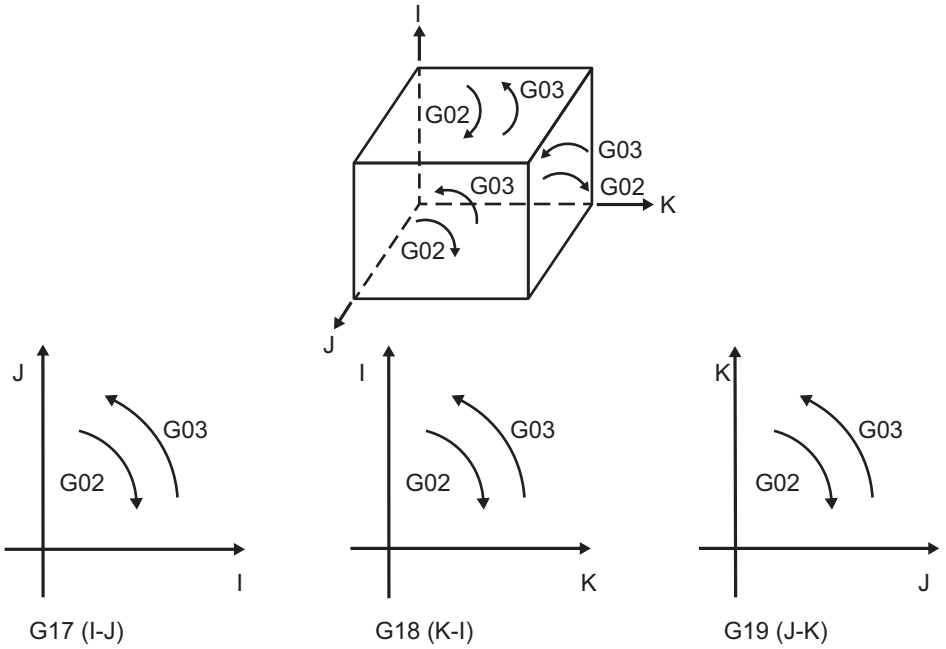


G17 (I-J) G18 (K-I) G19 (J-K)

## Parameter entry

| | #1026 to 1028 Basic axis I, J, K | #1029 to 1031 Flat axis I, J, K | Basic axes and parallel axes can be entered in the parameters. The same axis name can be entered in duplication, but when it is assigned in duplication, the plane is determined by plane selection system (5). The axis which is not registered as the control axis cannot be set. |
|---|---|---|---|
| I | X | Y | |
| J | Y | | |
| K | Z | | |

Table 1 Examples of plane selection parameter entry

## Plane selection system

This section describes the plane selection shown in the "Table 1 Examples of plane selection parameter entry".

(1) Axis addresses assigned in the same block as the plane selection (G17, G18, G19) command determine which of the basic axes or parallel axes are to be in the actual plane selected.

(Example)

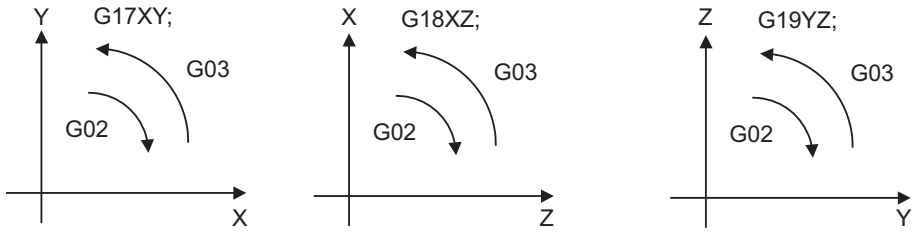


(2) Plane selection is not performed with blocks in which the plane selection G code (G17, G18, G19) is not assigned.
G18 X_ Z_ ; Z-X plane
Y_ Z_ ; Z-X plane (no plane change)

(3) When the axis addresses are omitted in the block containing the plane selection G codes (G17, G18, G19), it is assumed that the axis addresses of the 3 basic axes have been assigned.
G18 ; (Z-X plane = G18 XZ ;)

(4) When the axis addresses are commanded to the same block as the plane selection G code (G17, G18, G19), the commanded axes will travel.

(5) When the basic axes or their parallel axes are duplicated and assigned in the same block as the plane selection G code (G17, G18, G19), the plane is determined in the order of basic axes, and then parallel axes.
G18 XYZ ; The Z-X plane is selected. Therefore, the Y movement is unrelated to the selected plane.

### Note

- When the "2" in the parameter "#1025 Initial plane" is kept ON, the G18 plane is selected when the power is turned ON or when the system is reset.

# 6.6 Thread Cutting

## 6.6.1 Constant Lead Thread Cutting; G33

### Function and purpose

The G33 command exercises feed control over the tool which is synchronized with the spindle rotation and so this makes it possible to conduct constant-lead straight thread-cutting, tapered thread-cutting, and continuous thread-cutting.

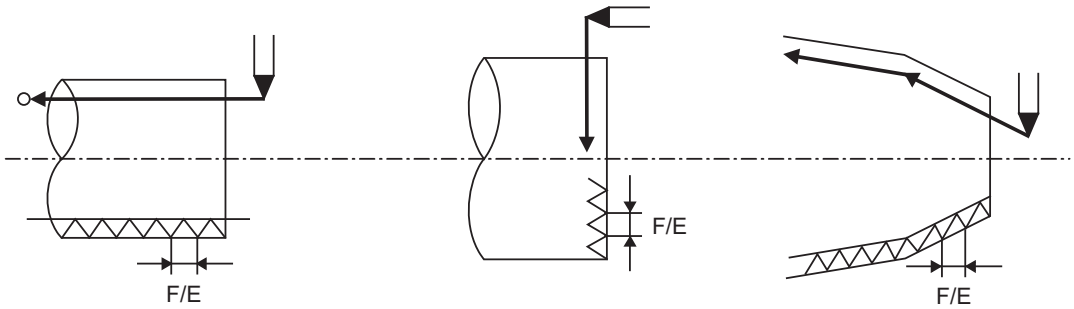


Straight thread Scrolled thread Continuous thread

## Command format

### Normal lead thread cutting

```
G33  Z/W__ X/U__ F__ Q__ ;
```

| | |
|---|---|
| Z, W, X, U | End point of thread cutting |
| F | Lead of long axis (axis which moves most) direction |
| Q | Thread cutting start shift angle (0.001 - 360.000°) |

### Precision lead thread cutting

```
G33  Z/W__ X/U__ E__ Q__ ;
```

| | |
|---|---|
| Z, W, X, U | End point of thread cutting |
| E | Lead of long axis (axis which moves most) direction |
| Q | Thread cutting start shift angle (0.001 - 360.000°) |

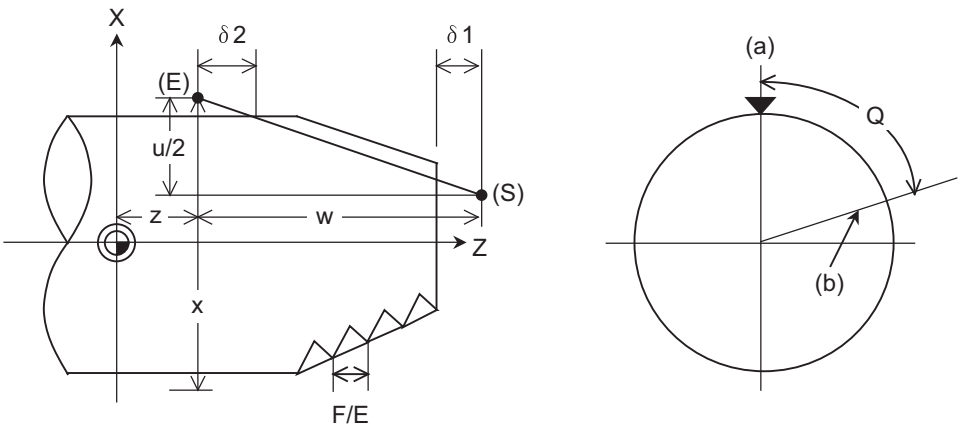


δ1 > Illegal lead at start of thread cutting

δ2 > Illegal lead at end of thread cutting

(S) Start point

(E) End point

(a) One-rotation synchronization signal

(b) Thread cutting start position

## Detailed description

(1) The E command is also used for the number of ridges in inch thread cutting, and whether the number of ridges or precision lead is to be designated can be selected by parameter setting. (Parameter "#8156 Fine thread cut E" is set to "1" for precision lead designation.)

(2) The lead in the long axis direction is commanded for the taper thread lead.

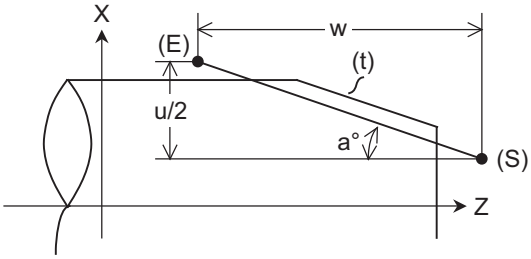


(t) Tapered thread section

(E) End point

(S) Start point

When a < 45°, Lead is in Z axis direction.

When a > 45°, Lead is in X axis direction.

When a = 45°, Lead can be in either Z or X axis direction.

**Thread cutting metric input**

| Input Setting Unit | B (0.001 mm) | | | C (0.0001 mm) | | |
|---|---|---|---|---|---|---|
| Command Address | F (mm/rev) | E (mm/rev) | E (ridges/inch) | F (mm/rev) | E (mm/rev) | E (ridges/inch) |
| Minimum command unit | 1 (=0.0001)<br>(1.=1.0000) | 1 (=0.00001)<br>(1.=1.00000) | 1 (=1.00)<br>(1.=1.00) | 1 (=0.00001)<br>(1.=1.00000) | 1 (=0.000001)<br>(1.=1.000000) | 1 (=1.000)<br>(1.=1.000) |
| Range | 0.0001 -<br>999.9999 | 0.00001 -<br>999.99999 | 0.03 -<br>999.99 | 0.00001 -<br>999.99999 | 0.000001 -<br>999.999999 | 0.026 -<br>222807.017 |

| Input Setting Unit | D (0.00001 mm) | | | E (0.000001 mm) | | |
|---|---|---|---|---|---|---|
| Command Address | F (mm/rev) | E (mm/rev) | E (ridges/inch) | F (mm/rev) | E (mm/rev) | E (ridges/inch) |
| Minimum command unit | 1 (=0.000001)<br>(1.=1.000000) | 1 (=0.0000001)<br>(1.=1.0000000) | 1 (=1.0000)<br>(1.=1.0000) | 1 (=0.0000001)<br>(1.=1.0000000) | 1 (=0.00000001)<br>(1.=1.00000000) | 1 (=1.00000)<br>(1.=1.00000) |
| Range | 0.000001 -<br>999.999999 | 0.0000001 -<br>999.9999999 | 0.0255 -<br>224580.0000 | 0.0000001 -<br>999.9999999 | 0.00000001 -<br>999.99999999 | 0.02540 -<br>224719.00000 |

**Thread cutting inch input**

| Input Setting Unit | B (0.0001 inch) | | | C (0.00001 inch) | | |
|---|---|---|---|---|---|---|
| Command Address | F (inch/rev) | E (inch/rev) | E (ridges/inch) | F (inch/rev) | E (inch/rev) | E (ridges/inch) |
| Minimum command unit | 1 (=0.00001)<br>(1.=1.00000) | 1 (=0.000001)<br>(1.=1.000000) | 1 (=1.000)<br>(1.=1.000) | 1 (=0.000001)<br>(1.=1.000000) | 1 (=0.0000001)<br>(1.=1.0000000) | 1 (=1.0000)<br>(1.=1.0000) |
| Range | 0.00001 -<br>39.37007 | 0.000001 -<br>39.370078 | 0.025 -<br>9999.999 | 0.000001 -<br>39.370078 | 0.0000001 -<br>39.3700787 | 0.0254 -<br>9999.9999 |

| Input Setting Unit | D (0.000001 inch) | | | E (0.0000001 inch) | | |
|---|---|---|---|---|---|---|
| Command Address | F (inch/rev) | E (inch/rev) | E (ridges/inch) | F (inch/rev) | E (inch/rev) | E (ridges/inch) |
| Minimum command unit | 1 (=0.0000001)<br>(1.=1.0000000) | 1 (=0.00000001)<br>(1.=1.00000000) | 1 (=1.00000)<br>(1.=1.00000) | 1 (=0.00000001)<br>(1.=1.00000000) | 1 (=0.000000001)<br>(1.=1.000000000) | 1 (=1.000000)<br>(1.=1.000000) |
| Range | 0.0000001 -<br>39.3700787 | 0.00000001 -<br>39.37007873 | 0.02540 -<br>9999.99999 | 0.00000001 -<br>39.37007873 | 0.000000001 -<br>39.370078736 | 0.025400 -<br>9999.999999 |

<Note>

- It is not possible to assign a lead where the feedrate as converted into feed per minute exceeds the maximum cutting feedrate.

(3) The constant surface speed control function should not be used for taper thread cutting commands or scrolled thread cutting commands.

(4) The spindle rotation speed should be kept constant throughout from the rough cutting until the finishing.

(5) If the feed hold function is employed during thread cutting to stop the feed, the thread ridges will lose their shape. For this reason, feed hold does not function during thread cutting.
Note that this is valid from the time the thread cutting command is executed to the time the axis moves. If the feed hold switch is pressed during thread cutting, block stop will occur at the end point of the block following the block in which thread cutting is completed (no longer G33 mode).

(6) The converted cutting feedrate is compared with the cutting feed clamp rate when thread cutting starts, and if it is found to exceed the clamp rate, an operation error will occur.

(7) In order to protect the lead during thread cutting, a cutting feedrate which has been converted may sometimes exceed the cutting feed clamp rate.

(8) An illegal lead is normally produced at the start of the thread and at the end of the cutting because of servo system delay and other such factors.
Therefore, it is necessary to command a thread length which is determined by adding the illegal lead lengths δ1 and δ2 to the required thread length.

(9) The spindle rotation speed is subject to the following restriction :

1 <= R <= Maximum feedrate/Thread lead
Where R <= Tolerable speed of encoder (r/min)
R: Spindle rotation speed (r/min)
Thread lead = mm or inches
Maximum feedrate= mm/min or inch/mim (this is subject to the restrictions imposed by the machine specifications.)

(10) A program error (P93) may occur when the result of the expression (9) is R<1 because the thread lead is very large to the highest cutting feedrate.

(11) Whether dry run is valid or invalid for thread cutting depends on the MTB settings. (When the parameter "#1279 ext15/bit4" is "1", the dry run is invalid. However, when the "Spindle OFF mode" signal (YCD3) is ON, the dry run is valid regardless of the parameter setting, and depends on the "Dry run" signal (YC15).)
When the dry run is valid, the feedrate based on the dry run is not synchronized with the spindle rotation.
The "Dry run" signal is checked at the start of thread cutting and any switching during thread cutting is ignored.

(12) Synchronous feed applies for the thread cutting commands even with an asynchronous feed command (G94).

(13) Spindle override and cutting feed override are invalid and the speeds are fixed to 100% during thread cutting. However, when the thread cutting override is valid, only the spindle override can be changed.

(14) When a thread cutting command is programmed during nose R compensation, the compensation is temporarily canceled and the thread cutting is executed.

(15) When the mode is switched to another automatic mode while G33 is executed, the following block which does not contain a thread cutting command is first executed and then the automatic operation stops.

(16) When the mode is switched to the manual mode while G33 is executed, the following block which does not contain a thread cutting command is first executed and then the automatic operation stops. In the case of a single block, the following block which does not contain a thread cutting command (G33 mode is cancelled) is first executed and then the automatic operation stops. Note that automatic operation is stopped until the G33 command axis starts moving.

(17) In the thread cutting command, the part systems wait for the single rotation synchronization signal of the rotary encoder before starting movement.
When the thread cutting is commanded for one spindle from multiple part systems, each part system waits for the encoder single rotation synchronization signal before starting thread cutting; therefore, the timing synchronization operation between part systems is not required.

(18) The thread cutting start shift angle is not modal. If there is no Q command with G33, this will be handled as "Q0".

(19) The automatic handle interrupt/interruption is valid during thread cutting.

(20) If a value exceeding 360.000 is command in G33 Q, a program error (P35) will occur.

(21) G33 cuts one row with one cycle. To cut two rows, change the Q value, and issue the same command.

(22) If the cutting feed acceleration/deceleration type (parameter "#2003 smgst/bit4" to "#2003 smgst/bit7") is set to a type other than soft acceleration/deceleration, linear acceleration/deceleration is applied to the acceleration/deceleration during thread cutting. These settings depends on the MTB specifications.

## Precautions

(1) For multiple spindle control II, do not change the encoder selection signal during the thread cutting.
If it is changed, the thread ridges will lose their shape because the tool cannot be fed at the correct feedrate.

(2) When the thread cutting is commanded while the following parameters are set, the thread cutting start timing change is valid. (This depends on the MTB specifications.)

- "#13227 SP227 bitF-C" is "4". (The proximity switch signal detection is valid.)
- "#3025 enc-on" is "2". (The spindle encoder is serially connected.)
- "#3127 SPECSP/bit4" is "1". (The thread cutting start timing change is "Start thread cutting after receiving an external signal".)

(3) During the following functions, the thread cutting start timing change is invalid. During the following functions, the thread cutting command starts thread cutting after waiting for the Z phase signal from the encoder.

- Multi-part system simultaneous thread cutting cycle I (G76.1)
- Two-part system simultaneous thread cutting cycle II (G76.2)
- Spindle synchronization control I (G114.1)
- Spindle synchronization control II
- Guide bushing spindle synchronization
- Spindle superimposition control (G164)

(4) When the thread cutting start timing change is valid, do not use the thread recutting function. Even if the thread recutting function is used while the thread cutting start timing change is valid, the lead cannot be guaranteed.

## Program example

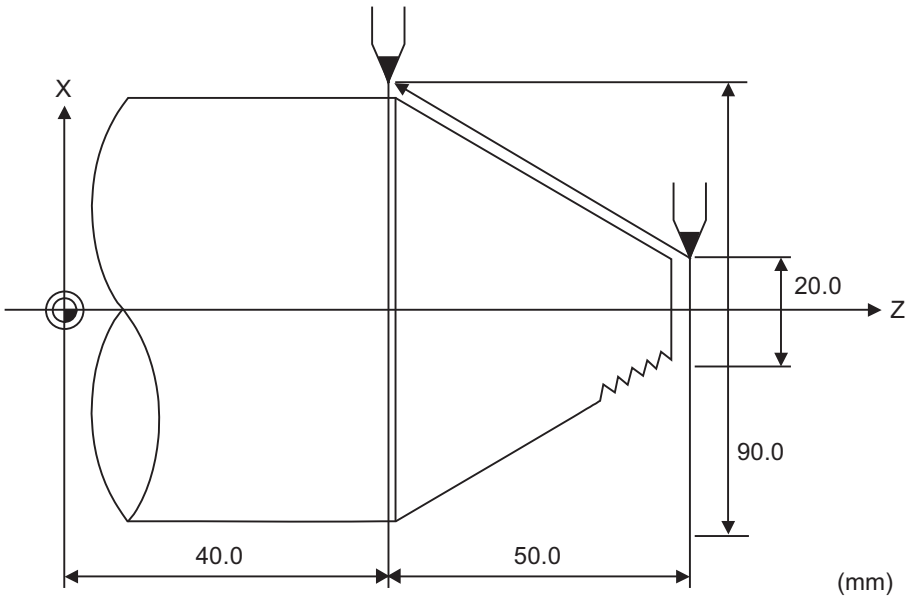


| | |
|---|---|
| G33 X90.0 Z40.0  E12.34567 ; | Absolute command |
| G33 U70.0 W-50.0 E12.34567 ; | Incremental command |

## 6.6.2 Inch Thread Cutting; G33

### Function and purpose

If the number of ridges per inch in the long axis direction is assigned in the G33 command, the feed of the tool synchronized with the spindle rotation will be controlled, which means that constant-lead straight thread-cutting and tapered thread-cutting can be performed.

### Command format

```
G33  Z/W__ X/U__ E__ Q__ ;
```

| | |
|---|---|
| Z,W,X,U | Thread end point |
| E | Number of ridges per inch in the long axis direction (axis which moves the most) (decimal point command can also be assigned) |
| Q | Thread cutting start shift angle, 0.001 to 360.000° |

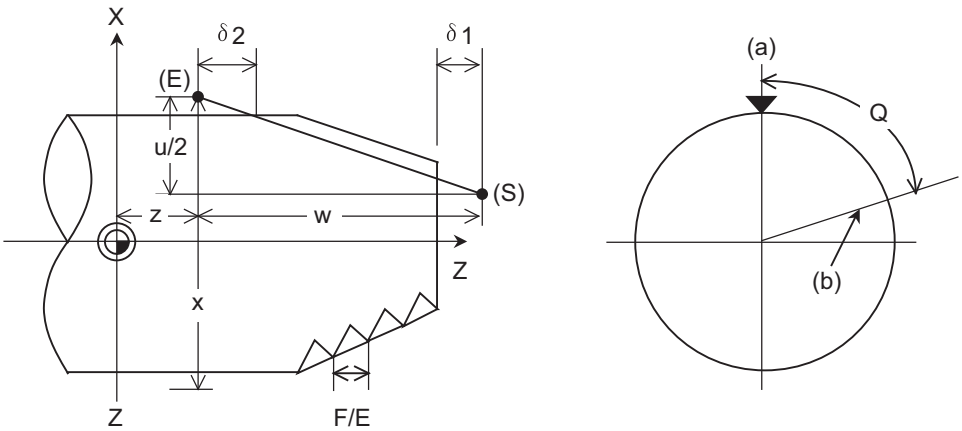


δ1 > Illegal lead at start of thread cutting

δ2 > Illegal lead at end of thread cutting

(S) Start point

(E) End point

(a) One-rotation synchronization signal

(b) Thread cutting start position

### Detailed description

(1) The number of ridges in the long axis direction is assigned as the number of ridges per inch.

(2) The E code is also used to assign the precision lead length, and whether the number of ridges or precision lead length is to be designated can be selected by parameter setting. (The number of ridges is designated by setting the parameter "#8156 Fine thread cut E" to "0".)

(3) The E command value should be set within the lead value range when converted to lead.

(4) See Section "Constant lead thread cutting" for other details.

### Program example

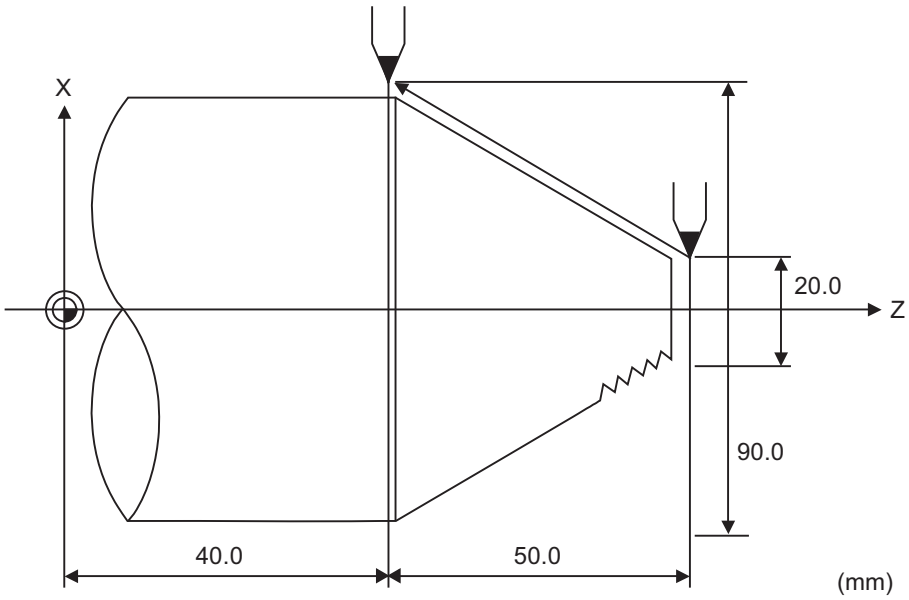


| | |
|---|---|
| G33 X90.0 Z40.0  E12.0 ; | Absolute command |
| G33 U70.0 W-50.0 E12.0 ; | Incremental command |

## 6.6.3 Continuous Thread Cutting ; G33

### Function and purpose

Continuous thread cutting is possible by assigning thread cutting commands continuously.
In this way, it is possible to cut special threads whose lead or shape changes.

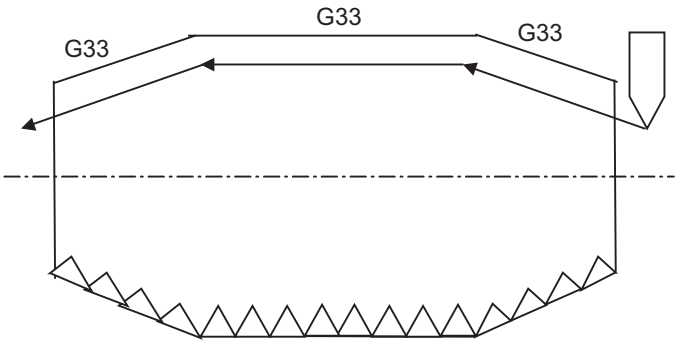


### Command format

**Continuous thread cutting**

```
G33 Z__/W__ X__/U__ F__/E__ Q__ ;
```

| | |
|---|---|
| Z/W, X/U | End point of thread cutting |
| F/E | Lead of long axis (axis which moves most) direction |
| Q | Thread cutting start shift angle, 0.001 to 360.000° |

### Detailed description

(1) The first thread cutting block in the continuous thread cutting command waits for the spindle's single rotation synchronization signal before starting thread cutting. From the second and following blocks, movement starts without waiting for the spindle's single rotation synchronization command.
Thus, the thread cutting start shift angle (Q) can be commanded only in the first block.

(2) G33 command can be omitted from the second and following blocks.

(3) When commanding continuous thread cutting, command the thread cutting commands in successive blocks. If any command other than G33 is issued in the middle of thread cutting, threads may not be cut correctly.
Note that if a command that does not involve axis movement (G04 dwell command, MST command, etc.) is commanded between the thread cutting command blocks, whether to wait for the spindle's single rotation synchronization signal after the 2nd block depends on the MTB specifications (parameter "#1270 ext06/bit6").

| # No. | Item | Details | Setting range |
|---|---|---|---|
| 1270 | ext06/bit6 | Set the continuous thread cutting Z phase wait operation.<br>0: If there is no movement command (MST command, etc.) between the thread cutting blocks, the 2nd block thread cutting waits for the spindle's single rotation synchronization signal before starting movement.<br>1: Even if there is no movement command (MST command, etc.) between the thread cutting blocks, the 2nd block thread cutting starts movement without waiting for the spindle's single rotation synchronization signal. | 0 / 1 |

(4) See "Constant lead thread cutting" for other details.

## 6.6.4 Variable Lead Thread Cutting; G34

### Function and purpose

Variable lead thread cutting is enabled by a command specifying a lead increment or decrement amount per turn of the screw.

### Command format

**Variable lead thread cutting**

| |
|---|
| **G34 X/U__ Z/W__ F/E__ K__ ;** |

| | |
|---|---|
| X/U Z/W | End point of thread cutting |
| F/E | Standard screw lead |
| K | Lead increment or decrement amount per turn of the screw |

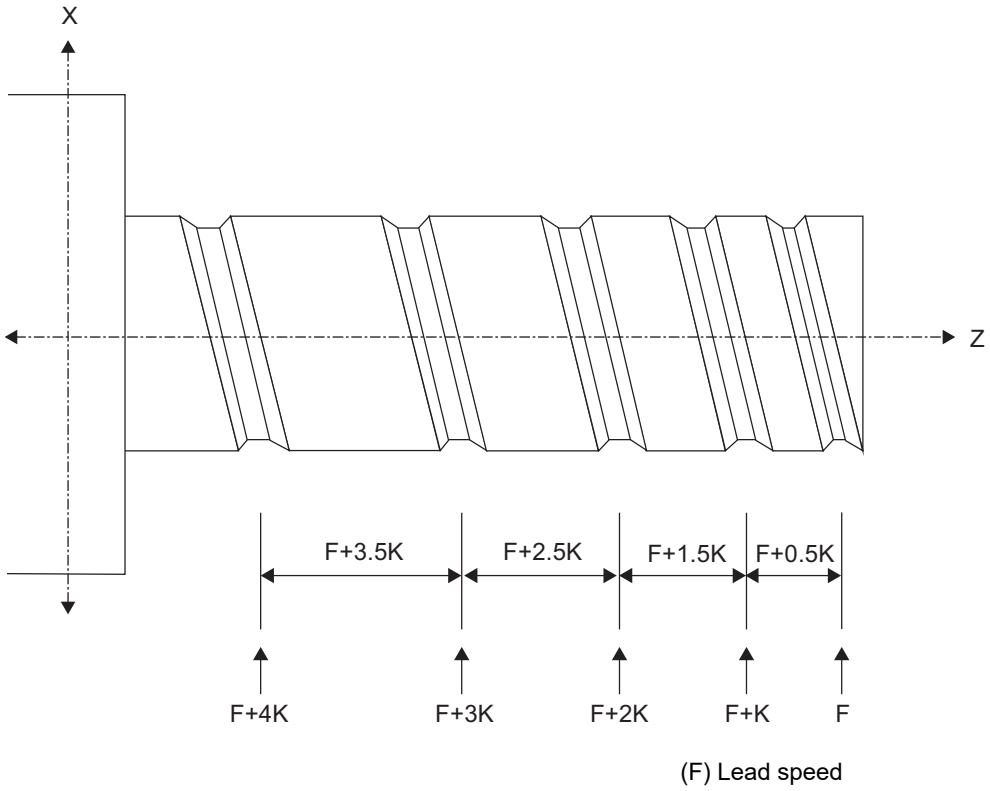


In the figure above, the X axis is a non-lead axis, and the Z axis is a lead axis.

## Detailed description

(1) The command range is as shown below.

Thread cutting metric input

| Input Setting unit | B (0.001 mm) | | C (0.0001 mm) | |
|---|---|---|---|---|
| Command Address | F (mm/rev) | E (mm/rev) | F (mm/rev) | E (mm/rev) |
| Minimum command unit | 1 (=0.0001)<br>(1.=1.0000) | 1 (=0.00001)<br>(1.=1.00000) | 1 (=0.00001)<br>(1.=1.00000) | 1 (=0.000001)<br>(1.=1.000000) |
| Command range | 0.0001 -<br>999.9999 | 0.00001 -<br>999.99999 | 0.00001 -<br>999.99999 | 0.000001 -<br>999.999999 |

| Input Setting unit | D (0.00001 mm) | | E (0.000001 mm) | | B/C/D/E |
|---|---|---|---|---|---|
| Command Address | F (mm/rev) | E (mm/rev) | F (mm/rev) | E (mm/rev) | K(n * mm/rev)<br>n: Number of pitches<br>Same as for F or E.<br>(Signed) |
| Minimum command unit | 1 (=0.000001)<br>(1.=1.000000) | 1 (=0.0000001)<br>(1.=1.0000000) | 1 (=0.0000001)<br>(1.=1.0000000) | 1 (=0.00000001)<br>(1.=1.00000000) | |
| Command range | 0.000001 -<br>999.999999 | 0.0000001 -<br>999.9999999 | 0.0000001 -<br>999.9999999 | 0.00000001 -<br>999.99999999 | |

Thread cutting inch input

| Input Setting unit | B (0.0001 inch) | | C (0.00001 inch) | |
|---|---|---|---|---|
| Command Address | F (inch/rev) | E (inch/rev) | F (inch/rev) | E (inch/rev) |
| Minimum command unit | 1 (=0.00001)<br>(1.=1.00000) | 1 (=0.000001)<br>(1.=1.000000) | 1 (=0.000001)<br>(1.=1.000000) | 1 (=0.0000001)<br>(1.=1.0000000) |
| Command range | 0.00001 -<br>39.37007 | 0.000001 -<br>39.370078 | 0.000001 -<br>39.370078 | 0.0000001 -<br>39.3700787 |

| Input Setting unit | D (0.000001 inch) | | E (0.0000001 inch) | | B/C/D/E |
|---|---|---|---|---|---|
| Command Address | F (inch/rev) | E (inch/rev) | F (inch/rev) | E (inch/rev) | K(n*inch/rev)<br>n: Number of pitches<br>Same as for F or E.<br>(Signed) |
| Minimum command unit | 1 (=0.0000001)<br>(1.=1.0000000) | 1 (=0.00000001)<br>(1.=1.00000000) | 1 (=0.00000001)<br>(1.=1.00000000) | 1 (=0.000000001)<br>(1.=1.000000000) | |
| Command range | 0.0000001 -<br>39.3700787 | 0.00000001 -<br>39.37007873 | 0.00000001 -<br>39.37007873 | 0.000000001 -<br>39.370078736 | |

(2) A positive value of K indicates incremental pitches.

Movement amount of one block (n pitches) = (F + K) + (F + 2K) + (F + 3K) + ... + (F + nK)

(3) A negative value of K indicates decremental pitches.

Movement amount of one block (n pitches) = (F - K) + (F - 2K) + (F - 3K) + ... + (F - nK)

(4) A program error will occur if the thread lead is not set correctly.

| Error No. | Details | Action |
|---|---|---|
| P93 | Illegal pitch value<br>(1) An invalid value is specified for F/E or K in a thread cutting command.<br>(2) The last lead goes outside of the F/E command range. | The last lead goes outside of the F/E command range.<br>$LL = \sqrt{(F^2 + 2KZ)}$<br>NP= (-F + LL) / K<br>LL : Last lead<br>NP : Number of pitches<br>Z : Lead axis length |

(5) The other details are the same as G33.
Refer to "Constant lead thread cutting ; G33".

## 6.6.5 Circular Thread Cutting; G35,G36

### Function and purpose

Circular thread cutting making the longitudinal direction the lead is possible.

### Command format

**Circular thread cutting Clockwise (CW)**

```
G35 X/U__ Z/W__ I__ K__ F/E__ Q__ ;
G35 X/U__ Z/W__ R__ F/E__ Q__ ;
```

**Circular thread cutting Counterclockwise (CCW)**

```
G36 X/U__ Z/W__ I__ K__ F/E__ Q__ ;
G36 X/U__ Z/W__ R__ F/E__ Q__ ;
```

| | |
|---|---|
| X/U | X axis circular end point coordinate (X is the absolute position of axis workpiece coordinate system, U is the incremental position from current position) |
| Z/W | Z axis circular end point coordinate (Z is the absolute position of workpiece coordinate system, W is the incremental position from current position) |
| I | X axis circular center (incremental position of circular center looking from start point) |
| K | Z axis circular center (incremental position of circular center looking from start point) |
| R | Circular radius |
| F/E | Longitudinal (axis with largest movement amount) direction lead<br>♦F: Normal lead thread cutting<br>♦E: Precision lead thread, inch thread |
| Q | Thread cutting start shift angle, 0 to 360.000° |

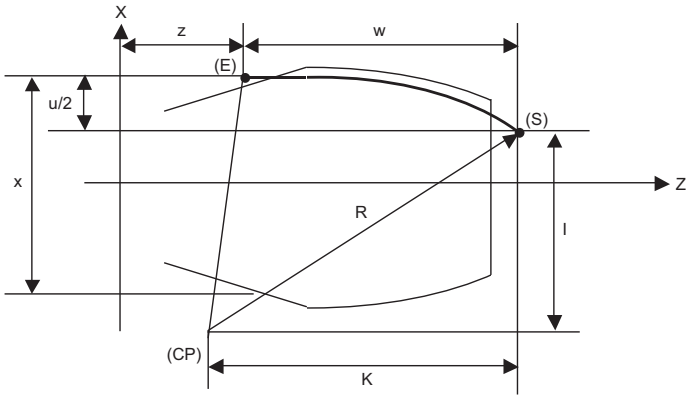


(S) Start point
(E) End point
(CP) Center

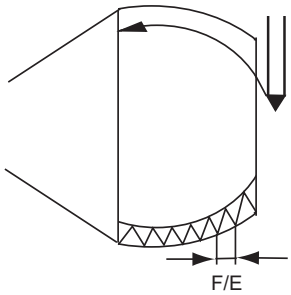


Longitudinal direction lead

## Detailed description

(1) A program error (P33) will occur if the start point and end point match or if the arc center angle is more than 180°.

(2) The following will occur if the start point radius and end point radius do not match.
- A program error (P70) will occur if the error ΔR is more than parameter "#1084 RadErr" (arc error).
- Interpolation will start from the arc center where the start point radius and end point radius match if the error ΔR is less than parameter "#1084 RadErr".

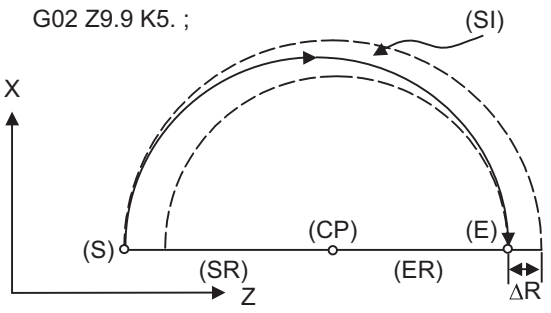


#1084 RadErr parameter value: 0.100
Start point radius = 5.000
End point radius = 4.900
Error Δ R =0.100

(S) Start point
(CP) Center
(E) End point
(SR) Start point radius
(ER) End point radius
(SI) Spiral interpolation

(3) A program error (P33) will occur if the "R" sign is negative.

(4) A program error (P33) will occur if there is no "I", "K" command and "R" command.

(5) The "R" command will have the priority if the "I" and "K" command and "R" command are issued in the same block.

(6) If the arc center is (0, 0), the arc command can be issued for two successive quadrants. As shown on the right, a program error (P33) will occur if an arc with more than three quadrants is issued.

[When Z axis is long axis]

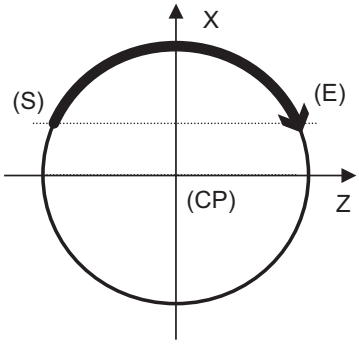


Program error due to more than three quadrants

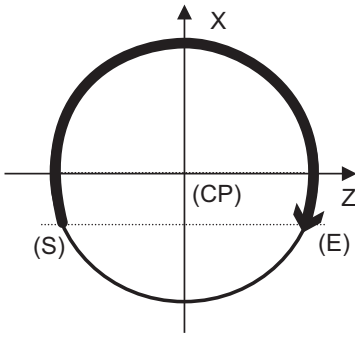


(S) Start point (E) End point (CP) Center

(7) When the movement amount is equal, the horizontal direction in the selected plane will be the long axis.

| Plane selection | Long axis when movement amount is equal |
|---|---|
| G17 (XY plane) | I axis |
| G18 (ZX plane) | K axis |
| G19 (YZ plane) | J axis |

(8) G36 is used for the two functions, automatic tool length measurement and circular thread cutting (CCW). Which function to be applied depends on the MTB specifications (parameter "#1238 set10/bit0" (circular thread cutting)).

When "#1238 set10/bit0" is set to "0"

| G code | Function |
|---|---|
| G35 | Circular thread cutting clockwise (CW) |
| G36 | Automatic tool length measurement X |

When "#1238 set10/bit0" is set to "1"

| G code | Function |
|---|---|
| G35 | Circular thread cutting clockwise (CW) |
| G36 | Circular thread cutting counterclockwise (CCW) |
| G37 | Automatic tool length measurement Z |
| G37.1 | Automatic tool length measurement X |
| G37.2 | Automatic tool length measurement Z |

(9) If the lead axis and non-lead axis cutting feedrate is faster than the clamp speed when thread cutting is started, an operation error (M01 0107) will occur, and thread cutting will not start.

(10) During thread cutting, the cutting feed rate may exceed the clamp speed to guarantee the lead. In this case, the operation error (M01 0107) will appear, but thread cutting will continue. However, if the "cutting feedrate > clamp speed" is established during circular thread cutting commanded in the second or following block of continuous thread cutting, automatic operation will be stopped just before the circular thread cutting command in the 2nd block, and the operation error (M01 0107) will appear.

(11) Continuous thread cutting is possible by assigning thread cutting commands continuously. In this way, it is possible to cut special threads whose lead or shape changes midway.
The continuous thread cutting command can be issued in the order of arc -> arc, arc -> constant lead, and constant lead -> arc.

(12) An illegal lead is normally produced at the start of the thread and at the end of the cutting because of servo system delay.
Thus, command the length of the required thread length and also the illegal thread length of the start and end of the thread cutting.
As another method, command the required thread length as a circular thread (G35/G36), and then command the illegal lead length before and after that command (start and end of thread cutting) as a constant lead thread (G33). (Continuous thread cutting in order of constant lead -> arc -> constant lead.)

## Relation with other functions

(1) A program error (P113) will occur if the G35/G36 command is issued to an axis not within the plane.

(2) Whether dry run is valid or invalid for thread cutting depends on the MTB settings. (When the parameter "#1279 ext15/bit4" is "1", the dry run is invalid. However, when the "Spindle OFF mode" signal (YCD3) is ON, the dry run is valid regardless of the parameter setting, and depends on the "Dry run" signal (YC15).)
When the dry run is valid, the feedrate based on the dry run is not synchronized with the spindle rotation.
The "Dry run" signal is checked at the start of thread cutting and any switching during thread cutting is ignored.

(3) If the feed hold switch is pressed during thread cutting, block stop will occur at the end point of the block following the block in which thread cutting is completed (when the thread cutting mode is terminated).

(4) Circular thread cutting will function normally even during mirror image.

(5) A program error (P201) will occur if the G35/G36 circular thread cutting command is issued in the finish shape program of the compound type fixed cycle for turning machining.

(6) A program error (P385) will occur if thread cutting corner rounding or corner chamfering is commanded during circular thread cutting or the next block.

(7) Geometric and circular thread cutting cannot be commanded simultaneously. If commanded simultaneously, a program error (P395 or P70) will occur.

(8) If thread cutting is commanded during nose R compensation, nose R compensation will be temporarily canceled, and thread cutting will be executed.

(9) Do not issue the circular thread cutting command during constant surface speed control. The thread will not be cut correctly because the spindle rotation speed will change during thread cutting.

## Precautions

(1) A program error (P39) will occur if G35/G36 is commanded when the additional specifications are not provided.

## 6.6.6 Thread Cutting Override

### Function and purpose

Conventional thread cutting is performed with the spindle override fixed at 100%. By this function, thread cutting feedrate can be changed by changing the spindle override depending on rough cutting, finish machining, etc.
The spindle speed during thread cutting is determined with the spindle override at the start of thread cutting.
The validity of this function depends on the MTB specifications. (Parameter "#1246 set18"/bit0)

### Detailed description

(1) Each thread must be cut securely in several steps. If the spindle speed is changed, threads may not be correctly cut. This function automatically compensates for the thread cutting start point shift angle using the spindle override value at the start of thread cutting. This ensures that thread is cut correctly even if the spindle override is changed.

(2) Spindle override change is enabled when the machine is not in a thread cutting cycle. The spindle override can also be changed during thread cutting, however, the spindle speed will change after thread cutting is finished. For continuous thread cutting, the spindle speed will change after the continuous thread cutting process is finished.

(3) Whether to perform the feed hold operation simultaneously when the spindle override is changed during thread cutting depends on the MTB specifications (parameter "#1246 set18"/bit1).

| #1246 set18/bit1 | Operation |
|---|---|
| 0<br>No feed hold activated | The machining program is continued without causing a block stop to take place after thread cutting. |
| 1<br>Feed hold activated | The feed hold operation is simultaneously executed. |

<Note>

- Changing the spindle override during thread cutting causes a block stop to occur at the end point of the block following the block in which thread cutting is completed.
- In the thread cutting or compound type thread cutting cycle, thread cutting cycle retract is preferentially executed if the specifications for thread cutting cycle retract are valid. (Refer to following figure.)

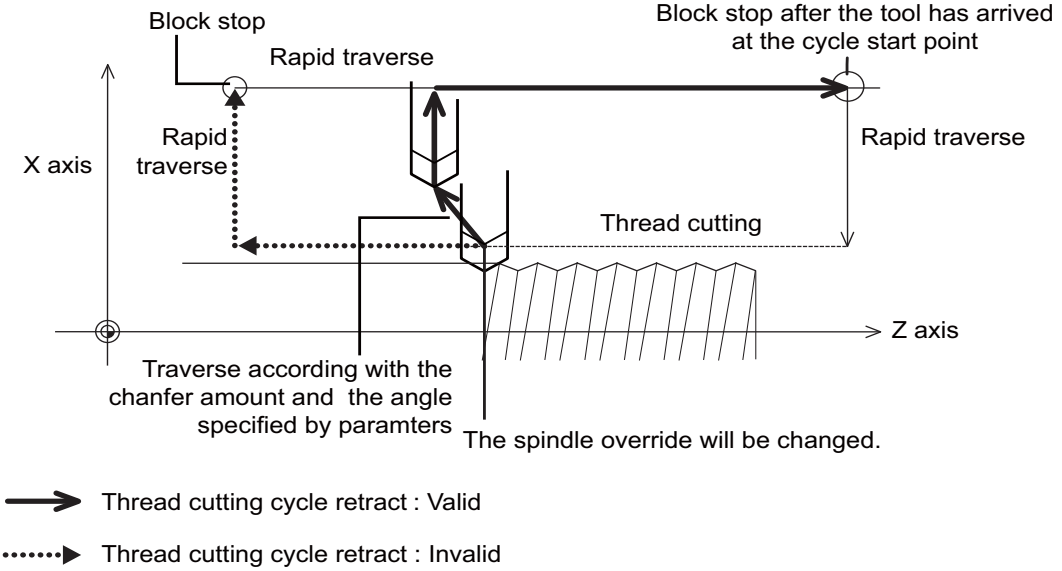

## Relationship with Other Functions

### Interlock signal

If the start of thread cutting is interlocked, the operations differ depending on the interlock signal.
The operation of the interlock signal depends on the MTB specifications.

(1) Block start interlock

Changing the spindle override while the interlock is active causes the spindle speed to change. After the interlock is reset, the compensation amount is calculated from the spindle override in effect at the time the interlock is reset and thread cutting is performed.
After the interlock is reset, the feed axis starts to move after waiting for the single rotation synchronization signal of the rotary encoder.
When #1246/bit1 is set to "1", changing the spindle override while the interlock is active does not cause feed hold to be activated.

(2) Cutting block start interlock

If the start of cutting blocks is interlocked when the thread cutting is started, changing the spindle override while the interlock is active does not change the spindle speed. It will change after thread cutting is finished. After the interlock is reset, the compensation amount is calculated from the spindle override in effect at the time the interlock is set and thread cutting is performed.
After the interlock is reset, the feed axis starts to move after waiting for the single rotation synchronization signal of the rotary encoder.
When #1246/bit1 is set to "1", feed hold is activated by changing the spindle override while the interlock is active. However, feed hold is activated as soon as the lead axis starts moving.
(If the retract signal is input, retract is performed; otherwise, operation stops at the end point of the block following the block in which thread cutting is completed.)

(3) Axis interlock

The operation is the same as that of the cutting block start interlock.
However, the lead axis starts movement without waiting for the rotary encoder single rotation synchronization signal after the interlock is reset, causing the thread cutting position to be misaligned.

## Precautions

(1) Changing the spindle override must be completed before thread cutting is started. Once the spindle override is changed, be sure to wait until the spindle speed is stabilized before starting machining. If the override is changed just before thread cutting is started or machining is started while the spindle speed is unstable, the shift angle of the thread cutting start position will not be correctly compensated for.

(2) Variable lead thread cutting

Although this function is also valid for variable lead thread cutting, it is not ensured that the tool passes the same path it took before the spindle override was changed. (This happens especially when the incremental position (K) of the lead is large, the number of threads is large, or the amount of change in the spindle override is large) Do not change the value of the spindle override during the variable lead thread cutting process.

(3) This function does not compensate for the approach distance. If the spindle override is set to 100% or more, be sure to provide a longer approach distance.

(4) The retracting path at thread cutting varies depending on the spindle override as shown below. (Spindle speed overridden by 100% or less results in earlier retraction, whereas spindle speed overridden by 100% or more results in later retraction.)

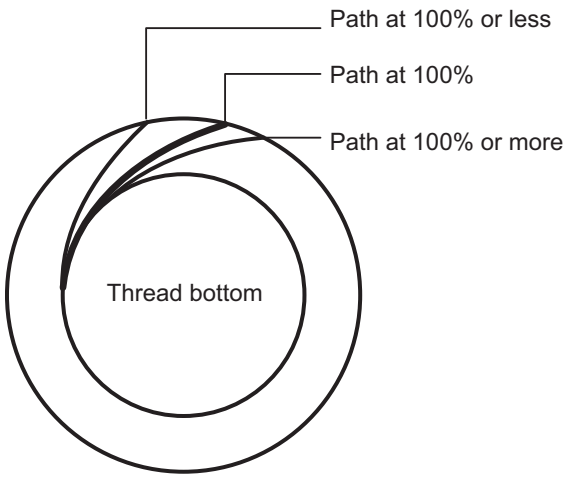


Front view of workpiece

(5) This function does not support multi-part system simultaneous thread cutting.

(6) This function only supports a serially-connected encoder (parameter "#3025 enc_on"). For information of the specifications of your machine, contact the MTB.

## 6.6.7 Variable Feed Thread Cutting

### Function and purpose

This function changes the cutting feedrate by the spindle override at the time of thread cutting.
By using this function, the machining condition during thread cutting can be changed.
The validity of this function depends on the MTB specifications. Refer to the specifications of your machine tool.

### Detailed description

#### Enable variable feed thread cutting parameter

This function is enabled when "#8045 Varying spd thread" is set to "1".
Since #8045 is a parameter per part system, set it to "1" for each part system that uses this function.
If #8045 is set to "1", but none of the following conditions are satisfied, the thread cutting will not be started. An operation error (M01 1029) will occur.

(1) The spindle encoder inputs are provided via serial. (This depends on the MTB specifications. "#3025 enc_on")
(2) The drive unit for the spindle, thread cutting lead axis, and axes configuring plane selected when thread cutting is performed are MDS-E Series.
(3) The cutting feed acceleration/deceleration type for the thread cutting lead axis and axes configuring plane selected when thread cutting is performed are not set to soft acceleration/deceleration. (Parameter "#2003 smgst")
(4) The spindle that is attempting thread cutting is not currently executing the following functions.

- Synchronous tap
- Spindle synchronization
- Guide bushing spindle synchronization
- Spindle/C Axis Control

#### Corresponding thread cutting command

This function can be used when any of the following thread cutting commands are issued.

| | |
|---|---|
| G33 | Thread cutting |
| G34 | Variable lead thread cutting |
| G35/G36 | Circular thread cutting (CW/CCW) |
| G78 | Thread cutting cycle |
| G76 | Compound thread cutting cycle |
| G76.1 | Multi-part system simultaneous thread cutting cycle I |
| G76.2 | Two-part system simultaneous thread cutting cycle II |

(This function can be used regardless of G code lists.)

## Cutting feedrates

(1) Changing feedrate

During thread cutting, the cutting feedrate can be changed by changing the spindle override.
Changing the spindle override will change the feedrate. Therefore, if the spindle override is set to "0", the spindle is stopped and feed is stopped. This results in an operation error (M01 0105).
The cutting feedrate during thread cutting is calculated by the following formula.

F = (S * OVR) * P

F: Cutting speed (mm/min)

S: Spindle rotation speed (r/min)

OVR: Spindle override (%)

P: Screw pitch (mm/rev)

(2) Override

Changing the rapid traverse override or cutting override does not change the cutting feedrate. For that reason, setting the cutting feed override to "0" does not cause the feed to stop.

(3) Speed clamp

If the cutting feedrate is found to exceed the clamp speed when thread cutting starts, an operation error (M01 0107) will occur.
If the spindle override is changed while the feed axis is moving and the cutting feedrate exceeds the clamp speed, an operation error (M01 0107) will occur. However, thread cutting continues with the cutting feedrate exceeding the clamp speed.

(4) Dry run

If a dry run is valid during thread cutting with this function, the feedrate is not synchronized with the spindle rotation. Therefore, the feedrate is changed by the feed override.
The validity of dry run during thread cutting depends on the MTB specifications (parameter"#1279 ext15/bit4").

## Acceleration/deceleration of the spindle during thread cutting

If this function is used to change the spindle override during thread cutting, the acceleration/deceleration of the spindle is performed in three steps based on the spindle speed as shown in the table below. The three-step acceleration/deceleration is decided by the parameters shown in Figure (a) below.
These parameters can be set for each gear speed.

Correspondence between spindle speeds and number of steps in the acceleration/deceleration during thread cutting

| Range of spindle speeds during thread cutting (S: Spindle rotation speed during thread cutting) | Number of steps in the multi-step acceleration/deceleration |
|---|---|
| S ≤ vfths1 | 1 |
| vfths1 < S ≤ vfths2 | 2 |
| vfths2 < S | 3 |

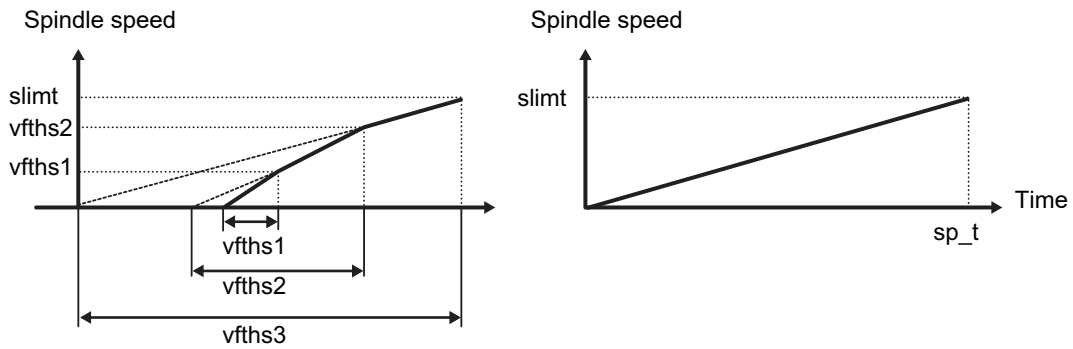


(a) Multi-step acceleration/deceleration during thread cutting

(b) Normal acceleration/deceleration

To perform three-step acceleration/deceleration, the parameters must be set as shown below.

- vfths1 < vfths2 < slimit
- One or more of these parameters; "vfths1", "vfths2", "vftht1", "vftht2", and "vftht3", must be set to nonzero.

Acceleration/deceleration is performed for each step with the acceleration rate calculated based on the specified spindle speed and time constant. If either of them is not specified, the acceleration rate is not calculated, and that step becomes invalid.

(1) For the step that became invalid, acceleration/deceleration is performed using the acceleration rate in the step that follows.
For example, if vfths1 is set to "0", multi-step acceleration/deceleration is not performed in the first step. So, acceleration/deceleration is performed in the second step for an area where S is greater than or equal to vfths1 given in the table above.

(2) If the acceleration rate is not specified for the next step, acceleration/deceleration using the current acceleration rate continues.
For example, if vftht3 is set to "0", multi-step acceleration/deceleration is not performed in the third step. Therefore, acceleration/deceleration is performed in the second step for an area where "vfths2 is smaller than S" described in the table above.

(3) If acceleration rate is not calculated for all steps, multi-step acceleration/deceleration is not performed and normal acceleration/deceleration is performed.
For example, if all of vftht1, vftht2, and vftht3 are set to "0", multi-step acceleration/deceleration is not performed on all steps. For that reason, the acceleration/deceleration of the spindle during thread cutting is performed using the normal acceleration rate of the spindle.

In addition, if the spindle speed is set so that vfths1 is greater than or equal to vfths2, the second step becomes invalid. For a range within which the spindle speed is equal to or smaller than vfths1, acceleration/deceleration is performed using the acceleration rate in the first step. For a range within which the spindle speed is equal to or greater than vfths1, acceleration/deceleration is performed using the acceleration rate in the third step.

### Spindle mode and gain changeover during thread cutting

This function changes the spindle to the spindle synchronization mode at the start of thread cutting.
The position loop gain of the axis that configures the lead axis and selected plane is automatically changed over to a value that is equal to the spindle synchronous position loop gain of the spindle to be used.
These are reverted back to their original state at the end of thread cutting.

- When using this function, "spindle synchronous position loop gain" of the spindle must be adjusted.
- When the spindle is under spindle synchronization and SHG control is enabled, SHG control is also enabled for axes configuring lead axis and selected planes during variable feed thread cutting.

In the mode changeover at the start of thread cutting, phase alignment is performed to change the spindle mode. The phase alignment takes 0 to a few seconds. Mode changeover at the end of thread cutting only needs a few moments.
At each changeover point, the in-position check is performed on axes on which gain changeover is carried out.
Mode changeover takes place at the start of thread cutting even if a dry run during thread cutting is enabled or the feed axis is in a machine lock condition.

In the spindle mode changeover, the parameter "#13036 SP036" may cause coil changeover because the spindle is in the spindle synchronization mode.
The timing of spindle mode changeover varies depending on the thread cutting command or continuous thread cutting. The following provides description about the thread cutting commands (G33, etc.), thread cutting cycle command (G78), and compound type thread cutting cycle commands (G76, etc.).

(1) Changeover point when thread cutting is performed singly and when thread cutting is performed continuously

At the start of thread cutting, changeover takes place just before the thread cutting command. At the end of thread cutting, it takes place once a tool has been retracted. For continuous threads, changeover does not take place at block-to-block connections in a thread cutting command.

**Thread cutting command**

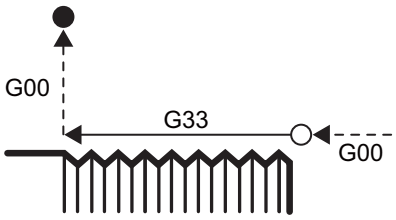


**Continuous thread cutting command**

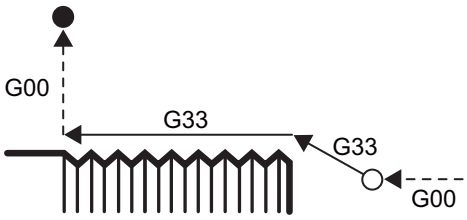


○: Changeover point at the start of thread cutting

●: Changeover point at the end of thread cutting

(2) Changeover point for the thread cutting cycle (G78)

For the thread cutting cycle, changeover takes place just before the thread cutting command is executed after the tool has approached the programmed position. Changeover at the end of thread cutting takes place after start position return has been performed.
When thread cutting cycles are to be executed in sequence, changeover takes place after the tool has approached the programmed position in the initial cycle and after start position return has been performed in the final cycle.
If spindle stop (M5) is commanded immediately after G78, the spindle decelerates at the multi-step acceleration/deceleration time constant during thread cutting.

**Cycle command**

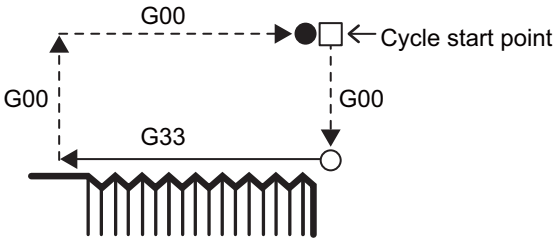


**Succession of cycle commands**

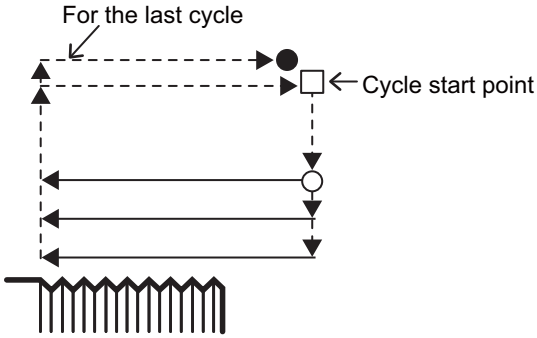


○: Changeover point at the start of thread cutting

●: Changeover point at the end of thread cutting

(3) Changeover point for the compound type thread cutting cycle (G76, G76.1, G76.2)

In the compound type thread cutting cycle (G76) or multi-part system simultaneous thread cutting cycle (G76.1 or G76.2), thread cutting is performed multiple times with a single command For these cycles, changeover takes place before thread cutting after the tool has approached the programmed position in the initial cycle and after start position return has been performed in the final cycle.
However, if these commands are specified consecutively, mode changeover takes place at the start of and end of thread cutting for each command.

**Compound thread cutting cycle**

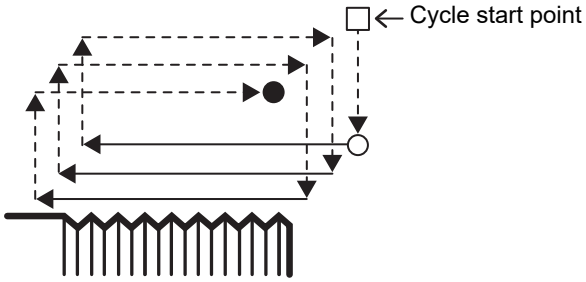


○: Changeover point at the start of thread cutting

●: Changeover point at the end of thread cutting

## Relationship with Other Functions

### Spindle override in thread cutting

When the "#8045 Varying spd thread" is set to "1", the "spindle override in thread cutting" function is disabled.

**Note**

(1) The "spindle override in thread cutting" performs thread cutting using the spindle override at the start of thread cutting and does not allow the user to change the spindle override during thread cutting. Since #8045 is incompatible with this function, the "spindle override in thread cutting" function is disabled if #8045 is set to "1".

### Thread recutting

This function can also be used when reworking threads using the thread recutting function. In addition, the spindle override can be changed during reworking.

### Multi-part system simultaneous thread cutting

To use this function in the multi-part system simultaneous thread cutting, set "#8045 Varying spd thread" to "1" for all the part systems to be used.
If the setting of #8045 differs between the part systems, thread cutting is performed using the individual setting for the appropriate part system.
Observe other precautions regarding the multi-part system simultaneous thread cutting.

## Precautions

(1) Depending on the cutting feed speed, the illegal lead length at the time of thread cutting will change. Because increasing the cutting feedrate causes the illegal lead length to increase, be sure to keep approach distance that is long enough.

(2) If the cutting feedrate exceeds the clamp speed when variable feed thread cutting is started, an operation error (M01 0107) will occur and machining cannot be continued. In such cases, it is required to interrupt the operation using reset and change the spindle override before performing thread cutting again.

(3) The coil will not be switched during the thread cutting using this function. As a result, changing the spindle override may cause the spindle speed to change to a value outside the range specified for the motor of the selected coil. Avoid performing the thread cutting under these circumstances.

(4) This function changes over the position loop gain for axes configuring lead axis and selected planes during thread cutting. The gain, once it is changed over, may be reduced so that it is matched to the spindle. Reduced gain in a thread cutting cycle command may cause the actual position (position that is fed back) of the machine to be shifted inward compared to the commanded path in the appropriate cycle.

(5) Gain changeover is not carried out for an axis with Servo OFF, an axis to which a current limit is applied, an axis for which axis detachment is specified and manual movement axes of simultaneous operation of manual and automatic modes. Therefore, if they are reset after thread cutting is started and thread cutting is performed using axes including them, the given accuracy will not be achieved because gain and other settings are not appropriate.

(6) In a machine that performs turning for a single spindle in two part systems, if one part system starts thread cutting while the other is in the turning process, the spindle accelerates or decelerates based on the spindle phase alignment. Even when machining is in progress, the other part system may cause the spindle to accelerate or decelerate.

(7) A plane selection switch command issued during variable feed thread cutting causes a program error (P34).

(8) When the tool is retracted without chamfering, the retracting path varies depending on the spindle override value as shown below. (Screw is viewed from its bottom.)

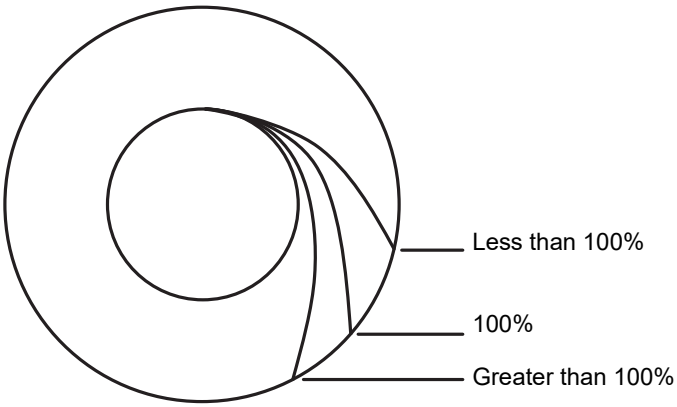


Screw viewed from its bottom

(9) Refer to precautions on each thread cutting command.

## 6.6.8 Thread Cutting Time Constant

### Function and purpose

Usually, incorrect lead parts occur at the start and the end of thread cutting due to the acceleration/deceleration of the NC control axis. However, the acceleration/deceleration time, which causes incorrect lead parts, can be reduced by applying the thread cutting time constant to the NC control axis during the thread cutting so that the incorrect thread parts can be reduced. Additionally, the machining time can be reduced as much as the acceleration/deceleration time reduction of thread cutting.

**Note**

(1) The use of this function requires the thread cutting time constant specifications and cutting feed acceleration/deceleration specifications.
Also, the cutting feed acceleration/deceleration type must be set to the primary delay acceleration/deceleration or linear acceleration/deceleration.
Refer to the MTB specifications for details (parameters "#2620 thr_t" and "#2003 smgst").

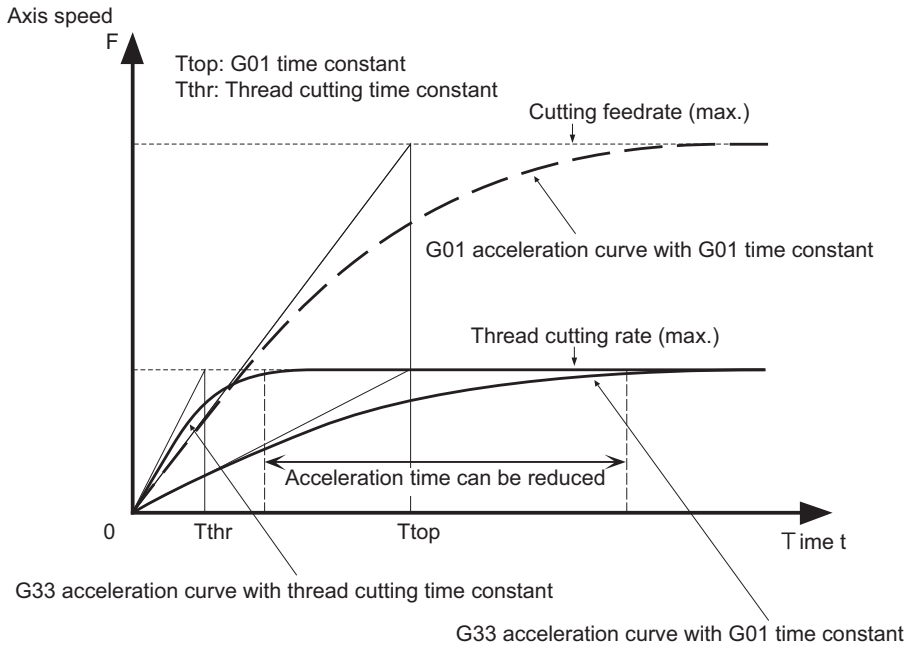


When executing the thread cutting command or executing the thread cutting command in the thread cutting cycle, carry out feed axis acceleration/deceleration in accordance with the MTB settings (thread cutting time constant parameter "#2620 thr_t").
The following shows the operation when a G33 or G34 command is issued.

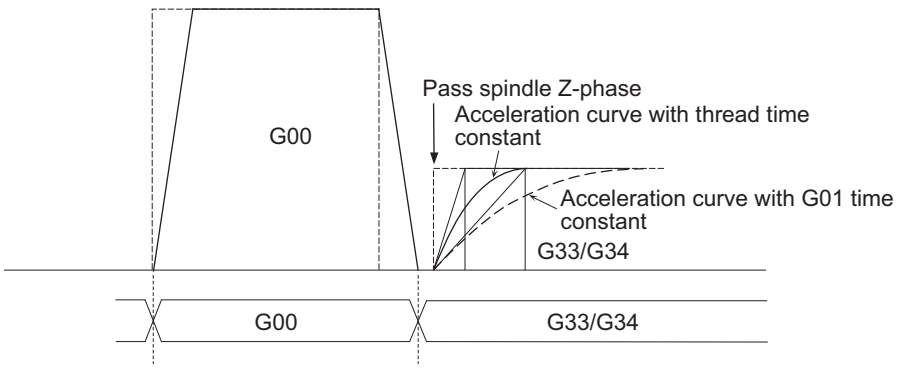


When the thread cutting time constant is valid, thread cutting is clamped at the speed determined in the MTB specifications (parameter "#2619 thr_clamp").

## Relationship with Other Functions

### Control axis superimposition control

This function is invalid for a thread cutting command that is issued during control axis superimposition control. (Operated with the superimposition time constant.)

### Arbitrary axis superimposition control

This function is invalid for a thread cutting command that is issued during arbitrary axis superimposition control. (Operated with the superimposition time constant.)

### Inclined axis control

To use the axis in the inclined-axis control mode for thread cutting, the thread cutting time constant parameter "#2620 thr_t" must be set to the same value for each of two axes that are paired for inclined-axis control. If a different value is specified, it causes a thread cutting failure.
These settings depend on the MTB specifications.

### Program check operation

This function is invalid for a thread cutting command that is issued during program check operation. (Operated with the G01 cutting feed time constant.)

## Precautions

(1) If the value of the thread cutting clamp speed parameter "#2619 thr_clamp" exceeds that of the cutting feed clamp speed parameter "#2002 clamp", thread cutting is clamped with the value of the cutting feed clamp speed parameter.
These parameter values depend on the MTB specifications.

(2) If the cutting feed acceleration/deceleration type (parameter "#2003 smgst") is set to a type other than soft acceleration/deceleration, linear acceleration/deceleration is applied to the acceleration/deceleration during thread cutting.

## 6.6.9 Thread Cutting Start Shift Angle Operation Switching

### Function and purpose

When the thread cutting start shift angle is commanded, the thread cutting can be started from the thread cutting start shift angle regardless of whether the Z phase has been passed.
This can reduce the period from the time when the thread cutting is commanded to the time when the actual cutting starts.
The validity of this function depends on the MTB specifications (parameter "#1260 set32/bit4").

### Detailed description

This function is available for a thread cutting operation for which the thread cutting start shift angle shown below can be commanded. A thread cutting operation for which this function is not available remains unchanged regardless of the parameter setting.

| Function name | G code |
|---|---|
| Thread cutting | G33 (G32) (*1) |
| Circular thread cutting | G35, G36 |
| Thread cutting cycle | G78 (G92) (*1) |
| Compound type thread cutting cycle | G76 (*2) |

(*1) The value enclosed in parentheses ( ) indicates the G code that is available when "#1037 cmdtyp" is set to 3, 5, or 7.

(*2) Available only when the MITSUBISHI CNC special format is specified.

| Case where thread cutting starts after the Z phase has been passed ("#1260 set32/bit4" is "0") | Case where thread cutting starts regardless of whether the Z phase has been passed ("#1260 set32/bit4" is "1") |
|---|---|
| 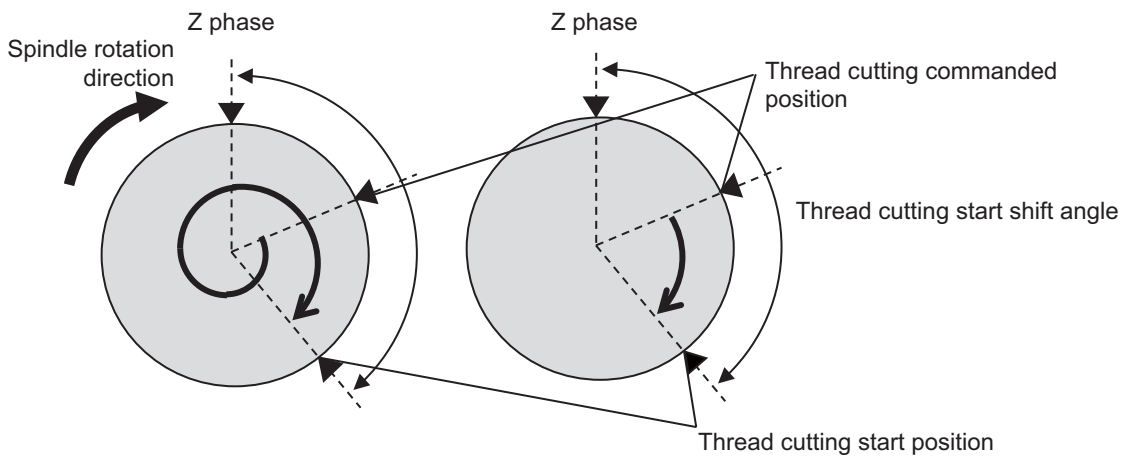  | |
| The spindle may rotate one or more revolutions until the cutting starts, depending on the position at which the thread cutting is commanded. | It is possible to reduce the period from the time when the thread cutting is commanded to the time when the actual cutting begins. |

### Precautions

(1) This function is available only when the thread cutting encoder pulse is directly input from the spindle drive unit. When the encoder pulse input port of the NC main unit is used, the thread cutting starts from the thread cutting start shift angle after the Z phase has been passed once, regardless of the setting of the parameter "#1260 set32/bit4".
The thread cutting encoder pulse setting depends on the MTB specifications (parameter "#3205 enc_on").

(2) When performing two-part system simultaneous thread cutting II, do NOT use this function. The position of the thread cutting command that is executed in two-part system simultaneous thread cutting II differs by each thread cutting command; therefore, the part system that first starts thread cutting may be changed for each instance of thread cutting.

## 6.6.10 Thread Cutting Feed Forward

### Function and purpose

Feed forward control can be performed for the thread cutting command.
This can shorten the incomplete thread area.

### Detailed description

(1) Feed forward control is enabled based on the settings of parameters "#2010 fwd_g" and "#1570 Sfilt2" when all the conditions shown below are satisfied.
- The cutting mode (G64) is modal.
- The feed forward control request signal is set to ON.
- Any one of the thread cutting commands shown below is modal.

| G code | Function name |
|---|---|
| G32, G33 | Thread cutting |
| G34 | Variable lead thread cutting |
| G35 | Circular thread cutting CW |
| G36 | Circular thread cutting CCW |

(2) When the thread cutting cycle (G78) is commanded, this function is enabled with the thread cutting command for each cycle.

(3) If a greater value is set to "#2010 fwd_g", it may cause machine vibrations. In this case, set a lower value to "#2010 fwd_g" or specify "#1570 Sfilt2"; this will help ensure smooth speed fluctuation and reduce machine vibrations.

### Program example

The following shows an operation example in the case where the machining program below is executed when the parameters below are specified while the feed forward control request signal (FFC) is set to ON.

[Parameter setting ($1)]

| | $1 |
|---|---|
| #1570 | 15 |

| | X | Z |
|---|---|---|
| #2010 | 40 | 40 |

[Machining program]

```
:
N11 S1000;
N12 M3;
N13 G54 G00 X20. Z30.;
N14 G00 X15.;
N15 G33 Z10. F1.5;
N16 G00 X20.;
:
```

[Timing chart]

[When this function is not used]

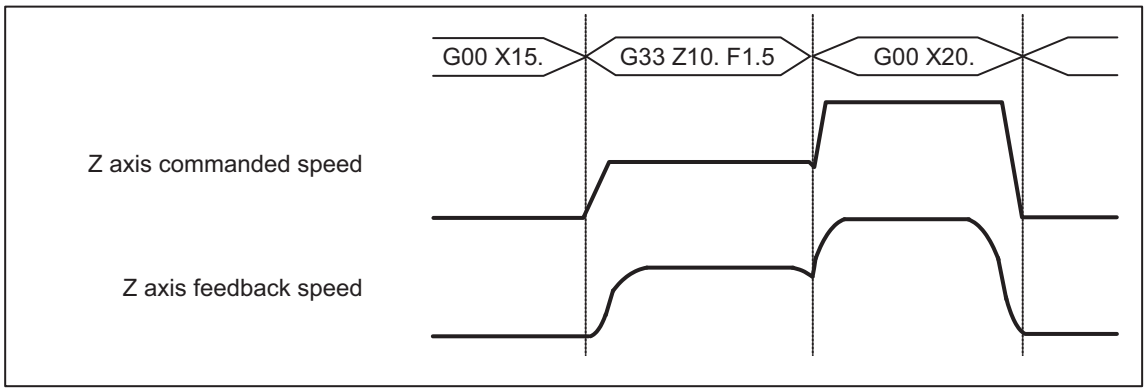


[When this function is used]

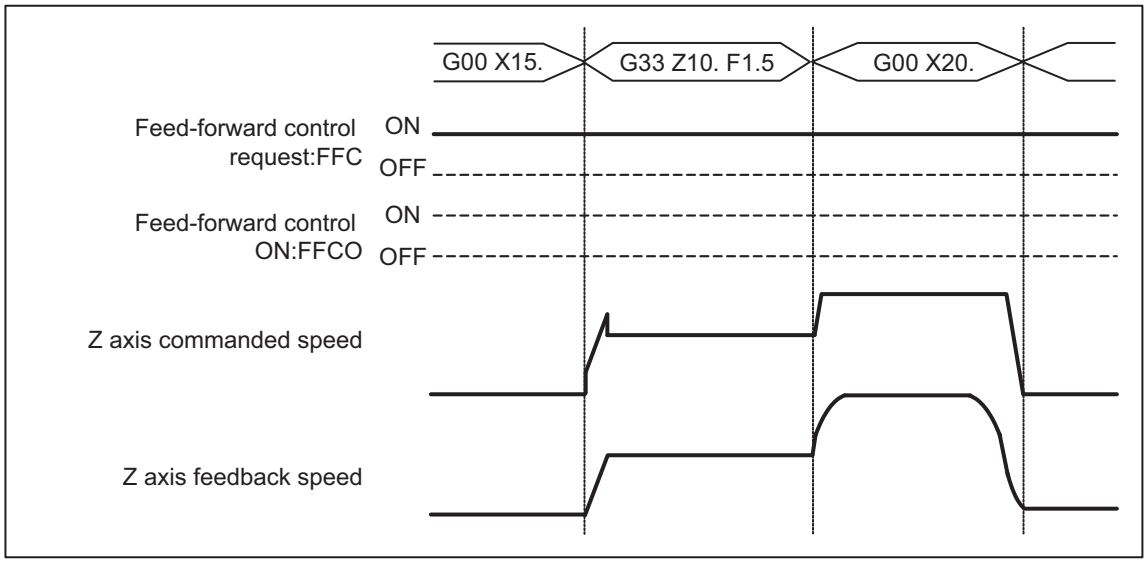


## Relationship with other functions

The table below shows case (1) where the feed forward control request signal is set to ON for the part system in which other functions are enabled and case (2) where other functions are commanded for the part system in which the feed forward control request signal is set to ON. (Symbol "o" indicates that a combination is available.)

| Function name | (1) | (2) |
|---|---|---|
| Mixed control I | o | Program error (P501) |
| Mixed control II | o | Operation error (M01 1035) |
| Control axis superimposition I (*1) | Operation error (M01 1060) (*2) | Operation error (M01 1004) |
| Control axis superimposition II (*1) | | |
| Control axis synchronization between part systems I (*1) | Operation error (M01 1060) (*2) | Operation error (M01 1037) |
| Control axis synchronization between part systems II (*1) | | |

(*1) The same operation is performed for each of the part systems that contain the superimposed axis or synchronized axis.

(*2) An alarm is output only to the part system in which the feed forward control request signal is set to ON.

## Precautions

(1) The settings of parameters "#1570 Sfilt2" and "#2010 fwd_g" can be switched using machining condition selection I and parameter input by program.

(2) When using this function in multiple part systems, set the same value to the parameter "#1570 Sfilt2" in all part systems.

(3) When enabling the feed forward control for two-part system simultaneous thread cutting, set the same setting values to parameters in both part systems, and set the feed forward control request signal ON for both part systems.

(4) To perform the thread recutting, set the same conditions as for thread cutting.

(5) Before issuing the thread cutting command to perform the feed forward control for, set the feed forward control request signal. When the feed forward control request signal is set to ON during the thread cutting (G32 to G36) or while a block to retract the thread cutting tool is being executed, the feed forward control is not enabled, however, it is enabled when the thread cutting (G32 to G36) command is issued again.

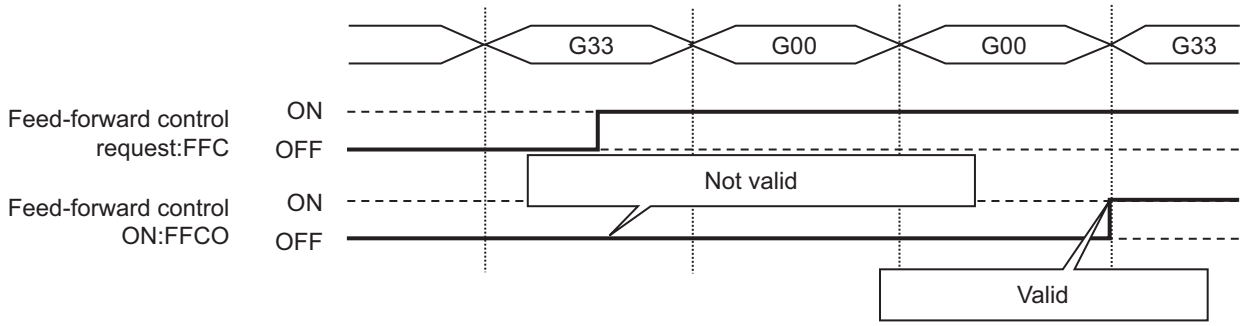


(6) If the feed forward control request signal is changed from ON to OFF while the thread cutting command (G32 to G36) is modal with the feed forward control enabled, or while the block to retract the thread cutting tool is being executed, the feed forward control is maintained up to the end of the retraction block.

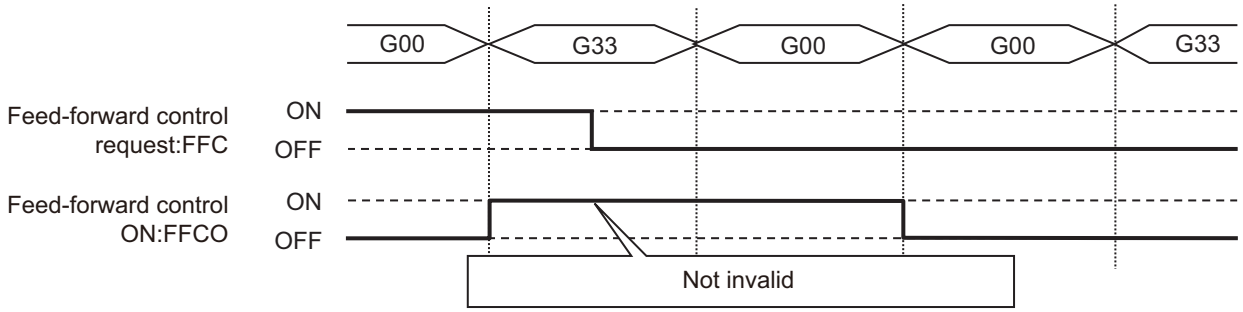


(7) When the thread cutting feed forward control is enabled, the program waits for "all axes smoothing zero" at the end of the thread cutting tool retraction block before executing the next block.

(8) If the thread cutting tool retraction command is a G1 command while thread cutting feed forward control is enabled, feed forward control is also applied to this retraction command based on the settings of the parameters "#2010 fwd_g" and "#1570 Sfilt2".

# 6.7 Helical Interpolation; G02, G03

## Function and purpose

When this interpolation is performed with 3 orthogonal axes, the tool will travel helically when circular interpolation is executed for any 2 axes and, at the same time, when another 1 axis is synchronized with the rotation of the circular and linear interpolation is executed synchronously with the rotation of the circular arc.
This command must be issued as the combination of the circular interpolation command with the height axis.

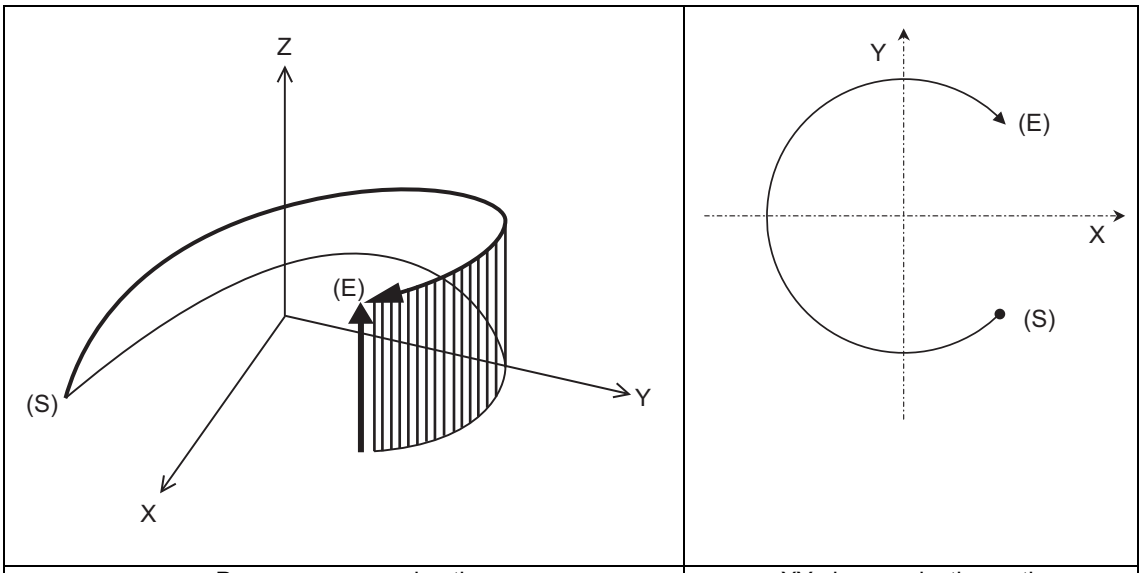


| Program command path | XY plane projection path |
|---|---|

(S) Start point
(E) End point

Program command path

Circular interpolation components

Linear interpolation components

## Command format

### Helical interpolation command (Specify arc center)

```
G17 G02/G03 X/U_ Y/V_ Z/W_ I_ J_ P_ (,P_) F_ ;
G18 G02/G03 Z/W_ X/U_ Y/V_ K_ I_ P_ (,P_) F_ ;
G19 G02/G03 Y/V_ Z/W_ X/U_ J_ K_ P_ (,P_) F_ ;
```

### Helical interpolation command (Specify radius (R))

```
G17 G02/G03 X/U_ Y/V_ Z/W_ R_ F_ ;
G18 G02/G03 Z/W_ X/U_ Y/V_ R_ F_ ;
G19 G02/G03 Y/V_ Z/W_ X/U_ R_ F_ ;
```

| | |
|---|---|
| G17, G18, G19 | Arc plane<br>G17: XY plane<br>G18: ZX plane<br>G19: YZ plane |
| G02/G03 | Arc rotation direction<br>G02: Clockwise<br>G03: Counterclockwise |
| X/U, Y/V, Z/W | Arc end point coordinates:<br>(X, Y) (or (U, V)) is set in G17, (Z, X) (or (W, U)) in G18, and (Y, Z) (or (V, W)) in G19.<br>Linear axis end point coordinates:<br>Z (or W) is set in G17, Y (or V) in G18, and X (or U) in G19. |
| I, J, K | Arc center coordinates:<br>(I, J) is set in G17, (K, I) in G18, and (J, K) in G19. |
| P/,P | Number of pitches |
| R | Circular arc radius |
| F | Feedrate |

**Note**

(1) In this manual, the following setting descriptions are used. I axis: X; J axis: Y; K axis: Z

(2) If pitch count "P" and ",P" are designated at the same time, precedence is given with ",P" command.

(3) If the number of pitches is "0", address P can be omitted.

(4) If the radius (R) is designated, the number of pitches is ignored even when it is commanded.

(5) Two or more axes can be designated for the linear interpolation axis.

## Detailed description

### Speed designation during the helical interpolation

Speed designation "F" during the helical interpolation has the following types. The available type depends on the MTB specifications.

| Parameter #1235/bit0 | Tangent speed (command value of address "F") |
|---|---|
| 0 | Speed designation for normal helical interpolation<br>Commands the tangent speed (equivalent to "fb" in the lower-right figure) including interpolation component of the 3rd axis. |
| 1 | Speed designation by the arc plane component<br>Commands the tangent speed (equivalent to "fa" in the lower-left figure) in the arc plane.<br>At this time, the NC automatically calculates the helical interpolation tangent speed "fb" so that the tangent speed on the arc plane is "fa". |

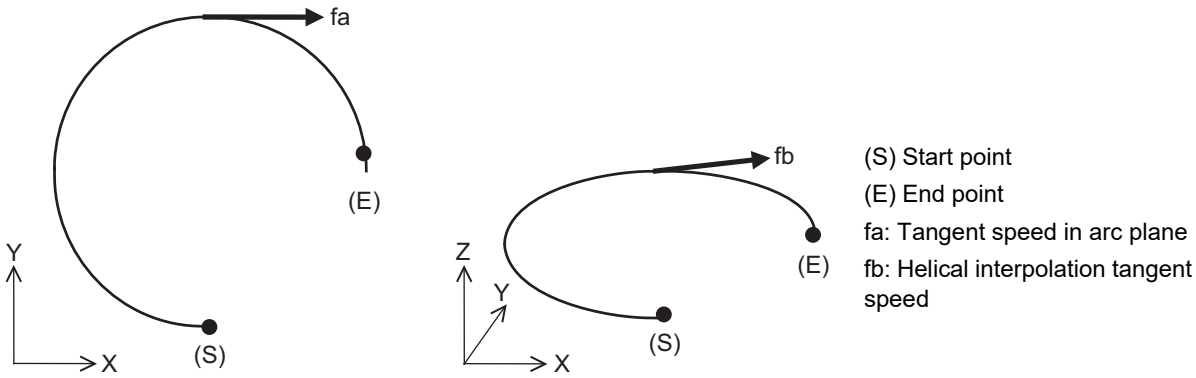


Command the feedrate F as the resultant speed for each axis.

### Speed designation by the arc plane component

If speed designation by the arc plane component is selected, the F command will be handled as modal data in the same manner as the normal F command. This will also apply to the following G01, G02 and G03 commands.
For example, the program will be as follows. (The X axis is a diameter axis.)

| | |
|---|---|
| G17 G02 U20. V10. W-4. I10. F100 ; | Helical interpolation is performed with such speed that arc plane component is F100. |
| G01 U40. ; | Linear interpolation is performed at the speed of F100. |
| G02 U20. V-10. W4. J-10. ; | Helical interpolation is performed with such speed that arc plane component is F100. |
| G01 V-40. F120 ; | Linear interpolation is performed at the speed of F120. |
| G02 U-20. V-10. Z-4. I-10. ; | Helical interpolation is performed with such speed that arc plane component is F120. |
| G01 U-40. ; | Linear interpolation is performed at the speed of F120. |

When the speed designation by the arc plane component is selected, only the helical interpolation speed command is converted to the speed commanded with the arc plane component and operates. The other linear and arc commands operate as normal speed commands.

(1) The actual feedrate display (Fc) indicates the tangent component of the helical interpolation.
(2) The modal value speed display (FA) indicates the command speed.
(3) The speed data acquired with API functions follows the Fc and FA display.
(4) This function is valid only when feed per minute (asynchronous feed: G94) is selected. If feed per revolution (synchronous feed: G95) is selected, the arc plane component speed will not be designated.

## Number of pitches

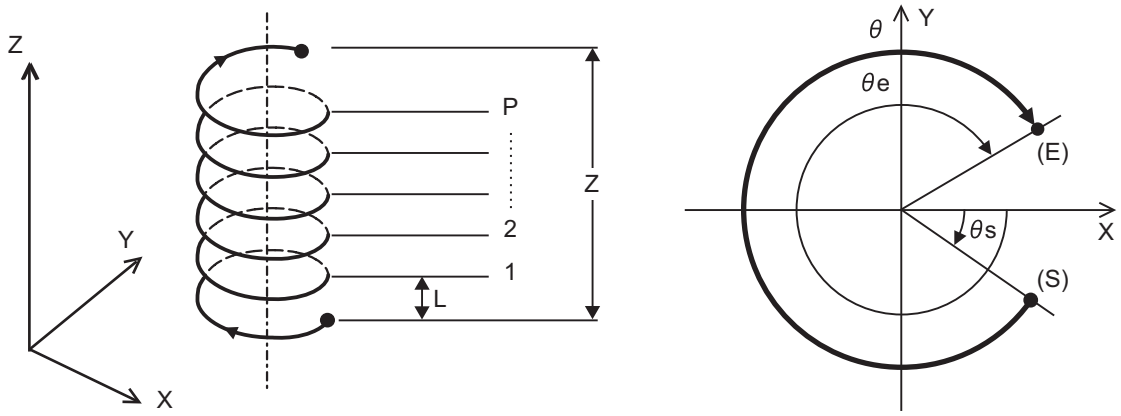


(S) Start point (E) End point

(1) Pitch "L" is obtained with the following expression.

$$L = \frac{Z}{P + \theta / 2\pi}$$

$$\theta = \theta e - \theta s = \tan^{-1}\frac{ye}{xe} - \tan^{-1}\frac{ys}{xs} \quad (0 \leq \theta < 2\pi)$$

xs, ys: Distance from the arc center to the start point (each of X and Y axes)

xe, ye: Distance from the arc center to the end point (each of X and Y axes)

(2) When address P is omitted, the number of pitches is set to "0". However, when the start point is equal to the end point, the number of pitches is set to "1".

<Note>

- The pitch No. "P" command range is 0 to 9999.
  The pitch No. designation ("P" command) cannot be made with the R-specified arc.

## Plane selection

The helical interpolation arc plane selection is determined with the plane selection mode and axis address in the same manner as the circular interpolation. For the helical interpolation command, the plane where circular interpolation is executed is required to be commanded with the plane selection G code (G17, G18, G19), and two circular interpolation axes and three linear interpolation axes (axes which perpendicular to the arc plane) are required to be commanded.

X-Y plane circular, Z axis linear

Command the X, Y and Z axis addresses in the G02 (G03) and G17 (plane selection G code) mode.

Z-X plane circular, Y axis linear

Command the Z, X and Y axis addresses in the G02 (G03) and G18 (plane selection G code) mode.

Y-Z plane circular, X axis linear

Command the Y, Z and X axis addresses in the G02 (G03) and G19 (plane selection G code) mode.

The plane for an additional axis can be selected as with circular interpolation.

## Relationship with other functions

### Geometric IB

This function can be used together with the Geometric IB function. For details about Geometric IB, refer to "15.5 Geometric IB".

The arc of the second block of geometric IB can now be operated helically by commanding the pitch and height in the second block (N2 block) as follows.

(1) When using I, J, and K in a similar way to geometric IB

```
N1 G02(G03) Ii1 Jj1 Ff1;
N2 G02(G03) Xx2 Yy2 Ii2 Jj2 Zz2 Pp2 ( ,Pp2 ) Ff2;
```

<Note>

- When "P" and ",P" addresses are commanded simultaneously, the ",P" address command takes precedence.

(2) When using P, A, and Q (X, Y and Z axes of the arc center coordinates (absolute position)) instead of I, J, K

```
N1 G02(G03) Ii1 Jj1 Ff1;
N2 G02(G03) Xx2 Yy2 Pp2 Aa2 Zz2 ,Pp2 Ff2;
```

## Precautions and restrictions

(1) When executing helical interpolation, issue the circular interpolation command and another linear axis command (several axes can be commanded) that does not contain the arc axis.

(2) The number of axes that can be commanded simultaneously is less than or equal to the number of simultaneous contouring control axes.

(3) With helical interpolation, the axes that configure the plane are the circular interpolation axes, and the other axis is the linear interpolation axis.

(4) The movement of the linear interpolation axis is stopped and only the circular interpolation axes operate during the corner chamfering or corner rounding commands.

(5) Refer to description of "6.3 Circular Interpolation; G02, G03" and "15.5 Geometric IB" for other precautions.

# 6.8 Milling Interpolation; G12.1

## Function and purpose

Milling interpolation is used to perform contouring control by converting commands programmed in an orthogonal coordinate system into movements of a linear axis and rotary axis (workpiece rotation). (In the figure below, "(Y)" is a hypothetical axis.)

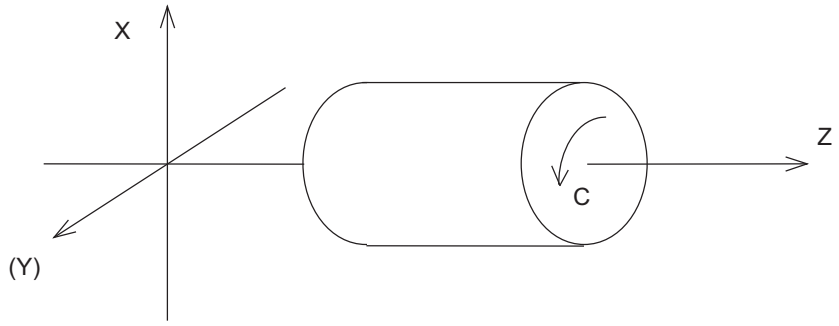


G12.1 command starts a milling and G13.1 command cancels the milling to return to a normal turning.

## Command format

### Milling mode ON

```
G12.1 D__ E=__ ;
```

| | |
|---|---|
| D | Selection of milling hypothetical axis name |
| E= | Designation of rotary axis for milling interpolation |

### Milling mode OFF (Turning mode)

```
G13.1 ;
```

| Address | Meaning of address | Command range (unit) | Remarks |
|---|---|---|---|
| D | Selection of milling hypothetical axis name | 0: Y axis<br>1: Rotary axis name | ♦ If there is no D command, the milling hypothetical axis name will follow parameter (#1517 mill_C).<br>♦ If only the D command is issued, it will be handled as D0.<br>♦ A program error (P35) will occur if a value other than 0 or 1 is set to the numerical command following the D command. |

| Address | Meaning of address | Command range (unit) | Remarks |
|---|---|---|---|
| E= | Designation of rotary axis for milling interpolation | G12.1 command part system rotation axis command address | ♦If there is no E command, the parameter (#1516 mill_ax) will be followed.<br>♦A program error (P33) will occur if only an E command is issued.<br>♦A program error (P33) will occur if an axis address is not commanded after "E=".<br>♦A program error (P482) will occur if an axis that does not exist in the command part system is designated as the rotary axis name.<br>♦A program error (P32) will occur if a value is commanded for the rotary axis name.<br>♦To issue a program command after the "E= rotary axis name", delimit the "E= rotary axis name" and the other command with a comma (,). A program error (P33) will occur if there is no comma. |

The following G codes are used to select milling and to set the conditions.

| G code | Function | Remarks |
|---|---|---|
| G12.1<br>G13.1 | Milling mode ON<br>Milling mode OFF | Default is G13.1 |
| G16<br>G17<br>G19 | Y-Z cylindrical plane selection<br>X-Y plane selection<br>Y-Z plane selection | G17, G16, or G19 can be designated as the default value (when G12.1 is issued) according to the following parameter setting.<br>#8113 Milling initial G16<br>#8114 Milling initial G19 |
| G41<br>G42 | Tool radius compensation left<br>Tool radius compensation right | Default is G40 (radius compensation cancel). |

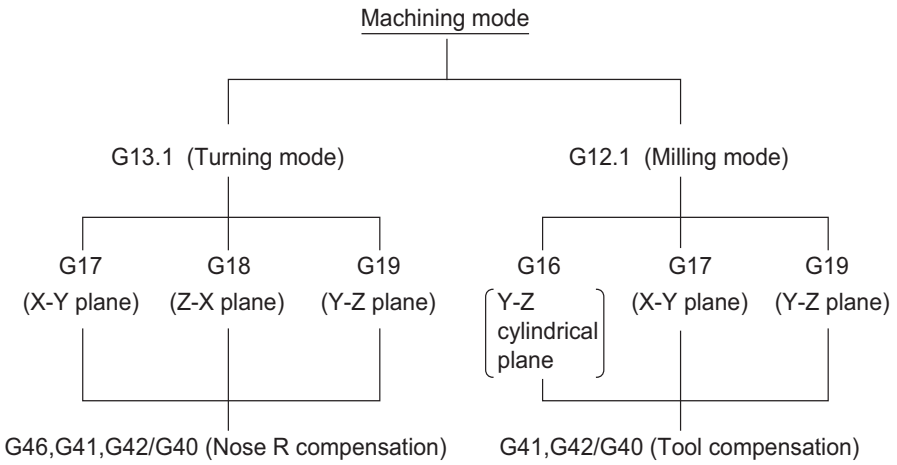

## 6.8.1 Selecting Milling Mode

### Detailed description

(1) The G12.1 and G13.1 commands are used to switch between the turning (G13.1) and milling (G12.1) modes.

(2) These commands are modal and the initial mode effective at power ON is the turning mode.

(3) The following requirements must be satisfied before a G12.1 command is issued. Otherwise, a program error (P485) will occur.

(a) Nose R compensation has been canceled.

(b) Constant surface speed control has been canceled.

(4) If one of the command axes in the milling mode has not completed reference position return, a program error (P484) will occur.

### Precautions

(1) If G12.1 is executed with no movement command issued after nose R compensation has been canceled by G40 (commanded alone in a block), the subsequent operations are performed based on the axis of the G12.1 block, which is used as the position to be set after nose R compensation has been canceled.

(2) If the milling interpolation command is issued during the mirror image, a program error (P486) will occur.

(3) When the G12.1 command is issued, the deceleration check is executed.

(4) If a command other than a plane selection is issued in the same block as G12.1 command, a program error (P33) will occur.

## 6.8.2 Milling Interpolation Control and Command Axes

**Detailed description**

(1) The two orthogonal linear axes (X and Z axis) and a rotary axis are used as control axes for milling interpolation. The rotation axis is selected with the E command. The axis designated with the parameter (#1516 mill_ax) will be selected if there is no E command. (This depends on the MTB specifications.)

(2) The command axes for milling interpolation are three orthogonal linear axes. The names of axes should be X, Z, and a hypothetical axis.
A hypothetical axis is a virtual axis for interpolation command which intersects the X and Z axes at right angles. The hypothetical axis name will be either of the control rotation axis names which are selected in Y or (1) by a D command. The axis name designated with the parameter (#1517 mill_C) will be selected if there is no D command. (In the figure below, "(Y)" is a hypothetical axis.)

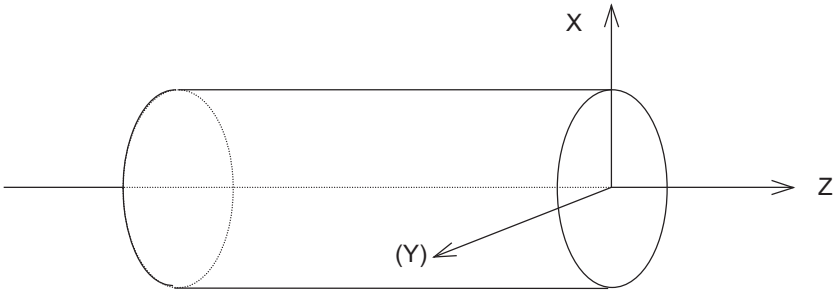


(3) Command axis X for milling is not just the interpolated one of control axis X. It is handled as X in the milling coordinate system when a G12.1 command is issued.

(4) Whether the position in the milling coordinate system is handled by a diameter command or radius command is selected by the following parameter.

| Parameter | Details |
|---|---|
| #8111 Milling Radius | 0 : Radius command for all axes |
| | 1 : Follows parameter (#1019 dia) for each axis. |

(Example 1) When C axis is used for rotation axis, and "Y" for hypothetical axis name

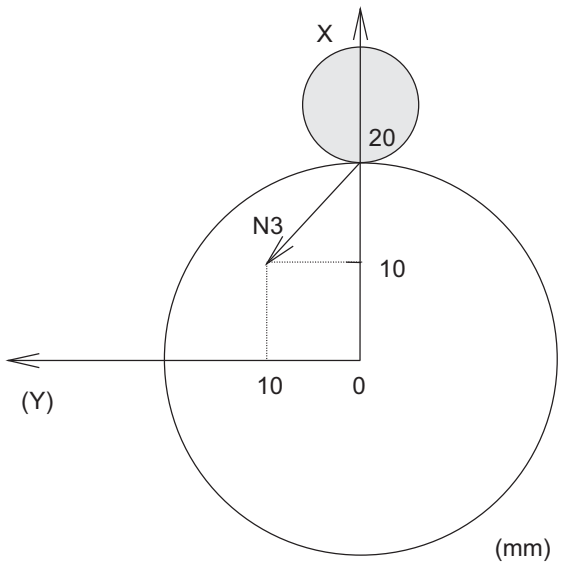


```
(Program 1)
   :
   :
   :
N1 G00 X40. ;
N2 G12.1;
(or G12.1 E=C, D0 ; )
N3 G01 X10. Y10. F10. ;
   :
   :
   :
```

N3 of program 1 is executed as follows:

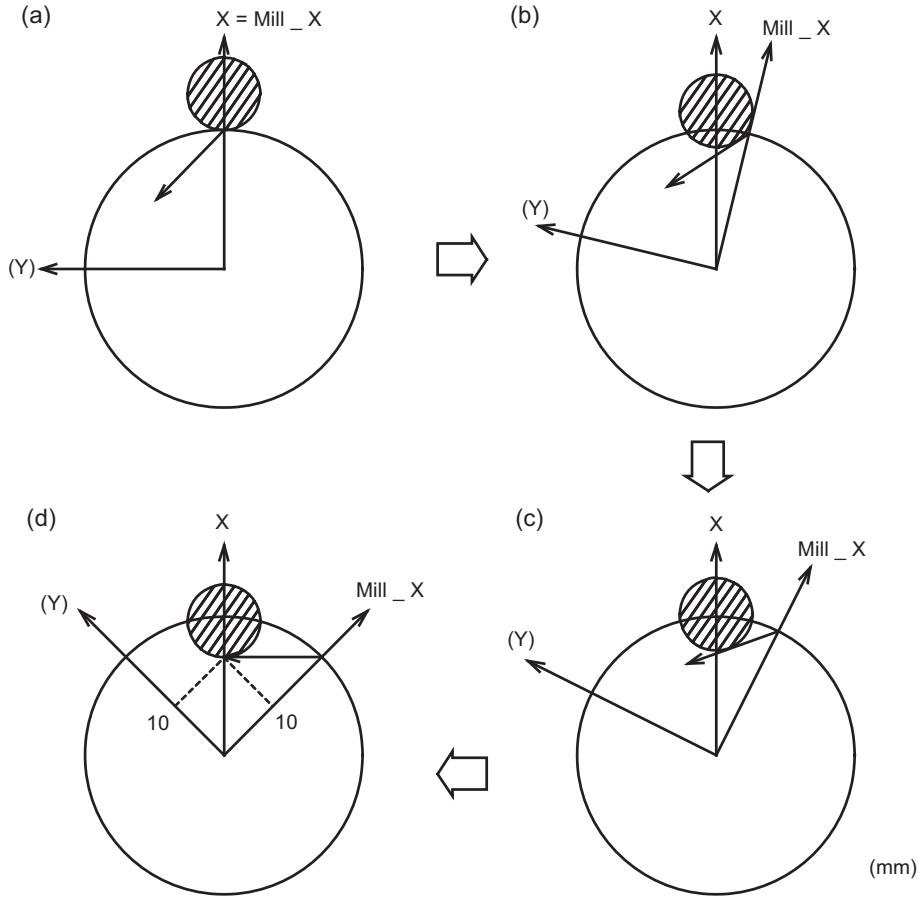


Current values of (d)

X 28.284 (diameter value display)

C 45.000 (Except tool radius compensation amount)

(5) Milling interpolation is also available for a two-control-axis system consisting of one linear axis and one rotation axis. The X axis must be used as the linear axis. The rotation and milling hypothetical axes are selected as shown above. In milling mode, the G17 plane must be selected.

(6) The table below lists the incremental axis names of the hypothetical axis used in milling mode. These axis commands are radius commands only.

| Selected hypothetical axis | Absolute axis name | Incremental axis name |
|---|---|---|
| Y axis | Y | V |
| Rotation axis (C) | #1013 axname set axis name (C) | #1014 incax set axis name (H) |

(The following description uses Y for the hypothetical axis name and C for the rotation axis name.)

## 6.8.3 Selecting a Plane during the Milling Mode ; G17,G19,G16

### Function and purpose

A plane selection command decides the plane on which a tool moves by circular interpolation or tool radius compensation in milling mode.

### Command format

**G17; ... X-Y plane**

**G19; ... Y-Z plane**

**G16 C; ... Y-Z cylindrical plane**

| | |
|---|---|
| C | Cylinder radius value |

### Detailed description

These G commands for plane selection are modal. A plane is automatically selected according to parameters each time the turning mode is switched to the milling mode by a G12.1 command.

| Plane selection default value | G17 | G19 | G16 | |
|---|---|---|---|---|
| #8113 Milling initial G16 | 0 | 0 | 1 | 1 |
| #8114 Milling initial G19 | 0 | 1 | 0 | 1 |

When the milling mode is switched back to the turning mode by a G13.1 command, the plane, that was selected before the milling mode is entered, is restored.

## Planes to be selected

The three planes to be selected are explained below.

(1) G16 Y-Z cylindrical plane

G16 indicates the plane obtained by developing a cylinder with its bottom radius X. This is useful to process the side face of a workpiece.

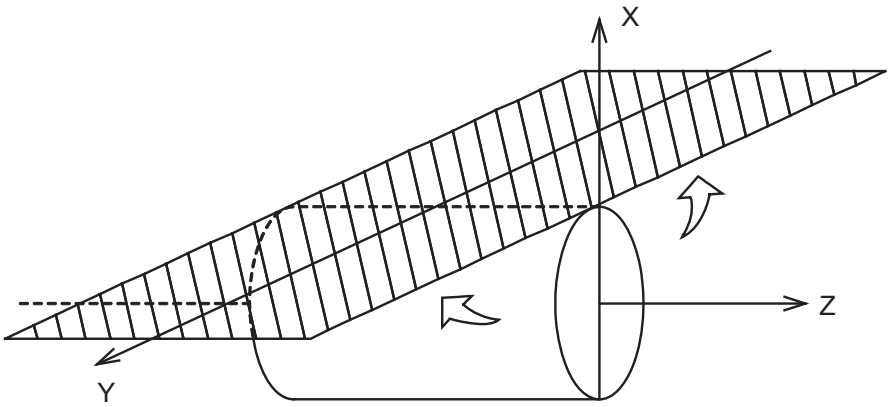


(2) G17 (X-Y) plane

X-Y plane in an XYZ orthogonal coordinate system. This is useful to process the end face of a workpiece.

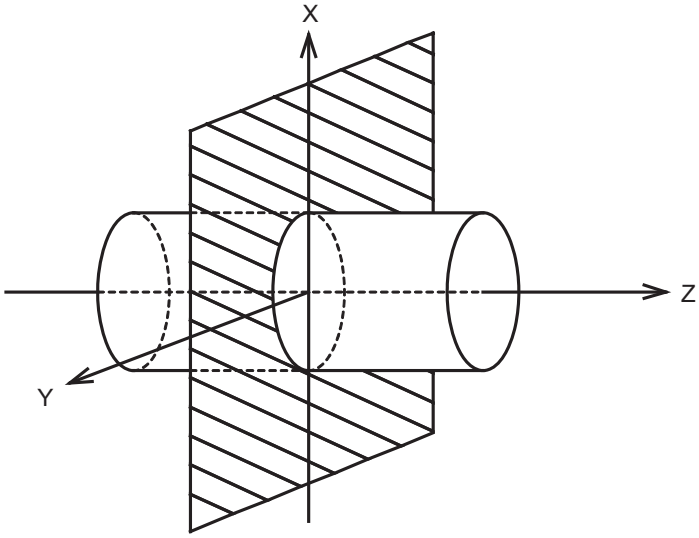


(3) G19 Y-Z plane

Y-Z plane in an XYZ orthogonal coordinate system.

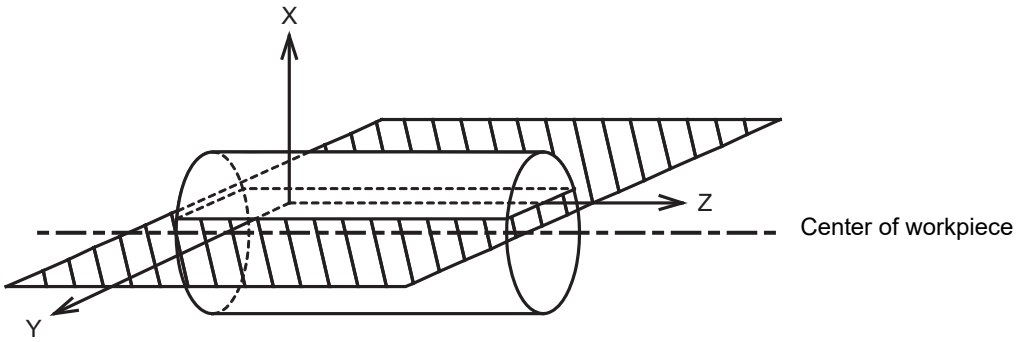

## 6.8.4 Setting Milling Coordinate System

### Function and purpose

The coordinate system in a milling mode is set depending on a plane which is selected each time the turning mode (G13.1) is switched to the milling mode by a G12.1 command.

### Detailed description

**G16 plane**

(1) To select a G16 plane, specify the radius value of a cylinder by "G16 C__ ;". If no radius value is specified, the current X axis value at the time of G16 command is used as the radius value to define a cylinder. If no radius value can be defined, a program error (P485) will occur.

(2) As in normal turning mode, the X axis indicates the distance from the center line of the workpiece.

(3) G16 (Y-Z cylindrical plane) is actually the side of a cylinder.

(4) The X axis indicates the distance from the center line of the workpiece. The Y axis indicates the circumference with the radius value of the bottom of the cylinder which is defined by a G16 command.

(5) The zero point of the Y axis is the position where a G12.1 command is issued.

(Example)

```
:                   :                   :                   :
:                   :                   :                   :
G12.1 G16 C50. ;    or    G12.1 ;       or    G12.1 Ee,Dd   or    G12.1 Ee,Dd;
                          G16 C50 ;           G16 C50 ;           G16 C50 ;
:                   :                   :                   :
:                   :                   :                   :
```

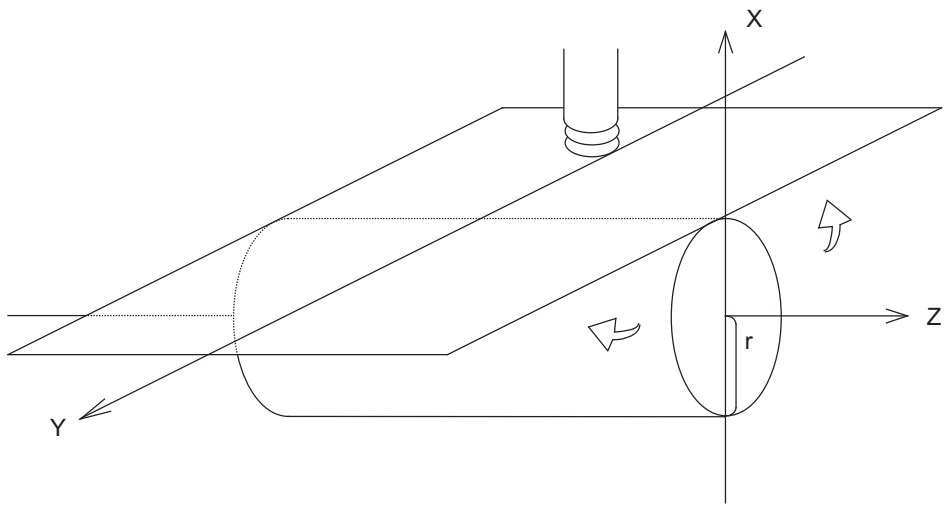

### G17 and G19 planes

(1) For the X and Z axes, the current positions are set as radius value in the coordinate value.

(2) The Y axis is fixed as an axis which intersects the X and Z axes at right angles. Y=0 is set in a G12.1 command.

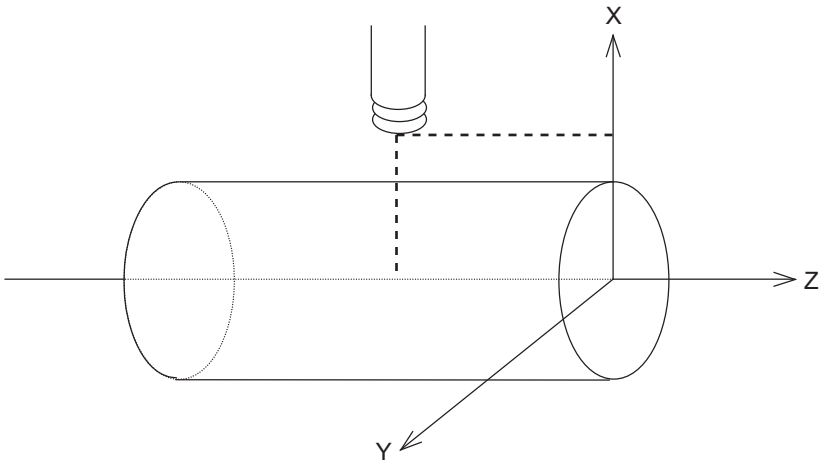


**Note**

- In the milling mode on the G17 plane, the X axis is operated in the area (positive or negative side) that existed before issuing the G12.1 command. To control the X axis in the positive side in the milling mode, move the X axis to the positive area (including 0) before issuing the G12.1 command. To control the X axis in the negative side in the milling mode, move the X axis to the negative area (not including 0) before issuing the G12.1 command.

## 6.8.5 Preparatory Function

**Detailed description**

**Valid G codes in milling mode**

| Classification | G code | Function | Classification | G code | Function |
|---|---|---|---|---|---|
| * | G00 | Positioning | | G65 | Macro call |
| * | G01 | Linear interpolation | | G66 | Macro modal call A |
| * | G02 | Circular interpolation (CW) | | G66.1 | Macro modal call B |
| * | G03 | Circular interpolation (CCW) | | G67 | Macro modal call Cancel |
| | G04 | Dwell | | | |
| | G09 | Exact stop check | | G80 | Hole drilling cycle cancel |
| | | | | G83 | Deep hole drilling cycle (Z axis) |
| | G13.1 | Turning mode | | G84 | Tap cycle (Z axis) |
| | | | | G85 | Boring cycle (Z axis) |
| | | | | G87 | Deep hole drilling cycle (X axis) |
| ○ | G16 | Plane selection Y-Z cylindrical plane | | G88 | Tap cycle (X axis) |
| | G17 | Plane selection X-Y | | G89 | Boring cycle (X axis) |
| | | | | G90 | Absolute command |
| | G19 | Plane selection Y-Z | | G91 | Incremental command |
| | | | | | |
| | G22 | Barrier check ON | | G94 | Asynchronous feed |
| | G23 | Barrier check OFF | | G95 | Synchronous feed (*1) |
| | | | | G98 | Cycle initial point return |
| | | | | G99 | Hole drilling cycle R point return |
| | | | | | |
| | | | | G61 | Exact stop mode |
| | G40 | Tool radius compensation cancel | | | |
| | G41 | Tool radius compensation left | | G64 | Cutting mode |
| | G42 | Tool radius compensation right | | | |

*: Milling interpolation command

○: G code effective only in milling mode

(*1) The validity of G95 (synchronous feed) depends on the MTB specifications (parameter "#1293 ext29/bit0").

(1) If an invalid G code is issued in milling mode, a program error (P481) will occur.
If the milling interpolation ON (G12.1) is issued in milling mode, a program error (P481) will occur.

(2) In milling mode, all movement commands are issued by the coordinate system which is already determined by the selected machining plane. The rotation axis thus cannot be moved by a direct command in milling mode. To perform milling to a workpiece at a specific position, therefore, positioning must be done before a milling mode command.

(Example)

```
:
G00  X100.  C180. ;
G12.1  ;
G00  X50. ;
        :
```

=> Positioning before milling
(Otherwise, "G12.1 E=C,D0 ;" is also possible.)

(3) If an axis other than X, Z, and Y (rotation axis) is specified in milling mode, a program error (P481) will occur.

(4) In milling mode, the Y axis can be specified by only four G codes: G00, G01, G02, and G03. These are called the milling interpolation commands.

### Positioning (G00)

If a G00 command is issued in milling mode, positioning is made to the specified point on the selected plane at a rapid traverse rate.

```
G00  X/U__  Y/V__  Z/W__  ;
```

### Linear interpolation (G01)

If a G01 command is issued in milling mode, linear interpolation is made to the specified point on the selected plane at the speed specified by an F command modal speed.

(1) G16 mode (plane selection Y-Z cylindrical plane)

Program Format

```
G01  Y/V__  Z/W__  X/U__  F__  ;
```

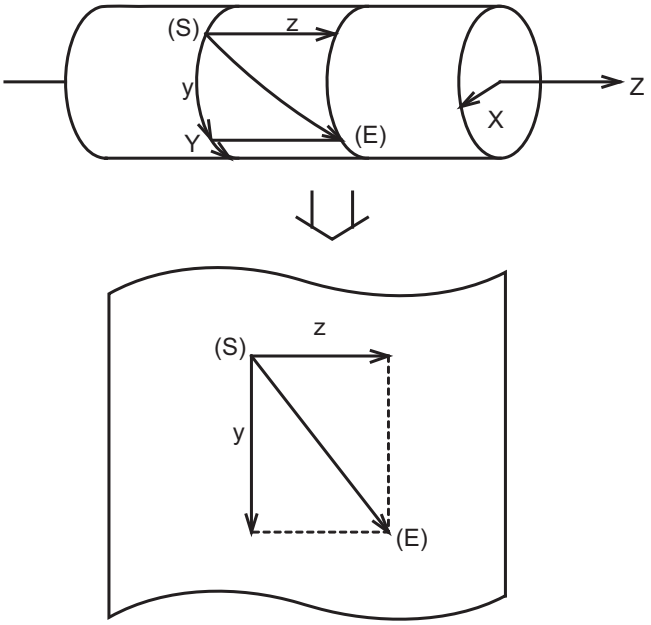


(S) Start point (E) End point

(2) G17 mode (plane selection X-Y)

Program Format

```
G01  X/U__  Y/V__  Z/W__  F__  ;
```

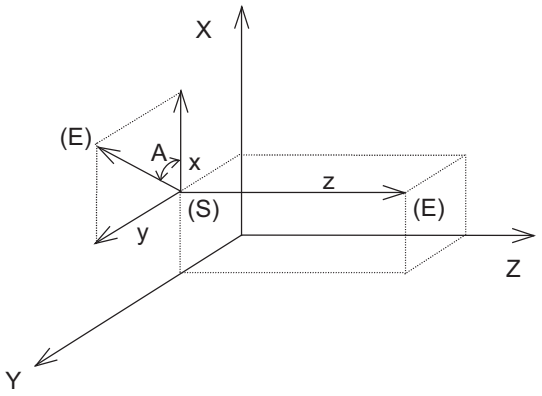


(S) Start point (E) End point

(3) G19 mode (plane selection Y-Z)

Program Format

```
G01  Y/V__  Z/W__  X/U__  F__  ;
```

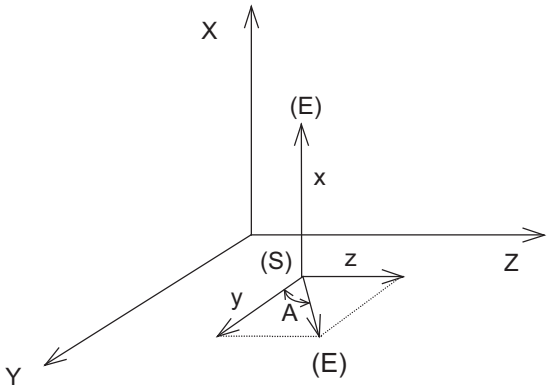


(S) Start point (E) End point

## Circular interpolation (G02/G03)

If a G02 or G03 command is issued in milling mode, circular interpolation is performed at the specified speed on the selected plane.

(1) G16 mode

| **G02/G03 Y/V__ Z/W__ J__ K__ F__ ;**<br>**or**<br>**G02/G03 Y/V__ Z/W__ R__ F__ ;** | |
|---|---|
| G02 | Circular interpolation (clockwise) |
| G03 | Circular interpolation (counterclockwise) |
| Y/V | Circular end point coordinate, Y axis (Y: absolute position, V: incremental position) |
| Z/W | Circular end point coordinate, Z axis (Z: absolute position, W: incremental position) |
| J/K | Circular center incremental position (radius command incremental position from the start point to the center) |
| R | Circular radius |
| F | Feedrate |

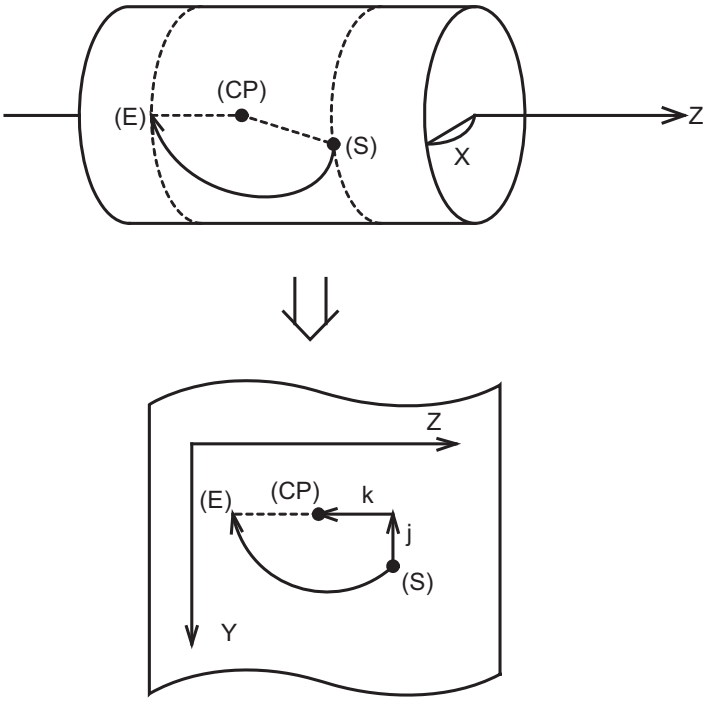


(S) Start point (E) End point (CP) Center of circular

(2) G17 mode

| **G02/G03 X/U__ Y/V__ I__ J__ F__ ;**<br>**or**<br>**G02/G03 X/U__ Y/V__ R__ F__ ;** | |
|---|---|
| X/U | Circular end point coordinate, X axis (X: absolute position, U: incremental position) |
| Y/V | Circular end point coordinate, Y axis (Y: absolute position, V: incremental position) |
| I/J | Circular center incremental position (incremental position from the start point to the center) |
| R | Circular radius |
| F | Feedrate |

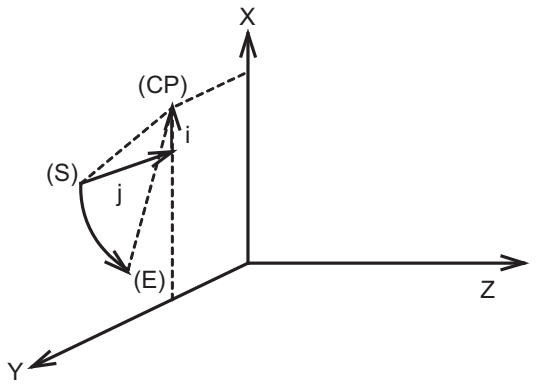


(S) Start point (E) End point (CP) Center of circular

(3) G19 mode

| **G02/G03 Y/V__ Z/W__ J__ K__ F__ ;**<br>**or**<br>**G02/G03 Y/V__ Z/W__ R__ F__ ;** | |
|---|---|
| Y/V | Circular end point coordinate, Y axis (Y: absolute position, V: incremental position) |
| Z/W | Circular end point coordinate, Z axis (Z: absolute position, W: incremental position) |
| J/K | Circular center incremental position (incremental position from the start point to the center) |
| R | Circular radius |
| F | Feedrate |

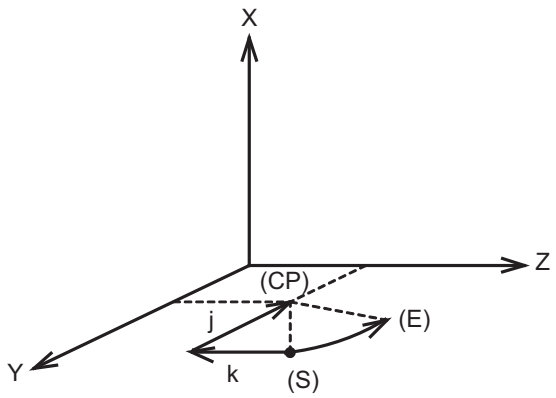


(S) Start point (E) End point (CP) Center of circular

## 6.8.6 Switching from Milling Mode to Turning Mode; G13.1

### Detailed description

(1) A G13.1 command is used to cancel the milling mode and return to the turning mode.

(2) The G13.1 command is effective if the following requirement is met. If not, a program error (P485) will occur.

(a) Tool radius compensation has been canceled.

(3) The G13.1 command restores the plane selected before the G12.1 command was issued.

(4) The G13.1 command restores the synchronous/asynchronous mode and the asynchronous F value which was selected before G12.1 command was issued.

### Precautions

(1) If G13.1 is executed with no movement command issued after nose R compensation is canceled by G40 (commanded alone in a block), nose R compensation is canceled in the G13.1 block.

(2) When the G13.1 command is issued, the deceleration check is executed.

(3) If a command other than the plane selection command is issued during the G13.1 command, a program error (P33) will occur.

## 6.8.7 Feed Functions

### Detailed description

The synchronous/asynchronous feed mode in the milling mode is the same as for the normal turning mode.
To issue the F command in the milling mode, command the speed in the milling coordinate system selected by G16, G17, or G19.
Whether to enable or disable the synchronous feed in the milling mode depends on the MTB specifications (parameter "#1293 ext29/bit0").

(1) When the synchronous feed is disabled:
Only the asynchronous feed is valid during the milling mode.
If the synchronous feed command (G95) is issued during the milling mode, a program error (P481) will occur.
When the milling mode is started by G12.1, the asynchronous mode is forcibly set, and the F command modal value is canceled. After the mode has been switched, specify the feedrate using the F command.
The operation to be performed when the milling mode is canceled varies depending on the feed mode that is specified before the milling mode is started.

| | |
|---|---|
| Case where the asynchronous feed is specified before the milling mode is started | The F command modal value and feed mode remain unchanged and take over the previous state when the G13.1 milling mode is canceled. |
| Case where the synchronous feed is specified before the milling mode is started | When the milling mode is canceled by a G13.1 command, both the feed mode and the F command modal value return to the state before the G12.1 command is issued. |

(2) When the synchronous feed is enabled:
Both the synchronous feed and asynchronous feed are valid during the milling mode.
The F command modal value and feed mode remain unchanged and take over the previous state when the milling mode is started by G12.1 or canceled by G13.1.

| Parameter #1293/bit0 | Before G12.1 starts | At execution of G12.1 | | At execution of G13.1 | |
|---|---|---|---|---|---|
| | | Feed mode | F command modal value | Feed mode | F command modal value |
| 0 (Invalid) | Asynchronous | Asynchronous | 0 (The modal value is canceled.) | Asynchronous | Modal value just before being canceled |
| | Synchronous | | | Synchronous | Modal value just before being started |
| 1 (Valid) | Asynchronous | Asynchronous | F modal value just before being started | Feed mode just before the mode is canceled | Modal value just before being canceled |
| | Synchronous | Synchronous | | | |

## 6.8.8 Tool Length Compensation

**Detailed description**

(1) In milling mode, tool compensation is performed by adding the specified tool length offset amount to the cutting coordinates converted from the milling coordinate system.

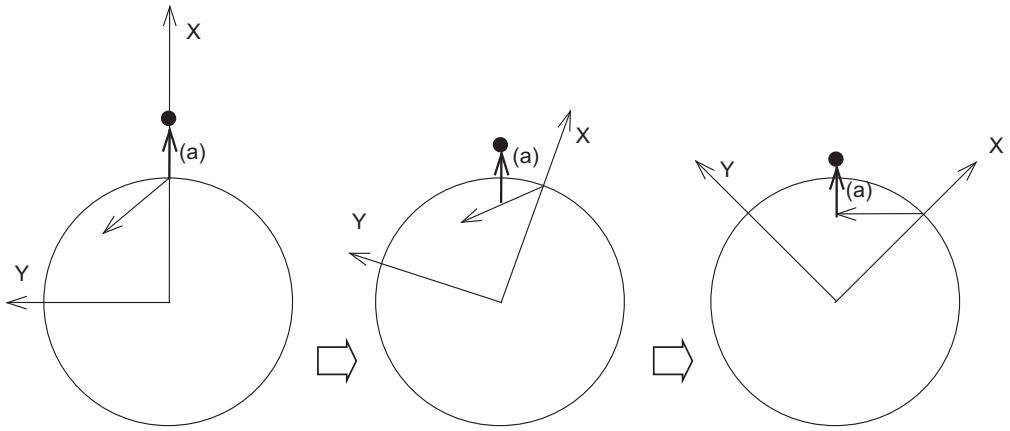


● Tool position (a) Tool length offset

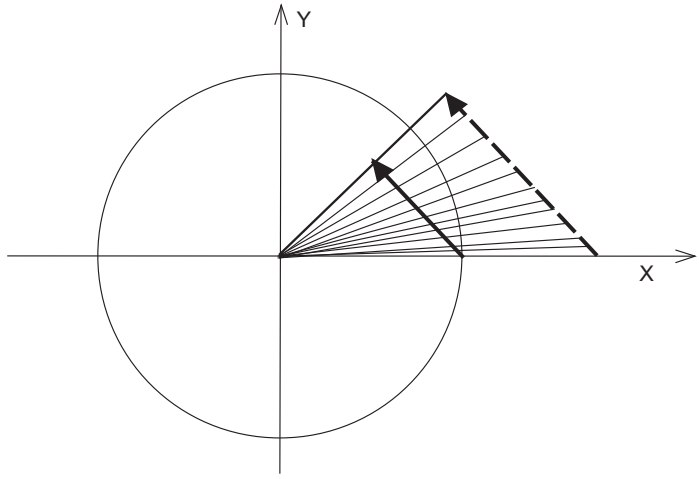


Movement on the milling coordinate system

Milling coordinate system Actual tool position

(2) As can be seen from (1) in previous page, if the specified compensation amount is different from the actual tool length, desired shape will not be obtained.

| (a) If the compensation amount is larger than tool length Example: The actual tool length is 15.0 when tool length X = 20.0 | (b) If the compensation amount is smaller than tool length Example: The actual tool length is 25.0 when tool length X = 20.0 |
|---|---|
| 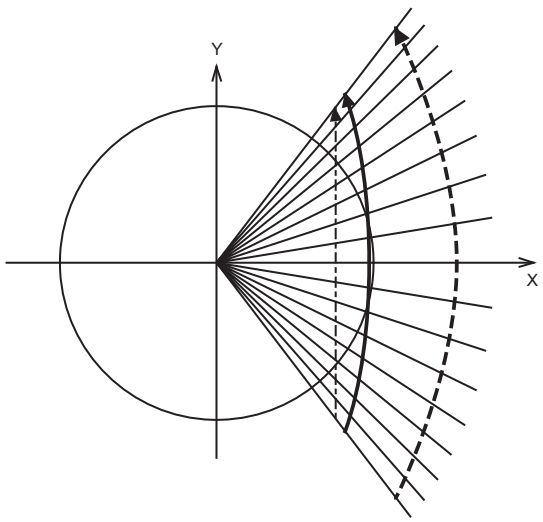  | 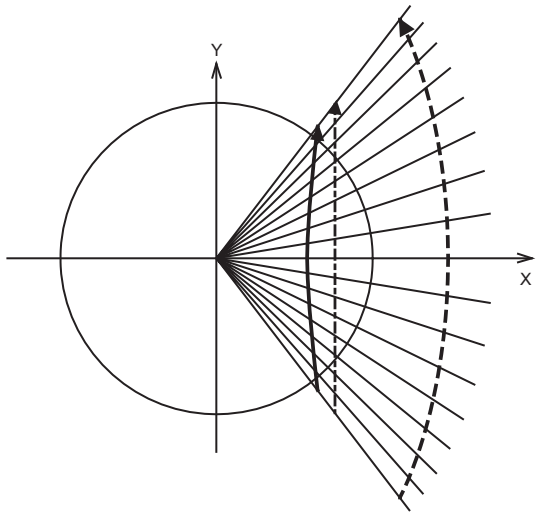  |

Milling command

Movement on the milling coordinate system

Milling coordinate system Actual tool position

## 6.8.9 Tool Radius Compensation

### Function and purpose

The workpiece shape can be compensated in the direction of the vector by the radius amount of the tool specified by a G command (G40 to G42) and selected compensation No.

### Command format

**Tool radius compensation cancel**

```
G40 X__ Y__ ;
```

**Tool radius compensation (left)**

```
G41 X__ Y__ ;
```

**Tool radius compensation (right)**

```
G42 X__ Y__ ;
```

(1) A tool radius compensation command must be issued after entering a milling mode.
The tool radius compensation command must be canceled before entering a turning mode.

(2) A tool compensation No. must be specified before entering a milling mode (before issuing a G12.1 command).
In a milling mode, a T command causes a program error (P485).

(3) Tool radius compensation is performed on the selected plane.

| | |
|---|---|
| G17 plane | XY axes |
| G19 plane | YZ axes |
| G16 plane | |

## 6.8.9.1 Tool Radius Compensation Operation

### Detailed description

#### Tool radius compensation cancel mode

The tool radius compensation cancel mode is established by any of the following conditions.

(1) While a G12.1 command is effective

(2) After the compensation cancel command (G40) is issued

In the compensation cancel mode, the compensation vector is 0 and the tool center path matches the programmed path.
Programs including tool radius compensation must be terminated in the compensation cancel mode.

#### Tool radius compensation start (startup)

Tool radius compensation starts when all the following conditions are met in the compensation cancel mode.

(1) A G41 or G42 command is issued.

(2) The tool radius compensation No. is greater than 0 and equal to or less than the maximum compensation No.

(3) The movement command is not a circular command.

Whether in continuous or single block operation, compensation always starts after reading three blocks, or if the three blocks do not contain any movement command, up to five continuous blocks will be pre-read.
In compensation mode, too, up to 5 blocks are pre-read and the compensation is arithmetically processed.

**[Control state diagram]**

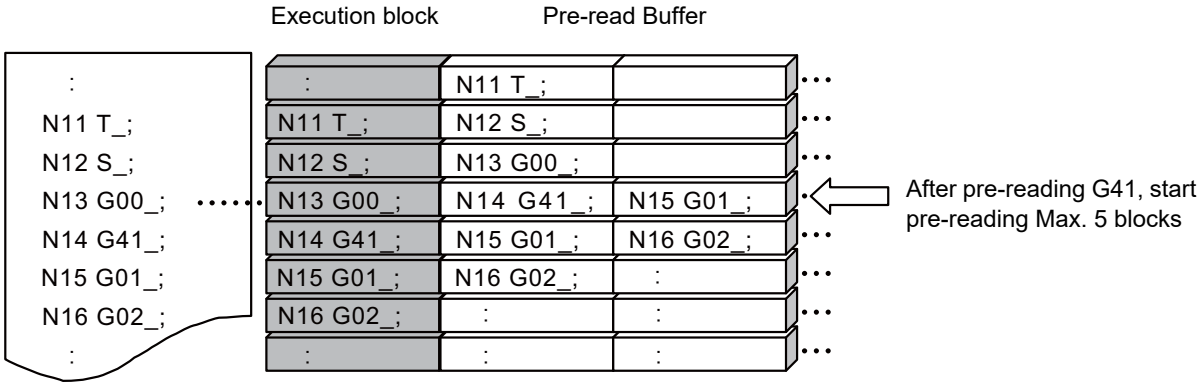


There are two ways of starting the compensation operation: type A and type B.
Choose the type by the parameter "#8157 tool nose compensation type B".
This type is used in common with the compensation cancel type.

| #8157 Nose R comp type B | Type | Description |
|---|---|---|
| 0 | Type A | When starting up/canceling a command block with nose R compensation and radius compensation, type A will not conduct intersection operation processing to the block and, instead, convert it to an offset vector which is vertical to the command vector. |
| 1 | Type B | When starting up/canceling a command block with nose R compensation and radius compensation, Type B will conduct intersection operation processing to the command block and the next block. |

## Start operation for tool radius compensation

(1) Machining an inside corner

| Linear -> Linear | Linear -> Circular |
|---|---|
| 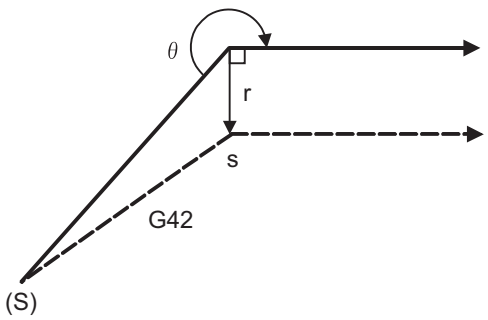  | 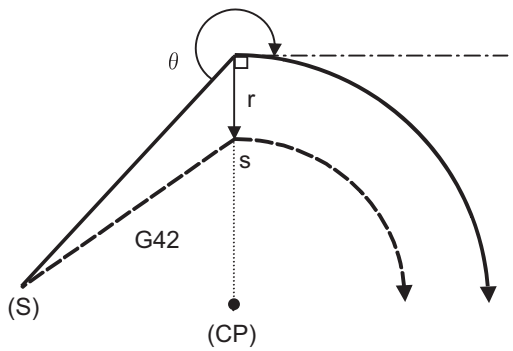  |

(S) Start point
r : Compensation amount
(CP) Center of circular
s: Stop point with single block

(2) Machining an outside corner (obtuse angle) [90° <= θ < 180°]

| Linear -> Linear (Type A) | Linear -> Circular (Type A) |
|---|---|
| 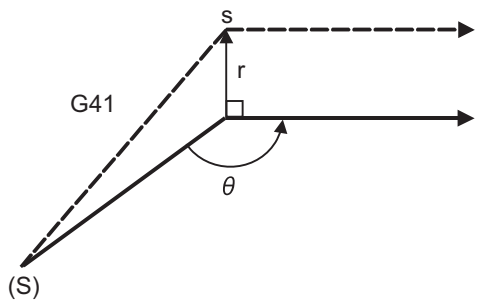  | 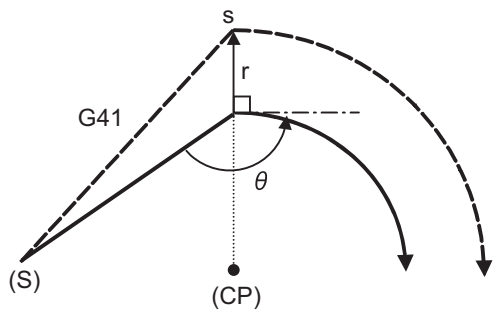  |
| **Linear -> Linear (Type B)** | **Linear -> Circular (Type B)** |
| 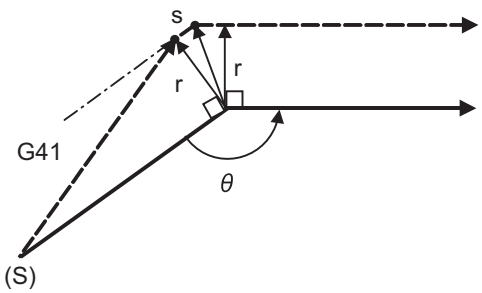  | 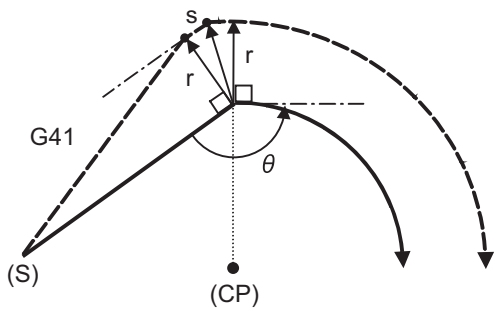  |

(S) Start point
r : Compensation amount
(CP) Center of circular
s: Stop point with single block

Program path

Tool center path

(3) Machining an outside corner (acute angle) [θ < 90°]

| Linear -> Linear (Type A) | Linear -> Circular (Type A) |
|---|---|
| 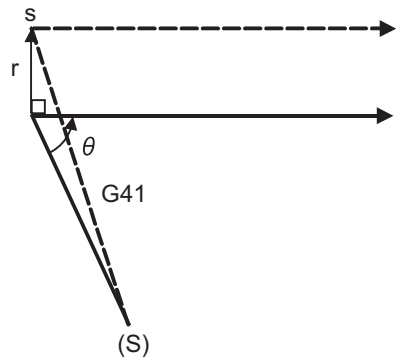  | 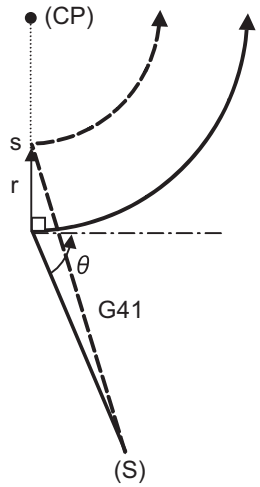  |
| **Linear -> Linear (Type B)** | **Linear -> Circular (Type B)** |
| 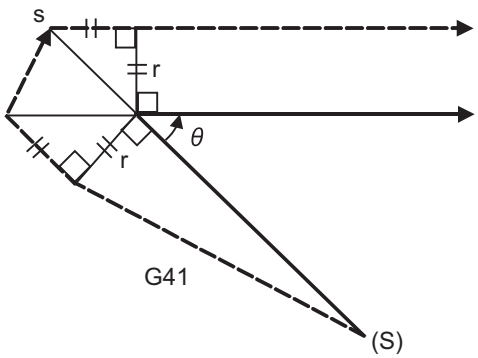  | 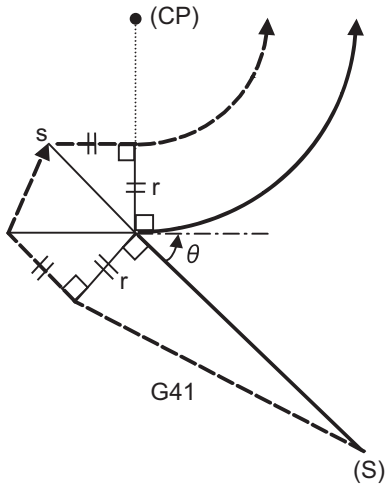  |

(S) Start point
(CP) Center of circular
r : Compensation amount
s: Stop point with single block

Program path

Tool center path

<Note>

- If there is no axis movement command in the same block as G41 or G42, compensation is performed perpendicularly to the next block's direction.

## Operation in compensation mode

Calculate the tool center path from the linear line/circular arc to perform compensation to the program path (G00, G01, G02, G03).
Even if the same compensation command (G41, G42) is issued in the compensation mode, the command will be ignored.
When 4 or more blocks without a movement command are continuously commanded in the compensation mode, overcutting or undercutting will occur.

(1) Machining an outside corner

| Linear -> Linear (90°<= θ < 180°) | Linear -> Linear (0° < θ < 90°) |
|---|---|
| 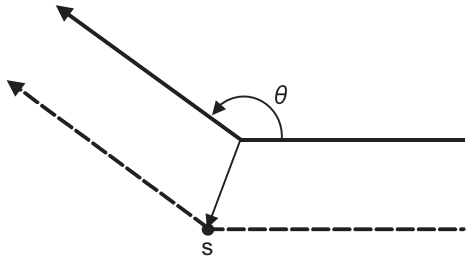 | 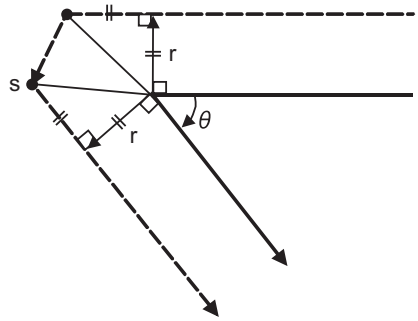 |
| **Linear -> Circular (90° <= θ < 180°)** | **Linear -> Circular (0° < θ < 90°)** |
| 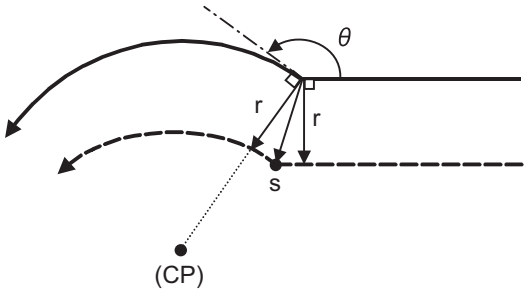 | 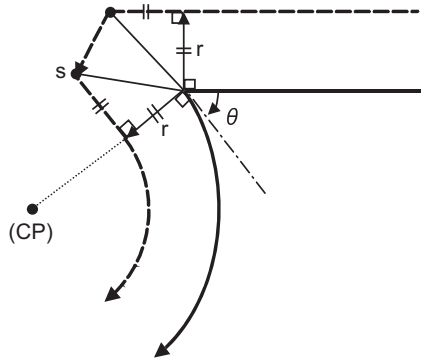 |
| **Circular -> Linear (90° <= θ < 180°)** | **Circular -> Linear (0° < θ < 90°)** |
| 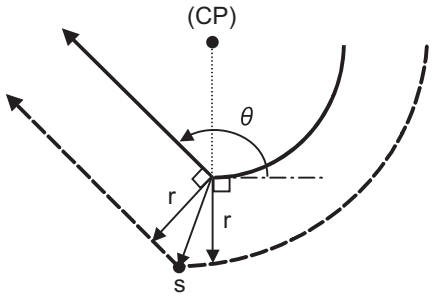 | 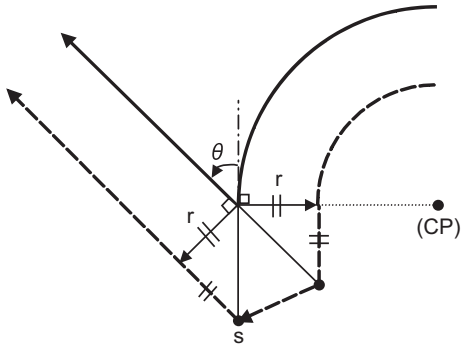 |
| **Circular -> Circular (90° <= θ < 180°)** | **Circular -> Circular (0° < θ < 90°)** |
| 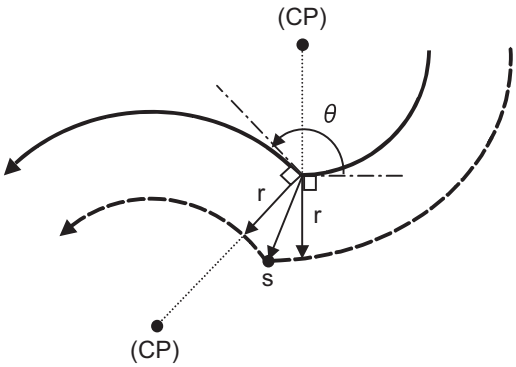 | 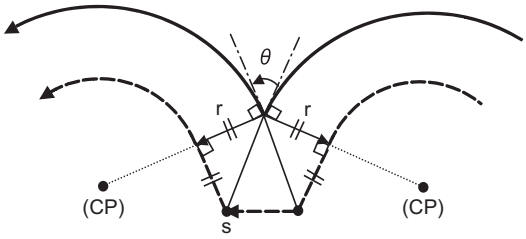 |

(CP) Center of circular

r : Compensation amount

s : Single block stop point

Program path

Tool center path

(2) Machining an inside corner

| Linear -> Linear (Obtuse angle) | Linear -> Linear (Acute angle) |
|---|---|
| 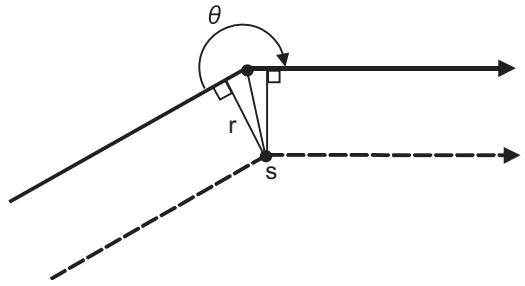 | 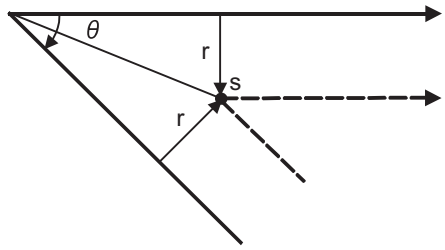 |
| **Linear -> Circular (Obtuse angle)** | **Linear -> Circular (Acute angle)** |
| 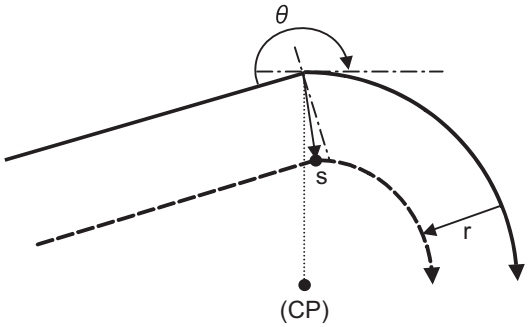 | 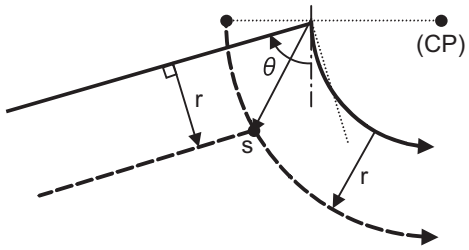 |
| **Circular -> Linear (Obtuse angle)** | **Circular -> Linear (Acute angle)** |
| 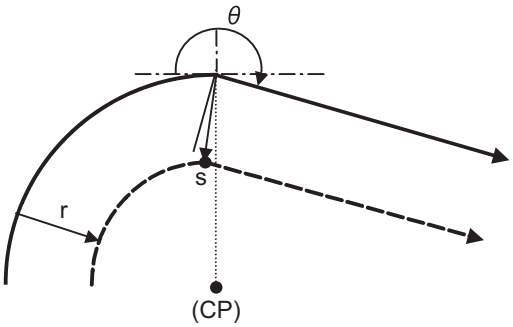 | 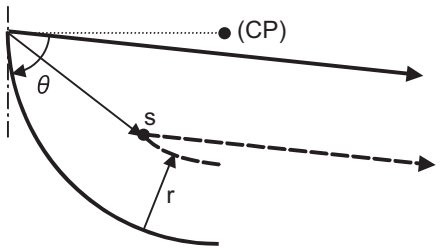 |
| **Circular -> Circular (Obtuse angle)** | **Circular -> Circular (Acute angle)** |
| 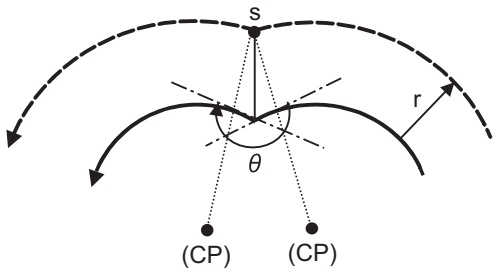 | 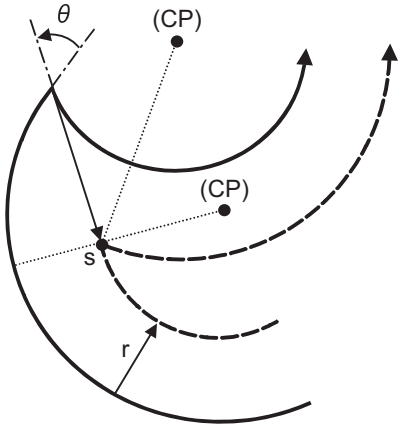 |

(CP) Center of circular

r : Compensation amount

s : Single block stop point

Program path

Tool center path

(3) When the circular end point is not on the circular

[Spiral circular command]

The area from the arc start point to the end point is interpolated as a spiral arc.

[Normal circular command]

If the error after compensation is within the parameter value, it is interpolated as a spiral arc.

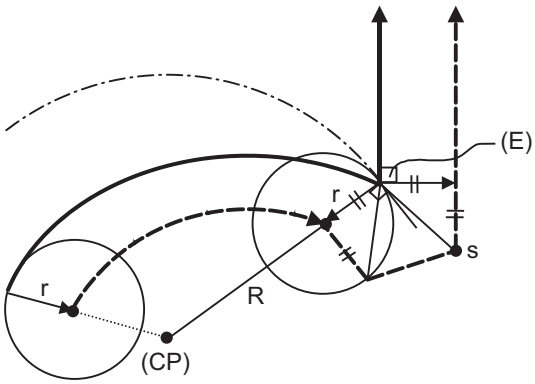


(E) End point of circular
(CP) Center of circular
r : Compensation amount

(4) When the inner intersection point does not exist

In cases such as that shown in the figure below, the intersection point of circulars A and B may not exist depending on the compensation amount.

In such cases, program error (P152) appears and the tool stops at the end point of the previous block.

In the pattern 1 and 2 in this figure, machining is possible because compensation amount r is small.

In pattern 3, compensation r is so large that an intersection does not exist and program error (P152) will occur.

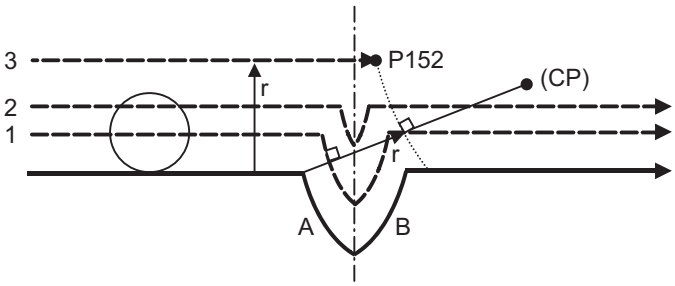


(CP) Center of circular A
r : Compensation amount

Program path  Tool center path

## Tool radius compensation cancel

If either of the following conditions is met in the tool radius compensation mode, the compensation will be canceled. However, this must be any movement command except a circular command.

If the compensation is canceled by a circular command, program error (P151) will occur.

(1) The G40 command has been executed.

The cancel mode is established once the compensation cancel command has been read, 5-block pre-reading is suspended and 1-block pre-reading will be operated.

### Tool radius compensation cancel operation

(1) Machining an inside corner

| Linear -> Linear | Circular -> Linear |
|---|---|
| 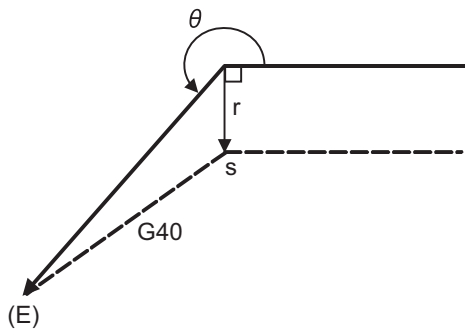  | 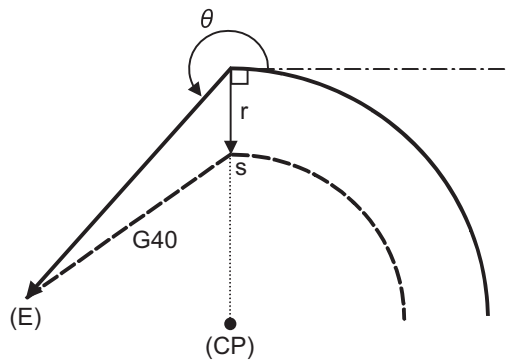  |

(E) End point
r : Compensation amount

(CP) Center of circular
s : Single block stop point

Program path

Tool center path

(2) Machining an outside corner (obtuse angle) [90° <= θ < 180°]

| Linear -> Linear (Type A) | Circular -> Linear (Type A) |
|---|---|
| 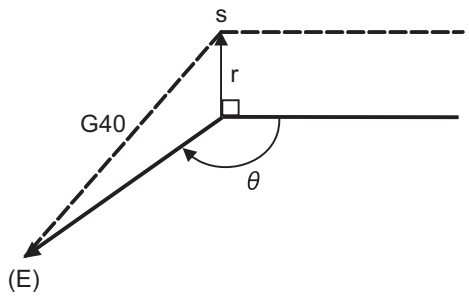  | 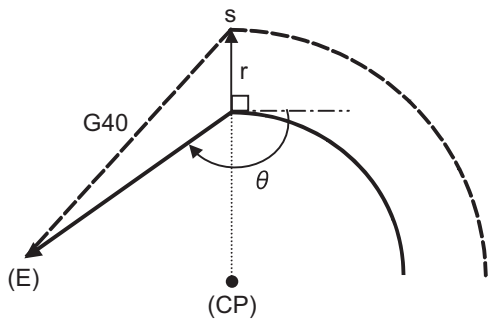  |
| **Linear -> Linear (Type B)** | **Circular -> Linear (Type B)** |
| 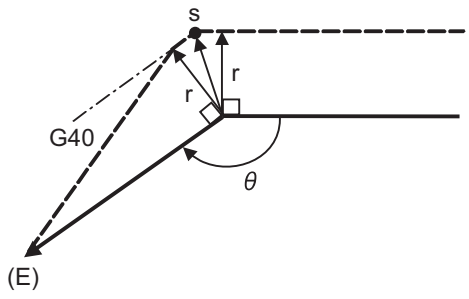  | 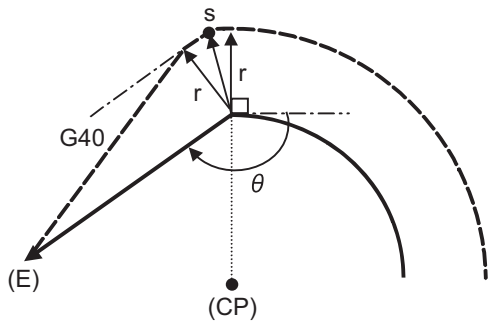  |

(E) End point
r : Compensation amount

(CP) Center of circular
s : Single block stop point

Program path

Tool center path

(3) Machining an outside corner (acute angle) [θ < 90°]

| Linear -> Linear (Type A) | Circular -> Linear (Type A) |
|---|---|
| 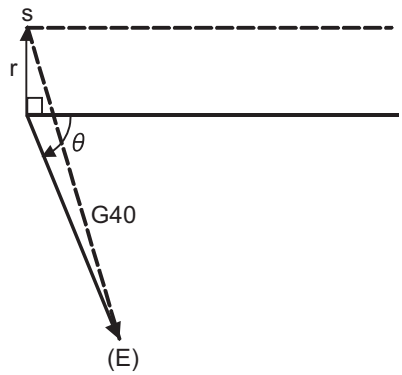  | 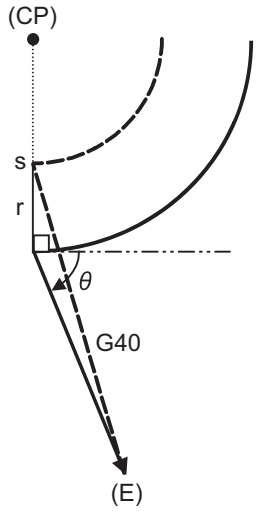  |
| **Linear -> Linear (Type B)** | **Circular -> Linear (Type B)** |
| 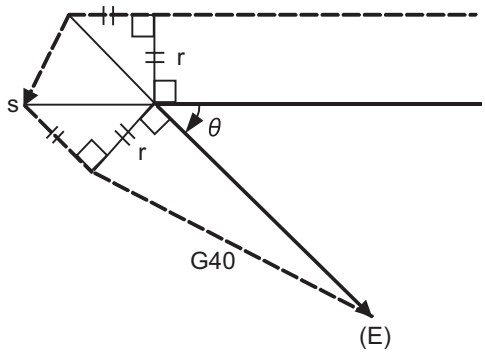  | 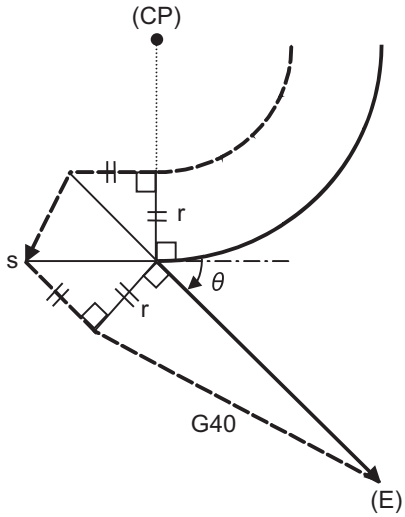  |

(E) End point
(CP) Center of circular
r : Compensation amount
s : Single block stop point

Program path

Tool center path

### Changing the compensation direction during tool radius compensation

| G code | Compensation direction |
|---|---|
| G41 | Left-side compensation |
| G42 | Right-side compensation |

The compensation direction can be changed by changing the compensation command during the compensation mode without canceling the mode.
However, it is impossible to change the direction in the compensation start block and the next block.

(1) Linear -> Linear

(a) When there is a point of intersection (A) when the compensation direction is changed.

(b) When there is no point of intersection when the compensation direction is changed.

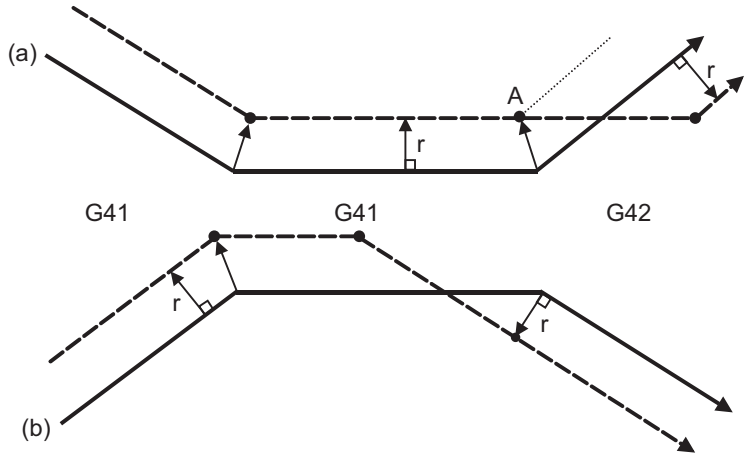


(2) Linear <-> Circular

(a) When there is a point of intersection (A) when the compensation direction is changed.

(b) When there is no point of intersection when the compensation direction is changed.

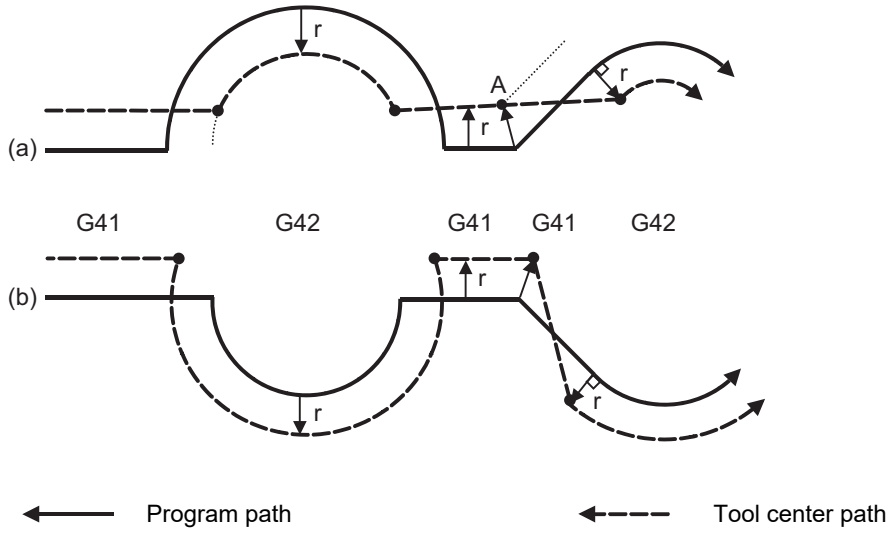

(3) Circular -> Circular

(a) When there is a point of intersection when the compensation direction is changed.

(b) When there is no point of intersection when the compensation direction is changed.

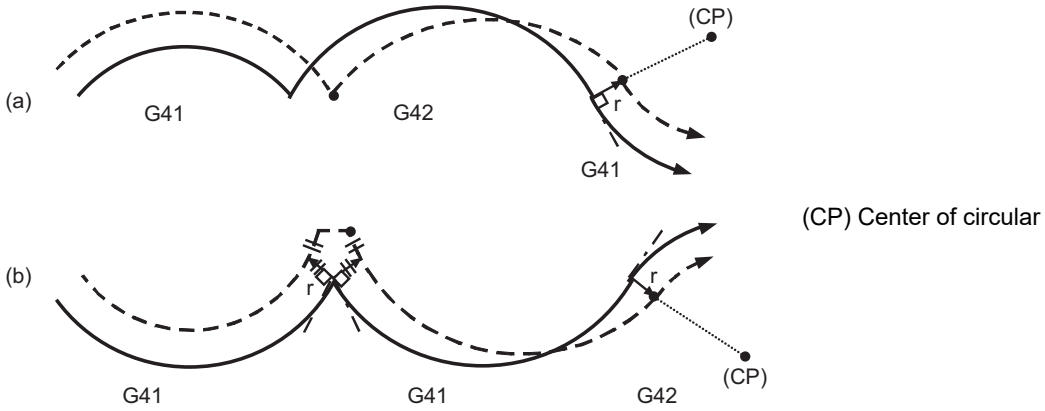


(4) Linear return

(5) When the compensation direction is switched using G41/G42, it is possible that the arc may exceed 360°.
If the arc exceeds 360°, compensation will be performed as shown in the figure and uncut section will be left.

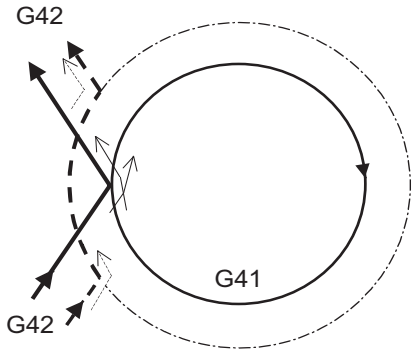


```
:
G42 G01 X_ Y_;
G41 G02 X_ Y_ I_ J_;
G42 G01 X_ Y_;
:
```

Program path

Tool center path

Section left uncut

### Command for eliminating compensation vectors temporarily

When the following command is issued in the compensation mode, the compensation vectors are temporarily eliminated and then, compensation mode will automatically return.
In this case, the compensation is not canceled, and the tool goes directly from the intersection point vector to the point without vectors, in other words, to the programmed command point. When returning to the compensation mode, it goes directly to the intersection point.

(1) Reference position return command

Compensation vector temporarily becomes 0 at the intermediate point (Reference position if there is no intermediate point).

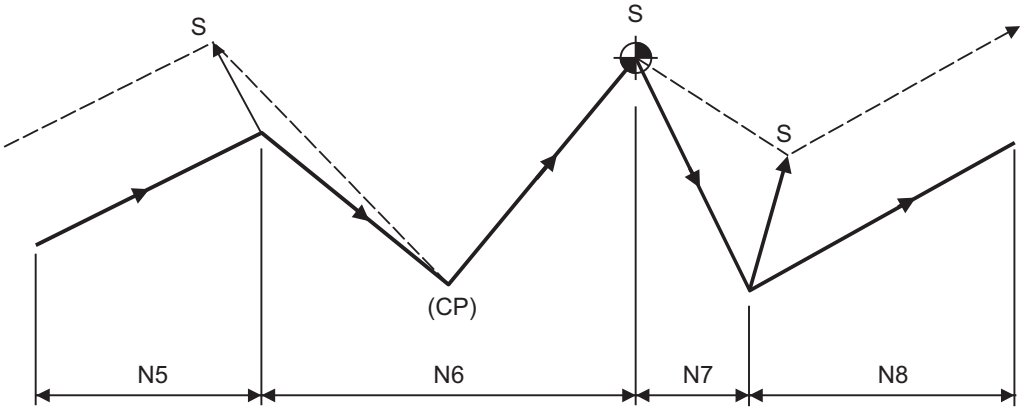


```
 (G41)  :
N5 G01 X60. Y30. ;
N6 G28 X50. Y-40. ;
N7     X30. Y-60. ;
N8     X70. Y40. ;
       :
```

(CP) Intermediate point

(2) The compensation vector will be eliminated temporarily with the G53 command (Basic machine coordinate system selection).

<Note>

- The compensation vectors do not change with the coordinate system setting (G92) command.

(3) Positioning (G00) commands

When G00 command is issued, the tool radius compensation is temporarily canceled.

```
    :
N1 G01 X_Y_F_;
N2 G00 X_Y_;
N3 G00 X_Y_;
N4 G00 X_Y_;
N5 G01 X_Y_;
    :
```

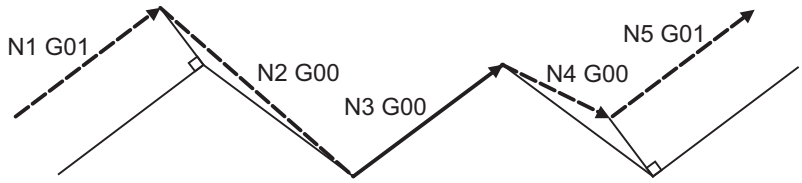


```
    :
N1 G01 X_Y_F_;
N2 G01 X_Y_;
N3 G00 X_Y_;
N4 G00 X_Y_;
N5 G01 X_Y_;
    :
```

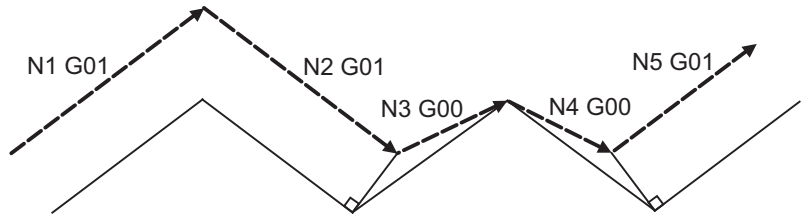


```
    :
N1 G01 X_Y_F_;
N2 G01 X_Y_;
N3 G01 X_Y_;
N4 G00 X_Y_;
N5 G01 X_Y_;
    :
```

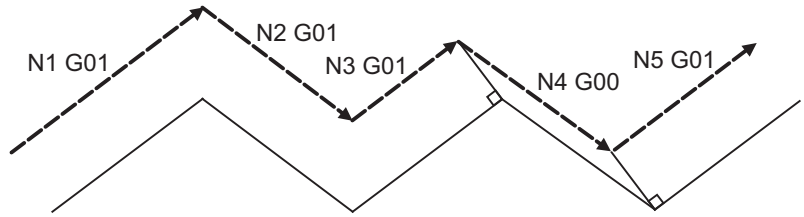


(4) G33 thread cutting command

Tool radius compensation does not apply to the G33 block.

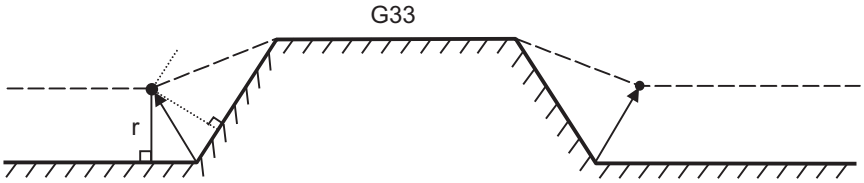


(5) Compound type fixed cycle for turning machining

When a compound type fixed cycle for turning machining I command (G70, G71, G72, G73) is issued, the nose radius compensation will temporarily be canceled, since the finished shape already includes the compensation amount and, upon completion of the cutting, operation will automatically return to the compensation mode.

### Blocks without movement and M commands inhibiting pre-reading

The following blocks are known as blocks without movement.

| | |
|---|---|
| M03 ; | M command |
| S12 ; | S command |
| T45 ; | T command |
| G04 X500 ; | Dwell |
| G22 X200. Y150. Z100. ; | Machining prohibited region setting |
| G10 L10 P01 R50 ; | Compensation amount setting |
| G92 X600. Y400. Z500. ; | |
| (G17)Z40 ; | Movement outside the compensation plane |
| G90 ; | G code only |
| G91 X0 ; | Movement amount 0 |

M00, M01, M02, and M30 are treated as M codes which prohibit pre-reading.

(1) When command is assigned at start of the compensation
Compensation vector cannot be created when there are four or more successive blocks without movement, or when pre-reading prohibiting M command is issued.

```
N1 X30.Y60 ;
N2 G41 ;
N3 G04 X1000 ;
N4 F100 ;
N5 S500 ;
N6 M3 ;
N7 X20.Y-50. ;
N8 X50.Y-20. ;
```

Block without movement

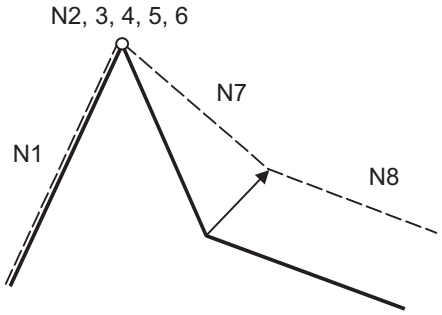


(2) When commanded during the compensation mode
Compensation vector will be created as normal when there are not four or more successive blocks without movement, or when pre-reading prohibiting M command is not issued.

```
N6 G91X100. Y200. ;
N7 G04 X1000 ;          ... Block without movement
N8 X200 ;
```

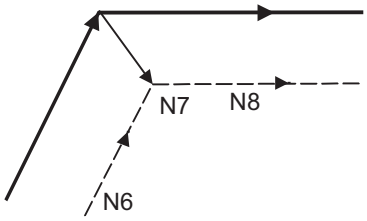


Block N7 is executed at N7 in the figure.

When four or more blocks without movement follow in succession or if there is a pre-reading inhibiting M code, the compensation vectors are created perpendicularly at the end point of the previous block. In this case, a cut may occur.

```
N6 X100. Y200. ;
N7 G04 X1000 ;
N8 F100 ;
N9 S500 ;
N10 M4 ;
N11 X100 ;
```

Block without movement

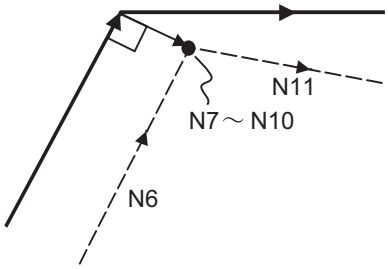

(3) Compensation cancel alone

(a) G01 precedes the block containing G40: Compensation is canceled by a movement command following G40.

(b) G00 precedes the block containing G40: Compensation is canceled by a G00 command before G40.

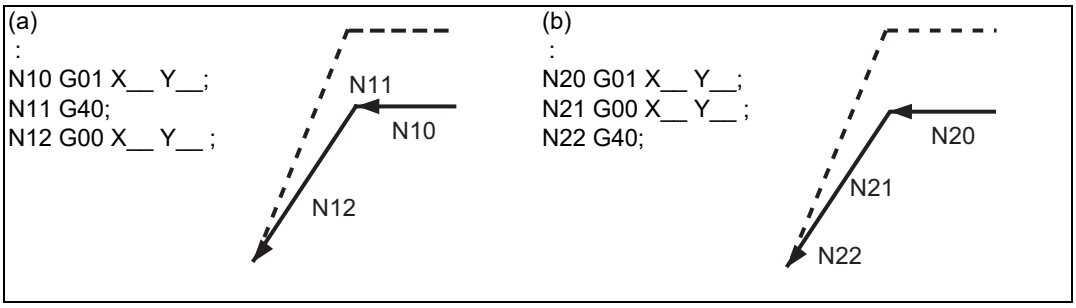


<Note>

- In program (a), if G13.1 is commanded after G40 without a movement command, cancellation is done at G13.1 block.

## Corner movement

When a multiple number of compensation vectors are created at the joints between movement command blocks, the tool will move in a straight line between these vectors.

This action is called corner movement.
When the vectors do not coincide, the tool moves in order to machine the corner although this movement is part and parcel of the joint block. Consequently, in the single block mode, the previous block + corner movement will be executed as a single block and the remaining joint movement + following block will be executed as a single block in the next operation.

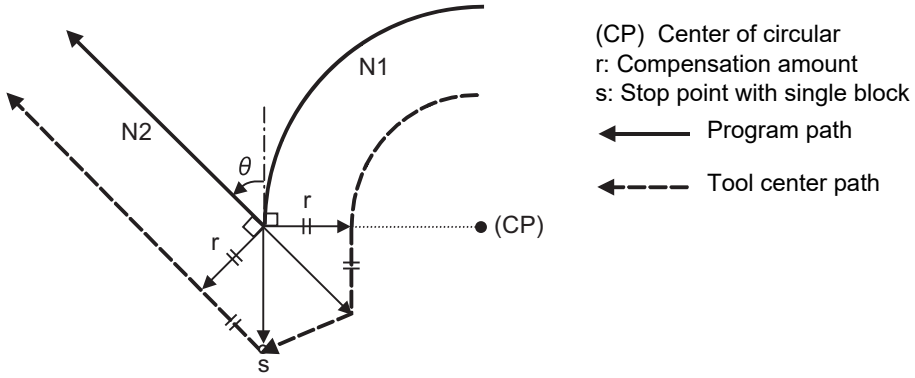

## 6.8.9.2 Interference Check

### Function and purpose

When tool radius is larger than the program path, a tool, compensated for by the tool radius compensation function, may sometimes cut into the workpiece. This is known as interference, and interference check is the function which prevents this from occurring.
The table below shows the three functions of interference check and each can be selected for use by parameter.

| | Function | Parameters | | Operation |
|---|---|---|---|---|
| | | #8102 COLL. ALM OFF | #8103 COLL. CHK OFF | |
| (1) | Interference check alarm function | 0 | 0 | Operation stops with a program error (P153) before executing a block which will cause cutting. |
| (2) | Interference check avoidance function | 1 | 0 | The tool path is changed to prevent cutting from occurring.<br>If the path cannot be changed, a program error (P153) occurs and the program will be stopped. |
| (3) | Interference check invalid function | 0/1 | 1 | Cutting continues as is, even if the workpiece is cut into.<br>Use in the fine segment program. |

### Detailed description

#### Conditions viewed as interference

When there is a movement command in three of the five pre-read blocks, and if the compensation calculation vectors which are created at the contacts of movement commands intersect each other, it will be viewed as interference.

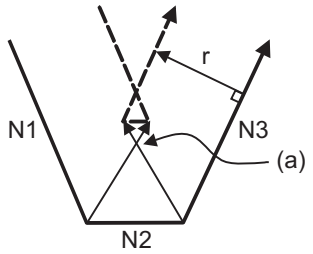


r : Compensation amount
(a) Vectors intersect
Program path
Tool center path

(Example 1) When operating a program including a short segment with a tool with a large radius, cutting will occur in the shaded section.

(G41)
N1 G01 X50. Y-100. ;
N2 X70. Y-100. ;
N3 X120. Y0 ;

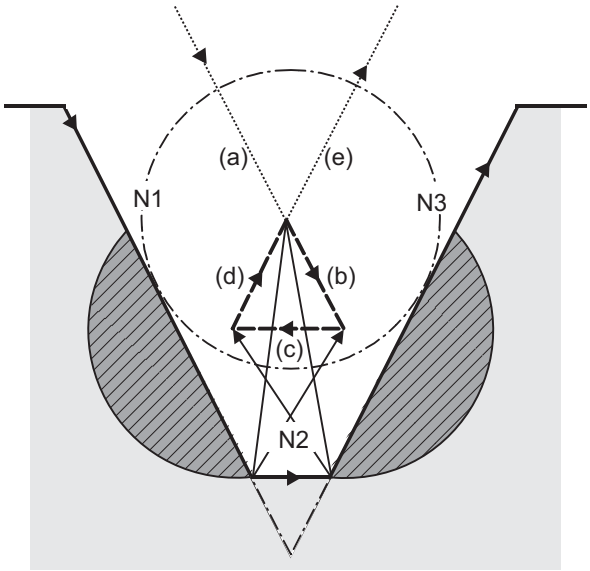


(1) With alarm function
An alarm is output before N1 is executed. The buffer correction function can thus be used to change N1 to the following, enabling machining to continue: N1 G01 X20. Y-40.;

(2) With avoidance function
The intersection of N1 and N3 is calculated to create interference avoidance vectors.
Tool center path is (a) -> (e).

(3) With interference check invalid function
The tool passes while cutting the N1 and N3 line.
Tool center path is (a)->(b)->(c)->(d)->(e) .

(Example 2) When operating a program including a small circular with a tool with a large radius, cutting occurs near the start point/end point of the circular in the following figure.

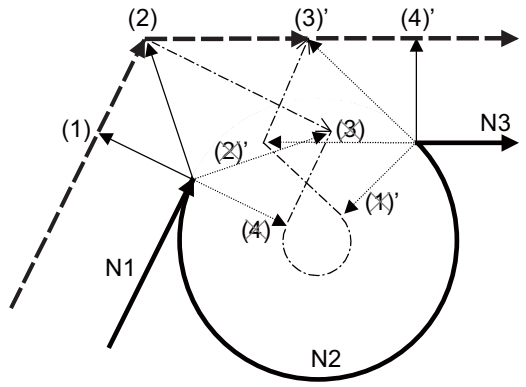


Interference check processing
Vectors (1) (4)' check -> No interference
↓
Vectors (2) (3)' check -> No interference
↓
Vectors (3) (2)' check -> Interference -> Erase vectors (3) (2)'
↓
Erase vectors (4) (1)'

(1) With alarm function.
The alarm occurs before N1 is executed.

(2) With avoidance function.
With the above process, the vectors (1), (2), (3)' and (4)' will remain as the valid vectors. The tool center path will follow the path that connects vectors (1), (2), (3)' and (4)', as the interference avoidance path.

(Thick broken line path)

(3) With interference check invalid function.
The tool center path will follow the path that connects (1), (2), (3), (4), (1)', (2)', (3)', (4)', as the interference avoidance path while cutting.

(Thin broken line path)

## When interference check cannot be executed

(1) When three of the movement command blocks cannot be pre-read
(when there are three or more blocks in the five pre-read blocks that are not moving)

(2) When there is an interference following the fourth movement block

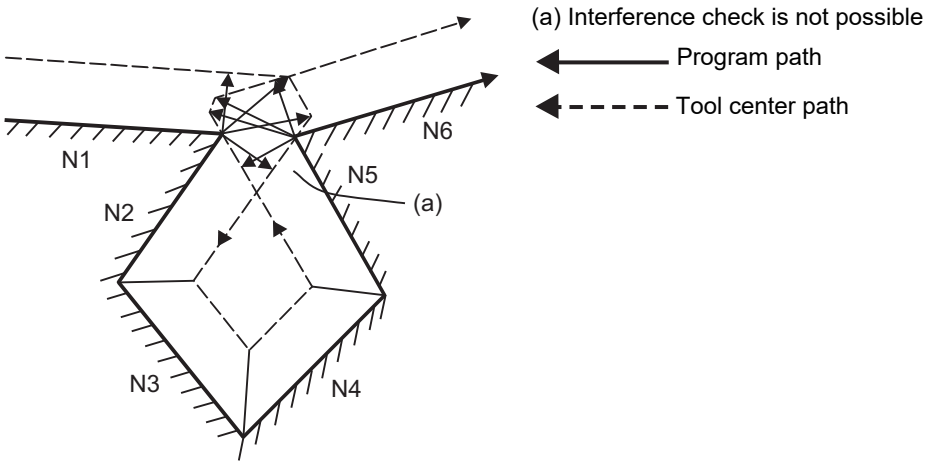

### Operation when interference avoidance function is valid

The movement will be as shown below when the interference avoidance check is valid.

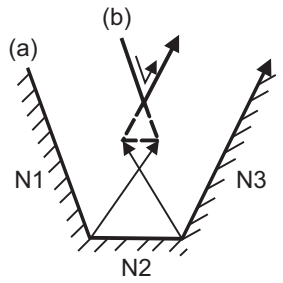


(a) Program path (b) Tool center path

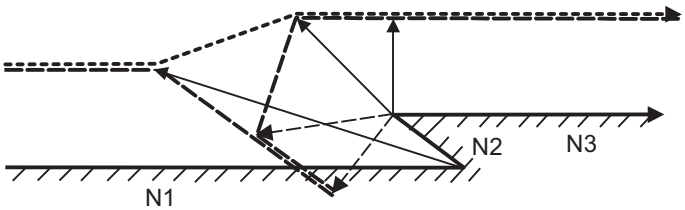


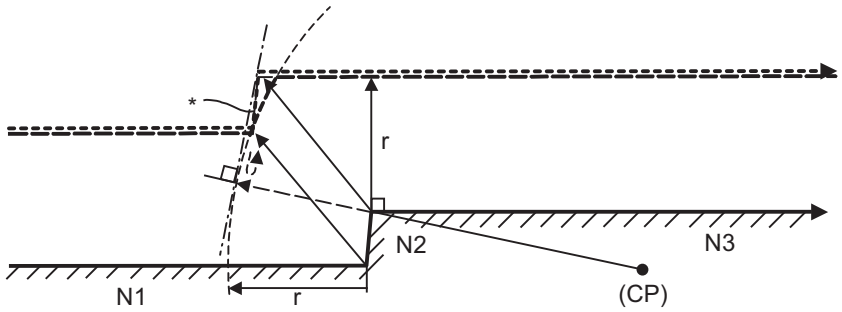


Program path

Tool center path without interference check

Tool center path when interference is avoided (*: Linear movement)

Valid vector

Invalid vector

If all of the line vectors for the interference avoidance are deleted, create a new avoidance vector as shown in below to avoid the interference.

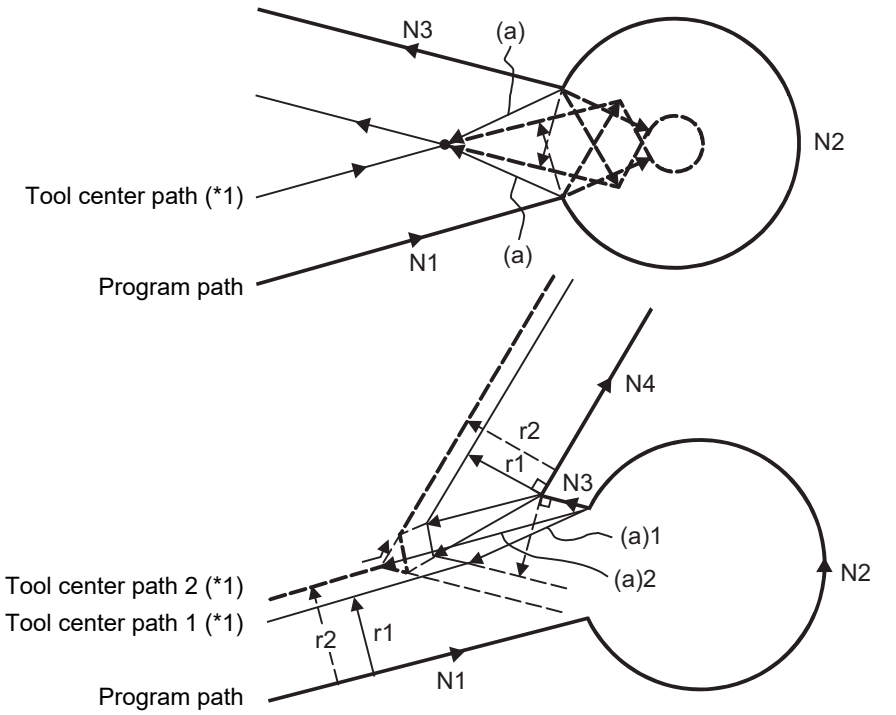


(a) Avoidance vector

(*1) Tool center path when interference is avoided

In the case of the figure below, the groove will be left uncut.

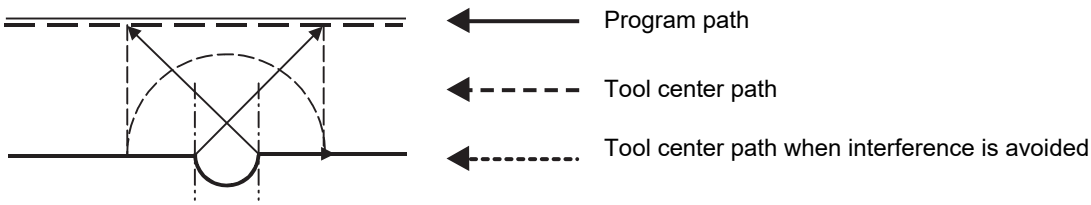

### Interference check alarm operation

The interference check alarm occurs under the following conditions.

(1) When the interference check alarm function has been selected

When all the vectors at the end of its own block have been deleted.

When, as shown in the figure below, vectors 1 through 4 at the end point of the N1 block have all been deleted, program error (P153) will occur prior to N1 execution.

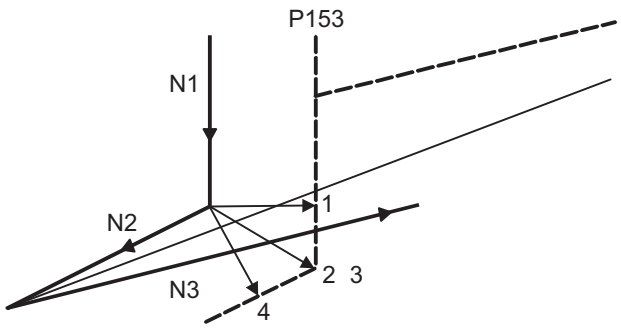


(2) When the interference check avoidance function has been selected

(Example 1) When there are valid vectors at the end point of the following blocks even when all the vectors at the end point of its own block have been deleted.

When, in the figure below, the N2 interference check is conducted, the N2 end point vectors are all deleted but the N3 end point vectors are regarded as valid.
When, in the figure below, the N2 interference check is conducted, the N2 end point vectors are all deleted but the N3 end point vectors are regarded as valid. Program error (P153) now occurs at the N1 end point and the operation stops.

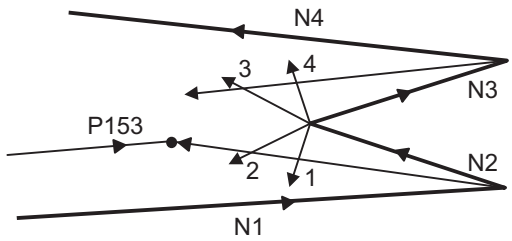


In the case shown in the figure below, the tool will move in the reverse direction at N2.
Program error (P153) now occurs before executing N1 and the operation stops.

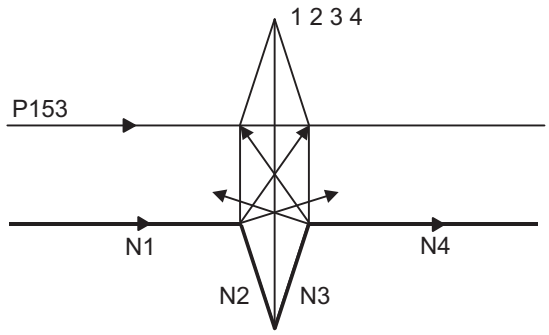

(Example 2) When avoidance vectors cannot be created.

Even when, as in the figure below, the conditions for creating the avoidance vectors are satisfied, it may still not be possible to create avoidance vectors, or the interference vectors may interfere with N3.
Program error (P153) will occur at the N1 end point when the vector intersecting angle is more than 90° and the operation will stop.

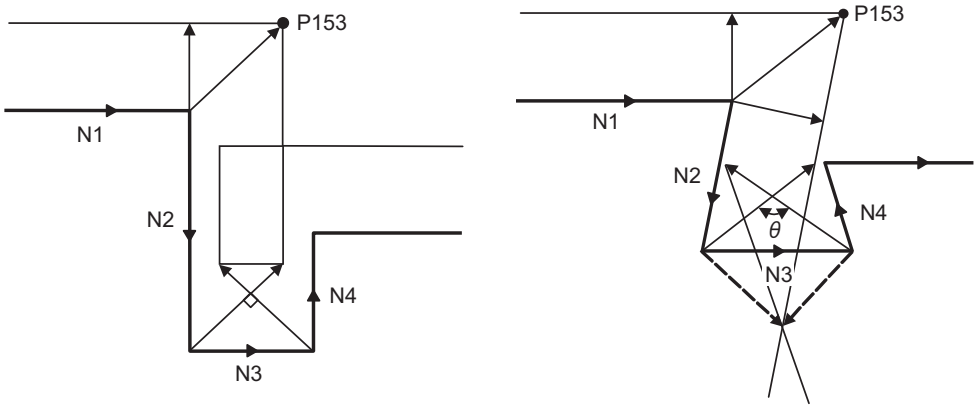


(Example 3) When the program advance direction and the advance direction after compensation are reversed.

When grooves, narrower than the tool radius with parallel or widening bottom, are programmed, it will still be regarded as interference even if there is actually no interference.

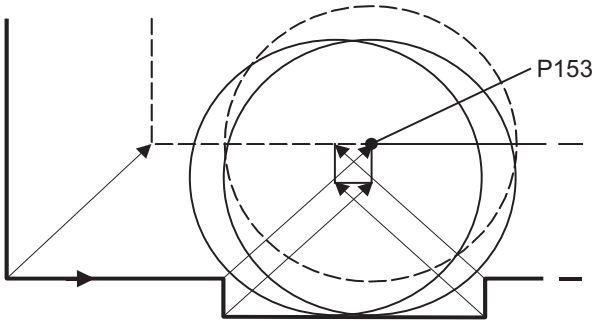


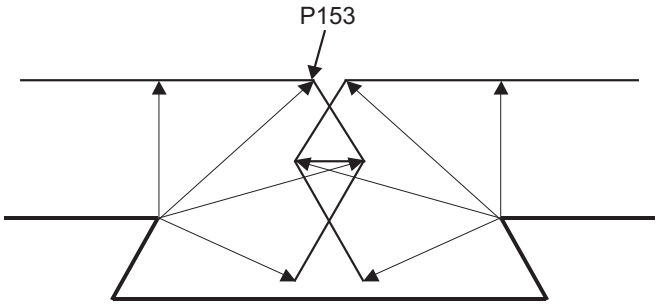

(Example 4) Command for eliminating compensation vectors temporarily.

Interference check will be executed even at the end point of the block right before the command to eliminate compensation vectors temporarily, as well as when the command is not issued.
It may be regarded as an interference even if there is actually no interference. If regarded as an interference, program error (P153) will occur.

In the figure below, only vector 1 is left as an end point vector in N2 because of the N3 G53 command to temporarily eliminate compensation vectors. However, the interference check will still be conducted to vector 1 to 4 and an interference will be detected.
Program error (P153) now occurs at the end point of the previous block and the operation stops.

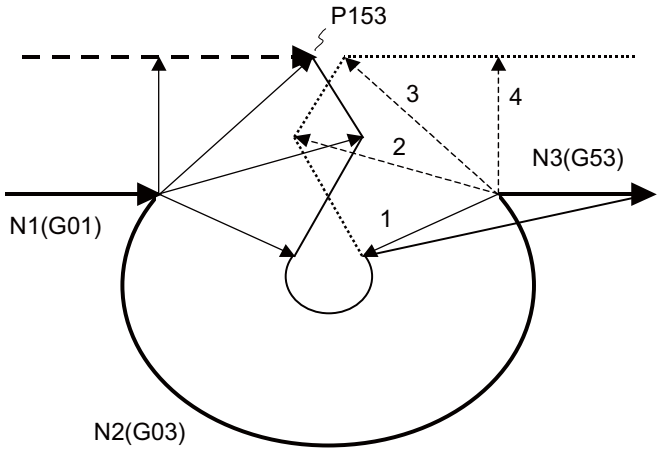


Program path

Tool center path

Tool center path when the interference check is invalid

Tool center path when the interference check is invalid in N3 due to a command (G01 etc.) not to eliminate compensation vectors.

Valid vector

Invalid vector (Invalid, however, subject to interference check)

## 6.8.10 Relationship between Milling Interpolation and Other Functions

### Relationship with other functions

#### Program support functions

The following program support functions are valid in milling mode:

(1) Linear angle command
(2) Variable commands
(3) Automatic corner chamfering/corner rounding
(4) Geometric function
(5) Hole drilling cycle
(6) Subprogram function
(7) User macro

#### Restart search

(1) Restart search cannot be performed for all blocks after milling mode is started. The program error (P49) occurs.

#### Miscellaneous functions

(1) M and B commands can be issued in milling mode.
(2) In milling mode, an S command specifies not the spindle rotation speed but the rotary tool speed.
(3) If a T command is issued in milling mode, the program error (P485) occurs. Therefore, select the tool before issuing G12.1.

```
    :
    :
T1212  ;          Specify a T command before a G12.1 command.
G00  X100.  Z0.  ;
G12.1  ;          (or G12.1 E=C,D0 ;)
    :
T1200  ;          In a milling mode, a T command causes the program error (P485).
    :
G13.1  ;
```

(4) Complete the tool compensation operation (movement of tool length and wear compensation amount) before executing the milling interpolation.
If the tool compensation operation is not completed when the milling interpolation start command has been issued, the operations are as follows:

- Machine coordinate does not change even if G12.1 is executed.
- When G12.1 is executed, the workpiece coordinate changes to that of the post tool length compensation. (Even if the milling interpolation is canceled, this workpiece coordinate does not canceled.)

(Example)

Workpiece coordinate offset (X axis) = 20

Tool compensation amount of T0101 (X axis) = 100

Setting to perform compensation operation by movement command after T command

| <Machining program> | <Workpiece coordinate> | | <Machine coordinate> | | |
|---|---|---|---|---|---|
| : | [X axis] | [C axis] | [X axis] | [C axis] | |
| G00 X200. C0.; | 200. | 0. | 220. | 0. | |
| T0101; | 200. | 0. | 220. | 0. | |
| G12.1; | 100. | 0. | 220. | 0. | <-The workpiece coordinate system is shifted (without moving the axis) |
| G01 X50. F1000; | 50. | 0. | 170. | 0. | |
| : | | | | | |

## Operation switching for circular interpolation in the center of a workpiece (G17)

Refer to "Operation switching for circular interpolation in the center of a workpiece" in "6.10 Polar Coordinate Interpolation; G12.1, G13.1/G112, G113 (Only 6 and 7 in G Code List)". In this case, read "polar coordinate plane" in the text as "G17 plane".

# 6.9 Cylindrical Interpolation; G07.1

## Function and purpose

This function develops a shape on the side of a cylinder (shape in a cylindrical coordinate system) into a plane. When the developed shape is programmed as the plane coordinates, it will be converted into a linear axis movement and rotation axis (hypothetical C axis) movement in the original cylindrical coordinates to conduct contour control when machining.

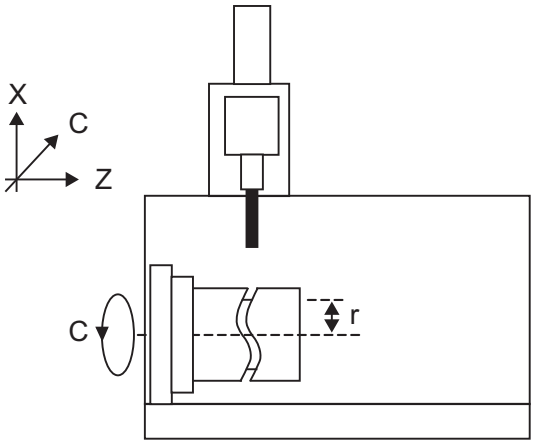


As programming can be carried out to the developed shape of the side of the cylinder, this is effective for machining cylindrical cams, etc. When programmed with the rotary axis and its orthogonal axis, grooves and other shapes can be machined on the side of the cylinder.

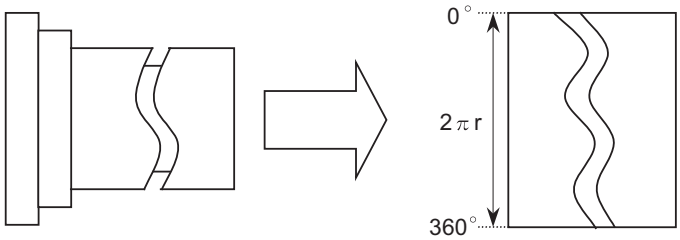


## Command format

**Cylindrical interpolation mode start**

| |
|---|
| **G07.1 Rotary axis name, rotation radius value;** |
| **G107 Rotary axis name, rotation radius value;** |

| | |
|---|---|
| Rotary axis name | Axis name assigned to rotary axis |
| Rotation radius value | Command a value other than "0".<br>When a value other than "0" is commanded, the cylindrical interpolation mode starts. |

**Cylindrical interpolation mode cancel**

| |
|---|
| **G07.1 Rotary axis name 0;** |
| **G107 Rotary axis name 0;** |

## Detailed description

(1) The cylindrical interpolation is carried out between the rotary axis designated in the G07.1 block and another linear axis. (The following example shows a case in which the rotary axis name is set to "C".)

| | |
|---|---|
| G19 ; | Plane selection |
| G07.1 C20. ; | Cylindrical interpolation mode start (Cylindrical interpolation will start.) |
| : | (The coordinate commands in this interval will be the cylindrical coordinate system) |
| G07.1 C0 ; | Cylindrical interpolation mode cancel (Cylindrical interpolation will be canceled.) |

(2) G107 can be used instead of G07.1.

(3) Command G07.1 alone in a block. If it is commanded in the same block with other G code, a program error (P33) will occur.

(4) The cylindrical interpolation mode is canceled when the power is turned ON or at resetting.

(5) Linear interpolation or circular interpolation can be commanded during the cylindrical interpolation mode. Note that the plane selection command must be issued just before or after the G07.1 block.

(6) The coordinate commands can be both an absolute command or incremental command.

(7) Tool radius compensation can be applied on the program command. Cylindrical interpolation will be executed to the path after it has gone through a tool radius compensation.

(8) Command the tangent speed on the developed cylinder by F. F is in mm/min or inch/min unit.

(9) A program error (P484) will occur if any axis commanded during cylindrical interpolation has not completed the reference position return.

(10) The deceleration check is made for the cylindrical interpolation start command block.

### Cylindrical interpolation accuracy

In the cylindrical interpolation mode, the movement amount of the rotary axis commanded with an angle is converted into distance on a circle periphery, and after calculating the linear and circular interpolation between the other axes, the amount is converted into an angle again.
Thus, the actual movement amount may differ from the commanded value such as when the cylinder radius is small. Note that the gap generated by this will not be cumulated.

### Cylindrical interpolation mode cancel

(1) To cancel the cylindrical interpolation mode, the following condition must be satisfied.

- Tool radius compensation is canceled.

(2) When the cylindrical interpolation mode is canceled, the plane selected before the cylindrical interpolation will be restored.

(3) The deceleration check is made for the cylindrical interpolation cancel command block.

## Plane selection

The axis used for cylindrical interpolation must be set with the plane selection command.

Use parameters (#1029, #1030 and #1031) to set which parallel axis corresponds to the rotary axis.
The circular interpolation and tool radius compensation, etc., can be designated on that plane.
The plane selection command is set immediately before or after the G07.1 command. If a movement command is issued without this command, a program error (P485) will occur.

(Example)

| | |
|---|---|
| G19 Z0. C0. ; | Plane selection command for cylindrical interpolation, and 2-axis command of Z axis and C axis for interpolation |
| G07.1 C100. ; | Cylindrical interpolation start |
| : | |
| G07.1 C0 ; | Cylindrical interpolation cancel |

Basic coordinate system
X, Y, Z

Cylindrical coordinate system
C, Y, Z
(Rotary axis is X axis' parallel axis)
#1029

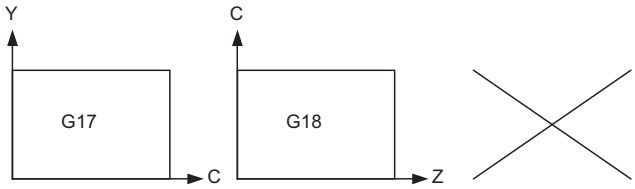


Cylindrical coordinate system
X, C, Z
(Rotary axis is Y axis' parallel axis)
#1030

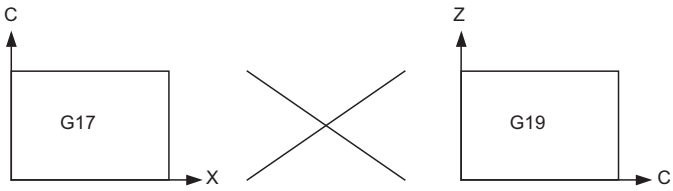


Cylindrical coordinate system
X, Y, C
(Rotary axis is Z axis' parallel axis)
#1031

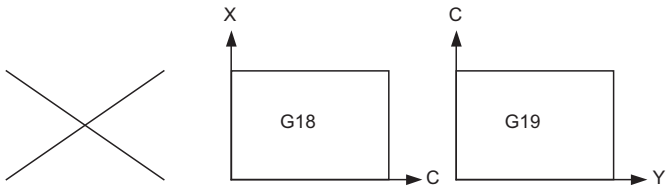

### Program example

<Program>

```
N01 G28 XZC ;
N02 T0202 F500 ;
N03 G97 S100 M23 ;
N04 G00 X50. Z0. ;
N05 G94 G01 X40. F100. ;
N06 G19 C0 Z0 ;                    Plane selection command for cylindrical interpolation and two axes
                                   command for interpolation
N07 G07.1 C20. ;                   Cylindrical interpolation start
N08 G41 ;
N09 G01 Z-10. C80. F150 ;
N10 Z-25. C90. ;
N11 Z-80. C225. ;
N12 G03 Z-75.C270. R55. ;
N13 G01 Z-25. ;
N14 G02 Z-20.C280. R80. ;
N15 G01 C360. ;
N16 G40 ;
N17 G07.1 C0 ;                     Cylindrical interpolation cancel
N18 G01 X50. ;
N19 G00 X100. Z100. ;
N20 M25 ;
N21 M30 ;
```

<Parameters>

#1029 aux_I

#1030 aux_J C

#1031 aux_K

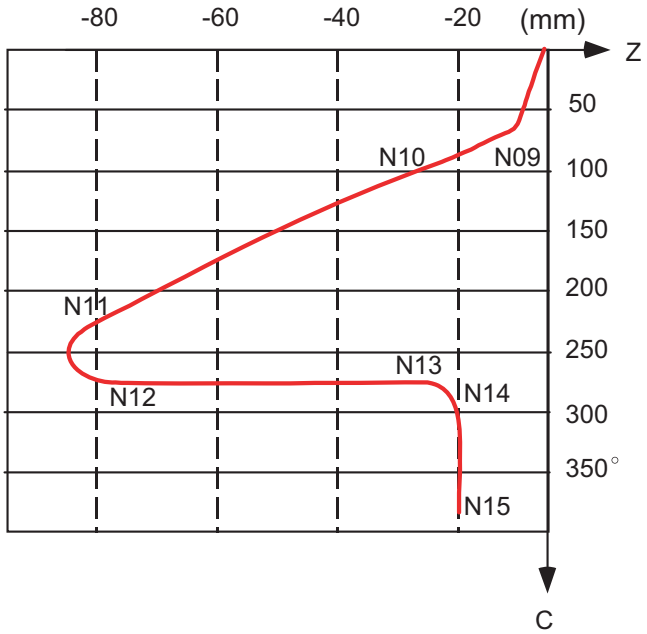

## Relationship with other functions

### Circular interpolation

(1) Circular interpolation between the rotary axis and linear axis is possible during the cylindrical interpolation mode.

(2) Only the R specification command (mm/inch) is available for circular interpolation. (I, J and K cannot be designated.)

(3) An arc is drawn on the developed surface of the cylinder in the circular interpolation, thus the calculation is performed with the C axis unit in millimeters (mm).

| | |
|---|---|
| N1 G18 Z-5.C0.; | Perform positioning at Z-5 mm, C0 degrees. (The parameter "#1029 aux_I" is "C".) |
| N2 G07.1 C100.; | Start cylindrical interpolation mode of radius 100 mm. |
| N3 G02 Z-15. R5.; | Perform circular interpolation of radius 5 mm to Z-15 mm. |

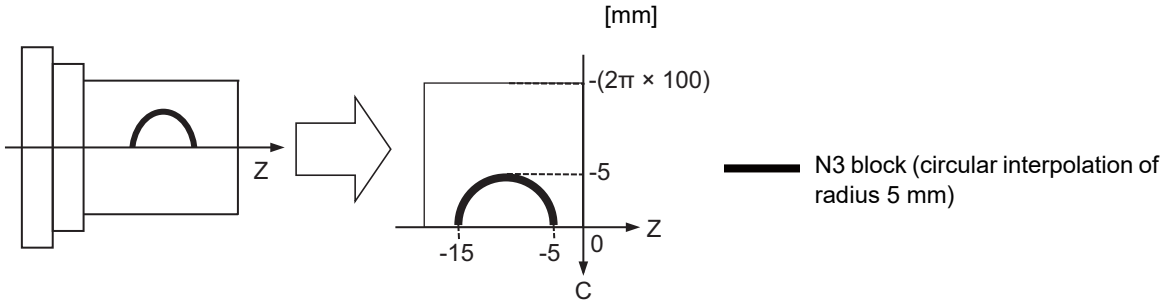


### Tool radius compensation/tool nose radius compensation

The tool radius can be compensated during the cylindrical interpolation mode.

(1) Command the plane selection in the same manner as circular interpolation.
When using tool radius compensation, start up/cancel the compensation in the cylindrical interpolation mode.

(2) A program error (P485) will occur if G07.1 is commanded during tool radius compensation.

(3) If the G07.1 command is issued with no movement command after the tool radius compensation has been canceled by commanding G40 alone, the position of the axis in the G07.1 command block is interpreted as the position applied after the tool radius compensation has been canceled and the following operations are performed.

### Miscellaneous functions

(1) The miscellaneous functions (M) and 2nd miscellaneous functions (B) can be issued in the cylindrical interpolation mode.

(2) The S command in the cylindrical interpolation mode specifies the rotary tool's rotation speed instead of the spindle rotation speed.

### Tool length compensation

(1) Issue the T command before starting cylindrical interpolation. Program error (P485) will occur if T command is issued in the cylindrical interpolation mode.

```
    :
T1212 ;              T command before cylindrical interpolation -> Valid
G00 X100. Z0. ;
G19 Z C ;
G07.1 C100. ;
    :
T1200 ;              T command in cylindrical interpolation mode -> Program error
    :
G07.1 C0 ;
```

(2) Complete the tool compensation operation (movement of tool length and wear compensation amount) before executing the cylindrical interpolation.
If the tool compensation operation is not completed when the cylindrical interpolation start command is issued, the followings will occur:

The workpiece coordinate system shifts so that the relationship between the machine coordinate position and workpiece coordinate position matches the "positional relationship after the tool compensation has been completed" without actually moving the axis.
The workpiece coordinate system shifted here is not reset even if the cylindrical interpolation is canceled. The subsequent operations are performed, assuming that the tool compensation operation has been completed.

### Feed mode and F command before and after cylindrical interpolation mode

The operation varies depending on whether the synchronous feed is valid or invalid during cylindrical interpolation. Whether the synchronous feed is valid or invalid depends on the MTB specifications (parameter "#1293 ext29"/bit0).

(1) When the synchronous feed is invalid (#1293 ext29/bit0 = 0):

Only the asynchronous feed is valid during the cylindrical interpolation mode.
If the synchronous feed command (G95) is issued during the cylindrical interpolation mode, a program error (P481) will occur.
The operation to be performed when the cylindrical interpolation mode is started or canceled varies depending on the feed mode that is specified before the cylindrical interpolation mode is started.

| Feed mode before start | Operation in cylindrical interpolation mode (At start/cancel) |
|---|---|
| Asynchronous feed (G94) | The previous feed mode (asynchronous feed) and the feedrate designated with the F command are inherited when the cylindrical interpolation mode is started or canceled. |
| Synchronous feed (G95) | When the cylindrical interpolation mode is started, the asynchronous mode is enabled forcibly, and the feedrate is canceled.<br>After the cylindrical interpolation mode has been started, designate the feedrate using the F command.<br>A program error (P62) will occur if the F command is not designated.<br>When the cylindrical interpolation mode is canceled, the setting returns to the feed mode (synchronous feed) and feedrate before the cylindrical interpolation mode starts. |

(2) When the synchronous feed is valid (#1293 ext29/bit0 = 1):

Both the synchronous feed and asynchronous feed are valid during the cylindrical interpolation mode.
The feed mode and feedrate remain unchanged and take over the previous state when the cylindrical interpolation mode is started or canceled.

| Synchronous feed function valid/invalid (#1293 bit0) | Change of feed mode and feedrate | | |
|---|---|---|---|
| | Before the cylindrical interpolation mode starts | When the cylindrical interpolation mode starts | When the cylindrical interpolation mode is canceled |
| Invalid | Asynchronous feed | Asynchronous feed<br>Feedrate just before start | Asynchronous feed<br>Feedrate just before cancel |
| | Synchronous feed | Asynchronous feed<br>Feedrate = 0 (Cancel) | Synchronous feed<br>Feedrate before cylindrical interpolation starts |
| Valid | Asynchronous feed | Asynchronous feed<br>Feedrate just before start | Feed mode just before the mode is canceled<br>Feedrate just before cancel |
| | Synchronous feed | Synchronous feed<br>Feedrate just before start | |

### Cylindrical interpolation coordinate system

In the cylindrical coordinate system of the rotary axis for cylindrical interpolation, the coordinate positions depend on the MTB specifications (#1270 ext06/bit7).

| Parameter setting (#1270 bit7) | Coordinate position of rotary axis in cylindrical coordinate system |
|---|---|
| 0 | In this coordinate system, the rotary axis position is set to "0" when the cylindrical interpolation start command is issued. |
| 1 | The workpiece coordinate positions just before the cylindrical interpolation starts are also continued to be used during cylindrical interpolation. |

### Cylindrical interpolation function: Combinations of G code commands

The table below shows whether G codes are available during the cylindrical interpolation mode (G07.1).

○: This function is available during the cylindrical interpolation mode.
Δ: This function is available, however, it is partially restricted.
×: Alarm generation (the text in parentheses refers to the number of the program error to be generated.)

| Group | G code (G code list: 3) | Availability |
|---|---|---|
| 0 | G04 | ○ |
| | G09 | ○ |
| | G10 | × (P481) |
| | G11 | × (P481) |
| | - (G22(*)) | ○ |
| | - (G23(*)) | ○ |
| | G27 | × (P481) |
| | G28 | × (P481) |
| | G29 | × (P481) |
| | G30 | × (P481) |
| | G30.1 | × (P481) |
| | G30.2 | × (P481) |
| | G30.3 | × (P481) |
| | G30.4 | × (P481) |
| | G30.5 | × (P481) |
| | G31 | × (P481) |
| | G31.1 | × (P481) |
| | G31.2 | × (P481) |
| | G31.3 | × (P481) |
| | G37 (G36/G37, G37.1, G37.2(*)) | × (P481) |
| | G92 | × (P481) |
| | - (G50.2, G250(*)) | ○ |
| | - (G51.2, G251(*)) | × |
| | G92.1 | × (P481) |
| | G52 | × (P481) |
| | G53 | × (P481) |
| | G65 | ○ |
| | G110 | × (P501) |
| | G111 | × (P411) |
| | G113 | ○ |
| | G114.1 | ○ |
| | G114.2 | × |
| | G114.3 | × |
| | G115 | × (P481) |
| | G116 | × (P481) |
| | G117 | × (P481) |
| | G122 | ○ |
| | G125 | ○ (*1) |
| | G126 | × (*2) |

| Group | G code (G code list: 3) | Availability |
|---|---|---|
| 0 | G140 | × (P501) |
| | G141 | × (P501) |
| | G142 | × (P501) |
| | G144 | ○ |
| | G145 | ○ |
| | G156 | × (*2) |
| 1 | G00 | ○ |
| | G01 | ○ |
| | G02 | ○ (*3) |
| | G03 | ○ (*3) |
| | G2.3 | × (P481) |
| | G3.3 | × (P481) |
| | G33 | × (P481) |
| | G34 | × (P481) |
| | G35 | × (P481) |
| | G36 | × (P481) |
| 2 | G16 | ○ |
| | G17 | ○ |
| | G18 | ○ |
| | G19 | ○ |
| 3 | G90 | ○ |
| | G91 | ○ |
| 4 | G22 | ○ |
| | G23 | ○ |
| 5 | G94 | ○ |
| | G95 | × (P481) |
| 6 | G20 | × (P481) |
| | G21 | × (P481) |
| 7 | G40 | ○ |
| | G41 | ○ |
| | G42 | ○ |
| | G46 | × (P481) |
| 9 | G70 | × (P204/P481) |
| | G71 | × (P481) |
| | G72 | × (P481) |
| | G73 | × (P481) |
| | G74 | × (P481) |
| | G75 | × (P481) |
| | G76 | × (P481) |
| | G76.1 | × (P210) |
| | G76.2 | × (P210) |
| | G83.2 | ○ |
| | G80 | ○ |
| | G81 | ○ |
| | G82 | ○ |
| | G83 | ○ |
| | G83.1 | ○ |
| | G84 | ○ |
| | G84.1/G84.2 | ○ |
| | G85 | ○ |

| Group | G code (G code list: 3) | Availability |
|---|---|---|
| 9 | G87 | ○ |
| | G88 | ○ |
| | G88.1 | ○ |
| | G89 | ○ |
| | G77 | × (P481) |
| | G78 | × (P481) |
| | G79 | × (P481) |
| 10 | G98 | ○ |
| | G99 | ○ |
| 12 | G54 | × (P481) |
| | G55 | × (P481) |
| | G56 | × (P481) |
| | G57 | × (P481) |
| | G58 | × (P481) |
| | G59 | × (P481) |
| | G54.1 | × (P481) |
| 13 | G61 | ○ |
| | G61.1 | ○ (*4) |
| 13/19 | G62 | × (P481) |
| | G63 | × (P481) |
| | G64 | ○ |
| 14 | G66 | ○ |
| | G66.1 | ○ |
| | G67 | ○ |
| 15 | G68 | × (P481) |
| | G69 | × (P481) |
| | - (G68(*)) | × (P481) |
| | - (G69(*)) | × (P481) |
| 16 | G68.1 | × (P481) |
| | G69.1 | × (P481) |
| 17 | G96 | × (P481) |
| | G97 | ○ |
| 18 | G14 | × (P481) |
| | G15 | × (P481) |
| 19 | - (G07.1/G107(*)) | Δ (*5) |
| | - (G12.1/G112(*)) | × (P481) |
| | - (G13.1/G113(*)) | × (P481) |
| 20 | G43.1 | × (P34) |
| | G44.1 | × (P34) |
| | G47.1 | × (P34) |
| 24 | G188 | × (P29) |
| | G189 | × (P29) |

(*) Only applies to G code lists 6 and 7

(*1) Only the command for the reference axis is available.

(*2) The operation error (M01 1004) will occur.

(*3) The R specification is possible.

(*4) To enable the G08P1 or G61.1 (high-accuracy control) mode during the G07.1 (cylindrical interpolation) or G12.1 (polar coordinate interpolation) mode or to enable the G07.1 (cylindrical interpolation) or G12.1 (polar coordinate interpolation) mode during the G08P1 or G61.1 (high-accuracy control) mode, you need to enable the axis-specific acceleration tolerance control (optimum acceleration control). (The validity of these functions depends on the MTB specifications.)
If the cylindrical interpolation or polar coordinate interpolation command is issued during the high-accuracy control mode while the functions above are invalid, a program error (P126) will occur.
Also, if the high-accuracy control command is issued during the cylindrical interpolation or polar coordinate interpolation mode, a program error (P481) will occur.

(*5) Only the cylindrical interpolation mode cancel command is available. If the cylindrical interpolation command is re-issued, a program error (P481) will occur.

### Restrictions and precautions

(1) The cylindrical interpolation mode is canceled when the power is turned ON or reset.

(2) Program cannot be restarted (program restart) when the block is in the cylindrical interpolation.

(3) The cylindrical interpolation command cannot be issued in mirror image (parameter/external input ON). If the command is issued, a program error (P486) will occur.

(4) A program error (P481) will occur if the cylindrical interpolation command (G07.1), the polar coordinate interpolation command (G12.1), or the milling interpolation command (G12.1) is issued again during the cylindrical interpolation mode.

# 6.10 Polar Coordinate Interpolation; G12.1, G13.1/G112, G113 (Only 6 and 7 in G Code List)

## Function and purpose

This function converts the commands programmed with the orthogonal coordinate axis into linear axis movement (tool movement) and rotary axis movement (workpiece rotation), and controls the contour.
The plane that uses the linear axis as the plane's 1st orthogonal axis, and the intersecting hypothetical axis as the plane's 2nd axis (hereafter "polar coordinate interpolation plane") is selected. Polar coordinate interpolation is carried out on this plane. The workpiece coordinate system zero point is used as the coordinate system zero point during polar coordinate interpolation.

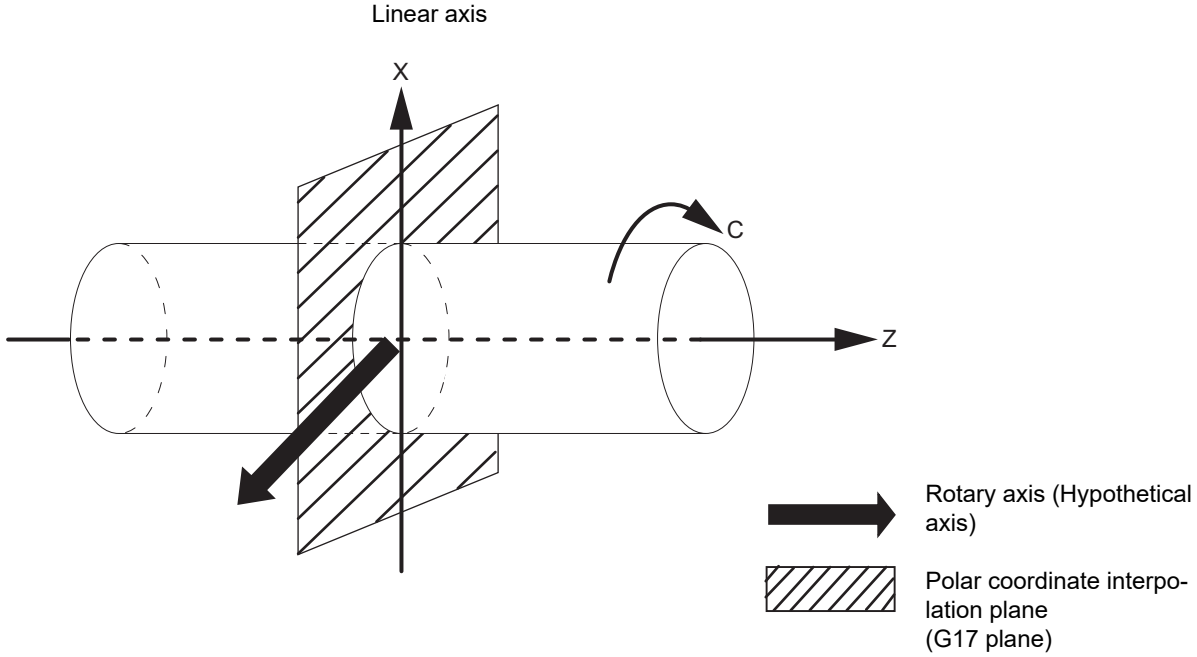


This is effective for cutting a notch in a linear line to the external diameter of the workpiece, for cutting cam shafts, etc.

## Command format

**Polar coordinate interpolation mode start**

```
G12.1 ;
```

**Polar coordinate interpolation mode cancel**

```
G13.1 ;
```

## Detailed description

(1) The coordinate commands in the interval from the start to cancellation of the polar coordinate interpolation mode will be polar coordinate interpolation.

| | |
|---|---|
| G12.1 ; | Polar coordinate interpolation mode start<br>(Polar coordinate interpolation starts.) |
| : | (The coordinate commands in this interval will be the polar coordinate interpolation.) |
| G13.1 ; | Polar coordinate interpolation mode cancel<br>(Polar coordinate interpolation is canceled.) |

(2) G112 and G113 can be used instead of G12.1 and G13.1.

(3) G12.1 must be commanded alone in a block, which also applies to G13.1. If it is commanded in the same block with other G code, the program error (P33) occurs.

(4) Linear interpolation or circular interpolation can be commanded during the polar coordinate interpolation mode.

(5) Both absolute command and incremental command can be specified for the coordinate command.

(6) Tool radius compensation can be applied on the program command. Polar coordinate interpolation is executed to the path after it has gone through a tool radius compensation.

(7) For the feedrate, command the tangent speed in the polar coordinate interpolation plane (orthogonal coordinate system) by F. F is in mm/min or inch/min unit.

(8) When the G12.1/G13.1 command is issued, the deceleration check is executed.

### Plane selection

The linear axis and rotary axis used for polar coordinate interpolation depend on the MTB specifications (parameter #1533).

(1) The deemed plane to perform polar interpolation is determined by the parameter (#1533) of the linear axis used for polar interpolation.

| #1533 setting value | Deemed plane |
|---|---|
| X | G17 (XY plane) |
| Y | G19 (YZ plane) |
| Z | G18 (ZX plane) |
| Blank (no setting) | G17 (XY plane) |

(2) The program error (P485) occurs if the plane selection command (G17 to G19) is issued during the polar coordinate interpolation mode.

<Note>

- Depending on the model or version, the parameter (#1533) may not be provided. In this case, the operation is the same as when the parameter (#1533) is blank (no setting).

### Related parameter

#1516 mill_ax (Milling axis name)

#1517 mill_c (Milling interpolation hypothetical axis name)

#8111 (Milling Radius)

### Program example

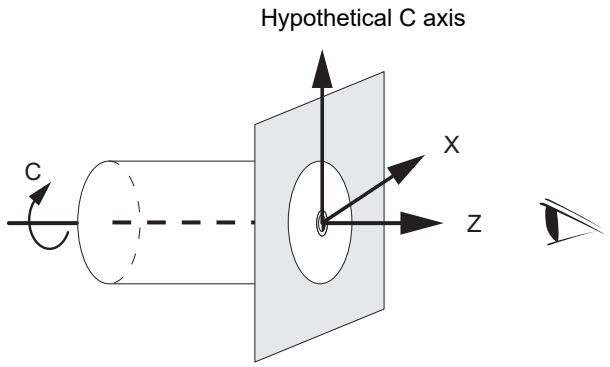


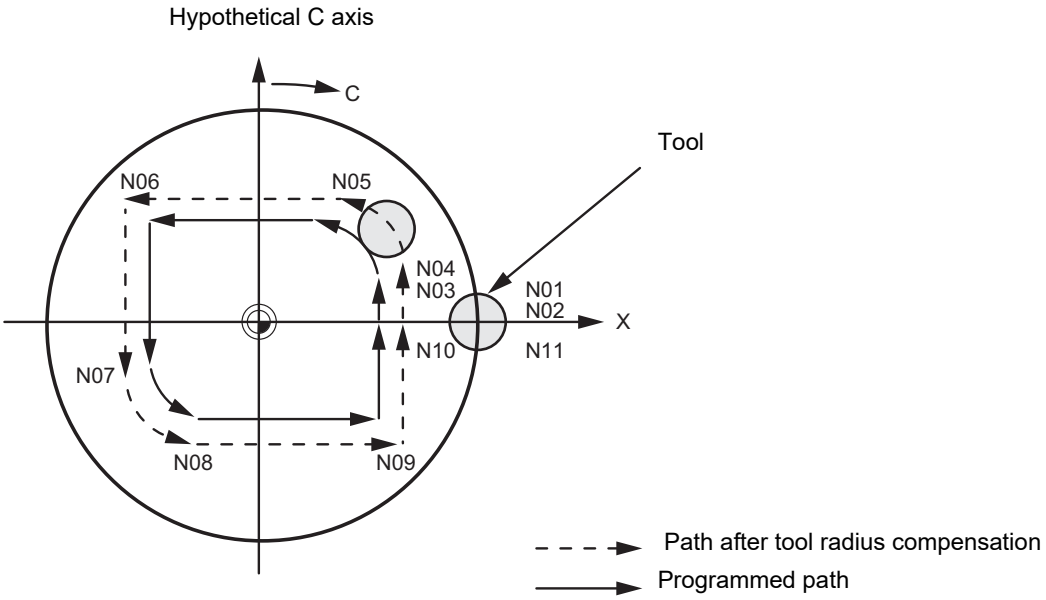


```
<Program>
  :
T0101;
  :
N01 G17 G90 G00 X40.0 C0 Z0;        Setting of start position
N02 G12.1;                          Polar coordinate interpolation mode: Start
N03 G01 G42 X20.0 F2000;            Actual machining start
N04 C10.0;
N05 G03 X10.0 C20.0 R10.0;
N06 G01 X-20.0;                     Shape program
N07 C-10.0;
N08 G03 X-10.0 C-20.0 I10.0 J0;     (Depends on orthogonal coordinate positions on X-C hypothetical axis
                                    plane.)
N09 G01 X20.0;
N10 C0;
N11 G40 X40.0;
N12 G13.1;                          Polar coordinate interpolation mode: Cancel
  :
 M30 ;
```

## Relationship with other functions

### Program commands during polar coordinate interpolation

(1) The program commands in the polar coordinate interpolation mode are issued by the orthogonal coordinate value of the linear axis and rotary axis (hypothetical axis) on the polar coordinate interpolation plane.
The axis address of the rotary axis (C) is specified as the axis address for the plane's 2nd axis (hypothetical axis) command.
The command unit is not deg (degree). Issue the command with the unit (mm or inch) that is the same as the unit of the plane's 1st axis (linear axis) address.

(2) The hypothetical axis coordinate value at the time G12.1 is commanded is "0". In other words, the position where G12.1 is commanded is interpreted as an angle of "0" degree, and the polar coordinate interpolation is started.

### Circular interpolation on polar coordinate plane

The arc radius address for carrying out circular interpolation during the polar coordinate interpolation mode is determined with the linear axis parameter (#1533).

| #1533 setting value | Center designation command |
|---|---|
| X | I, J (polar coordinate plane is interpreted as XY plane) |
| Y | J, K (polar coordinate plane is interpreted as YZ plane) |
| Z | K, I (polar coordinate plane is interpreted as ZX plane) |
| Blank (no setting) | I, J (polar coordinate plane is interpreted as XY plane) |

The arc radius can also be designated with the R command.

**Note**

(1) Depending on the model or version, the parameter (#1533) may not be provided. In this case, the operation is the same as when the parameter (#1533) is blank (no setting).

### Tool radius compensation

The tool radius can be compensated during the polar interpolation mode.

(1) Command the plane selection in the same manner as polar coordinate interpolation.
To conduct tool radius compensation, it must be started up and canceled during the polar coordinate interpolation mode.

(2) The program error (P485) occurs if polar coordinate interpolation is executed during tool radius compensation.

(3) If the G12.1 or G13.1 command is issued with no movement command after the tool radius compensation is canceled, the position of the axis in the G12.1 or G13.1 command block is interpreted as the position after the tool radius compensation is canceled and the subsequent operations are performed.

### Cutting asynchronous feed

(1) The asynchronous mode is forcibly set when the polar coordinate interpolation mode is started.

(2) When the polar coordinate interpolation mode is canceled, the synchronous mode returns to the state before the polar coordinate interpolation mode was started.

(3) The program error (P485) occurs if G12.1 is commanded in the constant surface speed control mode (G96).

### Miscellaneous functions

(1) The miscellaneous function (M) and 2nd miscellaneous function can be issued in the polar coordinate interpolation mode.

(2) The S command in the polar coordinate interpolation mode specifies the rotary tool's rotation speed instead of the spindle rotation speed.

(3) Issue the T command before starting polar coordinate interpolation. The program error (P485) occurs if T command is issued in the polar coordinate interpolation mode.

```
  :
T1212 ;              T command before polar coordinate interpolation -> Valid
G00 X100. Z0. ;
G12.1 ;
  :
T1200 ;              T command in polar coordinate interpolation mode -> Program error
  :
G13.1 ;
```

(4) Complete the tool compensation operation (movement of tool length and wear compensation amount) before executing the polar coordinate interpolation.
If the tool compensation operation is not completed when the polar coordinate interpolation start command has been issued, the operations are as follows:

- Machine coordinate does not change even if G12.1 is executed.
- When G12.1 is executed, the workpiece coordinate changes to that of the post tool length compensation. (Even if polar coordinate interpolation is canceled, this workpiece coordinate is not canceled.)

### Feed mode and F command before and after polar coordinate interpolation mode

Operations vary depending on whether the synchronous feed during polar coordinate interpolation is valid or invalid. Whether the synchronous feed is valid or invalid depends on the MTB specifications (parameter "#1293 ext29/bit0").

(1) When the synchronous feed is invalid ("#1293 ext29/bit0" is set to "0"):

Only the asynchronous feed is valid during the polar coordinate interpolation mode.
If synchronous feed (G95) is commanded during polar coordinate interpolation, the program error (P481) occurs.
The operation when the polar coordinate interpolation mode is started or canceled varies depending on the feed mode that is active before the polar coordinate interpolation mode is started.

(a) If the feed mode before start is the asynchronous feed (G94)

The previous feed mode (asynchronous feed) and F command feedrate are used when the polar coordinate interpolation mode is started or canceled.

(b) If the feed mode before start is the synchronous feed (G95)

The asynchronous feed is forcibly set and the feedrate is canceled when the polar coordinate interpolation mode is started.
Set the feedrate with an F command after the polar coordinate interpolation mode is started. The program error (P62) occurs if the F command is not designated.
When the polar coordinate interpolation mode is canceled, the feed mode (synchronous feed) and feedrate before polar coordinate interpolation start are restored.

(2) When the synchronous feed is valid ("#1293 ext29/bit0" is set to "1"):

Both the synchronous and asynchronous feed are valid during the polar coordinate interpolation mode.
The feed mode and feedrate remain unchanged and take over the previous state when the polar coordinate interpolation mode is started or canceled.

Changes in the feed mode before and after polar coordinate interpolation mode

| #1293 ext29/bit0 | Changes in feed mode and feedrate | | |
|---|---|---|---|
| | Before start | At start | At cancel |
| 0 | Asynchronous feed | Asynchronous feed<br>Feedrate just before start | Asynchronous feed<br>Feedrate just before cancel |
| | Synchronous feed | Asynchronous feed<br>Feedrate is "0" (cancel) | Synchronous feed<br>Feedrate before the polar coordinate interpolation is started |
| 1 | Asynchronous feed | Asynchronous feed<br>Feedrate just before start | Feed mode just before cancel<br>Feedrate just before cancel |
| | Synchronous feed | Synchronous feed<br>Feedrate just before start | |

### Hole drilling axis in the fixed cycle for drilling command

Hole drilling axis in the fixed cycle for drilling command during the polar coordinate interpolation is determined with the linear axis parameter (#1533).

| #1533 setting value | Hole drilling axis |
|---|---|
| X | Z (polar coordinate plane is interpreted as XY plane) |
| Y | X (polar coordinate plane is interpreted as YZ plane) |
| Z | Y (polar coordinate plane is interpreted as ZX plane) |
| Blank (no setting) | Z (polar coordinate plane is interpreted as XY plane) |

### Operation switching for circular interpolation in the center of a workpiece

In circular interpolation that passes through the center of the workpiece, a large movement occurs on the C axis when the axis passes through the center of the workpiece. By using the parameter "#19104 G12.1 no reversal", you can switch whether the rotation direction of the C axis at that time to be a short rotation or the previous rotation direction to be maintained. Set "0" to make a short turn, and set "1" to maintain the rotation direction up to that point. The parameter "#19104 G12.1 no reversal" can be switched only for the movement of the timing when the axis passes through the center of the workpiece. Specify the range to be judged as the center of the workpiece using the parameter "#19105 G12.1 zero range".
If one axis on the polar coordinate plane crosses the quadrant and the other axis is within the range of the parameter "#19105 G12.1 zero range", it is assumed that the axis have passed through the center of the workpiece.
The rotation direction of the C axis that is used immediately before the position of the axis on the polar coordinate plane enters the range specified with the parameter "#19105 G12.1 zero range" is set as the rotation direction of the C axis used when the quadrant is switched.

[Timing to acquire the rotation direction of the C axis used when the quadrant is switched]

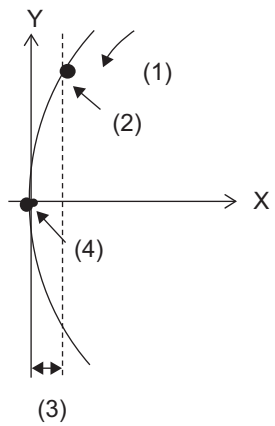


(1) Circular command direction
(2) Timing to acquire the movement direction of the C axis
(3) Range specified with the parameter #19105
(4) Timing at which the C axis rotates in the same direction as (2)
(When the parameter #19104 is set to "1")

When the parameter #19104 is set to "1", adjust the setting value of the parameter #19105.
The movement of the C axis becomes unstable near the center of the workpiece; therefore, set the parameter #19105 to a value larger than "0.0". Execute the machining program including the target circular interpolation and check the rotation direction of the C axis at the center of the workpiece. If there is no problem, the setting is completed.
If the rotation direction of the C axis that passes through the center of the workpiece is not improved, change the setting value of the parameter #19105 to a larger value.

#### Note

(1) If the arc does not pass through the center of the workpiece, the direction does not change suddenly when the quadrant is switched, so set the parameter #19104 to "0".
(2) In the case of an arc of which the start point is near the center of rotation (the start point is within the range specified with the parameter #19105), the rotation direction of the C axis used at the time of quadrant switching is shortcut regardless of the setting of the parameter #19104. Therefore, set the start point of the arc away from the center of the workpiece (outside the range specified with the parameter #19105).

## Restrictions and precautions

(1) The following G code commands can be used during the polar coordinate interpolation mode.

| G Code | Details |
|---|---|
| G00 | Positioning |
| G01 | Linear interpolation |
| G02 | Circular interpolation (CW) |
| G03 | Circular interpolation (CCW) |
| G04 | Dwell |
| G09 | Exact stop check |
| G22/23 | Chuck barrier ON/OFF |
| G40-42 | Tool radius compensation |
| G61 | Exact stop mode |
| G64 | Cutting mode |
| G65 | Macro call (simple call) |
| G66 | Macro modal call (modal call) |
| G66.1 | Macro modal call (block call per macro) |
| G67 | Macro modal call cancel (modal call cancel) |
| G80-89 | Fixed cycle for drilling |
| G90/91 | Absolute command/Incremental command |
| G94 | Asynchronous feed |
| G98 | Hole drilling cycle initial return |
| G99 | Hole drilling cycle R point return |

The program error (P481) may occur if a G code other than those listed above is commanded during polar coordinate interpolation.

(2) Program cannot be restarted (program restart) when the block is in the polar coordinate interpolation.

(3) Before commanding polar coordinate interpolation, set the workpiece coordinate system so that the center of the rotary axis is at the coordinate system zero point. Do not change the coordinate system during the polar coordinate interpolation mode. (G50, G52, G53, relative coordinate reset, G54 to G59, etc.)

(4) The feedrate during polar coordinate interpolation is the interpolation speed on the polar coordinate interpolation plane (orthogonal coordinate system).
(The relative speed with the tool varies according to the polar coordinate conversion.)
When passing near the center of the rotary axis on the polar coordinate interpolation plane (orthogonal coordinate system), the rotary axis side feedrate after polar coordinate interpolation becomes very high.

(5) The axis movement command outside of the plane during polar coordinate interpolation makes axis movement independently of the polar coordinate interpolation.

(6) The current position counters during polar coordinate interpolation all indicate the actual coordinate value. However, the "remaining movement amount" indicates the movement amount on the polar coordinate input plane.

(7) The polar coordinate interpolation mode is canceled when the power is turned ON or reset.

(8) The program error (P484) occurs if any of the axes commanded during polar coordinate interpolation has not completed the reference position return.

(9) Tool radius compensation must be canceled before canceling the polar coordinate interpolation mode.

(10) When the polar coordinate interpolation mode is canceled and switched to the turning mode, the plane selected before polar coordinate interpolation is returned.

(11) The program error (P486) occurs if the polar coordinate interpolation command is issued during the mirror image.

(12) The program error (P481) occurs if the cylindrical interpolation or the polar coordinate interpolation is commanded during the polar coordinate interpolation mode.

# 6.11 Exponential Interpolation; G02.3, G03.3

## Function and purpose

Exponential function interpolation changes the rotary axis into an exponential function shape in respect to the linear axis movement.
At this time, the other axes carry out linear interpolation between the linear axis.
This allows a machining of a taper groove with constant torsion angle (helix angle) (uniform helix machining of taper shape).
This function can be used for slotting or grinding a tool for use in an end mill, etc.

♦Uniform helix machining of taper shape

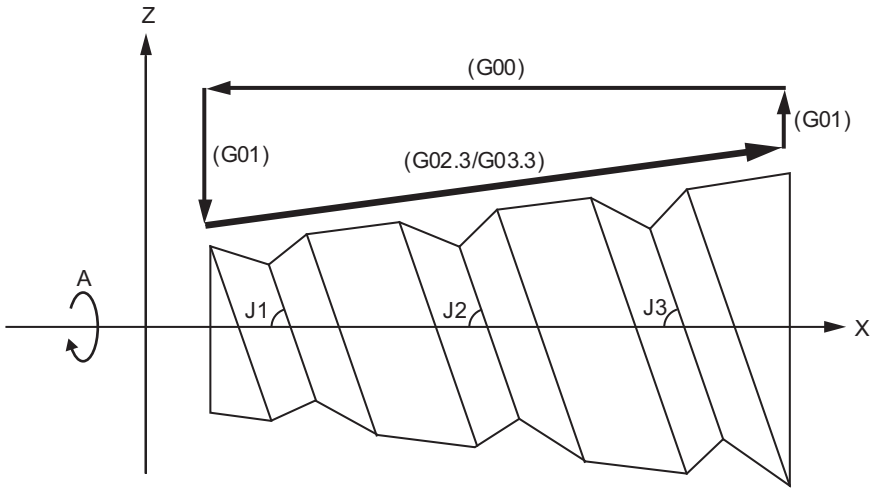


A: A axis (rotation axis)
X: X axis (linear axis)

**Torsion angle: J1 = J2 = J3**

♦Relation of linear axis and rotary axis

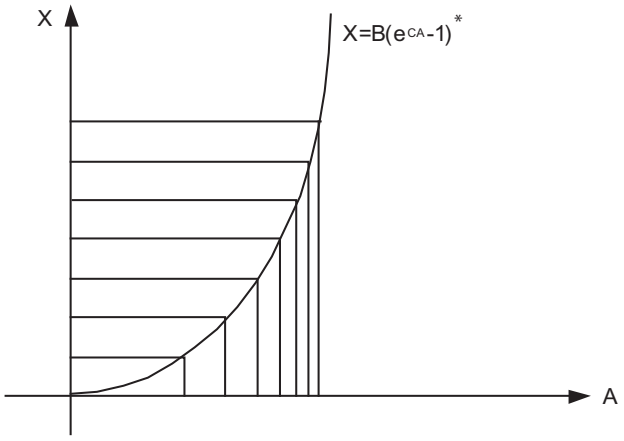


A: A axis (rotation axis)
X: X axis (linear axis)
* : {B, C... constant}

## Command format

### Forward rotation interpolation

```
G02.3 Xx1 Yy1 Zz1 Ii1 Jj1 Rr1 Ff1 Qq1 ;
```

### Negative rotation interpolation

```
G03.3 Xx1 Yy1 Zz1 Ii1 Jj1 Rr1 Ff1 Qq1 ;
```

| | |
|---|---|
| X | X axis end point (*1) |
| Y | Y axis end point (*1) |
| Z | Z axis end point (*1) |
| I | Angle i1 (*2) |
| J | Angle j1 (*2) |
| R | Constant value r1 (*3) |
| F | Initial feedrate (*4) |
| Q | Feedrate at end point (*5) |

(*1) Designate the end point of the linear axis specified by parameter "#1514 expLinax" and the axis that carries out linear interpolation between that axis.
If the end point on of the rotary axis designated with parameter "#1515 expRotax" is specified, linear interpolation without exponential function interpolation will take place. These parameter settings depend on the MTB specifications.

(*2) The command unit is as follows.

| Setting unit | #1003=B | #1003=C | #1003=D | #1003=E |
|---|---|---|---|---|
| (Unit = °) | 0.001 | 0.0001 | 0.00001 | 0.000001 |

The command range is -89 to +89°.
A program error (P33) will occur if there is no address I or J command.
A program error (P35) will occur if the address I or J command value is 0.

(*3) The command unit is as follows.

| Setting unit | #1003=B | #1003=C | #1003=D | #1003=E | Unit |
|---|---|---|---|---|---|
| Millimeter system | 0.001 | 0.0001 | 0.00001 | 0.000001 | mm |
| Inch system | 0.0001 | 0.00001 | 0.000001 | 0.0000001 | inch |

The command range is a positive value that does not include 0.
A program error (P33) will occur if there is no address R command.
A program error (P35) will occur if the address R command value is 0.

(*4) The command unit and command range is the same as the normal F code. (Command as per minute feed.)
Command the composite feedrate that includes the rotary axis.
The normal F modal value will not change by the address F command.
A program error (P33) will occur if there is no address F command.
A program error (P35) will occur if the address F command value is 0.

(*5) The command unit is as follows.

| Setting unit | #1003=B | #1003=C | #1003=D | #1003=E | Unit |
|---|---|---|---|---|---|
| Millimeter system | 0.001 | 0.0001 | 0.00001 | 0.000001 | mm |
| Inch system | 0.0001 | 0.00001 | 0.000001 | 0.0000001 | inch |

The command unit and command range is the same as the normal F code.
Command the composite feedrate that includes the rotary axis.
The normal F modal value will not change by the address Q command.
The axis will interpolate between the initial speed (F) and end speed (Q) in the CNC according to the linear axis.
If there is no address Q command, interpolation will take place with the same value as the initial feedrate (address F command). (The start point and end point feedrates will be the same.)
A program error (P35) will occur if the address Q command value is 0.

[Example of uniform helix machining of taper shape]

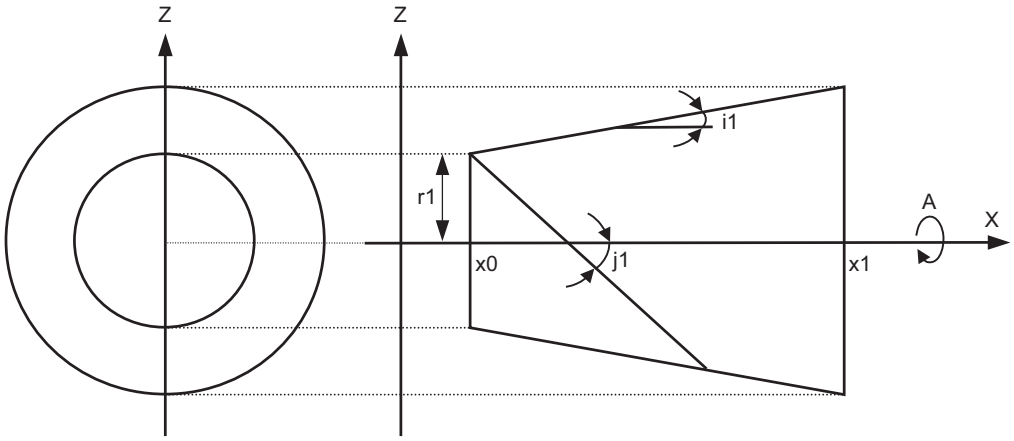


X : X axis (linear axis)　　A : A axis (rotation axis)　　x0 : linear axis (X axis) start point

## Detailed description

### Relational expression of exponential function

The exponential function relational expression of the linear axis (X) and rotary axis (A) in the G02.3/G03.3 command is defined in the following manner.

$X(\theta) = r1 * (e^{\theta/D} - 1) / \tan(i1)$　　Linear axis (X) movement (1)

$A(\theta) = (-1)^{\omega} * 360 * \theta / (2\pi)$　　Rotary axis (A) movement

where, "D" is as follows.
$D = \tan(j1) / \tan(i1)$
During forward rotation (G02.3): $\omega = 0$
During backward rotation (G03.3): $\omega = 1$
$\theta$ is the rotation angle (radian) from the rotary axis' start point. The rotary axis' rotation angle ($\theta$) is as follows according to expression (1).
$\theta = D * 1n\{(X * \tan(i1) / r1) + 1\}$

## Machining example

[Uniform helix machining of taper shape]

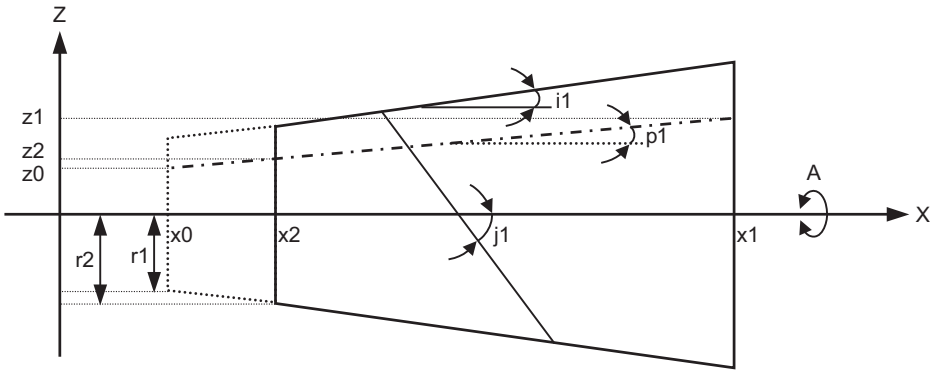


<Relational expression of exponential function in machining example>

$Z(\theta) = r1 *(e^{\theta/D}-1)* \tan(p1) / \tan(i1) + z0$ (1)

$X(\theta) = r1 *(e^{\theta/D}-1)/ \tan(i1)$ (2)

$A(\theta) = (-1)^{\omega} * 360 * \theta / (2\pi)$

where, "D" is as follows.

$D = \tan(j1) / \tan(i1)$

| | |
|---|---|
| Z(θ) | Absolute position from zero point of Z axis (axis that linearly interpolates with linear axis (X axis)) |
| X(θ) | Absolute position from X axis (linear axis) start point |
| A(θ) | Absolute position from A axis (rotary axis) start point |
| r1 | Exponential function interpolation constant value (address R command) |
| r2 | Workpiece left edge radius |
| x2 | X axis (linear axis) position at the left edge of the workpiece |
| x1 | X axis (linear axis) end point (address X command) |
| x0 | X axis (linear axis) start point (Set as "x0 ≤ x1" so that workpiece does not interfere with the tool) |
| z1 | End point of Z axis (axis that linearly interpolates between interval with linear axis (X axis)) (address Z command) |
| z0 | Start point of Z axis (axis that linearly interpolates between interval with linear axis (X axis)) |
| i1 | Taper gradient angle (address I command) |
| p1 | Slot base gradient angle |
| j1 | Torsion angle (helix angle) (address J command) |
| ω | Torsion direction (0: Forward rotation, 1: reverse direction) |
| θ | Workpiece rotation angle (radian) |
| f1 | Initial feedrate (address F command) |
| q1 | Feedrate at end point (address Q command) |
| k1 | Insignificant data (address K command) |

According to expressions (1) and (2), expression (3) is obtained.

$Z(\theta) = X(\theta) * \tan(p1) + z0$ ...(3)

According to expression (3), the slot base gradient angle (p1) is set from the X axis and Z axis end point positions (x1, z1).

The Z axis movement amount is determined by the slot base gradient angle (p1) and X axis position.

In the above diagram, the exponential function interpolation's constant value (r1) is determined with the following expression using the workpiece left edge radius (r2), X axis start point (x0), X axis position at workpiece left edge (x2) and taper gradient angle (i1).

$r1 = r2 -\{(x2 - x0) * \tan(i1)\}$

The taper gradient angle (i1) and torsion angle (j1) are set by the command address I and J, respectively.

Note that if the shape is a reverse taper shape, the taper gradient angle (i1) is issued as a negative value.

The torsion direction (ω) is changed by the G code. (Forward rotation when G02.3 is commanded, negative rotation when G03.3 is commanded)

The above settings allow uniform helix machining of a taper shape (or reverse taper shape).

## Command and operation

(1) G2.3 (equivalent to G3.3 if j1 < 0)

In the conditional figure below, the upper side shows a command, and the lower side shows an operation.

| X movement direction > 0 | | X movement direction < 0 | |
|---|---|---|---|
| **i1 > 0** | **i1 < 0** | **i1 > 0** | **i1 < 0** |
| 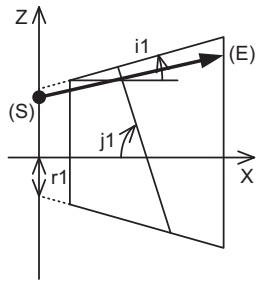  | 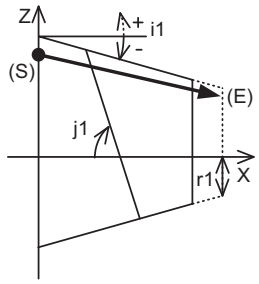  | 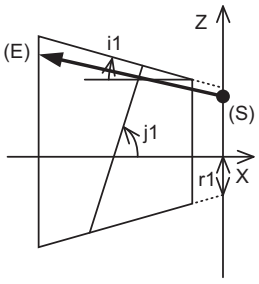  | 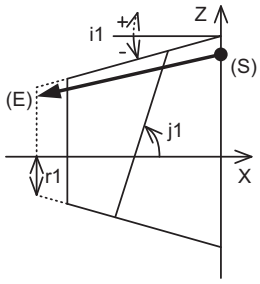  |
| 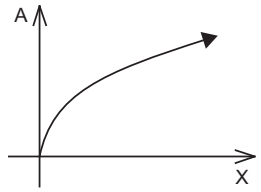  | 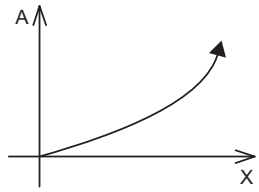  | 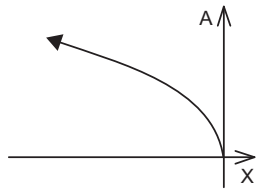  | 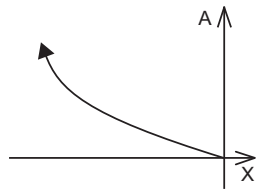  |
| N10 G28XYZC;<br>N20 G91G0 X100. Z100.;<br>N30 G2.3 X100. Z100. I50. J80. R105. F500.;<br>N40 M30; | N10 G28XYZC;<br>N20 G91G0 X100. Z200.;<br>N30 G2.3 X100. Z-100. I-50. J80. R105. F500.;<br>N40 M30; | N10 G28XYZC;<br>N20 G91G0 X-100. Z100.;<br>N30 G2.3 X-100. Z100. I50. J80. R105. F500.;<br>N40 M30; | N10 G28XYZC;<br>N20 G91G0 X-100. Z200.;<br>N30 G2.3 X-100. Z-100. I-50. J80. R105. F500.;<br>N40 M30; |

(S) Start point, (E) End point

(2) G3.3 (equivalent to G2.3 if j1 < 0)

In the conditional figure below, the upper side shows a command, and the lower side shows an operation.

| X movement direction > 0 | | X movement direction < 0 | |
|---|---|---|---|
| **i1 > 0** | **i1 < 0** | **i1 > 0** | **i1 < 0** |
| 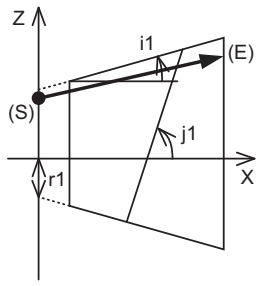  | 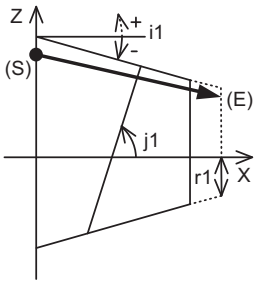  | 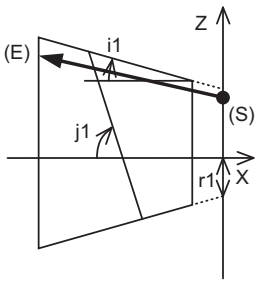  | 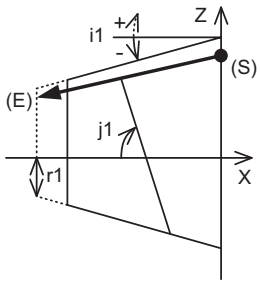  |
| 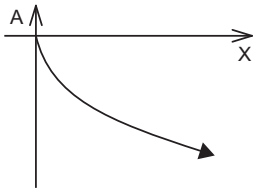  | 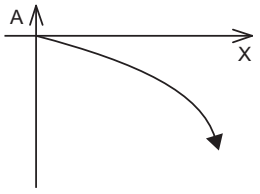  | 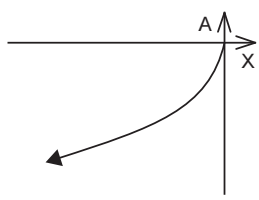  | 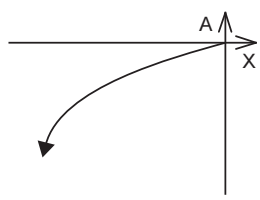  |
| N10 G28XYZC;<br>N20 G91G0 X100. Z100.;<br>N30 G3.3 X100. Z100. I50. J80. R105. F500.;<br>N40 M30; | N10 G28XYZC;<br>N20 G91G0 X100. Z200.;<br>N30 G3.3 X100. Z-100. I-50. J80. R105. F500.;<br>N40 M30; | N10 G28XYZC;<br>N20 G91G0 X-100. Z100.;<br>N30 G3.3 X-100. Z100. I50. J80. R105. F500.;<br>N40 M30; | N10 G28XYZC;<br>N20 G91G0 X-100. Z200.;<br>N30 G3.3 X-100. Z-100. I-50. J80. R105. F500.;<br>N40 M30; |

(S) Start point, (E) End point

## Precautions

(1) When G02.3/G03.3 is commanded, interpolation takes place with the exponential function relational expression using the start position of the linear axis and rotary axis as 0.

(2) Linear interpolation will take place in the following cases, even if in the G02.3/G03.3 mode.
The feedrate for linear interpolation will be the F command in that block. (Note that the normal F modal is not updated.)

- The linear axis designated with the parameter (#1514 expLinax) is not commanded, or the movement amount for that axis is 0.
- The rotary axis designated with the parameter (#1515 expRotax) is commanded.

(3) Tool length offset and nose R compensation cannot be used during the G02.3/G03.3 mode. Note that the tool length offset which started interpolation before the G02.3/G03.3 mode will normally continue.

(4) A program error (P481) will occur if commands are issued during the pole coordinate interpolation, cylindrical interpolation or milling interpolation modes.

(5) Program error (P612) will occur if commands are issued during the mirror image.

(6) G02.3/G03.3 will function with feed per minute even during the feed per revolution mode.

(7) If the parameter "#1515 expRota" setting is the same axis name as the initial C axis, the axis selected with the C axis selection signal will interpolate as the rotary axis.

# 7

# Feed Functions

# 7.1 Rapid Traverse Rate

## 7.1.1 Rapid Traverse Rate

### Function and purpose

The rapid traverse rate can be set independently for each axis. The available speed ranges are from 1 mm/min to 10000000 mm/min. The upper limit is subject to the restrictions limited by the machine specifications. Refer to the specifications manual of the machine for the rapid traverse rate settings. Two paths are available for positioning: the interpolation type where the area from the start point to the end point is linearly interpolated, or the non-interpolation type where movement proceeds at the maximum speed of each axis. The type of interpolation that is used depends on the MTB specifications (parameter "#1086 G0Intp"). The positioning time is the same for each type.

If the high-accuracy control mode's rapid traverse rate is set, the axis will move at that federate during high-accuracy control, high-speed high-accuracy control I/II, or SSS control.

- If the value set for the high-accuracy control mode rapid traverse rate is 0, the axis will move at the rapid traverse rate
- The high-accuracy control mode rapid traverse rate can be set independently for each axis.
- The high-accuracy control mode rapid traverse rate is effective for the G00, G27, G28, G29, G30 and G60 commands.
- Override can be applied on the high-accuracy control mode rapid traverse rate using the PLC signal supplied. (The operation of the PLC signal depends on the MTB specifications.)

**Note**

(1) Rapid traverse override
Override can be applied by a PLC input signal for both manual and automatic rapid traverse. There are 2 types which are determined by the PLC specifications.
Type1 : Override in 4 steps (1%, 25%, 50% and 100%).
Type2 : Override in 1% steps from 0% to 100%.

## 7.1.2 G00 Feedrate Command (,F Command)

### Function and purpose

Use this function to specify G00 (positioning command) and an axis feedrate in G00 mode.
The speed of tool exchange, axis movement of gantry, etc. can be specified with the machining program so that the mechanical vibration can be suppressed.
Operations other than the feedrate follows the G00 specification.

### Command format

**Rapid traverse at a feedrate specified with the ",F" command**

```
G00 X_ Z_ (Y_)   ,F1000;
```

| | |
|---|---|
| ,F | Specifies the rapid traverse rates for G00, movement in G00 mode and the movement during the fixed cycle for drilling.<br>The range is equal to the range of the feed per minute F command (mm/min, inch/min) in the G01 mode.<br>Switching inch/mm is invalid for rotary axes. |

### Detailed description

(1) ",F" command is in effect only in the block in which it is commanded.

(2) If ",F" is commanded in G00, G27 to G30, G60, G00 mode, a block other than the one that specifies the movement to the initial point of the hole position for the drilling cycle or a block that does not contain a movement command (axis address command), ",F" is ignored.

(3) ",F" command in the feed per revolution (G95) mode will also be considered a feed per minute feedrate.

(4) The motion of the ",F" command varies depending on the status of parameter "#1086 G0Intp".

| "#1086 G0Intp" | Handling of ",F"command |
|---|---|
| OFF (see figure shown at below left) | Handled as an interpolation speed. |
| ON (see figure shown at below right) | Handled as a commanded speed for each axis. |

Feedrates when commanding G00 X200. Z300. ,F1000

**When "G0 non-interpolation" is OFF**

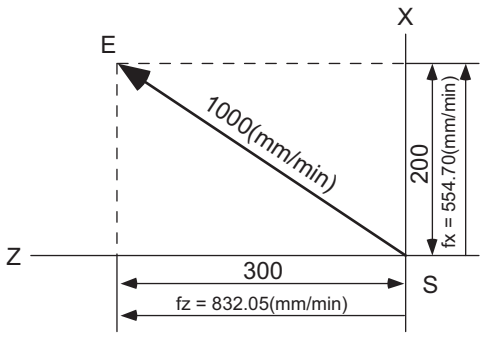


**When "G0 non-interpolation" is ON**

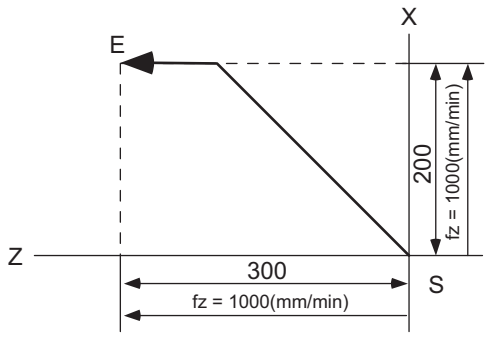


fx: Actual X axis rate

fz: Actual Z axis rate

(5) When the ",F" command has not been issued, the rapid traverse rate set by the axis specification parameter will be valid. (*1)

(6) The ",F" command is clamped by the rapid traverse rate set by the axis specification parameter. (*1)

Feedrate clamping depends on the setting of parameter "#1086 G0Intp".

| "#1086 G0Intp" | Speed clamp |
|---|---|
| OFF | If it is found that, after converting ",F" command value (interpolation speed) into a speed for each axis, there is an axis for which the programmed feedrate exceeds the rapid traverse rate parameter, the interpolation speed is calculated so that it does not exceed the rapid traverse rate. (*1) |
| ON | An axis whose ",F" command value (per axis speed) exceeds the rapid traverse rate parameter is clamped to a speed specified by the parameter. (*1)<br>For an axis that does not exceed the rapid traverse rate parameter, the commanded speed is applied. |

(*1) The rapid traverse rate parameter depends on the MTB specifications.

Typically, parameter "#2001 rapid" is selected. For axes related to control and arbitrary axis superimposition control, one of the following rates is selected depending on the direction and mode in which a superimposition related axis moves.

- Rapid traverse rate (#2001 rapid)
- Rapid traverse rate during the superimposition control (#2090 plrapid)
- Rapid traverse rate 2 during the superimposition control (#2621 plrapid2)
- Rapid traverse rate during the 3-axis tandem superimposition control (#2626 pl3rapid)
- Rapid traverse rate 3 during the 2-axis tandem superimposition control (#2627 pl3rapid2)
- Rapid traverse rate 3 during the 3-axis tandem superimposition control (#2628 pl3rapid3)

(For details, refer to "16.4.1 Control Axis Superimposition ; G126" and "16.4.2 Arbitrary Axis Superimposition ; G156".)

### Program example

(1) Feedrate command in G00 block and G00 mode (for G00 interpolation)

| | |
|---|---|
| : | |
| G00 X100. Z100. ,F1000 ; | The tool moves at the combined feedrate, 1000 (mm/min), of XZ. |
| X200. Z200. ; | The X and Z axes interpolate at the fastest feedrate that does not exceed the rapid traverse rate parameter for each of these axes. |
| X300.Z300. ,F2500 ; | The tool moves at the combined feedrate, 2500 (mm/min), of XZ. |
| : | |

(2) Speed command for the movement to the initial point of the hole position for the drilling cycle (for a longitudinal tapping cycle)

| | |
|---|---|
| : | |
| G88 X-20. Z30 R5. F1.D3 S500 ,R1 ,F2000 ; | The tool moves to the initial point (Z30.) of the hole position at 2000 (mm/min). Positioning (G00) during the drilling cycle moves at 2000 (mm/min). |
| X-20. Z35. R5. ; | The tool moves to the initial point (Z35.) of the hole position at the Z axis rapid traverse rate (parameter setting value). |
| X-20. Z40. R5.,F3000 ; | The tool moves to the initial point (Z40.) of the hole position at 3000 (mm/min). Positioning (G00) during the drilling cycle moves at 2000 (mm/min). |
| G80 ; | |
| : | |

## Relationship with Other Functions

### Rapid traverse constant-gradient acceleration/deceleration

When ",F" is specified, constant-gradient acceleration/deceleration control is applied to the feedrate specified by ",F".
The feedrate (vertical axis in the figure below) varies depending on whether or not the ",F" command has been issued. When the ",F" command has not been issued, the parameter "#2001 rapid" (Rapid traverse rate) setting is applied to the feedrate. When the ",F" command has been issued, the ",F" command is applied to the feedrate.

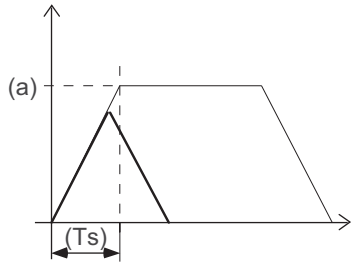


| | | | |
|---|---|---|---|
| ———— | When the travel distance is short | (a) | Rapid traverse rate by #2001 or ",F" command speed |
| ———— | When the travel distance is long | (Ts) | Time constant |

### Rapid traverse override

An override for ",F" command

### Override cancel

The override cancel for the rapid traverse override is also invalid when ",F" is specified.

### Dry run

Dry run is valid when the parameter "#1085 G00Drn" is ON and the rapid traverse is OFF. The axis will move at the manual feedrate that is set. If the manual override valid is turned ON, the cutting feed override also becomes valid.

### External deceleration

It is also valid when ",F" is specified.

### Programmable in-position check

It is also valid when ",F" is specified.

### Milling interpolation

The ",F" command is effective in milling mode:

### Control axis superimposition (G126)

Clamping of the ",F" command is performed according to the rapid traverse rate parameters that are selected depending on the direction and mode in which a superimposition related axis moves (rapid traverse rate during superimposition control (#2090 plrapid), rapid traverse rate 2 during superimposition control (#2621 plrapid2), rapid traverse rate during 3-axis tandem superimposition control (#2626 pl3rapid2), rapid traverse rate 2 during 3-axis tandem superimposition control (#2627 pl3rapid2), and rapid traverse rate 3 during 3-axis tandem superimposition control (#2628 pl3rapid3)).

### Inclined axis control

",F" command is also effective in inclined axis control. The feedrates on the programmed coordinates (orthogonal coordinates) become the ones specified by ",F".

### Reference position check, Start point return, Tool change position return

When an ",F" command is specified in the same block as G27 (reference position check), G29 (start point return), and/or G30.n (tool change position return), the feedrate specified by ",F" is assumed.

### Reference position return, 2nd to 4th reference position return

When an ",F" command is specified in the same block as G28 (reference position return) and G30 (2nd to 4th reference position return), the feedrate specified by ",F" is assumed.
Axes not subject to high-speed reference position return are returned by the dog-type of in the same way as with the manual type. The feedrate depends on the MTB specifications (parameter "#2025 G28rap").

## Precautions

(1) If an ",F" command is specified when there is no specifications for the feedrate specified for G00, a program error (P39) will occur.

(2) ",F" and "F" commands may be specified in the same block. The "F" command is assumed to the feedrate for cutting feed.

(3) Depending on the MTB specifications (parameter "#1100 Tmove"), compensation may be performed on a block that does not contain a move command.
If an ",F" is specified in a tool compensation command (T command) block in which no move command is specified, compensation move is made at the feedrate specified by ",F" only in G00 mode.

(4) If an ",F" is specified in a nose R compensation cancel command (G40) block in which no move command is specified, nose R compensation is canceled at the specified feedrate only in G00 mode.

# 7.2 Cutting Feedrate

## Function and purpose

This function specifies the feedrate of the cutting commands, and a feed amount per spindle rotation or feed amount per minute is commanded. Once commanded, it is stored in the memory as a modal value. The feedrate modal is cleared to zero only when the power is turned ON. The maximum cutting feedrate is clamped by the cutting feedrate clamp parameter (whose setting range is the same as that for the cutting feedrate).
The cutting feedrate is assigned with address F and numerals.
The cutting feedrate is valid for the G01, G02, G03, G33 and G34 commands.

If the high-accuracy control mode's cutting clamp speed is set, the cutting feedrate will be clamped at that feedrate during high-accuracy control, high-speed high-accuracy control I/II, or SSS control.

- If the value set for the high-accuracy control mode cutting clamp speed is "0", the axis will be clamped at the cutting feed clamp speed.
- The cutting feedrate is clamped with high-accuracy control mode cutting clamp speed in the parameter.

Examples Feed per minute (asynchronous feed)

Metric input

| Feedrate | | | | | |
|---|---|---|---|---|---|
| G01 | X100. | Z100. | F200 ; | 200.0mm/min | F200 or F200.000 gives the same rate. |
| G01 | X100. | Z100. | F123.4 ; | 123.4mm/min | |
| G01 | X100. | Z100. | F56.789 ; | 56.789mm/min | |

Inch input

| Feedrate | | | | | |
|---|---|---|---|---|---|
| G01 | X100. | Z100. | F200 ; | 2.0inch/min | |
| G01 | X100. | Z100. | F200 ; | 200.0inch/min | |
| G01 | X100. | Z100. | F123.4 ; | 123.4inch/min | |
| G01 | X100. | Z100. | F56.789 ; | 56.789inch/min | |

Speed range that can be commanded (when input setting unit is 1μm)

| Command Mode | Feedrate command range | Remarks |
|---|---|---|
| mm/min | 0.001 to 10000000 | |
| inch/min | 0.0001 to 1000000 | |
| °/min | 0.001 to 10000000 | |

**Note**

(1) A program error (P62) will occur when there is no F command in the first cutting command (G01, G02, G03, G33, G34) after the power has been turned ON.

# 7.3 F1-digit Feed

## Function and purpose

By setting the F1-digit feed parameter, the feedrate which has been set to correspond to the 1-digit number following the F address serves as the command value.
When F0 is assigned, the rapid traverse rate is established and the speed is the same as for G00. (G modal does not change, but the acceleration/deceleration method follows the rapid traverse setting.)
When F1 to F5 is assigned, the feedrate set to correspond to the command serves as the command value.
If F1-digit feedrate changing valid signal is turned ON when F1-digit feed is commanded, the feedrate specified by the parameter can be increased or decreased by operation of manual handle. For the changing of F1-digit feedrate with the handle feed, refer to the instruction manual.

## Detailed description

(1) To validate the F1-digit feed, the parameter "#8145 Validate F1 digit" or "#1079 f1digt" must be ON.

(2) The feedrates that correspond to F1 to F5 depend on the MTB specifications (parameters "#1185 spd_F1" to "#1189 spd_F5").
The increase/reduction range is from "0" to the set value of the parameter "#1506 F1_FM".
An operation error (M01 0104) will occur when the feedrate is "0".
When F0 is commanded, the acceleration or deceleration method follows the rapid traverse setting. Note that the G modal is not changed.

(3) Use of both the F1-digit command and normal cutting feedrate command is possible when the F1-digit is valid.
(Example 1) F0 Rapid traverse rate
F1 to F5 F1 digit
F6 or more Normal cutting feedrate command

(4) The F1-digit command is valid in a G01, G02, G03, G02.1 or G03.1 modal.

(5) The F1-digit command can also be used for fixed cycle.

(6) The F1-digit feedrate command can also be used during high-speed high-accuracy control II.
However, a program error (P62) will occur when F0 command is issued.

(7) The F1-digit command is modal.

(8) The number of manual handle pulses is 1 pulse per scale unit regardless of the scaling factor.

(9) During a F1-digit command, the F1-digit number and F1-digit command signal are output as the PLC signals. (Based on the MTB specifications.)

### Precautions

(1) F1 to F5 are invalid in the G00 mode and the rapid traverse rate is established instead.

(2) If F0 is used in the G02, G03, G02.1 or G03.1 mode, the program error (P121) will occur. The error will be eliminated if the F0 command is rewritten.

(3) When F1. to F5. (with decimal point) are assigned, the 1mm/min to 5mm/min (direct numerical value command) are established instead of the F1-digit feed command.

(4) When the commands are used with inch units, one-tenth of the feedrate set correspond to F1 to F5 serves at the assigned speed inch/min.

(5) When the commands are used with the millimeter or degree units, the feedrate set to correspond to F1 to F5 serves as the assigned speed mm (°)/min.

(6) Even if the F1-digit feed is commanded during feed per revolution (G95), it is executed as a normal F command (direct numerical value command).

(7) When both the F1-digit feed command and inverse time feed command are present, the inverse time feed command will have priority.
(The inverse time feed function is available only for a machining center system.)

(8) When both the F1-digit feedrate changing and the manual speed command are present, the manual speed command will have the priority.

(9) In the synchronous tapping command, the speed cannot be changed with the handle.

# 7.4 Feed Per Minute/Feed Per Revolution (Asynchronous Feed/ Synchronous Feed); G94,G95

## Function and purpose

### Feed per minute (asynchronous feed)

By issuing the G94 command, the commands from that block are issued directly by the numerical value following F as the feedrate per minute (mm/min, inch/min).

### Feed per revolution (synchronous feed)

By issuing the G95 command, the commands from that block are issued directly by the numerical value following F as the feedrate per spindle revolution (mm/rev, inch/rev).
When this command is used, the rotary encoder must be attached to the spindle.

## Command format

### Feed per minute (mm/min) (asynchronous feed)

```
G94;
```

### Feed per revolution (mm/rev) (synchronous feed)

```
G95;
```

## Detailed description

G94/G95 commands are modal commands.

(Example) After the G95 command is assigned, the G95 command is valid until the G94 command is assigned next.

(1) The F code command range is as follows.

Metric input

| **Input Setting unit** | **B (0.001 mm)** | | **C (0.0001 mm)** | |
|---|---|---|---|---|
| **Command Mode** | Feed per minute | Feed per revolution | Feed per minute | Feed per revolution |
| **Command Address** | F (mm/min) | F (mm/rev) | F (mm/min) | F (mm/rev) |
| **Minimum command unit** | 1 (=1.000)<br>(1.=1.000) | 1 (=0.0001)<br>(1.=1.00) | 1 (=1.0000)<br>(1.=1.0000) | 1 (=0.00001)<br>(1.=1.00) |
| **Command range** | 0.001 -<br>1000000.000 | 0.0001 -<br>999.9999 | 0.0001 -<br>1000000.0000 | 0.00001 -<br>999.99999 |

| **Input Setting unit** | **D (0.00001 mm)** | | **E (0.000001 mm)** | |
|---|---|---|---|---|
| **Command Mode** | Feed per minute | Feed per revolution | Feed per minute | Feed per revolution |
| **Command Address** | F (mm/min) | F (mm/rev) | F (mm/min) | F (mm/rev) |
| **Minimum command unit** | 1 (=1.00000)<br>(1.=1.00000) | 1 (=0.000001)<br>(1.=1.00) | 1 (=1.000000)<br>(1.=1.000000) | 1 (=0.0000001)<br>(1.=1.00) |
| **Command range** | 0.00001 -<br>1000000.00000 | 0.000001 -<br>999.999999 | 0.000001 -<br>1000000.000000 | 0.0000001 -<br>999.9999999 |

Inch input

| Input Setting unit | B (0.0001 inch) | | C (0.00001 inch) | |
|---|---|---|---|---|
| Command Mode | Feed per minute | Feed per revolution | Feed per minute | Feed per revolution |
| Command Address | F (inch/min) | F (inch/rev) | F (inch/min) | F (inch/rev) |
| Minimum command unit | 1 (=0.0100)<br>(1.=1.0000) | 1 (=0.000001)<br>(1.=1.000) | 1 (=0.01000)<br>(1.=1.00000) | 1 (=0.0000001)<br>(1.=1.000) |
| Command range | 0.0001 -<br>100000.0000 | 0.00001 -<br>99.99999 | 0.00001 -<br>100000.00000 | 0.000001 -<br>99.999999 |

| Input Setting unit | D (0.000001 inch) | | E (0.0000001 inch) | |
|---|---|---|---|---|
| Command Mode | Feed per minute | Feed per revolution | Feed per minute | Feed per revolution |
| Command Address | F (inch/min) | F (inch/rev) | F (inch/min) | F (inch/rev) |
| Minimum command unit | 1 (=0.010000)<br>(1.=1.000000) | 1 (=0.00000001)<br>(1.=1.000) | 1 (=0.0100000)<br>(1.=1.0000000) | 1 (=0.000000001)<br>(1.=1.000) |
| Command range | 0.000001 -<br>100000.000000 | 0.0000001 -<br>99.9999999 | 0.0000001 -<br>100000.0000000 | 0.00000001 -<br>99.99999999 |

(2) The effective rate (actual movement speed of machine) under per-revolution feed conditions is given in the following formula (Formula 1).
FC = F × N × OVR ..... (Formula 1)
FC: Effective rate (mm/min, inch/min)
F: Commanded feedrate (mm/rev, inch/rev)
N: Spindle rotation speed (r/min)
OVR: Cutting feed override

When multiple axes have been commanded at the same time, the effective rate FC in formula 1 applies in the vector direction of the command.

## Precautions

(1) The effective rate (mm/min or inch/min), which is produced by converting the commanded speed, the spindle rotation speed and the cutting feed override into the per-minute speed, appears as the FC on the monitor 1. Screen of the setting and display unit.

(2) When the above effective rate exceeds the cutting feed clamp rate, it is clamped at that clamp rate.

(3) If the spindle rotation speed is zero when feed per revolution is executed, an operation error (M01 0105) occurs.

(4) Even in the machine lock status, the feedrate in feed per revolution follows the issued F command.

(5) Under dry run conditions, feed per minute applies and movement results at the manual feedrate (mm/min or inch/min).

(6) The feed mode in the following cases follows the modal (G94/G95).

- Face tapping cycle (G84)
- Longitudinal tapping cycle (G88)
- Face reverse tapping cycle (G84.1)
- Longitudinal reverse tapping cycle (G88.1)

(7) Whether feed per minute (G94) or feed per revolution (G95) is to be established when the power is turned ON or when M02 or M30 depends on the MTB specifications (parameter "#1074 I_Sync").

# 7.5 Feedrate Designation and Effects on Control Axes

## Function and purpose

It has already been mentioned that a machine has a number of control axes. These control axes can be divided into linear axes which control linear movement and rotary axes which control rotary movement. The feedrate is designed to assign the displacement speed of these axes, and the effect exerted on the tool movement speed which poses problems during cutting differs according to when control is exercised over the linear axes or when it is exercised over the rotary axes.
The displacement amount for each axis is assigned separately for each axis by a value corresponding to the respective axis. The feedrate is not assigned for each axis but assigned as a single value. Therefore, when two or more axes are to be controlled simultaneously, it is necessary to understand how this will work for each of the axes involved.
The assignment of the feedrate is described with the following related items.

## Detailed description

### When controlling linear axes

Even when only one machine axis is to be controlled or there are two or more axes to be controlled simultaneously, the feedrate which is assigned by the F code functions as a linear speed in the tool advance direction.

(Example) When the feedrate is designated as "f" and linear axes (X and Z) are to be controlled:

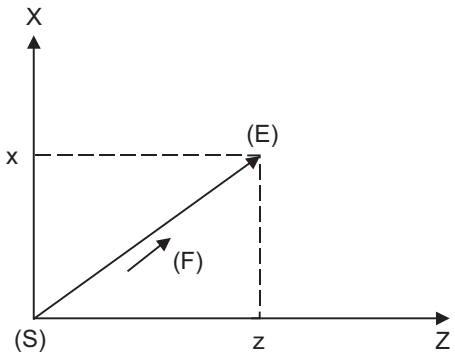


$$fx = f \times \frac{x}{\sqrt{x^2 + z^2}}$$ ... Feedrate for X axis

$$fz = f \times \frac{z}{\sqrt{x^2 + z^2}}$$ ... Feedrate for Z axis

(S) Tool start point
(E) Tool end point
(F) Speed in this direction is "f".

When only linear axes are to be controlled, it is sufficient to designate the cutting feed in the program.
The feedrate for each axis is such that the designated rate is broken down into the components corresponding to the movement amounts.

(Example) When the feedrate is designated as "f" and the linear axes (X and Z) are to be controlled using the circular interpolation function:

The rate in the tool advance direction, or in other words the tangential direction, will be the feedrate designated in the program.

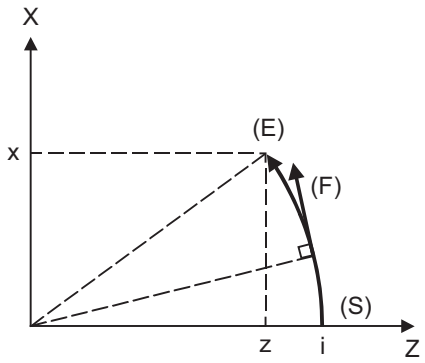


(S) Tool start point
(E) Tool end point
(F) Speed in this direction is "f".

In this case, the feedrate of the X and Z axes will change along with the tool movement. However, the combined speed will always be maintained at the constant value "f".

### When controlling rotary axes

When rotary axes are to be controlled, the designated feedrate functions as the rotary speed of the rotary axes or, in other words, as an angular speed.
Consequently, the cutting feed in the tool advance direction, or in other words the linear speed, varies according to the distance between the center of rotation and the tool.
This distance must be borne in mind when designating the feedrate in the program.

(Example) When the feedrate is designated as "f" and rotary axis (C) is to be controlled ("f" units = °/min)

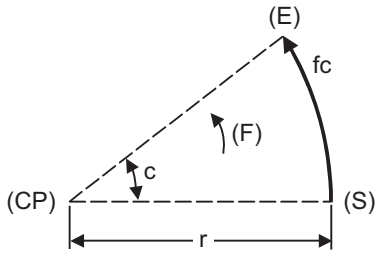


(S) Tool start point
(E) Tool end point
(CP) Center of rotation
(F) Angular speed is "f".

In this case, the cutting feed (linear feed) in the tool advance direction "fc" is obtained as follows:

$$fc = f \times \frac{\pi \cdot r}{180}$$

Therefore, the feedrate to be designated in the program must be as follows:

$$f = fc \times \frac{180}{\pi \cdot r}$$

### When linear and rotary axes are to be controlled at the same time

The controller proceeds in exactly the same way whether linear or rotary axes are to be controlled.
When a rotary axis is to be controlled, the numerical value assigned by the coordinate word (C, H) is the angle and the numerical values assigned by the feedrate (F) are all handled as linear speeds. In other words, 1° of the rotary axis is treated as being equivalent to 1mm of the linear axis.
Consequently, when both linear and rotary axes are to be controlled simultaneously, in the components for each axis of the numerical values assigned by F will be the same as previously described "When controlling linear axes". However, although in this case both the size and direction of the speed components based on linear axis control do not vary, the direction of the speed components based on rotary axis control will change along with the tool movement (their size will not change). This means, as a result, that the combined tool advance direction feedrate will vary along with the tool movement.

(Example) When the feedrate is designated as "f" and the linear axis (X) and the rotary axis (C) are to be controlled simultaneously:

In the figure below, the X axis incremental command value is "x" and the C axis incremental command values is "c":

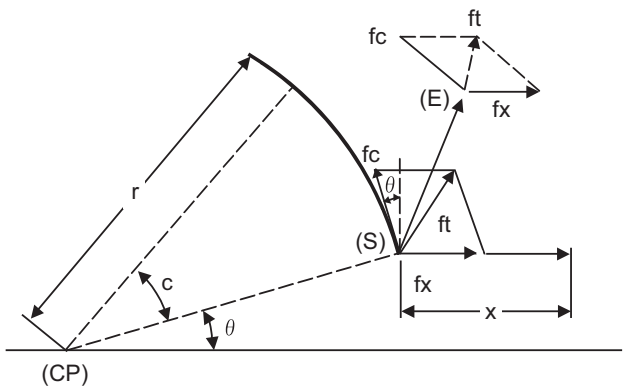


(S) Tool start point
(E) Tool end point
(CP) Center of rotation

Size and direction are fixed for "fx".
Size is fixed for "fc" but direction varies.
Size and direction vary for "ft".

X axis feedrate (linear speed) "fx" and C axis feedrate (angular speed) "ω" are expressed as:

$$fx = f \times \frac{x}{\sqrt{x^2 + c^2}} \quad \text{..... (1)}$$

$$\omega = f \times \frac{c}{\sqrt{x^2 + c^2}} \quad \text{..... (2)}$$

Linear speed "fc" based on C axis control is expressed as:

$$fc = \omega \times \frac{\pi \times r}{180} \quad \text{..... (3)}$$

If the speed in the tool advance direction at start point (S) is "ft" and the component speeds in the X axis and Y axis directions are "ftx" and "fty", respectively, then these can be expressed as:

$$ftx = -r\sin\left(\frac{\pi}{180}\theta\right) \times \frac{\pi}{180}\omega + fx \quad \text{..... (4)}$$

$$fty = -r\cos\left(\frac{\pi}{180}\theta\right) \times \frac{\pi}{180}\omega \quad \text{..... (5)}$$

Where "r" is the distance (in millimeters) between center of rotation and tool and "θ" is the angle (in degrees) between the (S) point and the X axis at the center of rotation.

The combined speed "ft" according to (1), (2), (3), (4) and (5) is as follows:

$$ft = \sqrt{ftx^2 + fty^2}$$

$$= f \times \frac{\sqrt{x^2 - x \times c \times r\sin\left(\frac{\pi}{180}\theta\right)\frac{\pi}{90} + \left(\frac{\pi \times r \times c}{180}\right)^2}}{x^2 + c^2}$$

..... (6)

Consequently, feedrate "f" designated by the program must be as follows:

$$f = ft \times \frac{x^2 + c^2}{\sqrt{x^2 - x \times c \times r\sin\left(\frac{\pi}{180}\theta\right)\frac{\pi}{90} + \left(\frac{\pi \times r \times c}{180}\right)^2}}$$

..... (7)

"ft" in formula (6) is the speed at the (S) point and the value of θ changes as the C axis rotates, which means that the value of "ft" will also change. Consequently, in order to keep the cutting feed "ft" as constant as possible the angle of rotation which is designated in one block must be reduced to as low as possible and the extent of the change in the θ value must be minimized.

# 7.6 Thread Cutting Mode

### Function and purpose

F command or E commands for thread leads can be issued for the thread cutting mode (G33, G34, G76 G78 commands).
For the thread leads command range, refer to "Thread Cutting".

# 7.7 Automatic Acceleration/Deceleration after Interpolation

## Function and purpose

Acceleration/deceleration is applied to axis traverse automatically. There are four types of acceleration/deceleration patterns: linear acceleration/deceleration, primary delay acceleration/deceleration, exponential acceleration-linear deceleration, and soft acceleration/deceleration. Which type of the pattern is used depends on the MTB specifications (axis specification parameter "#2003 smgst").

For rapid traverse, acceleration/deceleration is always made for each block, and the time constant is set separately for each axis.

Refer to the following figures for the acceleration/deceleration patterns of rapid feed and cutting feed.

| Rapid traverse | Cutting feed |
|---|---|
| <Linear acceleration/deceleration> 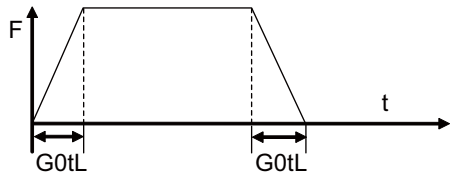  | <Linear acceleration/deceleration> 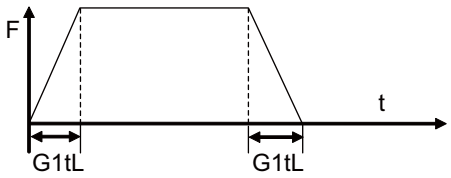  |
| <Primary delay> 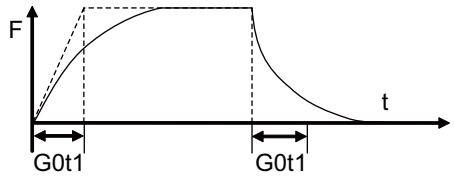  | <Primary delay> 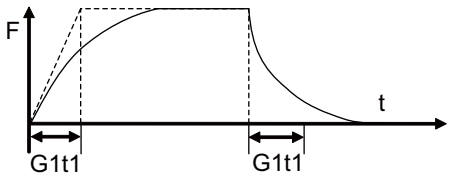  |
| <Exponential acceleration-Linear deceleration> 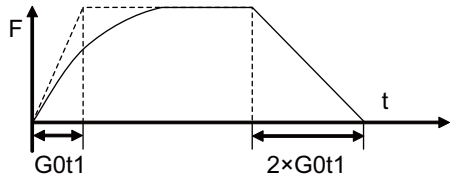  | <Exponential acceleration-Linear deceleration> 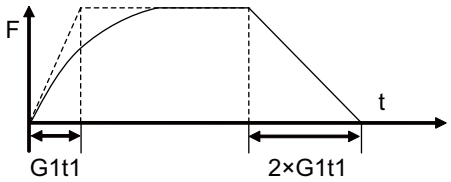  |
| <Soft acceleration/deceleration> 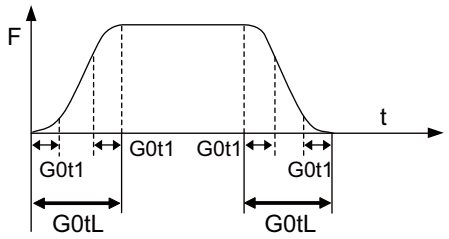  | <Soft acceleration/deceleration> 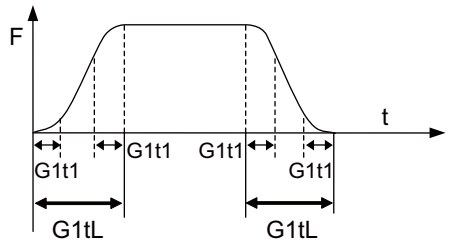  |

G0tL: G0 time constant (Linear)

G0t1: G0 time constant (Primary delay) / 2nd step time constant of soft acceleration/deceleration

G1tL: G1 time constant (Linear)

G1t1: G1 time constant (Primary delay) / 2nd step time constant of soft acceleration/deceleration

### Note

(1) The rapid traverse feed acceleration/deceleration patterns are effective for the following:
G00, G27, G28, G29, G30, rapid traverse feed in manual run, JOG feed, incremental feed, return to referenceposition.
It is invalid to G31 and handle feed.

(2) Acceleration/deceleration in handle feed mode is usually performed according to the acceleration/ deceleration pattern for cutting feed. However, a parameter can be specified to select a pattern with no acceleration/deceleration (step).

## Detailed description

(1) Acceleration/deceleration are automatically controlled both in automatic and manual operations. The acceleration/deceleration patterns depend on the MTB specifications (parameter "#2003 smgst").

(2) Acceleration/deceleration time of soft acceleration/deceleration depends on the MTB specifications (parameter "#1219 aux03/BIT7").

[When the basic specification parameter "#1219 aux03/bit7" is OFF.]

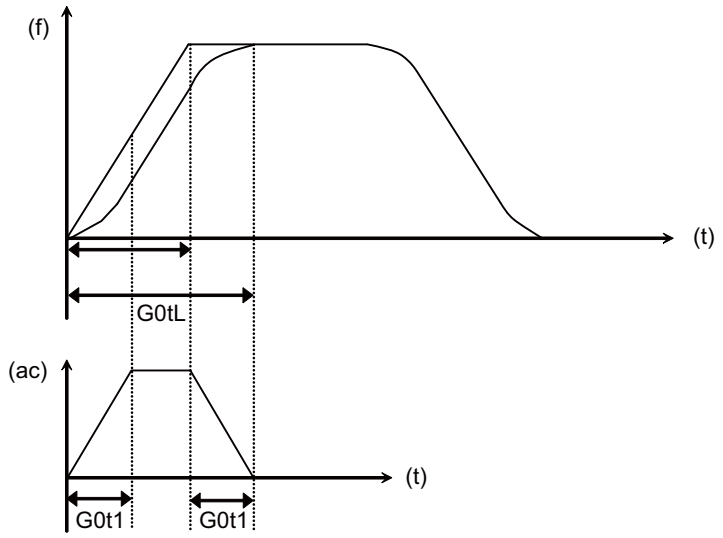


Total accelerating time: G0tL
S-pattern part time: G0t1
Linear part time: G0tL-(2×G0t1)

(f): Speed
(t): Time
(ac): Acceleration rate

[When the basic specification parameter "#1219 aux03/bit7" is ON.]

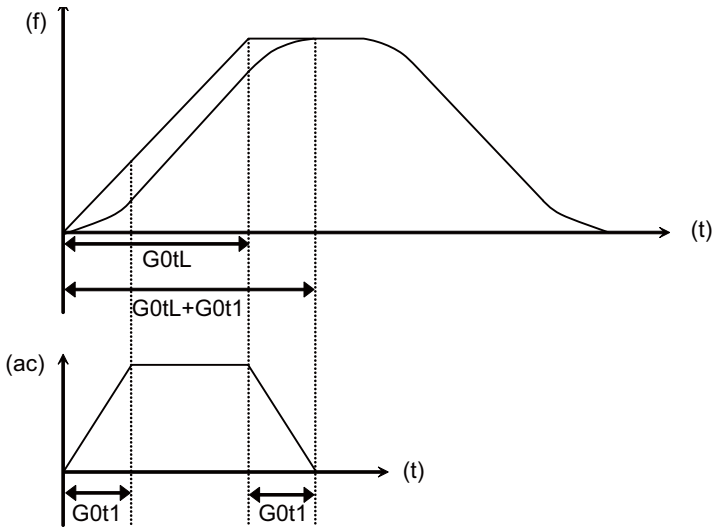


Total accelerating time: G0tL+G0t1
S-pattern part time: G0t1
Linear part time: G0tL-G0t1

(f): Speed
(t): Time
(ac): Acceleration rate

(3) Use the rapid traverse time constant changeover request signal to switch the rapid traverse time constant. The operations via PLC signals and the settings of related parameters depend on the MTB specifications.

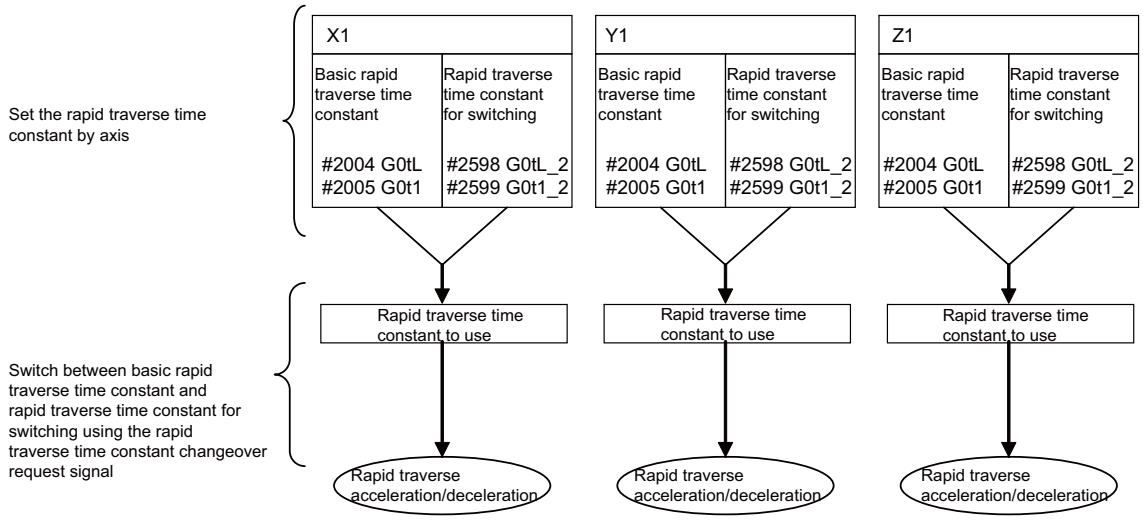


[Parameters]

Rapid traverse time constants for switching and for basic are set in the following paramaters.

| | Rapid traverse time constant for switching | Basic rapid traverse time constant |
|---|---|---|
| Rapid traverse time constant | Axis specification parameter #2598 G0tL_2 | Axis specification parameter #2004 G0tL |
| Rapid traverse time constant (primary delay) / 2nd step time constant of soft acceleration/deceleration | Axis specification parameter #2599 G0t1_2 | Axis specification parameter #2005 G0t1 |

**Note**

(1) When #2598 is "0", #2004 is used. When #2599 is "0", #2005 is used.

[How to switch time constants]

Turn ON the rapid traverse time constant changeover request signal so that the rapid traverse time constant is changed to the rapid traverse time constant for switching. Turn OFF the rapid traverse time constant changeover request signal so that the rapid traverse time constant is changed to the basic rapid traverse time constant.

[Timing to switch time constants]

Automatic operation: When the changeover is requested during rapid traverse, the axis is decelerated and stopped at the end of the block, and then the time constant will be changed.
Automatic operation: When the changeover is requested during cutting feed or axis stop state, the time constant will be changed immediately.
Manual operation: When the changeover is requested while the axis is moving, the time constant will be changed after the axis is decelerated and stopped.

[Operation examples]

Rapid traverse time constant switching 1 ( turn on the rapid traverse time constant changeover request signal during the axis travel.)

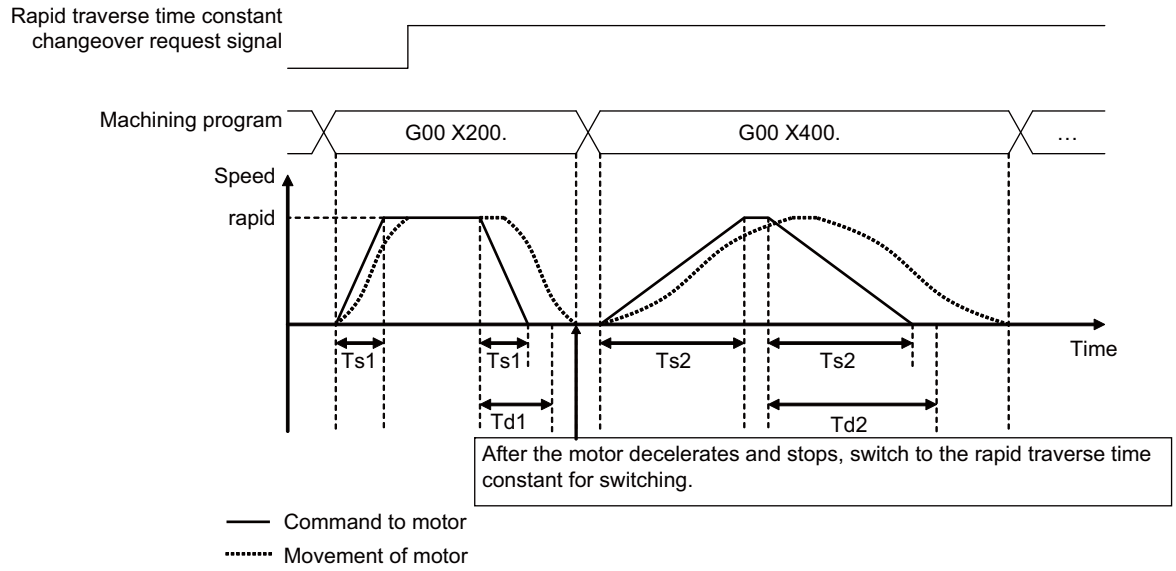


rapid: Rapid traverse rate (Axis specification parameter "#2001 rapid")
Ts1: Acceleration/deceleration time (Axis specification parameter "#2004 G0tL" (Rapid traverse time constant) = 100 ms)
Ts2: Acceleration/deceleration time (Axis specification parameter "#2598 G0tL_2" (Rapid traverse time constant 2) = 300 ms)
Td1: Commanded deceleration check time (Td1=Ts1+(0 to 14 ms))
Td2: Commanded deceleration check time (Td2=Ts2+(0 to 14 ms))

Rapid traverse time constant switching 2 (turn off the rapid traverse time constant changeover request signal during the axis travel.)

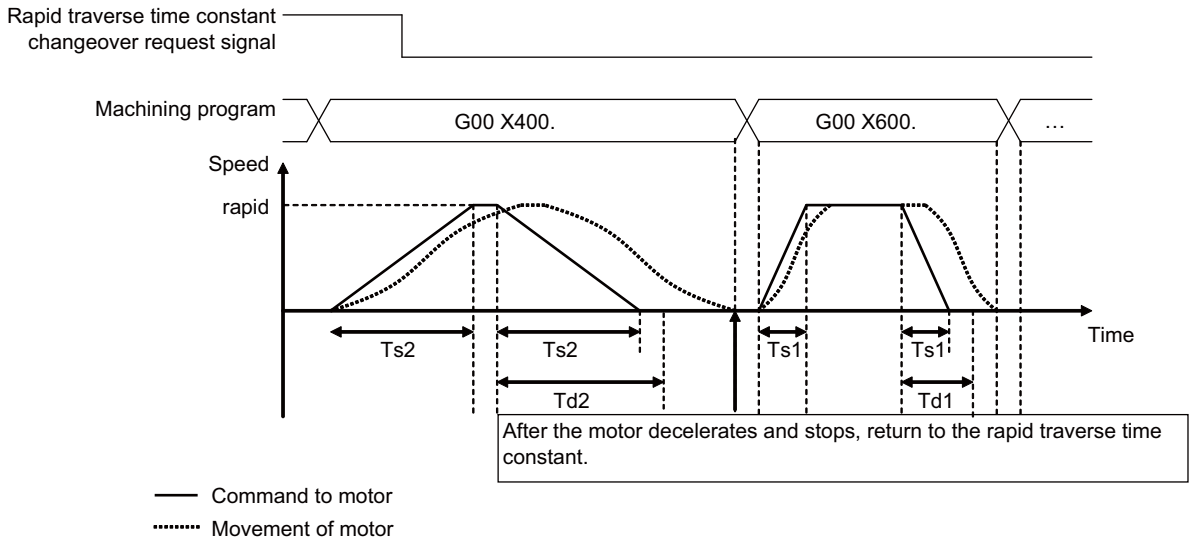


rapid: Rapid traverse rate (Axis specification parameter "#2001 rapid")
Ts1: Acceleration/deceleration time (Axis specification parameter "#2004 G0tL" (Rapid traverse time constant) = 100 ms)
Ts2: Acceleration/deceleration time (Axis specification parameter "#2598 G0tL_2" (Rapid traverse time constant 2) = 300 ms)
Td1: Commanded deceleration check time (Td1=Ts1+(0 to 14 ms))
Td2: Commanded deceleration check time (Td2=Ts2+(0 to 14 ms))

### Precautions

(1) When the time constant < 2nd step time constant under the soft acceleration/deceleration, the feedrate pattern of the time constant and 2nd step time constant are interchanged.

# 7.8 Rapid Traverse Constant-gradient Acceleration/Deceleration

## Function and purpose

This function performs acceleration and deceleration at a constant gradient during linear acceleration/deceleration in the rapid traverse mode. The constant-gradient acceleration/deceleration method can be more beneficial in reducing cycle time in comparison to the acceleration/deceleration with fixed time constant method.

## Detailed description

(1) Rapid traverse constant-gradient acceleration/deceleration are valid only for a rapid traverse (G00) command. Also, this function is effective only when the rapid traverse command acceleration/deceleration mode is linear acceleration/deceleration or soft acceleration/deceleration.

(2) The acceleration/deceleration patterns in the case where rapid traverse constant-gradient acceleration/deceleration are performed are as follows.

**[When the interpolation distance is long enough for the rapid traverse rate to be achieved]**

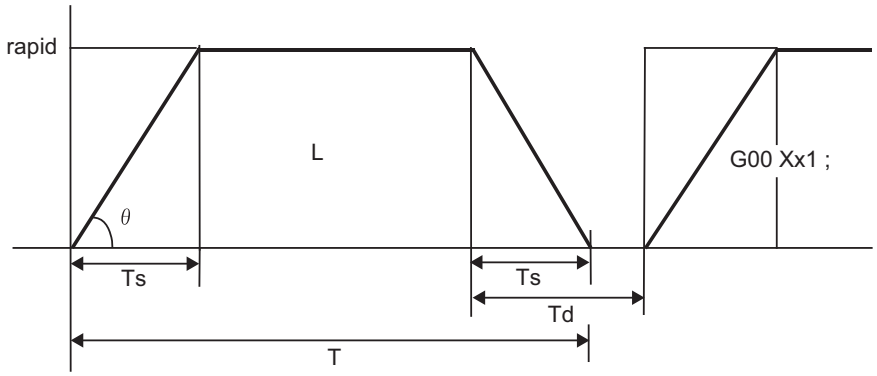


$$T = \frac{L}{rapid} + Ts$$

$$Td = Ts + (0 - 14ms)$$

$$\theta = \tan^{-1}\left(\frac{rapid}{Ts}\right)$$

rapid : Rapid traverse rate
Ts : Acceleration/deceleration time constant
Td : Command deceleration check time
θ : Acceleration/deceleration gradient
T : Interpolation time
L : Interpolation distance

**[When the interpolation distance is so short that the rapid traverse rate is not achieved]**

(a) Acceleration/deceleration with fixed time constant:

Even if the interpolation distance is short, interpolation takes twice as long as the time constant.

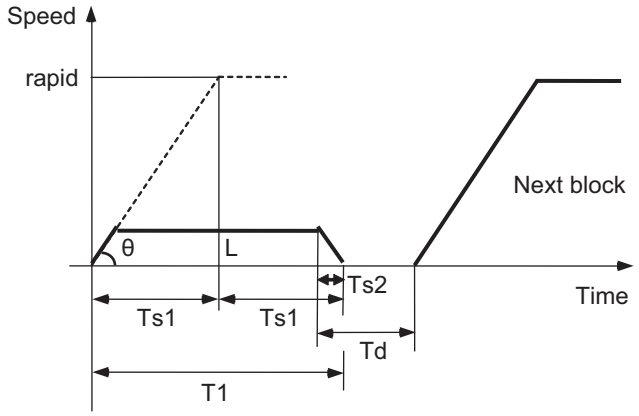


(b) Constant-gradient acceleration/deceleration:

The interpolation time is shorter than the acceleration/deceleration with fixed time constant.

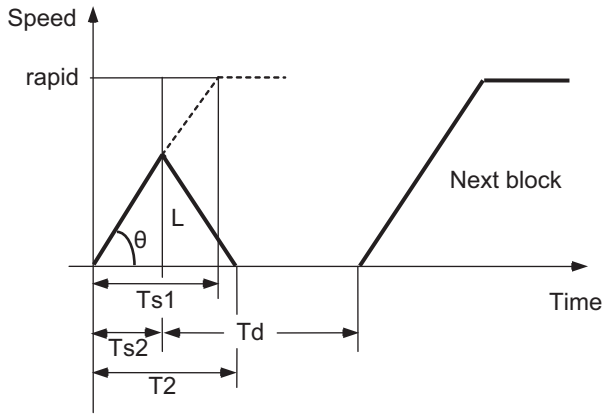


$$T1 = 2 \times Ts1$$

$$T2 = 2 \times \sqrt{Ts1 \times L/rapid}$$

$$Td = T2/2 + (0 - 14\ ms)$$

$$\theta = \frac{\tan^{-1}}{Ts1}(rapid)$$

rapid : Rapid traverse rate (Parameter "#2001 rapid")
Ts1 : Acceleration/deceleration time (Parameter "#2004 G0tL")
Ts2 : Acceleration/deceleration time to reach the maximum speed
Td : Command deceleration check time
θ : Acceleration/deceleration gradient
T1 : Interpolation time (Acceleration/deceleration with fixed time constant)
T2 : Interpolation time (Constant-gradient acceleration/deceleration)
L : Interpolation distance

(3) The time required for the command deceleration check during rapid traverse constant-gradient acceleration/deceleration is the longest one among the deceleration check times of the axes which are commanded simultaneously.
The deceleration check times of each axis is determined by the following items; rapid traverse rate (set by the parameter "#2001 rapid"); rapid traverse acceleration/deceleration time constant (set by the parameter "#2004 G0tL"); and interpolation distance (L).
When multi-axis simultaneous interpolation (linear interpolations) is performed during rapid traverse constant-gradient acceleration/deceleration, the longest one among the acceleration/deceleration times of all axes is applied to the other axes which were commanded simultaneously.
The acceleration/deceleration time is determined for each axis by the following items; rapid traverse rate; rapid traverse acceleration/deceleration time constant; and the interpolation distance. Consequently, linear interpolation is performed even when the acceleration/deceleration time constant for each axis is different.
However, the axis of which the acceleration/deceleration time constant is greater than the rapid traverse acceleration/deceleration time constant ("#2004") is accelerated/decelerated with the rapid traverse acceleration/deceleration time constant.

**[2-axis simultaneous interpolation (When linear interpolation is used, Tsx < Tsz, Lx ≠ Lz)]**

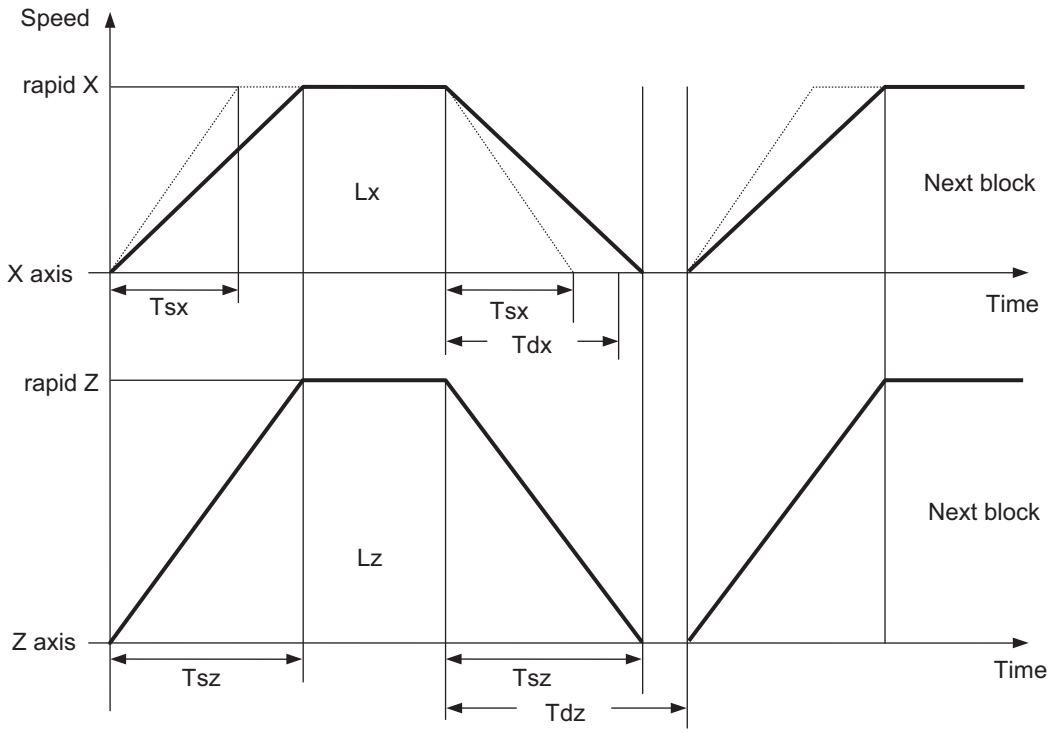


When the result is "Tsx < Tsz", the acceleration/deceleration time (Ts) of this block is set to Tsz (acceleration/deceleration time of the Z axis).
Since "Tdx < Tdz" is obtained as the result, the command deceleration check time (Td) of this block is set to Tdz (command deceleration check time of the Z axis).

Tsx : X axis acceleration/deceleration time
Tsz : Z axis acceleration/deceleration time
Tdx : X axis commanded deceleration check time
Tdz : Z axis commanded deceleration check time
Lx : X axis interpolation distance
Lz : Z axis interpolation distance

(4) If a minimum time constant for constant-gradient acceleration/deceleration has been set by the parameter, acceleration/deceleration speed is adjusted to prevent the acceleration/deceleration time calculated by interpolation distance from going below the minimum time constant.

**[When the interpolation distance is so short that the acceleration/deceleration time is shorter than the minimum time constant for constant-gradient acceleration/deceleration]**

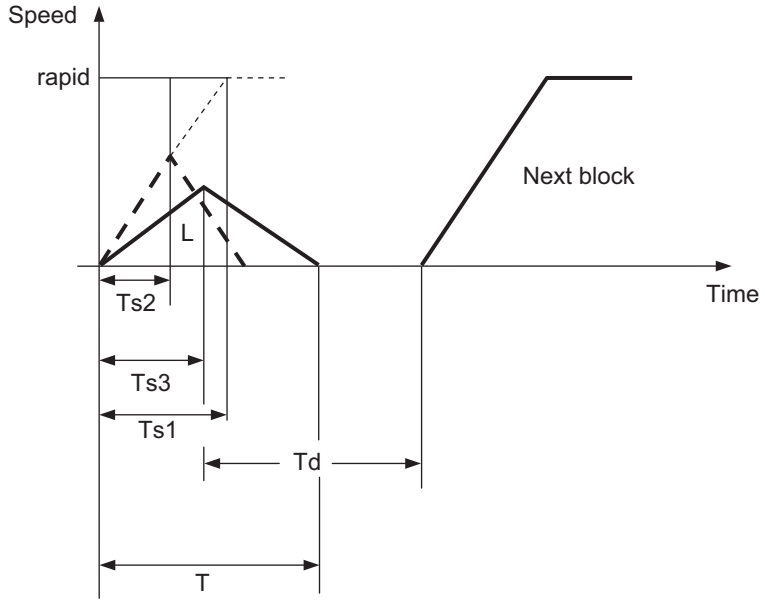


$$T = 2 \times Ts2$$

$$Td = T/2 + (0 \text{ to } 14 \text{ ms})$$

rapid : Rapid traverse rate (Parameter "#2001 rapid")
Ts1 : Acceleration/deceleration time (Parameter "#2004 G0tL")
Ts2 : Acceleration/deceleration time to reach the maximum speed
Ts3 : Minimum time for constant-gradient acceleration/deceleration (Parameter "#2198 G0tMin")
Td : Command deceleration check time
T : Interpolation time
L : Interpolation distance

(5) Use the "Rapid traverse time constant: Switchover request" signal to switch the rapid traverse time constant. The operations via PLC signals and the settings of related parameters depend on the MTB specifications.
The time constant is switched in the block next to where the "Rapid traverse time constant: Switchover request" signal is turned ON/OFF.

| | Basic rapid traverse time constant (signal OFF) | Rapid traverse time constant for switching (signal ON) |
|---|---|---|
| Rapid traverse time constant | #2004 G0tL | #2598 G0tL_2 |
| Rapid traverse time constant (primary delay) / 2nd step time constant of soft acceleration/ deceleration | #2005 G0t1 | #2599 G0t1_2 |

<Note>
- When "#2598" is "0", use "#2004".# When "#2599" is "0", use "#2005".
- The time constant switched by the "Rapid traverse time constant: Switchover request" signal is only the rapid traverse time constant or the rapid traverse time constant (primary delay)/2nd step time constant of soft acceleration/deceleration.

(6) The program format of G00 (rapid traverse command) when rapid traverse constant-gradient acceleration/deceleration are executed is the same as when this function is invalid (acceleration/deceleration with fixed time constant).

## Relationship with other functions

(1) The constant-gradient acceleration/deceleration during dry run is disabled.
When the constant-gradient acceleration/deceleration is valid and the speed is changed by dry run during axis traveling, dry run is disabled in the currently executed block, and the constant-gradient acceleration/deceleration is performed at the same speed as before. Dry run is enabled from the next block, and the manual feedrate is applied. However, the acceleration/deceleration time remains unchanged.
When dry run is enabled and it canceled during axis traveling, dry run is immediately disabled, and the cutting feedrate is applied. After the speed was changed, the constant-gradient acceleration/deceleration is enabled.
When the high-speed machining mode is valid (under G5P2, under G5P10000, etc.), dry run is disabled. However, when the high-speed machining mode is canceled by the positioning command (G00 command) or single block stop command, dry run is enabled.
To enable dry run during the constant-gradient acceleration/deceleration, use the high-accuracy control function (G61.1). Do not use this function.

**[When constant-gradient acceleration/deceleration is enabled and the "Dry run" signal is turned ON during axis traveling]**

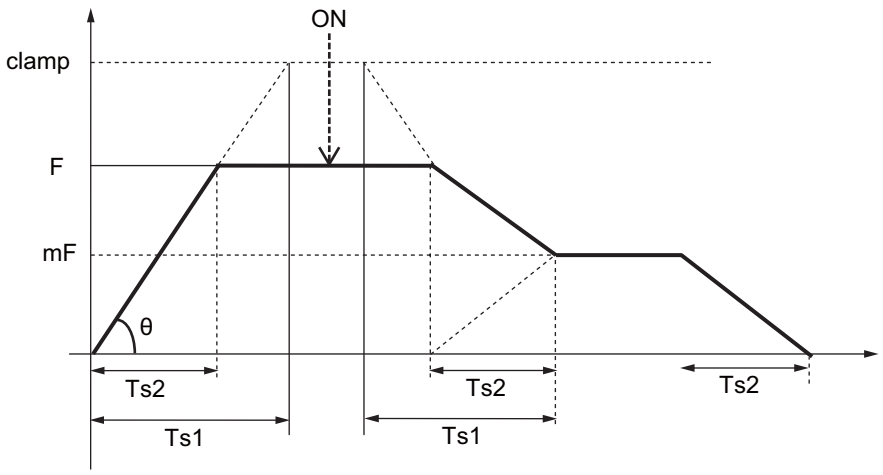


**[When dry run is enabled and the "Dry run" signal is turned OFF during axis traveling]**

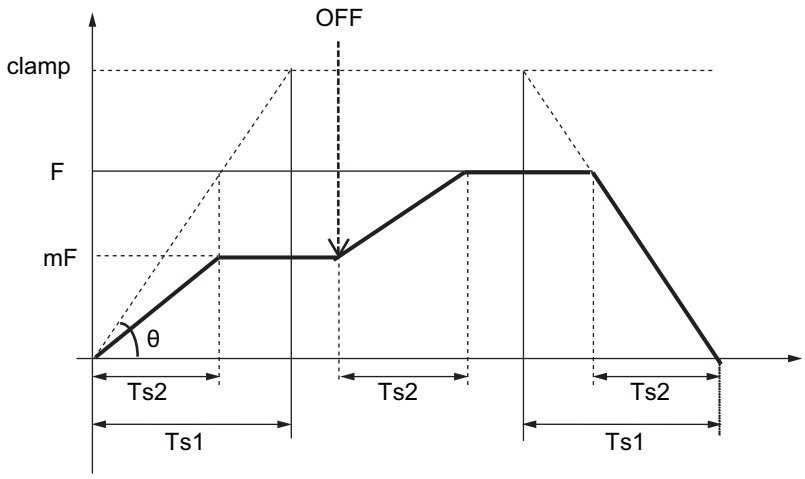


clamp : Maximum cutting feedrate (Parameter "#2002 clamp")
F : Cutting feedrate
mF : Manual feedrate
Ts1 : Acceleration/deceleration time (Parameter "#2007 G1tL")
Ts2 : Acceleration/deceleration time to reach the cutting feedrate
θ : Acceleration/deceleration gradient
ON : "Dry run" signal ON
OFF : "Dry run" signal OFF

(2) The constant-gradient acceleration/deceleration is valid for the rapid traverse command in the fixed cycle.
To switch the rapid traverse time constant in the fixed cycle, issue the "Rapid traverse time constant: Switchover request" during G80 mode.
If the "Rapid traverse time constant: Switchover request" is issued in the fixed cycle, the time constant may not be switched.

### Precautions

(1) Rapid traverse constant-gradient acceleration/deceleration is performed only when the motion path of the rapid traverse command is the interpolation type (parameter "#1086 G0Intp" is set to "0").

(2) When "#2003 smgst" (acceleration/deceleration mode) is set to the soft acceleration/deceleration, and "#1219 aux03 bit7" (time constant setting changeover for soft acceleration/deceleration) is set to "1", the acceleration/deceleration speed is adjusted to prevent the sum of the 1st step and 2nd step acceleration/deceleration times from going below the minimum time constant for constant-gradient acceleration/deceleration. In this case, the acceleration time will be "G0tL+G0t1" or "G1tL+G1t1".

(3) When "#2003 smgst" (acceleration/deceleration mode) is set to the soft acceleration/deceleration, if the acceleration/deceleration is shorter than G0tL (or G1tL), the 2nd step time constant will be reduced by the same rate as the 1st step time constant.

(4) If a commanded travel distance in a block is small, acceleration/deceleration time becomes quite short when the constant-gradient acceleration/deceleration method is enabled. Although this does contribute to reduce the cycle time, this can also be a cause of machine vibrations. In these cases, if the minimum time constant for constant-gradient acceleration/deceleration is set in parameter "#2198 G0tMin", it is possible to perform acceleration/deceleration to prevent the acceleration/deceleration time from being below this setting value. This parameter depends on the MTB specifications.

(5) When the parameter "#1253 set25/bit2" (Acceleration/deceleration mode change in hole drilling cycle) is set to "1" (constant-gradient, acceleration/deceleration after interpolation), the rapid traverse in the fixed cycle modal is set to the constant-gradient acceleration/deceleration regardless of the setting of the parameter "#1200 G0_acc" (Validate acceleration and deceleration with inclination constant G0).

(6) If any one of the following commands is issued in the next block in which the "Rapid traverse time constant: Switchover request" signal is turned ON, the time constant switching may be delayed.

- G27 (Reference position check)
- G28 to G30 (Reference position return)
- G30.1 to G30.5 (Tool exchange position return)

# 7.9 Cutting Feed Constant-gradient Acceleration/Deceleration

## Function and purpose

This function performs linear acceleration/deceleration at a constant inclination in the cutting feed mode. The constant-gradient acceleration/deceleration method can be more beneficial in reducing cycle time in comparison to the acceleration/deceleration with fixed time constant method.

## Detailed description

(1) Cutting feed constant-gradient acceleration/deceleration function is effective only when the commanded cutting feed acceleration/deceleration mode is linear method or soft method in linear interpolation (G01) command.

(2) The program format of linear interpolation when cutting feed constant-gradient acceleration/deceleration is executed is the same as when this function is invalid (acceleration/deceleration with fixed time constant).

(3) The acceleration/deceleration patterns in the case where cutting feed constant-gradient acceleration/deceleration is performed are as follows.

**[When the interpolation distance is long enough for the cutting feedrate to be achieved]**

(a) Acceleration/deceleration with fixed time constant:

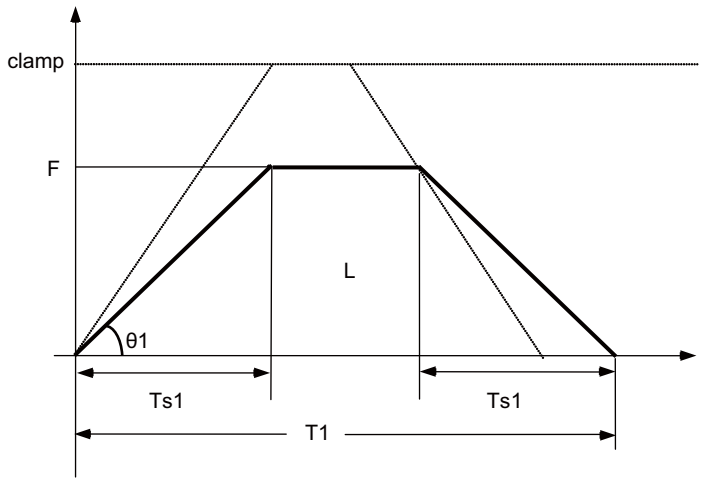


$$T1 = \frac{L}{F} + Ts1 \times 2$$

$$\theta 1 = \tan^{-1}\left(\frac{F}{Ts1}\right)$$

(b) Constant-gradient acceleration/deceleration:

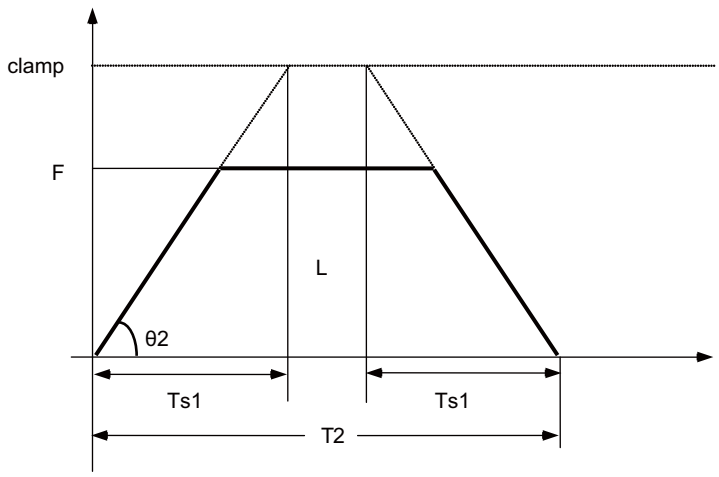


$$T2 = \frac{L}{F} + \frac{Ts1 \times F}{clamp}$$

$$\theta 2 = \tan^{-1}\left(\frac{clamp}{Ts1}\right)$$

clamp : Maximum cutting feedrate (Parameter "#2002 clamp")
F : Cutting feedrate
Ts1 : Acceleration/deceleration time (Parameter "#2007 G1tL")
θ1 : Acceleration/deceleration gradient (Acceleration/deceleration with fixed time constant)
θ2 : Acceleration/deceleration gradient (Constant-gradient acceleration/deceleration)
T1 : Interpolation time (Acceleration/deceleration with fixed time constant)
T2 : Interpolation time (Constant-gradient acceleration/deceleration)
L : Interpolation distance

In the case of acceleration/deceleration with fixed time constant, the acceleration/deceleration gradient is determined by the cutting feedrate. In the case of constant-gradient acceleration/deceleration, it is determined by the maximum cutting feedrate; therefore, the cycle time will be shorter than in the former case.

**[When the interpolation distance is so short that the cutting feedrate is not achieved]**

The acceleration/deceleration gradient is determined by the maximum cutting feedrate.

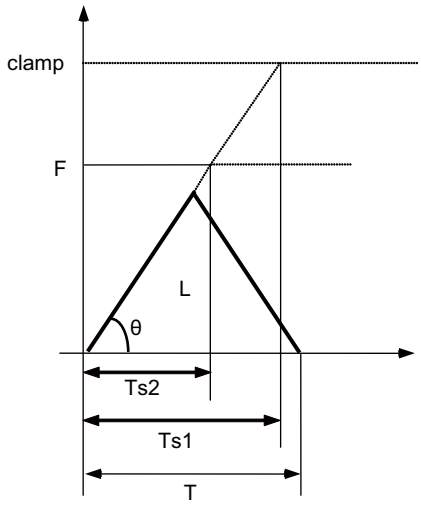


$$T = 2 \times \sqrt{Ts2 \times L / clamp}$$

$$\theta = \tan^{-1}\left(\frac{clamp}{Ts1}\right)$$

clamp : Maximum cutting feedrate (Parameter "#2002 clamp")
F : Cutting feedrate
Ts1 : Acceleration/deceleration time (Parameter "#2007 G1tL")
Ts2 : Acceleration/deceleration time to reach the cutting feedrate
θ : Acceleration/deceleration gradient
T : Interpolation time
L : Interpolation distance

**[When the interpolation distance is so short that the maximum cutting feedrate is not achieved and the override for cutting feed constant-gradient acceleration/deceleration is activated]**

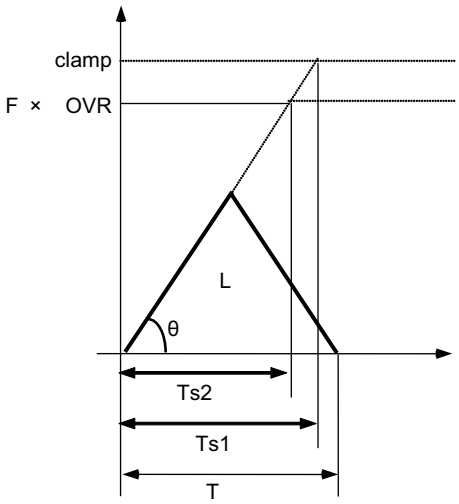


$$T = 2 \times \sqrt{Ts2 \times L \times OVR / clamp}$$

$$\theta = \tan^{-1}\left(\frac{clamp}{Ts1}\right)$$

clamp : Maximum cutting feedrate (Parameter "#2002 clamp")
F : Cutting feedrate
OVR : Maximum override value for cutting feed constant-gradient acceleration/deceleration (Parameter "#1367 G1AccOVRMax")
Ts1 : Acceleration/deceleration time (Parameter "#2007 G1tL")
Ts2 : Acceleration/deceleration time to reach the cutting feedrate
θ : Acceleration/deceleration gradient

**[2-axis simultaneous interpolation (When Tsx < Tsz, Lx ≠ Lz)]**

When multi-axis simultaneous interpolation is performed during linear interpolation constant-gradient acceleration/deceleration, the longest one among the acceleration/deceleration times of all axes is applied to the other axes which were commanded simultaneously.
The acceleration/deceleration time is determined for each axis by the following items; maximum cutting feedrates (parameter "#2002 clamp"); cutting feed acceleration/deceleration time constant (parameter "#2007 G1tL"); cutting feed rates (F); and the interpolation distance (L).
However, the axis of which the acceleration/deceleration time constant is greater than the cutting feed acceleration/deceleration time constant (parameter "#2007 G1tL") is accelerated/decelerated with the cutting feed acceleration/deceleration time constant.

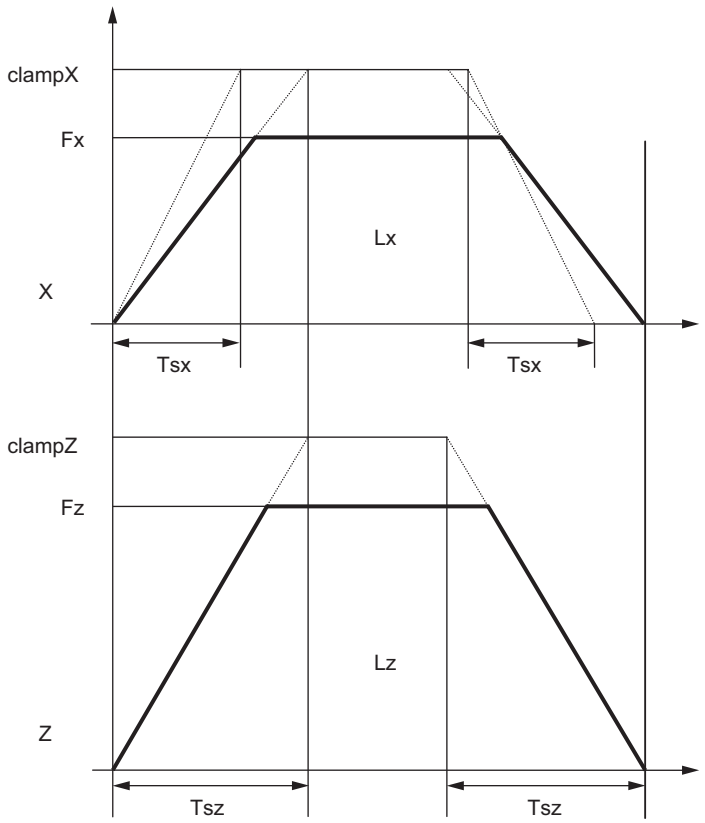


Tsx : X axis acceleration/deceleration time
Tsz : Z axis acceleration/deceleration time
Lx : X axis interpolation distance
Lz : Z axis interpolation distance
Fx : X axis feedrate
Fz : Z axis feedrate

When Tsx < Tsz, the acceleration/deceleration time (Ts) of this block is set to Tsz (acceleration/deceleration time of the Z axis).

**[When the feedrate is so low that the acceleration/deceleration time is shorter than the minimum time constant for constant-gradient acceleration/deceleration]**

Acceleration/deceleration speed is adjusted to prevent the acceleration/deceleration time calculated by the cutting feedrate from going below the minimum time constant.

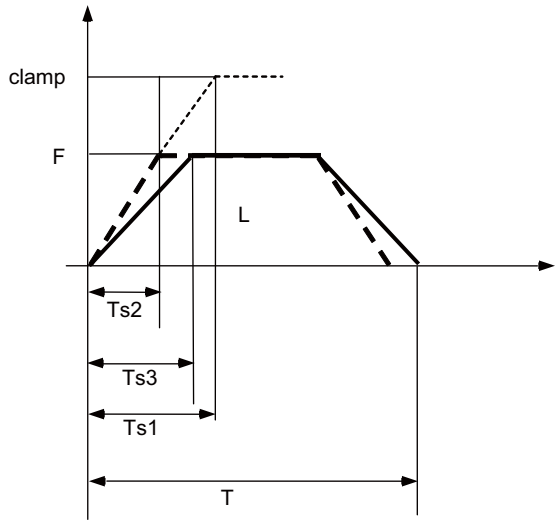


$$T = \frac{L}{F} + 2 \times Ts3$$

clamp : Maximum cutting feedrate (Parameter "#2002 clamp")
F : Cutting feedrate
Ts1 : Acceleration/deceleration time (Parameter "#2007 G1tL")
Ts2 : Acceleration/deceleration time to reach the cutting feedrate
Ts3 : Minimum time for constant-gradient acceleration/deceleration (Parameter "#2199 G1tMin")
T : Interpolation time
L : Interpolation distance

**[When the interpolation distance is so short that the acceleration/deceleration time is shorter than the minimum time constant for constant-gradient acceleration/deceleration]**

Acceleration/deceleration speed is adjusted to prevent the acceleration/deceleration time calculated by interpolation distance from going below the minimum time constant.

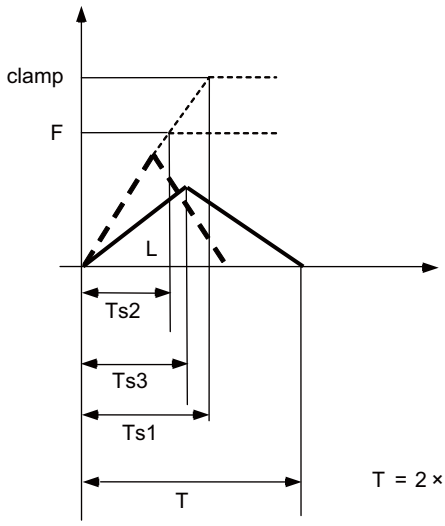


$$T = 2 \times Ts3$$

clamp : Maximum cutting feedrate (Parameter "#2002 clamp")
F : Cutting feedrate
Ts1 : Acceleration/deceleration time (Parameter "#2007 G1tL")
Ts2 : Acceleration/deceleration time to reach the cutting feedrate
Ts3 : Minimum time for constant-gradient acceleration/deceleration (Parameter "#2199 G1tMin")
T : Interpolation time
L : Interpolation distance

## Relationship with other functions

(1) The constant-gradient acceleration/deceleration during dry run is disabled.
When the constant-gradient acceleration/deceleration is valid and the speed is changed by dry run during axis traveling, dry run is disabled in the currently executed block, and the constant-gradient acceleration/deceleration is performed at the same speed as before. Dry run is enabled from the next block, and the manual feedrate is applied. However, the acceleration/deceleration time remains unchanged.
When dry run is enabled and it canceled during axis traveling, dry run is immediately disabled, and the cutting feedrate is applied. After the speed was changed, the constant-gradient acceleration/deceleration is enabled.
When the high-speed machining mode is valid (under G5P2, under G5P10000, etc.), dry run is disabled. However, when the high-speed machining mode is canceled by the positioning command (G00 command) or single block stop command, dry run is enabled.
To enable dry run during the constant-gradient acceleration/deceleration, use the high-accuracy control function (G61.1). Do not use this function.

**[When constant-gradient acceleration/deceleration is enabled and the "Dry run" signal is turned ON during axis traveling]**

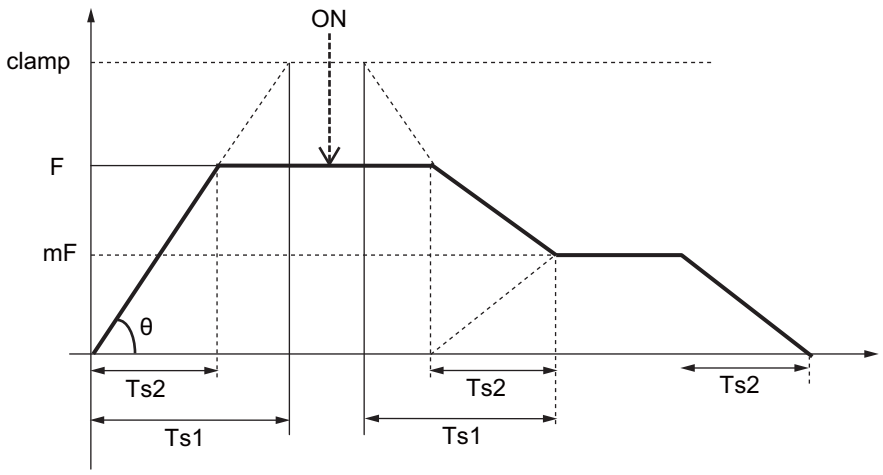


**[When dry run is enabled and the "Dry run" signal is turned OFF during axis traveling]**

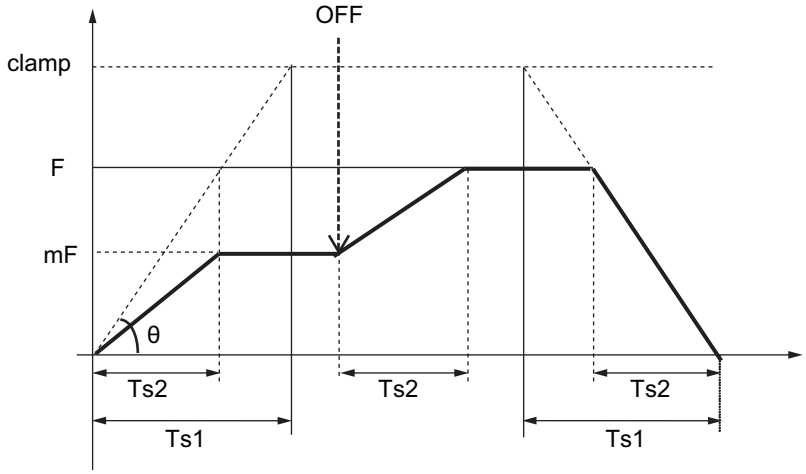


clamp : Maximum cutting feedrate (Parameter "#2002 clamp")
F : Cutting feedrate
mF : Manual feedrate
Ts1 : Acceleration/deceleration time (Parameter "#2007 G1tL")
Ts2 : Acceleration/deceleration time to reach the cutting feedrate
θ : Acceleration/deceleration gradient
ON : "Dry run" signal ON
OFF : "Dry run" signal OFF

(2) The constant-gradient acceleration/deceleration is valid for the linear interpolation command in the fixed cycle. However, the constant-gradient acceleration/deceleration for linear interpolation is invalid for the linear interpolation command in the synchronous tapping cycle.
(The synchronous tapping acceleration/deceleration is enabled.)

### Precautions

(1) If a value greater than 100 (%) is designated for cutting feed override under cutting feed constant-gradient acceleration/deceleration control, the acceleration/deceleration gradient becomes steeper as the feedrate increases.
To use the cutting feed override function at a rate higher than 100%, set the parameter "#1367 G1AccOVRMax" accordingly. (This parameter depends on the MTB specifications.) When the setting of this parameter is between 0 and 99 for "#1367 G1AccOVRMax", the override value is handled as 100% even if the specified cutting feed override is greater than 100%.

(2) If there are one or more NC control axes that are set to soft acceleration/deceleration for G1, the parameter "#1367 G1AccOVRMax" setting will be ignored and the cutting feed override value is handled as 100%.

(3) When "#2003 smgst"(acceleration/deceleration mode) is set to the soft acceleration/deceleration, and "#1219 aux03 bit7: Time constant setting changeover for soft acceleration/deceleration" is set to "1": Acceleration time is obtained by G0tL+G0t1 (G1tL+G1t1)", acceleration/deceleration speed is adjusted to prevent the sum of the 1st step and 2nd step acceleration/deceleration times from going below the minimum time constant for constant-gradient acceleration/deceleration.

(4) When "#2003 smgst" (acceleration/deceleration mode) is set to the soft acceleration/deceleration, if the acceleration/deceleration is shorter than G0tL (or G1tL), the 2nd step time constant will be reduced by the same rate as the 1st step time constant.

(5) If the commanded travel distance in the block is small or the commanded linear interpolation (G01) feedrate is low, acceleration/deceleration time becomes quite short when the constant-gradient acceleration/deceleration method is enabled. Although this does contribute to reduce the cycle time, this can also be a cause of machine vibrations. In these cases, if the minimum time constant for constant-gradient acceleration/deceleration is set in parameter "#2199 G1tMin", it is possible to perform acceleration/deceleration to prevent the acceleration/deceleration time from being below this setting value.
This parameter depends on the MTB specifications.

(6) If the linear interpolation command is continuously executed in two blocks for the same axis during constant-gradient acceleration/deceleration for linear interpolation, the gradient at deceleration becomes greater than the reference value. Therefore, the load of the servo system may increase. Consider so that the speed command (F command value) does not change suddenly.

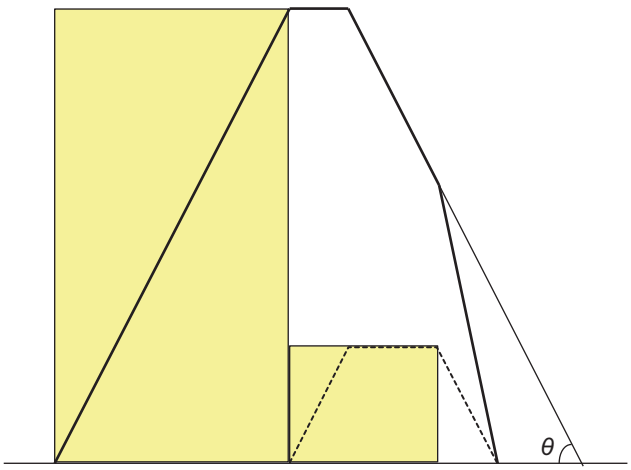


$$\theta = \tan^{-1}\left(\frac{\text{clamp}}{\text{Ts}}\right)$$

θ: Reference value of gradient

## Restrictions

(1) When the linear interpolation command is continuously executed in two or more blocks for the same axis during constant-gradient acceleration/deceleration for linear interpolation, processing of the 3rd block is started after the deceleration processing of the 1st block was completed.

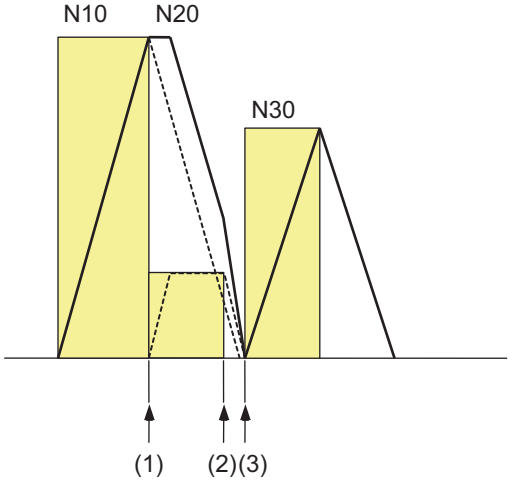


```
:
:
N10 G01 X100. ;
N20 G01 X20. ;
N30 G01 X70. ;
:
:
```

(1) Processing start of 2nd block

(2) Processing of the 3rd block is not started because deceleration processing of the 1st block is not completed.

(3) Processing start of 3rd block

# 7.10 Speed Clamp

## Function and purpose

This function exercises control over the actual cutting feedrate in which override has been applied to the cutting feedrate command so that the speed clamp value which has been preset independently for each axis is not exceeded.

### Note

(1) Speed clamping is not applied to synchronous feed and thread cutting.

# 7.11 Exact Stop Check; G09

## Function and purpose

In order to prevent roundness during corner cutting and machine shock when the tool feedrate changes suddenly, there are times when it is desirable to start the commands in the following block once the in-position state after the machine has decelerated and stopped or the elapsing of the deceleration check time has been checked. The exact stop check function is designed to accomplish this purpose.
A deceleration check is performed when the G09 (exact stop check) command has been designated in the same block. The G09 command is unmodal.
Either the deceleration check time or in-position state is based on the parameter settings specified by the MTB. (Refer to section "7.13 Deceleration Check".)
The in-position width is set in servo parameter "#2224 sv024", "#2077 G0inps" or "#2078 G1inps". This parameter also depends on the MTB specifications.

## Command format

### Exact stop check

```
G09 G01 (G02, G03);
```

The exact stop check command G09 has an effect only with the cutting command (G01 - G03) in its particular block.

## Detailed description

[With continuous cutting feed]

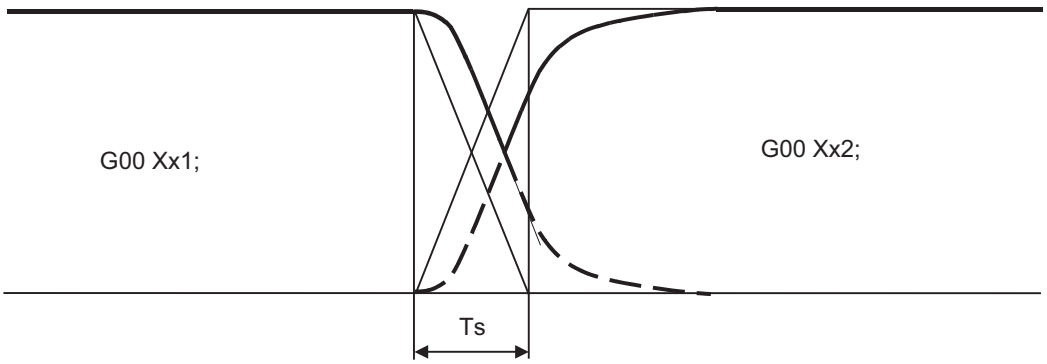


[With cutting feed in-position check]

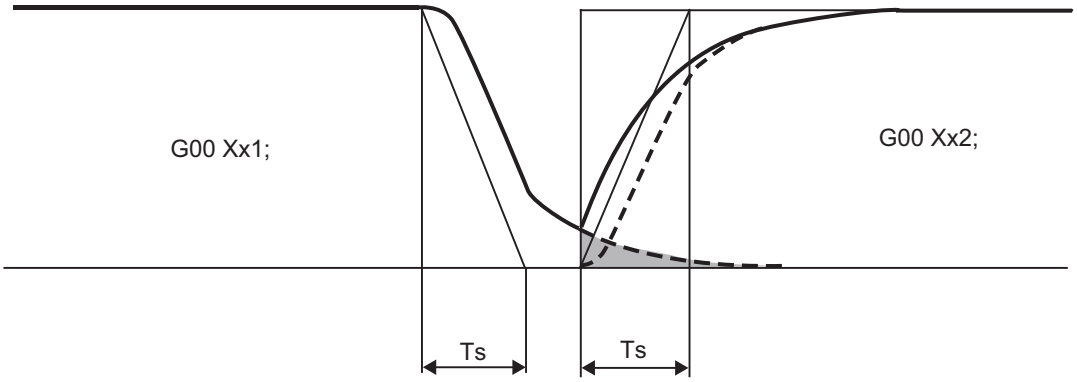


Ts : Cutting feed acceleration/deceleration time constant

In-position width

The in-position width, as shown in the figure above, is the remaining distance (shaded area in the above figure) of the previous block when the next block is started is set in the servo parameter "#2224 sv024". (This depends on the MTB specifications.)
The in-position width is designed to reduce the roundness at the workpiece corners to below the constant value.

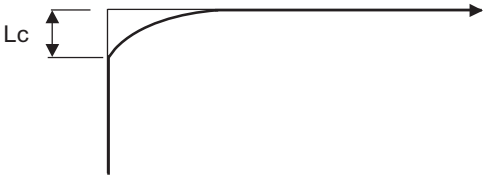


To eliminate corner roundness, set the value as small as possible to servo parameter "#2224 sv024" and perform an in-position check or assign the dwell command (G04) between blocks.
(The parameter setting depends on the MTB specifications.)

### With deceleration check

(1) With linear acceleration/deceleration

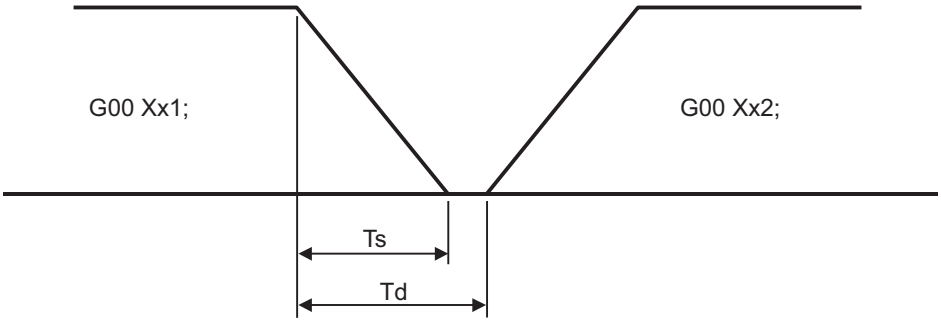


Ts: Acceleration/deceleration time constant  Td: Deceleration check time  Td = Ts + α (0 to 10ms)

(2) With exponential acceleration/deceleration

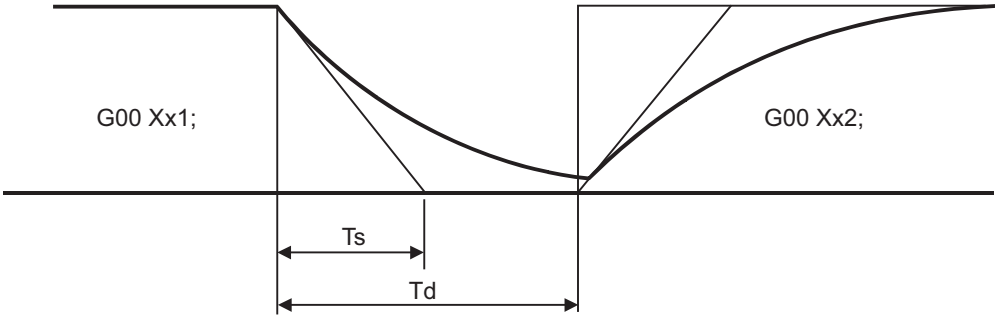


Ts: Acceleration/deceleration time constant  Td: Deceleration check time  Td = 2 x Ts + α (0 to 10ms)

(3) With exponential acceleration/linear deceleration

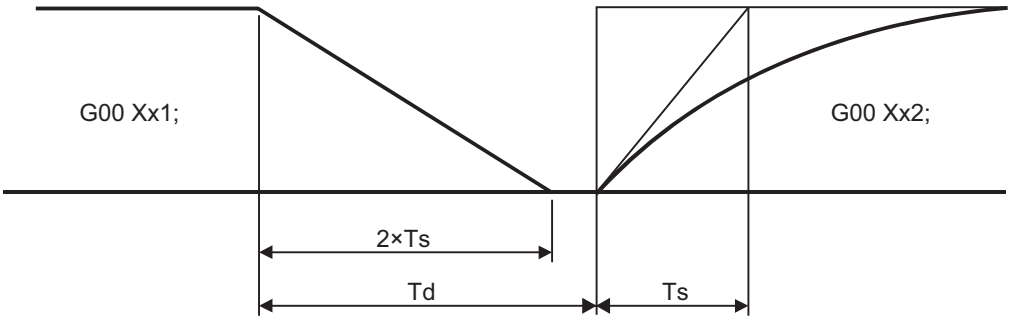


Ts: Acceleration/deceleration time constant  Td: Deceleration check time  Td = 2 x Ts + α (0 to 10ms)

The time required for the deceleration check during cutting feed is the longest among the cutting feed deceleration check times of each axis determined by the cutting feed acceleration/deceleration time constants and by the cutting feed acceleration/ deceleration mode of the axes commanded simultaneously.

**Note**

- To execute exact stop check in a fixed cycle cutting block, insert command G09 into the fixed cycle subprogram.

### Program example

| | |
|---|---|
| N001 G09 G01 X100.000 F150 ; | The commands in the following block are started once the deceleration check time or in-position state has been checked after the machine has decelerated and stopped. |
| N002 Z100.000 ; | |

[Exact stop check result]

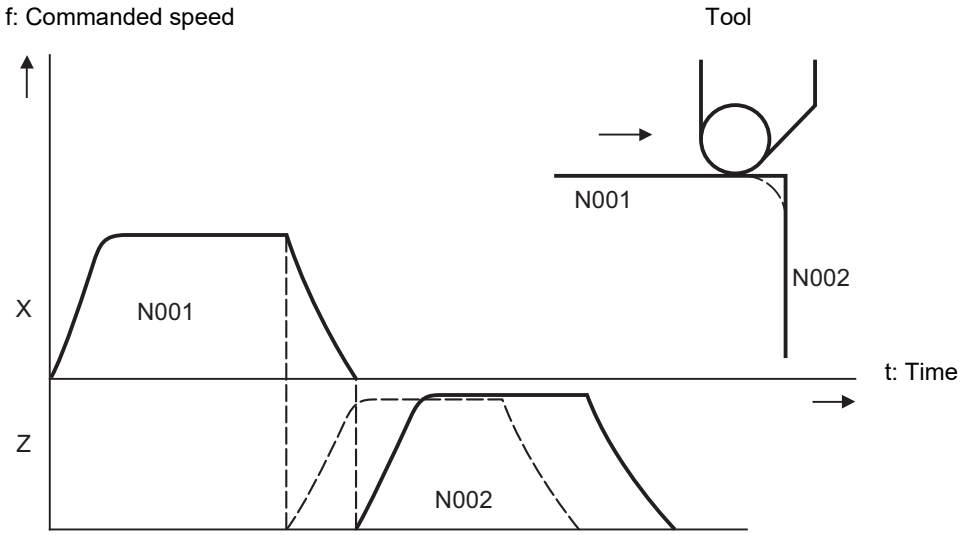


Solid line indicates speed pattern with G09 command
Broken line indicates speed pattern without G09 command

# 7.12 Exact Stop Check Mode; G61

## Function and purpose

Whereas the G09 exact stop check command checks the in-position status only for the block in which the command has been assigned, the G61 command functions as a modal. This means that deceleration will apply at the end points of each block to all the cutting commands (G01 to G03) subsequent to G61 and that the in-position status will be checked.
The modal command is released by the following commands.

G61.1..... High-accuracy control mode

G62 ..... Automatic corner override

G63 ..... Tapping mode

G64 ..... Cutting mode

## Command format

**G61 ; ... Exact stop check mode**

In-position check is executed when the G61 command has been selected, and thereafter, the in-position check is executed at the end of the cutting command block until the check mode is canceled.

# 7.13 Deceleration Check

## 7.13.1 Deceleration Check

### Function and purpose

The deceleration check reduces the machine shock that occurs when the control axis feedrate is suddenly changed and prevents corners from becoming rounded. This is accomplished by decelerating the motor to a stop at axis movement block joints before the next block is executed.

Without deceleration check

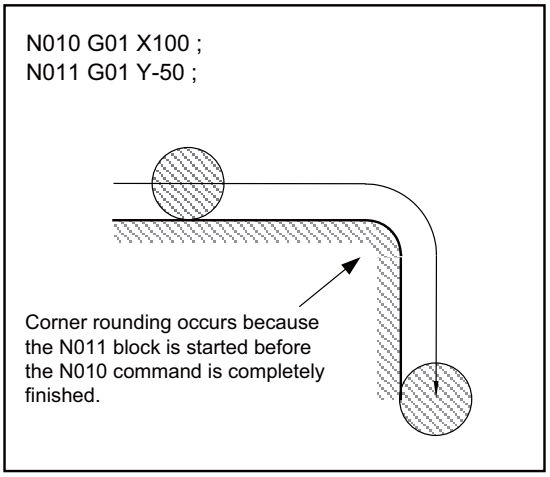


With deceleration check

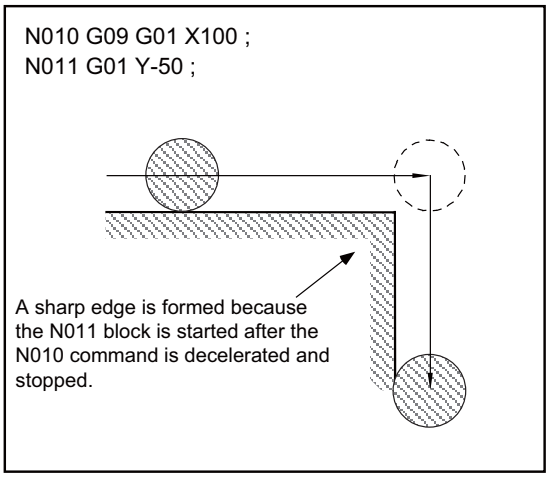


The conditions for executing a deceleration check are described below.

(1) Deceleration check in the rapid traverse mode

In the rapid traverse mode, the deceleration check is always performed when block movement is completed before executing the next block.

(2) Deceleration check in the cutting feed mode

In the cutting feed mode, the deceleration check is performed and the program starts moving the next block when one of the following conditions is satisfied.

(a) When G61 (Exact stop check mode) is selected

(b) When the G09 (Exact stop check) command has been designated in the same block

(c) When the error detect switch (PLC signal) is ON

There are three methods for deceleration check: command deceleration check method, smoothing check method, and in-position check method.
The method that is selected for rapid traverse or cutting feed depends on the MTB specifications (combination of parameters "#1306 InpsTyp", "#1389 G1SmthChk", "#1223 aux07/bit1", and "#1193 inpos").
Depending on the MTB specifications, different deceleration check methods may be used for each feed command during rapid traverse command and cutting feed command (parameter "#1306 InpsTyp").

## Detailed description

### Behavior for each combination of movement commands

| Next block | Current block | | |
|---|---|---|---|
| | G00 | G01 | G00/G01 without movement |
| G00 | ○ | (○) (1)(2) | × |
| G01 | ○ | (○) (1)(3) | × |
| Others | ○ | (○) (1) | × |

○ Deceleration check is performed

(○) (1) A deceleration check is performed when the error detection signal is ON or when G09 or G61 is enabled.

(2) A command deceleration check is performed when G01 => G00 block is specified, "#1502 G0Ipfg" is ON, or the movement reverses to the opposite direction.

(3) A command deceleration check is performed when G01 => G01 block is specified, "#1503 G1Ipfg" is ON, or the movement reverses to the opposite direction.

For the deceleration check when movement in the opposite direction is reversed, refer to "7.13.2 Deceleration Check When Movement in the Opposite Direction Is Reversed".

A deceleration check is not performed if the above conditions are not satisfied.

× Deceleration check is not performed.

### Types of deceleration check

| | |
|---|---|
| (1) Command deceleration check method<br>Deceleration is completed after the deceleration check time (*1) has passed after the interpolation. | 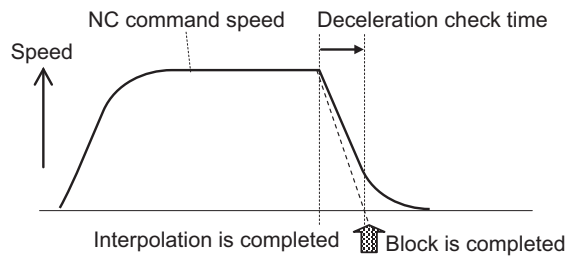 |
| (2) Smoothing check method<br>Deceleration is completed after the deceleration check time (*1) has passed after the interpolation and all axis smoothing has become zero. | 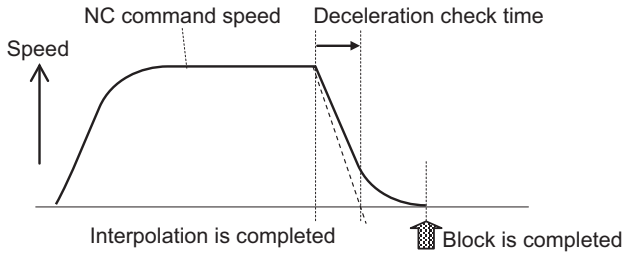 |
| (3) In-position check method<br>The deceleration is completed after the deceleration check time (*1) had passed after the interpolation, all axis smoothing has become zero, and all axes have become in-position. | 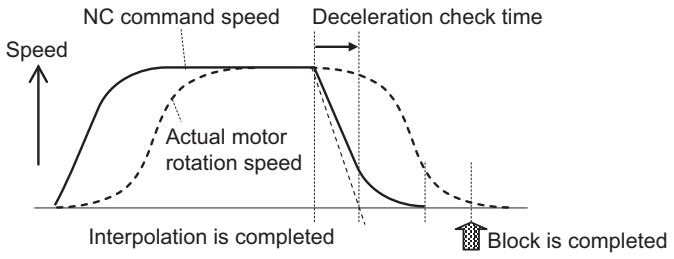 |

(*1) Deceleration check time is automatically calculated from the acceleration/deceleration mode and time constant.

### Selecting deceleration checks (MTB specifications)

(1) When a rapid traverse command (G00/G53) block is to be executed

| Parameters | Deceleration check method | Conditions of deceleration check |
|---|---|---|
| #1193 inpos | | |
| 0 | Command deceleration check method | Deceleration check time has elapsed. |
| 1 | In-position check method | Deceleration check time has elapsed, all axis smoothing has become zero, and all axes have become in-position. |
| 2 | Smoothing check method | Deceleration check time has elapsed, and smoothing zero for all axes. |

(2) When a cutting command (G01/G02/G03) block is to be executed

When parameter "#1306 InpsTyp" is "0", the following occurs (MTB specifications).

| Parameters | | Deceleration check method | Conditions of deceleration check |
|---|---|---|---|
| #1389 G1SmthChk | #1223 aux07/bit1 | | |
| 0 | 0 | Command deceleration check method | Deceleration check time has elapsed. |
| | 1 | In-position check method | Deceleration check time has elapsed, all axis smoothing has become zero, and all axes have become in-position. |
| 1 | - | Smoothing check method | Deceleration check time has elapsed, and smoothing zero for all axes. |

When parameter "#1306 InpsTyp" is "1", the same method as for rapid traverse in (1) is used regardless of the value of parameter "#1389 G1SmthChk".

### Command deceleration check method

Execution of the next block starts after confirming that the deceleration of the command system is completed upon completion of interpolation for one block.
The following explains an example of transition from the current block (rapid traverse) to the next block.
The time required for the deceleration check is the longest among the deceleration check times of each axis determined by the acceleration/deceleration mode and time constants of the axes commanded simultaneously.

(a) For linear acceleration/deceleration

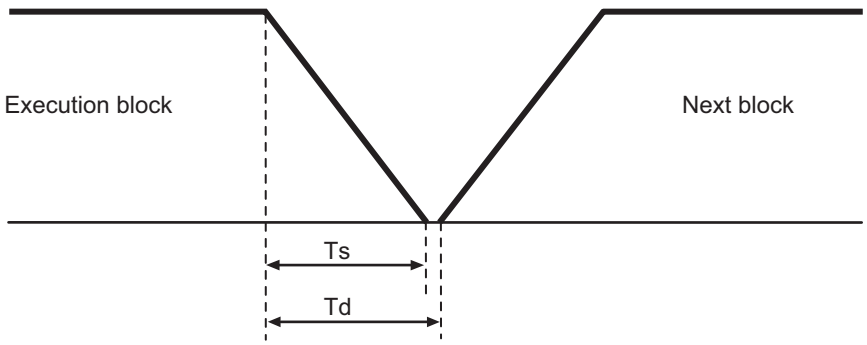


(Ts) Linear acceleration/deceleration time constant
(Td) Deceleration check time: Td = Ts + α (0 to 10 ms)

(b) For exponential acceleration/deceleration

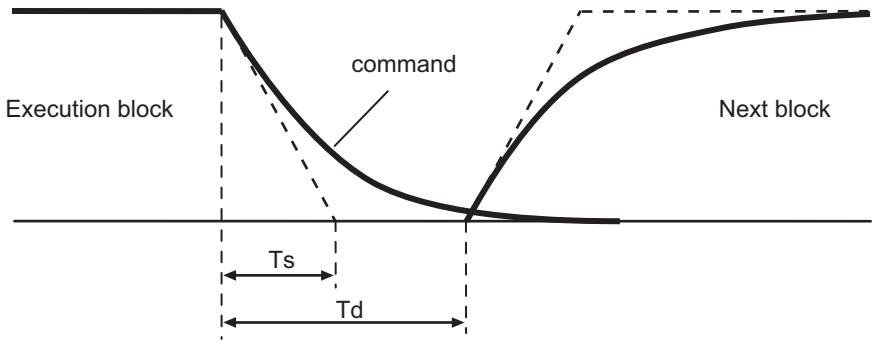


(Ts) Exponential acceleration/deceleration time constant
(Td) Deceleration check time: Td = 2 x Ts + α (0 to 10 ms)

(c) For soft acceleration/deceleration

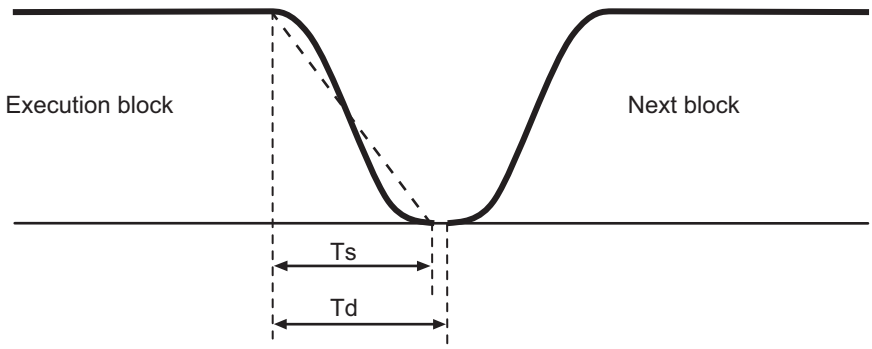


(Ts) Soft acceleration/deceleration time constant
(Td) Deceleration check time: Td = 2 x Ts + α (0 to 10 ms)

### Smoothing check method

Execution of the next block starts after the command deceleration check is performed and after confirming that the smoothing for all axes in the part system has reached zero.

For exponential acceleration/deceleration

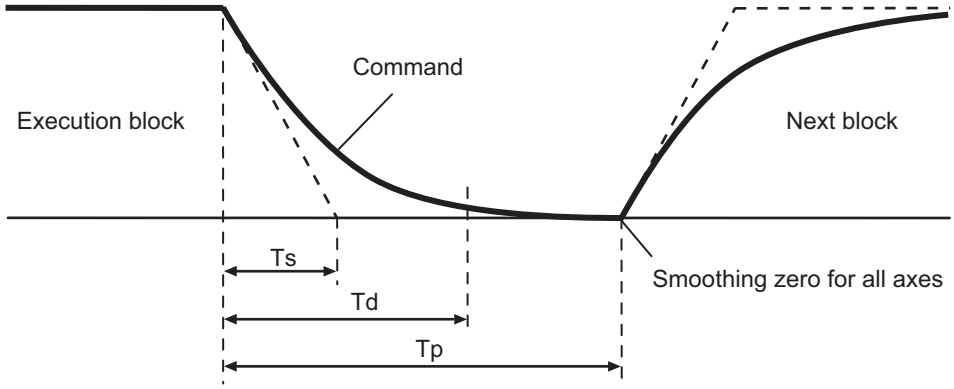


(Ts) Exponential acceleration/deceleration time constant
(Td) Deceleration check time
(Tp) Waiting time for a block to complete

### In-position check method

Execution of the next block starts after the command deceleration check is performed and after confirming that the remaining distances for all axes in the part system are below certain values.
The confirmation of the remaining distance should be done with the imposition width.
The bigger one of the servo parameter "#2224 SV024" or G0 in-position width "#2077 G0inps" (For G01, in-position width "#2078 G1inps"), will be adapted as the in-position width.
(For a rotary axis, the setting value of spindle parameter "#13024 SP024" is assumed to be the in-position width.)

With linear acceleration/deceleration

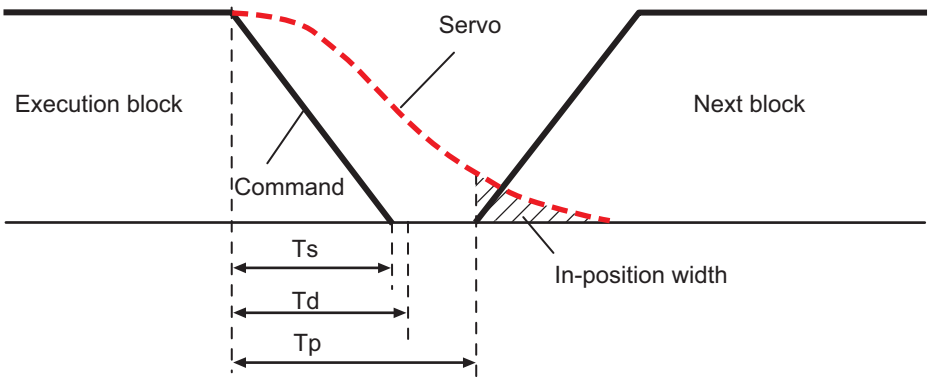


(Ts) Linear acceleration/deceleration time constant
(Td) Deceleration check time
(Tp) Waiting time for a block to complete

As shown in the figure above, the in-position width is the remaining distance from the previous block at the start of the next block. (Shaded area of the figure above).

The purpose of the deceleration check is to minimize the positioning time. The bigger the setting value for the in-position width, the shorter the time is, but the remaining distance of the previous block at the start of the next block also becomes larger, and this could become an obstacle in the actual processing work.
The check for the remaining distance is done at set intervals. Accordingly, it may not be possible to get the effect of time reduction for positioning as in-position width setting value.

(1) In-position check by the G0inps: When SV024 < G0inps (Stop is judged at A in the figure.)

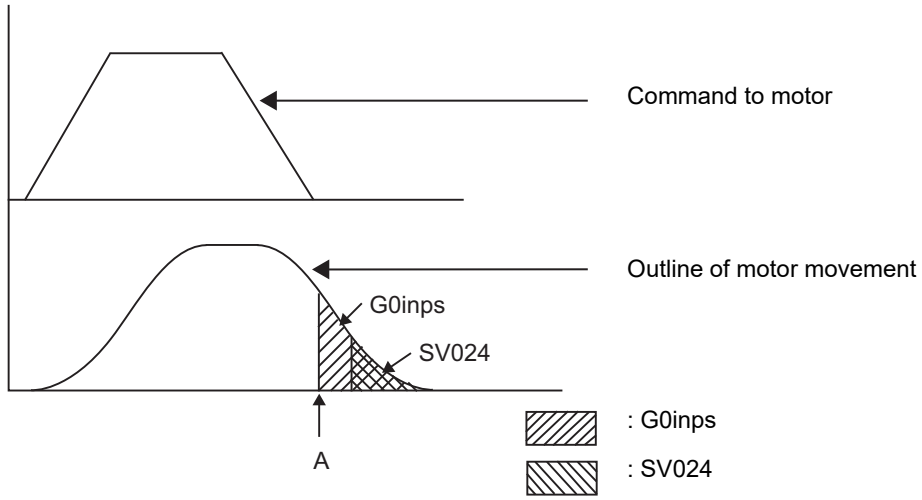


(2) In-position check by the SV024: When G0inps < SV024 (Stop is judged at A in the figure.)

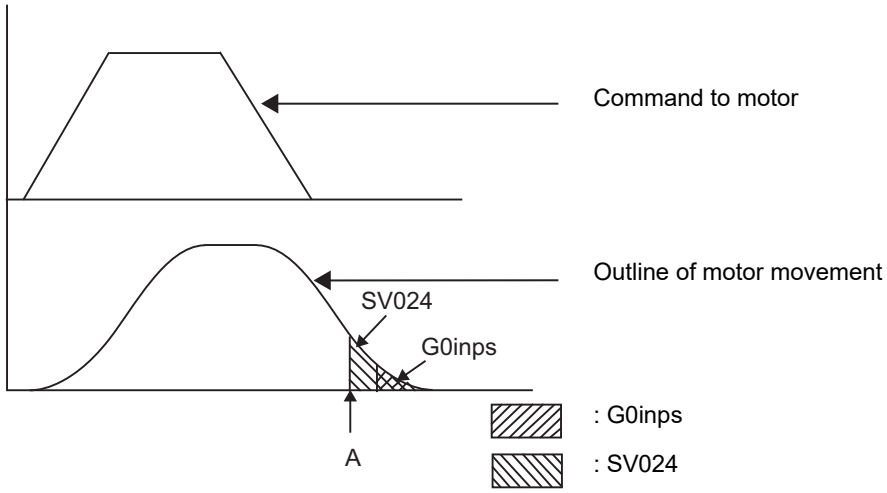

### Programmable in-position width command

This command commands the in-position width for the positioning command from the machining program.

```
G00 X_ Z_(Y_) ,I_ ;
```

| | |
|---|---|
| X,Z(,Y_) | Positioning coordinate value of each axis |
| ,I | In-position width (setting range: 1 to 999999) |

Execution of the next block starts after confirming that the position error amount in the block in which the deceleration check is to be performed is less than the in-position width.
The in-position width specified by parameter (SV024, G0inps (G1inps for G01)) or the one specified in the program, whichever is greater, will be adapted as the in-position width.
When there are several movement axes, the system confirms that the position error amount of each movement axis in each part system is less than the in-position width issued in this command before executing the next block.
For ",I" command, also refer to "6.1 Positioning (Rapid Traverse); G00".

### The differences of In-position check

The differences between the in-position check with parameter and with programmable command are as follows:

(1) In-position check with parameter

After completing deceleration of the command system ("A" in the figure), the servo system's position error amount and the parameter setting value (in-position width) are compared.

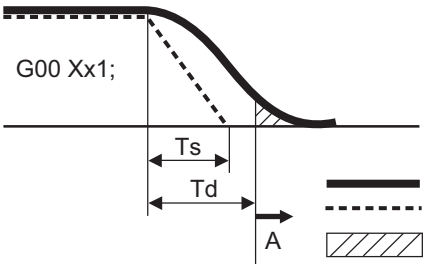


(Ts) Acceleration/deceleration time constant
(Td) Deceleration check time: Td = Ts + α (0 to 10 ms)

Servo machine position
Command
In-position width (Servo system position error amount)

(2) In-position check with programmable command (",I" address command)

After starting deceleration of the command system ("A" in the figure), the position error amount and commanded in-position width are compared.

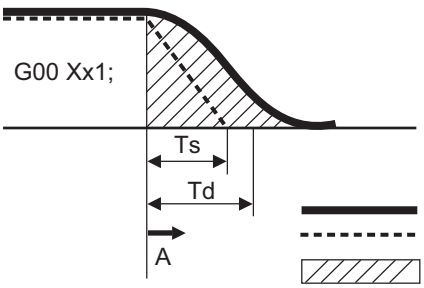


(Ts) Acceleration/deceleration time constant
(Td) Deceleration check time: Td = Ts + α (0 to 10 ms)

Servo machine position
Command
In-position width (Servo system position error amount)

## Relationship with Other Functions

### Tool compensation

The deceleration check acts on the compensated block when tool compensation is performed.

### Control axis synchronization (G125), Control axis superimposition (G126), Arbitrary axis exchange (G140), Arbitrary axis superimposition (G156)

When control axis synchronization (G125), control axis superimposition (G126), arbitrary axis exchange (G140), or arbitrary axis superimposition (G156) takes place in another part system, in a cutting block for a part system where axes related to these function exist, the start of the next block may be delayed.

### Automatic error detection

The automatic error detection is disabled in a block in which deceleration check is enabled.

### High-speed machining mode

When the axis movement reverses to the opposite direction in a G01 → G01 successive block during the high-speed machining mode other than high-speed machining mode I (G05 P1) the commanded deceleration will not take place even if parameter "#1503 G1Ipfg" is set to 1.
Note that the G0Ipfg setting will be followed if the axis direction reverses to the opposite direction in a G01 → G00 successive block.

### High-speed simple program check

A deceleration check is performed even when high-speed simple program check is running. During high-speed simple program checking, the deceleration check time is reduced according to the time reduce coefficient.

## Precautions

(1) When the in-position check is valid, the parameter for the in-position width "#2224 SV024" must be set. (Based on the MTB specifications.)

(2) This function is disabled for an axis to which automatic machine lock is applied.

(3) If MSTB is commanded in the block that follows a cutting command, the MSTB code is output before deceleration is completed in the cutting command. If an MSTB command must be executed after the completion of axis movement, check the PLC signals (DEN) before executing it. (The behavior depends on the MTB specifications.)

(4) If there is an axis in control axis synchronization/superimposition in the part system for which the in-position check method is specified, deceleration is considered to be completed when all axis smoothing has become zero. (Equivalent to smoothing check method)

(5) If thread cutting commands are specified in succession, a deceleration check is not carried out at block joints.

(6) If the parameter "#1205 G0bdcc" is set to "1", the value set with the parameter "#2224 SV024" (in-position detection width) will be used as the in-position width.
The setting of the parameter "#2077 G0inps" (G0 in-position width) and the programmable in-position check with ",I" address are disabled. These parameters depend on the MTB specifications.

## 7.13.2 Deceleration Check When Movement in the Opposite Direction Is Reversed

### Function and purpose

A deceleration check cannot be designated for G01 -> G00 or G01 -> G01, but it can be designated in the following manner only when the movement reverses to the opposite direction in successive blocks.
A deceleration check can also be executed if even one axis is moving in the opposite direction while several axes are interpolating.
For the relation with other functions and precautions, refer to "Deceleration Check".

### Detailed description

**Designating deceleration check for G01 -> G00 opposite direction movement reversal**

If the axis movement reverses to the opposite direction in a G01 to G00 successive block, the deceleration check for the movement in the opposite direction can be changed with the MTB specifications (parameter "#1502 G0Ipfg").

| | Same direction | Opposite direction |
|---|---|---|
| #1502 = 0 | 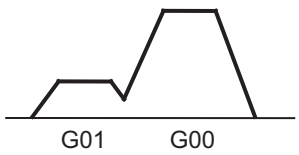 | 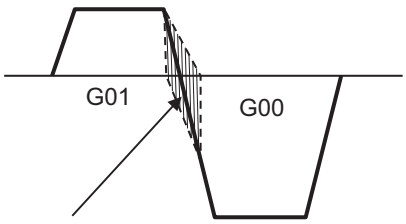 <br>The acceleration rate is excessive due to the G01 and G00 composite speed.<br>Enlarged figure<br> 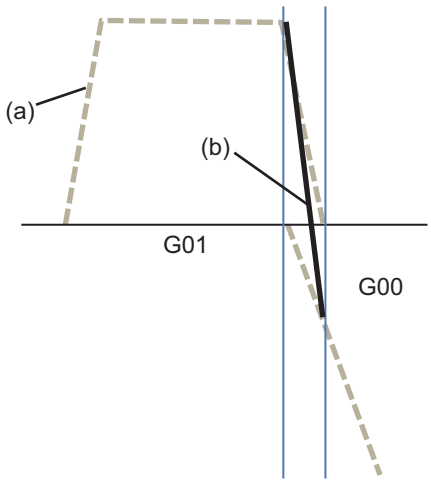 <br>(a) Commanded speed<br>(b) Resultant speed |

| | Same direction | Opposite direction |
|---|---|---|
| #1502 = 1 | 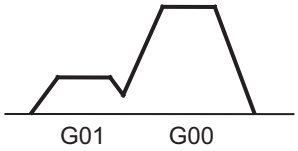 | 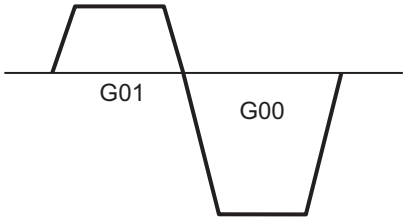 <br>Command deceleration<br>Enlarged figure<br> 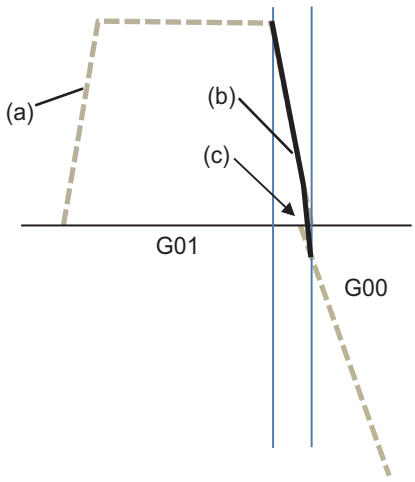 <br>(a) Commanded speed<br>(b) Resultant speed<br>(c) Command deceleration is completed. |

Example of program: When there is a deceleration check in the movement of several axes

(1)

| | |
|---|---|
| G91 G01 X100. Z100. F4000 ;<br>G00 X-100. Z120. ; | A deceleration check is carried out, because the X axis moves in the reverse direction in the program. |

(2)

| | |
|---|---|
| G91 G01 X100. Z-100. F4000 ;<br>G00 X80. Z100. ; | A deceleration check is carried out, because the Z axis moves in the reverse direction in the program. |

(3)

| | |
|---|---|
| G90 G01 X100. Z100. F4000 ;<br>G00 X80. Z120. ; | A deceleration check is carried out, because the X axis moves in the reverse direction in the program.<br>(When the program start position is X0 Z0) |

(4)

| | |
|---|---|
| G91 G01 X100. Z100. F4000 ;<br>G00 X100. Z100. ; | A deceleration check is not carried out, because both the X axis and the Z axis move in the same direction in the program. |

(5)

| | |
|---|---|
| G91 G01 X100. Z80. F4000 ;<br>G00 X80. ; | A deceleration check is not carried out, because the X axis moves in the same direction, and there is no Z axis movement command in the program. |

### Designating deceleration check for G01 -> G01 opposite direction movement reversal

If the axis movement reverses to the opposite direction in a G01 to G01 successive block, the deceleration check for the movement in the opposite direction can be changed with the MTB specifications (parameter "#1503 G1lpfg").

| | Same direction | Opposite direction |
|---|---|---|
| #1503 = 0 | | 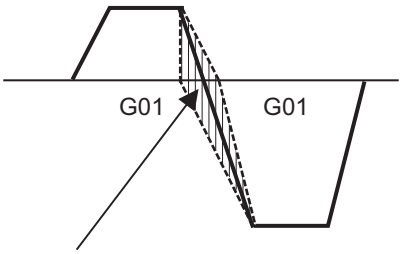 The acceleration rate is excessive due to the G01 and G01 composite speed. |
| #1503 = 1 | 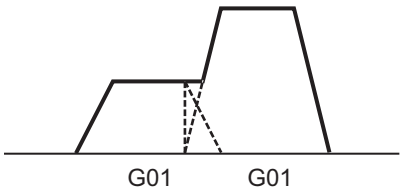 | 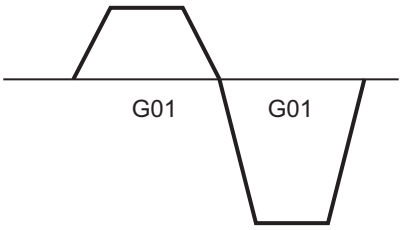 Command deceleration |

Example of program: When there is a deceleration check in the movement of several axes

(1)

| | |
|---|---|
| G91 G01 X100. Z100. F4000 ;<br>G01 X-100. Z120. ; | A deceleration check is carried out, because the X axis moves in the reverse direction in the program. |

(2)

| | |
|---|---|
| G91 G01 X100. Z-100. F4000 ;<br>G01 X80. Z100. ; | A deceleration check is carried out, because the Z axis moves in the reverse direction in the program. |

(3)

| | |
|---|---|
| G90 G01 X100. Z100. F4000 ;<br>G01 X80. Z120. ; | A deceleration check is carried out, because the X axis moves in the reverse direction in the program.<br>(When the program start position is X0 Z0) |

(4)

| | |
|---|---|
| G91 G01 X100. Z100. F4000 ;<br>G01 X100. Z100. ; | A deceleration check is not carried out, because both the X axis and the Z axis move in the same direction in the program. |

(5)

| | |
|---|---|
| G91 G01 X100. Z80. F4000 ;<br>G01 X80. ; | A deceleration check is not carried out, because the X axis moves in the same direction, and there is no Z axis movement command in the program. |

# 7.14 Rapid Traverse Block Overlap; G0.5 P1

## Function and purpose

This function enables the next block to start (overlap) without waiting for positioning (G00) or reference position return (G28/G30).
Consequently, cycle time of machining including operation of positioning (G00) or reference position return (G28/G30) can be reduced.
Adjust the overlap amount according to the command issued by the machining program or with the parameter, and specify it as in-position width for rapid traverse block overlap.
Also, the operation does not decelerate between blocks if the movement command continues in same direction.
The overlap is also valid when G00 is followed by a G01 block, rather than G00 or G28/G30.
It is not invalid when G28 is followed by G00 or G28/G30.
The validity of this function depends on the MTB specifications.

**Example of behavior and velocity waveform 1 (example of application of rapid traverse block overlap in tool change motion)**

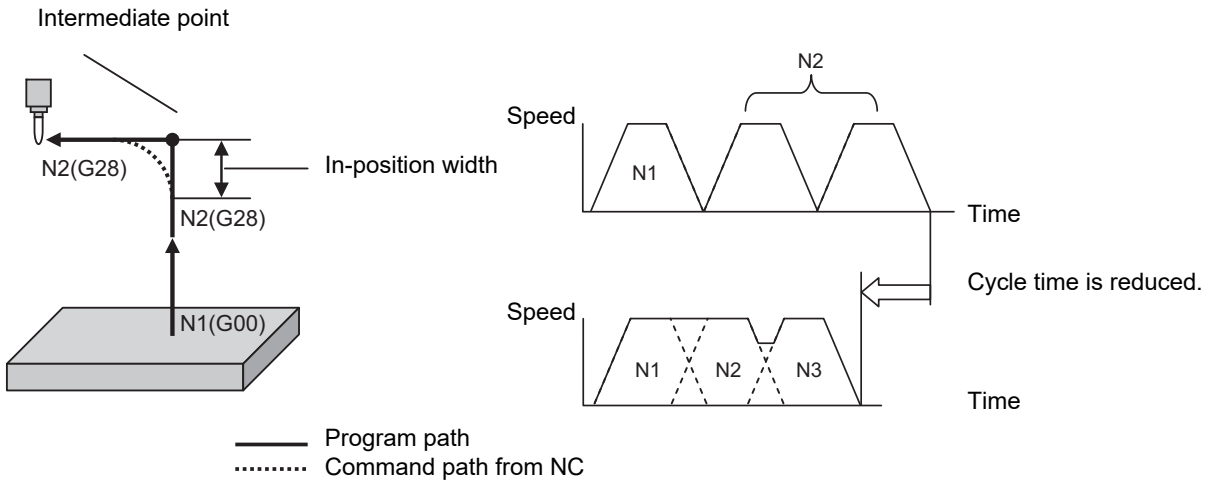


**Example of behavior and velocity waveform 2 (example of application of rapid traverse block overlap in continuous drilling motion)**

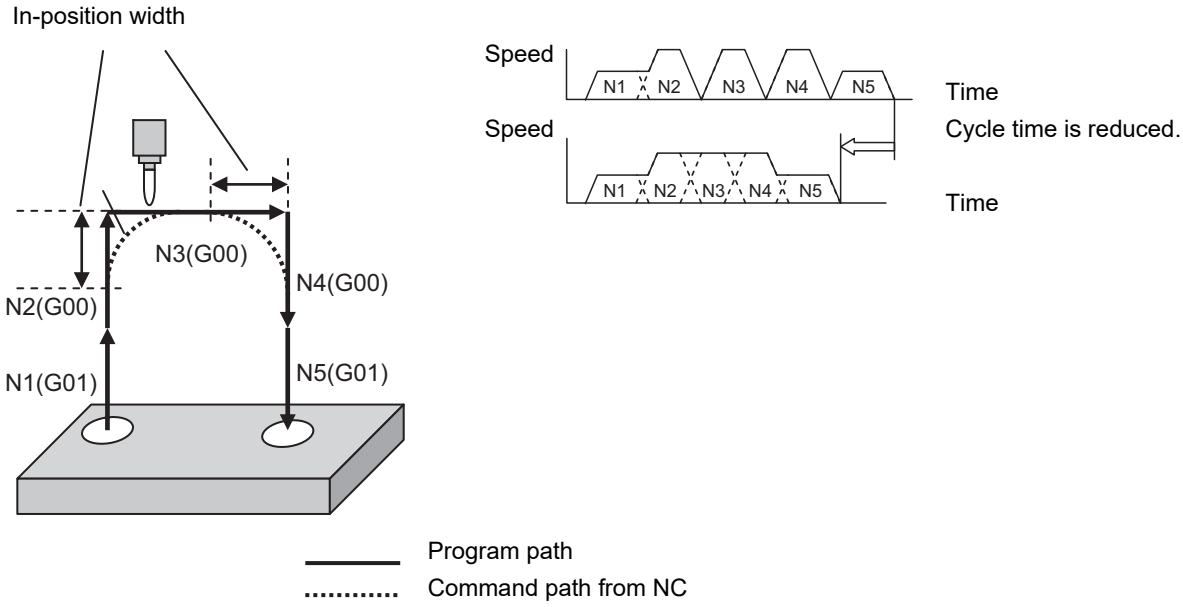

### Deceleration check method using in-position width

For a deceleration check method that uses the in-position width for rapid traverse (G00) or reference position return (G28/G30), a function with a higher priority that is enabled will be applied.
If none of the functions is enabled, the command deceleration is carried out.

| Function<br><br>(Deceleration check method) | Enabling conditions | Deceleration Check<br>Enabled behavior | Priority |
|---|---|---|---|
| Programmable in-position | Valid when the in-position width is designated with address ",I" in the same block as G00.<br>(It is valid only for a block in which address ",I" is specified.)<br>(For details, refer to "6.1 Positioning (Rapid Traverse); G00" and "7.13 Deceleration Check".) | G00 | 1 |
| Rapid traverse block overlap (this function) | (1) For G00<br>Parameter "#1442 G0ol" must be "1" and G00 rapid traverse block overlap must be valid modal code (G0.5P1).<br>(2) For G28/G30<br>Parameter "#1443 G28ol" must be "1". | G00/G28/G30 | 2 |
| In-position check by parameter settings | Parameter "#1193 inpos" must be "1".<br>(For details, refer to "7.13 Deceleration Check".) | G00 | 3 |

For G00 overlap, refer to "7.14.1 Rapid Traverse Block Overlap for G00; G0.5". For G28/G30 overlap, refer to "7.14.2 Rapid Traverse Block Overlap for G28".

## 7.14.1 Rapid Traverse Block Overlap for G00; G0.5

### Function and purpose

This function enables the next block to start (overlap) without waiting for the deceleration completion at the joint between blocks in the G00-G00 command, G00-G01 command and G01-G00 command (*1). This reduces the cycle time of machining including the G00-G00 command, G00-G01 command and G01-G00 command. (*2)
This function has two modes. The modes can be selected with the parameter "#1711 cfg11/bit2". (This depends on the MTB specifications. This is available in the M800/M80 Series S/W version F8 or later.)

| #1711 cfg11/bit2 | Details |
|---|---|
| 0 (mode 1) | The cycle time can be reduced in normal acceleration/deceleration control (*3). |
| 1 (mode 2) | It is also effective to reduce the cycle time in pre-interpolation acceleration/deceleration control. It is recommended to normally use the mode 2. |

(*1) In the G01-G00 command, overlap is performed only in the mode 2 and high-accuracy mode.

(The high-accuracy mode means all of high-speed high-accuracy control I/II and high-accuracy control (G05.1 and G61.1).)

(*2) Cycle time reduction may not be guaranteed in every case.

(*3) Pre-interpolation acceleration/deceleration is an acceleration/deceleration control method appropriate to high-accuracy machining.

In the following cases, G00 is operated in pre-interpolation acceleration/deceleration.

- The high-speed high-accuracy control mode is selected, and "#8090 SSS ON" is set to "1".
- "#1086 G00 interp OFF" is set to "0", and "#1205 G0bdcc" (Acceleration and deceleration before G0 interpolation) is not "0".

For the rapid traverse block overlap function, also refer to "7.14 Rapid Traverse Block Overlap; G0.5 P1".
G28/G30 can be overlapped when the rapid traverse block overlap for G28 is enabled. For details, refer to "7.14.2 Rapid Traverse Block Overlap for G28".

### Command format

**Starting rapid traverse block overlap for G00**

```
G0.5 P1 J_ K_;
```

| | |
|---|---|
| P | Starting or canceling the rapid traverse block overlap function (0: Cancel, 1: Start) |
| J | Linear axis in-position width (0.000 to 1000.000 (mm)) |
| K | Rotary axis in-position width (0.000 to 1000.000 (°)) |

**Canceling rapid traverse block overlap for G00**

```
G0.5 P0;
```

#### Note

(1) The program error (P33) occurs when this command is not issued alone in a block.
(2) This block can be specified simultaneously with an N code (sequence number).
(3) The in-position width at joints between two blocks containing G28/G30 cannot be changed with G0.5P1 command.
(4) G0.5P1 and G0.5P0 are modal.
(5) Address J in G20 must be programmed in inches.

(6) If an address is omitted, the width determined by the MTB specifications becomes valid. (Parameters "#2224 SV024" and "#13024 SP024")
If a value less than the width determined by the MTB is specified, that width becomes valid.

(7) If address J or K is set to "0", the conventional deceleration check is performed.

## Detailed description

### Enabling conditions

The rapid traverse block overlap function for G00 becomes effective when all of the following conditions are satisfied.

(1) The rapid traverse block overlap for G00 is enabled.
Refer to the MTB specifications (parameter "#1442 G0ol").

(2) G0.5P1 modal must be active.
To make G0.5P1 modal active:

- Specify a G code (G0.5P1) in which rapid traverse block overlap is enabled in the machining program.
- Set parameter "#12056 I_G0oL G00" to "1" (valid).

| | |
|---|---|
| N1 G0.5 P1; | Rapid traverse block overlap function: Enabled |
| N2 G91 G00 X10.; | |
| N3 G00 X20.; | |
| N4 G0.5 P0; | Rapid traverse block overlap: Invalid |
| : | |

### Motion subject to rapid traverse block overlap

(1) Mode 1

When the rapid traverse block overlap for G00 is enabled, a G code (positioning (G00) or linear interpolation (G01)) following positioning (G00) may not be subject to rapid traverse block overlap depending on the current control mode or parameter settings that are specified by the MTB. (Parameters "#1086 G0intp" and "#1205 G0bdcc")
Refer to the table below for details.

| Control mode | Parameter | | G code following positioning (G00) | |
|---|---|---|---|---|
| High-accuracy mode | #1086 | #1205 | G00 | G01 |
| OFF | 0 | 0 | ○ | ○ |
| | | 1 | ○ | × |
| | | 2 | ○ | × |
| | 1 | 0/1/2 | ○ | ○ |
| ON | 0 | 0 | ○ | × |
| | | 1 | ○ | × |
| | | 2 | ○ | × |
| | 1 | 0/1/2 | ○ | × |

○: Subject to rapid traverse block overlap for G00

×: Not subject to rapid traverse block overlap for G00

<Note>

- When executing a rapid traverse block overlap in G00 multi-step acceleration/deceleration, the next block (N2 in the following program) will be started after the deceleration at the last step in the execution block (N1) has started.
  The hatched area in the figure below is an area in which the in-position width can be specified.

**N1 G91 G00 X10.;**
**N2 X10.;**

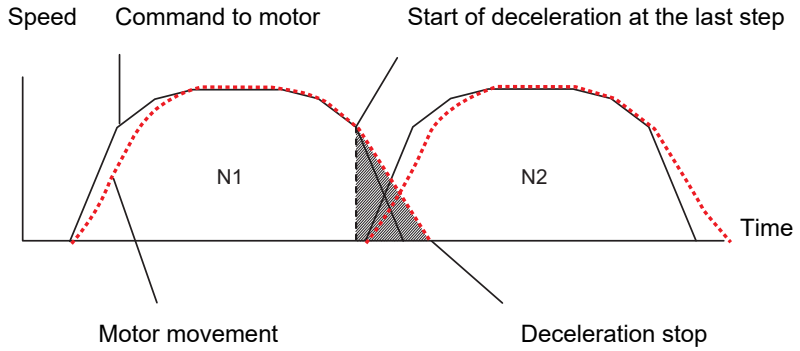


(2) Mode 2 [M8]

Only in the mode 2 and high-accuracy mode, the positioning (G00) commanded following the linear interpolation (G01) is subject to rapid traverse block overlap. It may not be subject to rapid traverse block overlap depending on the current control mode or parameter settings specified by the MTB. Refer to the table below for details.

| Control mode | Parameter | | | G code following positioning (G00) | | G code following linear interpolation (G01) | |
|---|---|---|---|---|---|---|---|
| High-accuracy mode | #8090 (SSS ON) | #1086 (G0intp) | #1205 (G0bdcc) | G00 | G01 | G00 | G01 |
| OFF | 0/1 | 0 | 0 | ○ | ○ | × | × |
| | | | 1 | ○ | × | × | × |
| | | | 2 | × | × | × | × |
| | | 1 | 0/1/2 | ○ | ○ | × | × |
| ON | 0 | 0 | 0 | ○ | × | × | × |
| | | | 1 | ○ | ○ | ○ | × |
| | | | 2 | × | × | × | × |
| | | 1 | 0/1/2 | ○ | × | × | × |
| | 1 | 0 | 0 | ○ | ○ | ○ | × |
| | | | 1 | ○ | ○ | ○ | × |
| | | | 2 | × | × | × | × |
| | | 1 | 0/1 | ○ | ○ | ○ | × |
| | | | 2 | × | × | × | × |

○: Subject to rapid traverse block overlap for G00

×: Not subject to rapid traverse block overlap for G00 (Operates with the conventional deceleration check function.)

(3) Common to mode 1 and mode 2

This function is valid even in a fixed cycle, subprogram or macro program.
(If the in-position width is specified in a fixed cycle command, that value is given priority.)

In addition, this function is valid if positioning (G00) is followed by the subprogram call command or macro call command block when the rapid traverse block overlap for G00 is enabled.

### Adjustment of start position of overlap

The start position of overlap when a rapid traverse block overlap for G00 is executed can be adjusted with the in-position width. The next block is started when the remaining distances of all movement axes in the current movement block are smaller than the in-position width. (Refer to following figure.)
When setting the in-position width with J and K commands, set a value for each linear and rotary axis. Setting the in-position width for axes with parameter settings depend on the MTB specifications (parameter "#2631 G0olinps").

The start position of the next block based on the remaining distance and in-position width for each movement axis is shown below.
This shows an example of when the X axis in-position width is set to 0.5 mm and the Y axis in-position width to 1 mm.

**(a) For X axis**

**Program example**

```
N1 G91 G00 X50.;
N2 Y50.;
```

**Operation**

Start position of N2 block

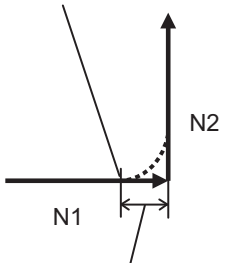


X axis in-position width = 0.5 mm

**(b) For Y axis**

**Program example**

```
N1 G91 G00 Y50.;
N2 X-50.;
```

**Operation**

Y axis in-position width = 1 mm

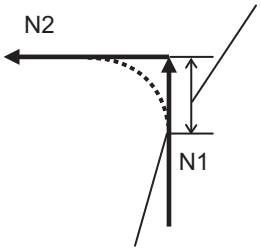


Start position of N2 block

**(c) For X and Y axes**

**Program example**

```
N1 G91 G00 X50. Y50.;
N2 X-50. Y50.;
```

**Operation**

If the position error amount is smaller than the in-position width for both of the X and Y axes, the next block is started.

If the Y axis position error amount is smaller than the in-position width, but the X axis position error amount is larger than that width, the next block is not started.

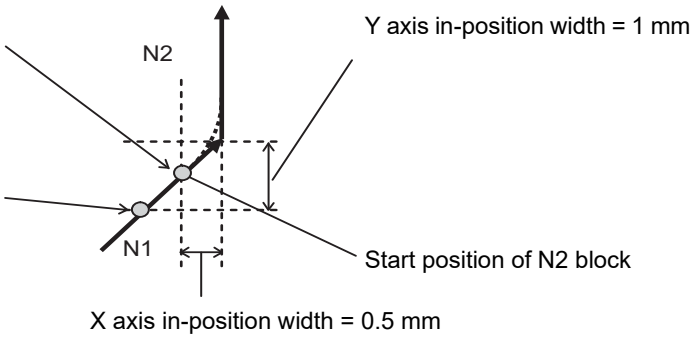

The in-position width is determined by the G code address or parameter value.

(1) When specifying the in-position width with a G code, the one specified with address J/K becomes effective. Note that if address J or K is set to "0", the rapid traverse block overlap is disabled.

(2) If a command with address J/K is omitted, the in-position width determined for each of positioning and cutting feed by the MTB specifications becomes effective. (Parameters "#2631 G0olinps" and "#2632 G1olinps")

(a) Positioning (G00) - Positioning (G00): Parameter "#2631 G0olinps"

(b) Positioning (G00) - Cutting feed (G01) (high-accuracy mode is OFF): Parameter "#2632 G1olinps" (*1)

(*1) Positioning (G00) - Cutting feed (G01) may not be subject to rapid traverse block overlap depending on the current control mode or parameter settings specified by the MTB. Refer to "Motion subject to rapid traverse block overlap" for details.

## Upper and lower limits for in-position width

(1) Upper limit for in-position width

When rapid traverse block overlap is enabled, the in-position check is performed after starting deceleration specified in the speed command ("A" in the figure). Thus, the distance from the servo machine position after starting the command deceleration to the commanded position (hatched area in the figure below) is the upper limit for the actual in-position width.

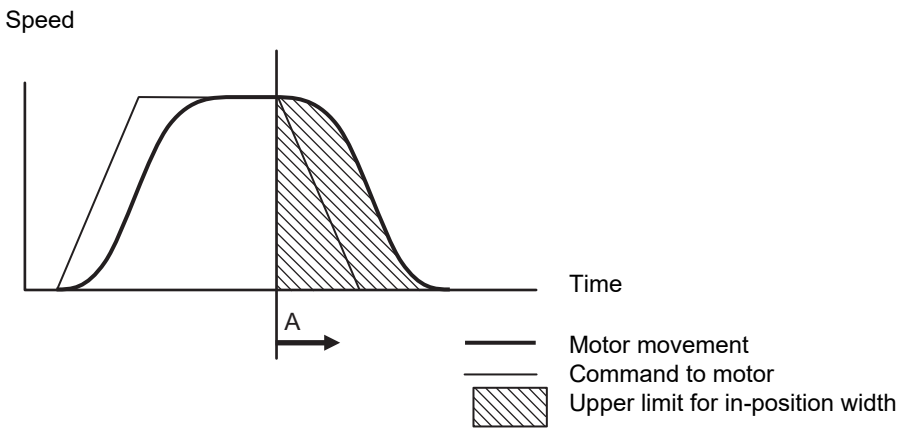


(2) Lower limit for in-position width

The lower limit for the in-position width depends on the MTB specifications (parameters "#2224 SV024" and "#13024 SP024").

The value of this parameter is applied even if a value less than or equal to this parameter is specified as an in-position width.

## Compensation for in-position width based on the path

The conventional deceleration check (in-position check method) applies the same in-position width regardless of the path (corner angle). Therefore, an extra speed change occurs and cycle time is increased even though path direction stays almost the same. The rapid traverse block overlap automatically compensates for the in-position width based on the path (corner angle).

However, the in-position width is not compensated for based on the path if a block without a movement command is inserted between the movement commands to be overlapped.

(1) If the angle is greater than 90°, the rapid traverse block overlap function is temporarily canceled.

(2) If the angle is less than 90°, the in-position width is compensated for so that it matches the amount of droop at a corner when the corner angle is 90°.

## Program example

### When the in-position width is specified with address J (G0.5P1 J_)

The following are examples of using G00 rapid traverse block overlap in combination with G00 (rapid traverse) and G01 (cutting feed). (When the high-accuracy control mode is OFF)

| Parameter setting | X axis | Z axis |
|---|---|---|
| #2631 (G0olinps) | 2 mm | 1.5 mm |
| #2632 (G1olinps) | 1 mm | 0.5 mm |

```
N1 G0.5P1 J1.0;
N2 G91 G01 Z25.;
N3 G00 Z25.;
N4 G00 Z50.;
N5 G00 X125.;
N6 G00 Z-75.;
N7 G01 Z-25. F1000.;
```

Z axis in-position width is set to 1 mm with the J address command.

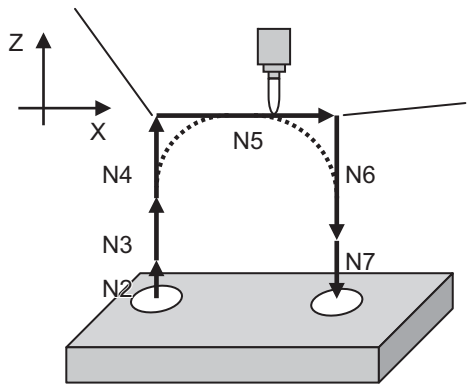


X axis in-position width is set to 1 mm with the J address command.

Program path

Command path from NC

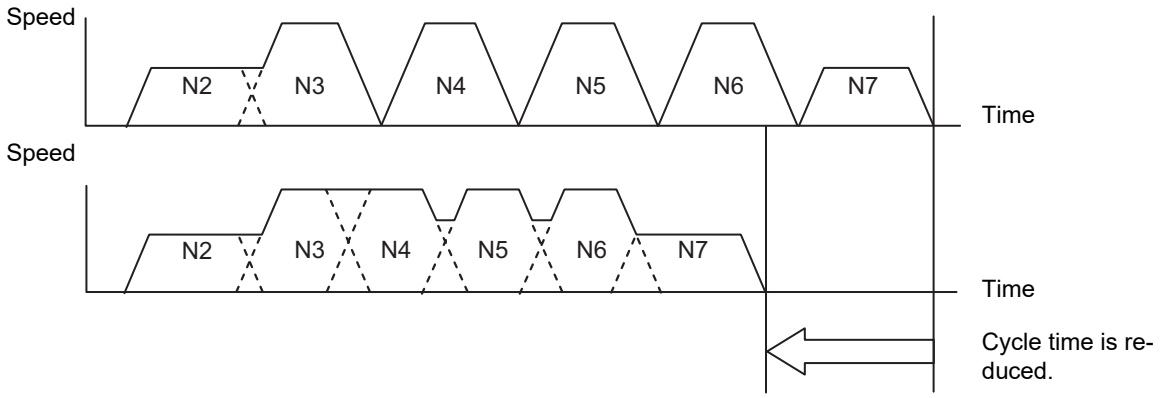

### Example behavior in fixed cycle

When specifying G00 (positioning) -> G84 (tapping cycle)

| (Main program) | (G84 program) |
|---|---|
| N10 G0.5 P1; | (Same for N40 block) |
| N20 G91 G98 G64 G00 Z-25.; | N31 G00 X50. Y0.; |
| N30 G84 X50. Y0. Z-25. R-25. F1000. P1. ,R1 S1000. ,S1000. L1.; | N32 G00 Z-25.; |
| N40 X50.; | N33 G01 Z-25. F1000.; |
| N50 G00 X50. ; | N34 G01 Z25.; |
| | N35 G00 Z25.; |

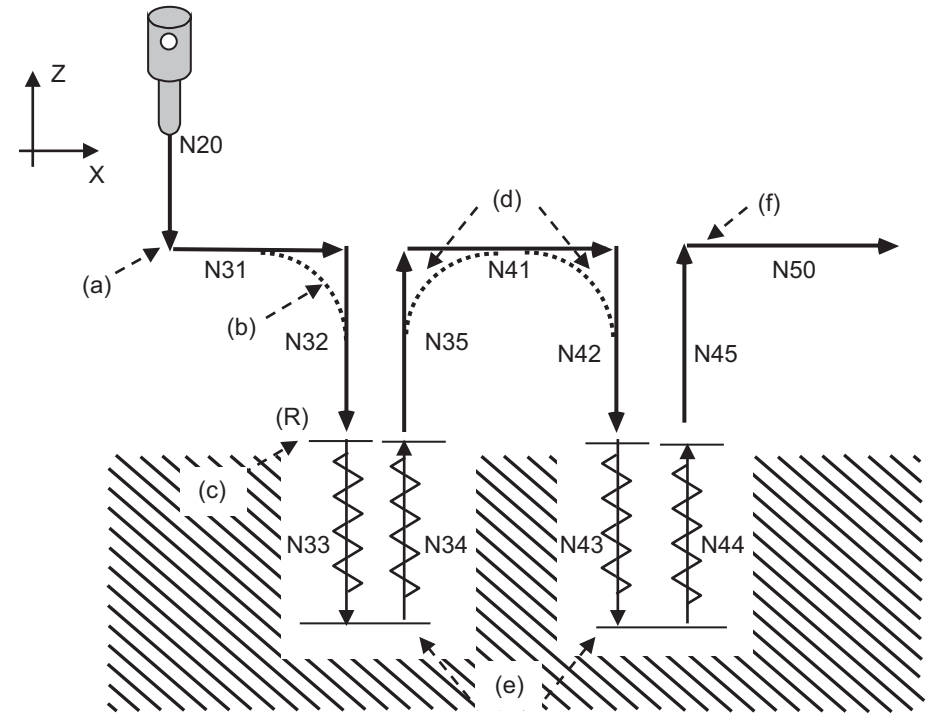


Program path

Command path from NC

(a) Not subject to rapid traverse block overlap (Rapid traverse overlap is invalid at the start of synchronous tapping cycle.)

(b) Subject to rapid traverse block overlap (*1)
(Rapid traverse block overlap function is invalid in the mode 2 and S address command.)

(c) Not subject to rapid traverse block overlap (Rapid traverse block overlap function is invalid at cutting with tapping in synchronous tapping cycle.)

(d) Subject to rapid traverse block overlap (*1)

(e) Not subject to rapid traverse block overlap

(f) Not subject to rapid traverse block overlap (Rapid traverse block overlap is invalid at the end of synchronous tapping cycle.)

(*1) When G00 is operated in pre-interpolation acceleration/deceleration, rapid traverse block overlap function is invalid.
However, in some of the fixed cycles for drilling, the acceleration/deceleration after interpolation can be applied to the acceleration/deceleration type during the fixed cycle by setting the parameter "#1253 set25/bit2" to "1". Only in this case, the rapid traverse block overlap function during the fixed cycle can be valid even when G00 is operated in pre-interpolation acceleration/deceleration.
Refer to "13.5.12 Acceleration/Deceleration Mode Change in The Fixed Cycle for Drilling" for the target fixed cycles.

## Relationship with other functions

### Programmable in-position

If an ",I" address command is used to specify the in-position width from the program when the rapid traverse block overlap is enabled, the in-position width of programmable in-position is given priority.
Because the programmable in-position is an unmodal command, the in-position width specified with the rapid traverse block overlap enabled is assumed for commands following ",I" address.
This shows an example of when the X and Y axis in-position widths for G00 are set to 1 mm by parameters.

| | |
|---|---|
| N1 G0.5 P1; | G0.5 command (for G00) |
| N2 G91 G00 X50.; | Subject to rapid traverse block overlap for G00 |
| N3 Y50. ,I1.5; | ",I" address command is valid |
| N4 X50.; | Subject to rapid traverse block overlap for G00 |
| N5 Y50.; | |
| : | |

In-position width: 1.5 mm
(",I" address command is given priority.)

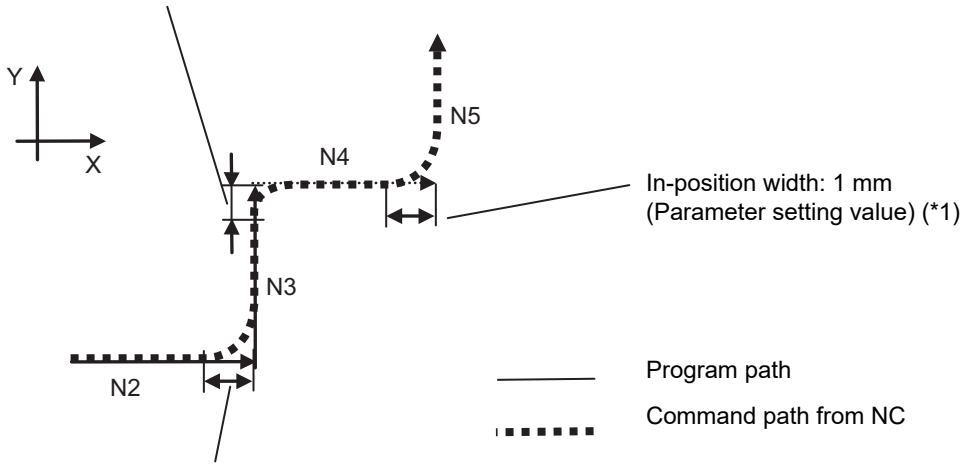


In-position width: 1 mm
(Parameter setting value) (*1)

(*1) The in-position width is the parameter setting value because the programmable in-position is an unmodal command.

### Note

(1) The programmable in-position (",I" command) for G00 pre-interpolation acceleration/deceleration can only be used when the rapid traverse block overlap is enabled.

(2) When G00 is followed by a block without a movement command, a command of address ",I", if specified for G00, is handled as a command specifying a rapid traverse block overlap. Therefore, the overlap takes place only when overlapped movements are executed.

### Deceleration check

When the rapid traverse block overlap is enabled, the conventional deceleration check is disabled for the behavior subject to this function.
When the rapid traverse block overlap is disabled, the conventional deceleration check is enabled.
This shows an example of when the X and Y axis in-position widths for G00 are set to 1 mm by parameters.

| | |
|---|---|
| N1 G0.5 P1; | G0.5 command (for G00) |
| N2 G91 G00 X50.; | Subject to rapid traverse block overlap for G00 |
| N3 Y50.; | Deceleration check is valid. |
| N4 G0.5 P0; | |
| N5 X50.; | Deceleration check is valid. |
| N6 Y50.; | Deceleration check is valid. |
| : | |

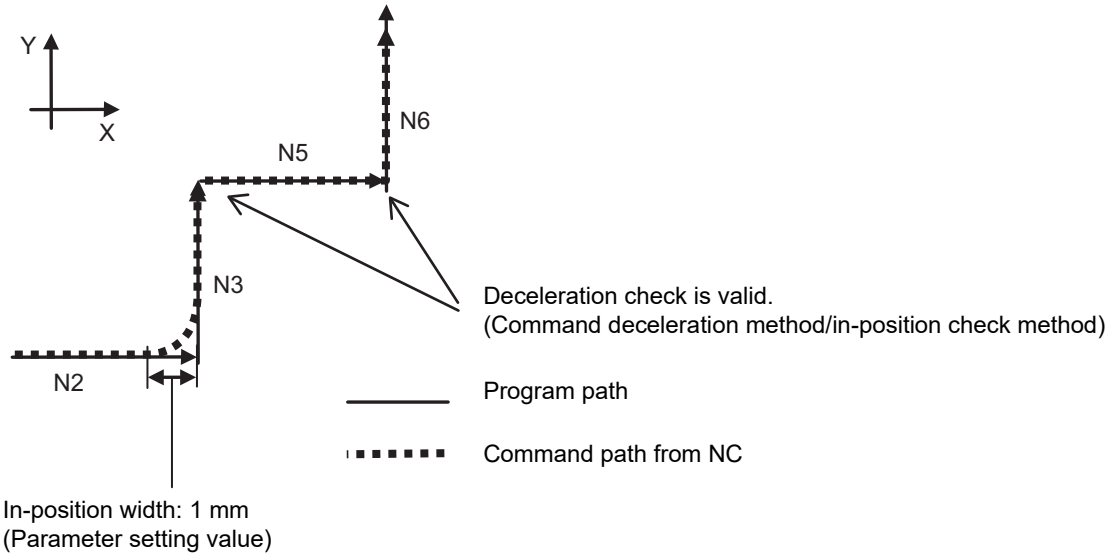

### Tool compensation

In the block where the compensation amount of the tool compensation function below is changed, rapid traverse block overlap is not performed at either of the start point or the end point.

- Tool length offset
- Tool radius compensation
- 3-dimensional tool radius compensation
- Tool function (T command)
- Nose R compensation

The following example shows a case in which the Z axis length compensation amount of tool number 1 is 50 mm.

| | |
|---|---|
| N1 G0.5 P1; | G00 rapid traverse block overlap valid command |
| N2 G91 G00 X50.; | |
| N3 G43 H1; | Tool length offset valid |
| N4 G00 X50.; | |
| N5 G00 Z-50.; | |
| N6 G00 X50.; | |
| N7 G49 ; | Tool length offset invalid |
| N8 G00 X50.; | |
| N9 G0.5 P0; | |

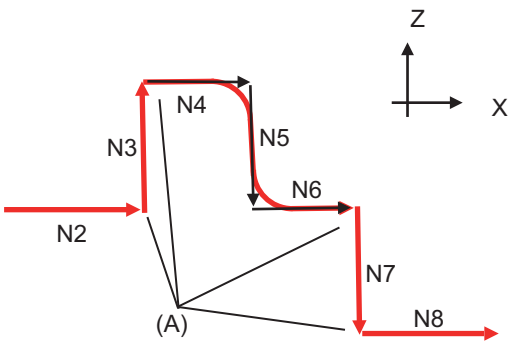


(A) These are the start and end points of movement where the compensation amount is changed by G43/G49; therefore, the rapid traverse block overlap function is invalid.

### Precautions

(1) When a block without a movement command is inserted between blocks (N1 and N2) that are subject to the rapid traverse block overlap, whether to perform the rapid traverse block overlap depends on the acceleration/deceleration mode of the N1 block. When the acceleration/deceleration mode of the N1 block is acceleration/deceleration after interpolation, the rapid traverse block overlap is performed. When the acceleration/deceleration mode of the N1 block is pre-interpolation acceleration/deceleration, the rapid traverse block overlap is not performed. However, even if the acceleration/deceleration mode of the N1 block is acceleration/deceleration after interpolation, a block without movement that is inserted between a G00 command and G28/30 block is not overlapped when the rapid traverse block overlap for G00 is disabled ("#1442 G0ol" is "0") and rapid traverse block overlap for G28 is enabled ("#1443 G28ol" is "1").

(2) When a block without a movement command is inserted between blocks that are subject to the rapid traverse block overlap, the in-position width is not compensated for based on the path.

(3) When the high-accuracy control mode is selected or the parameter #1205 is set to "1" or "2", the next block will not be performed until the speed is reduced below the rapid speed (#2001) if the speed at the completion of in-position check is higher than the rapid speed (parameter #2001) of the next block.

(4) Even when the overlap process blocks continue, if one or more axes are moved in reversed direction, the overlap function is temporarily canceled.

(5) The rapid traverse block overlap is not performed during tool center point control or during inclined surface machining.

(6) (Only for C80 Series) The rapid traverse block overlap function is temporarily canceled in the following cases: when the high-accuracy control mode is selected; when the parameter #1205 is set to "1" or "2" and the parameters #1569 and #1570 are set to "0".

## 7.14.2 Rapid Traverse Block Overlap for G28

### Function and purpose

This function enables the next block to start (overlap) without waiting for the deceleration completion at the joint between blocks in the G00-G28/G30 command or at the intermediate point of G28/G30. This reduces the cycle time of machining including the G00 or G28/G30 operation. (*1)

(*1) Cycle time reduction may not be guaranteed in every case.

| #1711 cfg11/bit2 | Details |
|---|---|
| 0 (mode 1) | The cycle time can be reduced in normal acceleration/deceleration control. |
| 1 (mode 2) | It is also effective to reduce the cycle time in pre-interpolation acceleration/deceleration control. |

In the following cases, G00 is operated in pre-interpolation acceleration/deceleration.

- The high-speed high-accuracy control mode is selected, and "#8090 SSS ON" is set to "1".
- "#1086 G00 interp OFF" is set to "0", and "#1205 G0bdcc" (Acceleration and deceleration before G0 interpolation) is not "0".

For the rapid traverse block overlap function, also refer to "7.14 Rapid Traverse Block Overlap; G0.5 P1".
G00 can be overlapped when the rapid traverse block overlap for G00 is enabled. For details, refer to "7.14.1 Rapid Traverse Block Overlap for G00; G0.5".

### Detailed description

#### Enabling conditions

The rapid traverse block overlap function for G28 becomes effective when all of the following conditions are satisfied.

(1) The rapid traverse block overlap for G28 is enabled.
(Refer to the MTB specifications. "#1443 G28ol")

(2) High-speed reference position return is active. (Dog-type is not subject to this.)

(3) When the rapid traverse block overlap for G00 is enabled, a G00 command is followed by G28 or G30 positioning command.

**Note**

(1) For G28/G30, whether or not the appropriate block, if its movement is made via an intermediate point, is overlapped depends on the MTB specifications (parameters "#1205 G0bdcc" and "#1086 G0intp").

(2) If G28/G30 command is followed by another G28/G30, blocks are not overlapped in rapid traverse. (Blocks are not overlapped.

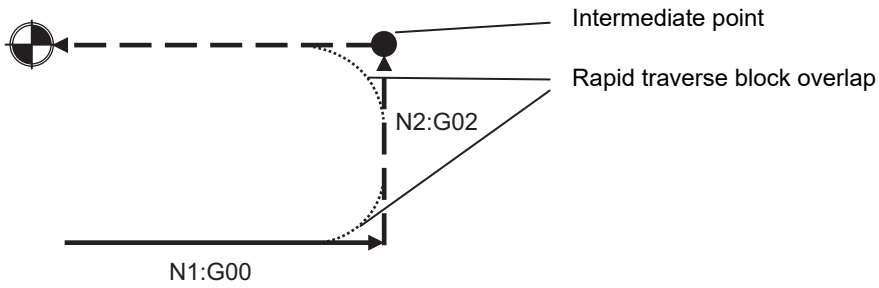


#### Adjustment of start position of overlap

The start position of overlap when a rapid traverse block overlap for G28 is executed can be adjusted with the in-position width. The next block is started when the remaining distances of all movement axes in the current movement block are smaller than the in-position width.
The in-position width depends on the MTB specifications (parameter "#2633 G28olinps").

## Program example

The following are examples of using rapid traverse block overlap for G28 in combination with G28/G30 (reference position return) and G00 (rapid traverse).

| Parameter setting | X axis | Z axis |
|---|---|---|
| #2633 G28olinps | 0.5 mm | 1 mm |

Initial position of axes: X axis = -50 mm; Z axis = -100 mm

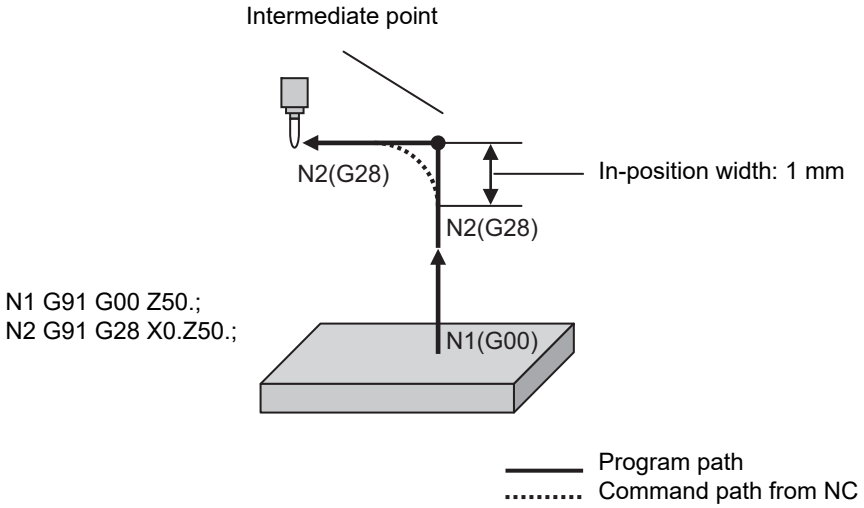


## Relationship with Other Functions

Refer to "7.14 Rapid Traverse Block Overlap; G0.5 P1".

## Precautions

Refer to "7.14 Rapid Traverse Block Overlap; G0.5 P1".

# 7.15 Automatic Corner Override

## Function and purpose

When cutting with nose radius compensation, to prevent machining surface distortion due to the increase in the cutting load when cutting corners, this command automatically applies an override on the cutting feedrate so that the cutting amount is not increased for a set time at the automatic corner R.
Automatic corner override (G62) is valid until the nose R compensation cancel (G40), exact stop check mode (G61), high-accuracy control mode (G61.1), tapping mode (G63), or cutting mode (G64) command is issued.

## Detailed description

### Machining inside corners

When cutting an inside corner, as shown in the figure below, the machining allowance amount increases and a greater load is applied to the tool. To remedy this, override is applied automatically within the corner set range, the feedrate is reduced, the increase in the load is reduced and cutting is performed effectively.
However, this function is valid only when finished shapes are programmed.

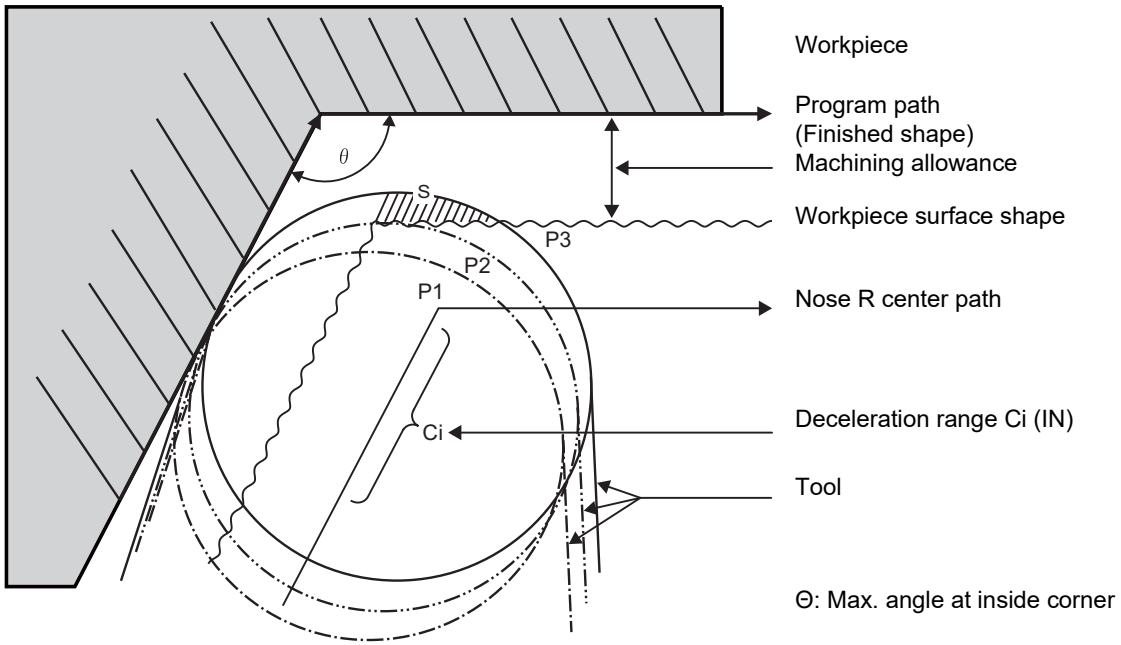


**[Operation]**

(1) If there is no G62 command:
When the tool moves in the order of P1 -> P2 -> P3 in the above figure, the machining allowance at P3 increase by an amount equivalent to the area of shaded section S compared to P2 and so that tool load increases.

(2) If there is G62 command:
When the inside corner angle θ in the above figure is less than the angle set in the parameter, the override set into the parameter is automatically applied in the deceleration range Ci.

**[Parameter setting]**

The following parameters are set into the machining parameters. Refer to the Instruction Manual for details on the setting method.

| # | Parameters | Setting range |
|---|---|---|
| #8007 | Override | 0 to 100 (%) |
| #8008 | MAX ANGLE | 0 to 180 [°] |
| #8009 | DSC.ZONE | 0 to 99999.999 [mm] or<br>0 to 3937.000 [inches] |

## Automatic corner R

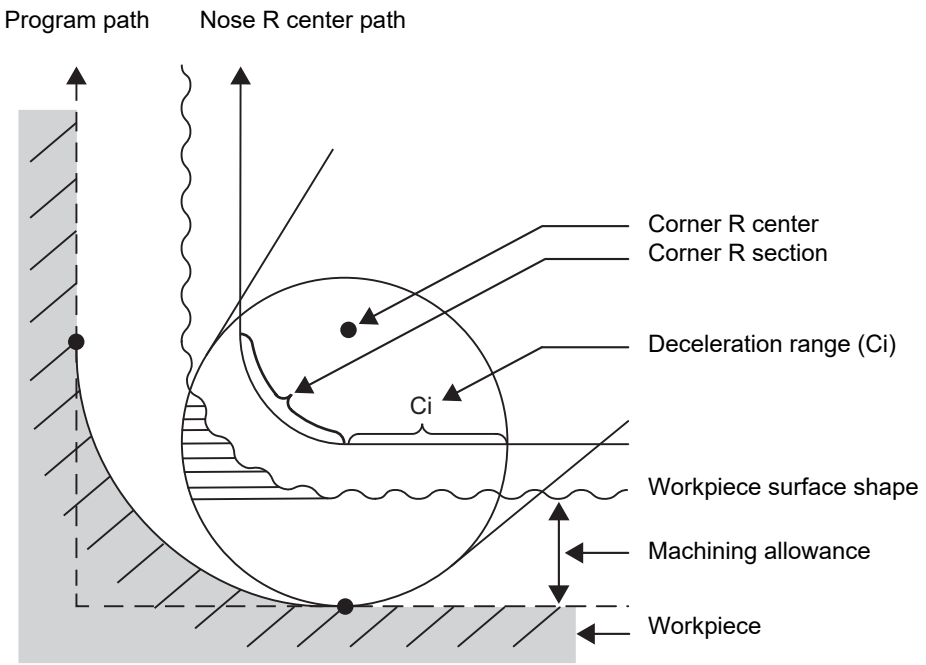


(1) The override set in the parameter is automatically applied at the deceleration range Ci and corner R section for inside offset with automatic corner R. (There is no angle check.)

## Application example

The lines in the figure denote:

- Programmed path
- Nose R center
- Arc (inside offset)

(1) Linear - linear corner

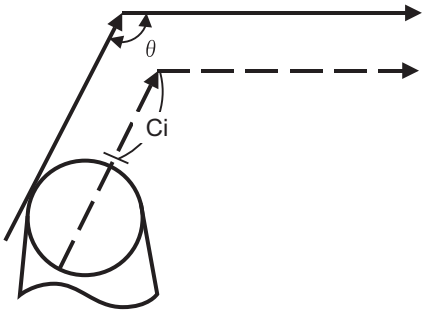


The override set in the parameter (#8007) is applied in the deceleration range Ci.

(2) Linear - arc (outside offset) corner

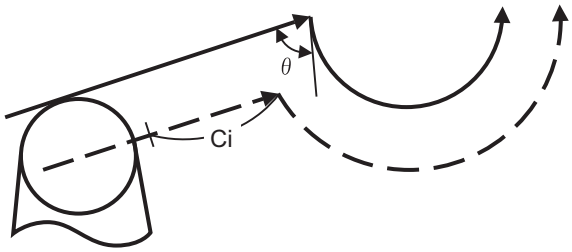


The override set in the parameter (#8007) is applied in the deceleration range Ci.

(3) Arc (outside offset) - linear corner

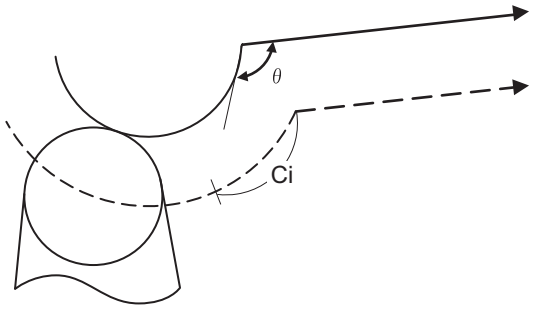


The override set in the parameter (#8007) is applied in the deceleration range Ci.
The deceleration range Ci where the override is applied is the length of the arc with an arc command.

(4) Linear - arc (inside offset) corner

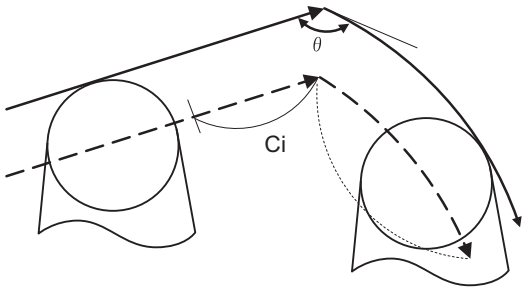


For straight lines, the override set in the parameter (#8007) is applied in the deceleration range Ci.

(5) Arc (inside offset) - linear corner

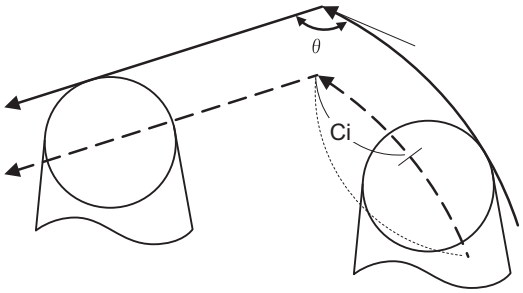


The override set in the parameter (#8007) is applied in the deceleration range Ci.
The deceleration range Ci where the override is applied is the length of the arc with an arc command.

(6) Arc (inside offset) - arc (outside offset) corner

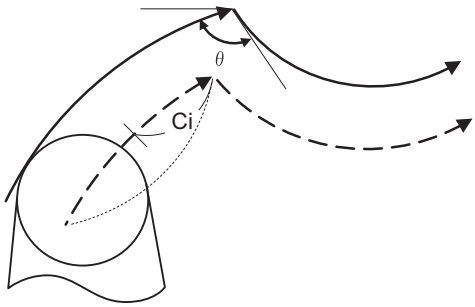


The override set in the parameter (#8007) is applied in the deceleration range Ci.
The deceleration range Ci where the override is applied is the length of the arc with an arc command.

## Relationship with other functions

| Function | Operation of automatic corner override (G62) |
|---|---|
| F1-digit Feed | Automatic corner override is applied to the F1-digit speed. |
| Cutting feed override | Cutting feed override is applied to automatic corner override. |
| Override cancel | Automatic corner override will not be canceled by override cancel. |
| External deceleration | External deceleration speed will be applied after automatic corner override is applied to the cutting feedrate. |
| Speed clamp | Clamp speed will be applied after automatic corner override is applied to the cutting feedrate. |
| Dry run | Automatic corner override will not be applied. |
| Synchronous feed | Automatic corner override is applied to the synchronous feedrate. |
| Thread cutting | Automatic corner override will not be applied. |
| G31 Skip | Program error occurs with G31 command during nose R compensation. |
| Machine lock | Automatic corner override is applied even in the machine lock state. |
| Positioning (G00) | Automatic corner override is not applied to the positioning command. |
| Linear interpolation (G01) | Automatic corner override is applied to linear interpolation. |
| Circular interpolation (G02, G03) | Automatic corner override is applied to circular interpolation. |
| Nose radius compensation cancel (G40) | The automatic corner override will not be applied while the nose R compensation is being canceled. |
| Nose radius compensation (G41, G42, G46) | Automatic corner override is applied during the nose radius compensation. |
| High-speed machining mode I/II (G05P1, G05P2) | Automatic corner override is applied during high-speed machining mode. |
| High-speed high-accuracy control I, II (G05.1Q1, G05P10000) | Automatic corner override is applied during high-speed high-accuracy control I/II. |
| High-accuracy control (G08P1) | A program error will occur if the G62 command is issued during high-accuracy control (G08P1). |
| High-accuracy control (G61.1) | Both high-accuracy control (G61.1) and automatic corner override are functions of G code group 13; therefore, they cannot be combined. |
| SSS Control | Automatic corner override is applied to SSS control. |
| Corner rounding | Automatic corner override is applied to corner rounding. |
| Feedrate override OFF (#3004 bit1 = ON) | Automatic corner override will not be applied while the feedrate override is invalid. |

**Precautions**

(1) Automatic corner override (G62) is valid only in the G01, G02, and G03 modes; it is not effective in the G00 mode. When switching from the G00 mode to the G01 (or G02 or G03) mode at a corner (or vice versa), automatic corner override will not be applied at that corner in the G00 block.

(2) Even if the automatic corner override mode is entered, the automatic corner override will not be applied until the nose R compensation mode is entered.

(3) Automatic corner override will not be applied on a corner where the nose R compensation is started or canceled.

(4) Automatic corner override will not be applied on a corner where the nose R compensation I, K vector command is issued.

(5) Automatic corner override will not be applied when intersection calculation cannot be executed.
Intersection calculation cannot be executed in the following case.
- When the movement command block does not continue for four or more times.

(6) The deceleration range with an arc command is the length of the arc.

(7) The inside corner angle, as set by parameter, is the angle on the programmed path.

(8) When the parameters are set as shown below, the automatic corner override (G62) is disabled.

(a) Conditions that disable the automatic corner override (G62)
- #8007 (override) is set to 0 or 100
- #8008 (max. angle) is set to 0 or 180
- #8009 (DSC.ZONE) is set to 0

## 7.15.1 Automatic Corner Override ; G62

**Command format**

| **G62 ; ... Automatic Corner Override** |
|---|

Automatic corner override (G62) is valid until the nose R compensation cancel (G40), exact stop check mode (G61), high-accuracy control mode (G61.1), tapping mode (G63), or cutting mode (G64) command is issued.
For detailed description, execution example, the relationship with other functions and precautions, refer to "7.15 Automatic Corner Override".

# 7.16 Tapping Mode; G63

## Function and purpose

The G63 command allows the control mode best suited for tapping to be entered, as indicated below:

(1) Cutting override is fixed at 100%.

(2) Deceleration commands at joints between blocks are invalid.

(3) Feed hold is invalid.

(4) Single block is invalid.

(5) In-tapping mode signal is output.

G63 is released by the exact stop check mode (G61), high-accuracy control mode (G61.1), automatic corner override (G62), or cutting mode (G64) command.

The machine is in the cutting mode status when its power is turned ON.

## Command format

| |
|---|
| **G63; ... Tapping mode** |

# 7.17 Cutting Mode; G64

## Function and purpose

The G64 command allows the cutting mode in which smooth cutting surfaces are obtained to be established. Unlike the exact stop check mode (G61), the next block is executed continuously with the machine not decelerating and stopping between cutting feed blocks in this mode.

G64 is released by the exact stop check mode (G61), high-accuracy control mode (G61.1), automatic corner override (G62), or tapping mode (G63).

The machine is in the cutting mode status when its power is turned ON.

## Command format

| |
|---|
| **G64; ... Cutting mode** |

# 8

# Dwell

# 8.1 Dwell (Time-based Designation); G04

## Function and purpose

The machine movement is temporarily stopped by the program command to make the waiting time state. Therefore, the start of the next block can be delayed. The waiting time state can be canceled by inputting the skip signal.

The dwell functions are classified into two types: "dwell (time-based designation)" and "dwell (revolution-based designation)".
This chapter describes the dwell (time-based designation) function.
To perform the dwell (time-based designation), command "G04" in the asynchronous feed mode (G94). The machine waits for the specified amount of time before executing the next block.

## Command format

**Dwell (Time-based designation)**

```
G94 G04 X/U__ ;
```

```
G94 G04 P__;
```

| | |
|---|---|
| X/U/P | Dwell time |

When the asynchronous feed mode (G94) is being executed, there is no need to specify G94.

The setting unit of the dwell time depends on the address type and the parameter setting value. For details, refer to "Detailed description".

In addition to the address P and X, the address U (actually, the address corresponding to the X-axis designated with the "#1014 incax") can be used.

## Detailed description

(1) The decimal point command is valid for the dwell time designated with the address X or U.

(2) When the parameter "#8112 DECIMAL PNT-P" is "1", the decimal point command is valid for the dwell time designated with the address P. When #8112 is "0", the decimal point command is invalid, and the number below the decimal point of the P command value is ignored.
When the decimal point command is valid and when it is invalid, the command range of the dwell time is respectively as follows.

| The decimal point command is valid. (#8112 = 1) | The decimal point command is invalid. (#8112 = 0) |
|---|---|
| 0 to 99999.999 (s) | 0 to 99999999 (ms) |

(3) When the parameter "#1078 Decpt2" is "1", the dwell time setting unit applied when there is no decimal point in the command value of the dwell time can be set to seconds. This is effective only for the addresses X and U, and the address P for which the parameter "#8112 DECIMAL PNT-P" is "1".

(4) If any of the following conditions is met, the dwell time unit commanded by "P" is "ms"; however, the setting unit can be changed with the parameter "#19014 G04 P factor".
- "#8112 DECIMAL PNT-P" is set to "0".
- "#8112 DECIMAL PNT-P" is set to "1", "#1078 Decept2" is set to "0" and the value of address "P" has no decimal point.

The actual duration of dwell (time) can be obtained from the following formula.

$P \times 10^n$

P: command value of address "P"
n: setting value of #19014 ("-3" to "3")

| Setting value of #19014 | Command increment (ms) | Maximum duration of dwell (ms) |
|---|---|---|
| -3 | 0.001 | 99999.999 (ms) |
| -2 | 0.01 | 999999.99 (ms) |
| -1 | 0.1 | 9999999.9 (ms) |
| 0 | 1 | 99999999 (ms) |
| 1 | 10 | 999999.99 (s) |
| 2 | 100 | 9999999.9 (s) |
| 3 | 1000 | 99999999 (s) |

(5) When a cutting command is in the previous block, the dwell command starts counting the dwell time after the machine has decelerated and stopped. When the dwell command is issued in the same block as an M, S, T or B command, the count starts simultaneously.

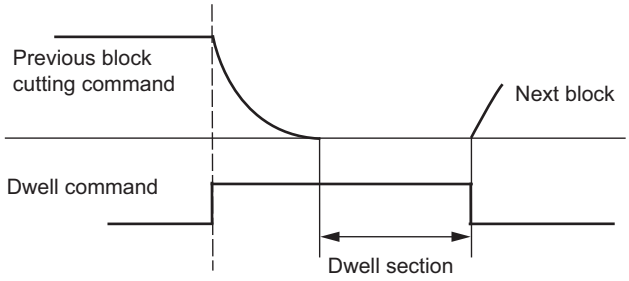


(6) Operations vary depending on whether or not the dwell override specifications are provided. This depends on the MTB specifications (parameter "#1436 mstsyn").
Refer to "16.8.1 Dwell/Miscellaneous Function Time Override" for details.

(a) When the dwell/miscellaneous function time override function is valid:
The specified time (s) is affected by cutting feed override.
For example, if cutting feed override is set to 50%, the dwell time is doubled. This is not affected by other overrides (rapid traverse override, manual traverse override, and spindle override).

(b) When the dwell/miscellaneous function time override function is invalid:
The specified time is not affected by any override.

(7) If a feed hold signal is input while dwelling is being performed, the count of the dwell time is interrupted. When the operation is restarted, the count of the dwell time is restarted.

(8) The dwell is valid during the interlock.

(9) The dwell is valid even for the machine lock.

(10) Depending on the MTB specifications, the dwell can be canceled by the skip signal (parameter "#1173 dwlskp").
If the set skip signal is input during the dwell time, the remaining time is discarded, and the following block will be executed.

## Program example

Here is a program example which satisfies the following conditions.

•#100 = 1000 ;
•The parameter "#19014 G04 P factor" is set to "0".

| Command | Dwell time [s] | | | |
|---|---|---|---|---|
| | #1078 = 0 | | #1078 = 1 | |
| | #8112 = 0 | #8112 = 1 | #8112 = 0 | #8112 = 1 |
| G04 X500 ; | 0.5 | | 500 | |
| G04 X5000 ; | 5 | | 5000 | |
| G04 X5 ; | 5 | | 5 | |
| G04 X#100 ; | 1000 | | 1000 | |
| G04 P5000 ; | 5 (*1) | | 5 (*1) | 5000 |
| G04 P12.345 ; | 0.012 (*1) | 12.345 | 0.012 (*1) | 12.345 |
| G04 P#100 ; | 1 (*1) | 1000 | 1 (*1) | 1000 |

(*1) When the parameter "#19014 G04 P factor" is set to a value other than "0", refer to the description for the parameter #19104 in "Detailed description".

### Note

(1) The operation command described by address "U" is the same as that of address "X" shown in the above example.

## Relationship with Other Functions

### Fixed cycle command

The G04 operation in the fixed cycle subprogram follows the asynchronous feed (G94) or synchronous feed (G95) mode that is set when the fixed cycle is commanded. However, if the parameter "#8130 Dwell in rev." is "0" (invalid), the dwell (time-based designation) is carried out.

When the parameter "#19019 fixpro G04P factor" is "1", the factor of the dwell command value in the fixed cycle subprogram is changed according to the "#19014 G04 P factor" setting.
When the parameter #19019 is "0", the factor is "1" regardless of the "#19014 G04 P factor" value.

### Synchronous tapping cycle command

The G04 operation in the synchronous tapping cycle subprogram is set to the dwell (time-based designation) regardless of whether the asynchronous (G94) or synchronous (G95) mode is set.

The larger value of the address P value and the setting value of "#1313 TapDwl" (Synchronous tap hole bottom wait time) is the wait time at the hole bottom in the synchronous tapping cycle.
When the parameter "#19019 fixpro G04P factor" is "1", the value obtained by multiplying the wait time value by the "#19014 G04 P factor" value is used as an actual wait time at the hole bottom.

## Precautions and restrictions

(1) To use this function, the dwell time must be commanded after G04. When the dwell time is commanded before G04, the dwell time may differ from the estimated one.

## 8.2 Dwell (Revolution-based Designation); G04

### Function and purpose

The machine movement is temporarily stopped by the program command to make the waiting time state. Therefore, the start of the next block can be delayed. The waiting time state can be canceled by inputting the skip signal.

This chapter describes the dwell (revolution-based designation) function.
To perform the dwell (revolution-based designation), command "G04" in the synchronous feed mode (G95). The machine waits for the spindle to rotate the designated number of revolutions.

### Command format

**Dwell (Revolution-based designation)**

```
G95 G04 X/U__ D__ ;
```

```
G95 G04 P__  D__  ;
```

| | |
|---|---|
| X/U/P | Number of revolutions for dwell |
| D | Dwell target spindle (*1)<br>For spindle number: 1 to n (n: Maximum number of available spindles)<br>For spindle name: 1 to 9 |

(*1) There are two types of spindle designation methods: spindle number method and spindle name method, which vary depending on the MTB specifications. When the name (1 to 9) has been specified for all the spindles with the parameter "#3077 Sname" (Spindle command name), a command is given with the spindle name. For others, command with the spindle number.

G95 is not necessary when there is a "D" command in the same block as G04.
G95 is not necessary in the synchronous feed mode (G95).

The setting unit of the number of revolutions for dwell depends on the address type and the parameter setting value. For details, refer to "Detailed description".

In addition to the address P and X, the address U (actually, the address corresponding to the X-axis designated with the "#1014 incax") can be used.

## Detailed description

(1) In multiple-spindle control II, the spindle designated with the address D is invalid. To command the dwell (revolution-based designation), G95 needs to be designated.

(2) The decimal point command is valid for the number of revolutions for dwell designated with the address X or U.

(3) When the parameter "#8112 DECIMAL PNT-P" is "1", the decimal point command is valid for the number of revolutions for dwell designated with the address P. When #8112 is "0", the decimal point command is invalid, and the number below the decimal point of the P command value is ignored.

(4) When the decimal point command is valid and when it is invalid, the command range of the number of revolutions for dwell is respectively as follows.

| The decimal point command is valid (#8112 = 1) | The decimal point command is invalid. (#8112 = 0) |
|---|---|
| 0 to 99999.999 (rev) | 0 to 99999999 (0.001 rev) |

(5) When the parameter "#1078 Decpt2" is "1", the setting unit applied when there is no decimal point in the command value of the number of revolutions for dwell can be set to revolutions (rev).

This is effective only for the addresses X and U, and the address P for which the parameter "#8112 DECIMAL PNT-P" is "1".

(6) If any of the following conditions is met, the unit of the number of revolutions for dwell commanded by P is "0.001 (rev)", but the setting unit can be changed with the parameter "#19014 G04 P factor".
- "#8112 DECIMAL PNT-P" is set to "0".
- "#8112 DECIMAL PNT-P" is set to "1", "#1078 Decimal pnt type 2" is set to "0" and the value of address "P" has no decimal point.

The actual duration of dwell (number of revolutions) can be obtained from the following formula.

$P \times 10^n$

P: command value of address "P"
n: setting value of #19014 ("-3" to "3")

| Setting value of #19014 | Command increment (rev) | Maximum duration of dwell (rev) |
|---|---|---|
| -3 | 0.000001 | 99.999999 |
| -2 | 0.00001 | 999.99999 |
| -1 | 0.0001 | 9999.9999 |
| 0 | 0.001 | 99999.999 |
| 1 | 0.01 | 999999.99 |
| 2 | 0.1 | 9999999.9 |
| 3 | 1 | 99999999 |

(7) When a cutting command is in the previous block, the dwell command starts counting the number of revolutions for dwell after the machine has decelerated and stopped. When the dwell command is issued in the same block as an M, S, T or B command, the count starts simultaneously.

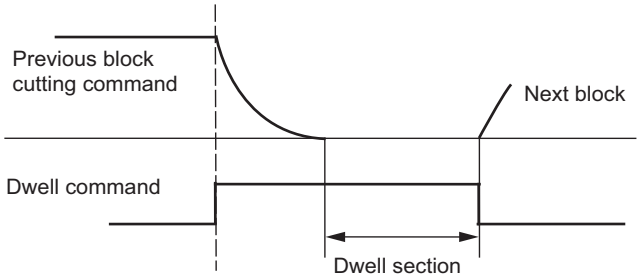


When the number of revolutions for dwell is set to 100 (rev) and the spindle rotation speed is set to 1000 (r/min), the machine waits for 6 seconds during the dwell interval.

(8) Details for override

The dwell time is not affected by cutting feed override, rapid traverse override, or manual traverse override regardless of whether the dwell override/miscellaneous function time override function is valid or invalid ("#1436 mstsyn").

However, if the spindle rotation speed is changed by spindle override, the spindle rotation wait time is also changed.

(9) If a feed hold signal is input while dwelling is performed, the count of the number of revolutions for dwell is interrupted. When the operation is restarted, the count of the number of revolutions for dwell is restarted.

(10) The dwell is valid during the interlock.

(11) The dwell is valid even for the machine lock.

(12) Depending on the MTB specifications, the dwell can be canceled by the skip signal (parameter "#1173 dwlskp"). If the set skip signal is input during dwelling, dwelling is skipped by the number of remaining spindle rotation times, and the following block will be executed.

(13) Dwell is also stopped while the spindle is stopped. When the spindle starts to rotate again, dwell also restarts.

(14) When the parameter "#8130 Dwell in rev." is "1", dwell (revolution-based designation) is executed in the synchronous feed mode (G95).
When there is a "D" command in the same block as G04, dwell (revolution-based designation) is executed regardless of the #8130 setting value and irrespective of asynchronous mode or synchronous mode.

(15) The spindle that is targeted for dwelling varies depending on the following conditions.

When multiple-spindle control I is valid:

(a) If a D command is not included in the same block as for G04:
Dwell is applied to the spindle designated in the spindle selection command (G43.1/G44.1/G47.1).

(b) If a D command is included in the same block as for G04:
Dwell is applied to the spindle designated in the D command.

When multiple-spindle control II is valid:

Dwell is applied to the spindle selected by the "encoder selection" signal from the PLC.

The spindle designated in the spindle selection command (G43.1/G44.1/G47.1) or "D" command is invalid.

## Relationship with Other Functions

### Spindle selection command

The spindle designation (D) for the dwell (revolution-based designation) is valid only in the G04 block. This does not affect the spindle designated in the spindle selection command (G43.1/G44.1/G47.1).

### Fixed cycle command

The G04 operation in the fixed cycle subprogram follows the asynchronous feed (G94) or synchronous feed (G95) mode that is set when the fixed cycle is commanded. However, if the parameter "#8130 Dwell in rev." is "0" (invalid), the dwell (time-based designation) is carried out.

When the parameter "#19019 fixpro G04P factor" is "1", the factor of the dwell command value in the fixed cycle subprogram is changed according to the "#19014 G04 P factor" setting. When the parameter #19019 is "0", the factor is "1" regardless of the "#19014 G04 P factor" value.

### Synchronous tapping cycle command

The G04 operation in the synchronous tapping cycle subprogram is set to the dwell (time-based designation) regardless of whether the asynchronous (G94) or synchronous (G95) mode is set.

## Precautions

(1) To use this function, the number of revolutions for dwell must be commanded after G04. When the number of revolutions for dwell is commanded before G04, the number of revolutions for dwell may differ from the estimated one.

# 9

# Miscellaneous Functions

# 9.1 Miscellaneous Functions (M8-Digits)

## Function and purpose

The miscellaneous functions are also known as M functions, and they command auxiliary functions, such as spindle forward and reverse rotation, operation stop and coolant ON/OFF.

## Detailed description

These functions are designated by an 8-digit number (0 to 99999999) following the address M, and multiple commands can be issued in a single block. The number of M commands that can be issued within the same block depends on the MTB specifications (parameter "#12005 Mfig").

(Example) G00 Xx Mm1 Mm2 Mm3 Mm4;

When the number of M commands in a single block is greater than the setting value of the parameter "#12005 Mfig", the commands issued later are valid.

Whether to BCD output or binary output the miscellaneous function can be selected by a parameter.

The eight commands of M00, M01, M02, M30, M96, M97, M98 and M99 are used as auxiliary commands for specific objectives and so they cannot be used as general auxiliary commands.

Reference should be made to the instructions issued by the MTB for the actual correspondence between the functions and numerical values.
When the M00, M01, M02, and M30 functions are used, the next block is not read into the pre-read buffer due to pre-read inhibiting.
If the M function is designated in the same block as a movement command, the commands may be executed in either of the following two orders. The machine specifications determine which sequence applies.

(1) The M function is executed after the movement command.
(2) The M function is executed at the same time as the movement command.

An override can be applied to the miscellaneous function time depending on the MTB specifications (parameter "#1436 mstsyn").
When this specification is valid, refer to "16.8.1 Dwell/Miscellaneous Function Time Override".

Processing and completion sequences are required in each case for all M commands except M96, M97, M98 and M99.

### Program stop (M00)

When the NC has read this function, it stops reading the next block. As far as the NC system's functions are concerned, it only stops reading the next block. Whether machine functions such as the spindle rotation and coolant supply are stopped or not differs according to the machine in question.
Re-start is enabled by pressing the automatic start button on the machine operation board.
Whether resetting can be initiated by M00 depends on the machine specifications.

### Optional stop (M01)

If the M01 command is read when the optional stop switch on the machine operation board is ON, it will stop reading the next block and perform the same operation as the M00.
If the optional stop switch is OFF, the M01 command is ignored.

(Example)

```
          :
N10 G00 X1000 ;              The state and operation of optional stop switch
N11 M01 ;                    Stops at N11 when the switch is ON
N12 G01 X2000 Z3000 F600 ;   Next command (N12) is executed without stopping at N11 when the
                             switch is OFF
          :
```

### Program end (M02 or M30)

This command is normally used in the final block for completing the machining, and so it is primarily used for cueing up the machining program. Whether the program is actually cued up or not depends on the machine specifications. Depending on the machine specifications, the system is reset by the M02 or M30 command upon completion of cueing up the program and any other commands issued in the same block.
(Although the contents of the command position display counter are not cleared by this reset action, the modal commands and compensation amounts are canceled.)
The next operation stops when the cueing up operation is completed (the in-automatic operation lamp goes off).
To restart the unit, the automatic start button must be pressed or similar steps must be taken.

When the program is restarted after M02 and M30 are completed, if the first movement command is designated only with a coordinate word, the interpolation mode will function when the program ends. It is recommended that a G function always be designated for the movement command designated first.

**Note**

(1) Individual signals are also output respectively for the M00, M01, M02 and M30 commands and these outputs are each reset by pressing the reset key.
(2) M02 or M30 can be assigned by manual data input (MDI).
At this time, commands can be issued simultaneously with other commands.

### Macro Interruption (M96, M97)

M96 and M97 are M codes for user macro interrupt control.
To use M96 and M97 as miscellaneous functions, change to another M code with the parameter ("#1109 subs_M", "#1110 M96_M" and "#1111 M97_M").
Sequence processing is unnecessary for the M commands (No M code signal nor strove signal is output).

### Subprogram call/completion : (M98, M99)

These commands are used as the return instructions from branch destination subprograms and branches to subprograms.
Sequence processing is unnecessary for the M commands (No M code signal nor strove signal is output).

### Internal processing with M00/M01/M02/M30 commands

Internal processing suspends pre-reading when the M00, M01, M02 or M30 command has been read. Other cueing up operations and the initialization of modals by resetting differ according the machine specifications.

## Relationship with other functions

### G1 successive command [C80]

When G1 command is successively issued, the blocks are overlapped in order to smooth the joint between blocks.

Normally, in a block including a miscellaneous command, the overlap is temporarily canceled. In this case, this control aims to keep the speed constant until the end of the block; however, when the miscellaneous function strobe is turned OFF by the completion signal, the overlap is enabled. The movement speed is slightly fluctuated by this behavior.

The behavior can be switched by the parameter setting so that the speed is kept constant without temporary cancellation of the overlap even when the miscellaneous command is issued in the same block. The switching is performed with "#1701 cfg01/bit5" (Behavior of overlapping for G1 command blocks).

When S command, T command and 2nd miscellaneous command are issued, the behavior is switched in the same way as the miscellaneous command.

[Overlap by G1 successive command]

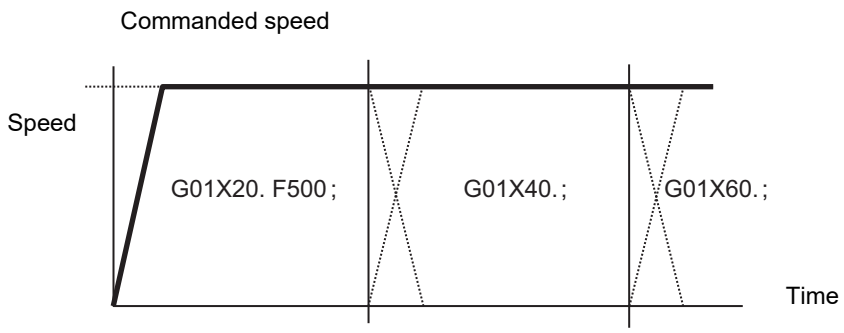


[Overlap by G1 successive command (with miscellaneous command)]

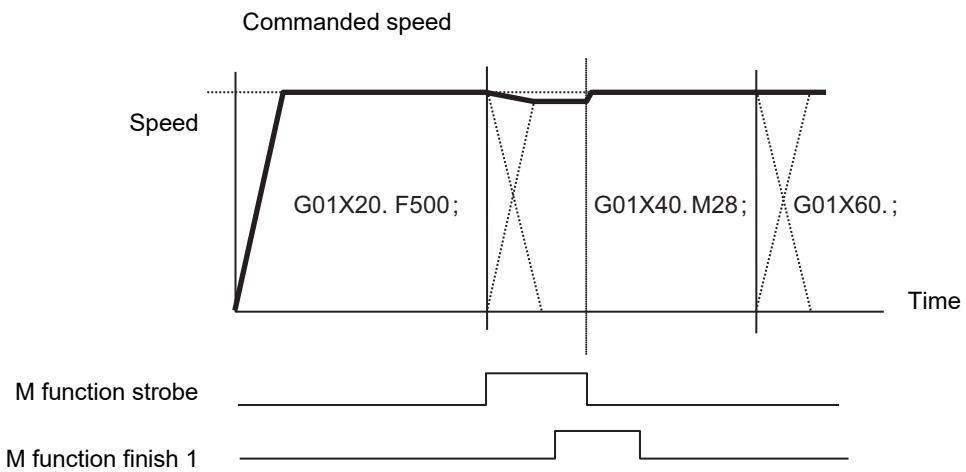

## Precautions

Even when the miscellaneous command is issued, the overlap is enabled by enabling "#1701 cfg01/bit5" (Behavior of overlapping for G1 command blocks). However, when the movement command is finished earlier than the miscellaneous command, a wait for completion of miscellaneous command is made while the remaining movement amount of the overlap with the next block is left. After the completion of the miscellaneous command, the remaining distance is moved by overlapping with the next block.

[Overlap by G1 successive command (when a wait for completion of miscellaneous command is made)

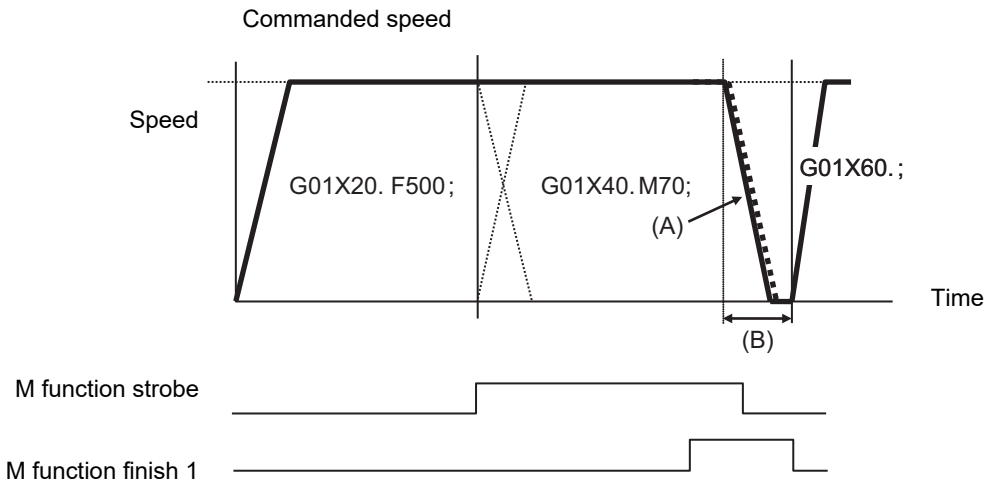


(A) The remaining movement amount is left.
(B) A wait for completion of miscellaneous command is made.

# 9.2 2nd Miscellaneous Functions (A8-digits, B8-digits or C8-digits)

## Function and purpose

These serve to assign the indexing table positioning, etc. In this controller, they are assigned by an 8-digit number from 0 to 99999999 following address A, B or C. The MTB determines which codes correspond to which positions.

## Detailed description

The address that is used for the 2nd miscellaneous function (A, B, or C, or MA, MB, or MC) depends on the MTB specifications (combination of parameters "#1170 M2name" and "#12089 M2adr"). (Except the address that is used for the axis name and the increment command axis name.)

The 2nd miscellaneous function can be issued for up to 4 sets in a block. The number of commands that can be issued within the same block depends on the MTB specifications (parameter "#12011 Bfig").
Whether to BCD output or binary output the 2nd miscellaneous function can be selected by a parameter.
If the A, B or C function is designated in the same block as a movement command, the commands may be executed in either of the following two orders. The machine specifications determine which sequence applies.

(1) The A, B or C function is executed after the movement command.
(2) The A, B or C function is executed simultaneously with the movement command.

Processing and completion sequences are required for all 2nd miscellaneous functions.
The table below gives address combinations. It is not possible to use an address that is the same for the axis name of an additional axis and 2nd miscellaneous function. The following shows an example for addresses A, B, and C.

| | | Additional axis name | | |
|---|---|---|---|---|
| | | **A** | **B** | **C** |
| 2nd miscellaneous function | A | - | ○ | ○ |
| | B | ○ | - | ○ |
| | C | ○ | ○ | - |

## Precautions

(1) When A has been assigned as the 2nd miscellaneous function address, the following commands cannot be used.
- ♦Linear angle commands (",A" can be used.)
- ♦Geometric command
- ♦Deep hole drilling cycle 2 command

# 9.3 Index Table Indexing

## Function and purpose

Index table indexing can be carried out by setting the index axis.
The indexing command only requires specifying the indexing angle to the axis set for indexing. It is not necessary to command special M codes for table clamping and unclamping, thus simplifying the program.
There are the following two types for this function. Which type is valid and which axis is set as the indexing axis depend on the MTB specifications (parameters "#1282 ext18/bit3" and "#2076 index_x").

- Type A: When the unclamp command signal is turned OFF, the clamp operation is performed.
- Type B: When the clamp command signal is turned ON, the clamp operation is performed.

The PLC operation and each signal input/output depend on the MTB specifications.

## Command format

```
G00 B90 ;
```

| | |
|---|---|
| B | Index table indexing axis (designated with parameter "#2076 index_x") |

## Detailed description

### Type A operations

(1) The movement command (either absolute or incremental) for the selected axis is executed with the program command.
(2) The unclamp command signal is now output prior to the axis movement.
(3) When the axes are unclamped, the unclamp completion signal is turned ON by the PLC.
(Turn the signal ON after performing required process such as servo ON or the unclamp process.)
(4) After checking the unclamp completion signal, the designated axis starts moving.
(5) Upon completion of the movement, the unclamp command signal is turned OFF.
(6) Clamp the axes and turn the unclamp completion signal OFF with the PLC.
(Turn the signal OFF after performing required process such as in-position check, servo OFF or the clamp process.)
(7) After checking that the unclamp completion signal is OFF, processing of the next block is initiated.

[Operation time chart]

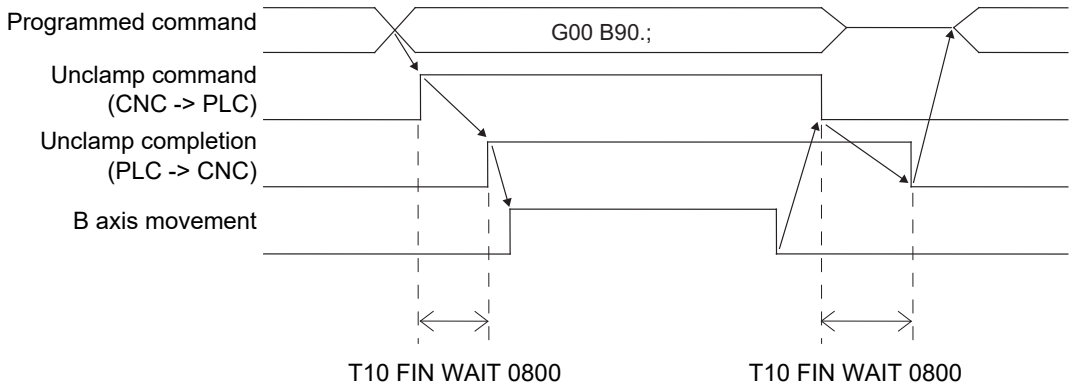

### Type B operations

(1) The movement command (either absolute or incremental) for the selected axis is executed with the program command.

(2) The unclamp command signal is now output prior to the axis movement.

(3) When the axes are unclamped, the unclamp completion signal is turned ON by the PLC.
(Turn the signal ON after performing required process such as servo ON or the unclamp process.)

(4) After checking the unclamp completion signal, turn the unclamp command signal OFF and the designated axis starts moving.

(5) Turn the unclamp completion signal OFF with the PLC.

(6) Upon completion of the movement, the clamp command signal is turned ON.

(7) Clamp the axes and turn the clamp completion signal ON with the PLC.
(Turn the signal OFF after performing required process such as in-position check, servo OFF or the clamp process.)

(8) After checking that the clamp completion signal is ON, turn the clamp command signal OFF and processing of the next block is initiated.

(9) Turn the clamp completion signal OFF with the PLC.

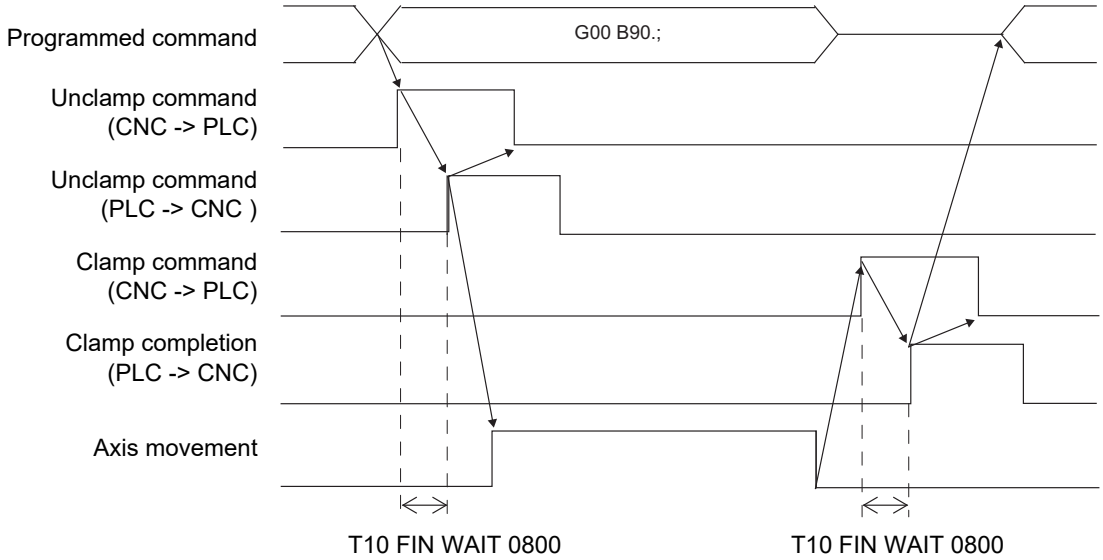


### Cutting feed prohibit of index table indexing axes

When the cutting feed of index table indexing axes is prohibited, the cutting feed can be prohibited by issuing a program error (P20) if all of the following conditions are satisfied during automatic operation.

- The indexing axis movement command is issued. (*1)
- The modal of G code group 1 is other than "G00" or "G60".

(*1) If a cutting feed command without axis movement (such as "G01 B0;" during incremental command) is issued, the program error does not occur. Also, the unclamp command is not output.

The cutting feed prohibit function is valid for both type A and type B, and the parameter settings depend on the MTB specifications (Parameter "#2580 index_Gcmd").

## Relationship with other functions

### Index table indexing and other functions

| Function | Details |
|---|---|
| Machine coordinate system selection (G53) | Possible. |
| Unidirectional positioning | (*1) |
| Servo ON/OFF signal control | Perform the required process on the PLC. |

(*1) The unidirectional positioning function can be used in the machining center system only.

- If parameter "#8209 G60 SHIFT" is not in the indexing unit, a program error (P20) will occur.
- When an axis command that cannot be divided in the command unit is issued, a program error (P20) will occur.
- In a single block operation, the block stop is carried out for the indexing axis at the position specified by parameter #8209, and the clamp or unclamp operation is carried out.

### Single block

The clamp and unclamp operations are not executed when the movement commands of the index table indexing axis are successively issued.
Note that the clamp and unclamp operations are executed even when the movement commands are continued during single block operation.
A combination of G codes that executes clamp or unclamp operation with continuous blocks is listed below.
(The unclamp operation is executed before the axis movement of previous block is started, and the clamp operation is executed after the axis movement of the next block.)

(1) Clamp and unclamp operations between continuous blocks

| Command | Continuous block | Condition and result |
|---|---|---|
| Reference position check (G27) | G00 -> G27 | (*1) |
| | G27 -> G00 | (*2) |
| Start position return (G29) | G00 -> G29 | (*1) |
| | G29 -> G00 | (*1) |
| Tool change position return 1 to 6<br>Lathe system: G30.1 to G30.5<br>Machining center system: G30.1 to G30.6 | G00 -> G30.1 | (*1) |
| Normal line control cancel (G40.1)<br>(Machining center system only) | G40.1 -> G00 | (*1) |
| Basic machine coordinate system selection (G53) | G00 -> G53 | (*3) |
| | G53 -> G00 | |
| Unidirectional positioning (G60)<br>(Machining center system only) | G00 -> G60 | (*1) |
| | G60 -> G00 | (*2) |
| | G60 -> G60 | |
| Program stop (M00) | M00 | (*1) |
| Optional stop (M01) | M01 | (*1) |

(*1) The clamp and unclamp operations are executed between blocks.

(*2) The clamp and unclamp operations are NOT executed between blocks.

(*3) The clamp and unclamp operations are executed during workpiece installation error compensation (G54.4) or during inclined surface machining command (G68.2).

(2) Clamp and unclamp operations between continuous blocks (Reference position return)

The operation during reference position return depends on the ignoring of intermediate points during return, and it depends on the MTB specifications (Parameter "#1091 Mpoint").

| Command | Continuous block | Condition and result | |
|---|---|---|---|
| | | #1091 = 1 | #1091 = 0 |
| 1st reference position return (G28) | G00 -> G28 | (*1) | (*2) |
| | G28 -> G00 | (*3) | (*4) |
| 2nd to 4th reference position return (G30) | G00 -> G30 | (*1) | (*2) |
| | G30 -> G00 | (*3) | (*4) |

(*1) Performs the clamp operation at the end of G00 movement, and performs the unclamp operation before reference position return.

(*2) The clamp/unclamp operation will not be performed until the reference position return is completed.

(*3) Performs the clamp operation after the reference position return, and performs the unclamp operation before G00 movement.

(*4) The clamp/unclamp operation will not be performed when movement to the intermediate point is completed. The clamp operation will be performed after the reference position return, and the unclamp operation will be performed before G00 movement.

## Macro interruption

Clamp/unclamp operations during macro interrupt are as follows.

| Parameter | | Settings |
|---|---|---|
| #1112 S_TRG | 0 | Edge trigger mode |
| #1113 INT_2 | 0 | Immediately start the interrupt program without waiting for the completion of currently executing block. |
| #8101 MACRO SINGLE | 1 | |

(1) When the macro interrupt program, executed during indexing axis movement, contains a movement command.

The commands in the interrupted block are lost, and the interrupt program is executed. After completion of interrupt program, when executing from the block next to the interrupt block, the clamp/unclamp operation is executed even if the interrupt program and main program specify the continuous movement.

(Example)

**[Main program]**

```
O620(MINT MAIN)
N100 G90G94;
N110 G28B0.X0.;
N120 M96P621;
N130 G01X10.B10.F150.;
N132 G01B15.;
N140 G04X3.;
N150 M97;
M02;
```

**[Interrupt program]**

```
O621(MINT SUB)
N100 G01B1.F500.;
M99;
```

(a) Performs unclamp operation at the beginning of main program N130 block.

(b) Executes macro interrupt during main program N130 execution.

(c) Performs clamp operation after end of interrupt program O621 N100 block B1.

(d) Performs unclamp operation at the beginning of main program N132 block, and performs clamp operation after axis movement.

(2) When the macro interrupt program, executed during indexing axis movement, does not contain a movement command

When executing the remaining blocks after completion of interrupt program, perform the unclamp operation at the restart of main program.
Also, perform the clamp/unclamp operation even when the next block continues.

(Example)

**[Main program]**

```
O622(MINT MAIN)
N100 G90G94;
N110 G28B0.X0.;
N120 M96P623;
N130 G01X10.B10.F150.;
N132 G01B15.;
N140 G04X3.;
N150 M97;
M02;
```

**[Interrupt program]**

```
O623(MINT SUB)
N100 #100=#100+1;
M99;
```

(a) Performs unclamp operation at the beginning of main program N130 block.

(b) Executes macro interrupt during main program N130 execution.

(c) Interrupt program O623 execution is completed.

(d) Performs unclamp operation at the restart of main program N130 block, and performs clamp operation after completion of axis movement.

(e) Performs unclamp operation at the beginning of main program N132 block, and performs clamp operation after completion of axis movement.

## Precautions

(1) Several axes can be set as index table indexing axes.

(2) The movement speed of index table indexing axes follows the feedrate of the modal (G00/G01) at that time.

(3) The unclamp command for the indexing axes is also issued when the index table indexing axes are commanded in the same block as other axes. Thus, the movement of other axes commanded in the same block is not carried out until the unclamp operation completes.
Note that the movement of other axes commanded in the same block is carried out during a non-interpolation commands.

(4) Index table indexing axes are used as normal rotation axes, but this function performs an unclamp operation even for linear axes.

(5) If some error that makes unclamp command OFF occurs during indexing axis movement in automatic operation, the unclamp state will remain, and the indexing axis will execute a deceleration stop.
Other axes commanded in the same block will also execute a deceleration stop, except during non-interpolation commands.

(6) If the axis movement is interrupted by an interlock, etc., during indexing axis movement, the unclamp state will remain.

(7) The clamp and unclamp operations are not executed when the movement commands of the index table indexing axis are successively issued.
Note that the clamp and unclamp operations are executed even when the movement commands are continued during single block operation. Refer to "Single block" of the "Relationship with other functions".

(8) Make sure that the command position is at a position where clamping is possible.

(9) Set the unidirectional positioning (G60) parameter "#8209 G60 SHIFT" in indexing increment. A program error (P20) will occur if it is not set in indexing increment.
In a single block operation, the block stop is carried out at the "#8209 G60 SHIFT" position, and the clamp or unclamp operation is carried out.

# 9.4 M Code Output during Axis Traveling ; G117

## Function and purpose

This function controls the timing at which miscellaneous functions are output, and it outputs a miscellaneous function when axis reaches at the designated position movement.

## Command format

| **G117 Xx1 Zz1 Cc1 Mm1 Mm2 Mm3 Mm4;** | |
|---|---|
| Xx1,Zz1,Cc1 | Movement start points |
| Mm1,Mm2,Mm3,Mm4 | Miscellaneous function |

## Detailed description

(1) Issue this command alone in a block just before the movement command that activates the miscellaneous function has been issued.

(2) Single block stop does not apply to this command.

(3) The maximum number of groups to which the miscellaneous functions in the G117 block can be issued is as follows:

| | |
|---|---|
| M commands | 4 sets |
| S commands | 2 sets |
| T commands | 1 set |
| 2nd miscellaneous function | 1 set |

(4) This command can be issued in up to two consecutive blocks.
When issued in three or more consecutive blocks, the last two blocks will be valid.

## Program example

```
G117 Xx1 Zz1   Mm1 Mm2 Mm3 Mm4 ;G117 Xx2 Zz2   Mm5 Mm6 Mm7 Mm8 ;
G01  X200 Z200 ;
      :
```

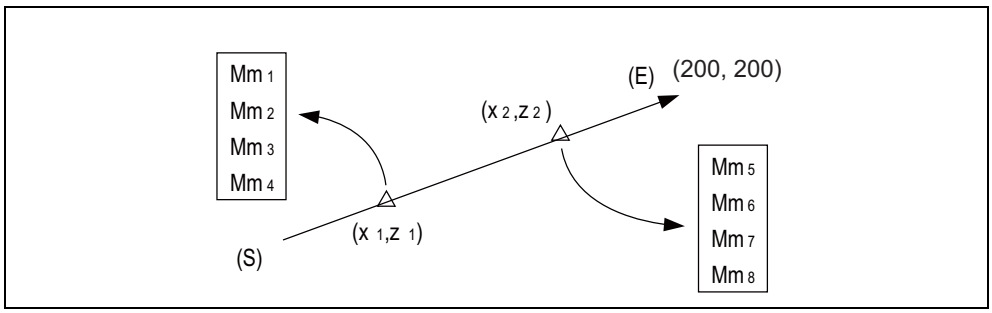


(E) End point (S) Start point

# 10

# Spindle Functions

# 10.1 Spindle Functions

## Function and purpose

(1) Spindle function (S 8-digit)
This function allows you to designate an S command with an 8-digit number (0 to 99999999) following address S and include one pair of S commands in a single block.
The output signal is a 32-bit binary data with sign and start signal.
Processing and completion sequences are required for all S commands.

(2) Spindle function (S 6-digit analog)
When the S 6-digit function is added, S commands can be designated in the range from S0 to S999999.
This function outputs the appropriate gear signal or the voltage and start signals matching the spindle rotation speed (r/min) to be commanded using the 6-digit numerical command following the S code.
Processing and completion sequences are required for all S commands.
If the gear level is switched manually while an S command is not running, this function obtains the appropriate voltage from the rotation speed designated for the gear level and the previously commanded rotation speed, and outputs the result.

# 10.2 Constant Surface Speed Control; G96, G97

## Function and purpose

This function adjusts the spindle rotation speed (constant surface speed control) in accordance with the movement of the tool nose point so that the cutting point always remains at the constant speed (constant surface speed).
Using this function for processes such as a cutting-off process is effective in terms of machining time, tool life, etc.
Note that when the tool nose point is moving to the workpiece zero point, the rotation may be at the maximum rotation speed defined in the machine specifications; this is dangerous. Be sure to specify the maximum clamp rotation speed with the spindle clamp speed setting command (G92/G50).

Constant surface speed control at constant surface speed command G96 S314 m/min

Workpiece diameter: 50 mm (Radius value)  Workpiece diameter: 25 mm (Radius value)

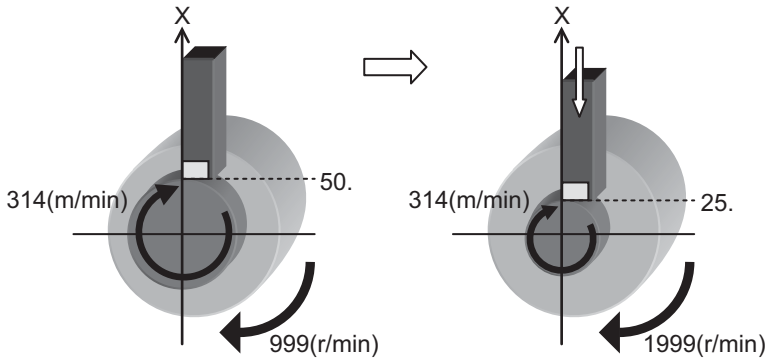


To keep the surface speed constant, this function obtains and automatically adjusts the spindle rotation speed in accordance with the movement of the tool nose point.
In the example above, to keep the surface speed (314 (m/min)) constant, the rotation speed is changed from 999 (r/min) to 1999 (r/min) with changes of the workpiece radius (50mm → 25mm).

$$\text{Spindle rotation speed (r/min)} = \frac{\text{Surface speed (m/min)}}{\text{G96 command value}} \Big/ \frac{\text{Workpiece surface (m/r)}}{\text{Automatically calculated from the workpiece zero point and tool nose position}}$$

### Note

(1) When the surface speed constant control is commanded under Inch system, the error of the spindle rotation speed specification depends on the MTB specifications (parameter "#1255 set27/bit0").

## Command format

### Constant surface speed ON

| G96 S__ P__ ; | |
|---|---|
| S | Surface speed (-99999999 to 99999999 (m/min), -99999999 to 99999999 (feet/min)) |
| P | Constant surface speed control axis 0 to n (n: Number of axes that can be controlled in the part system with G96 commanded) |

**Note**

(1) The S command is handled as the absolute value (the sign is ignored).

(2) If the value of the S command exceeds the allowable range, a program error will occur (P35).

(3) If the value of the P command exceeds the allowable range, a program error will occur (P133).

### Constant surface speed cancel

| G97 S__ ; | |
|---|---|
| S | Spindle rotation speed (-99999999 to 99999999 (r/min)) |

**Note**

(1) The S command is handled as the absolute value (the sign is ignored).

## Detailed description

(1) When the P0 or P command is not specified, the operation depends on the MTB specifications (parameter "#1181 G96_ax").
However, if this parameter is set to "0", the first axis is used as the surface speed axis regardless of whether address P is specified or not.
0: Fixed at 1st axis (P command invalid)
1: 1st axis
2: 2nd axis
:

(2) To change the constant surface speed control axis in the constant surface speed control mode, specify the command in the G96 P_ format. (However, when the parameter above is set to "0", no change can be made.)
If the S command is issued simultaneously, the surface speed can also be changed.

<Example 1>

| Machining program | Control axis sequence in constant surface speed command part system | | | Details of Operation |
|---|---|---|---|---|
| | 1st axis | 2nd axis | 3rd axis | |
| :<br>G96 S200 P1;<br>:<br>: | X1<br>↓<br>↓<br>↓ | Z1<br>↓<br>↓<br>↓ | C1<br>↓<br>↓<br>↓ | The X1 axis is used as the constant surface speed control axis.<br>(Controls the spindle rotation so that the surface speed is set to 200 (m/min) for the X1 axis.) |
| G96 P2;<br>: | ↓<br>↓ | ↓<br>↓ | ↓<br>↓ | The Z1 axis is used as the constant surface speed control axis. |

<Example 2>

| Machining program | Control axis sequence in constant surface speed command part system | | | Details of Operation |
|---|---|---|---|---|
| | 1st axis | 2nd axis | 3rd axis | |
| :<br>G96 S200 P1;<br>:<br>:<br>: | Z1<br>↓<br>↓<br>↓<br>↓ | C1<br>↓<br>↓<br>↓<br>↓ | -<br>-<br>-<br>-<br>- | The Z1 axis is used as the constant surface speed control axis.<br>(Controls the spindle rotation so that the surface speed is set to 200 (m/min) for the Z1 axis.) |

(3) The spindle to be controlled is determined in the MTB specifications (parameter "#1300 ext36/bit0").
For multiple-spindle control I (*1), the spindle is determined by the spindle selection command in the G group 20.
For multiple-spindle control II (*2), the spindle is determined by the spindle selection signal from the PLC.
(*1) Multiple-spindle control by G43.1 or G44.1 command
(*2) Multiple-spindle control with the PLC signal used Whether the specification is provided and the details depend on models and MTB specifications.

(4) Specify the spindle surface speed with the S command when constant surface speed control ON is commanded.
In constant surface speed control mode, the surface speed can only be changed with the S command.

(5) The spindle clamp speed setting (G92 S__ Q__) is to be commanded when the spindle speed needs to be limited depending on the workpiece to be machined, the chuck to be mounted on the spindle and the tool specifications, etc.
Whether the spindle clamp speed setting is made valid only in the constant surface speed control mode or also made valid for normal spindle rotation commands depends on the MTB specifications (parameter "#1227 aux11/bit5").
Once the maximum clamp rotation speed and the minimum clamp rotation speed are set using the spindle clamp speed setting (G92 S__ Q __), the maximum speed clamp will not be canceled even if the command "G92 S0" is issued.
Whether the commanded spindle clamp speed setting is kept when NC is reset during constant surface speed control depends on the MTB specifications (parameter "#1210 RstGmd/bit19").

(6) The constant surface speed control and spindle clamp speed setting can be commanded to the mth spindle or nth spindle.
Whether the command is to be issued to the mth spindle or nth spindle is commanded with the G code (G43.1/G44.1) of the spindle selection command.
Whether the mth spindle or nth spindle is selected in the initial state depends on the MTB specifications (parameter "#1199 Sselect").

| Spindle | Spindle for constant surface speed control | |
|---|---|---|
| | During G43.1 | During G44.1 |
| mth spindle | ○ | × |
| nth spindle | × | ○ |

(7) Whether the surface speed is always calculated or at the end of a block when the rapid traverse command is issued depends on the MTB specifications (parameter "#1087 G96_G0").

(8) The constant surface speed cancel command (G97) cancels constant surface speed control in the part system that has executed the constant surface speed ON command (G96).
The constant surface speed control cannot be canceled from another part system.
The spindle rotation speed is maintained at the speed specified when the constant surface speed cancel command (G97) has been executed.

(9) If NC is reset during constant surface speed control, the spindle rotation speed is changed to "0" (r/min) after reset.

### Temporary cancellation of constant surface speed control

Whether a spindle rotation command from another part system is made invalid or valid for the spindle in the constant surface speed control mode in multiple-spindle control I depends on the MTB specifications (parameter "#1447 tmp_cancel").

[When the temporary cancellation of constant surface speed control is invalid:]

If a spindle rotation command from another part system is executed for the spindle in the constant surface speed control mode, it is ignored.

[When the temporary cancellation of constant surface speed control is valid:]

(1) If a spindle rotation command from another part system is executed for the spindle in the constant surface speed control mode, the constant surface speed control is canceled temporarily. After this, if a spindle rotation command is issued from the part system in the constant surface speed control mode to the spindle in the constant surface speed control mode, it is executed as the surface speed command, and the surface speed is made constant.
The constant surface speed is temporarily canceled when a spindle rotation command is issued from another part system even in a block in which the spindle rotation speed is changed by the constant surface speed control axis movement command.

| Machining program | | Status of constant surface speed control spindle | Details of Operation |
|---|---|---|---|
| Part system that the constant surface speed was commanded | Other part system | | |
| : | : | | |
| G96 S100 P1; | : | Constant surface speed | Performs constant surface speed control. |
| : | : | ↓ | |
| : | S1=1200; | Steady rotation | This command is issued for the constant surface speed control spindle; therefore, the constant surface speed control is canceled, and the spindle rotates at the commanded rotation speed. |
| : | : | ↓ | |
| S200; | : | Constant surface speed | Restarts constant surface speed control. |
| : | : | | |

(2) If a constant surface speed control command from another part system is executed for the spindle in the constant surface speed control mode,
When a constant surface speed control command is issued from another part system even in a block in which the spindle rotation speed is changed by the constant surface speed control axis movement command, the constant surface speed control shifts to the commanded part system.

| Machining program | | Constant surface speed control part system | Details of Operation |
|---|---|---|---|
| System 1 ($1) | System 2 ($2) | | |
| : | : | | |
| G43.1; | G43.1; | | |
| G96 S100 P1; | : | $1 | The constant surface speed control is carried out from the first axis of $1. |
| : | : | ↓ | |
| : | G96 S200 P1; | $2 | The constant surface speed control is carried out from the first axis of $2. The spindle rotation speed does not change even when the first axis of $1 moves. |
| : | : | ↓ | |
| S200; | : | $1 | The constant surface speed control is carried out from the first axis of $1. The spindle rotation speed does not change even when the first axis of $2 moves. |
| : | : | ↓ | |

## Relationship with Other Functions

### Checking the maximum clamp rotation speed

When the constant surface speed control is commanded, check whether the spindle speed clamp is valid.
If the constant surface speed control axis is near the zero point, it causes the spindle to rotate at the maximum rotation speed.
Check the spindle speed clamp command to prevent the spindle from rotating at high speed.

(1) In multiple-spindle control I, when error cancellation occurs when no spindle speed clamp command is disabled according to the machine at the time of no spindle speed clamp command is disabled in the MTB specifications (parameter "#1448 Sclamp_err_cancel" is set to "0"), if any spindle clamp command is not specified in the part system with the constant surface speed commanded, it causes a program error will occur (P134). If such an error occurs, reset to finish processing, and review the machining program to command a spindle speed clamp.
If the program error described above occurs, the G96 block is not executed.
Therefore, commands in the same block as for G96 are not executed. (The modal also remains unchanged.)

(2) In multiple-spindle control II, if the speed clamp command is not valid for the selected spindle, it causes an operation error (M01 1043). When such an error occurs, reset to finish the program, and issue the spindle speed clamp command after selecting a spindle.
When the operation error above occurs, execute the commands in the same block.

(a) G96 S100 M03 command: When the spindle forward rotation signal is input from the user PLC by the M03 command, the spindle runs forward.
(The spindle speed is set to the previously commanded rotation speed.)

(b) G96 S100 X30. command: If an error occurs, axis movement is performed until the program is reset.

(3) When spindle speed clamp command check is valid, the spindle speed clamp command value is set to "0" if the G92/G50 S0 command is issued.

(4) In multiple-spindle control II, spindle speed clamp check is conducted for the spindle selected in the G96S command. Specify the spindle speed clamp command for all the currently selected spindles.

(5) Whether to conduct spindle speed clamp command check depends on the MTB specifications (parameters "#1146 Sclamp" and "#1284 ext20/bit0".)
If parameter "#1146 Sclamp" is set to "0", the spindle speed clamp command cannot be executed when constant surface speed control is turned off; therefore, the spindle speed clamp command cannot be issued before constant surface speed control.

Parameter "#1284 ext20/bit0" has the following setting:

0: Checks the spindle speed clamp.

1: Does not check the spindle speed clamp.

(6) The spindle speed clamp may be performed only in the constant surface speed mode depending on the MTB specifications (parameter "#1227 aux11/bit5"). If the program is then reset, the clamp may be rendered ineffective.
For information on whether the setting is configured to keep the clamp status, refer to the MTB specifications. (Parameter "#1210 RstGmd/bit10, bit19")

BIT10: Group 17, constant surface speed control command modal

BIT19: Spindle clamp rotation speed initialization

(7) When operating the system in the initial constant surface speed mode or with the constant surface speed modal by holding the constant surface speed control command modal, the constant surface speed control mode is set by the S command (surface speed). When spindle speed clamp command check is valid, issue the spindle speed clamp command before the S command.

(8) In multiple-spindle control I, when the speed clamp command is not valid for the selected spindle while error cancellation at the time of no spindle speed clamp command is enabled (parameter "#1448 Sclamp_err_cancel" is set to "1"), it causes an operation error (M01 1043), and the program stops in the block for which constant surface speed control is commanded. In this case, constant surface speed control is ignored, and the spindle rotation speed is maintained to the value specified before the G96 command is issued.

| Machining program | Control axis sequence in constant surface speed command part system | | | Status of constant surface speed control spindle | Details of Operation |
|---|---|---|---|---|---|
| | 1st axis | 2nd axis | 3rd axis | | |
| S1=500 | X1 | Z1 | C1 | Steady rotation | The spindle rotation speed is set to 500 (r/min). |
| : | ↓ | ↓ | ↓ | ↓ | |
| G96 S100 P1 | ↓ | ↓ | ↓ | ↓ | Since constant surface speed control is commanded while the maximum clamp rotation speed is not specified, an operation error occurs, and the system stops in the block with the G96 command issued, keeping the spindle rotation speed at 500 (r/min). |
| : | ↓ | ↓ | ↓ | ↓ | |

If a command is issued from other part systems to the spindle for constant surface speed control while an operation error is occurring (M01 1043), the rotation speed is set to the commanded value.

| Machining program | | Status of constant surface speed control spindle | Details of Operation |
|---|---|---|---|
| Part system that the constant surface speed was commanded | Other part system | | |
| S1=500 | : | Steady rotation | The spindle rotation speed is set to 500 (r/min). |
| : | : | ↓ | |
| G96 S100 P1 | : | Steady rotation | Since constant surface speed control is commanded while the maximum clamp rotation speed is not specified, an operation error occurs, and the system stops in the block with the G96 command issued, keeping the spindle rotation speed at 500 (r/min). |
| : | : | ↓ | |
| : | S1=1500 | Steady rotation | The spindle rotation speed is set to 1500 (r/min). |
| : | : | ↓ | |

If the program is interrupted by reset or emergency stop while an operation error (M01 1043) occurs, the constant surface speed control mode is released, causing the operation error to be canceled. Whether to initialize the modal by reset depends on the MTB specifications (parameter "#1210 RstGmd/bit10").

The axis included in the part system in which an operation error (M01 1043) occurs cannot be exchanged as an arbitrary axis. Whether to wait until axis exchange becomes possible or cause an operation error (M01 1101) during waiting depends on the MTB specifications (parameter "#1432 Ax_Chg_Spec/bit0").

If the maximum clamp rotation speed command is issued from other part systems to the spindle for constant surface speed control while an operation error (M01 1043) occurs, the operation error is canceled, and constant surface speed control starts.

| Machining program | | Status of constant surface speed control spindle | Details of Operation |
|---|---|---|---|
| **Part system that the constant surface speed was commanded** | **Other part system** | | |
| S1=500 | : | Steady rotation | The spindle rotation speed is set to 500 (r/min). |
| : | : | ↓ | |
| G96 S100 P1 | : | Steady rotation | Since constant surface speed control is commanded while the maximum clamp rotation speed is not specified, an operation error occurs, and the system stops in the block with the G96 command issued, keeping the spindle rotation speed at 500 (r/min). |
| : | : | ↓ | |
| : | G92 S3000 | Constant surface speed | The maximum clamp rotation speed has been commanded. This cancels an operation error and starts constant surface speed control. |
| : | : | ↓ | |

### Arbitrary axis exchange control

(1) If constant surface speed control axes are rearranged by the arbitrary axis exchange command, the spindle rotation speed is maintained at the value specified before rearrangement.

(2) If a new surface speed is specified by the S command while the spindle rotation speed is maintained, it becomes valid when the rearranged constant surface speed axes are returned to the original status.

The following example shows a case in which constant surface speed control axes are renumbered by the arbitrary axis exchange command in the constant surface speed command part system.

| Machining program | Control axis sequence in constant surface speed command part system | | | Details of Operation |
|---|---|---|---|---|
| | 1st axis | 2nd axis | 3rd axis | |
| G140 X=X1 Z=Z1 C=C1<br>: | X1<br>↓ | Z1<br>↓ | C1<br>↓ | |
| G96 S100 P1<br>: | ↓<br>↓ | ↓<br>↓ | ↓<br>↓ | Conducts constant surface speed control for the X1 axis. |
| G140 Z=Z1<br>: | Z1<br>↓ | -<br>- | -<br>- | The first axis has been changed from the X1 axis to the Z1 axis; therefore, the spindle rotation speed is set to the constant rotation speed according to the final command value of the constant surface speed for the X1 axis. |
| S200<br>: | ↓<br>↓ | -<br>- | -<br>- | The command for changing the surface speed from 100 (m/min) to 200 (m/min) does not become valid because the constant surface speed rotation speed is maintained. |
| G140 X=X1<br>: | X1<br>↓ | -<br>- | -<br>- | The first axis returns to the X1 axis, and the constant surface speed calculation restarts. The surface speed is set to 200 (m/min). |

The following example shows a case in which constant surface speed control axes are renumbered by the arbitrary axis exchange command in a part system other than the constant surface speed command part system.

| Machining program | | Control axis sequence in constant surface speed command part system | | | Details of Operation |
|---|---|---|---|---|---|
| Part system that the constant surface speed was commanded | Other part system | 1st axis | 2nd axis | 3rd axis | |
| G140 X=X1 Z=Z1 C=C1<br>: | :<br>: | X1<br>↓ | Z1<br>↓ | C1<br>↓ | |
| G96 S100 P1<br>: | :<br>: | ↓<br>↓ | ↓<br>↓ | ↓<br>↓ | Conducts constant surface speed control for the X1 axis. |
| :<br>: | G140 X=X1<br>: | Z1<br>↓ | C1<br>↓ | -<br>- | The first axis has been changed from the X1 axis to the Z1 axis; therefore, the spindle rotation speed is set to the constant rotation speed according to the final command value of the constant surface speed for the X1 axis. |
| G140 X=X1<br>: | :<br>: | X1<br>↓ | -<br>- | -<br>- | The first axis returns to the X1 axis, and the constant surface speed calculation restarts. |

(3) If the constant surface speed command is re-executed when constant surface speed axes are rearranged and the spindle rotation speed is maintained at the constant rotation speed, the kept spindle rotation speed is canceled, and the reissued constant surface speed control command is executed.

| Machining program | | Control axis sequence in constant surface speed command part system | | | Details of Operation |
|---|---|---|---|---|---|
| Part system that the constant surface speed was commanded | Other part system | 1st axis | 2nd axis | 3rd axis | |
| G140 X=X1 Z=Z1 C=C1<br>: | :<br>: | X1<br>↓ | Z1<br>↓ | C1<br>↓ | |
| G96 S100 P1<br>: | :<br>: | ↓<br>↓ | ↓<br>↓ | ↓<br>↓ | Conducts constant surface speed control for the X1 axis. |
| :<br>: | G140 X=X1<br>: | Z1<br>↓ | C1<br>↓ | -<br>- | The first axis has been changed from the X1 axis to the Z1 axis; therefore, the spindle rotation speed is set to the constant rotation speed according to the final command value of the constant surface speed for the X1 axis. |
| G96 S100 P1<br>: | :<br>: | Z1<br>↓ | -<br>- | -<br>- | Conducts constant surface speed control for the Z1 axis. |

(4) If constant surface speed axes are returned to the original status by rearrangement while constant surface speed control is temporarily canceled, the spindle rotation speed will be maintained. After this, the surface speed becomes constant when it is specified with the S command.

| Machining program | | Control axis sequence in constant surface speed command part system | | | Details of Operation |
|---|---|---|---|---|---|
| Part system that the constant surface speed was commanded | Other part system | 1st axis | 2nd axis | 3rd axis | |
| G140 X=X1 Z=Z1 C=C1<br>: | :<br>: | X1<br>↓ | Z1<br>↓ | C1<br>↓ | |
| G96 S100 P1<br>: | :<br>: | ↓<br>↓ | ↓<br>↓ | ↓<br>↓ | Conducts constant surface speed control for the X1 axis. |
| :<br>: | S1=1200<br>: | ↓<br>↓ | ↓<br>↓ | ↓<br>↓ | The constant surface speed is placed into the temporary cancel state. |
| :<br>:<br>: | G140 X=X1<br>:<br>: | Z1<br>↓<br>↓ | C1<br>↓<br>↓ | -<br>-<br>- | The first axis was changed from the X1 axis to the Z1 axis, but the spindle rotation speed remains unchanged because the constant surface speed is placed into the temporary cancel state. |
| G140 X=X1 Z=Z1<br>:<br>: | :<br>:<br>: | X1<br>↓<br>↓ | Z1<br>↓<br>↓ | -<br>-<br>- | The constant surface speed remains placed in the temporary cancel state. |
| S100<br>: | :<br>: | ↓<br>↓ | ↓<br>↓ | -<br>- | Conducts constant surface speed control for the X1 axis. |

(5) If the surface speed is specified by the S command with the rearrangement of the constant surface speed axes while the constant surface speed control is in the temporary cancel state, the spindle rotation speed kept at temporary cancellation is applied, and the surface speed becomes constant when the constant surface speed axes are returned to the original arrangement.

| Machining program | | Control axis sequence in constant surface speed command part system | | | Details of Operation |
|---|---|---|---|---|---|
| Part system that the constant surface speed was commanded | Other part system | 1st axis | 2nd axis | 3rd axis | |
| G140 X=X1 Z=Z1 C=C1<br>: | :<br>: | X1<br>↓ | Z1<br>↓ | C1<br>↓ | |
| G96 S100 P1<br>:<br>: | :<br>:<br>: | ↓<br>↓<br>↓ | ↓<br>↓<br>↓ | ↓<br>↓<br>↓ | Conducts constant surface speed control for the X1 axis. |
| :<br>:<br>: | S1=1200<br>:<br>: | ↓<br>↓<br>↓ | ↓<br>↓<br>↓ | ↓<br>↓<br>↓ | The constant surface speed is placed into the temporary cancel state. |
| :<br>:<br>: | G140 X=X1<br>:<br>: | Z1<br>↓<br>↓ | C1<br>↓<br>↓ | -<br>-<br>- | The first axis was changed from the X1 axis to the Z1 axis, but the spindle rotation speed remains unchanged because the constant surface speed is placed into the temporary cancel state. |
| S200<br>: | :<br>: | ↓<br>↓ | ↓<br>↓ | -<br>- | If the surface speed is changed from 100 (m/min) to 200 (m/min), the spindle rotation speed remains set to the value that is kept when the constant surface speed is temporarily canceled, and the rearranged axis is not returned to the original status, causing the constant surface speed control to not be valid. |
| G140 X=X1 Z=Z1<br>:<br>: | :<br>:<br>: | X1<br>↓<br>↓ | Z1<br>↓<br>↓ | -<br>-<br>- | The first axis returns to the X1 axis, and the constant surface speed calculation restarts. The surface speed is set to 200 (m/min). |

## Other functions

| Function name | Operation |
|---|---|
| Spindle Clamp Speed Setting (G92/G50) | The spindle clamp speed setting is valid in the constant surface speed control mode.<br>Whether the commanded spindle clamp speed setting is kept when NC is reset during constant surface speed control depends on the MTB specifications. (parameter "#1210 RstGmd/bit19") |
| Cylindrical interpolation (G07.1)<br>Milling interpolation (G12.1/G13.1) | The constant surface speed control cannot be commanded in the cylindrical interpolation or milling interpolation mode. Program error (P481) will occur.<br>The cylindrical interpolation or milling interpolation cannot be commanded in the constant surface speed control mode. Program error (P485) will occur. |
| Thread cutting (Designation of lead or number of ridges) (G32)<br>Continuous thread cutting<br>Variable lead thread cutting (G34)<br>Circular thread cutting (G35/G36)<br>Thread cutting cycle (G78)<br>Compound type thread cutting cycle (G76)<br>Multi-part system simultaneous thread cutting cycle I (G76.1)<br>Two-part system simultaneous thread cutting cycle II (G76.2) | When the constant surface speed command is issued in the same part system during execution of the thread cutting or thread cutting cycle command or when the thread cutting or thread cutting cycle command is issued in the same part system in the constant surface speed control mode, the spindle rotation speed for constant surface speed control remains unchanged.<br>(The constant surface speed control is not performed.)<br>This function keeps the spindle rotation speed specified at execution of the thread cutting or thread cutting cycle command.<br>When the thread cutting or thread cutting cycle command is terminated, the spindle rotation speed is changed to the value obtained from the position of the constant surface speed control axis and the surface speed.<br>The constant surface speed command cannot be issued from other part systems to the spindle for which the thread cutting command is currently executed. Also, the thread cutting command cannot be issued from other part systems to the spindle in the constant surface speed control mode. An operation error (M01 1113) will occur. |
| Tapping cycle (G84/G88)<br>Synchronous tapping cycle (G84/G88) | If the constant surface speed command is issued in the same part system during execution of the tapping cycle or synchronous tapping cycle command or the tapping cycle command is issued in the same part system in the constant surface speed control mode, the spindle rotation speed for constant surface speed control remains unchanged. (The constant surface speed control is not performed.)<br>This function keeps the spindle rotation speed specified at execution of the tapping cycle command.<br>When the tapping cycle or synchronous tapping cycle command is terminated, the spindle rotation speed is changed to the value obtained from the position of the constant surface speed control axis and the surface speed.<br>The constant surface speed command cannot be issued from other part systems to the spindle for which the tapping cycle or synchronous tapping cycle command is currently executed. Also, the tapping cycle or synchronous tapping cycle command cannot be issued from other part systems to the spindle in the constant surface speed control mode. An operation error (M01 1113) will occur.<br>The synchronous tapping cycle command cannot be executed in the constant surface speed control mode. Program error (P182) will occur.<br>Also, the constant surface speed command cannot be executed during execution of the synchronous taping cycle command. Program error (P186) will occur. |

| Function name | Operation |
|---|---|
| Arbitrary Axis Exchange (G140/G141) | If constant surface speed control axes are rearranged by the arbitrary axis exchange command, the spindle rotation speed is maintained at the value specified before rearrangement. The spindle rotation speed is maintained until the constant surface speed control axes are returned to the original arrangement or the constant surface speed control is canceled.<br>The axis included in the part system in which an operation error (M01 1043) occurs cannot be exchanged. |
| Cross Machining Control (G110) | If cross machining control is commanded during constant surface speed control, it causes a program error (P501). |
| Axis Name Change (G111) | If axis name switch is commanded during constant surface speed control, it causes a program error (P411). |
| Spindle synchronization control (G114.1)<br>Tool spindle synchronization I (G114.2) | The constant surface speed control can be conducted for the reference spindle during spindle synchronization or tool spindle synchronization I.<br>If the constant surface speed control command is issued to the synchronized spindle, the spindle synchronization command has priority, and the spindle rotates at the speed that is synchronized with the commanded speed of the reference spindle. The constant surface speed control for the synchronized spindle becomes valid after the spindle synchronization has been canceled. To conduct the constant surface speed control, issue the command to the reference spindle. |
| Tool Spindle Synchronization II (G114.3) | The constant surface speed control can be conducted for the reference spindle during tool spindle synchronization II. |
| Guide Bushing Spindle Synchronization | The constant surface speed control can be commanded to the reference spindle.<br>The G and B spindles are kept in the synchronous state in the constant surface speed mode.<br>The constant surface speed control cannot be commanded to the G and B spindles. |
| Spindle-Mode Servo Motor Control | The system also runs when a spindle-mode servo is specified for constant surface speed control |
| Spindle Superimposition Control (G164) | The constant surface speed command cannot be issued to the reference spindle while the tapping cycle or synchronous tapping cycle is executed for the superimposed spindle. An operation error (M01 1133) will occur.<br>The tapping cycle or synchronous tapping cycle command cannot be issued to the superimposed spindle during constant surface speed control for the reference spindle. An operation error (M01 1133) will occur. |
| External Spindle Deceleration | If the external spindle deceleration signal is set to OFF for the spindle under constant surface speed control, the spindle is clamped at the external spindle deceleration speed. The S analog maximum/minimum over signal (SOVE) is set on. |
| High-Speed Simple Program Check | The surface speed is calculated, but the actual rotation speed of the spindle remains set to the value specified before the part system synchronization machine lock high-speed operation is selected. |
| NC reset (Reset 1/2, reset & rewind) | When NC is reset during constant surface speed control, the spindle rotation speed is set to "0" (r/min). |

### Precautions

(1) Under the constant surface speed control (during G96 modal), if the axis targeted for the constant surface speed control (normally X axis for a lathe) moves toward the spindle center, the spindle rotation speed will increase and may exceed the allowable speed of the workpiece or chuck, etc. In this case, the workpiece, etc. may jump out during machining, which may break tools or the machine or injure the operators. Therefore, make sure to use this control while the "spindle speed clamp" is enabled. When the constant surface speed control is commanded, keep enough distance from the program zero point.

Program example

(Example 1) When the parameter "#1146 Sclamp" is set to "0".

| | |
|---|---|
| G96 S200 ; | The spindle rotation speed is controlled so that the surface speed is 200m/min. |
| G92 S4000 Q200 ; | The spindle rotation speed is clamped up to 4000 r/min and down to 200 r/min. |
| M3 ; | The rotation command to the spindle |

(Example 2) When the parameter "#1146 Sclamp" is set to "1"

| | |
|---|---|
| G92 S4000 Q200 ; | The spindle rotation speed is clamped up to 4000 r/min and down to 200 r/min. |
| G96 S200 ; | The spindle rotation speed is controlled so that the surface speed is 200m/min. |
| M3 ; | The rotation command to the spindle |

<Note>

♦For safety, issue the rotation command to the spindle after G92.

**⚠ WARNING**

**⚠ Under the constant surface speed control (during G96 modal), if the axis targeted for the constant surface speed control (normally X axis for a lathe) moves toward the spindle center, the spindle rotation speed will increase and may exceed the allowable speed of the workpiece or chuck, etc. In this case, the workpiece, etc. may jump out during machining, which may break tools or the machine or injure the operators.**

(2) When the G96 command is issued, do not omit the "S_" surface speed command. If omitted, the system will follow the previous "S_" command.
The S command ("S_" or "S○=" command) for the spindle in the constant surface speed control mode specifies the surface speed.

(3) If the spindle speed clamp is not commanded when the constant surface speed control axis is near the zero point, it causes the spindle to rotate at the maximum rotation speed. We recommend that you command the spindle speed clamp before the constant surface speed command.
In this case, the parameter "#1146 Sclamp" must be made valid, but this function depends on the MTB specifications.

(4) If an axis number not registered in the command part system is commanded when the constant surface speed command is specified, it causes a program error (P133).

(5) When the arbitrary axis exchange command is specified in the constant surface speed control, the spindle speed clamp command is valid even if the spindle rotation speed is maintained.

(6) Note that the rotation speed of the constant surface speed spindle may vary significantly at restart of constant surface speed processing when constant surface speed control axes are repositioned until they are rearranged by the arbitrary axis exchange command, they are returned to the original arrangement after the spindle rotation speed has been kept, and constant surface speed processing restarts.

| Machining program | | Control axis sequence in constant surface speed command part system | | | Details of Operation |
|---|---|---|---|---|---|
| Part system that the constant surface speed was commanded | Other part system | 1st axis | 2nd axis | 3rd axis | |
| G140 X=X1 Z=Z1 C=C1<br>:<br>: | :<br>:<br>: | X1<br>↓<br>↓ | Z1<br>↓<br>↓ | C1<br>↓<br>↓ | |
| G96 S100 P1<br>:<br>:<br>: | :<br>:<br>:<br>: | ↓<br>↓<br>↓<br>↓ | ↓<br>↓<br>↓<br>↓ | ↓<br>↓<br>↓<br>↓ | Conducts constant surface speed control for the X1 axis. |
| :<br>:<br>:<br>:<br>:<br>:<br>: | G140 X=X1<br>:<br>:<br>:<br>:<br>:<br>: | Z1<br>↓<br>↓<br>↓<br>↓<br>↓<br>↓ | C1<br>↓<br>↓<br>↓<br>↓<br>↓<br>↓ | -<br>-<br>-<br>-<br>-<br>-<br>- | The first axis has been changed from the X1 axis to the Z1 axis; therefore, the spindle rotation speed is set to the constant rotation speed according to the final command value of the constant surface speed for the X1 axis. |
| G140 X=X1<br>: | :<br>: | X1<br>↓ | -<br>- | -<br>- | The first axis returns to the X1 axis, and the constant surface speed calculation restarts. |

<Operation diagram>

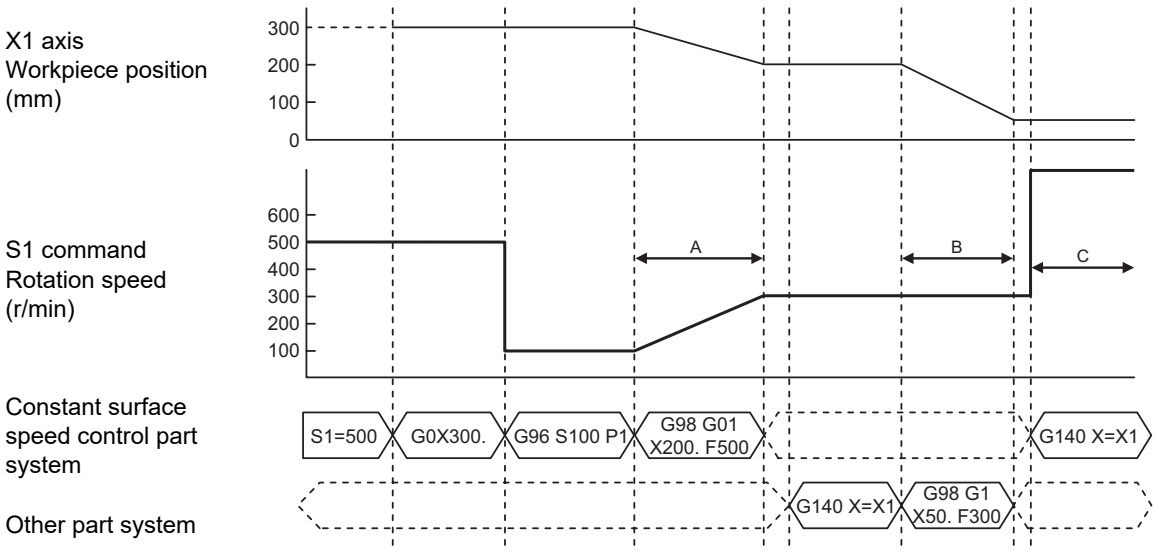


Interval A: The spindle rotation speed varies by constant surface speed control with changes of the X1 axis position.

Interval B: The X1 axis position is changed, but the spindle rotation speed does not change because the program is in the process of maintaining the spindle rotation.

Interval C: The surface speed calculation restarts, so the spindle rotation speed changes at once.

# 10.3 Spindle Clamp Speed Setting; G92

## Function and purpose

The maximum clamp rotation speed of the spindle can be assigned by address S following G92 and the minimum clamp rotation speed by address Q.
Use this command when the spindle speed needs to be limited depending on the workpiece to be machined, the chuck to be mounted on the spindle and the tool specifications, etc.

## Command format

**Spindle clamp speed setting**

```
G92 S__ Q__ ;
```

| | |
|---|---|
| S | Maximum clamp rotation speed |
| Q | Minimum clamp rotation speed |

## Detailed description

(1) Besides this command, parameters can be used to set the rotation speed range up to 4 stages in 1 r/min units to accommodate gear selection between the spindle and spindle motor. The lowest upper limit and highest lower limit are valid among the rotation speed ranges based on the parameters and based on "G92 S_ Q_;".

(2) Whether to carry out rotation speed clamp only in the constant surface speed mode or even when the constant surface speed is canceled depends on the MTB specifications (parameters "#1146 Sclamp" and "#1227 aux11/bit5").

<Note>

♦G92S command and rotation speed clamp operation

| | | Sclamp=0 | | Sclamp=1 | |
|---|---|---|---|---|---|
| | | **aux11/bit5=0** | **aux11/bit5=1** | **aux11/bit5=0** | **aux11/bit5=1** |
| **Command** | **In G96** | Rotation speed clamp command | | Rotation speed clamp command | |
| | **In G97** | Spindle rotation speed command | | Rotation speed clamp command | |
| **Operation** | **In G96** | Rotation speed clamp execution | | Rotation speed clamp execution | |
| | **In G97** | No rotation speed clamp | | Rotation speed clamp command | No rotation speed clamp |

♦The address Q following the G92 command is handled as the spindle speed clamp command regardless of the constant surface mode.

(3) The command value of the spindle clamp rotation speed will be cleared by modal reset (reset 2 or reset & rewind). Note that the modal is retained if the parameter "#1210 RstGmd / bit19" is ON.
It is set to "0" during power ON.

### Precautions

(1) Once the maximum clamp speed and the minimum clamp speed are set using the spindle clamp speed setting (G92 S__ Q __), the maximum speed clamp will not be cancelled even if the command "G92 S0" is issued. During this time, the Q__ value is still valid and S0 < Q__ is established. The Q__ value is treated as the maximum speed clamp, and S0 is treated as the minimum speed clamp.

(2) Note that if the spindle clamp speed setting (G92 S__ Q__) is not commanded, the speed may increase to the machine's maximum specified speed that is set by the parameter. Especially when the constant surface speed control (G96 S__) is commanded, command the spindle clamp speed setting as well as the spindle maximum rotation speed. As the tool moves closer to the spindle center, the spindle rotation speed will increase and may exceed the allowable speed of the workpiece or chuck, etc.

### ⚠ WARNING

⚠ **The spindle clamp speed setting command is a modal command, but make sure to confirm that the G and F modal and coordinate values are appropriate if the operation is started from a block in the middle of the program. If there are coordinate system shift commands or M, S, T and B commands before the block set as the start position, carry out the required commands using the MDI, etc. If the program is run from the set block without carrying out these operations, the machine interference may occur or the machine may operate at an unexpected speed.**

# 10.4 Multiple-spindle Control

## Function and purpose

Multiple-spindle control is a function that controls second and following spindles in addition to the first spindle in a machine tool equipped with multiple spindles.
The following control methods are available. Which mode is valid depends on the MTB specifications (parameter "#1300 ext36/bit0").
This section describes multiple-spindle control I that runs in the machining program.

| | |
|---|---|
| Multiple-spindle control I:<br>(ext36/bit0 = 0) | Control following the spindle selection command (G43.1, etc.) and spindle control command ([S*****;] or [S○=*****;]), etc. |
| Multiple-spindle control II:<br>(ext36/bit0 = 1) | Control following the PLC signal (spindle command selection signal, spindle selection signal) and spindle control command ([S***** ;] only), etc.<br>The spindle selection command [S○=*****;] cannot be used. |

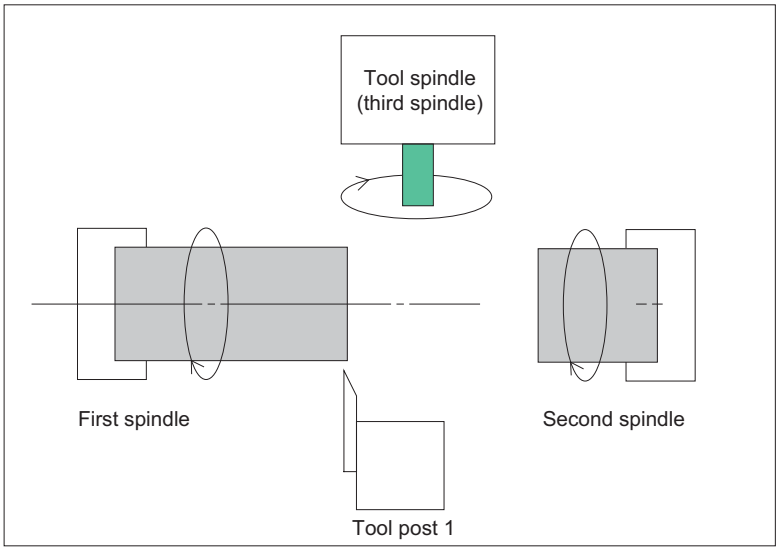

## 10.4.1 Multiple-spindle Control I (Spindle Control Command); S○=

### Function and purpose

In addition to using the "S*****" S commands, it is also possible to assign commands which differentiate each spindle by using the S○=*****.

### Command format

**Multiple-spindle control I (spindle control command)**

```
S○=***** ;
```

| | |
|---|---|
| ○ | Designate the spindle No. with one numeric character. (1: 1st spindle/2: 2nd spindle/n: nth spindle (n = Maximum number of spindles defined in the specifications). This value can be designated with a variable. |
| ***** | Rotation speed or constant surface speed command. variables can be designated. |

**Note**

(1) A program error (P35) will occur if the ○ value is not the available spindle number.

(2) A program error (P33) will occur if G47.1 is issued in a modal.

### Detailed description

(1) Each spindle command is delimited by the details of ○.
(Example)
S1 = 3500 ; 1st spindle 3500 (r/min) command
S2 = 1500 ; 2nd spindle 1500 (r/min) command

(2) Multiple spindles can be commanded in one block.

(3) If two or more commands are issued to the same spindle in a block, the command issued last will be valid.
(Example) S1 = 3500 S1 = 3600 S1 = 3700 ; S1 = 3700 will be valid.

(4) The S***** command and S○=***** command can be used together.
The spindle targeted for the S***** command is delimited by the spindle selection command.
(Example) When G44.1 spindle No. is 2

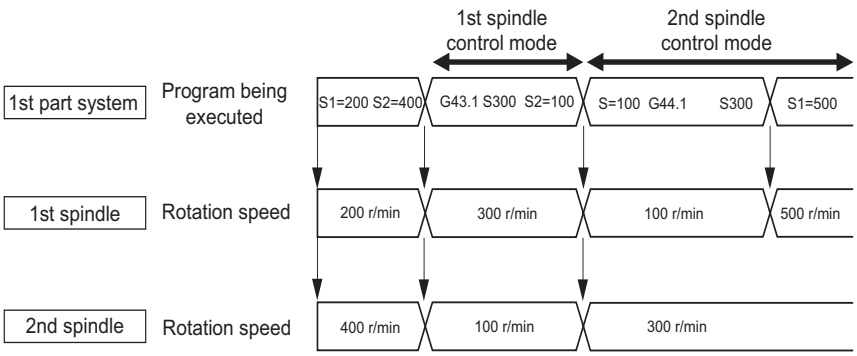


(5) The commands for each spindle can be commanded from any machining program in either part system.

## 10.4.2 Multiple-spindle Control I (Spindle Selection Command) ; G43.1,G44.1, G47.1

### Function and purpose

This function is used to select the spindle that is targeted for the S command or feed per revolution in the machine that has two or more spindles.
A spindle can be selected with the spindle selection command (G43.1/G44.1/G44.1D_).
The 1st spindle control command (G43.1) and 2nd spindle control command (G44.1) are available for the spindle designated in the parameter.
In the arbitrary spindle control command (G44.1D_), any spindle can be selected depending on the D address.
In the all spindles simultaneous control command (G47.1), all the spindles are selected.
Use this function when cutting the back of workpiece by shifting it to the second spindle from the first spindle, cutting multiple workpieces with the respective spindles or on the respective tool posts, etc.

### Command format

**Specify the spindle to turn the multiple-spindle control mode ON.**

| | |
|---|---|
| **G43.1 ;** | **1st spindle control mode ON (*1)** |

| | |
|---|---|
| **G44.1 ;** | **2nd spindle control mode ON (*1)** |

| | |
|---|---|
| **G44.1 D__;** | **Arbitrary spindle control mode ON (*2)** |

| | |
|---|---|
| D | Spindle designation<br>Spindle number or spindle name |

(*1) The spindle to be used depends on the MTB specifications. (Parameters "#12090 SnG43.1" and "#1534 SnG44.1")

(*2) Designate the target spindle using the D address.

**All spindles simultaneous control mode ON**

| |
|---|
| **G47.1 ;** |

The encoder for the 1st spindle is used.

## Detailed description

### Explanation of address

| Address | Meaning of address | Command range (unit) | Remarks |
|---|---|---|---|
| D | Spindle designation<br>Spindle number or spindle name (*1) | Spindle No.: 1 to 8<br>Spindle name: 1 to 9 | ♦If a value exceeding the command range is commanded, a program error (P35) occurs.<br>♦A program error (P35) occurs if an unregistered spindle number or spindle name is commanded. |

(*1) There are two spindle command methods: spindle number method and spindle name method.
Command with the spindle names, only when all spindles are set with the spindle name parameter (#3077 Sname) (from 1 to 9). For others, command with the spindle number. These settings depend on the MTB specifications.

### Detailed description

(1) The spindle selection commands are modal G codes. The status is maintained until the command is changed.

(2) The spindle control mode at power-ON or reset is determined in the MTB specifications (parameters "#1199 Sselect" "#1534 SnG44.1", and "#12090 SnG43.1"). The state when the power is turned ON or reset is as follows.

| | | |
|---|---|---|
| G group 20 modal state: | Set with the basic specification parameter "#1199 Sselect".<br>0: G43.1<br>1: G44.1<br>2: G47.1 | |
| G43.1 spindle designation:<br>(*3) | Set with the basic specification parameter "#12090 SnG43.1". (*1) | |
| | Spindle number method<br>0: 1st spindle<br>1: 1st spindle<br>2: 2nd spindle<br>3: 3rd spindle<br>:<br>8: 8th spindle<br>9: 1st spindle | Spindle name method<br>0: 1st spindle<br>1: Spindle with spindle name "1"<br>2: Spindle with spindle name "2"<br>3: Spindle with spindle name "3"<br>:<br>8: Spindle with spindle name "8"<br>9: Spindle with spindle name "9" |
| G44.1 spindle setting:<br>(*3) | Set with the basic specification parameter "#1534 SnG44.1". (*2) | |
| | Spindle number method<br>0: 2nd spindle<br>1: 1st spindle<br>2: 2nd spindle<br>3: 3rd spindle<br>:<br>8: 8th spindle<br>9: 2nd spindle | Spindle name method<br>0: 2nd spindle<br>1: Spindle with spindle name "1"<br>2: Spindle with spindle name "2"<br>3: Spindle with spindle name "3"<br>:<br>8: Spindle with spindle name "8"<br>9: Spindle with spindle name "9" |

(*1) If a spindle number that does not exist is set, the 1st spindle will be used.

(*2) If a spindle number that does not exist is set, the 2nd spindle will be used.

(*3) There are two types of spindle specification methods: spindle number method and spindle name method.
Which method is used depends on the MTB specifications (parameter "#3077 Sname").

(3) If the spindle function (S) command is designated in the same block as for the spindle selection command, the spindle that is targeted for the command varies depending on the sequence of the spindle selection command, D address, and S command.

| | | |
|---|---|---|
| When the S command succeeds the G43.1/G44.1/D address: | G43.1 S___; | Follows the G43.1 or G44.1 mode in the same block. |
| | G44.1 S___; | |
| | G44.1 D__ S__; | |
| When the S command precedes the G43.1/G44.1/D address: | S___ G43.1; | Follows the G43.1 or G44.1 mode before the command block. |
| | S___ G44.1; | |
| | S___ G44.1 D__; | |
| When the S command is between G44.1 and the D address: | G44.1 S__ D__; | The D address is disabled.<br>Follows the G44.1 mode in the same block.<br>(Equivalent to "G44.1 S__;".) |

(4) When the D address is in the same block as for G44.1, only the D address following G44.1 is valid. If another command address is between G44.1 and the D address, it is not handled as the D address of G44.1.

(5) When another G code is commanded in the same block as for the arbitrary spindle control command (G44.1D_), a program error (P45) will occur.

(6) Commands can be issued from any part system.

(Example) 1st part system: The G43.1 spindle number is set to "1" and the G44.1 spindle number is set to "2".
2nd part system: The G43.1 spindle number is set to "1" and the G44.1 spindle number is set to "2".

| Program currently being executed | | Rotation speed | |
|---|---|---|---|
| **1st part system** | **2nd part system** | **1st spindle** | **2nd spindle** |
| G43.1;<br>G97 S1000;<br>: | G43.1;<br>G96;<br>: | S1000 (r/min) | |
| S2000;<br>: | | S2000 (r/min) | |
| G44.1 S500;<br>: | G96 S200;<br>: | S200 (m/min) | S500 (r/min) |
| G43.1 ;<br>: | G96 S100;<br>: | S100 (m/min) | |
| S3000;<br>: | G44.1 G96 S300;<br>: | S3000 (r/min) | S300 (m/min) |
| S2=3000<br>: | S1=1000<br>: | S1000 (r/min) | S3000 (r/min) |

### Spindle control rights

If the constant surface speed control, S command and spindle related M command are commanded randomly from each part system to one spindle, the spindle may not operate correctly. For example, if S is commanded (feed per minute) from the 2nd part system ($2) during constant surface speed control with 1st part system ($1), the rotation speed will not change from the 1st part system side, and the actual rotation speed will relay on the 2nd part system from which S was commanded last. These commands must be commanded from only one part system, or commanded simultaneously while using standby, etc.

<table>
<tr><th></th><th colspan="2">Program currently being executed</th><th>Rotation speed</th></tr>
<tr><th></th><th>1st part system</th><th>2nd part system</th><th>1st spindle rotation speed [Control right]</th></tr>
<tr><td></td><td>G43.1 ;<br>:</td><td>G43.1 ;<br>:</td><td rowspan="2"></td></tr>
<tr><td></td><td>G00 X50. ;<br>:</td><td rowspan="4">G00 X50. ;<br>:<br><br>G01 X30. ;<br>:</td></tr>
<tr><td></td><td>S100 ;<br>:</td><td rowspan="3">S100 (r/min)<br>[Part system 1]</td></tr>
<tr><td></td><td></td></tr>
<tr><td></td><td>G01 X10. ;<br>:</td></tr>
<tr><td>After this, the 1st part system performs machining with S200 even if it was intended that S100 be used.</td><td rowspan="2"><br><br>:</td><td>S200;<br>:<br>G01 X10. ;<br>:</td><td>S200 (m/min)<br>[Part system 2]</td></tr>
</table>

[Spindle control right transition conditions] Case in which the G43.1 spindle number is set to "1" and the G44.1 spindle number is set to "2"

(1) The part system that commanded the S command last has the spindle control rights.

<table>
<tr><th colspan="2">Program currently being executed</th><th colspan="2">Control rights</th></tr>
<tr><th>1st part system</th><th>2nd part system</th><th>1st spindle control rights</th><th>2nd spindle control rights</th></tr>
<tr><td>G43.1 ;<br>:</td><td>G43.1 ;<br>:</td><td></td><td rowspan="3"></td></tr>
<tr><td rowspan="2">G97 S1000 ;<br>:</td><td></td><td rowspan="2">1st part system</td></tr>
<tr><td>G00 X50. ;<br>:</td></tr>
<tr><td></td><td>G96 S200 ;<br>:</td><td rowspan="4">2nd part system</td><td></td></tr>
<tr><td>G44.1 S500 ;<br>:</td><td>S100;<br>:</td><td rowspan="2">1st part system</td></tr>
<tr><td>G43.1 ;<br>:</td><td>G44.1 S300;<br>:</td><td rowspan="3">2nd part system</td></tr>
<tr><td>S3000;<br>:</td><td></td><td>1st part system</td></tr>
<tr><td>S2=3000<br>:</td><td>S1=1000<br>:</td><td>2nd part system</td><td>1st part system</td></tr>
</table>

(2) If different S commands are executed simultaneously in two part systems, the part system with the larger part system No. will have the priority. That part system will also have the control rights.

| Program currently being executed | | Rotation speed |
|---|---|---|
| 1st part system | 2nd part system | 1st spindle rotation speed [Control right] |
| G43.1 ;<br>: | G43.1 ;<br>: | |
| | S200 ;<br>: | S200 (r/min)<br>[Part system 2] |
| S300 ;<br>: | : | S300 (r/min)<br>[Part system 1] |
| S100 ;<br>: | S200 ;<br>: | S200 (r/min)<br>[Part system 2]<br>(*1) |
| : | : | |

(*1) If different S commands are executed simultaneously in the 1st and 2nd part systems, the 2nd part system will have priority. The 2nd part system will also have the control rights.

## Relationship with other functions

The following functions change after the spindle selection command.

### Spindle clamp speed command

The spindle clamp rotation speed (G92) is commanded for the spindle designated with the spindle selection command. Specify the spindle clamp rotation speed for each spindle. The specified clamp rotation speed is maintained when the target spindle is changed by the spindle selection command.

### Feed per revolution (Synchronous feed)

The feedrate command in the feed per rotation (synchronous feed) mode is equivalent to the feedrate per rotation of the spindle designated with the spindle selection command.

### Dwell (revolution-based designation)

The G04 dwell command in the G95 mode follows the rotation speed of the spindle specified in the spindle selection command.

### Thread cutting

The thread cutting command follows the rotation speed of the spindle specified in the spindle selection command. In the G47.1 mode, the command follows the rotation speed of the 1st selected spindle. This is also applied to variable lead thread cutting, circular thread cutting, and thread cutting cycle.

### S command (S*****, S○=*****), constant surface speed control

| Function | G43.1 mode | G44.1 mode |
|---|---|---|
| S command in G97/G96<br>Constant surface speed control | Command control for the 1st selected spindle | Command control for the 2nd selected spindle |

**Note**

(1) Using the S○=***** command, the 2nd selected spindle can be commanded in the G43.1 mode, and the 1st selected spindle in the G44.1 mode. However, the rotation speed must be specified in the G96 mode.

| (Example 1) S1: 1st selected spindle, S2: 2nd selected spindle | Rotation speed | |
|---|---|---|
| | 1st selected spindle | 2nd selected spindle |
| G43.1;<br>G97 S1000 (Same as for G97 S1=1000)<br>: | S1000 (r/min) | 0 (r/min) |
| S2=2000;<br>: | | S2000 (r/min) |
| G96 S100;<br>: | S100 (m/min)<br>(*1) | |
| S2=2500;<br>: | | S2500 (r/min) |
| G44.1 S200;<br>: | | S200 (m/min) |
| S1=3000;<br>: | S3000 (r/min) | |
| G97 S4000;<br>: | | S4000 (r/min) |

(*1) With the G44.1 command, the constant surface speed control is switched to the 2nd selected spindle, and the 1st selected spindle remains set to the rotation speed specified in G44.1 S200;. The rotation speed changes to 3000 (r/min) with the S1=3000; command.

### Sub part system control II

The G command modal at start of a sub part system is set to the initial G command modal regardless of the G command modal of the called part system.

**Precautions**

(1) The spindle rotation speed upper/lower limit over signal is output to each spindle regardless of the spindle selection command.

(2) The multiple-spindle command (S○=****) cannot be issued in the G47.1 modal. If the command is issued, a program error (P33) will occur.

(3) Refer to the "Spindle control rights" section of the detailed description for spindle control rights.

# 10.5 Spindle Position Control (Spindle/C Axis Control)

## Function and purpose

This function controls a spindle as the rotary axis. After switching the spindle to the rotary axis, the positioning and the interpolation between the spindle and other NC axes can be operated in the same way as the NC axis by executing the position command (the movement command). Using this function, the NC axis for controlling the spindle stock as the rotary axis or the machinery for switching the spindle and NC axis (such as a gear switching machinery) had been necessary for controlling a spindle stock readily as the rotary axis, but they are not necessary with this function.
For information on how to validate or invalidate this function, each setting to use this function, and the mechanism of your machine, refer to the specifications or the instruction manual issued by the MTB.
There are two methods to switch the spindle and rotary axis: PLC signal method and program command method. The available method depends on the MTB specifications (parameter "#3129 cax_spec/bit0"). For details, refer to the specifications issued by the MTB.
This section describes the program command method.
In this manual, the state of controlling an axis as a spindle is referred to as "spindle mode", and the state of controlling an axis as a rotary axis is referred to as "C axis mode".

[Spindle mode] [C axis mode]

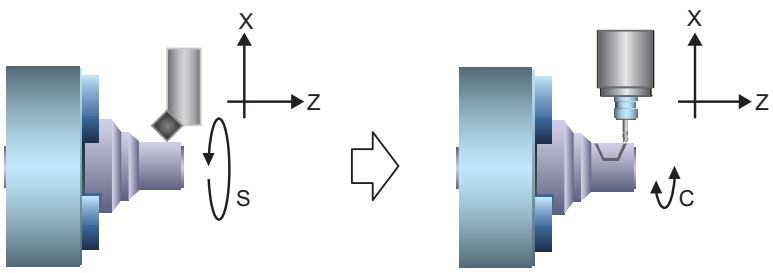


[Process 1]
Turning machining

[Process 2]
Contour machining

The PLC signal processing and operation depends on the MTB specifications. Refer to the instruction manual issued by the MTB for details.

### Coordinate zero point and zero point adjustment in C axis mode

For the encoder-based spindle position control (PLG and external encoder), set the Z phase position of the encoder as the first reference point of the C axis. This first reference point is used as the coordinate zero point; however, the spindle zero point position can be adjusted with the spindle/C axis zero point return shift amount parameter, which is determined in the MTB specifications. This parameter is determined in the MTB specifications (parameter "#3113 cax_sft").

### Program command method

(1) In the machining program, the program switches to the C axis mode with G00 command, and to the spindle mode with S command. The C axis servo OFF signal (*SVFn) must be always kept ON while the program command method is selected. This depends on the MTB specifications.
When the servo OFF signal is set to OFF, operations are performed as follows.

- The mode cannot be switched from the spindle mode to the C axis mode. However, it can be switched from the C axis mode to the spindle mode.
- In the spindle mode, the axis does not run as a spindle even if the forward run command (SRN) or reverse run command (SRI) is executed.
- In the C axis mode, an operation error (M01 0005) occurs if the movement command is executed. In the servo OFF mode, operations follow the setting of the parameter "#1064 svof" (error correction) MTB specifications).

(2) It depends on the MTB specifications (the parameter "#3129 cax_spec/bit2") either the spindle mode or the C axis mode is set when the power is turned ON.
If the power is turned ON in the C axis mode setting, the mode shifts to the C axis mode.
Switching to the C axis mode is performed with the zero point return type or deceleration stop type.
For Z phase detection, the spindle rotates in the C axis zero point return direction (*2) at the C axis zero point return speed (*1).

(*1) Depends on the MTB specifications (parameter "#3112 cax_spd").

(*2) Depends on the MTB specifications (parameter "#3106 zrn_typ/bit9, bitA").

(3) It depends on the MTB specifications (the parameter "#3129 cax_spec/bit3") either the spindle mode or the C axis mode is set when NC is reset.

## Command format

### Switching from spindle mode to C axis mode (C axis)

| |
|---|
| **G00 C__ ;** |

| | |
|---|---|
| C | Target C axis in C axis mode |

- Command "G00 C_ " in the NC program during the spindle mode. The axis is positioned directly to the specified position.
  The non-interpolation positioning for each axis is performed by specifying "G00 X__ Z__ C__" regardless of the G00-interpolation OFF parameter ("#1086 G0Intp" in the MTB specifications) setting, and C axis is switched to the C axis mode.
- Only the G00 command is valid to switch the mode. If the mode is commanded with another G code, it causes a program error (P430).
- Designate the axis for spindle position control with the absolute address or absolute command (G90). If the axis is designated with the incremental address or incremental command (G91), it causes a program error (P32).
- The zero point return type (*1) is set at switching, and the direction to return from the rotation mode to the zero point follows the rotation direction (*2). The direction for returning from the stop mode to the zero point and the interpolation mode depend on the MTB specifications (parameters "#3106 zrn_typ/bit9,bitA", "#3106 zrn_typ/bitD,bitE" and "#1256 set28/bit1").

  (*1) Type to necessarily return to the zero point when switching from the spindle mode to the C axis mode. This depends on the MTB specifications (parameter "#3106 zrn_typ/bit8").

  (*2) Depends on the MTB specifications (parameter "#3106 zrn_typ/bitB").

- If the Z phase is not detected and if switching is commanded, the spindle is rotated in the zero point return direction (*4) at the zero point return speed (*3). Then, the zero point return operation is executed after the Z phase detection.

  (*3) Depends on the MTB specifications (parameter "#3112 cax_spd").

  (*4) Depends on the MTB specifications (parameter "#3106 zrn_typ/bitA-9").

[C axis mode switching conditions]

When switching is commanded, all the following conditions must be satisfied.

- The C axis servo OFF signal (*SVFn) is ON.

### Switching C axis mode to spindle mode

- The switching is performed with the spindle forward run signal (SRN) ON or the spindle reverse run signal (SRI) ON and the S command.
- The switching is performed with the startup of the spindle forward run signal (SRN) or the spindle reverse run signal (SRI).

[Spindle mode switching condition]

When switching is commanded, all the following conditions must be satisfied.

- The C axis servo OFF signal (*SVFn) is ON.
- The C axis selection signal (CMD) is OFF.
- The C axis is stopped.

## Detailed description

### Mode switching

(1) Example in which the mode is switched to the spindle mode with the forward run command and the rotation command (S command)
M03 command -> Forward run command (SRN) ON and reverse run command (SRI) OFF
M04 command -> Reverse run command (SRI) ON and forward run command (SRN) OFF

| Program example | Mode | Description |
|---|---|---|
| M03 S1000;<br>:<br>: | Spindle mode | The spindle rotates at forward run speed 1000 (r/min). |
| G00 C90.; | C axis mode | The axis is positioned at 90 degrees directly based on the rotation mode.<br>After positioning, the mode is switched from the spindle mode to the C axis mode. |
| G01 X10. C20. F100;<br>: | | In the C axis mode, the spindle can be commanded as the rotary axis.<br>In the C axis mode, interpolation with another NC axis is possible. |
| M03 S1500;<br>:<br>: | Spindle mode | The mode is switched from the C axis mode to the spindle mode with the forward run command and rotation command (S command).<br>After being switched to the spindle mode, the spindle rotates at forward run speed 1500 (r/min). |
| G00 X20.C270.; | C axis mode | The axis is positioned at 270 degrees directly based on the rotation mode, and stops at the position. Simultaneously, the X axis is positioned at 20mm with interpolation.<br>After positioning, the mode is switched from the spindle mode to the C axis mode. |

(2) Example in which the mode is switched to the spindle mode by a change from the forward run command to the reverse run command
M03 command -> Forward run command (SRN) ON and reverse run command (SRI) OFF
M04 command -> Reverse run command (SRI) ON and forward run command (SRN) OFF

| Program example | Mode | Description |
|---|---|---|
| M03 S1000;<br>:<br>: | Spindle mode | The spindle rotates at forward run speed 1000 (r/min). |
| G00 C90.; | C axis mode | The axis is positioned at 90 degrees directly based on the rotation mode.<br>After positioning, the mode is switched from the spindle mode to the C axis mode. |
| G01 X10. C20. F100 ;<br>: | | In the C axis mode, the spindle can be commanded as the rotary axis.<br>In the C axis mode, interpolation with another NC axis is possible. |
| M4;<br>:<br>: | Spindle mode | The mode is switched from the C axis mode to the spindle mode with the reverse run command.<br>After being switched to the spindle mode, the spindle rotates at reverse run speed 1000 (r/min). |
| G00 X20.C270.; | C axis mode | The axis is positioned at 270 degrees directly based on the rotation mode, and stops at the position. Simultaneously, the X axis is positioned at 20 mm with interpolation.<br>After positioning, the mode is switched from the spindle mode to the C axis mode. |

(3) Example in which the mode is not switched from the C axis mode to the spindle mode
M03 command -> Forward run command (SRN) ON and reverse run command (SRI) OFF

| Program example | Mode | Description |
|---|---|---|
| M03 S1000; | Spindle mode | The spindle rotates at forward run speed 1000 (r/min). |
| : | | |
| : | | |
| G00 C90.; | C axis mode | The axis is positioned at 90 degrees directly based on the rotation mode.<br>After positioning, the mode is switched from the spindle mode to the C axis mode. |
| G01 X10. C20. F100; | | In the C axis mode, the spindle can be commanded as the rotary axis.<br>In the C axis mode, interpolation with another NC axis is possible. |
| : | | |
| M3; | C axis mode | The rotation command (S command) is omitted between the forward run commands, and the rising edge (change) of the forward run command is not detected; therefore, the mode is not switched to the spindle mode. The forward run command must be changed from OFF to ON with the rotation command (S command) or M3 command. |
| : | | |
| : | | |

## Switching operation

When the program command method is selected, switching operation is performed with the zero point return type.

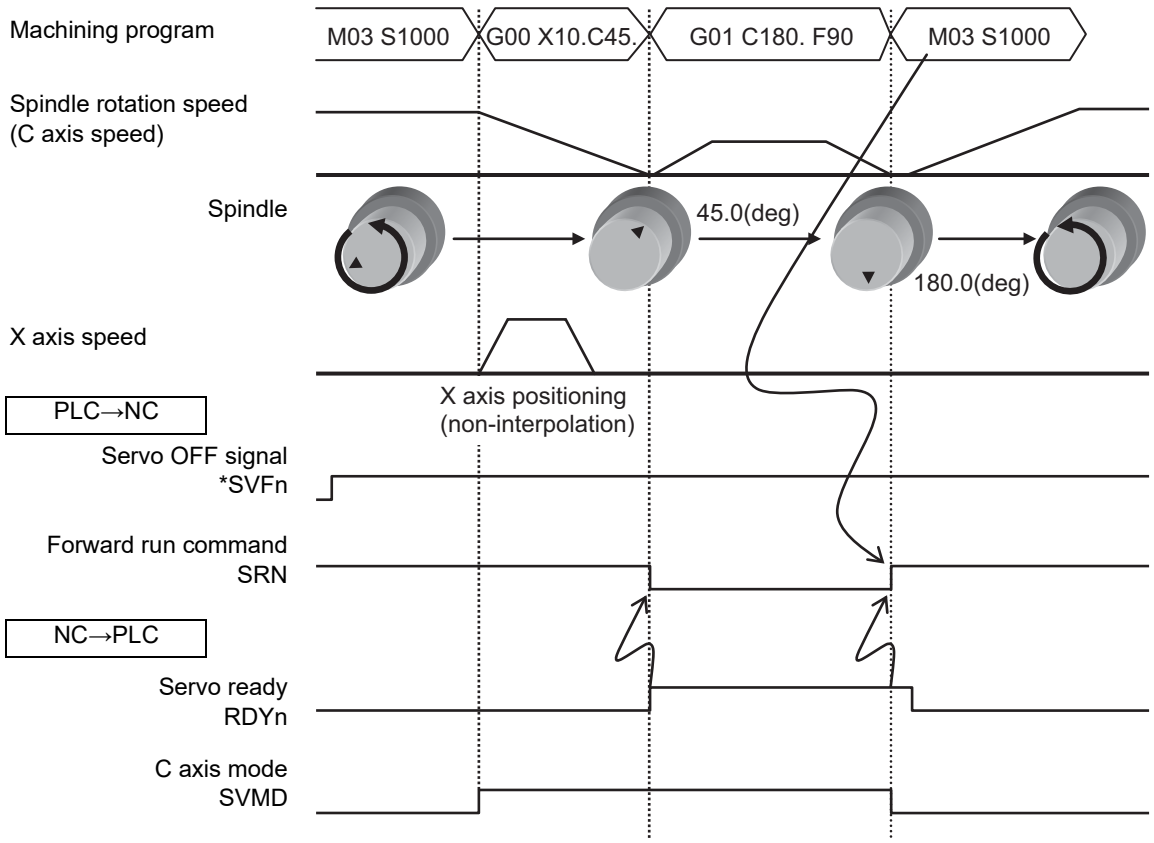

### Manual operation with the program command method selected

To rotate the spindle/C axis as the C axis in the manual operation mode, change the "C axis selection" signal (CMOD) from OFF to ON to switch to the C axis mode while the "Servo OFF" signal (*SVFn) is ON. When switching to the spindle mode, change the C axis selection signal from ON to OFF. The switching operation is performed with the zero point return type or deceleration stop type. (Refer to "Designating the zero point return type or deceleration stop type".) In the C axis mode, the axis can be moved by selecting the manual mode (jog mode, handle mode, incremental feed mode, manual arbitrary-feed mode, or reference position return mode).

[C axis switching in manual operation mode (zero point return type)]

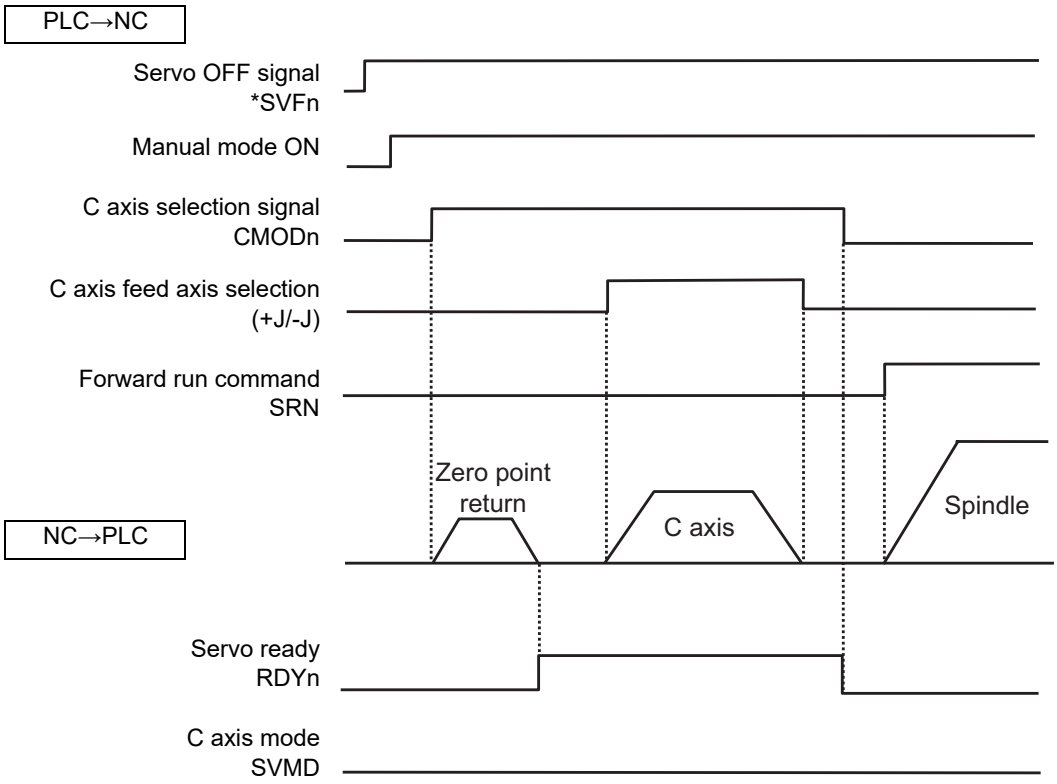


If the C axis selection signal (CMOD) is changed while either the C axis mode or spindle mode is selected in the program command method, the mode is set as follows. The mode is not switched to the C axis mode or spindle mode in the program command method during automatic running when the C axis selection signal is turned ON. Switching follows the state of the C axis selection signal (CMOD).

| **C axis selection signal (CMOD)** | **During automatic operation** | | **During reset** | |
|---|---|---|---|---|
| | **C axis mode by "G00 C_ command"** | **Spindle mode by "S command"** | **C axis mode** | **Spindle mode** |
| OFF to ON | C axis mode | C axis mode | C axis mode | C axis mode |
| ON to OFF | C axis mode | Spindle mode | Spindle mode | Spindle mode |
| Remarks | | | Whether the mode is switched to the C axis mode during reset depends on the MTB specifications.<br>(#3129 cax_spec/bit2)<br>(#3129 cax_spec/bit3) | |

### Designating the zero point return type or deceleration stop type

The operation differs depending on the method to switch from the spindle mode to the C axis mode. (The method depends on the MTB specifications.)

| Method to switch | Operation contents |
|---|---|
| G00 command | The operation is performed with the zero point return type regardless of the setting of the parameter "#3106 zrn_typ/bit8" (Zero point return specifications). |
| "C axis selection" signal (CMOD) | The operation is performed as shown in the table below depending on combination of the parameters. |
| The power is turned ON when control mode at power ON is C axis mode ("#3129 cax_spec/bit2" is set to "1"). | |

| #1711 cfg11 bit3 | #3106 zrn_typ bit8 | #3129 cax_spec bit1 | Operation contents |
|---|---|---|---|
| 0 | - | - | The zero point return to the Z phase position is performed. |
| 1 | 0 | - | The zero point return to the Z phase position is performed. |
| | 1 | 0 | The coordinate of the deceleration stop position is established by using the Z phase position as the coordinate zero point. |
| | | 1 | The deceleration stop position is used as the coordinate zero point. |

## Relationship with other functions

### Spindle forward-run start (SRN) and spindle reverse-run start (SRI)

The mode is switched to the C axis mode regardless of the state of the spindle forward-run start (SRN) or spindle reverse-run start (SRI) signal. In the C axis mode, spindle forward-run start and spindle reverse-run start are invalid. When [PLC signal method] is selected, the spindle rotates by carrying out the spindle forward-run start or spindle reverse-run start again (OFF to ON operation) after the C axis mode has been canceled.
When [Program command method] is selected, the spindle rotates by carrying out the spindle forward-run start or spindle reverse-run start again (OFF to ON operation) in the C axis mode or by issuing the S command with the spindle forward-run start or spindle reverse-run start set ON.

### Spindle orientation signal (ORC)

[M8 Series]

The mode is switched to the C axis mode regardless of the state of the "Spindle orientation command" signal (ORC). However, in the C axis mode, the "Spindle orientation command" signal (ORC) is invalid.

[C80]

The "Spindle orientation command" signal (ORC) is invalid in the C axis mode. The spindle position control command (Spindle/C axis control) is also invalid under spindle orientation.

### Spindle gear switching

Gear switching cannot be performed in the C axis mode. After the mode has been changed from the C axis mode to the spindle mode, gear switching is performed. Also, the mode cannot be switched to the C axis mode during gear switching. After gear switching has been completed, the mode is switched to the C axis mode.

### Coil switching

Coil switching is invalid in the C axis mode. Conduct coil switching before switching to the C axis mode. If switching to the C axis mode is commanded during coil switching, switching to the C axis mode is executed after coil switching has been completed.

### Spindle synchronization control I/II, tool spindle synchronization I/II, and spindle superimposition control

(1) Spindle synchronization control I/II and spindle superimposition control

If the reference spindle, the synchronized spindle, or the superimposed spindle under the synchronization or superimposition control is switched to the C axis mode, it causes an operation error (M01 1026). Also, if the reference spindle command, synchronized spindle command, or superimposed spindle command is issued to the spindle in the C axis mode, it causes an operation error (M01 1026). The alarm can be deactivated by canceling the synchronization command or the C axis mode.

<Note>
- When the specifications of the C axis control mode under spindle synchronization are valid, this function enables the spindle position control by the reference spindle under spindle synchronization control.

(2) Tool spindle synchronization IA/IB (spindle-spindle polygon)

If the rotary tool axis (spindle) under tool spindle synchronization control or the workpiece axis (spindle) is switched to the C axis mode, it causes an operation error (M01 1026). Also, if the rotary tool axis command or workpiece axis command is issued to the spindle in the C axis mode, it causes an operation error (M01 1026). The alarm can be deactivated by canceling the synchronization command or the C axis mode.

(3) Tool spindle synchronization IC (spindle-NC axis polygon)

If the rotary tool axis (spindle) under tool spindle synchronization control or the workpiece axis (spindle) is switched to the C axis mode, it causes an operation error (M01 1026). Also, if the workpiece axis command is issued to the spindle in the C axis mode, it causes an operation error (M01 1026). The alarm can be deactivated by canceling the synchronization command or the C axis mode.
If necessary, the spindle/C axis can be set to a tool axis (NC axis). Make sure to switch to the C axis mode before issuing the tool spindle synchronization IC command.

(4) Tool spindle synchronization II (Hobbing)

If the workpiece axis (spindle) under tool spindle synchronization control is switched to the C axis mode, it causes an operation error (M01 1026). Also, if the hobbing axis command is issued to the spindle in the C axis mode, it causes an operation error (M01 1026). The alarm can be deactivated by canceling the synchronization command or the C axis mode.
If necessary, the spindle/C axis can be set to a workpiece axis. Make sure to switch to the C axis mode before issuing the tool spindle synchronization II command.

## Spindle override

The spindle override is invalid for the zero point return operation at switching to the C axis mode. In the C axis mode, the spindle override is invalid. The cutting feed override or rapid traverse override of the NC axes is valid in the C axis mode.

## Guide bushing spindle synchronization and spindle-mode servo motor control

The spindle position control is valid, excluding the following differences.

(1) Speed pattern of the zero point return operation

The zero point return from the stop mode is performed by the same operation as for the normal spindle. However, when the spindle returns from the rotation mode to the zero point, the rotation speed decelerates up to the C axis zero point return speed with the multi-step acceleration/deceleration pattern. After the C axis zero point return speed has been reached, the spindle inclines to the zero point, and stops while decelerating at the constant speed. The multi-step acceleration/deceleration pattern and C axis zero point return speed depend on the MTB specifications (parameters "#3054 sptc1" to "#3061 spdiv1" and "#3112 cax_spd").

**Stop mode**

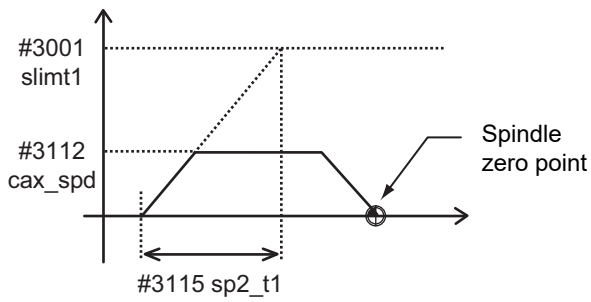


**Rotation mode**

Multi-step acceleration/deceleration

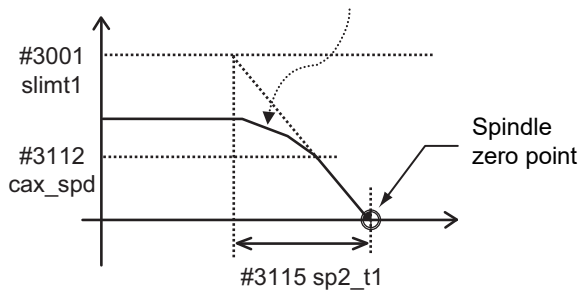


## Analog spindle, spindle control with pulse train output

The spindle position control is invalid.

## Absolute position detection

The absolute position detection is invalid in the C axis mode.

## Constant surface speed control

When Program command method is selected, the mode is switched from the C axis mode to the spindle mode if the surface speed command S (m/min) and the spindle forward-run start (SRN) or spindle reverse-run start (SRI) signal is set to ON.

### Control axis superimposition control and arbitrary axis superimposition

(1) If the spindle is commanded as the superimposition-related axis in the spindle mode, it causes an operation error (M01 1004).

(2) When the axis in the C axis mode is set as an axis related to the control axis superimposition or arbitrary axis superimposition, the control axis superimposition control or arbitrary axis superimposition is canceled if the mode is switched from the C axis mode to the spindle mode. When [Program command method] is selected, the control axis superimposition or arbitrary axis superimposition is canceled by setting the servo OFF signal (*SVFn) off.

### Control axis synchronization between part systems

(1) If the spindle is commanded as the axis related to the control axis synchronization between part systems in the spindle mode, it causes an operation error (M01 1037).

(2) When the axis in the C axis mode is set as the axis related to the control axis synchronization between part systems, the synchronization relation cannot be maintained if the mode is switched from the C axis mode to the spindle mode. Do not switch from the C axis mode to the spindle mode.

### Manual arbitrary reverse run

When the program command method is selected, "block switched from spindle mode to C axis mode (example: G00 C_) and "block switched from C axis mode to spindle mode (example: M03 S1000)" is handled as a reverse run prohibited block. The reverse run cannot be carried out back through blocks with the mode switched.

### Mixed control (Cross axis control) and arbitrary axis exchange control

The spindle/C axis can be exchanged in both the C axis mode and spindle mode.
If the spindle/C axis with gain switching valid is exchanged, switch the gain of all NC axes in the destination part system. When the spindle/C axis with gain switching valid is exchanged and moved from the part system, in which the gain of all the NC axes is switched, to another part system, return the gain of all NC axes.

### Coordinate system setting (G92), Local coordinate system setting (G52)

The offset values of the coordinate system setting and local coordinate system setting configured in the C axis mode are retained even in the spindle mode.

After this, whether these offset values designated in the previous C axis mode are to be retained when the spindle mode is switched to the C axis mode depends on the MTB specifications (parameter "#3129 cax_spec/bit5").

## Precautions and restrictions

(1) If the movement is commanded while the servo OFF signal (*SVFn) is set to OFF, it causes an operation error (M01 0005). Reset NC to cancel the error, and set the servo OFF signal on to restart machining. If the spindle command is issued, the spindle does not rotate.

(2) If the servo OFF signal (*SVFn) is set to OFF during C axis movement, it causes an operation error (M01 0005). Reset NC to cancel the error.

(3) To switch from the spindle mode to the C axis mode, issue the G00 command. If a command other than the G00 command is issued, it causes a program error (P430).

(4) The spindle position control axis must be commanded with the absolute address or absolute command (G90). If the incremental address or incremental command (G91) is used, it causes a program error (P32).

(5) When the spindle mode is switched to the C axis mode, in-position check is applied regardless of the deceleration check designation type (*1).

(*1) This designation depends on the MTB specifications (parameter "#1193 inpos").

# 10.6 Spindle Speed Fluctuation Detection; G162/G163

## Function and purpose

When this function is valid and the spindle actual speed fluctuates relative to the programmed speed due to external factors such as load fluctuation, the NC outputs the signal (Spindle speed out of setting range) to PLC and causes the operation error (M01 1105) at the same time. PLC can take the necessary measure for the fluctuation of the spindle speed using the output signal (spindle speed out of setting range) from the NC. The operation error (M01 1105) output from the NC does not stop the cycle operation or the spindle. Whether or not to output the operation error during spindle speed fluctuation detection (G162) depends on the MTB specifications (parameter "#1242 set14/bit2").

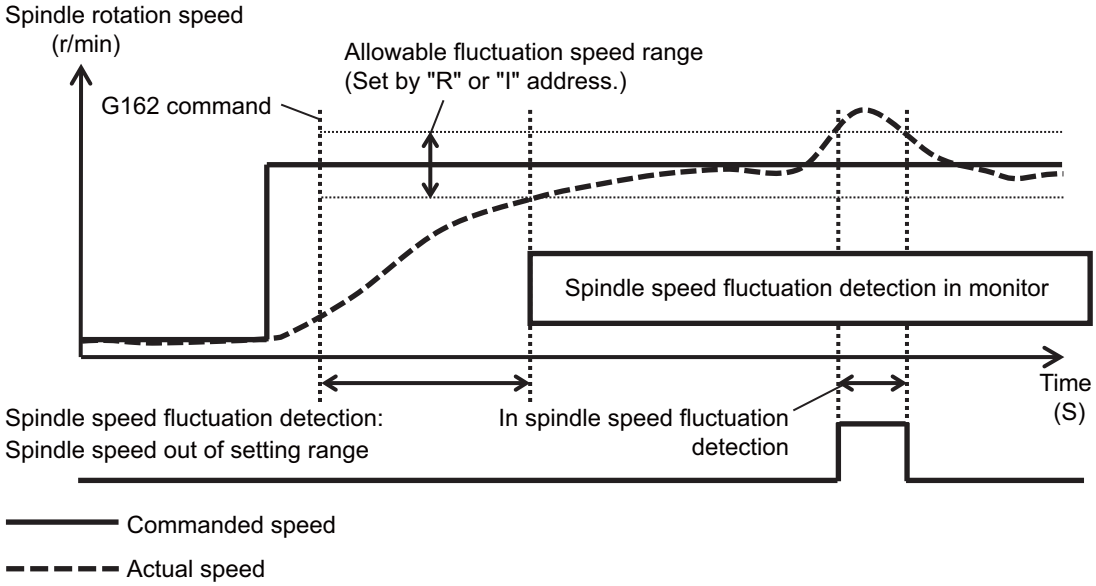


### Term

The following descriptions are the meanings of the terms used in this manual.

| Term | Meaning |
|---|---|
| Spindle command speed | Spindle command speed is the command speed to which the spindle override and the spindle clamp speed have been added. This is the spindle last command speed sent to the spindle drive unit. |
| Spindle actual speed | This is the speed fed back from the spindle, at which the spindle actually runs. |
| Allowable fluctuation range | This indicates the allowable deviation range from the command speed in spindle speed fluctuation detection. The calculation result for the command speed of "spindle speed fluctuation allowance rate" (R address or parameter) or "allowable spindle speed fluctuation range" (I address or parameter), whichever is greater, is used as the allowable fluctuation range.<br>When the calculation result for the command speed of "detection range to achieve spindle speed", which is used to determine whether or not the spindle rotation speed achieves the command speed, is greater than the calculation result for the command speed of "allowable fluctuation rate of spindle speed" or "allowable fluctuation range of spindle speed", the range of "detection range to achieve spindle speed" is used as allowable fluctuation range. |

## Command format

### Starting the spindle speed fluctuation detection

```
G162 S__ P__ Q__ R__ I__ ;
```

| | |
|---|---|
| S | Spindle name of detection target |
| P | Spindle speed fluctuation detection start delay time |
| Q | Spindle up-to-speed detection width |
| R | Allowable fluctuation rate of spindle speed |
| I | Allowable fluctuation range of spindle speed |

### Spindle speed fluctuation detection cancel

```
G163 S__ ;
```

| | |
|---|---|
| S | Spindle name of detection target |

## Detailed description

### Description of each address

| Address | Command range (unit) | Remarks |
|---|---|---|
| S | 1 to 9 | ♦This sets the name of the spindle which performs the spindle speed fluctuation detection. The spindle number is used for this command, but the value set by the parameter (#3077) is used when the spindle name method is valid.<br>♦When this address is omitted from the G162 command, the spindle selected in the commanded part system is treated as the commanded spindle. When this address is omitted from the G163 command, the fluctuation detection for all spindles is canceled.<br>♦When the set spindle is not mounted, the program error (P35) occurs. |
| P | 0 to 99.999(s) | ♦This sets the delay time from the time when the spindle speed fluctuation detection (G162) is commanded to the time to start the fluctuation detection. Also when the spindle command speed changes, the delay time is set. The change of the spindle command speed means the change of the spindle last command sent to the spindle drive unit.<br>♦When this address is omitted, the value set in the parameter "#43071 sp_spd_flc_dtc_p" is used.<br>♦When the command value exceeds the command range, the program error (P35) occurs. |
| Q | 1 to 100 (%) | ♦This sets the range for the spindle speed command, with which the control determines whether the spindle reaches the command speed in order to start fluctuation detection.<br>♦When this address is omitted, the value set in the parameter "#3105 sut" is used.<br>♦When the command value exceeds the command range, the program error (P35) occurs. |

| Address | Command range (unit) | Remarks |
|---|---|---|
| R | 1 to 100 (%) | ♦This sets the allowable fluctuation speed range calculated for the spindle command speed. When the actual spindle speed exceeds the range, the signal is output to PLC and the operation error (M01 1105) occurs. This sets the ratio of the speed deviation to the command speed.<br>♦When this address is omitted, the value set in the parameter "#43072 sp_spd_flc_dtc_r" is used.<br>♦When the command value exceeds the command range, the program error (P35) occurs.<br>♦When the speed deviation for the command speed is smaller than 45 r/min, the allowable range of the speed deviation is 45 r/min. |
| I | 0 to 999999 (r/min) | ♦This sets the allowable fluctuation speed range calculated for the spindle command speed. When the actual spindle speed exceeds the range, the signal is output to PLC and the operation error (M01 1105) occurs. This sets the speed deviation from the command speed.<br>♦When this address is omitted, the value set in the parameter "#43073 sp_spd_flc_dtc_i" is used.<br>♦When the command value exceeds the command range, the program error (P35) occurs. |

## Enabling conditions of the function

(1) This function is valid when the spindle speed fluctuation detection (G162) is commanded during the cycle operation.

(2) When G162 is commanded during the cycle operation, it is valid until G163 command (cancel command), cycle operation end, reset or emergency stop.

(3) If any function that is unusable with this function is enabled while this function is valid, this function is temporarily canceled. After that, when the said unusable function is disabled, this function is enabled.

(4) When G162 is commanded while any unusable function is valid, this function is temporarily canceled. After that, when the said unusable function is disabled, this function is enabled.

## Operation example

### Start timing of spindle speed fluctuation detection

When one of the following conditions is satisfied after G162 command, the spindle speed fluctuation detection starts:

- Case in which the start delay time of the spindle speed fluctuation detection (set by "P") elapses (Refer to (1) figure.)
- Case in which the spindle actual speed is within the detection range to achieve spindle speed (set by "Q") (Refer to (2) figure.)

(1) Case in which the start delay time of the spindle speed fluctuation detection (set by "P") elapses

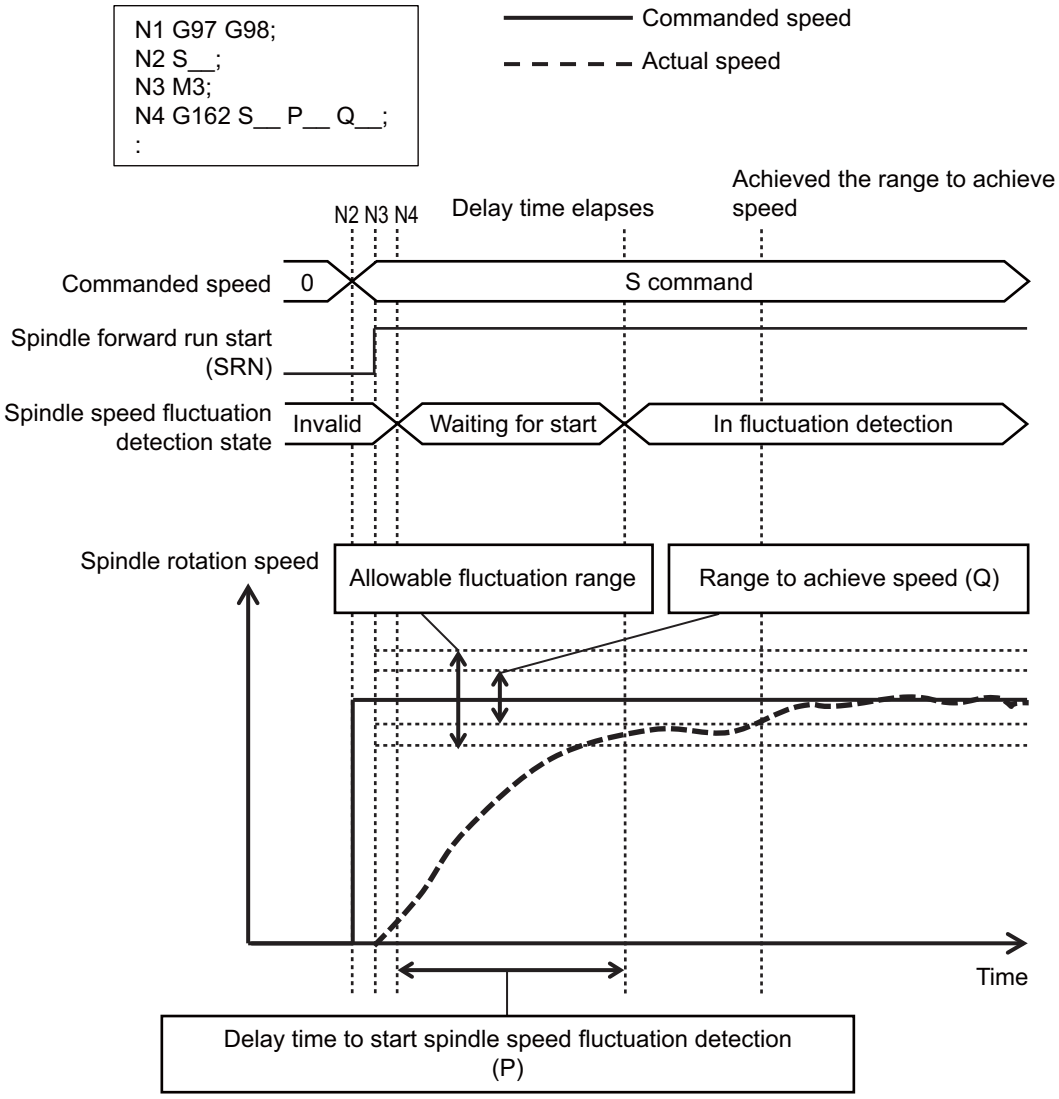

(2) Case in which the spindle actual speed is within the detection range to achieve spindle speed (set by "Q")

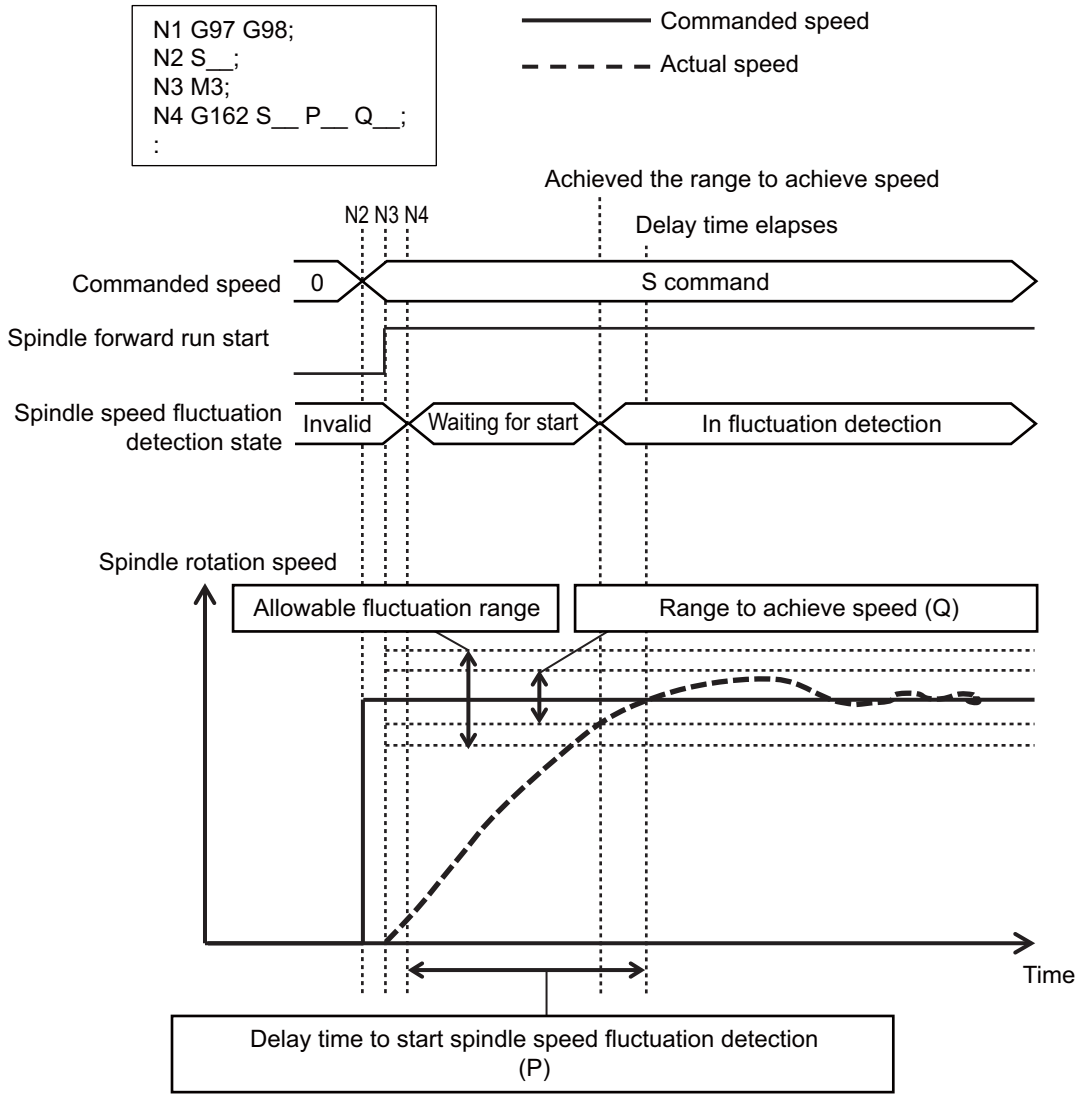

### Fluctuation detection start timing when the spindle command speed is changed

When the spindle command speed is changed by S command or spindle override, the state is the same as the one immediately after G162 command and the fluctuation detection is not performed until the condition of "Start timing of spindle speed fluctuation detection" is satisfied. When this condition is satisfied, the fluctuation detection is started. Also, if the speed of synchronized spindle, which is driven based on the reference spindle speed under synchronization etc., changes, the control interprets that the spindle command speed is changed. (Spindle synchronization control/Polygon machining/Hobbing/Spindle superimposition control)

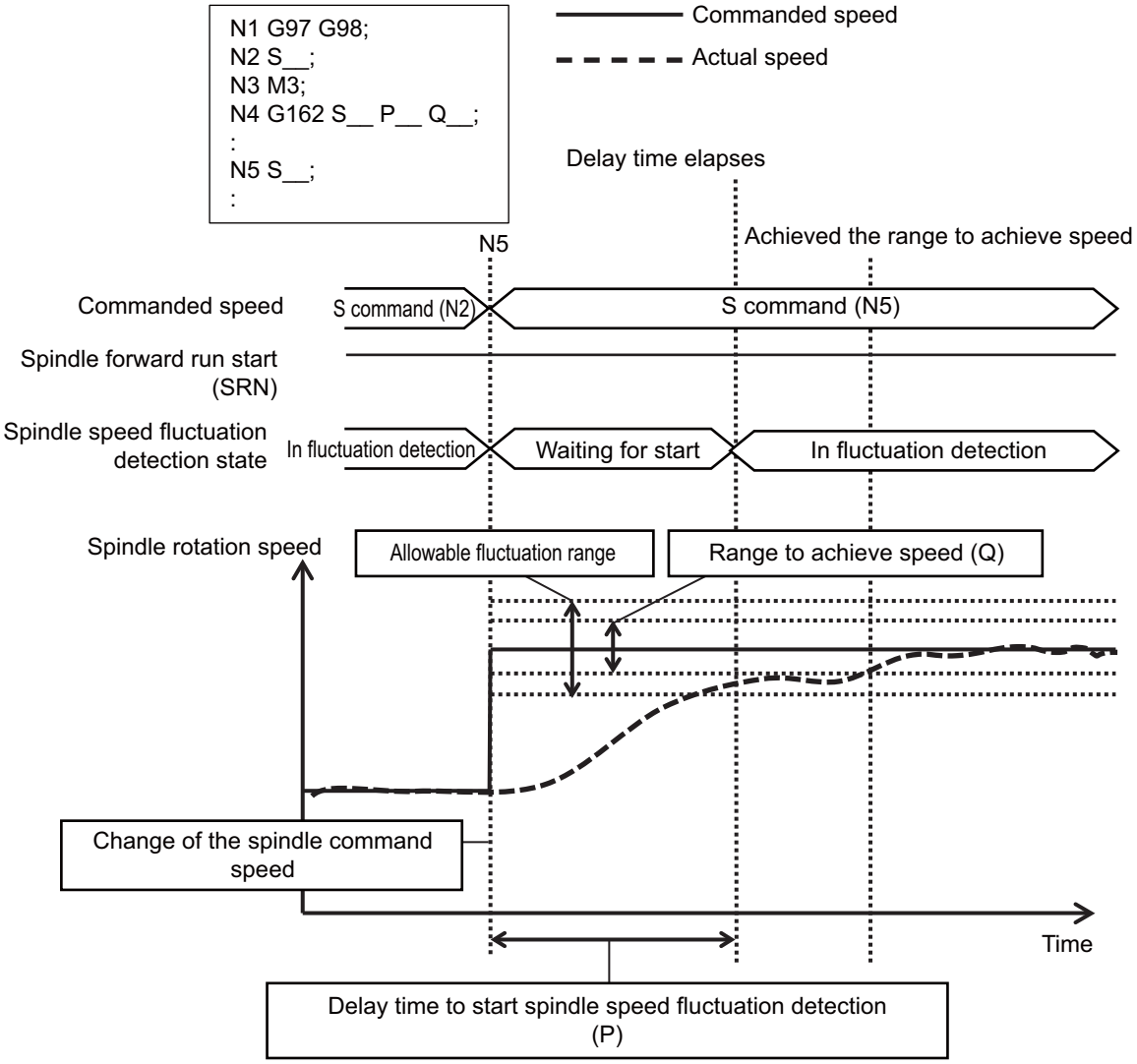


### Temporary cancellation operation of spindle speed fluctuation detection

The spindle speed fluctuation detection function cannot be combined with the following functions. This is because these functions cause the spindle speed to be changed frequently without ensuring the spindle rotation at a constant speed.

- Synchronous tapping (Synchronous tapping cycle/Pecking tapping cycle/Deep-hole tapping cycle/High-speed synchronous tapping)
- Spindle orientation
- C axis mode of spindle position control (spindle/C axis control)

When any of the functions above is enabled while the spindle speed fluctuation detection is enabled, this function is temporarily canceled. After that, when the said unusable function becomes invalid, this function is enabled.
When this function is commanded while an unusable function is running, this function is temporarily canceled. After that, when the said unusable function becomes invalid, this function is enabled. When this function is enabled, the state is the same as the one immediately after G162 command. Fluctuation detection is started if the condition of "Start timing of spindle speed fluctuation detection" is satisfied.

#### When the spindle speed fluctuation detection command (G162) is performed during the spindle speed fluctuation detection

When the command with the exact same settings is given to the axis where this function is enabled, the command is ignored. On the other hand, when at least one of the settings other than S address (P, Q, I, or R) is different, the setting is changed to the new one. After that, the state is the same as the one immediately after G162 command. Fluctuation detection is started if the condition of "Start timing of spindle speed fluctuation detection" is satisfied. Changing the S address means that the spindle speed fluctuation detection is commanded to a different spindle.

## Relationship with other functions

#### Synchronous tapping

This function is temporarily canceled during synchronous tapping (synchronous tapping cycle/pecking tapping cycle/deep-hole tapping cycle/high-speed synchronous tapping).

#### Multiple-spindle control I/II

When G162 command is commanded omitting S address, the operation is performed to the spindle which is selected by multiple-spindle control.

#### Spindle orientation

This function is temporarily canceled during spindle orientation.

#### Spindle position control (Spindle/C axis)

This function is temporarily canceled in the C axis mode. The fluctuation detection can be performed in the spindle mode.

#### Constant surface speed control

Constant surface speed control can be combined with this function. However, the fluctuation detection is not performed unless the fluctuation detection start condition is satisfied each time the spindle speed fluctuates; therefore, the fluctuation detection may not be performed much.

#### Manual arbitrary reverse run

Manual arbitrary reverse run cannot be performed to the command of this function.

## Precautions

(1) While the spindle is stopped, the spindle speed fluctuation detection is not performed.

(2) The spindle speed fluctuation detection is not performed to the speed which is the minimum rotation speed (parameter #3032) or less.

(3) The spindle speed fluctuation detection is not performed during synchronous tapping, spindle orientation, C axis control mode of spindle or C axis.

(4) When any other command is issued at the same time, the program error (P45) occurs.

# 11

# Tool Functions

# 11.1 Tool Functions (T8-digit BCD)

## Function and purpose

The tool functions are also known as T functions and they assign the tool numbers and tool compensation numbers. A numerical value of 8-digit (0 to 99999999) following address T indicates a command using first digits and last digits for a tool number and tool compensation number respectively.
Number of digits for the first/last digits depends on the MTB specifications (parameter "#1097 T1digt"). The available T commands differ according to each machine, so refer to the instruction manual issued by the MTB.

## Command format

| | | |
|---|---|---|
| T ＊＊＊＊＊＊＊ ＊ | T ＊＊＊＊＊＊ ＊＊ | T ＊＊＊＊＊ ＊＊＊ |
| Tool No. / Compensation No. | Tool No. / Compensation No. | Tool No. / Compensation No. |

Refer to the instructions issued by the MTB for the correspondence between the actual tools and the tool Nos. commanded in the program.
BCD codes and start signals are output.
If the T function is designated in the same block as a movement command, the commands may be executed in either one of the following two orders. The machine specifications determine which sequence applies.

(1) The T function is executed after completion of the movement.

(2) The T function is executed simultaneously with the movement command.

Processing and completion sequences are required for all T commands.

## Detailed description

### Determination of T command digit number

Switching between settings of Call T command macro/Does not call T command macro and those of Hold tool length compensation No./Does not hold tool length compensation No. can be made according to the command digit number of the T command. They depend on the MTB specifications (parameter "#1197 Tmac", "#1446 Tlno. hold").

| | |
|---|---|
| #1197 Tmac: | Sets switching between Call T command macro/Does not call T command macro. |
| #1446 Tlno. hold: | Sets switching between Hold tool length compensation No./Does not hold tool length compensation No. |

**Note**

(1) For the determination of T command digit number, the T command character string is checked. In the following cases, the T command is determined to be with No command even if its first digits are "0".

| | |
|---|---|
| When using variables | (Example) "#100=0010;T#100;" is determined to be "T10". |
| When using expressions | (Example) "T[0000+11]; " is determined to be "T11". |
| When putting a command in [ ] | (Example) "T[0012]; " is determined to be "T12". |

(2) For a T command with a decimal point, decimal places are ignored.
(Any digits after the decimal point are not taken into consideration when determining the number of digits.)

# 11.2 T Code Mirror Image for Facing Tool Posts

## Function and purpose

In a machine in which the base turret and facing turret are integrated, this function is used to cut with the facing turret cutter using a program created with the base turret side.
The distance between the two turrets is set in the parameters beforehand.
The mirror image for facing tool posts can be turned ON and OFF with the T command instead of the G68/G69 command.
The T command for the G68 mode and the G69 mode is determined for each tool No. with the following base specification parameters.
These parameter settings depend on the MTB specifications.

| # | Item | | Details | Setting range (unit) |
|---|---|---|---|---|
| 1119 | Tmiron | Select the mirror image of each facing turret with T command | Selects whether the mirror image for facing tool posts with the T command is valid or invalid. | 0: Invalid<br>1: Valid |
| 1203 | TmirS1 | Select turret as facing turret with T command | The turret selection for the T command mirror image for facing tool posts corresponding to tool No. 1 to 32 is set. | 0 to FFFFFFFF |
| 1204 | TmirS2 | Select turret as facing turret with T command | The turret selection for the T command mirror image for facing tool posts corresponding to tool No. 33 to 64 is set. | 0 to FFFFFFFF |

Operation is the same as that for the mirror image for facing tool posts while T code is used as the command method.
For details, refer to "Mirror image for facing tool posts".

# 12

# Tool Compensation Functions

# 12.1 Tool Compensation

## Function and purpose

Tool compensation is performed by the T functions which are commanded with the number following address T. First digits and last digits are used for the tool number and compensation number respectively.
The tool compensation is divided into the tool length compensation and tool nose wear compensation. Assignment of T command digits to the tool No., toll length compensation No., and tool nose wear compensation No depends on the MTB specifications (combination of parameters "#1098 TLno" and "#1097 T1digit"). For the specifications of the machine tool you are using, see the instructions issued by the MTB.
One set of T commands can be issued in one block.

## Command format

### When "#1098 Tlno" (tool length compensation No.) is 0

First digits of a T command indicate tool No. and last digits indicate compensation Nos. (tool length compensation No. and tool nose wear compensation No.).

| Last one digit ("#1097 T1digt" = 1) | Last two digits ("#1097 T1digt" = 0, 2) | Last three digits ("#1097 T1digt" = 3) |
|---|---|---|
| T ＊＊＊＊＊＊＊ ＊<br>Tool No. / Compensation No. | T ＊＊＊＊＊＊ ＊＊<br>Tool No. / Compensation No. | T ＊＊＊＊＊ ＊＊＊<br>Tool No. / Compensation No. |

### When "#1098 Tlno" (tool length compensation No.) is 1

First digits of a T command indicate tool No. and tool length compensation No. and last digits indicate tool nose wear compensation No.

| Last one digit ("#1097 T1digt" = 1) | Last two digits ("#1097 T1digt" = 0, 2) | Last three digits ("#1097 T1digt" = 3) |
|---|---|---|
| Tool length compensation No.<br>T ＊＊＊＊＊＊＊ ＊<br>Tool No. / Tool nose wear compensation No. | Tool length compensation No.<br>T ＊＊＊＊＊＊ ＊＊<br>Tool No. / Tool nose wear compensation No. | Tool length compensation No.<br>T ＊＊＊＊＊ ＊＊＊<br>Tool No. / Tool nose wear compensation No. |

### Note

(1) When multi-part system
There are cases when each part system has tool data and when the part systems share common tool data. The setting of your machine depends on the MTB specifications (parameter "#1051 MemTol").

Parameter #1051 MemTol 0: Tool data provided for each part system
1: Tool data shared by part systems

When common tool data are shared by part systems, same tool command compensation amount is applied to all part systems (when same tool compensation No. is commanded).

## 12.1.1 Tool Compensation Start

### Detailed description

There are two ways to execute tool compensation and these can be selected by parameters: executing compensation when the T command is executed or executing compensation in the block with a movement command instead of performing compensation when the T command is executed.

(1) Compensation with T command execution

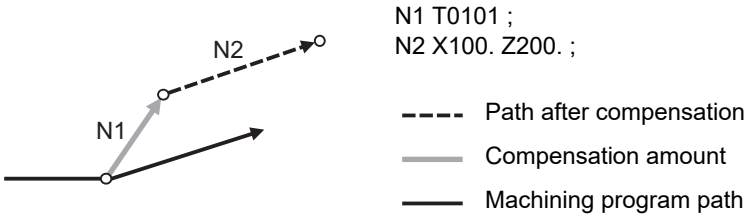


Tool length compensation and tool nose wear compensation are conducted simultaneously.

<Note>

- The movement for a compensation with the T command execution is rapid traverse in a G00 modal. The movement for other modals is cutting feed.
- When performing compensation with T command execution, the path is compensated as a linear movement in a circular modal.
- When performing compensation with T command execution, if the following G commands are issued in the same block as the T command, compensation will not be performed until other G commands are issued.
  Even if an axis is specified by the command, compensation will not be performed to all axes.
  G04: Dwell
  G11: Parameter input by program cancel
  G50.2: Tool spindle synchronization IB/IC cancel
  G51.2: Tool spindle synchronization IB/IC
  G92: Coordinate system setting
  G92.1: Workpiece coordinate system preset
  G111: Axis Name Switch
  G113: Spindle synchronization cancel
  G114.1: Spindle synchronization I
  G114.2: Tool spindle synchronization IA
  G114.3: Tool spindle synchronization II
- The following commands will temporarily cancel the compensation amount for the axis with any movement commanded: automatic reference position return (G28), 2nd, 3rd, and 4th reference position return (G30) or basic machine coordinate system selection (G53).
- If G53 command is issued in the same block as the T command, the compensation amount for the axis with no movement commanded will employ the amount in the previous block.

(2) Compensation with movement command

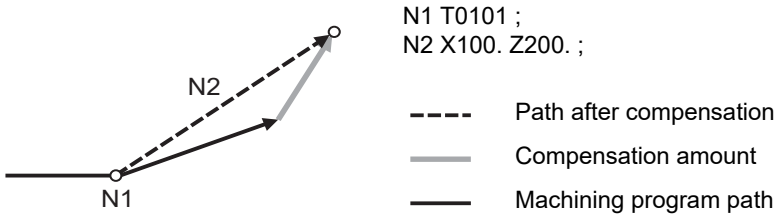


Tool length compensation and tool nose wear compensation are conducted simultaneously.

<Note>

- When performing compensation with a movement command, compensation is performed if the compensation amount is lower than the parameter "#1084 RadErr" when the first compensation is performed with a circular command. If the amount is higher, the program error (P70) will occur. (This also applies when the circular command and T command are in the same block for compensation with T command execution.)

## 12.1.2 Expanded Method of Starting Tool Compensation

### Function and purpose

By setting the parameter "#1100 Tmove", the compensation operation when T is commanded is selected whether that is carried out when the T command is executed or carried out with superimposed on the movement command. (This parameter setting depends on the MTB specifications.)
Also, depending on the setting of the parameter, it is possible to compensate only the wear amount when the T command is executed and to compensate the tool length by superimposing on the movement command. The parameter setting depends on the MTB specifications.

| # No. | Item | Details |
|---|---|---|
| 1100 | Tmove | Designate the timing to perform tool length compensation and wear compensation.<br>0: Compensates when T command is executed.<br>1: Superimposes and compensates with the movement command in the same block where the T command is contained.<br>If there is no movement command in the same block, compensation will be executed after the movement command is superimposed in the next movement command block.<br>2: Compensates wear amount when the T command is executed.<br>Superimposes and compensates a tool length compensation amount with the movement command in the same block.<br>If there is no movement command in the same block, compensation will be executed after the movement command is superimposed in the next movement command block. |
| 1101 | Tabsmv | Designate the type of movement command superimposed when "Tmove" is set to "1" or "2".<br>0: Compensates regardless of the movement command type.<br>1: Compensates only at the movement command in the absolute command. |

**Note**

(1) When "#1100 Tmove" is set to "2", the compensation operation will follow the "#1101 Tabsmv" setting.

### Detailed description

**#1100 = "2" (Superimposes and compensates with the movement command.)**

To compensate only the wear amount when the T command is executed and to compensate for the tool length by superimposing on the movement command, set the "#1100 Tmove" to "2".
The tool length compensation will follow the setting "1" (superimposed on movement command), and the wear compensation will follow the setting "0" (move when the T command is executed).
The compensation operation for each "#1100 Tmove" setting is as shown below.

Tool length compensation amount: 7.000 mm, Wear compensation amount: 0.500 mm

| Machining program example | Machine position | | |
|---|---|---|---|
| | "#1100 Tmove" = 0 (*1) | "#1100 Tmove" = 1 | "#1100 Tmove" = 2 |
| G28 X.;<br>G00 T116 ;<br>G00 X100.;<br>: | 0.000<br>7.500<br>107.500 | 0.000<br>0.000<br>107.500 | 0.000<br>0.500<br>107.500 |

(*1) This is applied when "#1296 ext32/bit4" is set to "0" (OFF). This parameter depends on the MTB specifications.

<Note>

- When performing wear compensation with T command execution, if the following G commands are issued in the same block as the T command, compensation will not be performed until other G commands are issued.
  However, if an axis is specified by the command, compensation will be performed only to the specified axis.

  G04: Dwell
  G11: Parameter input by program cancel
  G50.2: Tool spindle synchronization IB/IC cancel
  G51.2: Tool spindle synchronization IB/IC
  G92: Coordinate system setting
  G92.1: Workpiece coordinate system preset
  G111: Axis name switch
  G113: Spindle synchronization cancel
  G114.1: Spindle synchronization I
  G114.2: Tool spindle synchronization IA
  G114.3: Tool spindle synchronization II

- After the compensation amount is temporarily canceled, the compensation amount will return for each movement command axis. Both tool length compensation and wear compensation at this movement depend on the MTB specifications (parameter "#1101 Tabsmv").
  G commands with temporary cancellation: G28, G30, G53
- If G53 command is issued in the same block as the T command, the compensation amount for the axis with no movement commanded will employ the amount in the previous block.

### #1100 = "0" (Compensates when the T command is executed.)

When the T command is executed, the compensation operation method depends on the MTB specifications (parameter "#1296 ext32/bit4").

Tool length compensation amount: 7.000 mm  Wear compensation amount: 0.500 mm

| | "#1296 ext32/bit4" = 0 | | "#1296 ext32/bit4" = 1 | |
|---|---|---|---|---|
| | **Machine position** | **Program position** | **Machine position** | **Program position** |
| G28 X. ;<br>G00 T116 ;<br>G00 X100. :<br>: | 0.000<br>7.500<br>107.500 | 0.000<br>0.000<br>100.000 | 0.000<br>0.000<br>107.500 | 0.000<br>-7.500<br>100.000 |
| | The axis moves by the compensation amount. | | The compensation amount is applied to the program position with the axis unmoved. | |

(1) Do not issue T commands in the same block as the following command. If the command is issued, a program error (P33) will occur.
- Geometric command
- Corner chamfering/Corner R

(2) When you attempt to designate a T command in the same block as the movement command during coordinate rotation by program, do not issue an absolute command of only one axis for axes that compose a plane. If the command is issued, a program error (P33) will occur.

The machining program path varies depending on the compensation operation method.

| Machining program | "#1296 ext32/bit4" = 0 (OFF) | "#1296 ext32/bit4" = 1 (ON) |
|---|---|---|
| N1 T0101 ;<br>N2 X100. Z200. ; | 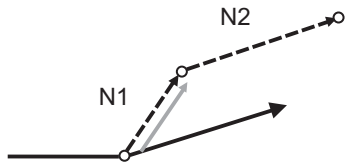 | 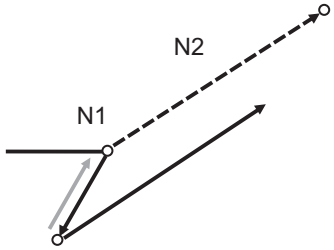 |
| N1 T0101 ;<br>N2 W200. ; | 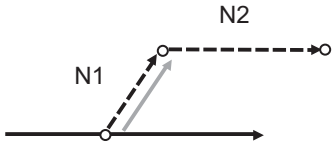 | 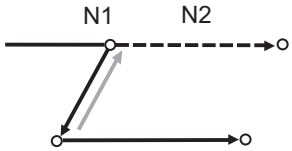 |
| | When the incremental command is issued after the T command, the machining program path and the machine position after the incremental command become different. | |

Machining program path

Compensated path

Compensation amount

## 12.1.3 Allocation of Tool Compensation Sets to Part Systems

### Function and purpose

The number of tool offset sets can be set per part system.
This function is divided into the following methods and which one is used depends on the MTB specifications (parameters "#1438 Ofs-SysAssign", "#12054 Tol-Ofsnum").

Arbitrary allocation: Arbitrarily allocates to each part system.
Fixed allocation: Automatically and evenly allocates to each part system.

The arbitrary allocation enables the efficient allocation because when a certain part system needs only a small number of offset sets, the rest can be allocated to another part system. If an auxiliary-axis part system does not need the tool offset set at all, the number of tool offset sets can be set to "0" for the auxiliary-axis part system.
While this function is available if the specification allows allocation by tool compensation memory part system, this parameter depends on the MTB specification parameter "#1051 MemTol"). Subsequent description is an example in the case where the number of tool offset sets in the system is 999. Number of tool offset sets in system is the total number of tool offset sets of all part systems.

(1) Arbitrary allocation (with #1438=1)

The number of tool offset sets allocated to each part system depends on the MTB specifications (parameter "#12054 Tol-ofsnum").

(a) When the number of tool offset sets is increased for the 1st part system of 4-part system

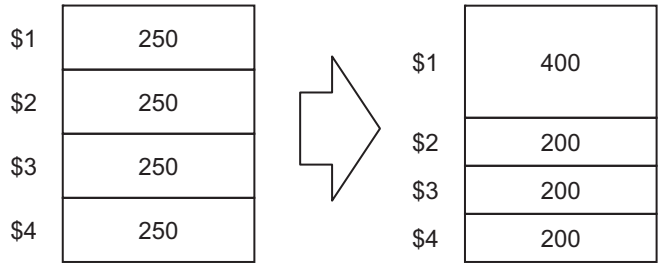


(b) When the number of offset sets is set to "0 sets" for the 3rd part system to use the 3rd part system as auxiliary-axis part system

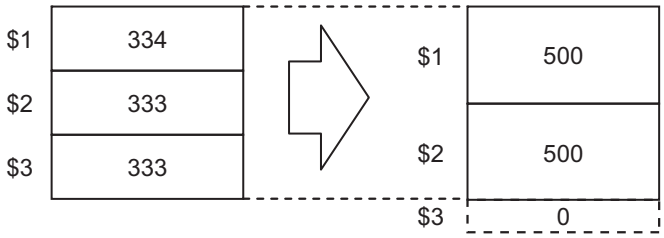


(2) Fixed allocation (with #1438=0)

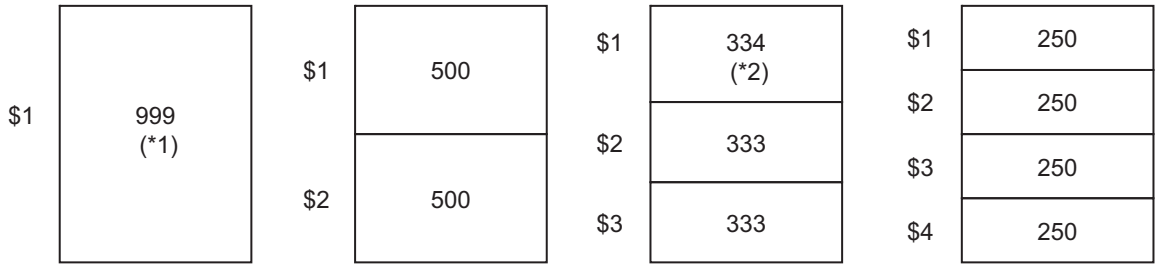


(*1) The maximum number of tool offset sets per part system is 999.

(*2) If there is any remainder, the remainder sets are allocated to the 1st part system.

### Precautions

(1) The maximum number of tool offset sets for 1-part system is 999.

(2) For 1-part system, up to the number of tool offset sets in the system is available regardless of the parameter setting.

(3) When the value of the parameter "#12054 Tol-Ofsnum" (the number of tool offset sets by arbitrary allocation) is equal to or below the number of tool offset sets in the system, the remainder is not allocated to any part system even if the specification allows arbitrary allocation.

(4) When the tool compensation memory is provided commonly for the part systems ("#1051 MemTol"=1), the number of tool offset sets in the system are commonly used by all part systems regardless of the parameter setting. The setting of parameter #1051 depends on the MTB specifications, so check it in your machine specifications.

(5) Even if the specification allows arbitrary allocation, fixed allocation is applied if the parameter is "#12054 Tol-Ofsnum"= 0.

(6) When entering offset data, if the number of offset data exceeds that of current tool offset sets, the excess offset data cannot be entered.

## 12.1.4 Tool Compensation for Additional Axes

### Function and purpose

The tool compensation for the lathe is valid for the first axis (basic X axis) and the second axis (basic Z axis).
If the third axis and following axes are added, the tool compensation is also valid for the additional axes.
The additional axes to which tool compensation is executed are determined according to the settings of the following two parameters.
For details, refer to the specifications of your machine tool.

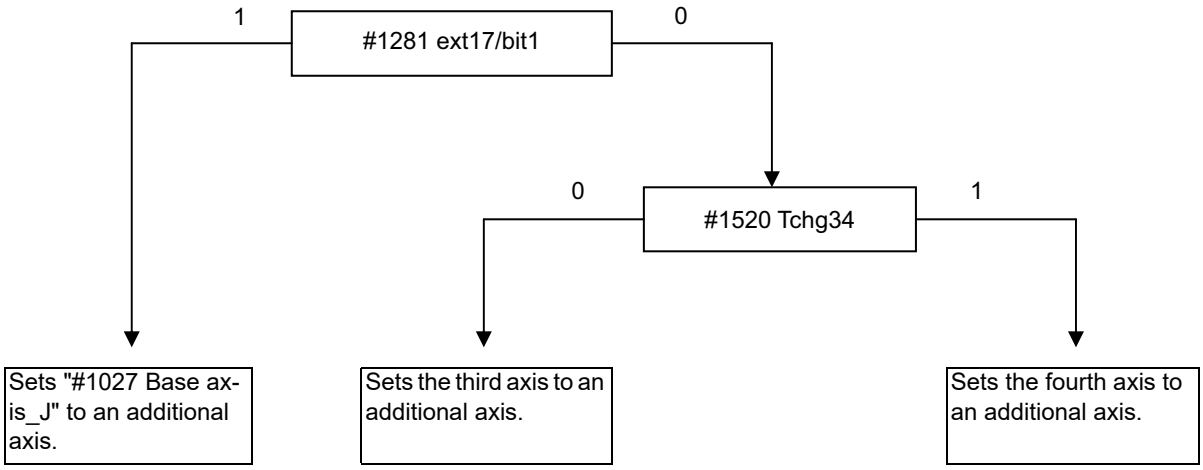


(1) Selection method of target axis of tool compensation for additional axes "#1281 ext17/bit1"

You can specify whether the axis selected by parameter "#1520 Tchg34" or the axis set by parameter "#1027 Base axis_J"is selected as the target axis of tool compensation for additional axes.
When this parameter is set effective, tool compensation for additional axes is applied to the axis set to "#1027 Base axis_J".
(When the axis configuration is XZCBY, if it is needed to apply tool compensation to the Y axis, set "Y" to "#1027 Base axis_J".)

(2) Selection of tool compensation operation for additional axes "#1520 Tchg34"

Target axis of tool compensation for additional axes can be switched between the third axis and fourth axis.
(When the axis configuration is XZCY, if it is needed to apply tool compensation to the Y axis, set "1" to this parameter.)
Note that tool compensation is applied to the third axis when the fourth axis does not exist even if "1" is set to this parameter.

## Detailed description

### When axis exchange is made under the mixed control (cross axis control) or arbitrary axis exchange control

(1) When part system 1 and part system 2 have same axis configuration and axis names

$1 "#1026 Base axis_I"= X, "#1027 Base axis_J"= Y, "#1028 Base axis_Z"= Z
$2 "#1026 Base axis_I"= X, "#1027 Base axis_J"= Y, "#1028 Base axis_Z"= Z

| Axis configuration | Selection method of additional axes | Operation |
|---|---|---|
| 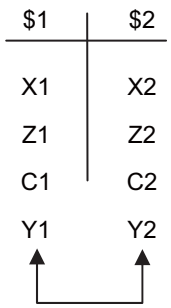 | "#1027 Base axis_J" (#1281 ext17/bit1=1) | The axis, to which tool compensation for additional axes is applied after the axis exchange under the mixed control (cross axis control) or arbitrary axis exchange control, is the axis set to "#1027 Base axis_J" of the crossed part system. |
| | "#1520 Tchg34" | When "#1520 Tchg34" is [0]:<br>Tool compensation for additional axes is applied to the axis that is set as the third axis in the axis configuration after the axis exchange.<br>When "#1520 Tchg34" is [1]:<br>Tool compensation for additional axes is applied to the axis that is set as the fourth axis in the axis configuration after the axis exchange. |

(2) When part system 1 and part system 2 differ in axis configuration and axis name (differ by one axis)

$1 "#1026 Base axis_I"= X, "#1027 Base axis_J"= Y, "#1028 Base axis_Z"= Z
$2 "#1026 Base axis_I"= X, "#1027 Base axis_J"= Y, "#1028 Base axis_Z"= Z

| Axis configuration | Selection method of additional axes | Operation |
|---|---|---|
| 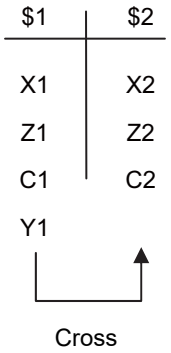 | "#1027 Basic axis_J" (#1281 ext17/bit1=1) | The axis, to which tool compensation for additional axes is applied after the axis exchange under the mixed control (cross axis control) or arbitrary axis exchange control, is the axis set to "#1027 Base axis_J" of the crossed part system. (An axis that does not exist in the part system can be set to "#1027 Base axis_J".) |
| | "#1520 Tchg34" | When "#1520 Tchg34" is [0]:<br>Tool compensation for additional axes is applied to the axis that is set as the third axis in the axis configuration after the axis exchange.<br>When "#1520 Tchg34" is [1]:<br>Tool compensation for additional axes is applied to the axis that is set as the fourth axis in the axis configuration after the axis exchange. |

(3) When part system 1 and part system 2 differ in axis configuration and axis name (differ by two axes)

$1 "#1026 Base axis_I"= X, "#1027 Base axis_J"= Y, "#1028 Base axis_Z"= Z
$2 "#1026 Base axis_I"= X, "#1027 Base axis_J"= Y, "#1028 Base axis_Z"= Z

| Axis configuration | Selection method of additional axes | Operation |
|---|---|---|
| 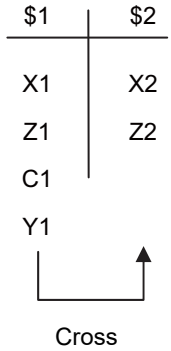 | "#1027 Base axis_J" (#1281 ext17/bit1=1) | The axis, to which tool compensation for additional axes is applied after the axis exchange under the mixed control (cross axis control) or arbitrary axis exchange control, is the axis set to "#1027 Base axis_J" of the crossed part system. (An axis that does not exist in the part system can be set to "#1027 Base axis_J".) |
| | "#1520 Tchg34" | When "#1520 Tchg34" is [0]:<br>Tool compensation for additional axes is applied to the axis that is set as the third axis in the axis configuration after the axis exchange.<br>When "#1520 Tchg34" is [1]:<br>Tool compensation for additional axes is not applied if the fourth axis does not exist after axis exchange. |

While part system 2 has 2-axis configuration, tool compensation amount for additional axes can be set to it.

## 12.1.5 Tool Compensation for 2nd Additional Axis

### Function and purpose

In addition to the tool compensation for additional axes, tool compensation can be enabled for another axis. The axis to which tool compensation for the 2nd additional axis is to be applied is determined according to the settings of the following two parameters.

"#12103 2nd add T-ofs ON" (Tool compensation for the 2nd additional axis is enabled.)
When the parameter "#12103" is set to "1", the tool compensation amount of the 2nd additional axis is displayed, and tool compensation is enabled.

"#12104 2nd add T-ofs set" (Tool compensation setting for 2nd additional axis)
Tool compensation for the 2nd additional axis is applied to the axis specified in the parameter "#12103".
When "C" is set for the parameter "#12103", tool compensation for the 2nd additional axis is applied to the C1 axis as shown below.
However, if the specified axis name is not found in the parameter "#1013 axname" of the same part system, tool compensation is disabled.

When the parameters in the 1st part system ($1) are set as follows:

```
#12103 = 1
#12104 = C
```

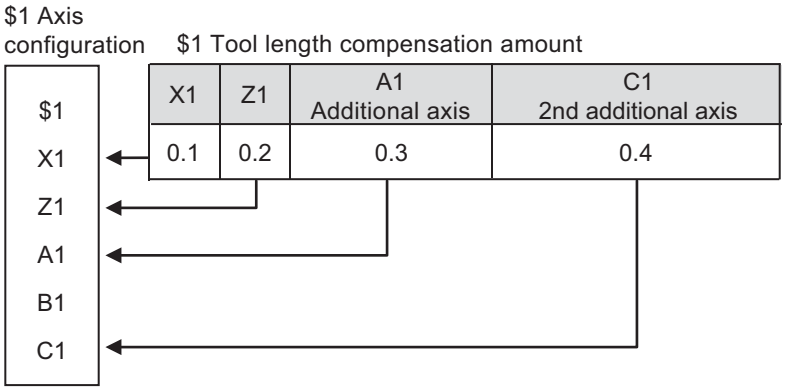


### Note

(1) If the parameter "#12103" is not set, tool compensation for the 2nd additional axis is applied to the 4th axis (B1 axis in the figure above) included in the part system. However, when the part system consists of only three axes, tool compensation for the 2nd additional axis is disabled.

As shown below, if the parameter "#12103" is set for the 1st axis, 2nd axis, or the axis for tool compensation for additional axes, tool compensation for the 2nd additional axis is disabled. (The tool compensation amount of the 1st axis, 2nd axis, or the axis for tool compensation for additional axes takes priority.)

When the parameters in the 1st part system ($1) are set as follows:

```
#12103 = 1
#12104 = A
```

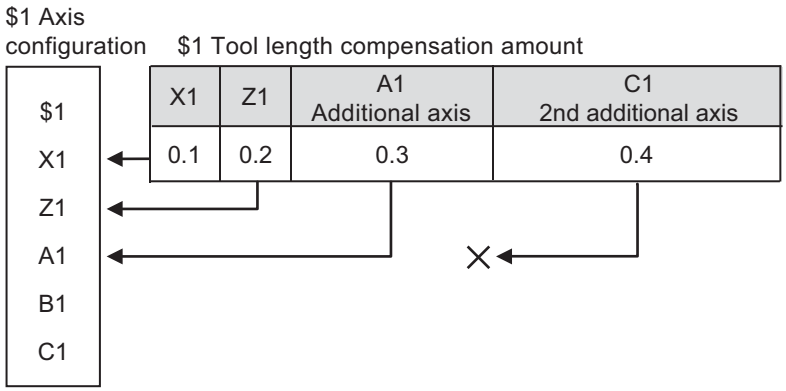


## Detailed description

### Axis exchange operation

(1) The tool compensation amount of the part system that executes the T command is applied to tool compensation. Even when axis exchange is carried out, the axis moves while the tool compensation amount remains kept. The following example shows a case in which tool compensation is carried out after axis exchange has been completed. The B1 axis runs using the tool compensation amount of the destination part system $2.

When both the parameters of the 1st part system ($1) and the 2nd part system ($2) are set as shown below:

```
#12103 = 1
#12104 = B
```

| Operation | Axis configuration |
|---|---|
| | $1: X1, Z1, A1, [B1]<br>$2: X2, Z2, A2, [B2] |
| Axis exchange | ⇩ |
| Tool compensation execution | $1: X1, Z1, A1, [B2]<br>$2: X2, Z2, A2, [B1] |

$1 Tool length compensation amount

| X1 | Z1 | A1<br>Additional axis | B1<br>2nd additional axis |
|---|---|---|---|
| 0.1 | 0.2 | 0.3 | 0.4 |

$2 Tool length compensation amount

| X2 | Z2 | A2<br>Additional axis | B2<br>2nd additional axis |
|---|---|---|---|
| 0.6 | 0.7 | 0.8 | 0.9 |

Tool compensation for B1 axis was carried out after axis exchange; therefore, the tool compensation amount for the 2nd additional axis of the $2, "0.9", is applied after it has moved to $2.

(2) As shown below, if axis exchange is carried out after tool compensation has been completed, the axis moves while the tool compensation amount remains kept.

When both the parameters of the 1st part system ($1) and the 2nd part system ($2) are set as shown below:

```
#12103 = 1
#12104 = B
```

| Operation | Axis configuration |
|---|---|
| Tool compensation execution | $1: X1, Z1, A1, B1<br>$2: X2, Z2, A2, B2 |
| Axis exchange | ⇩ |
| | $1: X1, Z1, A1, B2<br>$2: X2, Z2, A2, B1 |

$1 Tool length compensation amount

| X1 | Z1 | A1<br>Additional axis | B1<br>2nd additional axis |
|---|---|---|---|
| 0.1 | 0.2 | 0.3 | 0.4 |

$2 Tool length compensation amount

| X2 | Z2 | A2<br>Additional axis | B2<br>2nd additional axis |
|---|---|---|---|
| 0.6 | 0.7 | 0.8 | 0.9 |

Axis exchange of B1 axis was carried out after tool compensation; therefore, the tool compensation amount for the 2nd additional axis of the $1, "0.4", is also applied after it has moved to $2.

(3) As shown below, an axis that is not specified in the parameter "#1013 axname" of the same part system can also be set. When the axis specified by axis exchange used, tool compensation can be applied to the axis.

When both the parameters of the 1st part system ($1) and the 2nd part system ($2) are set as shown below:

| $1 parameter | $2 parameter |
|---|---|
| #12103 = 1<br>#12104 = B | #12103 = 1<br>#12104 = C |

| Operation | Axis configuration |
|---|---|
| | $1: X1, Z1, A1, B1, C1<br>$2: X2, Z2, A2 |
| Axis exchange | ⇩ |
| Tool compensation execution | $1: X1, Z1, A1, B1<br>$2: X2, Z2, A2, C1 |

$1 Tool length compensation amount

| X1 | Z1 | A1<br>Additional axis | B1<br>2nd additional axis |
|---|---|---|---|
| 0.1 | 0.2 | 0.3 | 0.4 |

$2 Tool length compensation amount

| X2 | Z2 | A2<br>Additional axis | C<br>2nd additional axis |
|---|---|---|---|
| 0.6 | 0.7 | 0.8 | 0.9 |

C1 axis moved to $2 by axis exchange; therefore, the tool compensation amount for the 2nd additional axis of the $2, "0.9", is applied when tool compensation is carried out.

# 12.2 Tool Length Compensation

## Detailed description

### Tool length compensation amount setting

This function compensates the tool length with respect to the programmed basic position. This position may generally be set to either the center position of the turret or the tool nose position of the basic tool.

(1) Center position of turret

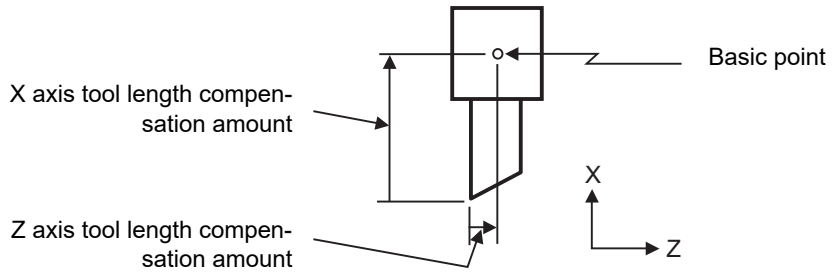


(2) Tool nose position of basic tool

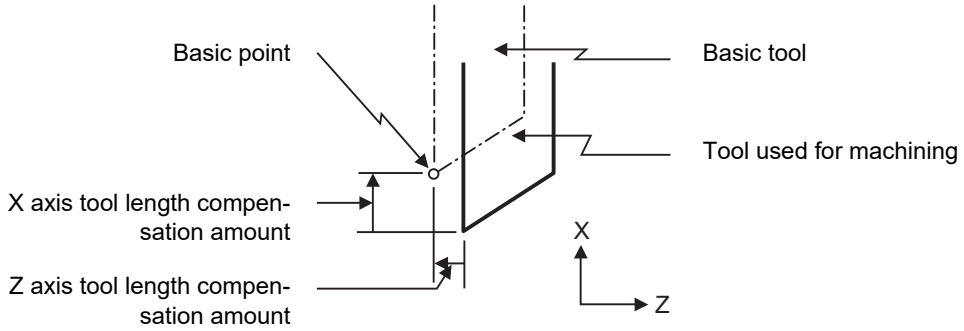


### Tool length compensation No. change

When tool Nos. are changed, the tool length compensation corresponding to the new tool Nos. are added to the movement amounts in the machining program.

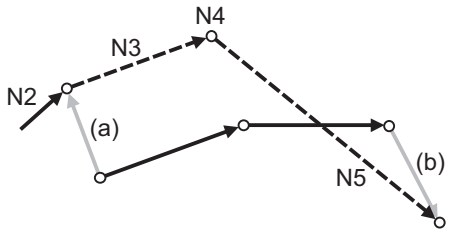


```
N1 T0100 ;
N2 G01 X10.0 Z10.0 F100 ;
N3 G01 X13.0 Z15.0 F20.0 ;
N4 T0200 ;
N5 G01 X13.0 Z20.0 F25.0 ;
```

- Programmed machining path
- Compensated tool path
- (a) Compensation amount (old)
- (b) Compensation amount (new)

In this example, the tool length is compensated with the tool No. and compensation is performed in the block with the movement command.

### Tool length compensation cancel

(1) When compensation No. 0 is ordered

Tool length compensation is canceled when the tool length compensation No. 0 is assigned in the T command.

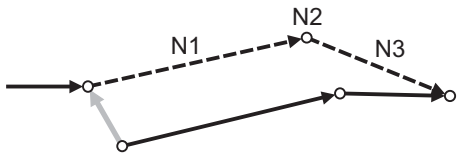


N1 X10.0 Z10.0 F10 ;
N2 T0000 ;
N3 G01 X10.0 Z20.0 ;

This applies when compensation operation is executed in a block with the move command.

- Programmed machining path
- Compensated tool path
- Compensation amount

(2) When ordered compensation amount is 0

Tool length compensation is canceled when the tool length compensation No. with compensation amount 0 is assigned in the T command.

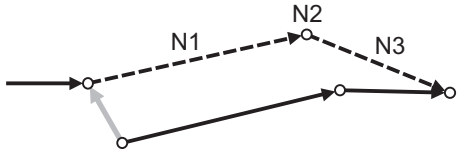


N1 G01 X10.0 Z10.0 F10 ;
N2 T0100 ;
N3 G01 X10.0 Z20.0 ;

This applies when compensation operation is executed in a block with the move command.

- Programmed machining path
- Compensated tool path
- Compensation amount

### Precautions

(1) When G28, G29 or G30 is commanded, the compensation is temporarily canceled. Therefore, the machine moves to the position where the compensation was canceled and the compensation amount is stored in the memory. This means that with the next movement command the machine will move to the compensation position.

(2) When G28, G29 or G30 and the compensation cancel are commanded in the same block, the machine is moved to the position where the compensation was canceled, however the compensation amount remains stored in the memory. This means that the display coordinate may be displayed including the compensation amount. Issue these command in the separate block so that the compensation amount should not be stored in the memory.

(3) Even if the compensation amount of the compensation No. currently selected by MDI is changed during automatic operation, the changed compensation amount will not be valid unless a T command with the same No. is executed again.

(4) The tool length compensation and tool nose wear compensation amounts are cleared by resetting and by emergency stop. These data can be held depending on the MTB specifications (parameter "#1099 Treset").

# 12.3 Tool Nose Wear Compensation

## Detailed description

### Tool nose wear compensation amount setting

The wear sustained by the tool being used can be compensated.

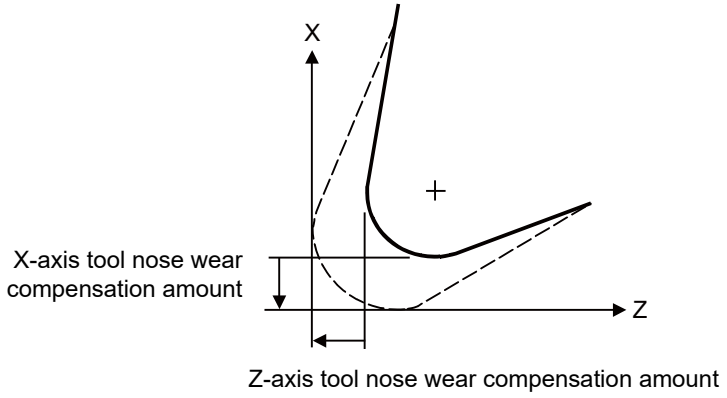


### Tool nose wear compensation cancel

Tool nose wear compensation is canceled when compensation No. 0 is assigned

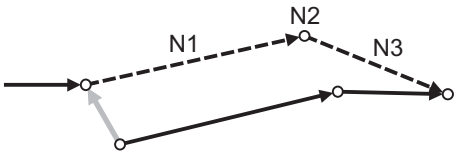


```
N1 G01 X10.0 Z10.0 F10 ;
N2 T0100 ;
N3 G01 X10.0 Z20.0 ;
```

This applies when compensation operation is executed in a block with the move command.

- Programmed machining path
- Compensated tool path
- Compensation amount

## Precautions

(1) When G28, G29 or G30 is commanded, the compensation is temporarily canceled. Therefore, the machine moves to the position where the compensation was canceled and the compensation amount is stored in the memory. This means that with the next movement command the machine will move to the compensation position.

(2) When G28, G29 or G30 and the compensation cancel are commanded in the same block, the machine is moved to the position where the compensation was canceled, however the compensation amount remains stored in the memory. Issue these command in the separate block so that the compensation amount should not be stored in the memory.

(3) Even if the compensation amount of the compensation No. currently selected by MDI is changed during automatic operation, the changed compensation amount will not be valid unless a T command with the same No. is executed again.

(4) The tool length compensation and tool nose wear compensation amounts are cleared by resetting and by emergency stop. These data can be held depending on the MTB specifications (parameter "#1099 Treset").

# 12.4 Tool Nose Radius Compensation; G40, G41, G42, G46

## Function and purpose

Because a tool nose is generally rounded, a hypothetical tool nose point is used for programming. Due to this roundness of the tool nose, there will be a gap between the programmed shape and the actual cutting shape during taper cutting or circular cutting. Tool nose radius compensation (nose R compensation) is a function for automatically calculating and offsetting this error by setting the tool nose radius (cutter radius) value.
These command codes enable to choose the offset direction to be fixed or automatically identified.

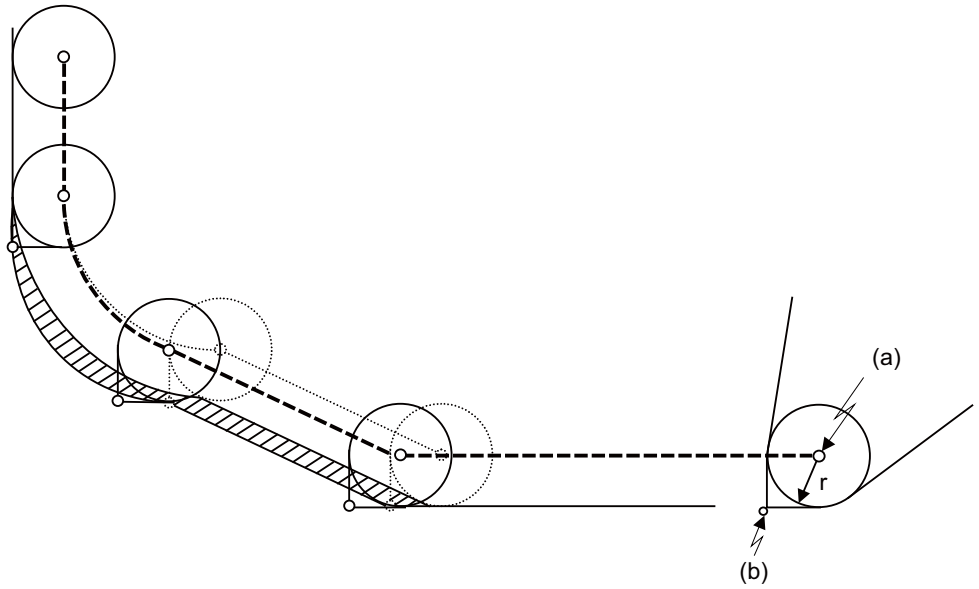


(a) Tool nose center
(b) Hypothetical tool nose point
(r) Tool nose radius

..... Path of tool nose center without nose R compensation (Shaded part indicates the cutting shape gap)

---- Path of tool nose center with nose R compensation

## Command format

| | |
|---|---|
| G40(X/U__ Z/W__ I__ K__) ; | **Tool nose radius compensation cancel** |

| | |
|---|---|
| G41(X/U__ Z/W__ I__ K__) ; | **Tool nose radius compensation left** |

| | |
|---|---|
| G42(X/U__ Z/W__ I__ K__); | **Tool nose radius compensation right** |

| | |
|---|---|
| G46(X/U__ Z/W__ ) ; | **Tool nose radius compensation (automatic direction identification) ON** |

| | |
|---|---|
| X/U | X axis end point coordinate (X is the absolute position of workpiece coordinate system, U is the incremental position from current position) |
| Z/W | Z axis end point coordinate (Z is the absolute position of workpiece coordinate system, W is the incremental position from current position) |
| I, J, K | Refer to "When I, J, K are commanded in G40" or "12.4.4 G41/G42 Commands and I, J, K Designation". |

## Detailed description

(1) G41 works on condition that the tool is located on the left of the workpiece to the direction of motion.
G42 works on condition that the tool is located on the right of the workpiece to the direction of motion.
G46 automatically identifies the compensation direction by the preset hypothetical tool nose point and movement commands in the machining program.
G40 cancels the tool nose radius compensation mode.

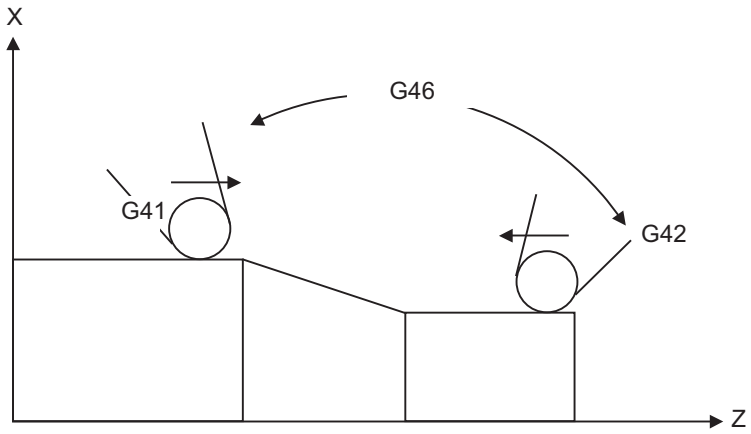


(2) Nose R compensation pre-reads the data in the following two movement command blocks (up to 5 blocks when there is no movement command) and controls the tool nose R center path by the intersection point calculation method so that it is offset from the programmed path by an amount equivalent to the tool nose radius.
In the figure below, "r" is the nose R compensation amount (radius of tool nose).
The nose R compensation amount corresponds to the tool length No. and should be preset along with the tool nose point.

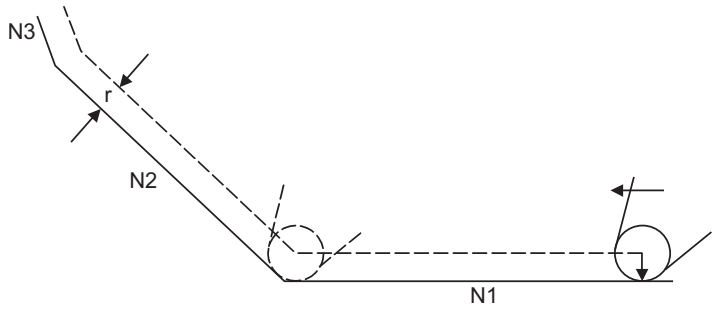


(3) If there are 4 or more blocks without movement amounts among 5 continuous blocks, overcutting or undercutting will occur.
Blocks in which optional block skip is valid are ignored.

(4) Tool nose radius compensation is valid also for fixed cycles.
However, in the rough cutting cycles (G70, G71, G72, G73) of lathe system, cutting will be done with the compensation mode canceled since the finished shape already includes the compensation amount and, upon completion of the cutting, operation will automatically return to the compensation mode.

(5) Compensation mode will be temporarily canceled in 1 block before the thread cutting command block.

(6) A nose R compensation (G41 or G42) command can be issued during nose R compensation (G46). For this, compensation mode does not need to be canceled with G40.

(7) The compensation plane, movement axes and next advance direction vector follow the plane selection command designated by G17, G18 or G19.

| | |
|---|---|
| G17 | X-Y plane X,Y,I,J |
| G18 | Z-X plane Z,X,K,I |
| G19 | Y-Z plane Y,Z,J,K |

## 12.4.1 Tool Nose Point and Compensation Direction

### Detailed description

#### Tool nose point

Because a tool nose is generally rounded, the programmed tool nose position is adjusted to a point "P" shown in the examples figures below.
For nose R compensation, select one of the points in the figures below for each tool length numbers and preset the positional relationship.
(Selects "1" to "8" in the G46 mode and "0" to "9" in the G41/G42 mode.)

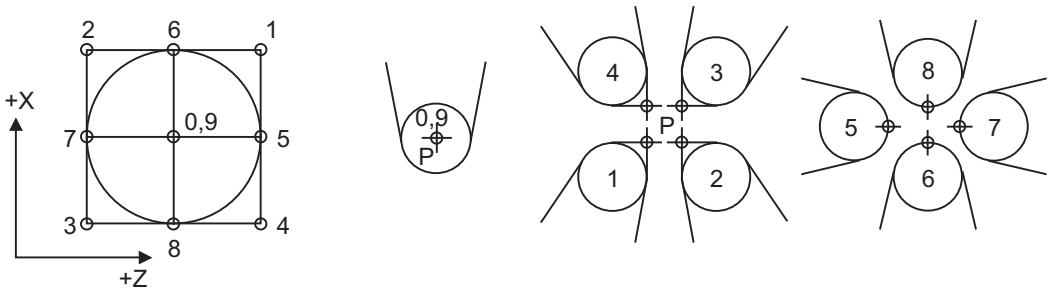


#### Tool nose point and compensation operation

(1) When the tool nose center is adjusted to the machining start position (Tool nose point "0" or "9")

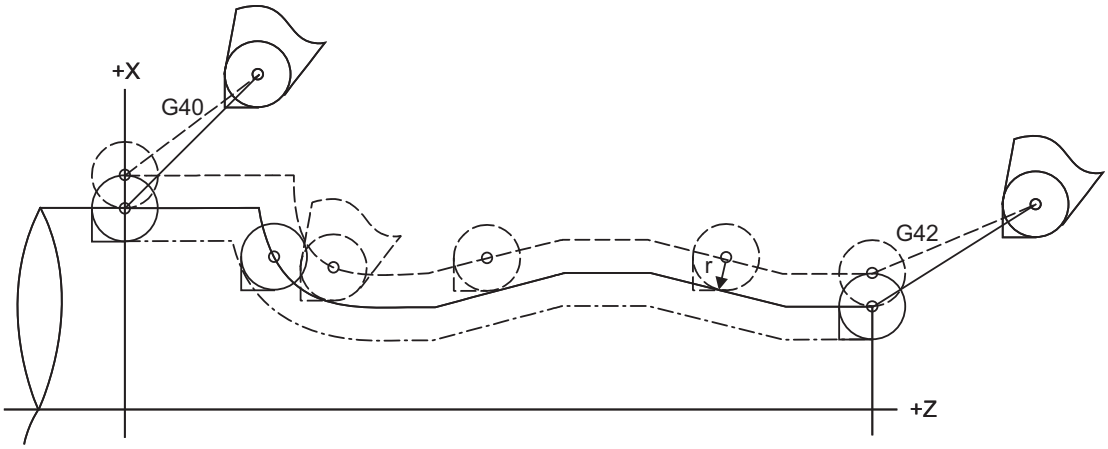


——— Programmed path or machining shape with tool nose radius compensation

– – – – – – Path of tool nose center with nose R compensation

—·—·—·— Machining shape with no nose R compensation

(2) When the tool nose point is adjusted to the machining start position (Tool nose point "3")

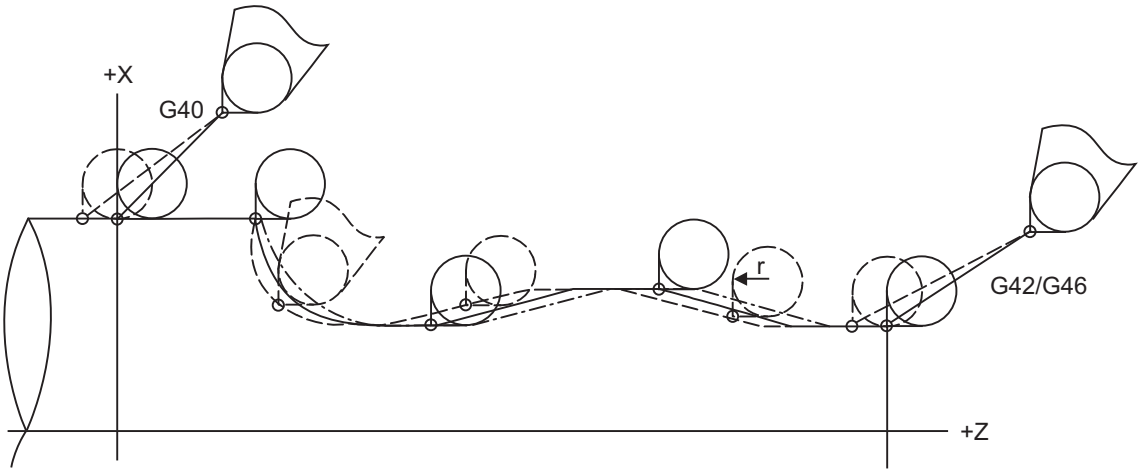


Programmed path or machining shape with tool nose radius compensation

Path of tool nose center with nose R compensation

Machining shape with no nose R compensation

## Compensation direction of G46

The compensation directions of the G41/G42 commands is determined by the G41/G42 codes, while that of the G46 command is automatically determined in accordance with the following table from the relationship between the tool nose points and the commanded movement vectors.

(1) If the initial movement vector (including G00) corresponds to a "×" mark in the table when starting the nose R compensation, the compensation direction cannot be specified. It will be determined by the next movement vector. When the direction cannot be determined even after reading 5 blocks ahead, program error (P156) will occur.

(2) When the compensation direction is reversed during tool nose radius compensation, program error (P157) will occur except when it is commanded in G00 block. Even if directions differ between before and after the G28, G30 or G53 blocks, an error will not occur because compensation will be temporarily canceled. Using a parameter (#8106 G46 NO REV-ERR), the same compensation direction can be maintained.

(3) When the compensation direction during tool nose radius compensation corresponds to a "×" in the table below, the previous direction will be resumed.

**[How to determine the compensation direction by the movement vectors and tool nose point in command G46]**

| Direction of tool nose advance | Compensation direction of tool nose | | | | | | | | Direction of tool nose advance |
|---|---|---|---|---|---|---|---|---|---|
| | Tool nose point | | | | | | | | |
| Movement vector (Tool nose point 1 to 4) | 1 | 2 | 3 | 4 | 5 | 6 | 7 | 8 | Movement vector (Tool nose point 5 to 8) |
| ⇕ | Right | Right | Left | Left | × | Right | × | Left | → |
| ↗ | × | Right | × | Left | Left | Right | Right | Left | ↑ |
| ⇕ | Left | Right | Right | Left | Left | × | Right | × | ↑ |
| ↖ | Left | × | Right | × | Left | Left | Right | Right | ← |
| ⇕ | Left | Left | Right | Right | × | Left | × | Right | ← |
| ↙ | × | Left | × | Right | Right | Left | Left | Right | ↓ |
| ⇕ | Right | Left | Left | Right | Right | × | Left | × | ↓ |
| ↘ | Right | × | Left | × | Right | Right | Left | Left | → |

## Note

(1) "×" marks in the table indicate that the compensation direction cannot be determined by the movement vector (tool nose points).

(2) " ↗ " mark in the table denotes a movement vector in the 45° direction. (The other movement vectors are based on this.)

(3) " ⇕ " mark in the table denotes a movement vector with a range larger than 45° and smaller than 135°. (The other movement vectors are based on this.)

(Example) When tool nose point 3, movement vector in the Z axis (-) direction (when movement vector is as the arrow in the figure below)

| | |
|---|---|
| 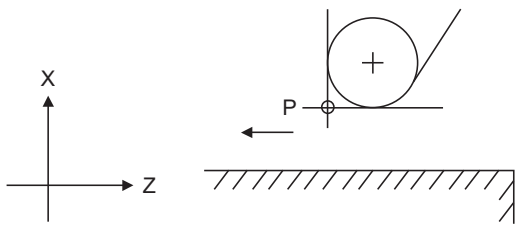 | As shown in the figure on the left, the workpiece is on the X axis (-) side from the tool nose position and tool movement direction.<br>Consequently, the compensation direction will be on the right side of the workpiece to the direction of tool nose advance. |

## 12.4.2 Nose R Compensation Operations

### Detailed description

**Nose R compensation cancel mode**

The nose R compensation cancel mode is established by any of the following conditions.

(1) After the power has been switched on
(2) After the reset button on the setting and display unit has been pressed
(3) After the M02 or M30 command with reset function has been executed
(4) After the compensation cancel command (G40) is issued
(5) After tool No. 0 has been selected (T00 has been executed)

The offset vectors are zero in the compensation cancel mode, and the tool nose point path coincides with the programmed path.
Programs including nose R compensation must be terminated in the compensation cancel mode.

**Nose R compensation start (start-up)**

Nose R compensation starts when all the following conditions are satisfied in the compensation cancel mode.

(1) The movement command is issued after G41, G42 or G46.
(2) The movement command is not a circular command.

Before starting a compensation, 2 to 5 blocks are pre-read for the intersection point calculation regardless of single block operation or continuous operation. (Two blocks are pre-read if there is a movement command, up to 5 blocks are pre-read if not) )
Similarly, during compensation mode, up to 5 blocks are pre-read for compensation calculation.

**[Control state diagram]**

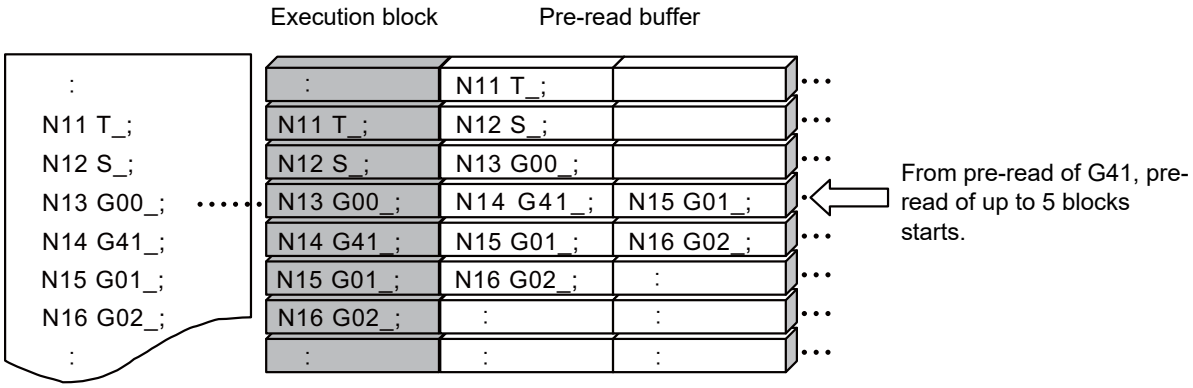


There are two ways of starting the compensation operation: type A and type B.
The type to be used is selected by setting of parameter "#8157 tool nose comp type B".
This type is used in common with the compensation cancel type.

| #8157 Nose R comp type B | Type | Description |
|---|---|---|
| 0 | Type A | When starting up/canceling a command block with nose R compensation and radius compensation, type A will not conduct intersection operation processing to the block and, instead, convert it to an offset vector which is vertical to the command vector. |
| 1 | Type B | When starting up/canceling a command block with nose R compensation and radius compensation, Type B will conduct intersection operation processing to the command block and the next block. |

## Start operation for nose R compensation

When starting nose R compensation, the tool will not move as much as the specified compensation amount by either G41, G42 or G46 command alone. Nose R compensation cannot be applied to the G00 command. It can be applied from G01, G02 or G03 command. Note that even if there is an axis command, the nose R compensation will not be applied unless there is movement.

(1) When G41, G42 or G46 is issued alone at an inside corner

```
:
N1 G42;
N2 G00 X_Z_;
N3 G01 X_Z_F_;
:
```

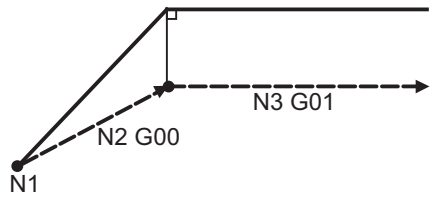


```
:
N1 G42;
N2 G01 X_Z_F_;
N3 G01 X_Z_;
:
```

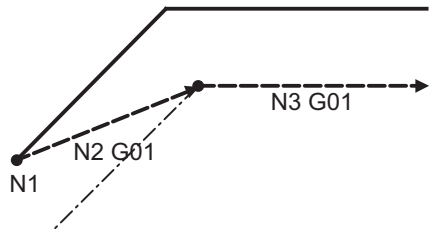


```
:
N1 G42;
N2 G01 X_Z_F_;
N3 G00 X_Z_;
N4 G01 X_Z_;
:
```

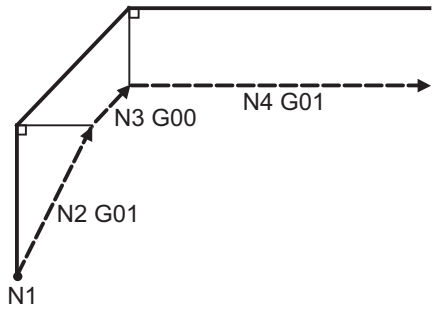


```
:
N1 G42;
N2 G00 X_Z_;
N3 G00 X_Z_;
N4 G01 X_Z_F_;
:
```

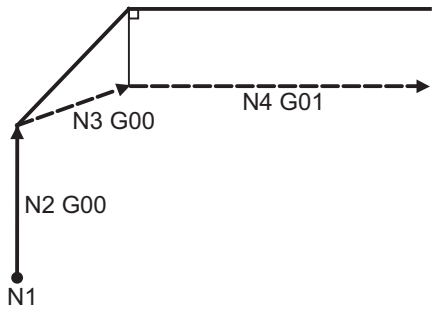


——— Program path  - - - - Path of tool nose center

(2) When G41, G42 or G46 is issued at an inside corner in the same block as a movement command

| Linear -> Linear | Linear -> Circular |
|---|---|
| 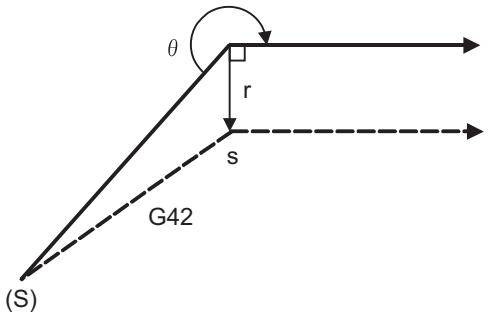  | 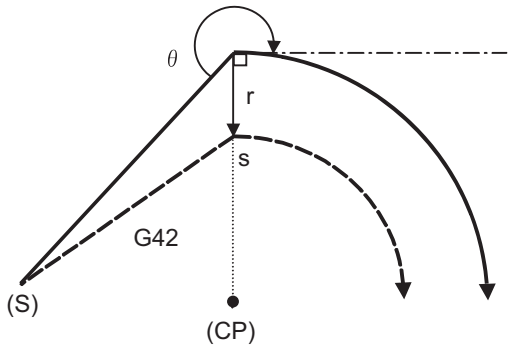  |

(S) Start point
r : Tool nose radius

(CP) Center of circular
s : Single block stop point

Program path

Path of tool nose center

(3) When G41, G42 or G46 is issued alone at an outside corner (obtuse angle)

| | Type A | Type B |
|---|---|---|
| :<br>N1 G41;<br>N2 G00 X_Z_;<br>N3 G01 X_Z_F_;<br>: | 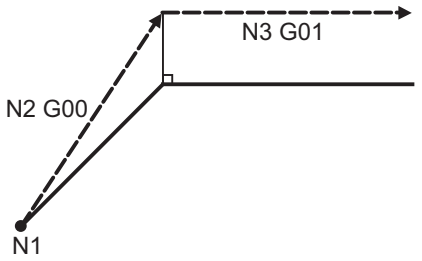 | 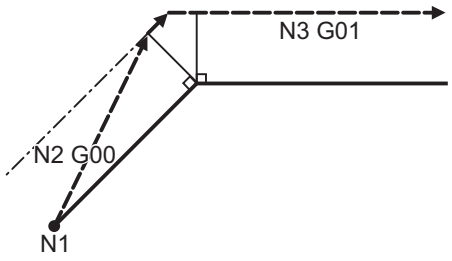 |
| :<br>N1 G41;<br>N2 G01 X_Z_F_;<br>N3 G01 X_Z_;<br>: | 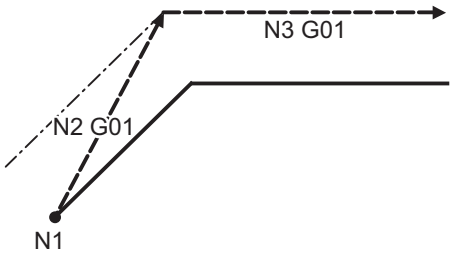 | |
| :<br>N1 G41;<br>N2 G01 X_Z_F_;<br>N3 G00 X_Z_;<br>N4 G01 X_Z_;<br>: | 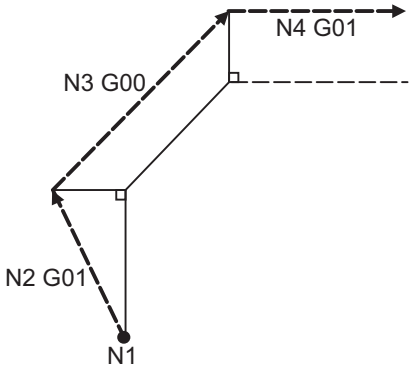 | 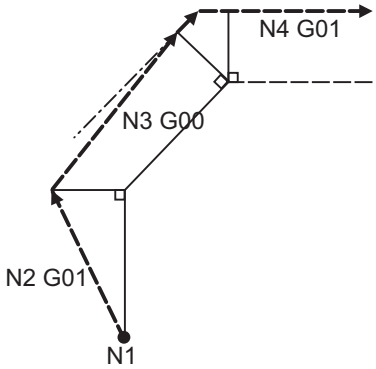 |
| :<br>N1 G41;<br>N2 G00 X_Z_;<br>N3 G00 X_Z_;<br>N4 G01 X_Z_F_;<br>: | 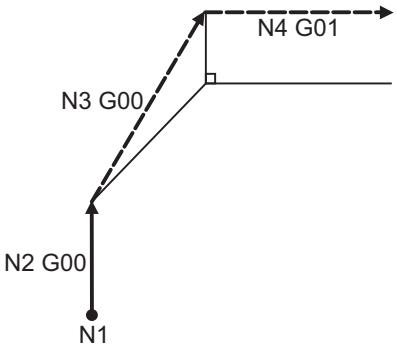 | 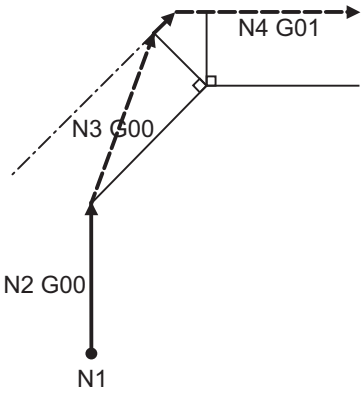 |

Program path　　Path of tool nose center

(4) When G41, G42 or G46 is issued at an outside corner (obtuse angle) in the same block as a movement command [90° <= θ < 180°]

| Linear -> Linear (Type A) | Linear -> Circular (Type A) |
|---|---|
| 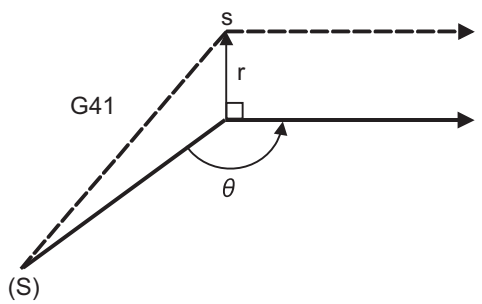  | 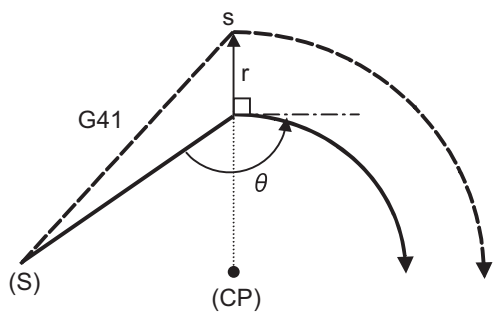  |
| **Linear -> Linear (Type B)** | **Linear -> Circular (Type B)** |
| 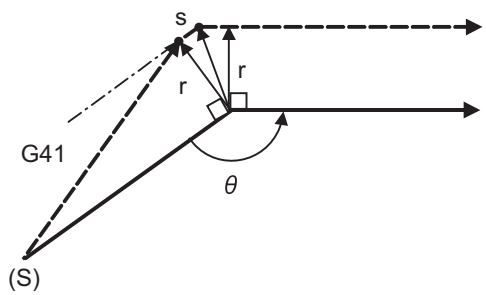  | 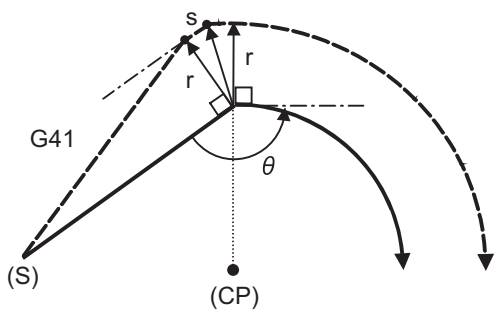  |

(S) Start point
(CP) Center of circular
r : Tool nose radius
s: Stop point with single block

——— Program path
- - - - Path of tool nose center

(5) When G41, G42 or G46 is issued alone at an outside corner (acute angle)

| | Type A | Type B |
|---|---|---|
| :<br>N1 G41;<br>N2 G00 X_Z_;<br>N3 G01 X_Z_F_;<br>: | 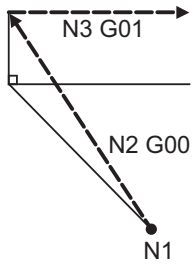 | 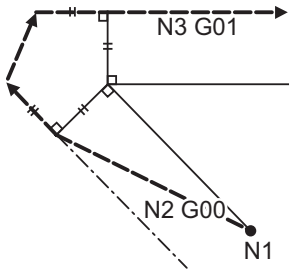 |
| :<br>N1 G41;<br>N2 G01 X_Z_F_;<br>N3 G01 X_Z_;<br>: | 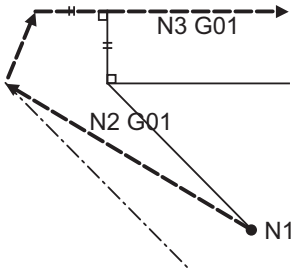 | |
| :<br>N1 G41;<br>N2 G01 X_Z_F_;<br>N3 G00 X_Z_;<br>N4 G01 X_Z_;<br>: | 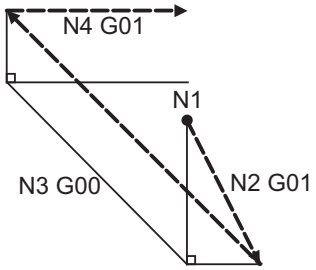 | 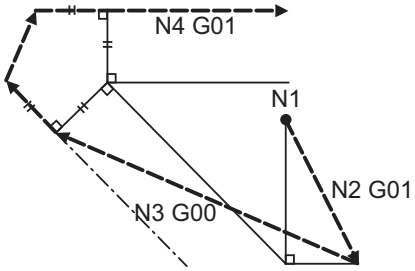 |
| :<br>N1 G41;<br>N2 G00 X_Z_;<br>N3 G00 X_Z_;<br>N4 G01 X_Z_ F_;<br>: | 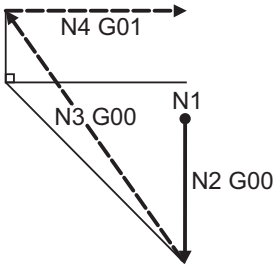 | 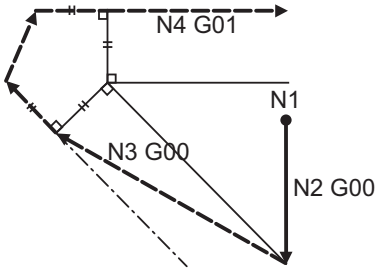 |

Program path  Path of tool nose center

(6) When G41, G42 or G46 is issued at an outside corner (acute angle) in the same block as a movement command [θ < 90°]

| Linear -> Linear (Type A) | Linear -> Circular (Type A) |
|---|---|
| 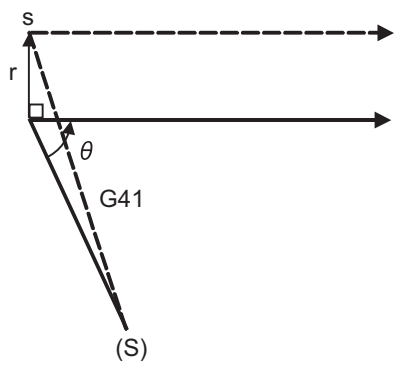  | 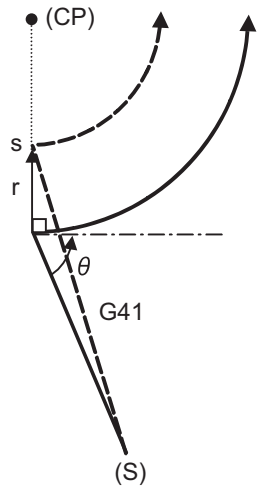  |
| **Linear -> Linear (Type B)** | **Linear -> Circular (Type B)** |
| 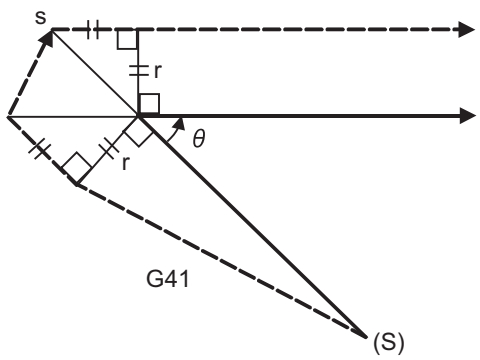  | 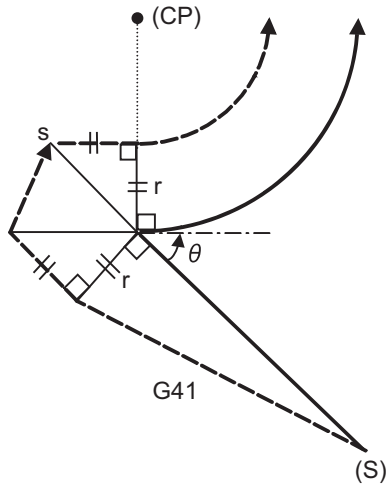  |

(S) Start point
(CP) Center of circular
r : Tool nose radius
s: Stop point with single block

Program path
Path of tool nose center

**Note**

(1) If there is no axis movement command in the same block as G41 or G42, compensation is performed perpendicularly to the next block's direction.

## Operation in compensation mode

Calculate the tool center path from the linear line/circular arc to perform compensation to the program path (G00, G01, G02, G03).

Even if the same compensation command (G41, G42, G46) is issued in a nose R compensation (G41, G42, G46) mode, the command will be ignored.

When 4 or more blocks without movement command are continuously specified in the compensation mode, overcutting or undercutting will occur.

When the M00 command is issued during nose R compensation, pre-reading will be prohibited.

(1) Machining an outside corner

| Linear -> Linear (90°<= θ < 180°) | Linear -> Linear (0° < θ < 90°) |
|---|---|
| 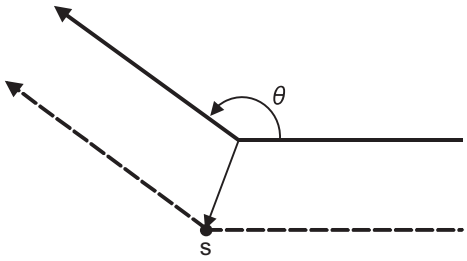 | 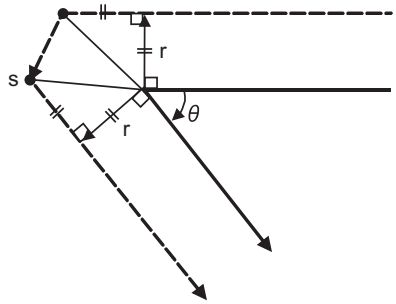 |
| **Linear -> Circular (90° <= θ < 180°)** | **Linear -> Circular (0° < θ < 90°)** |
| 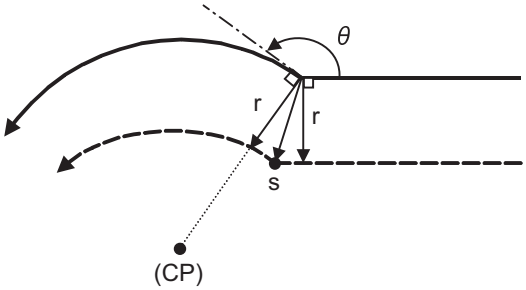 | 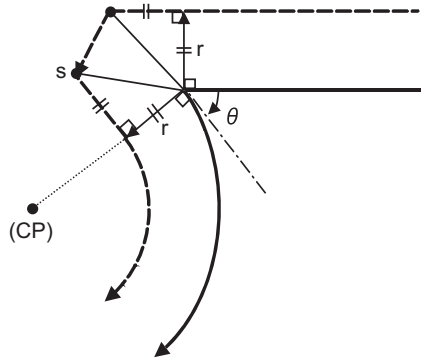 |
| **Circular -> Linear (90° <= θ < 180°)** | **Circular -> Linear (0° < θ < 90°)** |
| 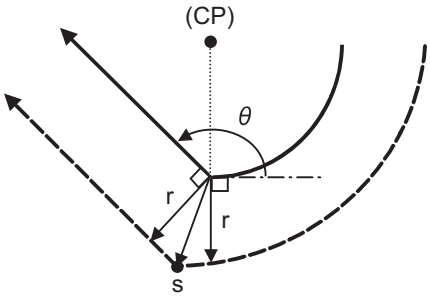 | 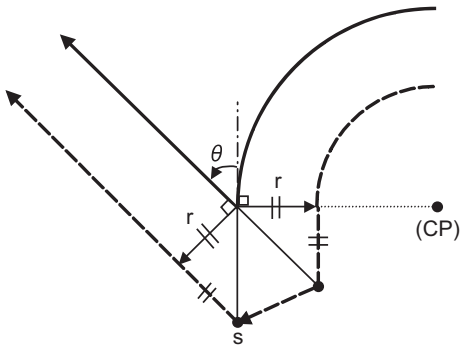 |
| **Circular -> Circular (90° <= θ < 180°)** | **Circular -> Circular (0° < θ < 90°)** |
| 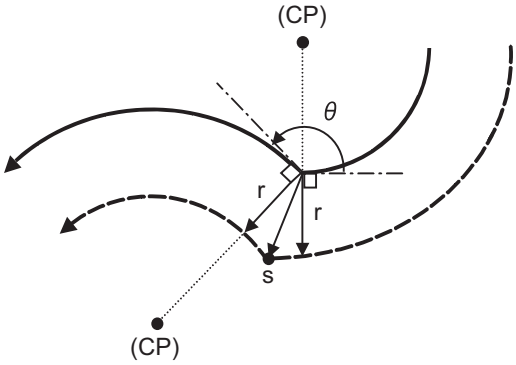 | 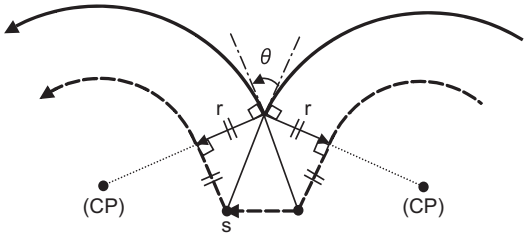 |

(CP) Center of circular

r : Tool nose radius

s : Single block stop point

——— Program path

- - - - Path of tool nose center

(2) Machining an inside corner

| Linear -> Linear (Obtuse angle) | Linear -> Linear (Acute angle) |
|---|---|
| 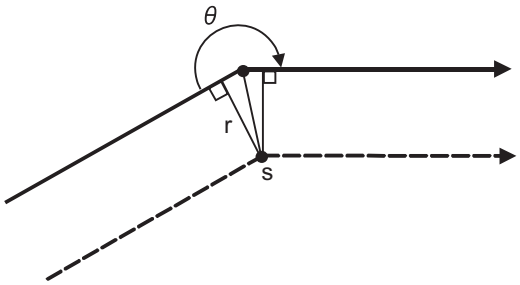  | 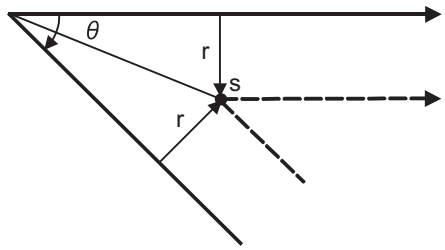  |
| **Linear -> Circular (Obtuse angle)** | **Linear -> Circular (Acute angle)** |
| 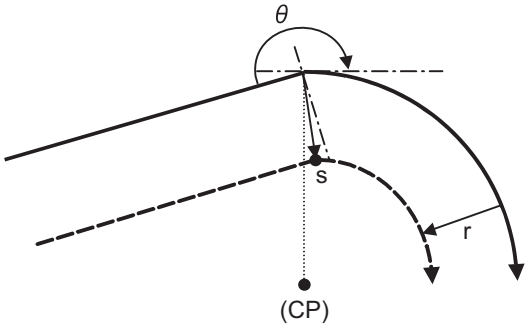  | 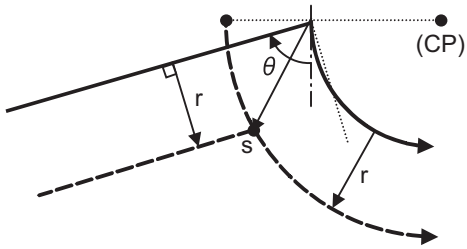  |
| **Circular -> Linear (Obtuse angle)** | **Circular -> Linear (Acute angle)** |
| 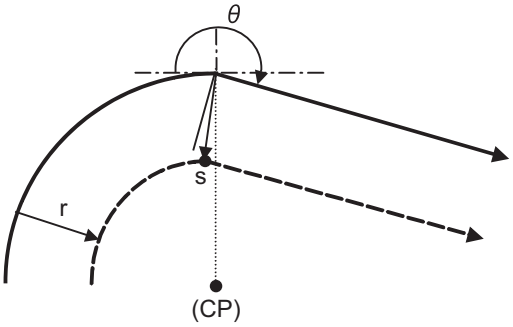  | 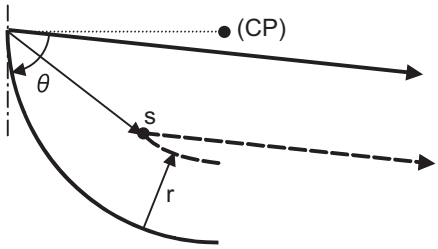  |
| **Circular -> Circular (Obtuse angle)** | **Circular -> Circular (Acute angle)** |
| 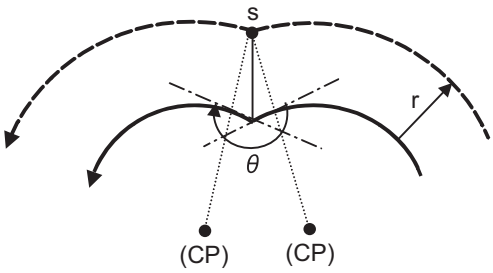  | 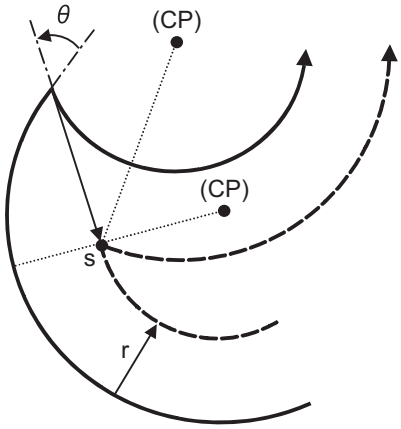  |

(CP) Center of circular

r : Tool nose radius

s : Single block stop point

Program path

Path of nose center

(3) When the circular end point is not on the circular

When the error is within the parameter "#1084 RadErr", the area from the circular start point to the end point is interpolated as a spiral circular.

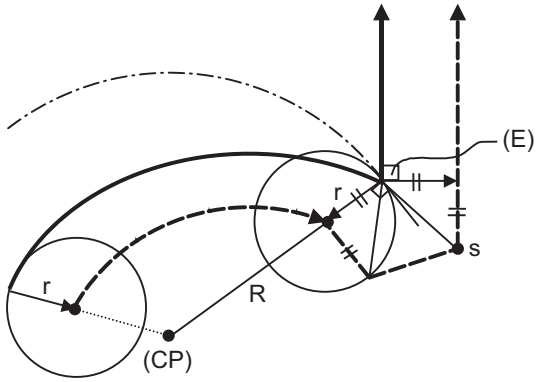


(E) End point of circular
(CP) Center of circular
r : Tool nose radius

(4) When the inner intersection point does not exist

In cases like the figure below, the intersection point of circulars A and B may not exist depending on the compensation amount.
In such cases, program error (P152) appears and the tool stops at the end point of the previous block.
In the pattern 1 and 2 of this figure, machining is possible because "r" (tool nose radius) is small.
In pattern 3, "r" (tool nose radius) is so large that an intersection does not exist and program error (P152) will occur.

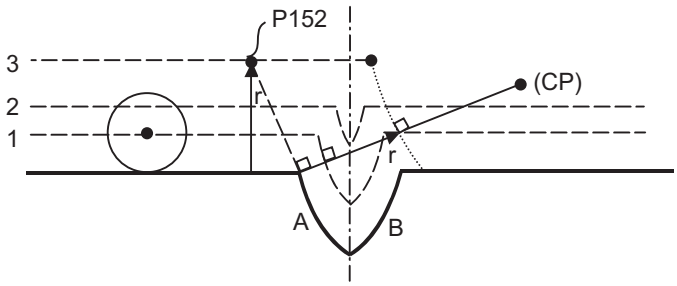


(CP) Center of circular A
r : Tool nose radius

Program path — Path of tool nose center

Path formed by connecting the intersections of arc A and arc B in each pattern

### Tool nose radius compensation cancel

In nose R compensation mode, nose R compensation will be canceled when any of the following conditions is met. However, there must be any movement command except a circular command.
If the compensation is canceled by a circular command, program error (P151) will occur.

(1) The G40 command has been executed.
(2) Tool No. T00 is executed.

The cancel mode is established once the compensation cancel command has been read, 5-block pre-reading is suspended and 1-block pre-reading will be operated.

### Tool nose radius compensation cancel operations

Tool nose R compensation cancel command results as follows.

(1) When there is no axis movement command in the G40 command block, the immediately preceding axis movement block operates as follows.
- When axis movement is commanded by G00, the nose radius compensation is canceled at the end point of the axis movement block.
- When axis movement is commanded by interpolation command such as G01, the nose radius compensation is valid up to the end point of the axis movement block.
  The nose radius compensation is canceled by a movement command issued at the G40 command block or later.

(2) If the nose radius compensation is canceled by T00 command, the axis moves to the position where the nose radius compensation was canceled.

(3) Relation of an inside corner/outside corner and cancel

(a)-1 When G40 is issued alone at an inside corner

| | |
|---|---|
| :<br>N1 G01 X_Z_F_;<br>N2 G00 X_Z_;<br>N3 G40;<br>: | 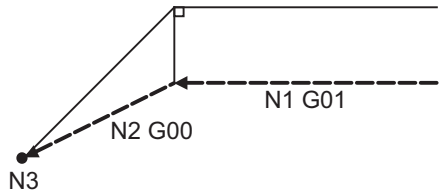 |
| :<br>N1 G01 X_Z_F_;<br>N2 G01 X_Z_;<br>N3 G40;<br>N4 M05;<br>N5 G00 X_Z_;<br>: | 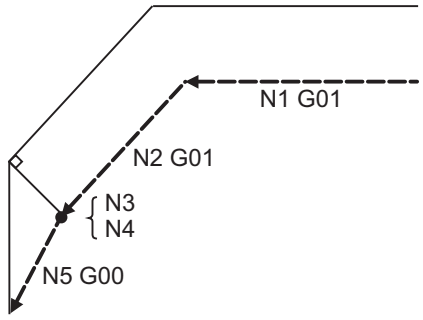 |
| :<br>N1 G01 X_Z_F_;<br>N2 G00 X_Z_;<br>N3 G01 X_Z_;<br>N4 G40;<br>N5 M05;<br>N6 G01 X_Z_;<br>: | 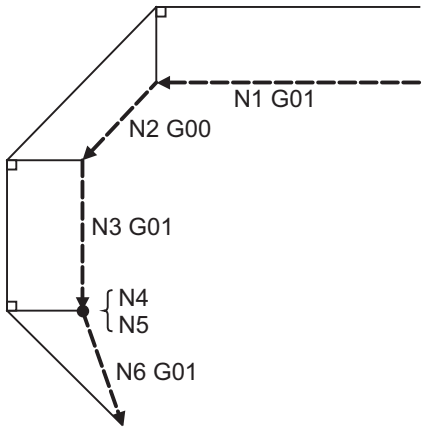 |
| :<br>N1 G01 X_Z_F_;<br>N2 G00 X_Z_;<br>N3 G00 X_Z_;<br>N4 G40;<br>: | 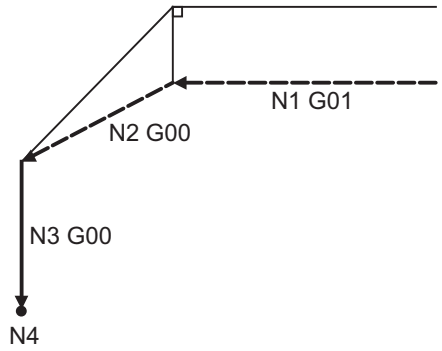 |

Program path  Path of tool nose center

(a)-2 When G40 is issued at an inside corner in the same block as a movement command

| Linear -> Linear | Circular -> Linear |
|---|---|
| 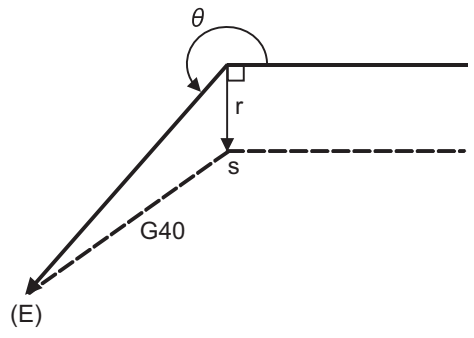  | 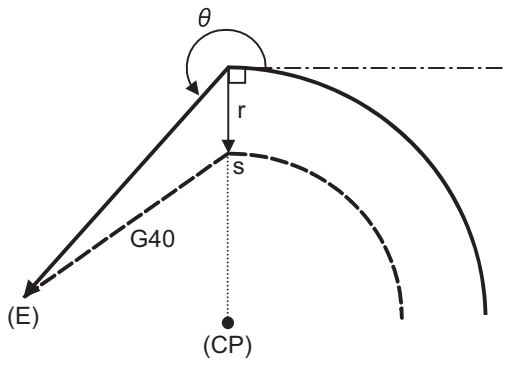  |

(E) End point
(CP) Center of circular
r : Tool nose radius
s : Single block stop point

Program path
Path of tool nose center

(b)-1 When G40 is issued alone at an outside corner (obtuse angle)

| | Type A | Type B |
|---|---|---|
| :<br>N1 G01 X_Z_F_;<br>N2 G00 X_Z_;<br>N3 G40;<br>: | 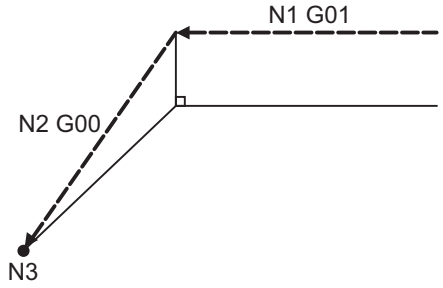 | |
| :<br>N1 G01 X_Z_F_;<br>N2 G01 X_Z_;<br>N3 G40;<br>N4 M05;<br>N5 G00 X_Z_;<br>: | 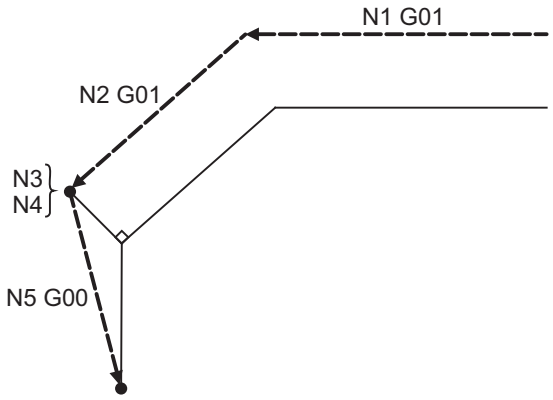 | |
| :<br>N1 G01 X_Z_F_;<br>N2 G00 X_Z_;<br>N3 G01 X_Z_;<br>N4 G40;<br>N5 M05;<br>N6 G01 X_Z_;<br>: | 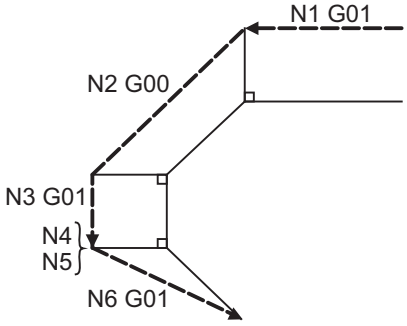 | 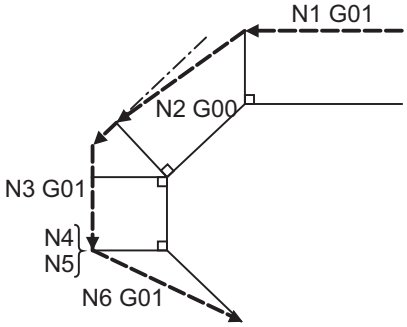 |
| :<br>N1 G01 X_Z_F_;<br>N2 G00 X_Z_;<br>N3 G00 X_Z_;<br>N4 G40;<br>: | 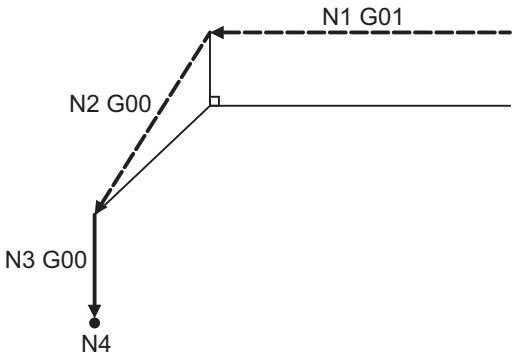 | |

Program path  Path of tool nose center

(b)-2 When G40 is issued at an outside corner (obtuse angle) in the same block as a movement command

| **Linear -> Linear (Type A)** | **Circular -> Linear (Type A)** |
|---|---|
| 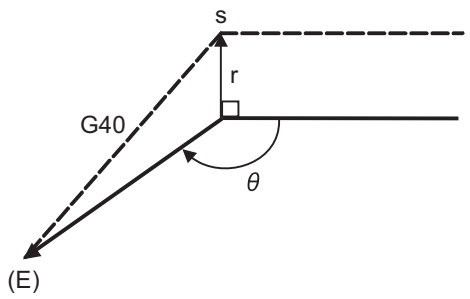  | 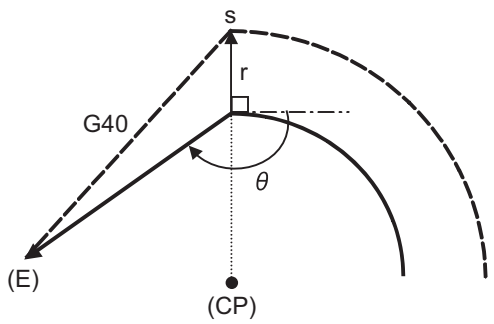  |
| **Linear -> Linear (Type B)** | **Circular -> Linear (Type B)** |
| 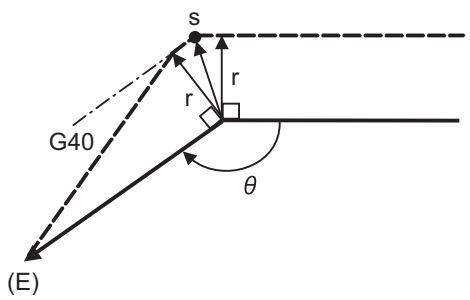  | 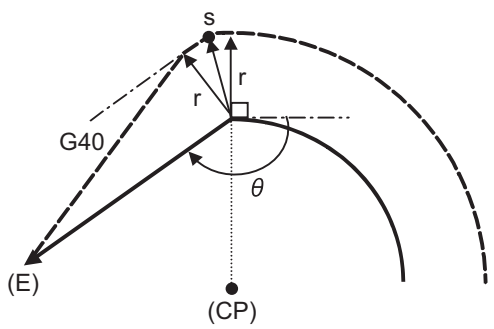  |

(E) End point
(CP) Center of circular
r : Tool nose radius
s : Single block stop point

Program path
Path of tool nose center

(c)-1 When G40 is issued alone at an outside corner (acute angle)

| | Type A | Type B |
|---|---|---|
| :<br>N1 G01 X_Z_F_;<br>N2 G00 X_Z_;<br>N3 G40;<br>: | 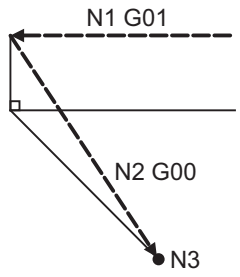 | |
| :<br>N1 G01 X_Z_F_;<br>N2 G01 X_Z_;<br>N3 G40;<br>N4 M05;<br>N5 G00 X_Z_;<br>: | 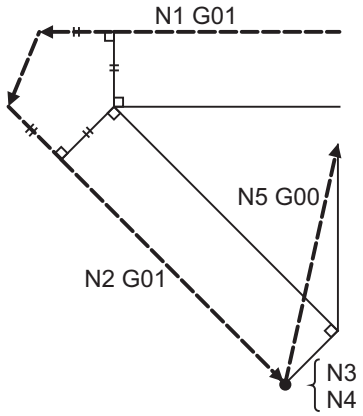 | |
| :<br>N1 G01 X_Z_F_;<br>N2 G00 X_Z_;<br>N3 G01 X_Z_;<br>N4 G40;<br>N5 M05;<br>N6 G01 X_Z_;<br>: | 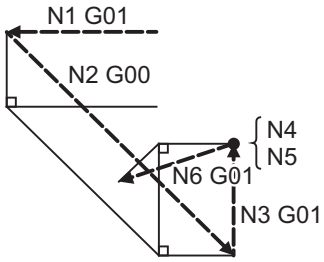 | 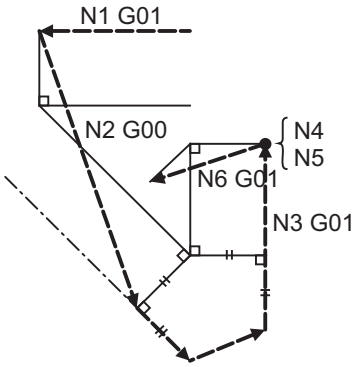 |
| :<br>N1 G01 X_Z_F_;<br>N2 G00 X_Z_;<br>N3 G00 X_Z_;<br>N4 G40;<br>: | 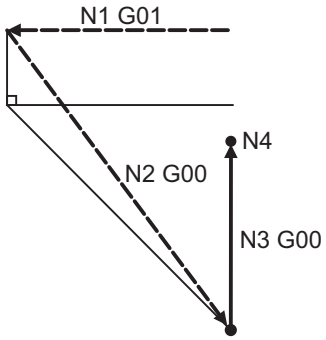 | |

——— Program path  - - - - Path of tool nose center

(c)-2 When G40 is issued at an outside corner (acute angle) in the same block as a movement command

| Linear -> Linear (Type A) | Circular -> Linear (Type A) |
|---|---|
| 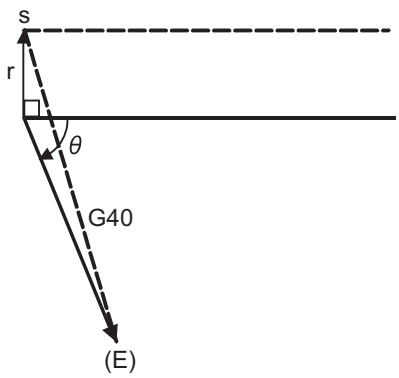 | 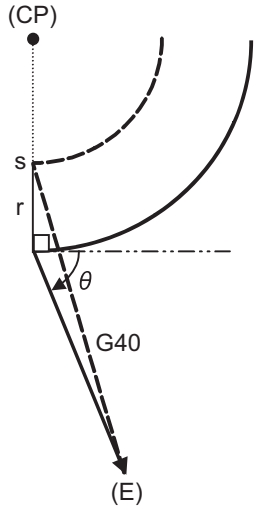 |
| **Linear -> Linear (Type B)** | **Circular -> Linear (Type B)** |
| 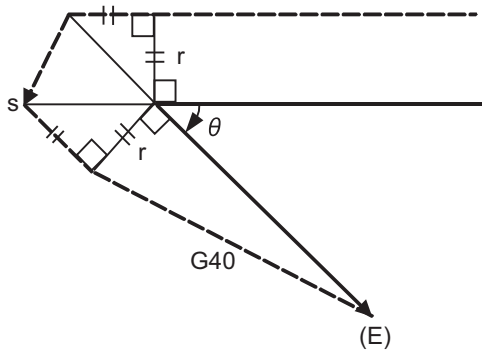 | 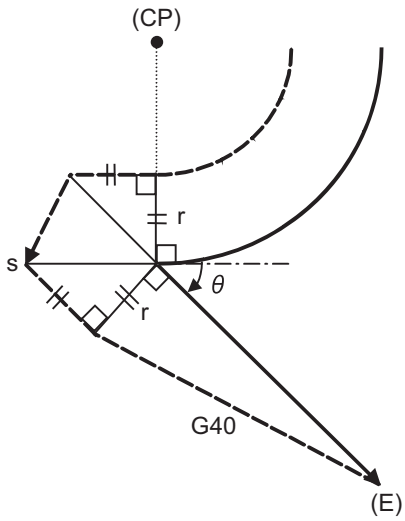 |

(E) End point
(CP) Center of circular
r : Tool nose radius
s : Single block stop point

Program path
Path of tool nose center

## 12.4.3 Other Operations during Nose R Compensation

### Detailed description

**Changing the compensation direction during nose R compensation**

The compensation direction is determined by the nose R compensation commands (G41, G42).

| G code | Compensation direction |
|---|---|
| G41 | Left-side compensation |
| G42 | Right-side compensation |

The compensation direction can be changed by changing the compensation command during the compensation mode without canceling the mode.
However, it is impossible to change the direction in the compensation start block and the next block.

(1) Linear -> Linear

(a) When there is an intersection (A) at the change of compensation direction

(b) When there is no intersection at the change of compensation direction

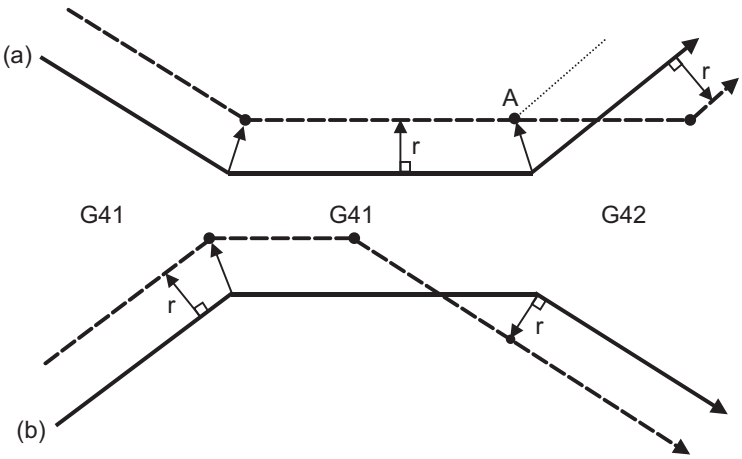


(2) Linear <-> Circular

(a) When there is an intersection (A) at the change of compensation direction

(b) When there is no intersection at the change of compensation direction

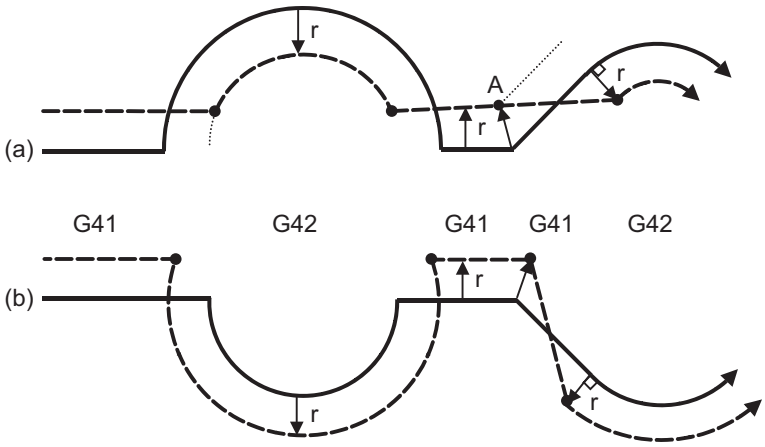


Program path  Path of tool nose center

(3) Circular -> Circular

(a) When there is an intersection at the change of compensation direction

(b) When there is no intersection at the change of compensation direction

(CP) Center of circular

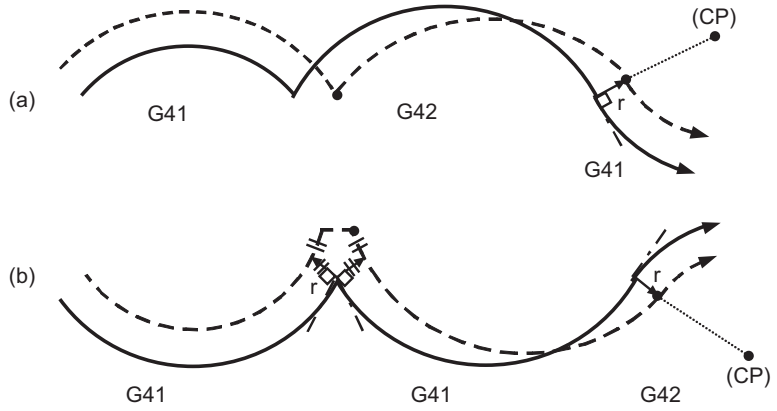


(4) Linear return

(5) When the compensation direction is switched using G41/G42, the arc may exceed 360°.

If the arc exceeds 360°, compensation will be performed as shown in the figure and uncut section will be left.

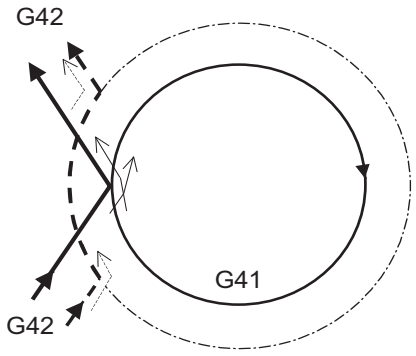


```
:
G42 G01 X_ Z_;
G41 G02 X_ Z_ I_ K_;
G42 G01 X_ Z_;
:
```

Program path

Path of tool nose center

Section left uncut

### Nose R compensation of path closed by G46/G41/G42

(1) G46 command operation

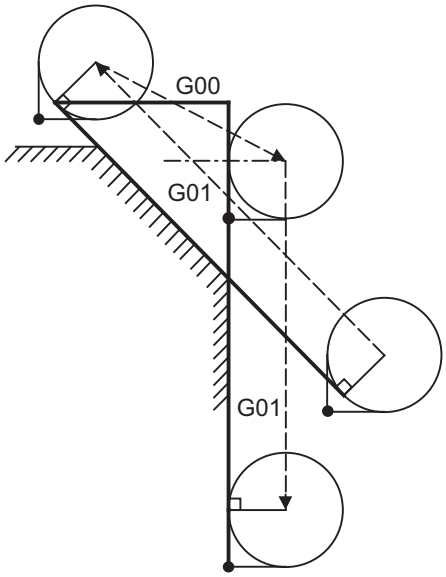


(2) G42 -> G41 command operation (When commanding G41 at (a))

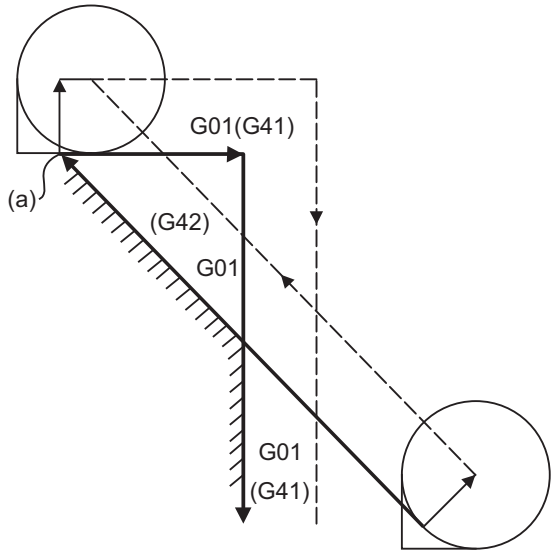


(3) G42 -> G41 command operation (When commanding G41 at (a))

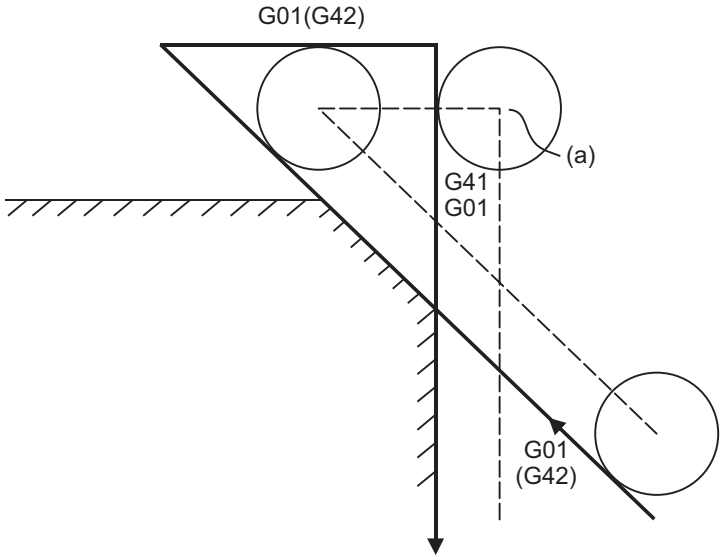


Program path  Path of tool nose center

### Command for eliminating compensation vectors temporarily

When the following command is issued in the compensation mode, the compensation vectors are temporarily eliminated and then, compensation mode will automatically return.
In this case, the compensation is not canceled, and the tool goes directly from the intersection point vector to the point without vectors, in other words, to the programmed command point. When returning to the compensation mode, it goes directly to the intersection point.

(1) Reference position return command

Temporarily no compensation vectors at intermediate point. (Reference position when there is no intermediate point).

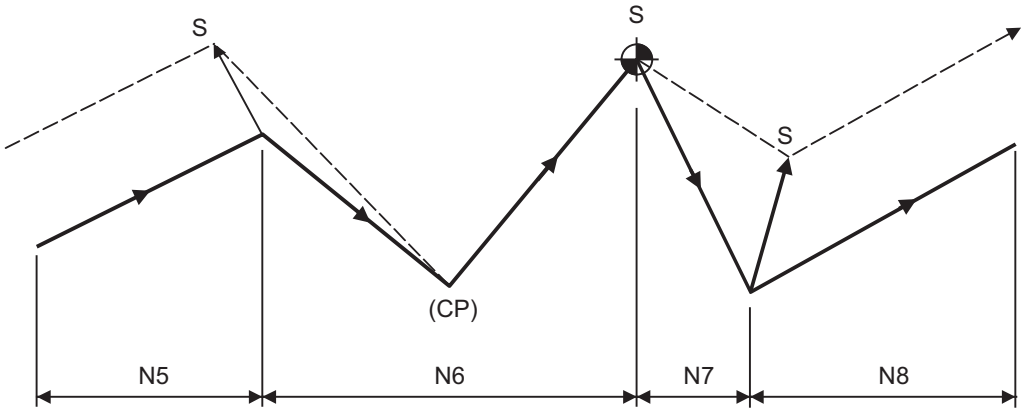


```
 (G41)  :
N5 G01 U 30. W 60. ;
N6 G28 U-40. W 50. ;
N7        U-60. W 30. ;
N8        U 40. W 70. ;
          :
```

(CP) Intermediate point

(2) The compensation vector will be eliminated temporarily with the G53 command (Basic machine coordinate system selection).

<Note>

- The compensation vectors do not change with the coordinate system setting (G92) command.

(3) Positioning (G00) commands

Tool nose radius compensation is temporarily canceled with G00 commands.

```
    :
N1 G01 X_Z_F_;
N2 G00 X_Z_;
N3 G00 X_Z_;
N4 G00 X_Z_;
N5 G01 X_Z_;
    :
```

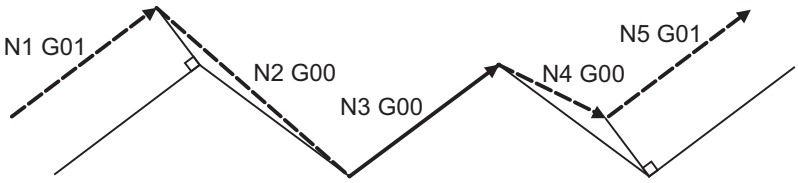


```
    :
N1 G01 X_Z_F_;
N2 G01 X_Z_;
N3 G00 X_Z_;
N4 G00 X_Z_;
N5 G01 X_Z_;
    :
```

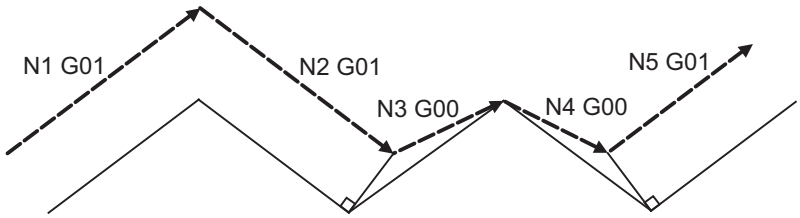


```
    :
N1 G01 X_Z_F_;
N2 G01 X_Z_;
N3 G01 X_Z_;
N4 G00 X_Z_;
N5 G01 X_Z_;
    :
```

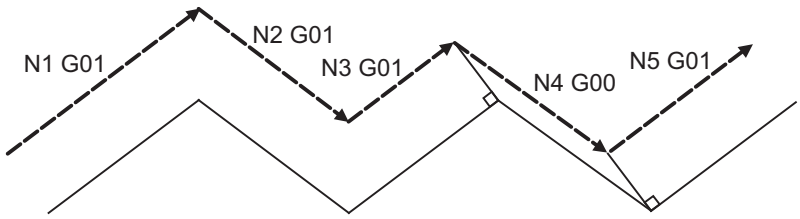


(4) G33 thread cutting command

Tool nose radius compensation will not be applied to the G33 block.

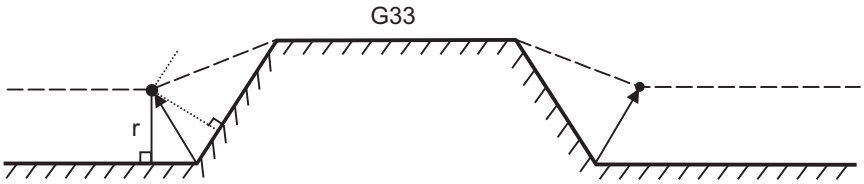


(5) Compound type fixed cycle for turning machining

In lathe system, when a compound type fixed cycle for turning machining I command (G70, G71, G72, G73) is issued, the tool nose radius compensation will temporarily be canceled. The finished shape to which tool nose radius compensation has been applied is cut with the compensation cancel state, and upon completion, operation will automatically return to the compensation mode.

### Blocks without movement

The following blocks are known as blocks without movement.

| | |
|---|---|
| M03 ; | M command |
| S12 ; | S command |
| T0101 ; | T command |
| G04X500 ; | Dwell |
| G10P01R50 ; | Compensation amount setting |
| G92X600. Z500. ; | Coordinate system setting |
| Y40. ; | Movement outside the compensation plane |
| G00 ; | G code only |
| U0 ; | Movement amount 0 |

(1) When command is assigned at start of the compensation

Compensation vector cannot be created when there are four or more successive blocks without movement, or when pre-reading prohibiting M command is issued.

```
N1 U60.W30.T0101 ;
N2 G41 ;
N3 G04 X1000 ;
N4 F100 ;
N5 S500 ;
N6 M3 ;
N7 U- 50.W20. ;
N8 U- 20.W50. ;
```

Block without movement

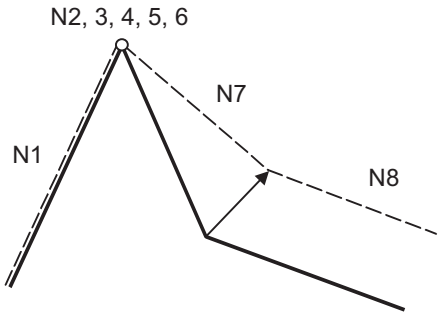


(2) When command is assigned in the compensation mode

Compensation vector will be created as normal when there are no more than four successive blocks without movement, or when pre-read prohibiting M command is not issued.

```
N6 U200. W100. ;
N7 G04X1000 ;          ...  Block without movement
N8 W200 ;
```

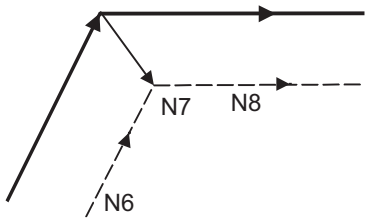


Block N7 is executed at N7 in the figure.

Compensation vector will be created perpendicularly to the end point of the previous block when there are four or more successive blocks without movement, or when pre-read prohibiting M command is issued.
In this case, a cut may occur.

```
N6 U200. W100. ;
N7 G04 X1000 ;
N8 F100 ;
N9 S500 ;
N10 M4 ;
N11 W100 ;
```

Block without movement

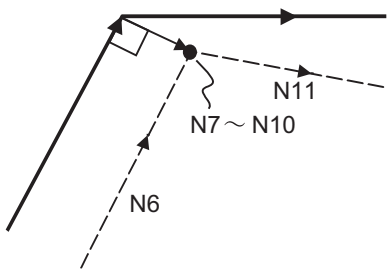

(3) When commanded together with compensation cancel

Only the compensation vectors are canceled when a block without movement is commanded together with the G40 command.

```
N6 U200. W100. ;
N7 G40 M5 ;
N8 U50. W100. ;
```

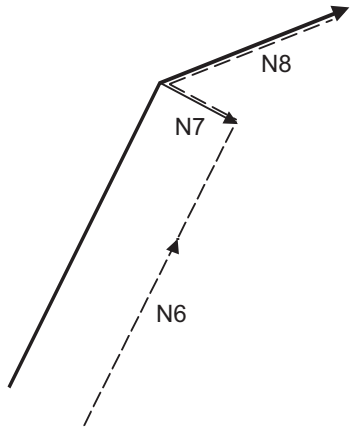


## When I, J, K are commanded in G40

A perpendicular vector is created in the block before G40.

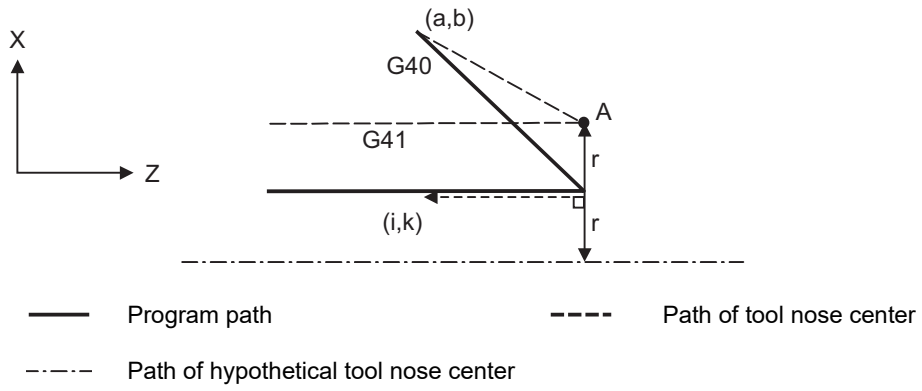


## Corner movement

When a multiple number of compensation vectors are created at the joints between movement command blocks, the tool will move in a straight line between these vectors. This action is called corner movement.
When the vectors do not coincide, the tool moves in order to machine the corner although this movement is part and parcel of the joint block.
Consequently, operation in the single block mode will execute the previous block + corner movement as a single block and the remaining joining movement + following block will be executed as a single block in the following operation.

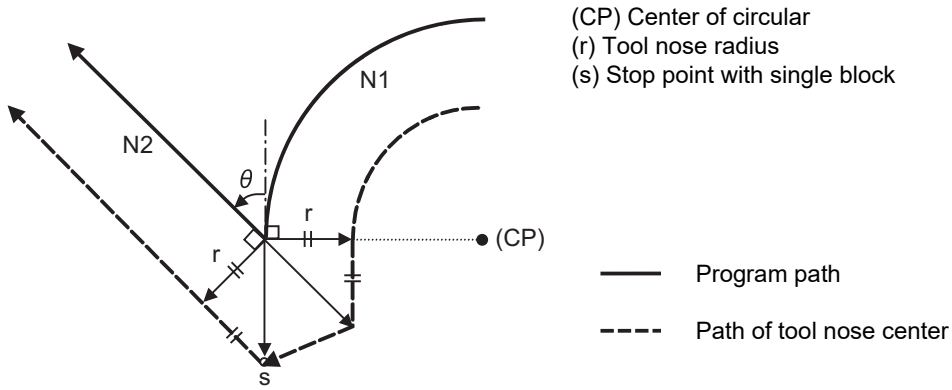

## 12.4.4 G41/G42 Commands and I, J, K Designation

### Function and purpose

The compensation direction can be intentionally changed by issuing the G41/G42 command and I, J, K in the same block.

### Command format

**G18 (Z-X plane) G41/G42 X__ Z__ I__ K__ ;**

Assign a linear command (G00, G01) in a movement mode.

### Detailed description

**I, K type vectors (G18 X-Z plane selection)**

This section describes the new I, K type vectors (G18 plane) created by this command. (Similar descriptions apply to vector I, J for the G17 plane and to J, K for the G19 plane.)
As shown in the following figures, I, K type vectors create compensation vectors which are perpendicular to the direction designated by I, K and equivalent to the compensation amount, without the intersection point calculation of the programmed path. The I, K vectors can be commanded even in the mode (G41/G42 mode in the block before) and even at the compensation start (G40 mode in the block before).

(1) When I, K is commanded at compensation start

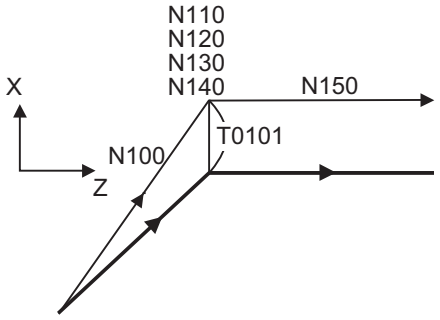


```
 (G40)
    :
N100 G41 U100. W100.K150.T0101 ;
N110 G04 X1000 ;
N120 G01 F1000 ;
N130 S500 ;
N140 M03 ;
N150 Z150. ;
    :
```

Program path

Path of tool nose center

(2) When there are no movement commands at the compensation start.

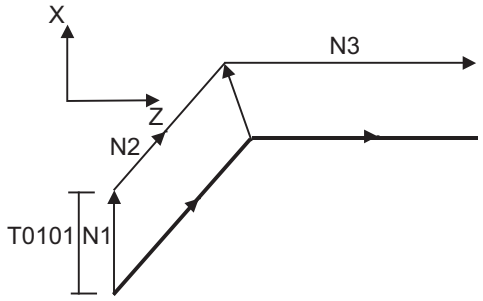


```
(G40)
  :
N1 G41 K150. T0101 ;
N2 U100. W100. ;
N3 W150. ;
  :
```

Program path

Path of tool nose center

(3) When I, K has been commanded in the mode (G18 plane)

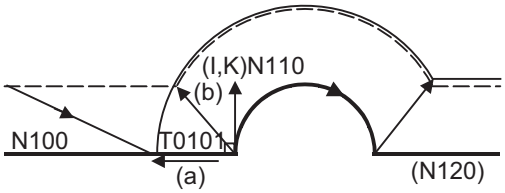


```
  :
(G18 G41)
N100 G41 T0101 G01 W150. I50. ;
N110 G02 W100.I50. ;
N120 G01 W100. ;
  :
```

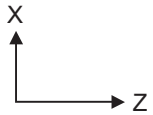


(a) I, K type vector (b) Intersection point calculation type vector

Program path

Path of tool nose center

Path after intersection point calculation

(4) When I, J has been commanded in a block without movement

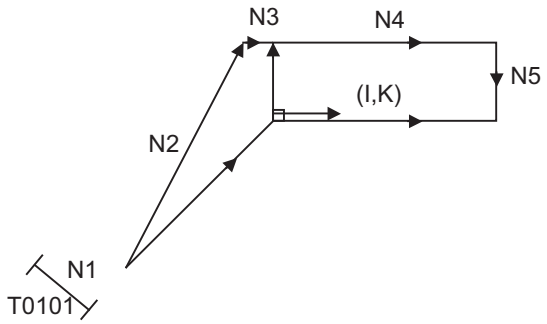


```
N1 G41 T0101 G01 F1000 ;
N2 U100. W100. ;
N3 G41 K50. ;
N4 W150. ;
N5 G40 ;
```

## Offset vector direction

(1) In G41 mode

Direction produced by rotating the direction commanded by I, K by 90° to the left when looking at the zero point from the forward direction of the Y axis (3rd axis).

| (Example 1) With K100. | | (Example 2) With K-100. | |
|---|---|---|---|
| 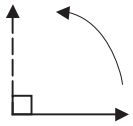 | | 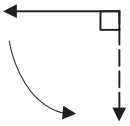 | |
| ←——— | (0, 100) IK direction | ←——— | (0, -100) IK direction |
| ←– – – – | Offset vector direction | ←– – – – | Offset vector direction |

(2) In G42 mode

Direction produced by rotating the direction commanded by I, K by 90° to the right when looking at the zero point from the forward direction of the Y axis (3rd axis).

| (Example 1) With K100. | | (Example 2) With K-100. | |
|---|---|---|---|
| 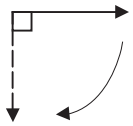 | | 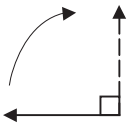 | |
| ←——— | (0, 100) IK direction | ←——— | (0, -100) IK direction |
| ←– – – – | Offset vector direction | ←– – – – | Offset vector direction |

## Selection of offset modal

G41 and G42 modals can be switched over at any time.

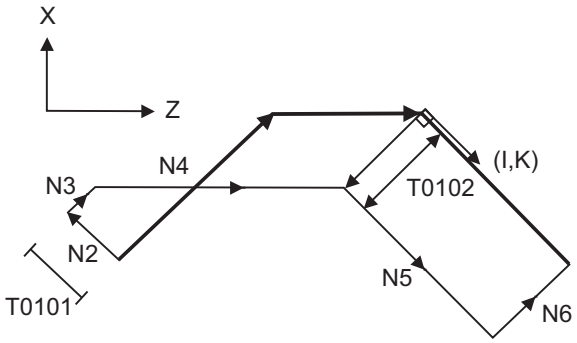


```
N1 G28 X0Z0 ;
N2 G41 T0101 F1000 ;
N3 G01 U100. W100. ;
N4 G42 W100. I - 100. K100.T0102 ;
N5 U- 100. W100. ;
N6 G40 ;
N7 M02 ;
%
```

### Compensation amount for offset vectors

The compensation amount is determined by the offset No. (modal) in a block with the I, K designation.

<Example 1>

Vector A is the compensation amount registered in tool offset No. modal 1 of the N100 block.

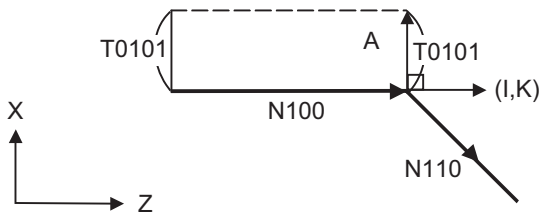


```
(G41 T0101)
    :
N100 G41 W150. K50. ;
N110 U- 100. W100. ;
    :
```

<Example 2>

Vector B is the compensation amount registered in tool offset No. modal 2 of the N200 block.

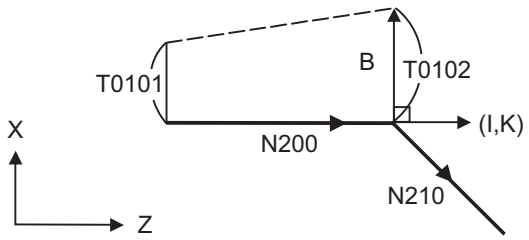


```
(G41 T0101)
    :
N200 G41 W150. K50. T0102 ;
N210 U - 100. W100. ;
    :
```

### Precautions

(1) Issue the I, K type vector in a linear mode (G00, G01). If it is in an arc mode at the start of compensation, program error (P151) will occur.
When it is in the offset mode as well as in the arc mode, I, K will be designated at the center of the circular.

(2) When the I, K type vector is designated, it will not be deleted (interference avoidance) even if there is interference. Consequently, overcutting may occur.
In the figure below, cutting will occur in the shaded section.

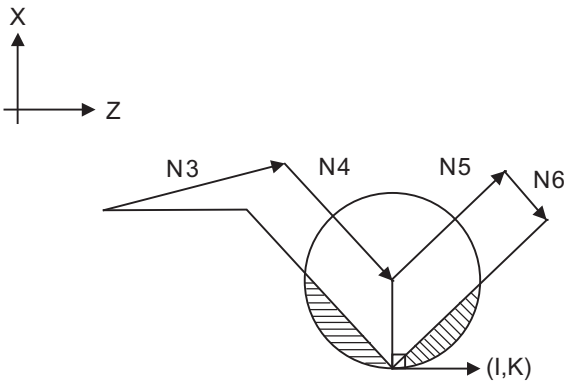


```
N1 G28 X0Z0 ;
N2 G41 T0101 F1000 ;
N3 W100. ;
N4 G41 U-100. W100. K10. ;
N5 U100. W100. ;
N6 G40 ;
N7 M02 ;
```

(3) Refer to the following table for the compensation methods depend on the presence or absence of G41/G42 command and I, K, (J) command.

| G41/G42 | I,K (J) | Compensation methods |
|---|---|---|
| No | No | Intersection point calculation type vector |
| No | Yes | Intersection point calculation type vector |
| Yes | No | Intersection point calculation type vector |
| Yes | Yes | I, K type vector<br>No insertion block |

## 12.4.5 Interrupts during Nose R Compensation

### Detailed description

**MDI interruption**

Nose R compensation is valid in any automatic operation mode - whether tape, memory or MDI mode.
The figure below shows what happens by MDI interruption after stopping the block during tape or memory mode.
S in the figure indicates the stop position with single block.

(1) Interrupt without movement (tool path does not change)

| Automatic operation | | MDI interruption |
|---|---|---|
| N1 G41 T0101; | | |
| N2 U50. W20. ; | | |
| | <- | S1000 M3; |
| N3 G03 U-40. W40. R70. ; | | |

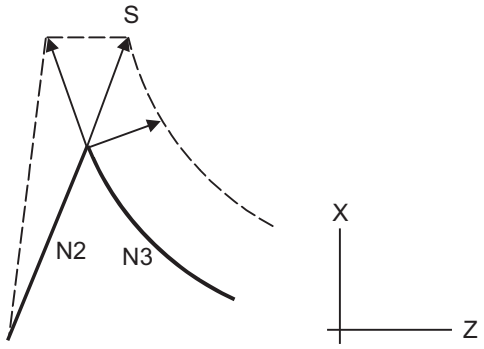


(2) Interrupt with movement
The compensation vectors are automatically re-calculated in the movement block after interrupt.

With linear interrupt

| Automatic operation | | MDI interruption |
|---|---|---|
| N1 G41 T0101; | | |
| N2 U50. W20. ; | | |
| | <- | U-30. W50. ; |
| | | U50. W30. ; |
| N3 G03 U-40. W40. R70. ; | | |

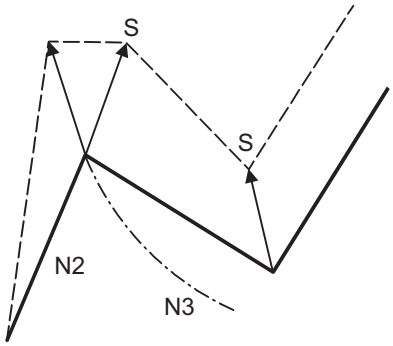


With circular interruption

| Automatic operation | | MDI interruption |
|---|---|---|
| N1 G41 T0101; | | |
| N2 U50. W20. ; | | |
| | <- | G02 U-40. W40. R70. ; |
| | | G01 W40. ; |
| N3 G03 U-40. W40. R70. ; | | |

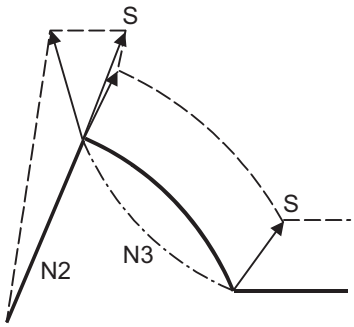

### Manual interruption

(1) Interrupt with manual absolute OFF.
The tool path will deviate from the compensated path by the interrupt amount.

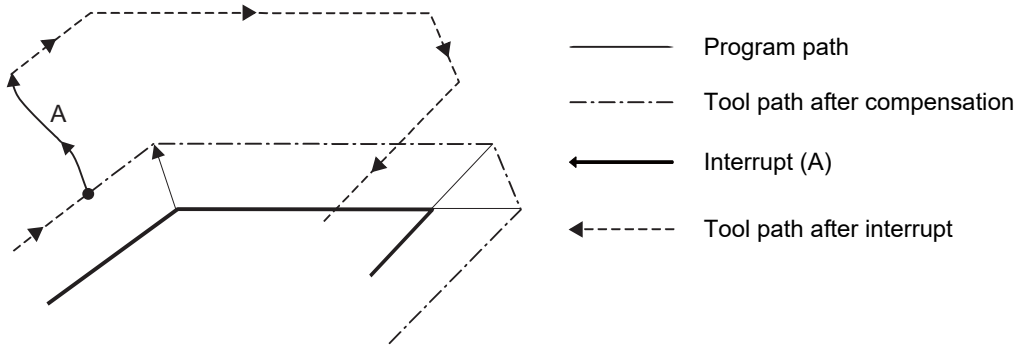


(2) Interrupt with manual absolute ON
In the incremental mode, the same operation will be performed as the manual absolute OFF.
In the absolute mode, however, the tool returns to its original path at the end point of the block following the interrupted block, as shown in the figure.

**[Line-Line-Line]**

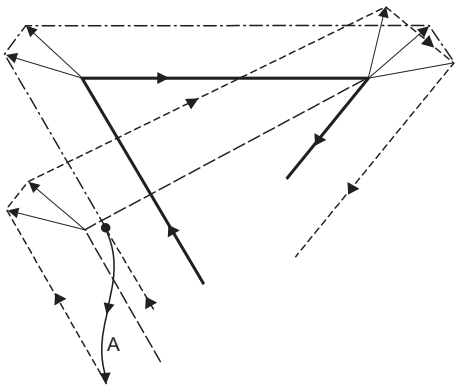


**[Line-arc-Line]**

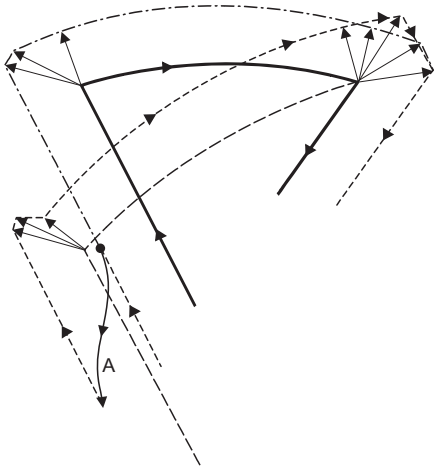


Program path

Tool path after compensation

Interrupt (A)

Tool path after interrupt

## 12.4.6 General Precautions for Nose R Compensation

### Precautions

**Assigning the compensation amounts**

(1) The compensation amount is normally assigned by designating the No. of the compensation amount by the last 1 or 2 digits of the T code. Depending on the machine specifications, the high-order digits may be used. The T code will remain valid once designated until another T code is subsequently commanded.
Besides being used to designate the compensation amounts for tool nose radius compensation, the T codes are also used to designate the compensation amounts for tool length compensation.

(2) It depends on the setting of the parameter "#8117 OFS Diam DESIGN" to specify the compensation amount by the diameter value or the radius value.
#8117 = 0: Radius value
#8117 = 1: Diameter value

(3) Compensation amounts are normally changed when a different tool has been selected in the compensation cancel mode. However, when an amount is changed during the compensation mode, the vectors at the end point of the block are calculated using the compensation amount designated in that block.

**Corner judgment method**

(1) The criterion to execute the outer rounding at the small corner in tool radius compensation depends on the MTB specifications (parameter "#1289 ext25/bit0").

**Errors during tool nose radius compensation**

(1) An error will occur when any of the following commands is programmed during tool nose radius compensation.
G17, G18, G19 (when a plane different from the one used during the compensation is commanded (P112))
G111 (P112)
G31(P608)
G74,G75,G76(P155)
G81 - G89(P155)

(2) A program error will occur when a tool nose point other than 1 to 8 is designated during the G46 mode. (P158)

(3) A program error will occur when the compensation direction is not determined by the movement vector of the initial cutting command even when the tool nose radius compensation operation has started in the G46 mode and 5 blocks have been pre-read. (P156)

(4) A program error will occur when a circular command is issued in the first or last block of the tool nose radius compensation. (P151)

(5) A program error will occur when the compensation direction is reversed in the G46 mode. (P157) A parameter can be set to move the tool in the same compensation direction. (Control parameter "#8106 G46 NO REV-ERR")

(6) A program error will occur during tool nose radius compensation when the intersection point of single block skip in the interference block processing cannot be calculated. (P152)

(7) A program error will occur when there is an error in one of the pre-read blocks during tool nose radius compensation.

(8) A program error will occur when an interference occurs under no interference avoidance conditions during tool nose radius compensation. (P153)

(9) A program error will occur when a tool nose radius compensation command is issued even though the tool nose radius compensation specification is not provided. (P150)

## 12.4.7 Interference Check

### Function and purpose

A tool, whose tool nose has been compensated under the tool nose radius compensation function by the usual two-block pre-read, may sometimes cut into the workpiece.
This is known as interference, and interference check is the function which prevents this from occurring.
The table below shows the three functions of interference check and each can be selected for use by parameter.

| | Function | Parameter | | Operation |
|---|---|---|---|---|
| | | #8102 COLL. ALM OFF | #8103 COLL. CHK OFF | |
| (1) | Interference check alarm function | 0 | 0 | Operation stops with a program error (P153) before executing a block which will cause cutting. |
| (2) | Interference check avoidance function | 1 | 0 | The tool path is changed to prevent cutting from occurring.<br>If the path cannot be changed, a program error (P153) occurs and the program will be stopped. |
| (3) | Interference check invalid function | 0/1 | 1 | Cutting continues as is, even if the workpiece is cut into.<br>Use in the fine segment program. |

### Detailed description

(Example)

```
(G41)
N1 G01 X100. Z50.;
N2 Z70;
N3 X300. Z120.;
```

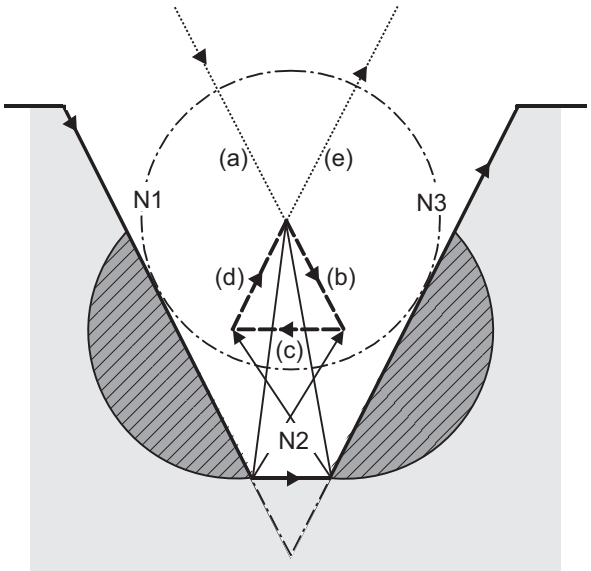


(1) With alarm function

An alarm is given when N1 is executed. The buffer correction function can thus be used to change N1 to the following, enabling machining to continue: N1 G01 X-100. Z-20. ;

(2) With avoidance function

The intersection of N1 and N3 is calculated to create interference avoidance vectors.
Path of tool nose center is (a) -> (e).

(3) With interference check invalid function

The tool passes while cutting the N1 and N3 line.
Path of tool nose center is (a)->(b)->(c)->(d)->(e)

### Operation when interference avoidance function is valid

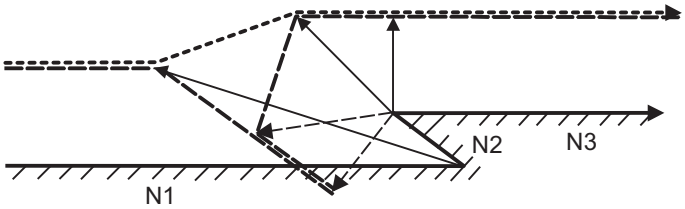


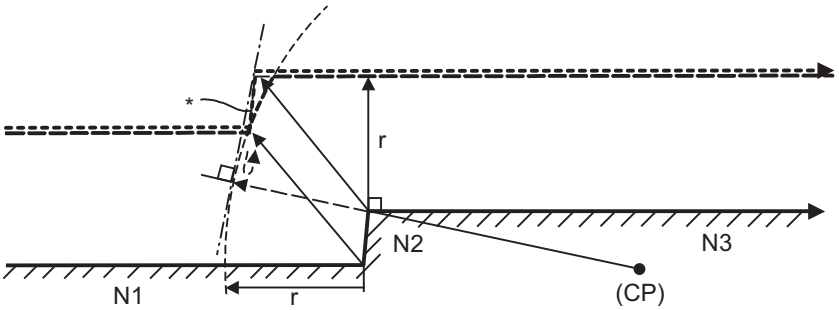


Program path

Path of tool nose center when interference check is invalid

Tool center path when interference is avoided (*: Linear movement)

Valid vector

Invalid vector

In the case of the figure below, the groove will be left uncut.

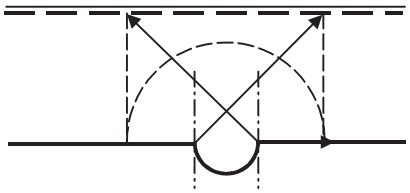

Program path

Path of tool nose center

Tool center path when interference is avoided

## Interference check alarm

The interference check alarm occurs under the following conditions.

(1) When the interference check alarm function has been selected

When all vectors at the end of its own block have been deleted
As shown in the figure below, when vectors 1 through 4 at the end point of the N1 block have all been deleted, program error (P153) will occur prior to N1 execution.

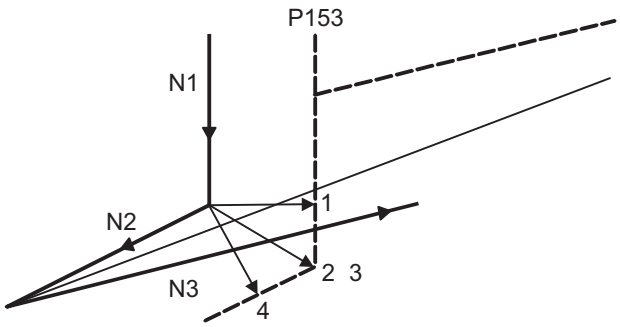


(2) When the interference check avoidance function has been selected

(Example 1) When there are valid vectors at the end point of the following blocks even when all the vectors at the end point of its own block have been deleted

When, in the figure below, the N2 interference check is conducted, the N2 end point vectors are all deleted but the N3 end point vectors are regarded as valid.
Program error (P153) now occurs at the N1 end point and the operation stops.

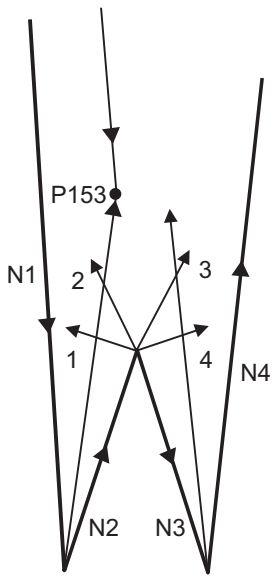

In the case shown in the figure below, the tool will move in the reverse direction at N2.
Program error (P153) now occurs before executing N1 and the operation stops.

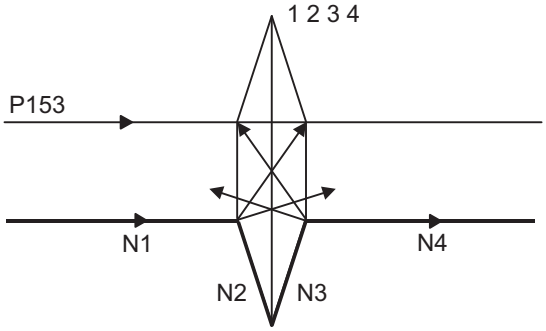


(Example 2) When avoidance vectors cannot be created

Even when, as in the figure below, the conditions for creating the avoidance vectors are satisfied, it may still be impossible to create avoidance vectors, or the interference vectors may interfere with N3.
Program error (P153) will occur at the N1 end point when the vector intersecting angle is more than 90° and the operation will stop.

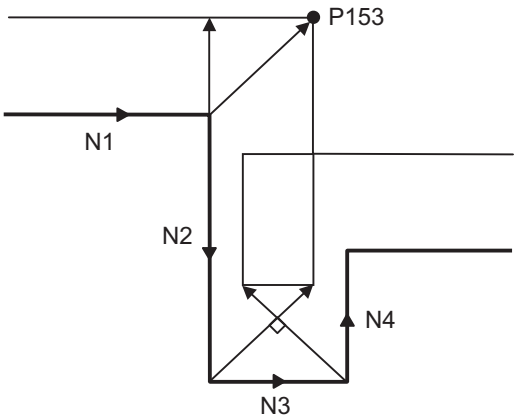


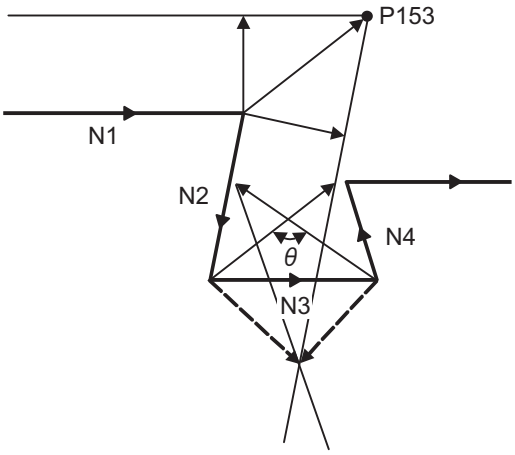

(Example 3) When the program advance direction and the advance direction after compensation are reversed

When grooves, narrower than the nose R diameter with parallel or widening bottom, are programmed, it will still be regarded as interference even if there is actually no interference.

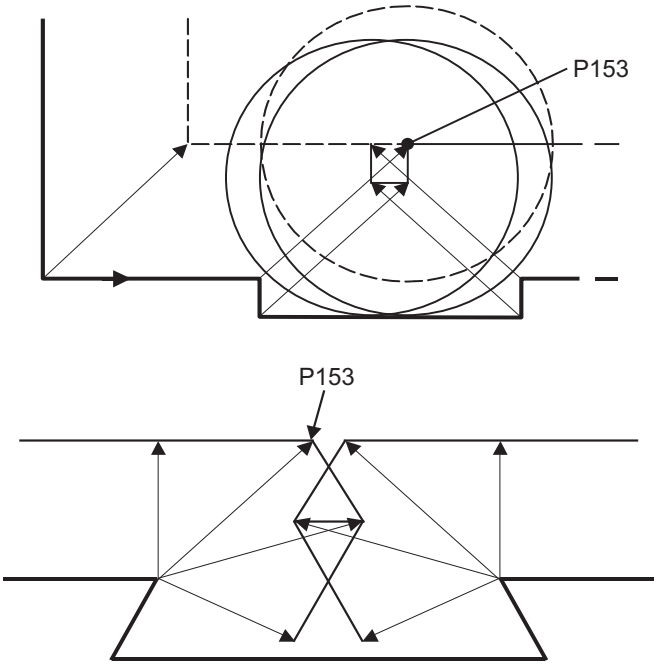

(Example 4) When vectors at the end point of the block immediately before the command to eliminate compensation vectors temporarily cause an interference

Interference check will be executed also at the end point of the block immediately before the command to eliminate compensation vectors temporarily, similarly with the case compensation vectors are not eliminated. It may be regarded as an interference even if there is actually no interference. If regarded as an interference, a program error (P153) will occur.

In the figure below, only vector 1 is left as an end point vector in N2 because of the N3 G53 command to temporarily eliminate compensation vectors. However, the interference check will still be conducted to vector 1 to 4 and an interference will be detected.
Program error (P153) now occurs at the end point of the previous block and the operation stops.

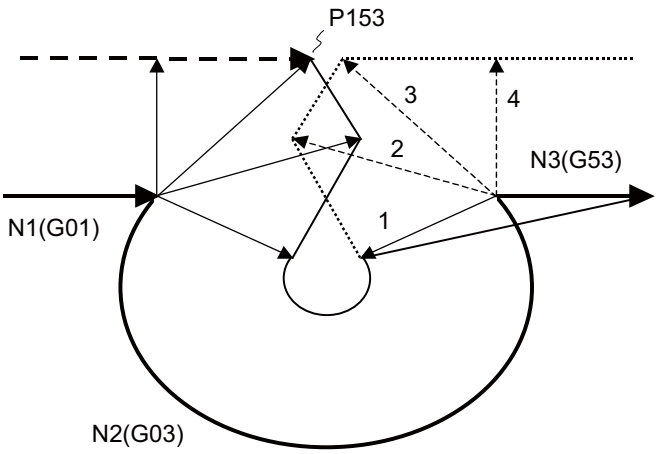


Program path

Path of tool nose center

Path of tool nose center when the interference check is invalid

Path of tool nose center when the interference check is invalid in N3 due to a command (G01 etc.) not to eliminate compensation vectors.

Valid vector

Invalid vector (Invalid, however, subject to interference check)

# 13

# Fixed Cycle

# 13.1 Fixed Cycle for Turning Machining

## Function and purpose

When performing rough cutting and other cuttings by turning machining, fixed cycles are effective in simplifying machining programs. The whole commands can be performed in a single block, which normally requires several blocks. The types of fixed cycles for turning machining are listed below.

| G code | Function |
|---|---|
| G77 | Longitudinal cutting cycle |
| G78 | Thread cutting cycle |
| G79 | Face cutting cycle |

## Detailed description

(1) Fixed cycle commands are modal G codes. They are valid until another command in the same modal group or a cancel command is issued.

The following G code cancel commands are available.

G00, G01, G02, G03
G09,
G10,G11
G27, G28, G29, G30
G33,G34
G37,
G92,
G52,G53
G65

(2) The fixed cycle call becomes the movement command block call.
By the movement command block call, the fixed cycle macro subprogram is called only when there is an axis movement command during the fixed cycle mode. It is executed until the fixed cycle is canceled.

(3) A manual interruption can be applied while a fixed cycle for turning machining (G77 to G79) is being executed. Upon completion of the interrupt, however, the tool must be returned to the position where the manual interruption was applied and then the fixed cycle for turning machining should be resumed.
If it is resumed without returning the tool, all subsequent operations will deviate from the original path by the manual interruption amount.

## 13.1.1 Longitudinal Cutting Cycle; G77

### Function and purpose

The longitudinal cutting cycle performs continuous straight and taper cutting in the longitudinal direction.

### Command format

**Straight cutting**

```
G77 X/U__ Z/W__ F__ ;
```

| | |
|---|---|
| X/U | X axis end point coordinate (*1) |
| Z/W | Z axis end point coordinate (*1) |
| F | Feedrate |

**Taper cutting**

```
G77 X/U__ Z/W__ R__ F__ ;
```

| | |
|---|---|
| X/U | X axis end point coordinate (*1) |
| Z/W | Z axis end point coordinate (*1) |
| R | Taper depth (radius designation, incremental position, sign required) |
| F | Feedrate |

(*1) If the commanded axis and selected plane are different when the fixed cycle for turning machining is commanded, or if the movement amount is not specified in either or both of the selected plane axis commands, a program error (P114) will occur. Whether this is judged to be a program error depends on the MTB specifications (parameter "#1241 set13/bit4" ("fixed cycle for turning machining" selected-plane axis check disabled)).

## Detailed description

### Straight cutting

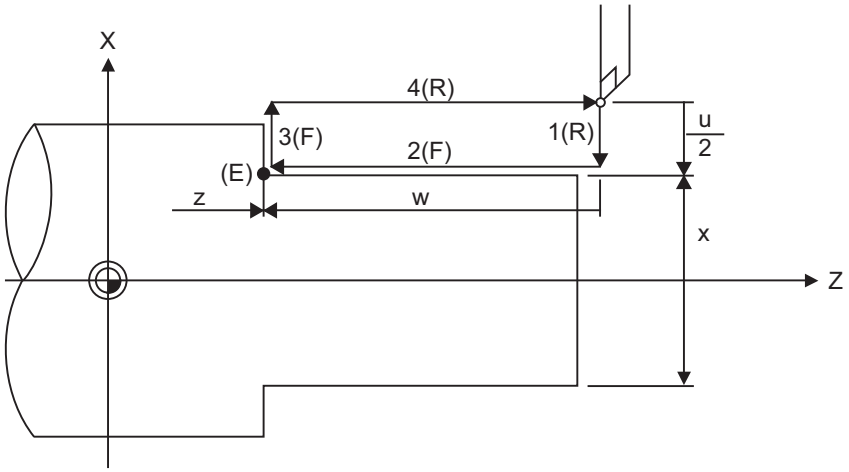


(R) Rapid traverse (F) Cutting feed (E) End point coordinates

### Taper cutting

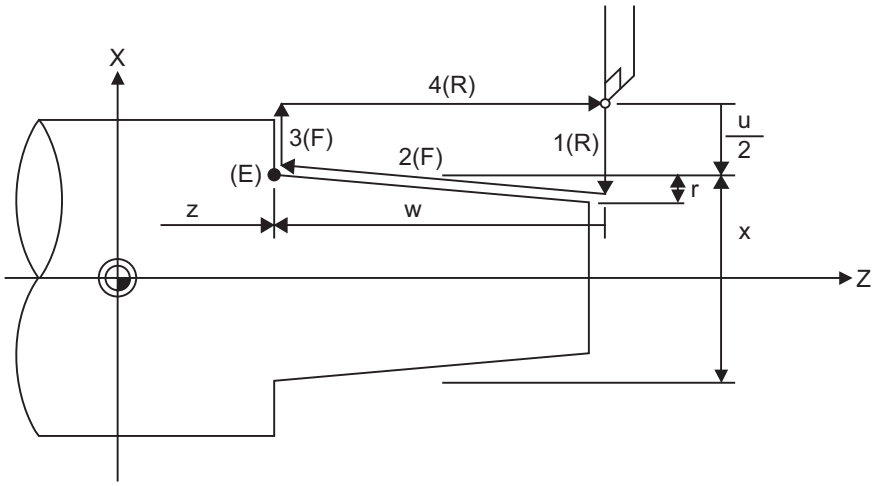


(R) Rapid traverse (F) Cutting feed (E) End point coordinates

## Detailed description

With a single block, the tool stops at the end points of operations 1, 2, 3 and 4 shown above.

Depending on the signs of u, w and r, the following shapes are created.

(a) u < 0, w < 0, r < 0

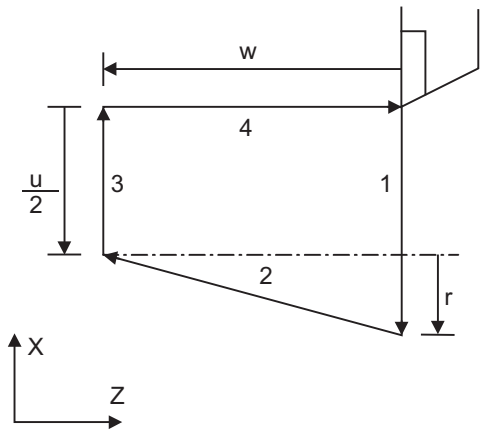


(b) u < 0, w < 0, r > 0

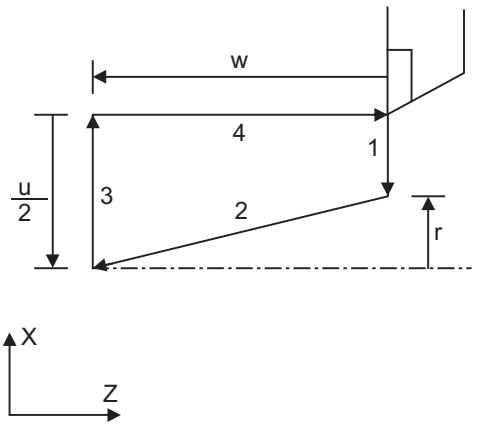


(c) u > 0, w < 0, r < 0

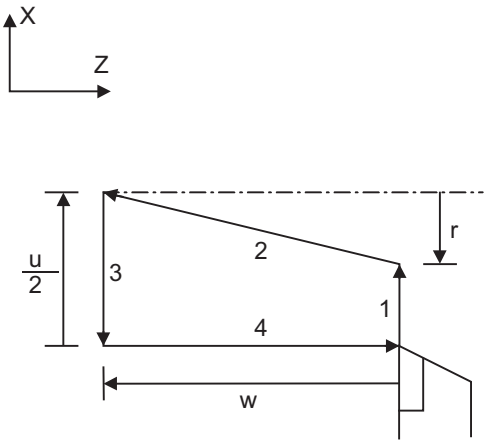


(d) u > 0, w < 0, r > 0

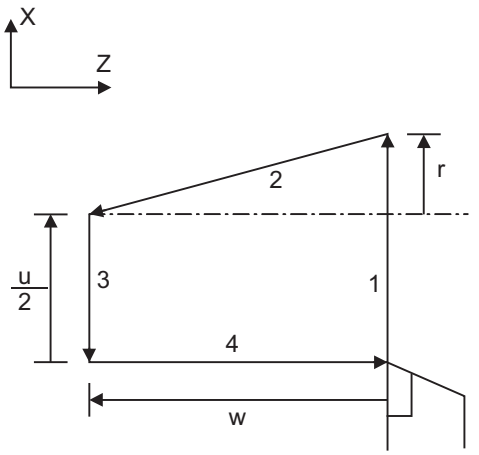


Program error (P191) will occur in (b) and (c) unless the following condition is satisfied.

$$|u / 2| \geq |r|$$

## 13.1.2 Thread Cutting Cycle; G78

### Function and purpose

Thread cutting cycle is a fixed cycle which performs straight and taper thread cutting.
The operation of thread cutting is same as the thread cutting command(G33).

### Command format

**Straight thread cutting**

```
G78 X/U__ Z/W__ F/E__ Q__ ;
```

| | |
|---|---|
| X/U | X axis end point coordinate (*1) |
| Z/W | Z axis end point coordinate (*1) |
| F/E | Lead of long axis (axis which moves most) direction |
| Q | Thread cutting start shift angle |

**Taper thread cutting**

```
G78 X/U__ Z/W__ R__ F/E__ Q__ ;
```

| | |
|---|---|
| X/U | X axis end point coordinate (*1) |
| Z/W | Z axis end point coordinate (*1) |
| R | Taper depth (radius designation, incremental position, sign required) |
| F/E | Lead of long axis (axis which moves most) direction |
| Q | Thread cutting start shift angle |

(*1) If the commanded axis and selected plane are different when the fixed cycle for turning machining is commanded, or if the movement amount is not specified in either or both of the selected plane axis commands, a program error (P114) will occur. Whether this is judged to be a program error depends on the MTB specifications (parameter "#1241 set13/bit4" ("fixed cycle for turning machining" selected-plane axis check disabled)).

## Detailed description

### Straight thread cutting

With a single block, the tool stops at the end points of operations 1, 3 and 4.

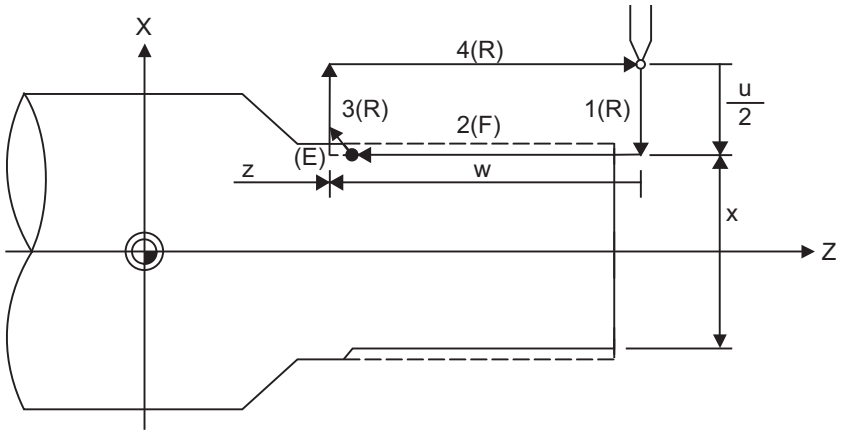


(R) Rapid traverse (F) Thread cutting cycle (E) End point coordinates

### Taper thread cutting

With a single block, the tool stops at the end points of operations 1, 3 and 4.

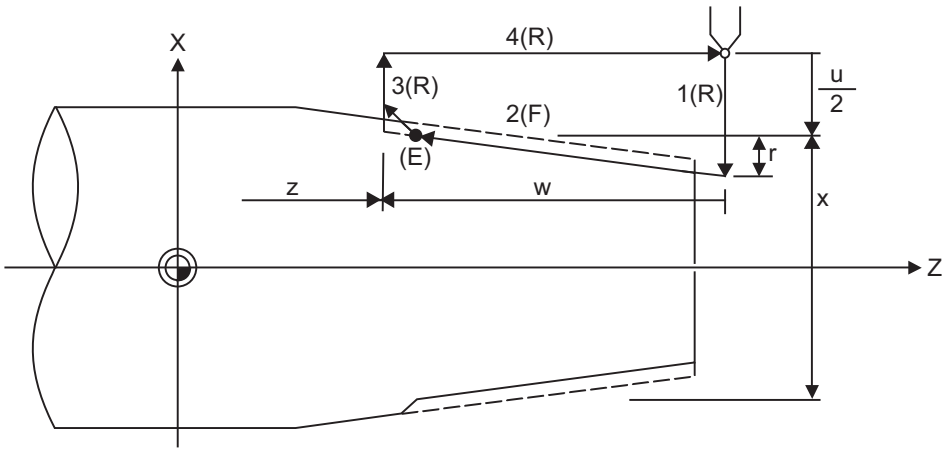


(R) Rapid traverse (F) Thread cutting cycle (E) End point coordinates

## Detailed description

(1) Details for chamfering

| | |
|---|---|
| 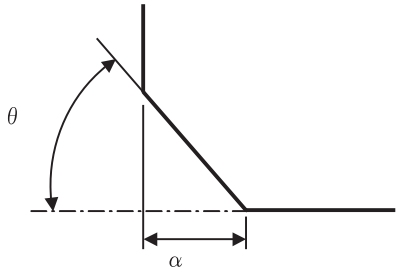 | α: Thread chamfering amount<br>This value is set in the parameter "#8014 CDZ-VALE". The available range is 0 to 12.7 leads. It can be set in 0.1L units.<br>Θ: Thread chamfering angle<br>This value is set in the parameter "#8015 CDZ-ANGLE". The setting range is 0 to 89°. It can be set in 1° units. |

If thread chamfering amount is bigger than a thread lead length, a program error(P192) will occur before starting thread cutting.

The operation in the thread cutting cycle when the result of the thread cutting tool retract with chamfering exceeds the cycle start point depends on the MTB specifications.

<#1270 ext06/bit4 = 0>
A program error (P192) will occur before thread cutting is started.

<#1270 ext06/bit4 = 1>
A program error (P192) will not occur. After the thread cutting tool retraction is stopped and the thread cutting block ends at the cycle start point ("A" in the figure), the axis moves to the end coordinate ("B" in the figure) at rapid traverse feed.

Thread cutting tool retraction when "#1270 ext06/bit4" is set to "1"

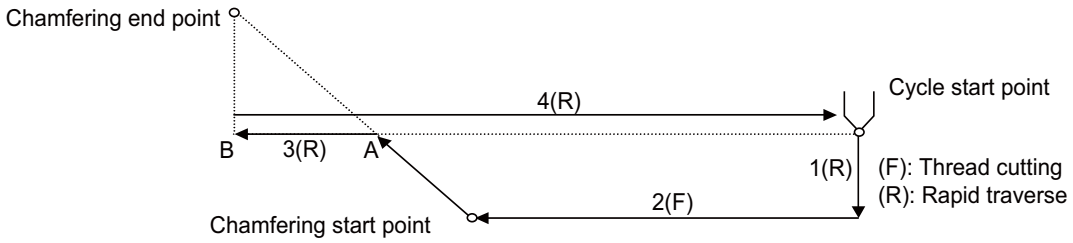


(2) When the feed hold is applied during the thread cutting cycle, automatic operation will stop if it is applied when thread cutting is not being executed or when a cutting command is issued but the axis is yet to move.
When the feed hold is applied during thread cutting, the thread cutting cycle retract is performed.

(3) Depending on the signs of u, w and r, the following shapes are created.

| (a) u < 0, w < 0, r < 0 | (b) u < 0, w < 0, r > 0 |
|---|---|
| 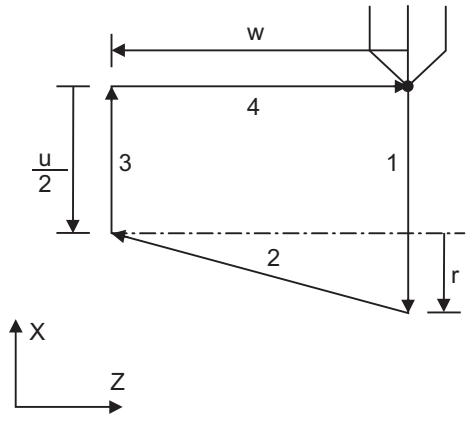  | 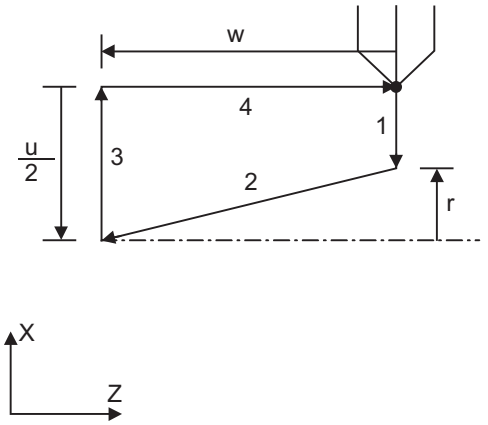  |
| **(c) u > 0, w < 0, r < 0** | **(d) u > 0, w < 0, r > 0** |
| 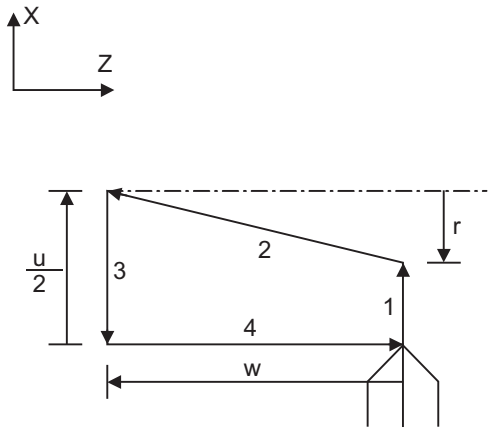  | 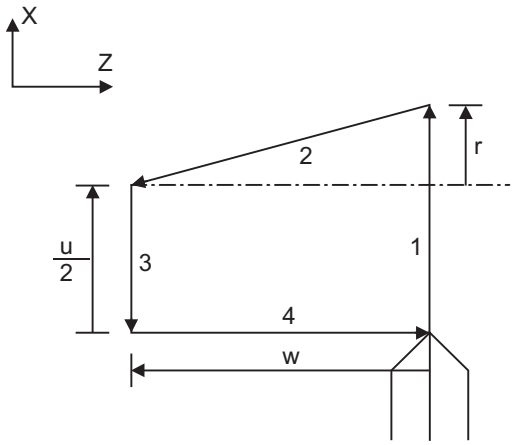  |

Program error (P191) will occur in (b) and (c) unless the following condition is satisfied.

$$|u / 2| \geq |r|$$

<Note>

- The thread cutting start shift angle is not modal. If there is no Q command with G78, this will be handled as "Q0".
- If a value exceeding "360.000" is commanded in G78 Q address, this will be handled as "Q360.000".
- G78 cuts one row with one cycle. To cut two rows, change the Q value, and issue the same command.
- Also, follow the precautions for the thread cutting command (G33).

## 13.1.3 Face Cutting Cycle; G79

### Function and purpose

The face cutting cycle performs continuous straight and taper cutting in the face direction.

### Command format

**Straight cutting**

```
G79 X/U__ Z/W__ F__ ;
```

| | |
|---|---|
| X/U | X axis end point coordinate (*1) |
| Z/W | Z axis end point coordinate (*1) |
| F | Feedrate |

**Taper cutting**

```
G79 X/U__ Z/W__ R__ F__ ;
```

| | |
|---|---|
| X/U | X axis end point coordinate (*1) |
| Z/W | Z axis end point coordinate (*1) |
| R | Taper depth (radius designation, incremental position, sign required) |
| F | Feedrate |

(*1) If the commanded axis and selected plane are different when the fixed cycle for turning machining is commanded, or if the movement amount is not specified in either or both of the selected plane axis commands, a program error (P114) will occur. Whether this is judged to be a program error depends on the MTB specifications (parameter "#1241 set13/bit4" ("fixed cycle for turning machining" selected-plane axis check disabled)).

## Detailed description

### Straight cutting

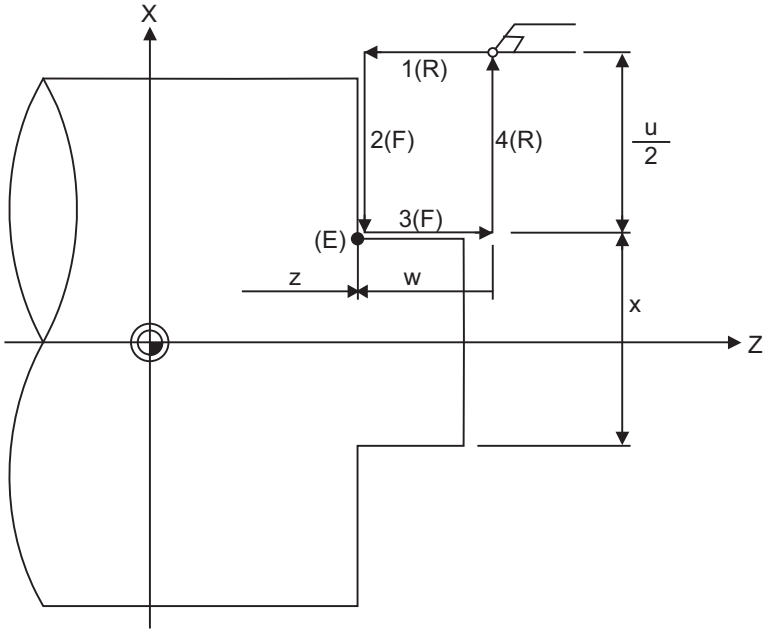


(R) Rapid traverse (F) Cutting feed (E) End point coordinates

### Taper cutting

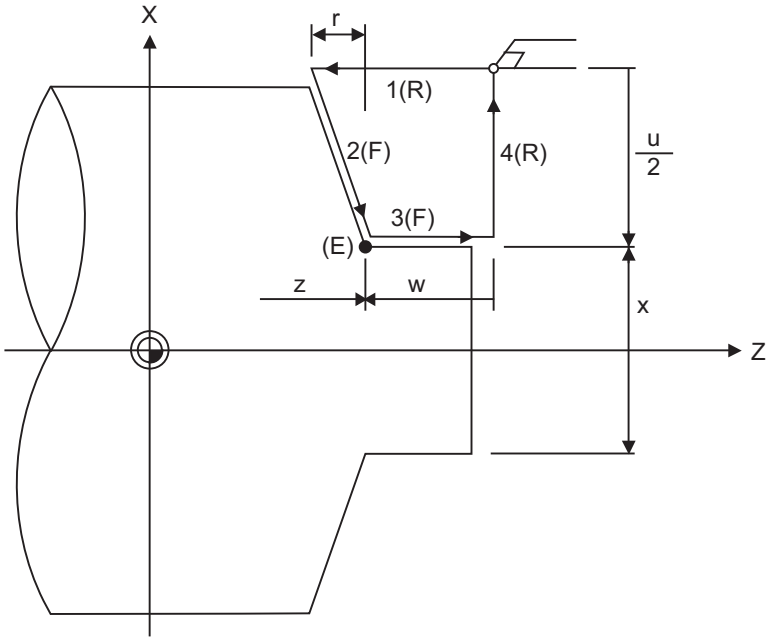


(R) Rapid traverse (F) Cutting feed (E) End point coordinates

## Detailed description

With a single block, the tool stops at the end points of operations 1, 2, 3 and 4 shown above.

Depending on the signs of u, w and r, the following shapes are created.

| (a) u < 0, w < 0, r < 0 | (b) u < 0, w < 0, r > 0 |
|---|---|
| 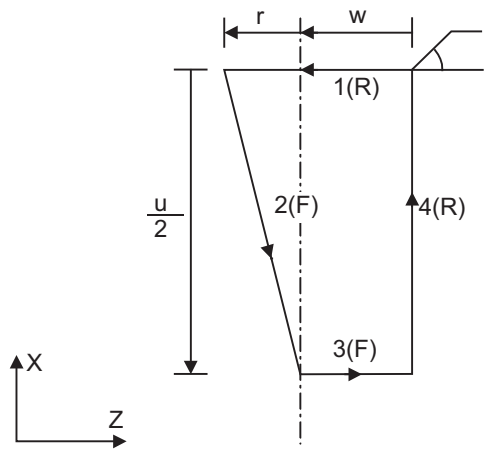 | 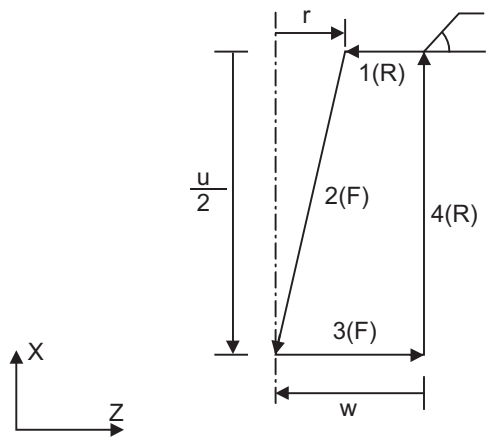 |
| (c) u > 0, w < 0, r < 0 | (d) u > 0, w < 0, r > 0 |
| 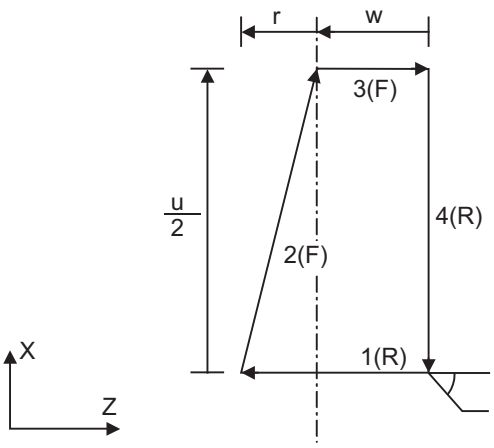 | 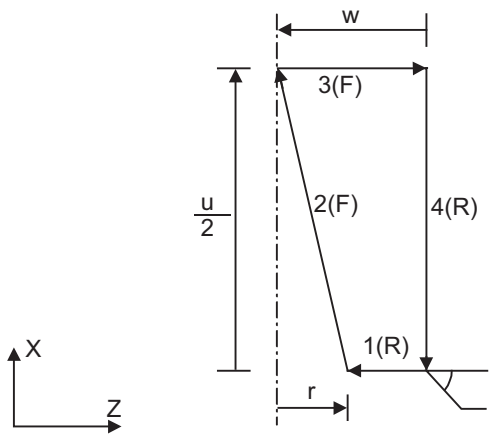 |

Program error (P191) will occur in (b) and (c) unless the following condition is satisfied.

$|w| \geq |r|$

# 13.2 Fixed Cycles for Turning Machining (MITSUBISHI CNC Special Format) ; G77, G78, G79

## Function and purpose

When performing rough cutting and other cutting by turning machining, fixed cycles are effective in simplifying machining programs. The whole commands can be performed in a single block, which normally requires several blocks. When using the MITSUBISHI CNC special format ("#1265 ext01/bit1" is "1"), some addresses differ from the normal format. This section gives details on the formats different from the normal ones.
Refer to section "13.1 Fixed Cycle for Turning Machining" for details regarding the fixed cycle for turning machining.

## Command format

### Longitudinal cutting cycle

```
G77  X/U__  Z/W__  I__  F__ ;
```

| | |
|---|---|
| X/U | X axis end point coordinate (*1) |
| Z/W | Z axis end point coordinate (*1) |
| I | Taper depth (radius designation, incremental position, sign required) |
| F | Feedrate |

### Thread cutting cycle

```
G78 X/U__ Z/W__ I__ F/E__ Q__ ;
```

| | |
|---|---|
| X/U | X axis end point coordinate (*1) |
| Z/W | Z axis end point coordinate (*1) |
| I | Taper depth (radius designation, incremental position, sign required) |
| F/E | Lead of long axis (axis which moves most) direction |
| Q | Thread cutting start shift angle |

### Face cutting cycle

```
G79 X/U__ Z/W__K_ F__ ;
```

| | |
|---|---|
| X/U | X axis end point coordinate (*1) |
| Z/W | Z axis end point coordinate (*1) |
| K | Taper depth (radius designation, incremental position, sign required) |
| F | Feedrate |

(*1) If the commanded axis and selected plane are different when the fixed cycle for turning machining is commanded, or if the movement amount is not specified in either or both of the selected plane axis commands, a program error (P114) will occur. Whether this is judged to be a program error depends on the MTB specifications (parameter "#1241 set13/bit4" ("fixed cycle for turning machining" selected-plane axis check disabled)).

## Detailed description

(1) Comparison of MITSUBISHI CNC special format and normal format
Some addresses in the MITSUBISHI CNC special format differ from the normal format.

| Function | MITSUBISHI CNC special format | Normal format | Difference from normal format |
|---|---|---|---|
| Longitudinal cutting cycle | G77 X Z I F;<br>or<br>G77 U W I F; | G77 X Z R F;<br>or<br>G77 U W R F; | Taper depth<br>Designate with R->I |
| Thread cutting cycle | G78 X Z I F;<br>or<br>G78 U W I F; | G78 X Z R F;<br>or<br>G78 U W R F; | Taper depth<br>Designate with R->I |
| Face cutting cycle | G79 X Z K F;<br>or<br>G79 U W K F; | G79 X Z R F;<br>or<br>G79 U W R F; | Taper depth<br>Designate with R->K |

# 13.3 Compound Type Fixed Cycle for Turning Machining

## Function and purpose

This function enables to perform a prepared fixed cycle by commanding a program in a block.
The types of fixed cycles are listed below.

| G code | Function | |
|---|---|---|
| G70 | Finishing cycle | Compound type fixed cycle for turning machining I |
| G71 | Longitudinal rough cutting cycle (finished shape chamfering) | |
| G72 | Face rough cutting cycle (finished shape chamfering) | |
| G73 | Formed material rough cutting cycle | |
| G74 | Face cut-off cycle | Compound type fixed cycle for turning machining II |
| G75 | Longitudinal cut-off cycle | |
| G76 | Compound type thread cutting cycle | |

The compound type fixed cycle for turning machining I (G70 to G73) cannot be used if the finished shape program is not registered in the memory.

### Term

The following describes the meanings of the terms used in this chapter.

| Term | Meaning |
|---|---|
| Machining of open section | Machining from the face part (end face of a workpiece) |
| Machining of mid-section | Machining from the middle of the longitudinal part or end face of the workpiece |
| Roughing along finishing shape | Cutting along finishing shape which is performed at the end of G71 or G72 command. |
| Cutting-edge angle | Angle between the turning machined face and the cutting-edge |
| Side-cutting-edge angle | Angle between the turning machined face and the side-cutting-edge |
| End-cutting-edge angle | Angle between the turning machined face and the end-cutting-edge |

## 13.3.1 Longitudinal Rough Cutting Cycle; G71

### Function and purpose

This function calls the finished shape program and, while automatically calculating the tool path, performs rough cutting in the longitudinal direction.

### Command format

**Longitudinal rough cutting cycle**

| |
|---|
| **G71 Ud Re Hh ;**<br>**G71 Aa Pp Qq Uu Ww Ff Ss Tt ;** |

This fixed cycle requires two blocks.
However, when using a value set by a parameter, the first block can be omitted.

| | |
|---|---|
| Ud | Cutting amount (modal) ...Reversible parameter "#8051 G71 THICK" is also available for setting.<br>Unit: µm or 1/10000 inch (Radius value command) |
| Re | Retract amount (modal) ... Reversible parameter "#8052 G71 PULL UP" is also available for setting.<br>Unit: µm or 1/10000 inch (Radius value command) |
| Hh | Pocket machining (modal) ...Reversible parameter "#8110 G71/G72 POCKET" is also available for setting.<br>0: No pocket machining<br>1: Pocket machining |
| Aa | Finished shape program No. (Program being executed when omitted)<br>Use a parameter to specify a 4- or 8-digit program No. starting with O. |
| Pp | Finished shape start sequence No. (Head of program when omitted) |
| Qq | Finished shape end sequence No. (To the end of the program when omitted)<br>If M99 is commanded before Q, the program will end at M99 even if Q is commanded. |
| Uu | X axis direction finishing allowance (When omitted, X axis direction finishing allowance is handled as 0.)<br>Unit: µm or 1/10000 inch (Follows diameter/radius value command (#1019 dia).) |
| Ww | Z axis direction finishing allowance (When omitted, Z axis direction finishing allowance is handled as 0.)<br>Unit: µm or 1/10000 inch (Radius value command) |
| Ff | Cutting speed (When omitted, the cutting speed (modal) just before G71 will be applied) |
| Ss, Tt | Spindle command, tool command |

Refer to the following pages for details on the addresses.

| Example of a finished shape without pocket | Example of a finished shape with pocket |
|---|---|
| 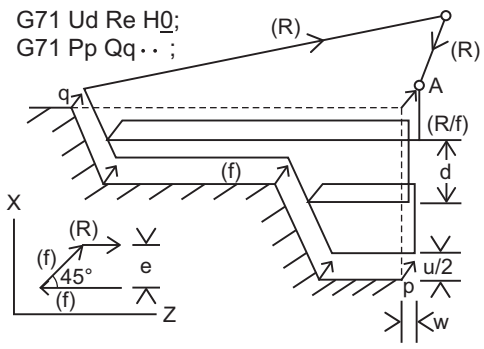 | 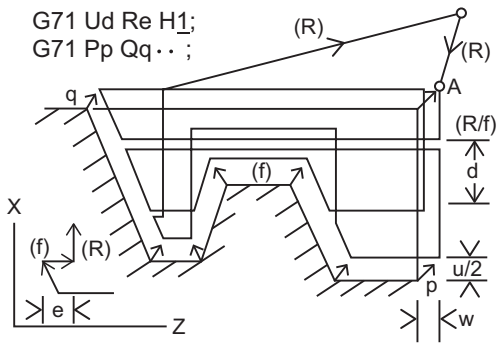 |





(R) Rapid traverse (f) Cutting feed A : Rough cutting start point

### Note

(1) A reversible parameter enables to use parameter setting value without issuing a program command and also, the value can be changed by the program command.

### Cutting amount: Ud

(1) Designate the cutting amount by Ud or parameter "#8051 G71 THICK".
Also, the amount can be changed for each cutting by setting the change amount of cutting (Δd) using the parameter "#8017 G71 DELTA-D".
A program error (P204) will occur for "d<Δd*2".

(2) When a cutting amount commanded in the program is deeper than the cutting depth of the finished shape, the response depends on the parameters set by the MTB.

Cutting amount designation (#1271 ext07/bit7)

<#1271 ext07/bit7=0>
If a cutting amount commanded in a program or parameter "#8051 G71 THICK" setting is deeper than the cutting depth of the finished shape, a program error (P204) will occur.

<#1271 ext07/bit7=1>
A program error will not occur even if a designated cutting amount is deeper than the cutting depth of the finished shape, and the rough cutting will be executed as one cut.
Note that a cutting amount must be between 0 and 99.999mm. A program error will occur if a value exceeds this range.

(3) At the end of the cutting, remaining part will be the cutting amount, but if this part is smaller than the value set in the parameter, roughing along finishing shape will be executed instead of cutting.

- Cutting amount (d):
  [Machining parameter] "#8051 G71 THICK" 0 to 99.999 mm
- Cutting change amount (Δd):
  [Machining parameter] "#8017 G71 DELTA-D" 0 to 99.999 mm
- Minimum cutting amount for final cut:
  [Machining parameter] "#8016 G71 MINIMUM" 0 to 99.999 mm

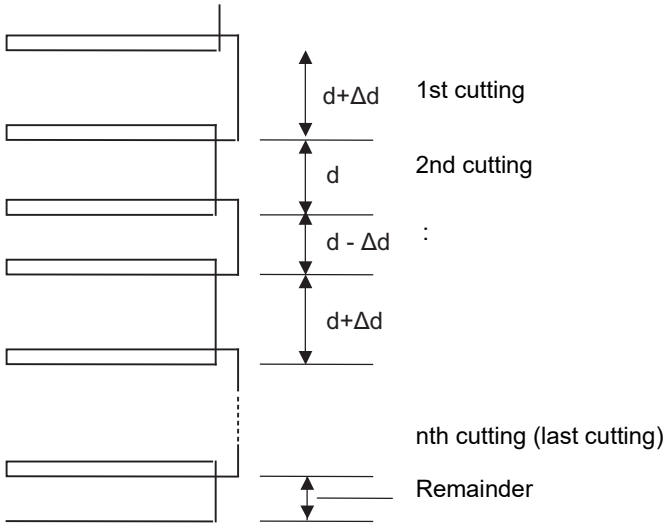

### Cutting method and retract amount: Re

(1) Designate the retract amount by Re or the parameter "#8052 G71 PULL UP" (0 to 99.999mm).

(2) The cutting method differs according to whether pocket machining is ON or OFF.

| | |
|---|---|
| Pocket machining OFF | Retracts in 45° direction in respect to workpiece |
| Pocket machining ON | Traces shape |

When the pocket machining is ON, cutting direction differs depending on "#1272 ext08/bit0" setting.

Cut-in amount designation [Base specification parameter] "#1272 ext08/bit0"

0: The pull up direction is Z axis direction when pocket machining is ON.
1: The pull up direction is X axis direction when pocket machining is ON.

However, when "#1272 ext08/bit0" is "1", pocket machining will be performed only when the first movement block after the finished shape start block, is designated to X and Z axes.

| #1272 ext08 | <When pocket machining is OFF> | <When pocket machining is ON> |
|---|---|---|
| bit0 = 0 | 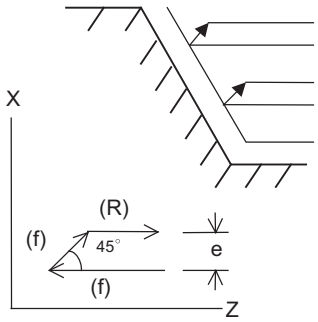 | 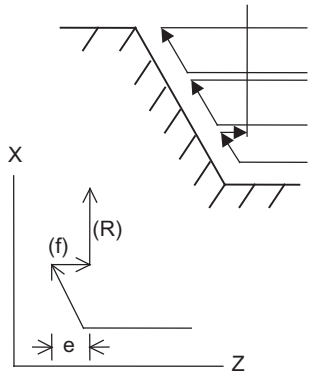 |
| bit0 = 1 | | 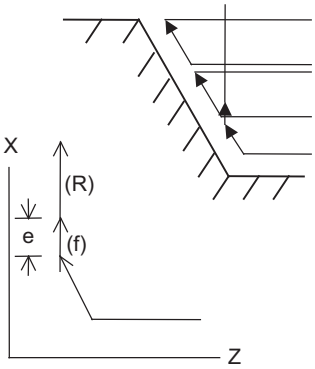 |

### Pocket machining: Hh

(1) Pocket machining ON/OFF can be set by Hh and a parameter.

#8110 G71/G72 POCKET

| | |
|---|---|
| 0 | Pocket machining is not performed.<br>Set this value only if the finishing shape has no recessed part (pocket).<br>In the cutting retract section, the tool is retracted at the direction of 45° with respect to the workpiece every cycle. Whether to perform roughing along finishing shape at the end depends on the parameter settings. |
| 1 | Pocket machining is performed.<br>This value can be set with or without a recessed part (pocket).<br>In the cutting retract section, the tool moves along the finishing shape every cycle. |

However, when "#1272 ext08/bit0" is "1", pocket machining will be performed only when the first movement block after the finished shape start block, is designated to X and Z axes.

### Finished shape start block and finished shape end block:Aa, Pp, Qq

Designate the finished shape start block and finished shape end block by Aa, Pp, Qq.
If calling a subprogram numbered with O is enabled, a program number starting with O and specified by A command value is called.
When A command value is less than the digit number set with parameter "#8129 subprogram number selection", increase the digit number of the command value by adding leading zeros.
In the following cases, a subprogram numbered without O and specified by A command value is called even when calling a subprogram numbered with O is enabled.

- The digit number of A command value is over the digit number of the program number set with parameter "#8129 subprogram number selection".
- A program starting with a commanded O No. does not exist.

If A command is omitted, program P, Q being executed will be applied.

When A command is omitted, program command P, Q being executed, will be applied. And when A command is omitted, the program will be executed in the order of G71 and then the program following Qq (finished shape end sequence No.)
A file name can be designated instead of address A by enclosing the file name in brackets <>. (The file name can have up to 32 characters including the extension.)
The maximum number of finished shape blocks is 200 including the blocks inserted with corner chamfer, corner rounding command and nose rounding command. A program error (P202) will occur if the numbers of blocks exceed the limit.

| <When pocket machining is OFF> | <When pocket machining is ON> |
|---|---|
| 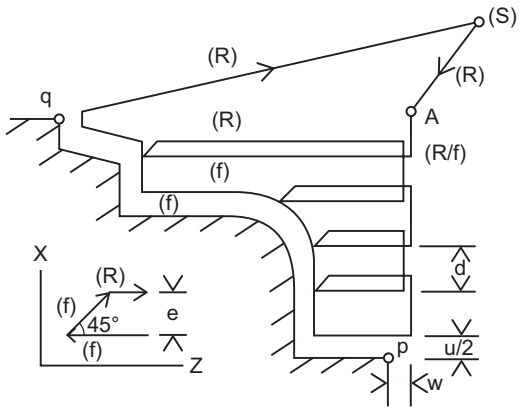 | 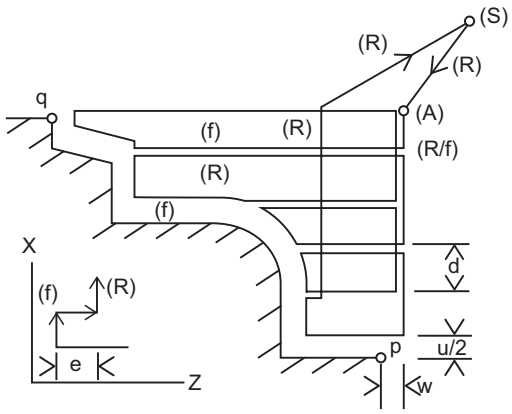 |





(R) Rapid traverse
(S) Cycle command point
(A) Rough cutting start point
(f) Cutting feed

<table>
<tr><th><When creating a finished shape program in a machining program other than the one currently being executed></th><th><When creating a finished shape program in a program currently being executed></th></tr>
<tr><td>G71 A__ P__ Q__<br>A: Finished shape program No.<br>P: Finished shape start sequence No. (From head of finished shape program when omitted)<br>Q: Finished shape end sequence No.<br>(To end of finished shape program or M99 when omitted)</td><td>G71 P__ Q__<br>P: Finished shape start sequence No.<br>Q: Finished shape end sequence No.</td></tr>
<tr><td>Program currently being executed<br>G00 X80.0 Z75.0 T0101; ←(a)<br>G71 U10. R3.; ←(b)<br>G71 A100 P10 Q20 U3. W1.5 F500 S1500; ←(c)<br>G70 A100 P10 Q20; ←(d)<br><br>Shape program<br>O100<br>G28 XZ;<br>N10 G00 X15.0 Z65.0;<br>G01 Z55. F450;<br>G01 X30.0;<br>G03 X40.0 Z50.0 R5.0;<br>:<br>G01 Z42.0;<br>G01 X50.0 Z35.0;<br>N20 G01 X60.0;<br>N30 G00 X13.0 Z68.0;</td><td>Program currently being executed<br>G00 X80.0 Z75.0 T0101; ← (a)<br>G71 U10. R3.; ← (b)<br>G71 P10 Q20 U3. W1.5 F500 S1500; ← (c)<br>N10 G00 X15.0 Z65.0;<br>G01 Z55. F450;<br>G01 X30.0;<br>G03 X40.0 Z50.0 R5.0;<br>G01 Z42.0;<br>G01 X50.0;<br>G01 X55.0 Z35.0;<br>N20 G01 X60.0;<br>G70 A100 P10 Q20; ← (d)</td></tr>
<tr><td>Program execution order: (a)(b)(c)(d)<br>(N10-N20: Finished shape program)</td><td>Program execution order: (a)(b)(c)(d)<br>(N10-N20: Finished shape program)</td></tr>
</table>

* G70 command: Finishing cycle
The workpiece is finished following the finishing program, and then the axis returns to the G70 command position.

### Finishing allowance: Uu, Ww

When the finishing allowance is designated, the Uu/Ww part will be left uncut from the finished shape.
X axis finishing allowance: The finishing allowance is left uncut in the rough cutting start point direction.

**<Finishing allowance when pocket machining is OFF or when machining an open section when pocket machining is ON>**
**(finished shape start block X axis is at base)**

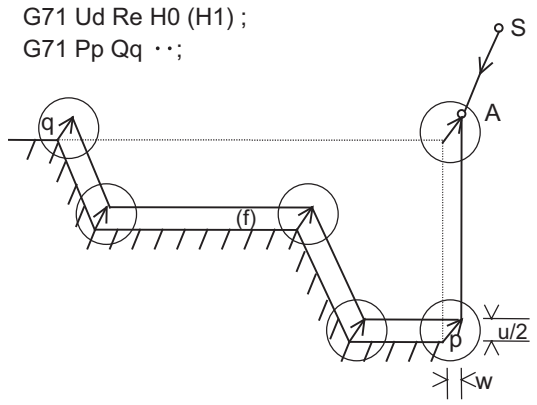


S : Cycle command point
A : Rough cutting start point
p : Finished shape start block
q : Finished shape end block

Z axis finishing allowance: The finishing allowance is left uncut in the rough cutting start point direction.
Note that if down cutting (block commanded in direction in which X axis faces hole base) is executed when pocket machining is ON and if cutting is started from the middle of the longitudinal direction, the Z axis finishing allowance direction will be reversed.

**<Finishing allowance of mid-section when pocket machining is ON>**
**(finished shape start block X axis = finished shape end block X axis)**

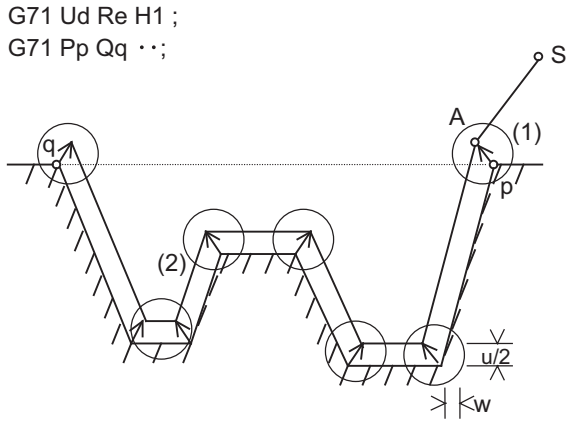


S : Cycle command point
A : Rough cutting start point
p : Finished shape start block
q : Finished shape end block

The block that starts cutting from the middle of the longitudinal direction will have a reversed Z axis finishing allowance direction. ((1) in the figure)

**Note**

(1) During tool nose R compensation, programming must be done so that the X axis positions of p and q after the tool nose R compensation will be the same value. (Refer to "Cutting shape" (5).)

The block that executes down cutting has a reversed Z axis finishing allowance direction. ((2) in the figure)

## Detailed description

### Validity of pocket machining

It is judged that there is a pocket section when down cutting (finished shape block in which previous movement block has no X axis movement command, or the X axis moves in the reverse direction of the hole base and then moves toward the hole base) is issued between the block following the finished shape start block and the end block.

**Note**

(1) During tool nose radius compensation, the validity of the pocket section is judged in respect to the finished shape after tool nose radius compensation.

(2) If the finished shape has a pocket, program the pocket in a way that causes no interference between the tool and workpiece.

### Machining of open section and machining of mid-section

The rough cutting cycle includes machining with one end of the workpiece is open, and machining which starts at a mid-section of a workpiece.
Machining of open section: Possible when pocket machining is either OFF or ON.
Machining of mid-section: Possible only when pocket machining is ON.
(Entire rough cutting cycle is handled as one pocket.)

| | #1271 ext07/bit5 = 0 | #1271 ext07/bit5 = 1 |
|---|---|---|
| **Open section** | 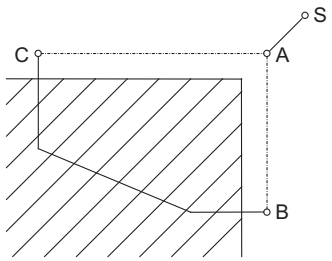 | 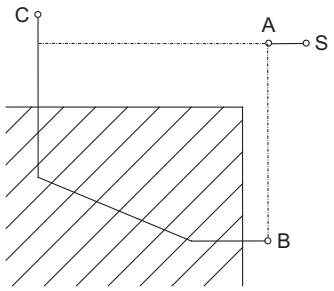 |
| **Mid-section** | 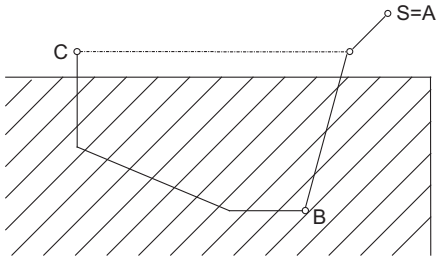 | 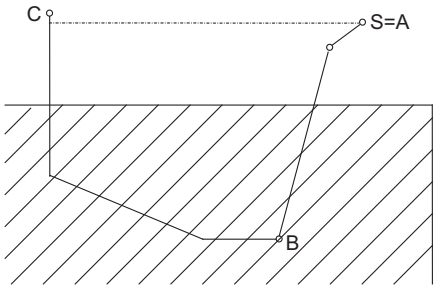 |

S : Cycle command point
A : Rough cutting start point
B : Finished shape start block
C : Finished shape end block

**Note**

(1) #1271 ext07/bit5: Selection of cut start position
0: Determined by finished shape program
1: Determined by cycle start point

## Rough cutting direction

**<Rough cutting direction when pocket machining is OFF>**

[Automatically determine according to finished shape (#1273 ext09/bit2=0)]

The rough cutting direction is determined in the following manner according to the finished shape.

| | |
|---|---|
| X axis of C (finished shape end block) > X axis of B (finished shape start block) | (1) or (2) |
| X axis of C (finished shape end block) < X axis of B (finished shape start block) | (3) or (4) |
| Z axis of C (finished shape end block) > Z axis of B (finished shape start block) | (2) or (3) |
| Z axis of C (finished shape end block) < Z axis of B (finished shape start block) | (1) or (4) |

A program error (P203) will occur if any of the following conditions is met:
- X axis of C (finished shape end block) = X axis of B (finished shape start block)
- Z axis of C (finished shape end block) = Z axis of B (finished shape start block)

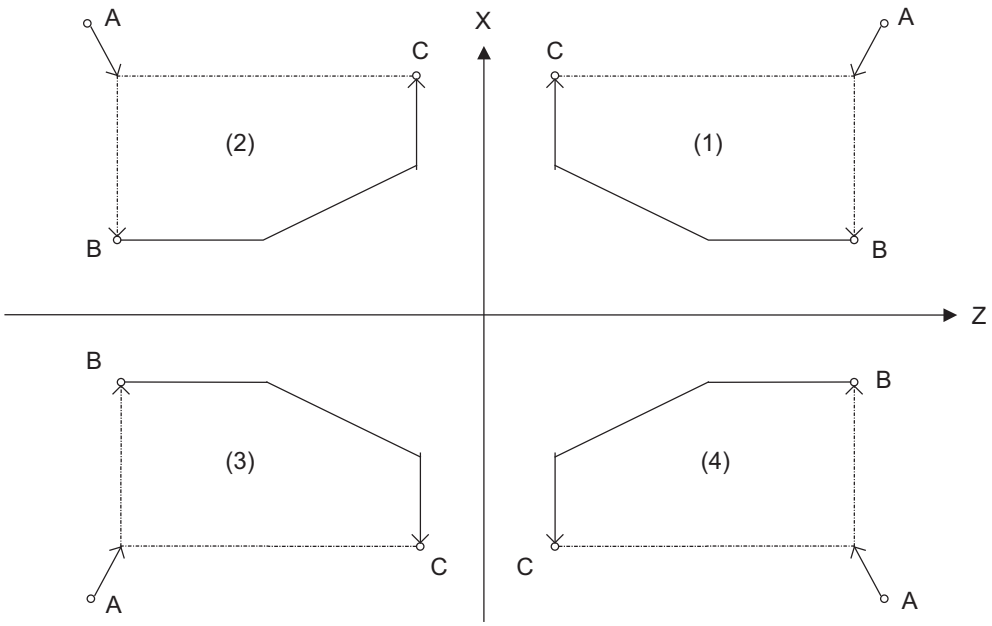


A : G71 cycle command point
B : Finished shape start block
C : Finished shape end block

The finished shape program is A → B → C.

[Designate with program (#1273 ext09/bit2=1)]

The finishing allowance direction follows the sign of the finishing allowance designated in the program.

**<Rough cutting direction when pocket machining is ON>**

Select one of the followings.

[Automatically determine according to finished shape (#1273 ext09/bit2=0)]

The rough cutting direction is determined in the following manner according to the finished shape.

| | |
|---|---|
| X axis of A (G71 cycle command point) > X axis of B (finished shape start block), and<br>X axis of B (finished shape start block) <= X axis of C (finished shape end block) | (1) or (2) |
| X axis of A (G71 cycle command point) < X axis of B (finished shape start block), and<br>X axis of B (finished shape start block) >= X axis of C (finished shape end block) | (3) or (4) |
| Z axis of C (finished shape end block) > Z axis of B (finished shape start block) | (2) or (3) |
| Z axis of C (finished shape end block) < Z axis of B (finished shape start block) | (1) or (4) |

- A program error (P203) will occur if Z axis of C (finished shape end block) = Z axis of B (finished shape start block).
- When setting the B point X axis as the base, the method is the same as the "<Rough cutting direction when pocket machining is OFF>".

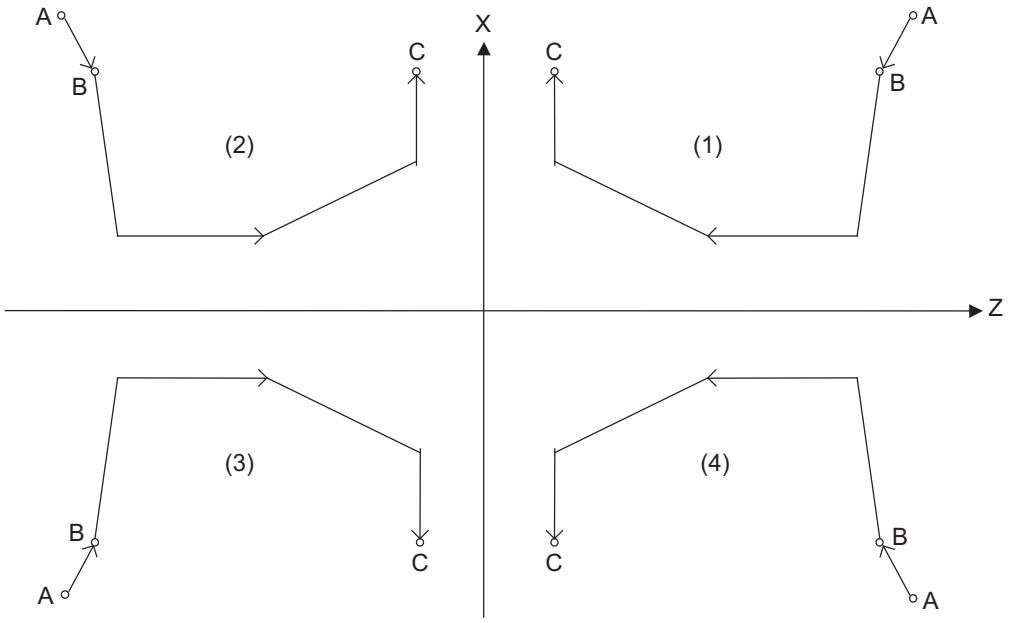


A : G71 cycle command point

B : Finished shape start block

C : Finished shape end block

The finished shape program is A → B → C.

[Designate with program (#1273 ext09/bit2=1)]

The finishing allowance direction follows the sign of the finishing allowance designated in the program.

## Finished shape

Cut start position (#1271 ext07/bit5)

The cut start position is calculated from the final position of the finished shape program; however, this can be changed to the cycle start point.

<#1271 ext07/bit5 = 0>

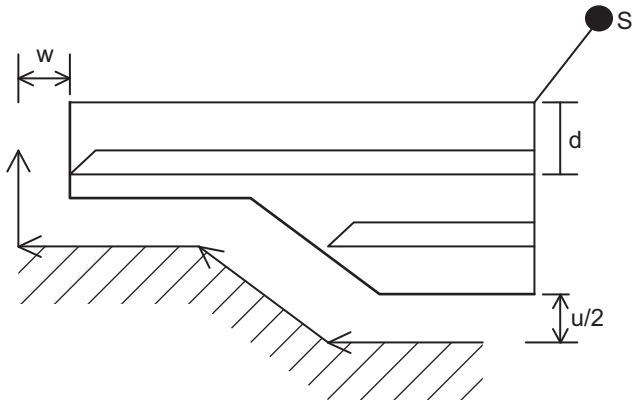


<#1271 ext07/bit5 = 1>

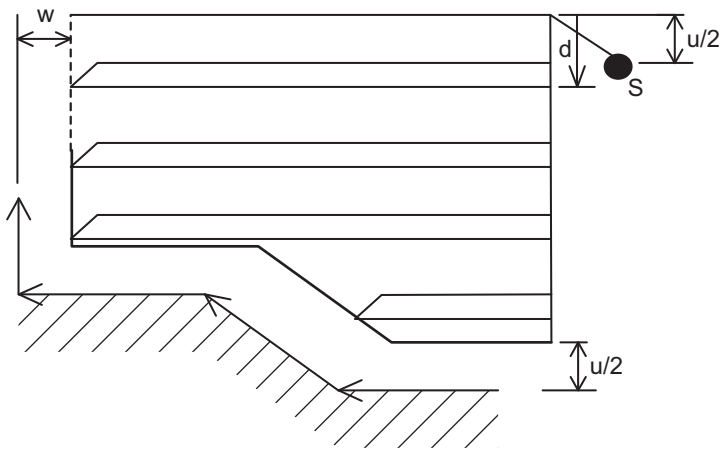


S : Cycle start point

u/2, w : Finishing allowance

d : First cut

**<Finished shape in Z axis direction when pocket machining is OFF>**

The Z axis direction finishing allowance must be based on monotonous changes (increment only or decrement only). The program error (P203) occurs if the shape is illegal.

| <Example of illegal Z axis direction when pocket machining is OFF> | |
|---|---|
| Z axis direction reverses (program error (P203)) | Z axis direction reverses at middle of arc (program error (P203)) |
| 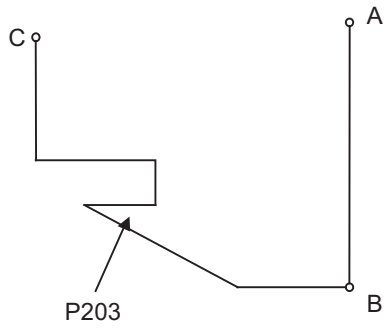  | 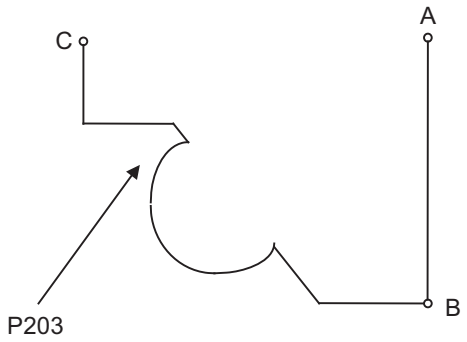  |

**<Finished shape in X axis direction when pocket machining is OFF>**

As a principle, the finishing allowance in the X axis direction must change monotonously (increment or decrement). At sections that do not change monotonously, the rough cutting cycle is not executed at the indent section (pocket), but the finishing allowance is traced as commanded. When programming, be aware that if the pocket's X axis depth is not less than the cut depth, the cutting load increases at the pocket section.

| <Example of illegal X axis direction when pocket machining is OFF> | |
|---|---|
| Smaller than cut depth "d" (Program error (P203)) | There is a pocket when pocket machining is OFF.<br>(An error does not occur, but the pocket section is cut roughly with one cut.) |
| 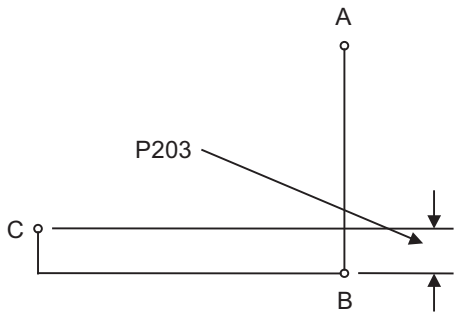  | 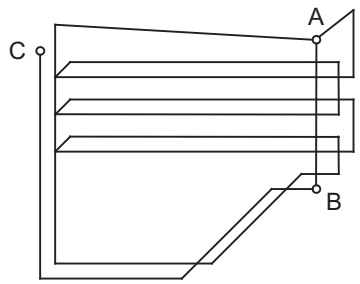  |

A : Cycle command point

B : Finished shape start block

C : Finished shape end block

**<Finished shape in Z axis direction when pocket machining is ON>**

The finishing allowance on Z direction must always change monotonously (only increment or only decrement). Sections that do not change monotonously will have a finished shape with a cover.

| <Example of section where Z axis direction does not change monotonously when pocket machining is ON> | |
|---|---|
| The Z axis direction reverses, so the shaded section is covered to create a finished shape. (The shaded section is not cut.) | The Z axis direction reverses in the middle of the arc, so the shaded section is covered to create a finished shape. (The shaded section is not cut.) |
| 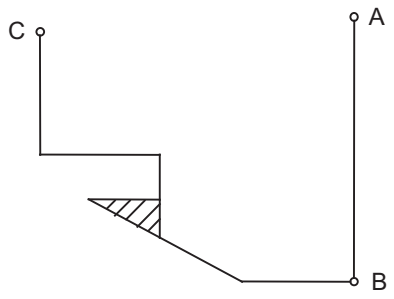  | 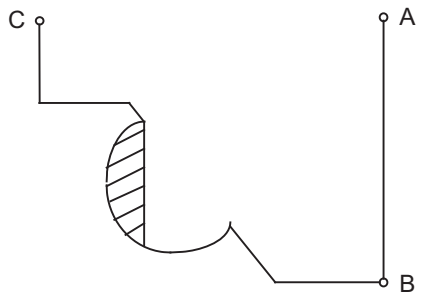  |

A : Cycle command point

B : Finished shape start block

C : Finished shape end block

**<Finished shape in X axis direction when pocket machining is ON>**

As a principle, the finished shape in the X axis direction must change monotonously (increment or decrement). During pocket machining, the block in the middle of finishing must not exceed the X axis position of C (finished shape end block).

If it does, the program error (P203) occurs.

| <Example of illegal X axis direction when pocket machining is ON> | |
|---|---|
| Smaller than cut depth "d" (Program error (P203)) | Block in the middle of finishing is higher than finished end point block (Program error (P203)) |
| 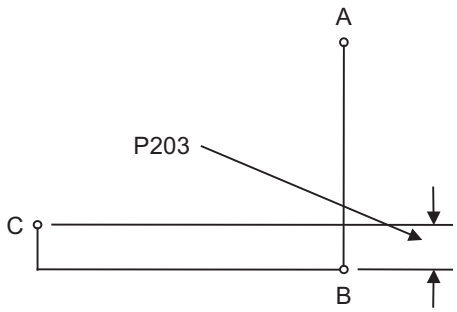  | 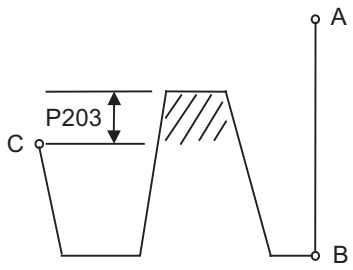  |

A : Cycle command point

B : Finished shape start block

C : Finished shape end block

### Finished shape during tool nose R compensation

Selection of tool nose R compensation (#1271 ext07/bit6)

**<#1271 ext07/bit6=0>**

If there is a G71 command during tool nose R compensation, the G71 cycle command point will be the position where the tool nose R compensation is temporarily canceled. The finished shape is created with the tool nose R compensation applied.

<Example of tool nose No. 3 (pocket machining OFF) ... Machining of open section>

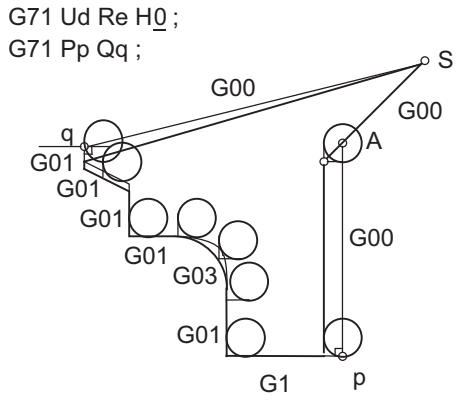


S : Cycle command point A : Rough cutting start point

<Example of tool nose No. 8 (pocket machining ON) ... Machining of intermediate section>

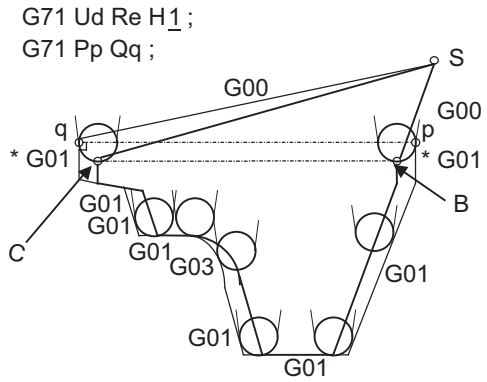


S : Cycle command point B : Finished shape start block after nose R compensation
C : Finished shape end block after nose R compensation

**Note**

(1) To machine an intermediate section while pocket machining is ON, program so that the X axis position of the finished shape start block and the X axis position of the finished shape end block are the same after the tool nose R compensation is applied.

Precautions for machining intermediate section

The intermediate section is machined when the X axis position of the finished shape start block and the X axis position of the finished shape end block are the same after the tool nose R compensation.
Program so that only the X axis moves (distance greater than or equal to the nose R diameter) in the blocks marked with "*" in the above figure.

**<#1271 ext07/bit6=1>**

Rough cutting is performed according to a finished shape program without the tool nose R compensation.

## Roughing along finishing shape

**<When pocket machining is OFF>**

When the parameter "#19437 Skip fin in rough1" is set to "0", roughing along finishing shape is performed.

When the parameter "#19437 Skip fin in rough1" is set to "1", the tool moves to the cycle command point in rapid traverse without roughing along finishing shape.

| When roughing along finishing shape is performed (#19437 is set to "0") | When roughing along finishing shape is not performed (#19437 is set to "1") |
|---|---|
| 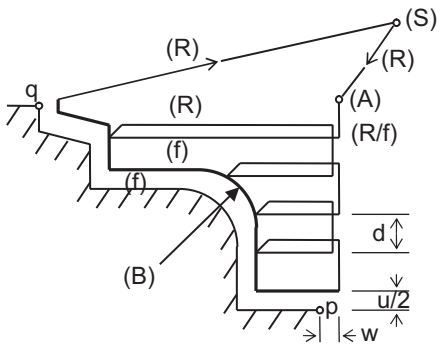 | 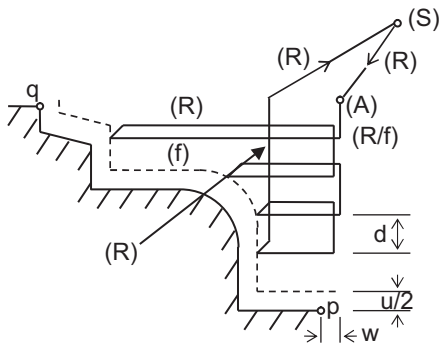 |





(S) Cycle command point
(A) Rough cutting start point
(B) Roughing along finishing shape
(R) Rapid traverse
(f) Cutting feed

**<When pocket machining is ON>**

When the parameter "#19438 Fin in rough2" is set to "0", the tool moves to the cycle command point in rapid traverse without roughing along finishing shape.

When the parameter "#19438 Fin in rough2" is set to "1", roughing along finishing shape is performed.

| When roughing along finishing shape is performed (#19438 is set to "0") | When roughing along finishing shape is not performed (#19438 is set to "1") |
|---|---|
| 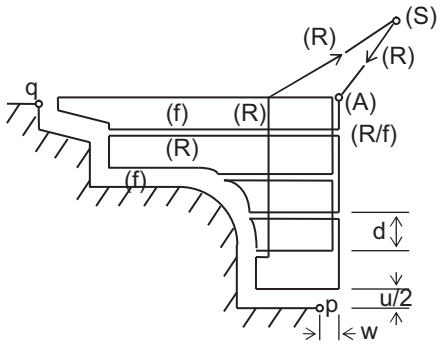 | 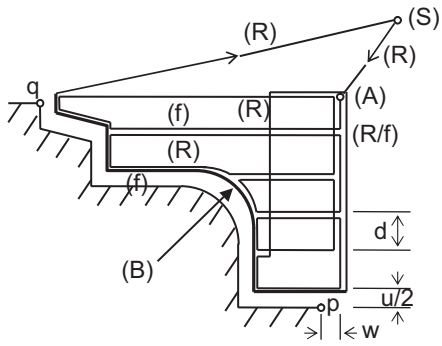 |





(S) Cycle command point
(A) Rough cutting start point
(B) Roughing along finishing shape
(R) Rapid traverse
(f) Cutting feed

### Note

(1) The cut start position is calculated from the final position of the finishing shape program, but this can be changed to the cycle start point (#1271 ext07/bit5).
When roughing along finishing shape is performed, make sure that the block in the middle of the finishing shape processing does not exceed the X axis position of the block with the finishing shape ended, or the block in finishing shape processing does not exceed the X axis position of the cycle command point. If the tool moves to the cycle command point after roughing along the finishing shape is performed, it may interfere with the workpiece.

### Path after roughing along finishing shape

After roughing along finishing shape is completed, the operation varies depending on the parameter setting. When the parameter "#19442 Path at G71 comp." is set to "0", the tool moves to the cycle command point without going through the rough cutting start point.

When the parameter "#19442 Path at G71 comp." is set to "1", the operation varies depending on the setting of the parameter "#19443 Retract aft rough".

When the parameter "#19443 Retract aft rough" is set to "0", the tool moves to the cycle command point after moving to the rough cutting start point.

When the parameter "#19443 Retract aft rough" is set to "1", the tool escapes after roughing along the finishing shape, and moves to the rough cutting start point in the order of Z axis and X axis. After this, the tool moves to the cycle command point.

To escape after roughing along the finishing shape, pull the tool by the same amount as the cut depth in the 45° direction with respect to the workpiece.

| #19443 | #19442 | |
|---|---|---|
| | 0 | 1 |
| 0 | When the tool does not go through the rough cutting start point: 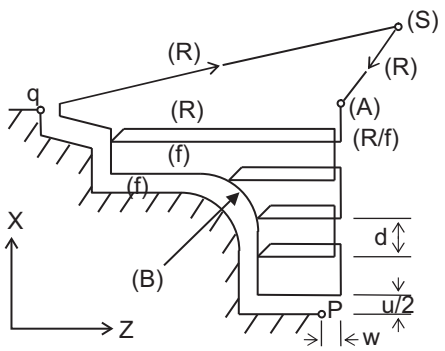  | When the tool goes through the rough cutting start point: 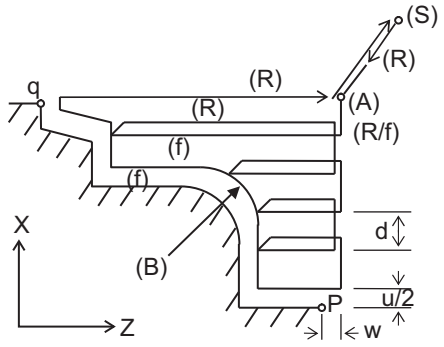  |
| 1 | | When the tool escapes: 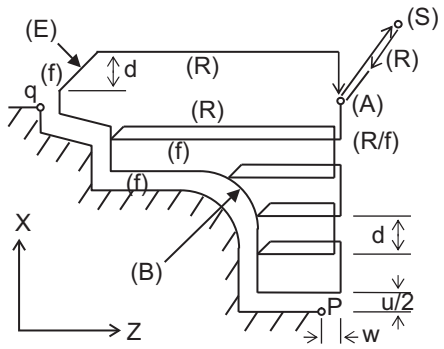  |

(S) Cycle command point
(A) Rough cutting start point
(B) Roughing along finishing shape
(E) Escape
(R) Rapid traverse
(f) Cutting feed

While the parameter "#19442 Path at G71 comp." is set to "0", if the cycle command point is lower than the end point of the finishing shape, the tool may interfere with the workpiece when moving to the cycle command point after roughing along the finishing shape.

By setting the parameter "#19442 Path at G71 comp." to "1", it is possible to prevent the tool from interfering with the workpiece when moving to the cycle command point after roughing along the finishing shape.

| Example where the tool interferes with the workpiece (#19442 is set to "0") | Example where the tool does not interferes with the workpiece (#19442 is set to "1" and #19443 is set to "0") |
|---|---|
| 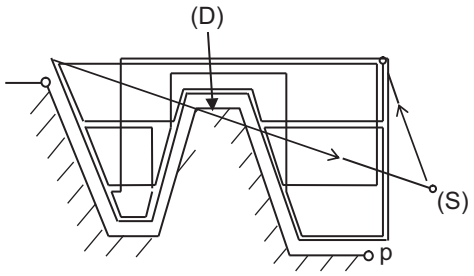  | 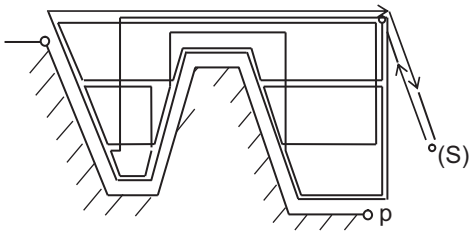  |

(S) Cycle command point

(D) Interfering with the workpiece

When the tool does not move in the X axis direction in the final block of the finishing shape, even if the parameter "#19442 Path at G71 comp." is set to "1", the finished surface may be damaged when the tool moves to the rough cutting start point after roughing along the finishing shape. In such a case, set the parameter "#19443 Retract aft rough" to "1" to escape the tool after roughing along the finishing shape. That way, the finished surface will not be damaged.

| Example in which the finished surface is damaged (#19442 is set to "1" and #19443 is set to "0") | Example in which the finished surface is not damaged (#19442 is set to "1" and #19443 is set to "1") |
|---|---|
| 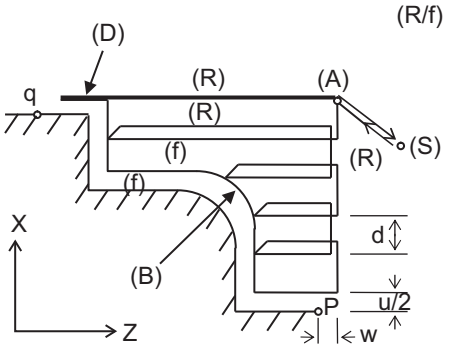  | 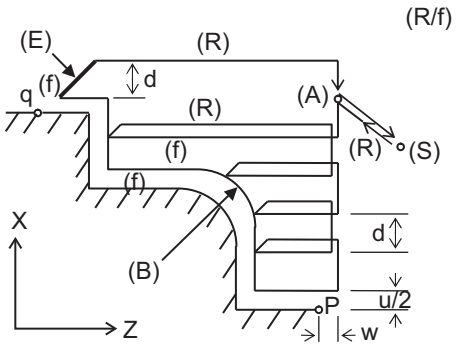  |

(S) Cycle command point

(A) Rough cutting start point

(B) Roughing along finishing shape

(D) Damaged

(E) Escape

(R) Rapid traverse

(f) Cutting feed

## Program example

**Machining of open section (example with pocket machining OFF)**

```
G00 X80.0 Z75.0 T0101;          (1)
G71 U10. R3. H0;                (2)
G71 P10 Q20 U3.W1.5 F500 S1500; (3)
N10 G00 X15.0 Z65.0;
G01 Z55. F450;
G01 X30.0;
G03 X40.0 Z50.0 R5.0;
G01 Z42.0;
G01 X50.0;
G01 X55.0 Z35.0;
N20 G01 X60.0;
G70 P10 Q20;                    (4)

Program execution order (1)(2)(3)(4)
(N10 to N20: Finishing program)
```

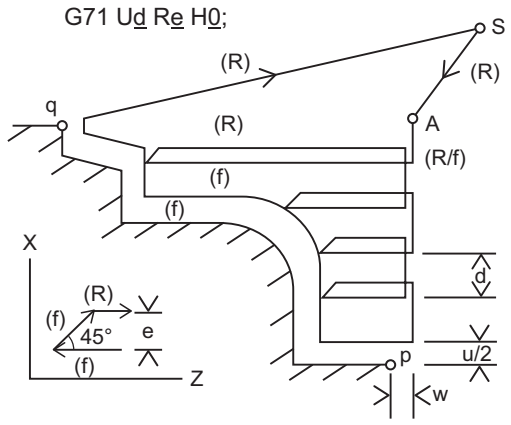


**Machining of open section (example with pocket machining ON)**

```
G00 X80.0 Z75.0 T0101;          (1)
G71 U10. R3. H1;                (2)
G71 P10 Q20 U3.W1.5 F500 S1500; (3)
N10 G00 X15.0 Z65.0;
G01 Z55. F450;
G01 X30.0;
G03 X40.0 Z50.0 R5.0;
G01 Z42.0;
G01 X50.0;
G01 X55.0 Z35.0;
N20 G01 X60.0;
G70 P10 Q20;                    (4)

Program execution order (1)(2)(3)(4)
(N10 to N20: Finishing program)
```

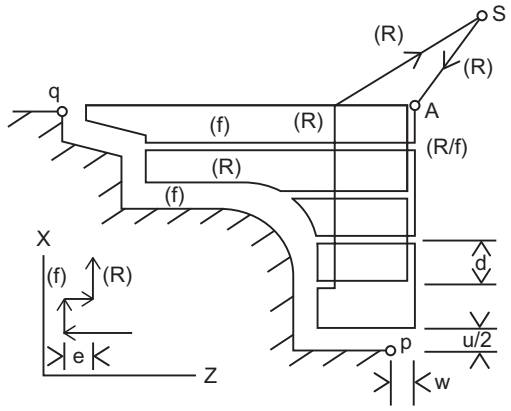

**Machining of mid-section (example with pocket machining ON)**

```
G00 X80.0 Z75.0 T0101;          (1)
G71 U10. R3. H1;                (2)
G71 P10 Q20 U3.W1.5 F500 S1500; (3)
N10 G00 X60.0 Z73.0;
G01 X15.0 Z65.0;
G01 Z55. F450;
G01 X30.0;
G03 X40.0 Z50.0 R5.0;
G01 Z42.0;
G01 X50.0;
G01 X55.0 Z35.0;
N20 G01 X60.0;
G70 P10 Q20;                    (4)

Program execution order (1)(2)(3)(4)
(N10 to N20: Finishing program)
```

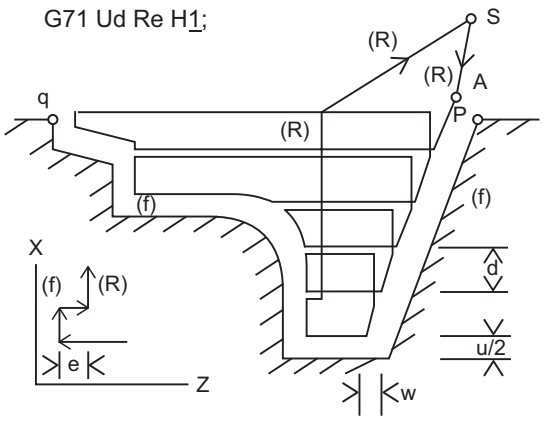


S : Cycle command point
A : Rough cutting start point
(R) Rapid traverse
(f) Cutting feed

## Precautions

Refer to "13.3.10 Precautions for Compound Type Fixed Cycle for Turning Machining (G70 to G76)".

## 13.3.2 Face Rough Cutting Cycle; G72

### Function and purpose

This function calls the finished shape program and, while automatically calculating the tool path, performs rough cutting in the face direction.

### Command format

**Face rough cutting cycle**

```
G72 Wd Re Hh ;
G72 Ae Pp Qq Uu Ww Ff Ss Tt ;
```

This fixed cycle requires two blocks.
However, when using a value set by a parameter, the first block can be omitted.

| | |
|---|---|
| Wd | Cut amount (modal) (Reversible parameter "#8051 G71 THICK" is also available for setting.)<br>Unit: µm or 1/10000 inch (Radius value command) |
| Re | Retract amount (modal) (Reversible parameter "#8052 G71 PULL UP" is also available for setting.)<br>Unit: µm or 1/10000 inch (Radius value command) |
| Hh | Pocket machining (modal) (Reversible parameter "#8110 G71/G72 POCKET" is also available for setting)<br>0: No pocket machining<br>1: Pocket machining |
| Aa | Finished shape program No. (Program being executed when omitted)<br>Use a parameter to specify a 4- or 8-digit program No. starting with O. |
| Pp | Finished shape start sequence No. (Head of program when omitted) |
| Qq | Finished shape end sequence No. (To the end of the program when omitted)<br>If M99 is commanded before Q, the program will end at M99 even if Q is commanded. |
| Uu | X axis direction finishing allowance (When omitted, X axis direction finishing allowance is handled as 0.)<br>Unit: µm or 1/10000 inch (Follows diameter/radius value command (#1019 dia).) |
| Ww | Z axis direction finishing allowance (When omitted, Z axis direction finishing allowance is handled as 0.)<br>Unit: µm or 1/10000 inch (Radius value command) |
| Ff | Cutting speed (When omitted, the cutting speed (modal) just before G72 will be applied) |
| Ss, Tt | Spindle command, tool command |

Also refer to "13.3.1 Longitudinal Rough Cutting Cycle; G71" for details on each address.

| Example of a finished shape without pocket | Example of a finished shape with pocket |
|---|---|
| G72 Wd Re H0;<br>G72 Pp Qq・・; | G72 Wd Re H1;<br>G72 Pp Qq・・; |

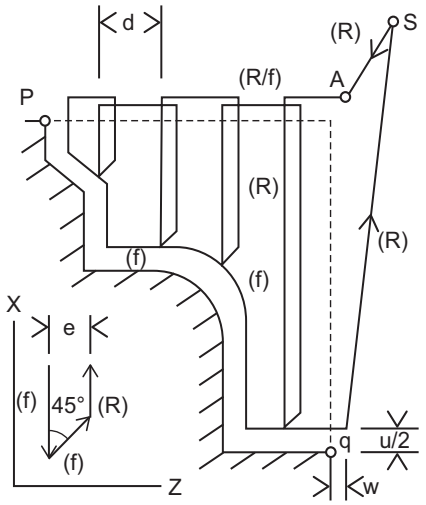


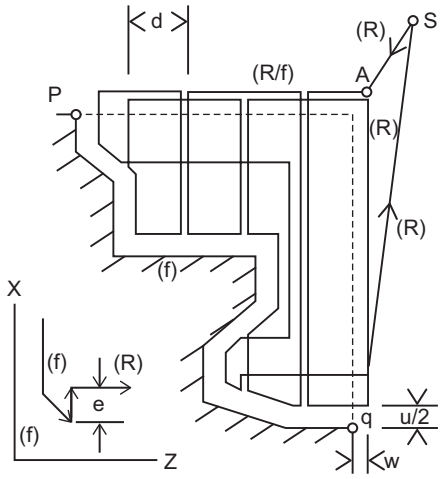


S : Cycle command point
(R) Rapid traverse
A : Rough cutting start point
(f) Cutting feed

**Note**

(1) A reversible parameter enables to use parameter setting value without issuing a program command and also, the value can be changed by the program command.

## Detailed description

Refer to "13.3.1 Longitudinal Rough Cutting Cycle; G71" for details of the functions.

## Precautions

Refer to "13.3.10 Precautions for Compound Type Fixed Cycle for Turning Machining (G70 to G76)".

## 13.3.3 Formed Material Rough Cutting Cycle; G73

### Function and purpose

This function calls the finished shape program, automatically calculates the tool path and performs rough cutting while cutting the workpiece into the finished shape.

### Command format

**Formed material rough cutting cycle**

```
G73 Ui Wk Rd ;
G73 Aa Pp Qq Uu Ww Ff Ss Tt ;
```

This fixed cycle requires two blocks.

| | |
|---|---|
| Ui | X axis direction cutting allowance<br>Unit: µm or 1/10000 inch (Radius value command) |
| Wk | Z axis direction cutting allowance<br>Unit: µm or 1/10000 inch (Radius value command) |
| Rd | Number of divisions |
| Aa | Finished shape program No. (Program being executed when omitted)<br>Use a parameter to specify a 4- or 8-digit finished shape program No. starting with O. |
| Pp | Finished shape start sequence No. (program head when omitted) |
| Qq | Finished shape end sequence No. (To the end of the program when omitted)<br>If M99 is commanded before Q, the program will end at M99 even if Q is commanded. |
| Uu | X axis direction finishing allowance (When omitted, X axis direction finishing allowance is handled as 0.)<br>Unit: µm or 1/10000 inch (Follows diameter/radius value command (#1019 dia).) |
| Ww | Z axis direction finishing allowance (When omitted, Z axis direction finishing allowance is handled as 0.)<br>Unit: µm or 1/10000 inch (Radius value command) |
| Ff | Cutting speed (When omitted, the cutting speed (modal) just before G72 will be applied) |
| Ss, Tt | Spindle command, tool command |

Also refer to "13.3.1 Longitudinal Rough Cutting Cycle; G71" for details on each address.

## Detailed description

### Finished shape

In the program, S -> A -> E in the figure below are commanded.
The section between A and E must be a shape with monotonous changes in both the X axis and Z axis directions.

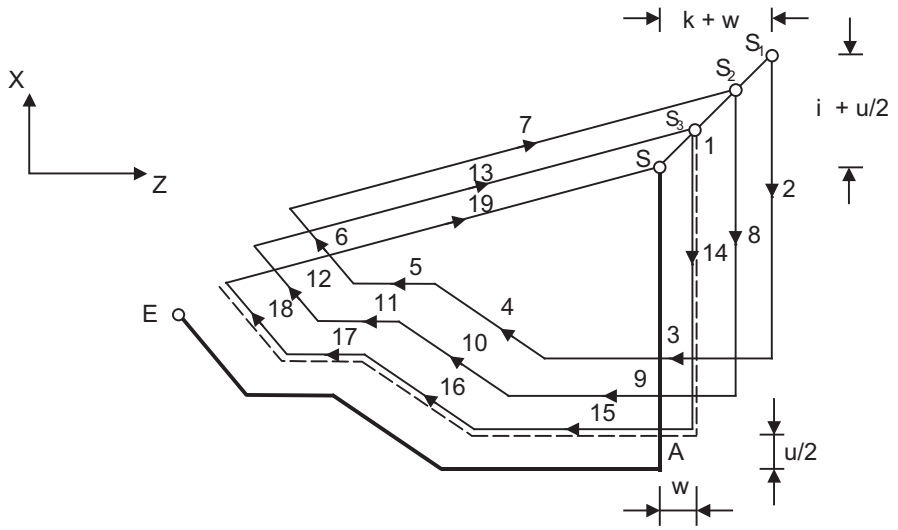


S : G73 cycle command point
A : Finished shape start block
E : Finished shape end block

**Note**

(1) With a single block, operation stops at the end point of each block.

### 1 cycle configuration

1 cycle is configured as shown below.

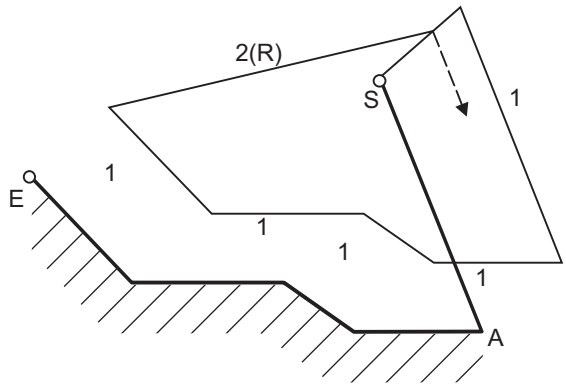


1 : Machining with shape profiling (based on shape program)
2 : Return to the next command point (rapid traverse)
S : G73 cycle command point
A : Finished shape start block
E : Finished shape end block

### Cut amount

The cut amount is calculated by dividing the cutting allowances (i, k) by the number of divisions (d-1).

X axis direction i/(d-1)

Z axis direction k/(d-1)

When the allowance is not divisible, chamfering will be performed and adjustment will be made at the final pass.

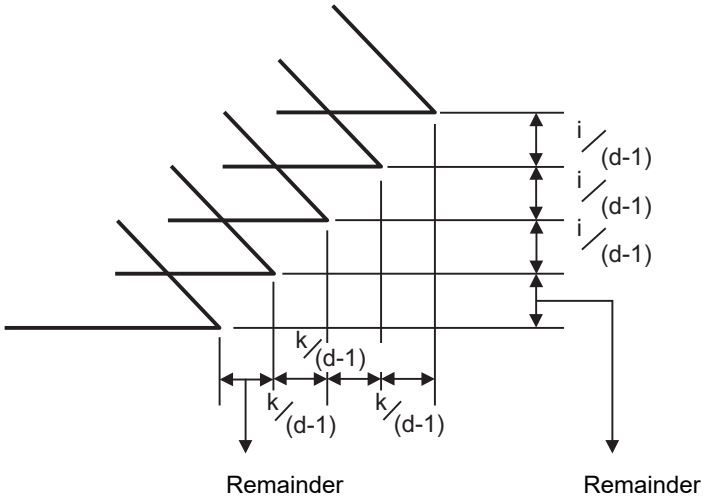


### Nose R compensation

**<#1271 ext07/bit6 = 0>**

When this cycle is commanded with the tool nose R compensation mode still in force, the compensation is temporarily canceled immediately before this cycle and started at the head block of the finished shape program. So the compensation is applied to the finished shape program covered by this cycle and this cycle is executed for the compensated shape.

**<#1271 ext07/bit6 = 1>**

Like G71 and G72 cycle, rough cutting is carried out to the shape which nose radius compensation is not carried out.

### Cutting direction

Determined according to finish shape (#1273 ext09/bit2=0)

The shift direction for the cutting is determined by the shape in the finishing program, as shown in the table below.

| | 1 | 2 | 3 | 4 |
|---|---|---|---|---|
| Drawing | 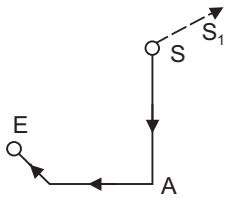 | 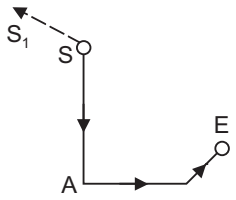 | 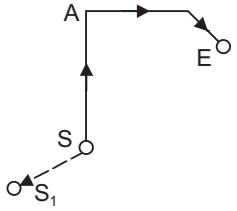 | 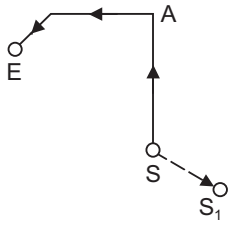 |
| Initial X axis | - direction | - | + | + |
| Complete Z axis | - direction | + | + | - |
| X axis cutting | + direction | + | - | - |
| Z axis cutting | + direction | - | - | + |

S : G73 cycle command point

A : Finished shape start block

E : Finished shape end block

Determined according to commanded finish allowance/cutting allowance (#1273 ext09/bit2=1)

The shift direction for cutting follows the sign of the cutting allowance, etc., designated in the program.

### Precautions

Refer to "13.3.10 Precautions for Compound Type Fixed Cycle for Turning Machining (G70 to G76)".

## 13.3.4 Finishing Cycle; G70

### Function and purpose

After rough cutting have been carried out by the G71 to G73 commands, finishing cutting can be performed by the following command.

### Command format

**Finishing cycle**

| |
|---|
| **G70 Aa Pp Qq Hh;** |

| | |
|---|---|
| Aa | Finished shape program No. (Program being executed when omitted)<br>Use a parameter to specify a 4- or 8-digit finished shape program No. starting with O.<br>If calling a subprogram numbered with O is enabled, a program number starting with O and specified by A command value is called.<br>When A command value is less than the digit number set with parameter "#8129 subprogram number selection", increase the digit number of the command value by adding leading zeros.<br>In the following cases, a subprogram numbered without O and specified by A command value is called even when calling a subprogram numbered with O is enabled.<br>♦The digit number of A command value is over the digit number of the program number set with parameter "#8129 subprogram number selection".<br>♦When a program starting with a commanded O No. does not exist, if A command is omitted, the program P, Q being executed will be applied.<br>When A command is omitted, program command P, Q being executed, will be applied. And when A command is omitted, the program will be executed in the order of G70 and then the program following Qq (finished shape end sequence No.) A file name can be designated instead of address A by enclosing the file name in brackets <>. (The file name can have up to 32 characters including the extension.) |
| Pp | Finished shape start sequence No. (program head when omitted) |
| Qq | Finished shape end sequence No. (To the end of the program when omitted)<br>If M99 is commanded before Q, the program will end at M99 even if Q is commanded. |
| Hh | Tool feed directions when the cutting-edge angle is compensated<br>0: Not compensate the cutting-edge angle<br>1: Compensate the cutting-edge angle in the longitudinal direction (same tool feed direction as G71/G73 command)<br>2: Compensate the cutting-edge angle in the end face direction (same tool feed direction as G72 command)<br>♦When H address is omitted, the cutting-edge is not compensated.<br>♦When the tool shape compensation for turning is disabled, H address is ignored. |

## Detailed description

(1) The F, S and T commands in the finished shape program are valid during the finishing cycle.
(2) When the G70 cycle is finished, the tool returns to the start point at a rapid traverse and the next block is read.

(Example 1) When a sequence No. is designated

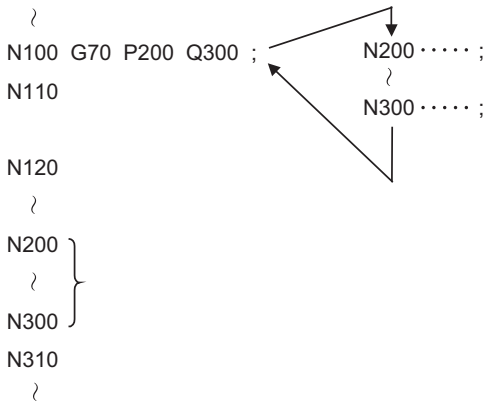


N200-N300 ... Finished shape program

(Example 2) When a program No. is designated

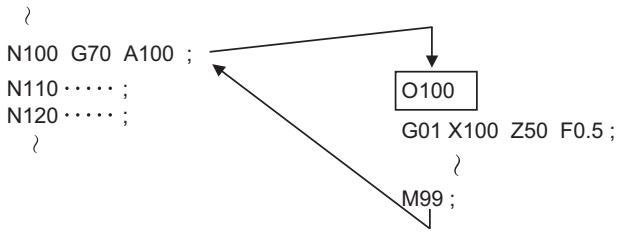


Even for the example 1 and 2, when the N100 cycle is executed, the N110 block is executed next.

## Precautions

Refer to "13.3.10 Precautions for Compound Type Fixed Cycle for Turning Machining (G70 to G76)".

## 13.3.5 Face Cut-off Cycle; G74

### Function and purpose

The G74 fixed cycle automatically performs grooving in the face direction of the workpiece by commanding the co-ordinates of the groove end point, cut amount, cutter shift amount and cutter escape at the bottom of the cut. The machining program commands are as follows.

### Command format

**Face cut-off Cycle**

| |
|---|
| **G74 Re ;** |
| **G74 X/(U)x Z/(W)z Pi Qk Rd Ff ;** |

This fixed cycle requires two blocks.
However, when using a value set by a parameter, the first block can be omitted.

| | | |
|---|---|---|
| Re | Return amount (no X/U, P commands) (modal) Reversible parameter "#8056 G74 RETRACT" is also available for setting. | |
| X/Ux | B point X coordinate (absolute/incremental position) | |
| Z/Wz | B point Z coordinate (absolute/incremental position) | |
| Pi | Tool shift amount (radius designation, incremental position, sign not required) | |
| Qk | Cut amount (radius designation, incremental position, sign not required) | |
| Rd | Escape at the bottom of the cut | When there is no sign, the tool escapes even at the bottom of the first cut. When a - sign is attached, the tool escapes from the second cut without escaping the first cut. |
| Ff | Feedrate | |

<Note>

- A reversible parameter enables to use parameter setting value without issuing a program command and also, the value can be changed by the program command.

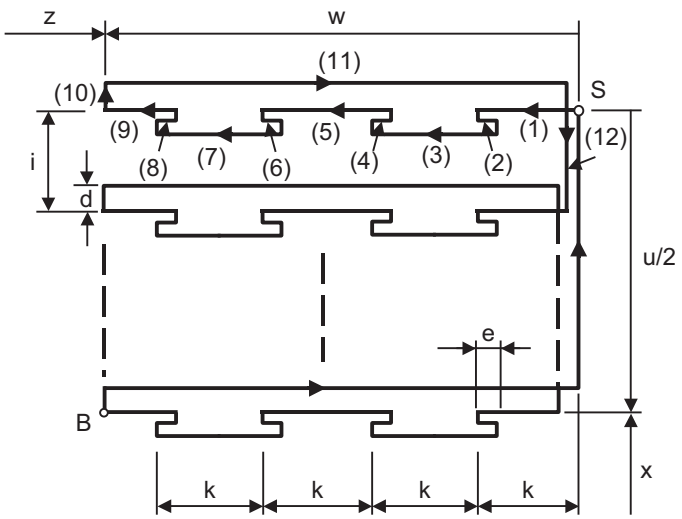


S : Start point B : End point

Operations (9) and (12) immediately before the final cycle are executed with the remainder amount.
Operations (2), (4), (6), (8), (10), (11) and (12) are executed at the rapid traverse rate.
With a single block, operation stops at each block.

## Detailed description

(1) When X/U and P are omitted or when the values of "x" and "i" are zero, operation will apply to the Z axis only. Note that when there is an Rd command and no sign, the tool will escape at the bottom of the cut.

(2) When X/U or Z/W command is not issued, Re setting value will be the return amount. Even when G74 Pi Qk Rd ; is commanded, Rd is regarded as Re, and the return amount will be set.

(3) The escape direction does not change whether - sign is attached to the Rd command or not.

(4) A program error (P204) will occur in the following cases.
- When " i " is zero or P is not commanded even though X/U is commanded.
- When tool shift amount " i " is larger than the "x" movement amount.
- When the escape amount "d" is larger than the shift amount " i ".
- When the return amount "e" is larger than the cut amount "k".
- When the cut in amount "k" is larger than the hole depth "w".

## Precautions

Refer to "13.3.10 Precautions for Compound Type Fixed Cycle for Turning Machining (G70 to G76)".

## 13.3.6 Longitudinal Cut-off Cycle; G75

### Function and purpose

The G75 fixed cycle automatically performs grooving in the longitudinal direction of the workpiece by commanding the coordinates of the groove end point, cut amount, cutter shift amount and cutter escape at the bottom of the cut.

### Command format

**Longitudinal cut-off cycle**

| |
|---|
| **G75 Re** |
| **G75 X/(U)x Z/(W)z Pi Qk Rd Ff ;** |

This fixed cycle requires two blocks.
However, when using a value set by a parameter, the first block can be omitted.

| | | |
|---|---|---|
| Re | Return amount (no X/U, P commands) (modal)<br>Reversible parameter "#8056 G74 RETRACT" is also available for setting. | |
| X/Ux | B point X coordinate (absolute/incremental position) | |
| Z/Wz | B point Z coordinate (absolute/incremental position) | |
| Pi | Cut amount (radius designation, incremental position, sign not required) | |
| Qk | Tool shift amount (radius designation, incremental position, sign not required) | |
| Rd | Escape at the bottom of the cut | When there is no sign, the tool escapes even at the bottom of the first cut. When a "-" sign is attached, the tool escapes from the second cut without escaping the first cut. |
| Ff | Feedrate | |

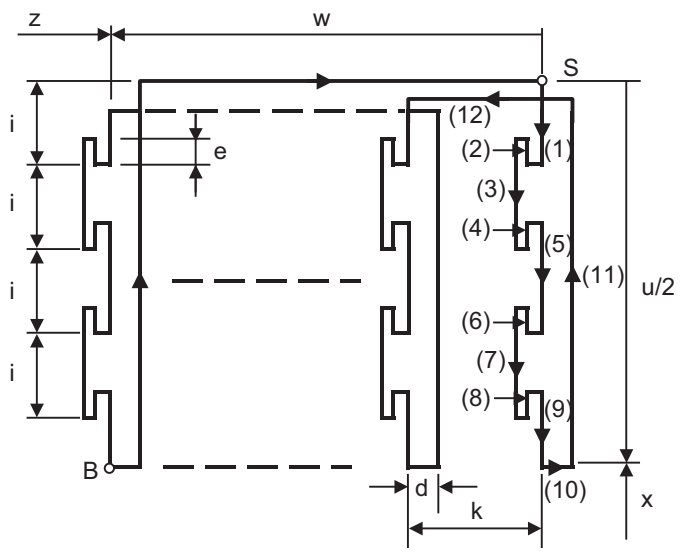


S : Start point B : End point

Operations (9) and (12) immediately before the final cycle are executed with the remainder amount.
Operations (2), (4), (6), (8), (10), (11) and (12) are executed at the rapid traverse rate.
With a single block, operation stops at each block.

### Note

(1) A reversible parameter enables to use parameter setting value without issuing a program command and also, the value can be changed by the program command.

### Detailed description

(1) When Z/W and Q are omitted or when the values of "z" and "k" are zero, operation will apply to the X axis only (slotting). Note that when there is an Rd command and no sign, the tool will escape at the bottom of the cut.

(2) When X/U or Z/W command is not issued, Re setting value will be the return amount. Even when "G75 Pi Qk Rd ;" is commanded, Rd is regarded as Re, and the return amount will be set.

(3) The escape direction does not change whether "-" sign is attached to the Rd command or not.

(4) A program error (P204) will occur in the following cases.

- When "k" is zero or Q is not commanded even though Z/W is commanded.
- When tool shift amount "k" is larger than the "z" movement amount.
- When the escape amount "d" is larger than the shift amount "k".
- When the return amount "e" is larger than the cut amount "i".
- When the cut amount "i" is larger than the hole depth "u/2".

### Precautions

Refer to "13.3.10 Precautions for Compound Type Fixed Cycle for Turning Machining (G70 to G76)".

## 13.3.7 Compound Type Thread Cutting Cycle; G76

### Function and purpose

The G76 fixed cycle enables to cut the workpiece at a desired angle by designating the thread cutting start point and end point, and it automatically performs cutting so that the cutting cross section (cutting torque) per cutting pass is constant.
Various longitudinal direction threads can be cut by bearing in mind the command value for the thread end point coordinate and taper height component.
With compound thread cutting cycle, chamfering can be operated. Refer to "13.1.2 Thread Cutting Cycle; G78" for details on chamfering.
The operation of thread cutting is same as the thread cutting command (G33).

### Command format

**Compound thread cutting cycle**

```
G76 Pmra QΔdmin Rd ;
G76 X/U Z/W Ri Pk QΔd Fl ;
```

This fixed cycle requires two blocks.
However, if "#1222 aux06/bit5" = "1" and "#1265 ext01/bit0" = "0" the 1st block can be omitted. If the 1st block is omitted, the value set with the parameter is used.

| Address | | Meaning |
|---|---|---|
| P | m | Number of cutting passes for finishing: 00 to 99 (times) (modal)<br>(Reversible parameter "#8058 G76 TIMES" is also available for setting) |
| | r | Chamfering amount: 00 to 99 (0.1 mm/rev) (modal)<br>(Reversible parameter "#8014 CDZ-VALE" is also available for setting )<br>The chamfering width based on thread lead "l" is designated by a 2-digit integer without a decimal point between the ranges from 0.0 to 9.9. |
| | a | Tool nose angle (thread angle): 00 to 99 (°) (modal)<br>(Reversible parameter "#8059 G76 ANGLE" is also available for setting)<br>The angle from 0° to 99° is assigned in 1° units.<br>"m", "r" and "a" are commanded in succession during address P.<br>(Example) When m=5, r=1.5 and a=0°, P is 051500 (P051500). The leading and trailing zero cannot be omitted. |
| Q | Δdmin | Minimum cut amount<br>If the calculated cut amount is smaller than Δdmin, it is clamped by Δdmin.<br>(When omitted, operations differ depending on #1222/bit4 setting.) (*1) |
| R | d | Finishing allowance 0 to 9999 (μm) (modal)<br>(Reversible parameter "#8057 G76 LAST-D" is also available for setting) |
| X/U | | X axis end point coordinates of thread section<br>The X axis coordinates of the end point at the thread section are commanded with absolute or incremental position. |
| Z/W | | Z axis end point coordinates of thread section<br>The Z axis coordinates of the end point at the thread section are commanded with absolute or incremental position. |
| R | i | Taper height component (radius value) for thread<br>Straight thread when "i" is zero |
| P | k | Thread height<br>This thread height is commanded with a positive radius value. |
| Q | Δd | Cut amount<br>The cut amount for the first cutting pass is commanded with a positive radius value. |
| F | l | Thread lead |

(*1) The precautions for the thread cutting cycle (G78) should be observed.

### Note

(1) A reversible parameter enables to use parameter setting value without issuing a program command and also, the value can be changed by the program command.

(2) The two G76 commands above cannot be assembled in a block.
The data commanded by P, Q and R are automatically identified according to the presence or absence of the X/U and Z/W axis addresses.

(3) The above "r" modal data can be rewritten by the program commands as well as using parameter (#8014 CDZVALE) settings.

(4) The chamfering amount designation is valid even for thread cutting fixed cycles.

(5) A program error (P204) will occur in the following cases.
- When "a" is outside the rated value
- When both or one of the X and Z commands is not issued, or when the start and end point coordinates coincides in both or one of the X and Z commands
- When the thread is larger than the movement of the X axis to the thread bottom

## Detailed description

### 1 cycle configuration

The tool moves at rapid traverse for operations (1), (2), (5) and (6) in the cycle and at the cutting feed based on the F designation for operations (3) and (4) during 1 cycle.

[When Ri is negative]

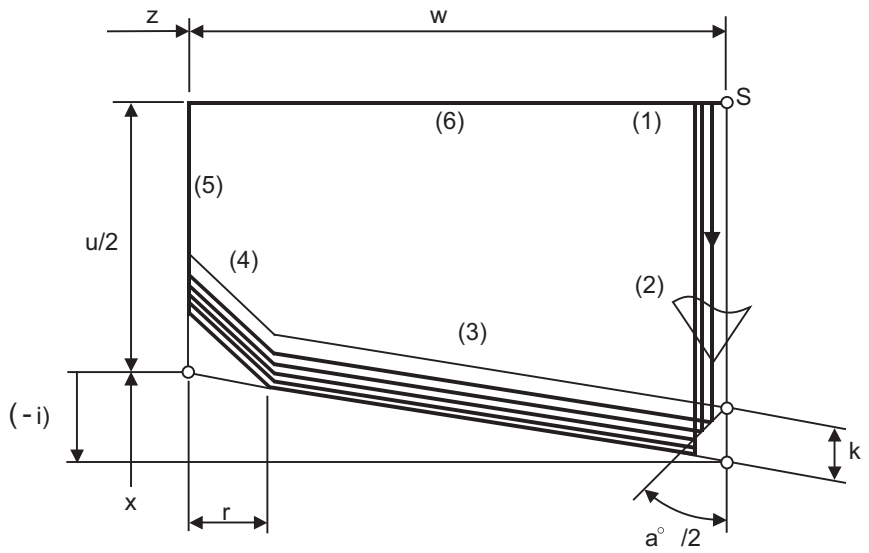

[When Ri is positive]

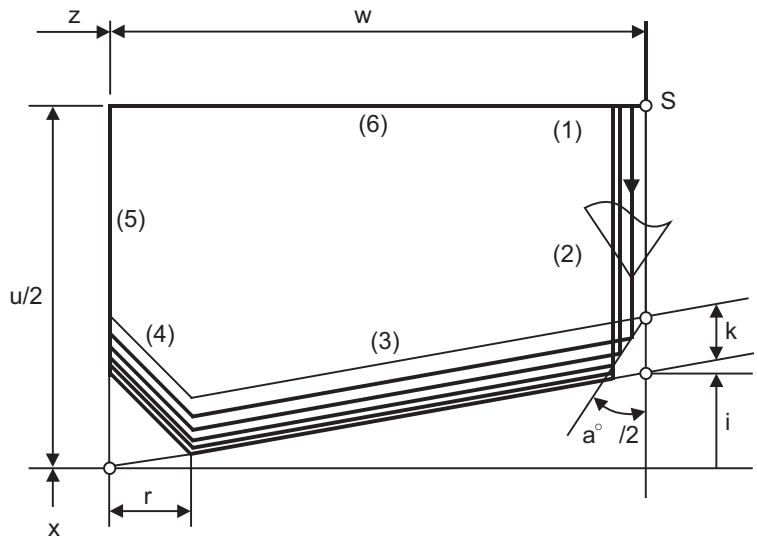


[Cut amount]

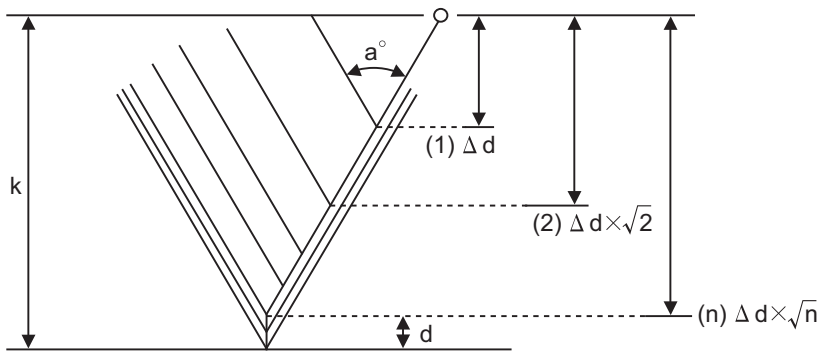


K: Thread height

d : Finishing allowance (cut "m" times)

(1) to (n) : 1st cutting to nth cutting

### Interrupt operation

(1) When the feed hold button is pressed during thread cutting, an automatic operation will stop upon completion of a block without thread cutting. (The automatic operation pause lamp turns on immediately and it goes off when automatic operation stops.)
If feed hold is applied when thread cutting is not executed, or when the thread cutting command is issued but the axis is yet to move, the automatic operation pause lamp will turn on, and the automatic operation will pause.

(2) The tool stops upon completion of operations (1), (4) and (5) in the figure, if the following operations are conducted during the G76 command execution.

- When the automatic operation mode is switched to another automatic operation mode
- When automatic operation is changed to manual operation
- When single block operation is conducted

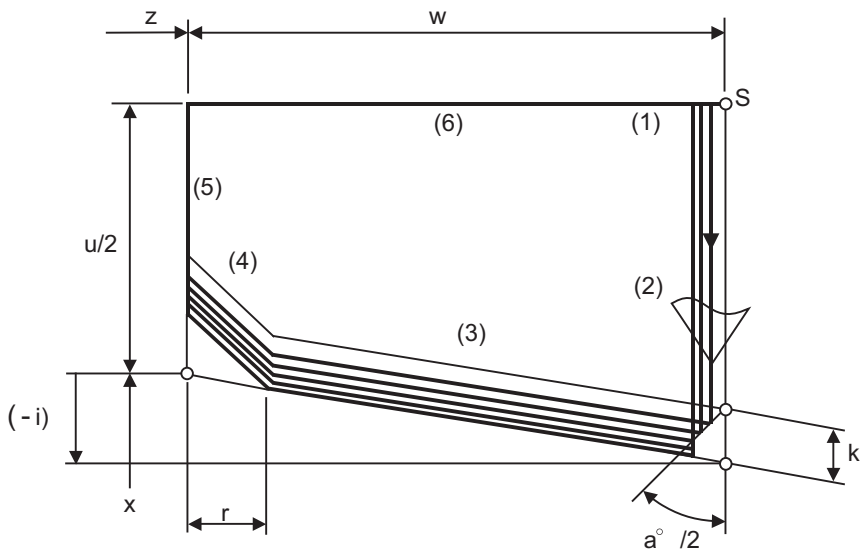


When Ri is negative

(3) The dry run valid/invalid status does not change when G76 is being executed.

## Program example

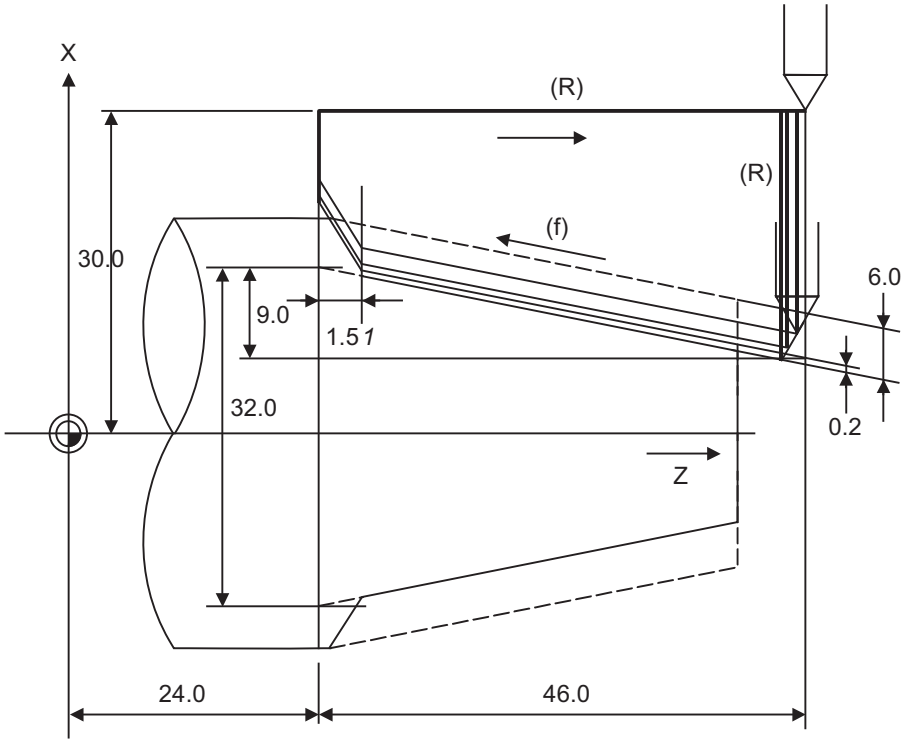


(R) Rapid traverse (f) Cutting feed

| |
|---|
| G76 P011560 R0.2 ; |
| G76 U-28.0 W-46.0 R-9.0 P6.0 Q3.5 F4.0 ; |

## Precautions

Refer to "13.3.10 Precautions for Compound Type Fixed Cycle for Turning Machining (G70 to G76)".

## 13.3.8 Selecting Finished Shape Program Search Method

**When G71, G72 or G73 is commanded**

Selects the search method of the finished shape program to be called with G71, G72 or G73 command.
The search method is set in the parameter "#1270 ext06/bit2".
The symbol "A" in the description in this chapter represents G71 cycle command point.

<"#1270 ext06/bit2" = "0">

- If the finished shape program is in the program being executed, the start sequence No. is searched from the top of the program being executed. The search is executed until EOR.
- If the finished shape program is in the program specified with "A", the start sequence is searched from the top of the program specified with "A". The search is executed until EOR.

<"#1270 ext06/bit2" = "1">

- If the finished shape program is in the program being executed, the start sequence No. is searched from the next block after G71, G72 or G73. The search is executed until EOR.

| When the start sequence Nos. are not overlapped | |
|---|---|
| O1()<br>G00 T0101;<br>X80. Z-50. ;<br>G71 U3. R1. ;<br>**G71 P10 Q20** … ; ... (a)<br>N10 G00 X50. ; ... (b)<br>:<br>N20 ;<br>:<br>G00 T0202;<br>X50. Z-10. ;<br>G72 W2. R1. ;<br>**G72 P30 Q40** … ; ... (c)<br>N30 G00 Z-40. ; ... (d)<br>:<br>N40 ;<br><br>Finished shape program (1)<br>Finished shape program (2) | (a) The finished shape program in G71 block<br>・The search is executed from the next block (b) after G71.<br>・N10 of the finished shape program (1) is searched.<br><br>(c) The finished shape program in G72 block<br>・The search is executed from the next block (d) after G72.<br>・N30 of the finished shape program (2) is searched. |
| **When the start sequence Nos. are overlapped** | |
| O1()<br>G00 T0101;<br>X80. Z-50. ;<br>G71 U3. R1. ;<br>**G71 P10 Q20 … ;** ... (a)<br>N10 G00 X50. ; ... (b)<br>:<br>N20 ;<br>:<br>G00 T0202;<br>X50. Z-10. ;<br>G72 W2. R1. ;<br>**G72 P10 Q20 … ;** ....(c)<br>N10 G00 Z-40. ; ... (d)<br>:<br>N20 ;<br><br>Finished shape program (1)<br>Finished shape program (2) | (a) The finished shape program in G71 block<br>・The search is executed from the next block (b) after G71.<br>・N10 of the finished shape program (1) is searched.<br><br>(c) The finished shape program in G72 block<br>・The search is executed from the next block (d) after G72.<br>・N10 of the finished shape program (2) is searched. |

- If the finished shape program is in the program specified with "A", the start sequence No. is searched from the top of the program specified with "A". The search is executed until EOR.

| | |
|---|---|
| O1()<br>G00 T0101;<br>X80. Z-50. ;<br>G71 U3. R1. ;<br>**G71 A10 P10 Q20 … ;** ... (a)<br>:<br>:<br>:<br>G00 T0202;<br>X50. Z-10. ;<br>G72 W2. R1. ;<br>**G72 A20 P10 Q20 … ;** ... (c)<br>:<br><br>Finished shape program (1)<br>O10()<br>N10 G00 X50. ; ... (b)<br>:<br>N20 ;<br><br>Finished shape program (2)<br>O20()<br>N10 G00 Z-40. ; ... (d)<br>:<br>N20 ; | (a) The finished shape program in G71 block<br>• The search is executed from the top (b) of O10 specified with "A".<br>• N10 of the finished shape program (1) is searched.<br><br>(c) The finished shape program in G72 block<br>• The search is executed from the top (d) of O20 specified with "A".<br>• N10 of the finished shape program (2) is searched. |

## While a G70 command is effective

Selects the search method of the finished shape program to be called with G70 command.
The search method is set in the parameter "#1270 ext06/bit2".
The symbol "A" in the description in this chapter represents G71 cycle command point.

<"#1270 ext06/bit2" = "0">

- If the finished shape program is in the program being executed, the start sequence No. is searched from the top of the program where G70 was commanded. The search is executed until EOR.
- If the finished shape program is in the program specified with "A", the start sequence No. is searched from the top of the program specified with "A". The search is executed until EOR.

<"#1270 ext06/bit2" = "1">

- If the finished shape program is in the program being executed, the start block of the finished shape program where the program No. and start sequence No. in G71, G72 or G73 executed before G70 command are matched (the program No. is the one being executed). Up to three start sequence Nos. of the finished shape program in G71, G72 and G73 are stored.
  If the start sequence Nos. in the executed G71, G72 or G73 finished shape program are not matched, the search is executed from the top of the program.
  If G71, G72 or G73 is not executed, the search is executed from the top of the program.
  The search is executed until EOR.
  The memory of start sequence No. is deleted by reset.

| When the start sequence Nos. are not overlapped (rough cutting 1 -> finishing 1 -> rough cutting 2 -> finishing 2) | |
|---|---|
| O1()<br>G00 T0101;<br>X80. Z-50. ;<br>G71 U3. R1. ;<br>G71 P10 Q20 … ; ... (a)<br>N10 G00 X50. ; ... (b)<br>:<br>N20 ;<br>**G70 P10 Q20 ;** ... (c)<br>:<br><br>Finished shape program (1)<br><br>G00 T0202;<br>X50. Z-10. ;<br>G72 W2. R1. ;<br>G72 P30 Q40 … ; ... (d)<br>N30 G00 Z-40. ; ... (e)<br>:<br>N40 ;<br>**G70 P30 Q40 ;** ...(f)<br><br>Finished shape program (2) | (a) The start sequence No. N10 of the finished shape program (1) with G71 is stored.<br><br>(c) The finished shape program in G70 block<br>• Matches with N10 of the finished shape program (1) among the stored start sequence Nos.<br>• The search is executed from the corresponding block (b) and then N10 in the finished shape program (1) is searched.<br>• The memory of the finished shape program (1) is deleted.<br><br>(d) The start sequence No. N30 of the finished shape program (2) with G72 is stored.<br><br>(f) The finished shape program in G70 block<br>• Matches with N30 of the finished shape program (2) among the stored start sequence Nos.<br>• The search is executed from the corresponding block (e) and then N30 in the finished shape program (2) is searched.<br>• The memory of the finished shape program (2) is deleted. |

When the start sequence Nos. are overlapped (rough cutting 1 -> finishing 1 -> rough cutting 2 -> finishing 2)

```
O1()
G00 T0101;
X80. Z-50. ;
G71 U3. R1. ;
G71 P10 Q20 … ; ... (a)
N10 G00 X50. ;     ... (b)
  :                          Finished shape
N20 ;                        program (1)
G70 P10 Q20 ;      ... (c)
  :

G00 T0202;
X50. Z-10. ;
G72 W2. R1. ;
G72 P10 Q20 … ; ... (d)
N10 G00 Z-40. ;    ... (e)
  :                          Finished shape
N20 ;                        program (2)
G70 P10 Q20 ;      ... (f)
```

(a) The start sequence No. N10 of the finished shape program (1) with G71.

(c) The finished shape program in G70 block
- Matches with N10 of the finished shape program (1) among the stored start sequence Nos.
- The search is executed from the corresponding block (b) and then N10 in the finished shape program (1) is searched.
- The memory of the finished shape program (1) is deleted.

(d) The start sequence No. N10 of the finished shape program (2) with G72 is stored.

(f) The finished shape program in G70 block
- Matches with N10 of the finished shape program (2) among the stored start sequence Nos.
- The search is executed from the corresponding block (e) and then N10 in the finished shape program (2) is searched.
- The memory of the finished shape program (2) is deleted.

- If the finished shape program is in the program specified with "A", the start block of the finished shape program where the program No. and start sequence No. among the executed finished shape programs in G71, G72 or G73. Up to three start sequence Nos. of the finished shape program in G71, G72 and G73 are stored. If the program No. and the start sequence No. among the finished shape programs in the executed G71, G72 or G73 are not matched, the search is executed from the top of the program specified with "A".
  If G71, G72 or G73 is not executed, the search is executed from the top of the program specified with "A".
  The search is executed until EOR.
  The memory of start sequence No. is deleted by reset.

```
O1()
G00 T0101;
X80. Z-50. ;
G71 U3. R1. ;                Finished shape program (1)
G71 A10 P10 Q20 … ; …(a)
                             O10()
G70 A10 P10 Q20 ;     …(b)   N10 G00 X50. ; ... (c)
  :                            :
  :                          N20 ;
  :
  :
G00 T0202;
X50. Z-10. ;
G72 W2. R1. ;                Finished shape program (2)
G72 A20 P10 Q20 … ; …(d)
                             O20()
G70 A20 P10 Q20 ;     …(e)   N10 G00 Z-40. ; ... (f)
  :                            :
                             N20 ;
```

(a) The program No. O10 and the start sequence No. N10 of the finished shape program (1) is stored with G71.

(b) The finished shape program in G70 block
- Matches with O10 and N10 of the finished shape program (1) among the stored program Nos. and start sequence Nos.
- The search is executed from the corresponding block (c) and then N10 in the finished shape program (1) is searched.
- The memory of the finished shape program (1) is deleted.

(d) The program No. O20 and the start sequence No. N10 of the finished shape program (2) is stored with G72.

(e) The finished shape program in G70 block
- Matches with O20 and N10 of the finished shape program (2) among the stored program Nos. and start sequence Nos.
- The search is executed from the corresponding block (f) and then N10 in the finished shape program (2) is searched.
- The memory of the finished shape program (2) is deleted.

## 13.3.9 Tool Shape Compensation for Turning

The area where the tool can machine is limited depending on the tool shape. Therefore, when machining is performed out of the area, interference between tool and workpiece may occur, which may result in damage.
Tool shape compensation for turning in compound type fixed cycle for turning machining I can compensate the finished shape so that the interference between tool and workpiece does not occur by the tool shape and can perform the rough cycle and finishing cycle.
Tool shape compensation for turning can be used by setting the parameter "#8137 T. tool shape comp" to "1".

### Cutting-edge angle compensation

Cutting-edge angle compensation judges the tool machining available area from the side-cutting-edge angle and end-cutting-edge angle of the tool to compensate the finished shape.
To use the cutting-edge angle compensation, with "#8137 T. tool shape comp" set to "1", command compound type fixed cycle for turning machining I (G70 to G73).

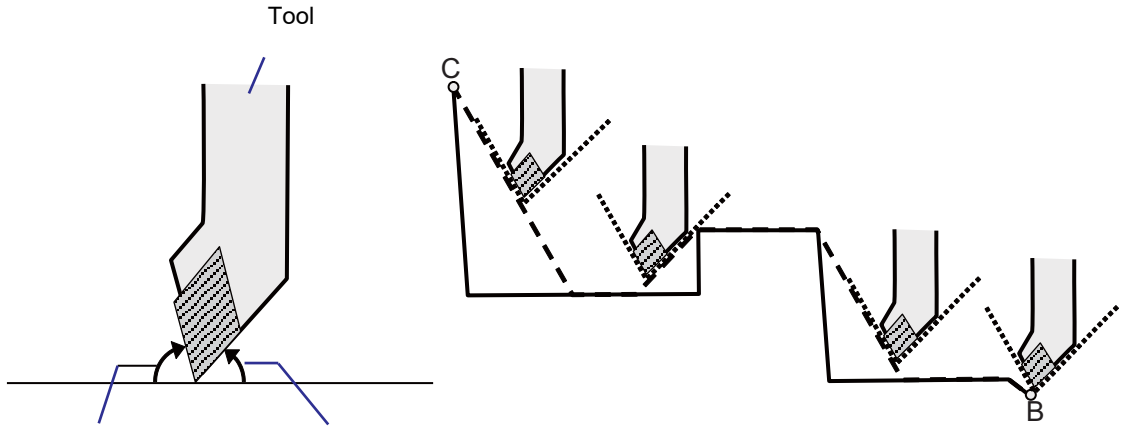


Side-cutting-edge angle End-cutting-edge angle

Finished shape before compensation
Finished shape after compensation
Compensation angle with cutting-edge angle compensation

B: Finished shape start block
C: Finished shape end block

- The available range of side-cutting-edge angle and end-cutting-edge angle is as below.
  0° < side-cutting-edge angle ≤ 90°
- The available range of cutting-edge is judged for side-cutting-edge angle and end-cutting-edge angle respectively. If the cutting-edge angle is outside the available range, the cutting-edge angle compensation outside the available range is not performed.

(Example) When the side-cutting-edge angle is 92°, and the end-cutting-edge angle is 5°
Since the side-cutting-edge angle is outside the available range, the cutting-edge angle compensation is performed only for the end-cutting-edge angle.

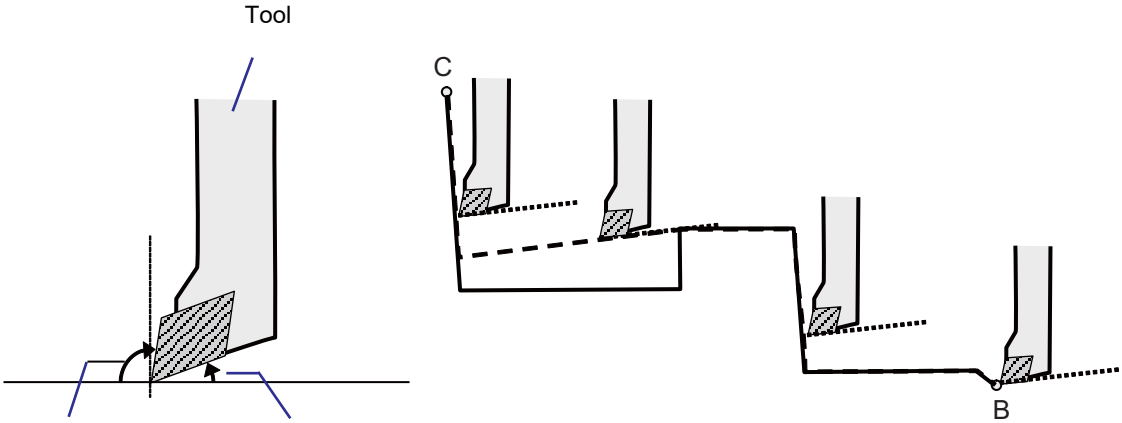


Finished shape before compensation
Finished shape after compensation
Compensation angle with cutting-edge angle compensation

B: Finished shape start block
C: Finished shape end block

- If G02 or G03 command is used for the finished shape, G01 command block may be inserted with the cutting-edge angle compensation. If the finished shape exceeds 200 blocks including the insertion block, the program error (P202) occurs.

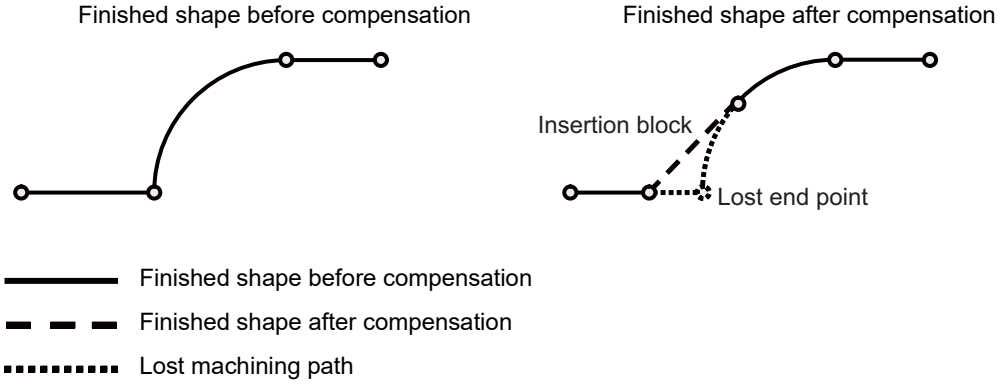


- For the machining of open section (machining from the face), if the tool moves greatly in X axis direction when the movement from the start block before compensation in Z axis direction is small, the finished shape start block is compensated as the finished shape start block is inside the compensated shape by the side-cutting-edge angle. The position of the finished shape start block after the compensation is as below.
  Z axis: Same as the finished shape start block before the compensation
  X axis: On the compensated shape by the side-cutting-edge angle
  When G72 is commanded, X axis and Z axis are switched. The finished shape start block is compensated when the movement in Z axis direction is great while the movement in X axis direction is small.

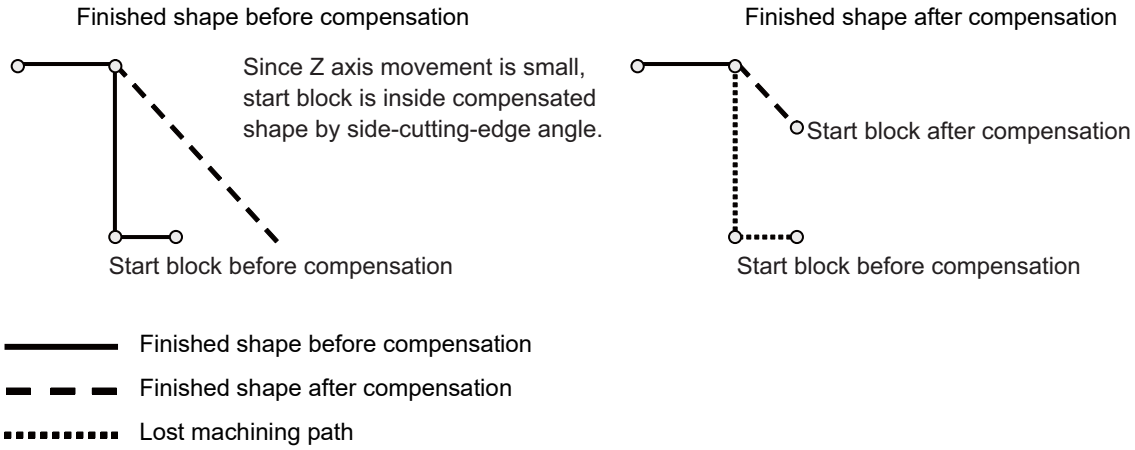


## Setting the cutting-edge angle

There are two types to set the cutting-edge angle, "tool shape method" and "tool compensation method", and the setting of your machine depends on the MTB specification (the parameter "#11716 CutEdgeAngleType").

### Cutting-edge angle compensation when G70 is commanded

The cutting-edge angle can also be compensated with G70 command (finishing cycle). When the cutting-edge angle compensation is performed with G70 command, specify the tool feed direction (not specified, longitudinal, face) with H address to select a direction of the cutting-edge angle compensation.

H0: No specification for tool feed direction (the cutting-edge angle compensation is not performed.)

H1: Longitudinal for tool feed direction (the cutting-edge angle compensation is performed to the same tool feed direction as G71/G73 commands.)

H2: Face for tool feed direction (the cutting-edge angle compensation is performed to the same tool feed direction as G72 command.)

H1: Longitudinal direction
(Same tool feed direction as G71/G73 commands)

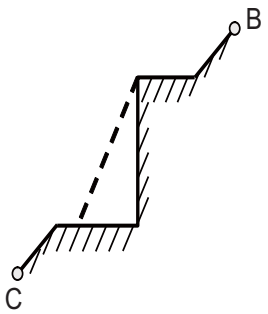


H2: Face direction
(Same tool feed direction as G72 command)

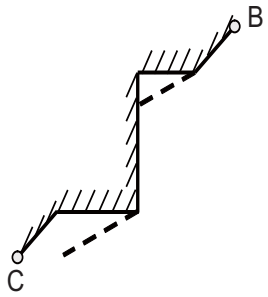


Finished shape before compensation

Finished shape after compensation

B: Finished shape start block

C: Finished shape end block

**Note**

(1) When H0 command and H address are omitted, the cutting-edge angle compensation is not compensated.

(2) The command range of H address is 0 to 2. When the value outside the range is commanded, the program error (P35) occurs.

(3) While the tool shape compensation for turning is disabled, H address is ignored.

## 13.3.10 Precautions for Compound Type Fixed Cycle for Turning Machining (G70 to G76)

**Precautions**

(1) Command all required parameters in a compound type fixed cycle for turning machining command block.

(2) Provided that the finished shape program is registered in the memory, compound type fixed cycle for turning machining I commands can be executed in the memory, MDI or tape mode.

(3) When executing G70 to G73 command, ensure that the sequence No. of the finished shape program which is designated with P and Q is not duplicated in that program.

(4) For the finished shape program to be specified between P and Q in G70 or G71 to G73 during the tool shape compensation for turning enabled, create all the commands including corner chamfering, corner R command, tool nose radius compensation and automatic insertion block by tool shape compensation for turning within 200 blocks. If this number is exceeded, program error (P202) will occur.
If the cutting start position is the cycle start position (#1271 ext07/bit5 =1), the finished shape program can have up to 199 blocks. (When the cycle start point is located out of the finished shape program's final position.)

(5) The finished shape program which is designated by the G70 during the tool shape compensation for turning enabled or G71 to G73 blocks should be a program with monotonous changes (increases only or reductions only) for both the X and Z axes.

(6) Blocks without movement in the finished shape program are ignored.

(7) N, F, S, M, and T commands in the finished shape program are ignored.

(8) When any of the following commands exists in a finished shape program, program error (P201) will occur.
(a) Commands related to reference position return (G27, G28, G29, G30)
(b) Thread cutting (G33)
(c) Fixed cycles
(d) Skip functions (G31, G37)
(e) Circular thread cutting (G35, G36)

(9) If subprogram call or macro call command exists in the finished shape program, these commands will also be executed.

(10) Except for thread cutting cycles, operation stops at the end (start) point of each block in the single block mode.

(11) Note that, depending on whether the sequence No. or program No. is designated, the next block after the completion of the G71, G72 or G73 command will differ.

| (a) When a sequence No. is designated | (b) When a program No. is designated |
|---|---|
| The next block is the one designated by Q.<br>~<br>N100 G71P200 Q500 U_W_… ;<br>N200<br>N300 } (*1)<br>N400<br>N500<br>N600<br>(*1) The finished shape program<br>Operation moves to the N600 block upon completion of the cycle. | The next block is the next block of the cycle command.<br>~<br>N100 G71A100 U_W_… ;<br>N200<br>N300<br>N400<br>O100<br>N10X100.Z50. ;<br>N20 ⋮<br>⋮ ⋮<br>Operation moves to the N200 block upon completion of the cycle. |

(12) The next block after the completion of the G70 command is the next block of the command block.

```
 :
N100 .... ;
N200 .... ;
N300 .... ;
N400 .... ;
N500 .... ;
 :
N1000 G70 P200 Q500 ; (or G70A100 ; )
N1100 .... ;
 :
```

Operation moves to the N1100 block upon completion of G70 command.

(13) It is possible to apply a manual interruption while a compound type fixed cycle for turning machining command (G70 to G76) is being executed. However, upon completion of the interrupt, the tool must first be returned to the position where the interrupt was applied and then the compound type fixed cycle for turning machining must be restarted.
If it is restarted without the tool having been returned, all subsequent movements will deviate by an amount equivalent to the manual interruption amount.

(14) Compound type fixed cycle for turning machining commands are unmodal. So they must be issued every time they are required.

(15) Program error (P203) will occur with the G71 and G72 commands when there is no further movement of the Z axis in the second block or the Z axis has moved in the opposite direction because of nose R compensation or tool shape compensation for turning.

(16) A program error (P204) will occur if the finished shape program is issued in a same program with G70 to G73 and both P and Q are not designated.
Note that if A, P and Q are all not designated in G71 to G73, this will be interpreted as the first block of the compound type fixed cycle for turning machining I, and an error will not occur.

(17) Set the cycle start point in the final block of the compound type fixed cycle for turning machining I so that the tool retracts from the workpiece cutting face. This is necessary to prevent the cutter from interfering with the convex sections of the workpiece.
The figure below shows a poor example. The position (A) is located higher than the cycle start point and an interference will occur in the final block. (A)

| Poor example | Good example |
|---|---|
| 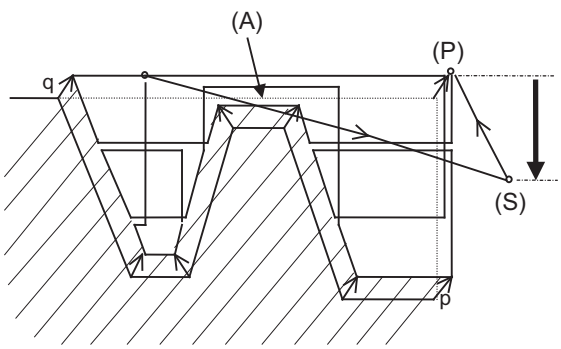  | 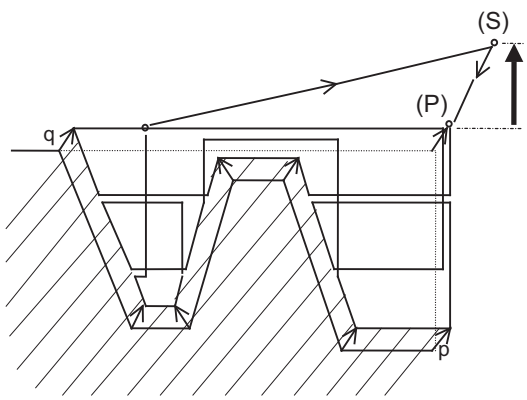  |

(18) If there is no specification for pocket machining, H1 will operate as H0 even if designated.

(19) The common variable settings are ignored in the finished shape program. The setting values before compound type fixed cycle for turning machining I command will be valid.

(20) If there is a circular command in the first movement block for the finished shape when pocket machining is OFF, a program error (P203) will occur.

(21) The setting range of the cutting-edge angle and the valid range of the cutting-edge angle compensation are as below.

Setting range of the cutting-edge angle: 0° ≤ cutting-edge angle ≤ 180°

Valid range of the cutting-edge angle compensation: 0° < cutting-edge angle ≤ 90°

(22) With the cutting-edge angle compensation, as the finished shape is compensated according to the set cutting-edge angle, the machining surface and the cutting-edge are in contact. Depending on the depth of cutting, the discharge of cutting chips may become worse and scratches may be on the machining surface. In that case, set the angle with margin to the cutting-edge angle.

(23) When the finished shape before compensation display of tool shape compensation for turning is used, set the parameter "#8137 T. tool shape comp" to "1" and then set the parameter "#8138 Pre-compens. shape" to "0".

# 13.4 Compound Type Fixed Cycle for Turning Machining (MITSUBISHI CNC Special Format) ; G71, G73, G74, G76

## Function and purpose

This function enables to perform a prepared fixed cycle by commanding a program in a block.
When using the MITSUBISHI CNC special format ("#1265 ext01/bit0" is "1"), some addresses differ from the normal format. With the normal format, G71 to G76 are commanded in two blocks. However with the MITSUBISHI CNC special format, these are commanded in one block. This section gives details on the formats different from the normal ones.
Refer to section "13.3 Compound Type Fixed Cycle for Turning Machining" for details on the compound type fixed cycle for turning machining.

## Command format

### Longitudinal rough cutting cycle, face rough cutting cycle

```
G71 P__ Q__ U__ W__ D__ F__ S__ T__ ;
```

| | |
|---|---|
| P | Finished shape start sequence No. |
| Q | Finished shape end sequence No. |
| U | X-axis direction finishing allowance |
| W | Z-axis direction finishing allowance |
| D | Cut amount |
| F | Cutting speed |
| S | Spindle speed |
| T | Tool command |

(Same for G72)

### Formed material rough cutting cycle

```
G73 P__ Q__ U__ W__ I__ K__ D__ F__ S__ T__ ;
```

| | |
|---|---|
| P | Finished shape start sequence No. |
| Q | Finished shape end sequence No. |
| U | X-axis direction finishing allowance |
| W | Z-axis direction finishing allowance |
| I | X-axis direction cutting allowance |
| K | Z-axis direction cutting allowance |
| D | Number of divisions |
| F | Cutting speed |
| S | Spindle speed |
| T | Tool command |

### Face cut-off cycle, longitudinal cut-off cycle

```
G74 X(U)__ Z(W)__ I__ K__ F__ D__ ;
```

| | |
|---|---|
| X(U) | X axis slotting end point coordinate |
| Z(W) | Z axis slotting end point coordinate |
| I | Tool shift amount (X/U axis direction movement amount) |
| K | Cut amount (Z/W axis direction cut amount) |
| F | Cutting speed |
| D | Tool escape amount at cutting base |

(Same for G75)

### Compound thread cutting cycle

```
G76 X(U)__ Z(W)__ I__ K__ D__ F__ A__ Q__ P__ ;
```

| | |
|---|---|
| X(U) | X-axis end point coordinates of thread section |
| Z(W) | Z-axis end point coordinates of thread section |
| I | Radius value at thread section |
| K | Thread height |
| D | 1st cut amount |
| F | Thread lead |
| A | Thread angle |
| Q | Thread cutting start shift angle (0.001 to 360.000 [°]) |
| P | Zigzag thread cutting at P2 command [For specific models only (No specification for M800 Series)] |

Contents of thread cutting address will be same as G33.

## Detailed description

### Check of command format

This checks whether the normal command format is being used with the MITSUBISHI CNC special format.

**[When normal format is selected ("#1265 ext01/bit0" is set to "0")]**

(1) Check of command format
When the format check selection parameter (#1222 aux06/bit5) is set to "0", a program error (P33) will occur in the following cases.

- There is no command to the 1st block.
- A MITSUBISHI CNC special format is commanded.

(2) Check of command address
A program error (P32) will occur in the following cases.

- When address I, K or D is commanded in the G71, G72, G73, G74 or G75 block.
- When address I, K, D or A is commanded in the G76 block.

**[When MITSUBISHI CNC special format is selected ("#1265 ext01/bit0" is set to "1")]**

(1) Check of command format
A program error (P33) will occur if a normal format is commanded.

(2) Check of command address
A program error (P32) will occur in the following cases.

- When address R or A is commanded in the G71, G72 or G73 block.
- When address P, Q or R is commanded in the G74 or G75 block.
- When address R is commanded in the G76 block.

### Comparison of MITSUBISHI CNC special format and normal format

While the normal format is commanded using two blocks, the MITSUBISHI CNC special format requires only one block. Some addresses differ, and some are designated with the parameters.

| Function | (MITSUBISHI CNC special format | Normal format | Difference from normal format |
|---|---|---|---|
| Longitudinal Rough Cutting Cycle I | G71 P Q U W D F S T; | (1) G71 U R;<br>(2) G71 A P Q U W F S T; | Cut amount:<br>U(1) → Specify with D. |
| | | | Retract amount:<br>R(1) -> Parameter (#8052 PULL UP) |
| | | | A command (finished shape program No.):<br>None |
| Face Rough Cutting Cycle I | G72 P Q U W D F S T; | (1) G72 W R;<br>(2) G72 A P Q U W F S T; | Cut amount:<br>W(1) → Specify with D. |
| | | | Retract amount:<br>R(1) -> Parameter (#8052 PULL UP) |
| | | | A command (finished shape program No.):<br>None |
| Formed material rough cutting cycle | G73 P Q U W I K D F S T; | (1) G73 U W R;<br>(2) G73 A P Q U W F S T; | X axis direction cutting allowance: U(1)→I |
| | | | Z axis direction cutting allowance: W(1)→K |
| | | | Number of divisions: R(1)→D |
| | | | A command (finished shape program No.):<br>None |
| Face cut-off Cycle | G74 X Z I K F D;or<br>G74 U W I K F D; | (1) G74 R;<br>(2) G74 X Z P Q R F;<br>or<br>(1) G74 R;<br>(2) G74 U W P Q R F; | X axis direction movement amount: P(2)→I |
| | | | Z axis direction cut amount: Q(2)→K |
| | | | Escape amount at cutting base:<br>R(2)→D |
| | | | Retract amount:<br>R(1) -> Parameter (#8056 G74 RETRACT) |
| Outer Diameter Cut-Off Cycle | G75 X Z I K F D;or<br>G75 U W I K F D; | (1) G75 R;<br>(2) G75 X Z P Q R F;<br>or<br>(1) G75 R;<br>(2) G75 U W P Q R F; | X axis direction cut amount: P(2)→I |
| | | | Z axis direction movement amount:<br>Q(2)→K |
| | | | Escape amount at cutting base: R(2)→D |
| | | | Retract amount: R(1) -> Parameter (#8056 G74 RETRACT) |
| Compound thread cutting cycle | G76 X_ Z_ I_ K_ D_ F_ A_ Q_ ; | (1) G76 Pmra R_;<br>(2) G76 X_ Z_ R_ P_ Q_ F_; | Radius value at thread section: R(2)→I |
| | | | Thread height:<br>P(2)→K |
| | | | 1st cut amount:<br>Q(2)→D (*1) |
| | | | Thread angle: P(1)a→A |
| | | | Thread cutting: P(1)r → Parameter (#8014 CDZ-VALE) |
| | | | Number of finish cuts: P(1)m → Parameter (#8058 TIMES) |
| | | | Finishing allowance: R(1) -> Parameter (#8057 LAST-D) |

(*1) The Q address of the MITSUBISHI CNC special format is used as the thread cutting start shift angle.

## Zigzag thread cutting [For specific models only (No specification for M800 Series)]

By commanding P2 in the G76 block of the compound thread cutting cycle, zigzag thread cutting with a constant cut amount can be performed.

**[When Ii (taper height component at thread section) is negative]**

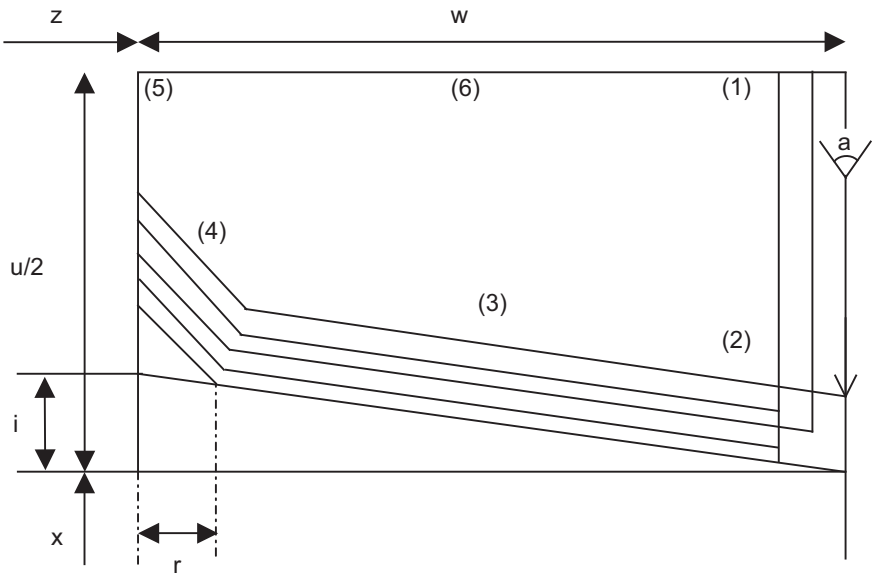


i : Taper height component (radius value) for thread
r : Chamfering amount (Set by #8014 CDZ-VALE)

**[When Ii (taper height component at thread section) is positive]**

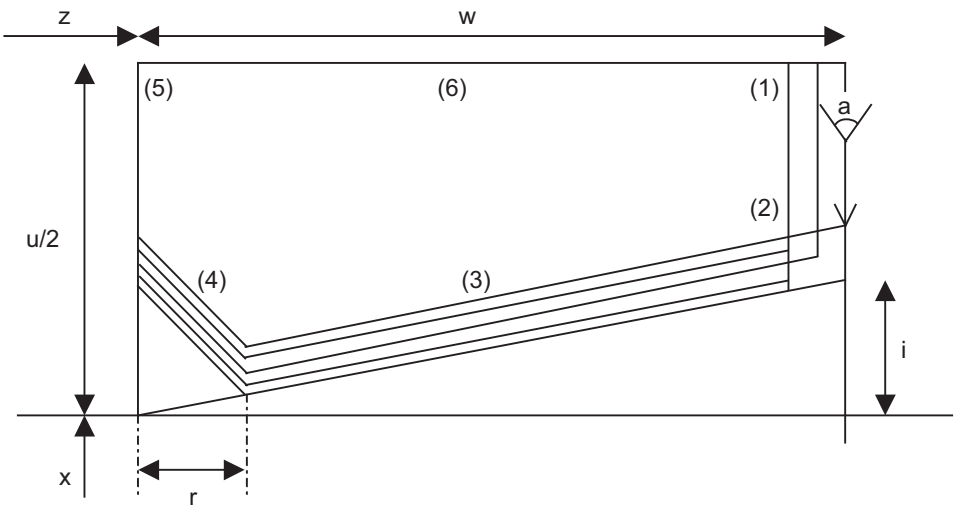


i : Taper height component (radius value) for thread
r : Chamfering amount (Set by #8014 CDZ-VALE)

**[Cut amount]**

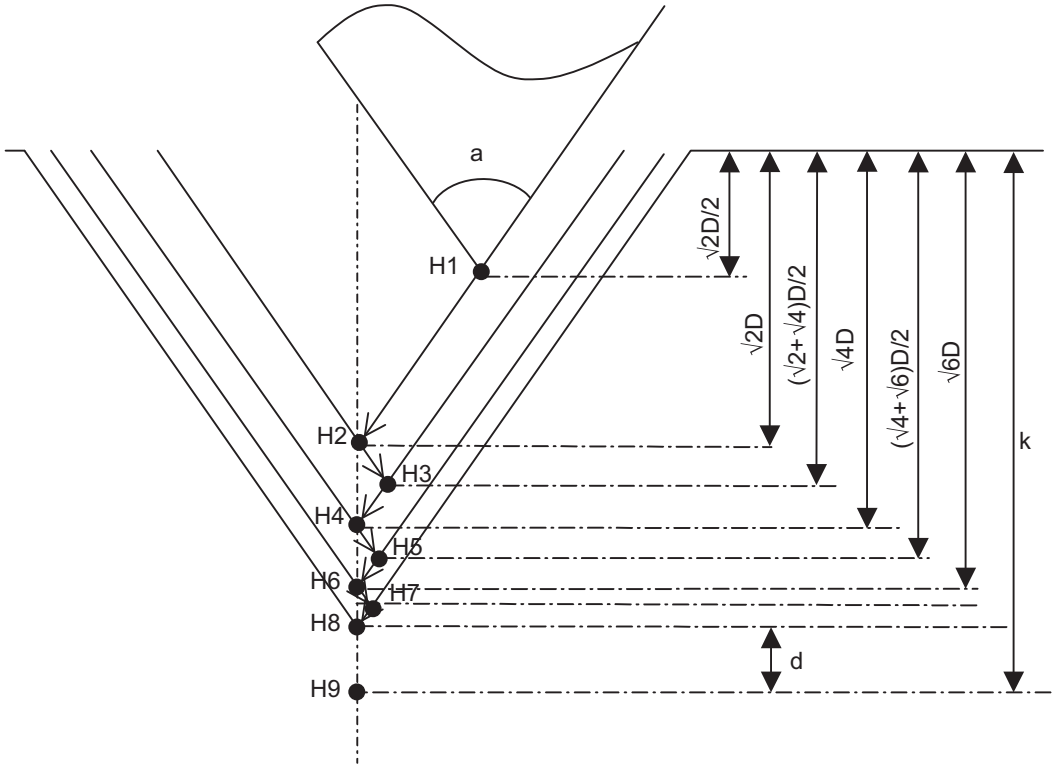


a : Thread angle
k : Thread height
d : Finishing allowance (Set by "#8057 LAST-D")
(Number of finish cuts are set by "#8058 TIMES")

The cut amount increases at a set rate.

Relational expression of cut amount

H1 = H2 * 1/2 = (√2 * D) * 1/2
H2 = √2 * D
H3 = H2 + (H4 - H2) * 1/2 = (√2 + √4) * D * 1/2
H4 = √4 * D
H5 = H4 + (H6 - H4) * 1/2 = (√4 + √6) * D * 1/2
H6 = √6 * D
:
:
Hn = (√(n-1) + √(n+1)) * Δd/2 (n = 1, 3, 5, 7, .....)
Hn = √n * Δd (n = 2, 4, 6, 8, .....)

## Restrictions and precautions

(1) Always designate P and Q in G71 to G73. A program error (P204) will occur if one or both of them are not designated.
(2) The thread cutting start shift angle is not modal. If there is no Q command with G76, this will be handled as "Q0".
(3) If a value exceeding 360.000 is command in G76 Q, a program error (P35) will occur.
(4) G76 cuts one row with one cycle. To cut two rows, change the Q value, and issue the same command.

# 13.5 Fixed Cycle for Drilling

## Function and purpose

These fixed cycles are used to perform prepared working sequences of machining programs such as positioning, hole drilling, boring and tapping in a block. When performing a same machining repeatedly, it can be executed by commanding only the axis position. The types of fixed cycles are listed below.

**Note**

(1) The X axis is designated as the hole drilling axis by fixed cycle for drilling (longitudinal direction). But the Y axis can also be designated as the hole drilling axis by using the longitudinal hole drilling axis selection function. "Type II" in the table explains details for using the longitudinal hole drilling axis selection function.

| G code | Hole drilling axis | Drilling start | Operation at hole bottom | Return operation | Retract at high speed | Usage | Type II | |
|---|---|---|---|---|---|---|---|---|
| | | | | | | | Longitudinal hole drilling axis selection signal ON/OFF | Hole drilling axis |
| G80 | - | - | - | - | - | Cancel | - | - |
| G83 | Z | Cutting feed<br>Intermittent feed | In-position check,<br>Dwell | Rapid traverse | Possible | Face deep hole drilling cycle 1 | ON | Z |
| | | | | | | | OFF | |
| G84<br>(G84.1) | Z | Cutting feed | In-position check,<br>Dwell<br>Spindle reverse rotation | Cutting feed | - | Face tapping cycle<br>(Face Reverse Tapping Cycle)<br>Pecking tapping cycle<br>Deep-hole tapping cycle | ON | Z |
| | | | | | | | OFF | |
| G85 | Z | Cutting feed | In-position check,<br>Dwell | Cutting feed | - | Face boring cycle mode | ON | Z |
| | | | | | | | OFF | |
| G87 | X | Cutting feed<br>Intermittent feed | In-position check,<br>Dwell | Rapid traverse | Possible | Longitudinal deep hole drilling cycle 1 | ON | Y |
| | | | | | | | OFF | X |
| G88<br>(G88.1) | X | Cutting feed | In-position check,<br>Dwell<br>Spindle reverse rotation | Cutting feed | - | Longitudinal tapping cycle<br>(Longitudinal reverse tapping cycle)<br>Pecking tapping cycle<br>Deep-hole tapping cycle | ON | Y |
| | | | | | | | OFF | X |
| G89 | X | Cutting feed | In-position check,<br>Dwell | Cutting feed | - | Longitudinal boring cycle mode | ON | Y |
| | | | | | | | OFF | X |
| G83.2 | Z/X | Cutting feed<br>Intermittent feed | In-position check,<br>Dwell | Rapid traverse | Possible | Deep hole drilling cycle 2 | ON | Z/X |
| | | | | | | | OFF | |
| G185 | X | Circular interpolation | - | Rapid traverse | - | Hole edge chamfering cycle | - | - |
| G187 | X/Y/Z | Cutting feed | - | Rapid traverse | - | Thread milling cycle | - | - |

A fixed cycle mode can be canceled by G80 command and other hole machining modes or G command in the 01 group. At the same time, various other data will also be set to zero.

**Note**

(1) Whether to set the reverse tapping cycle G codes to G84.1/G88.1 or G84/G88 (address D value is minus) is determined according to the MTB specifications. (parameter "#1309 Gtype").

The hole drilling axes and the positioning for the fixed cycle for drilling are shown in the outline drawing below.

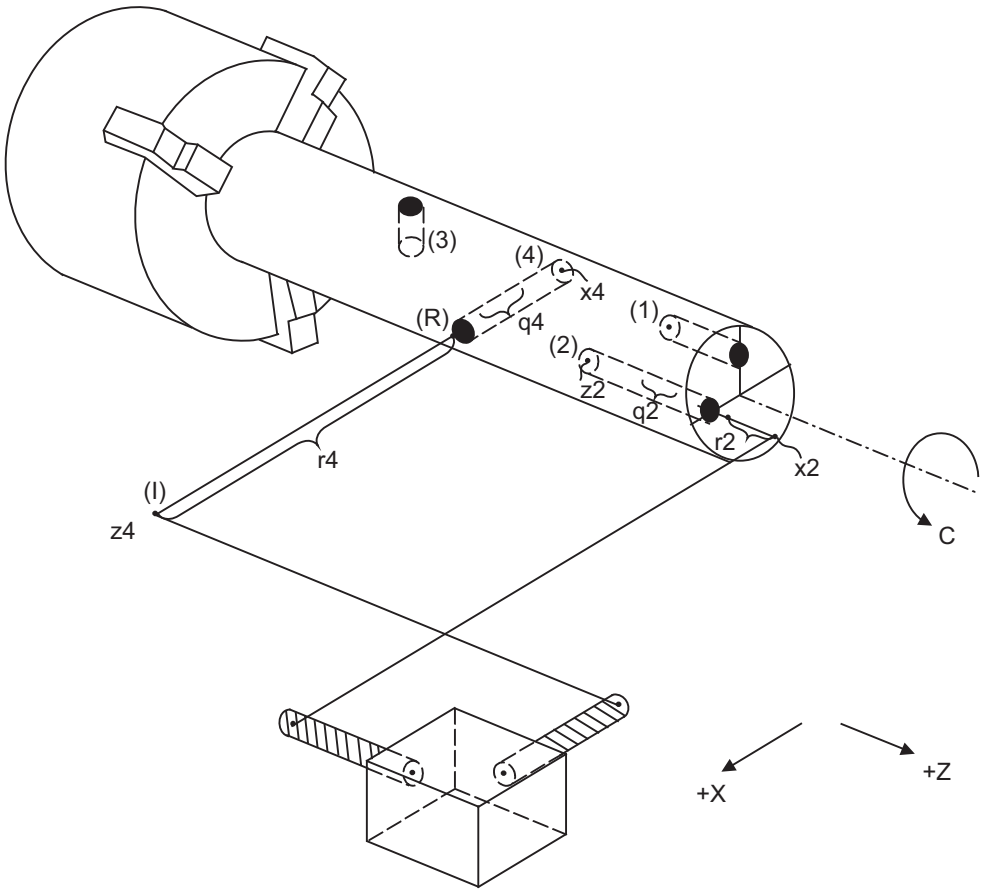


(I) Initial point (R) R point

(1) G83 Xx1 Cc1 Zz1 Rr1 Qq1 Pp1 Ff1 Kk1 ; Face deep hole drilling cycle
(2) G83 Xx2 Cc2 Zz2 Rr2 Qq2 Pp2 Ff2 Kk2 ;
(3) G87 Zz3 Cc3 Xx3 Rr3 Qq3 Pp3 Ff3 Kk3 ; Longitudinal deep hole drilling cycle
(4) G87 Zz4 Cc4 Xx4 Rr4 Qq4 Pp4 Ff4 Kk4 ;

During the hole drilling cycle, the C axis (spindle) is clamped so that it does not move.
Commands M03, M04 and M05 (forward rotation, reverse rotation and stop) operate to the rotary tools.

## Detailed description

### Basic operations of fixed cycle for drilling

The actual operation consists of the following seven movements.

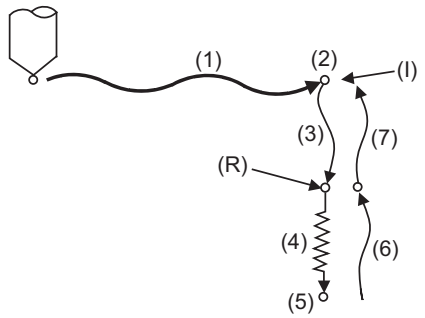


(I) Initial point (R) R point

(1) This denotes the positioning (by rapid traverse) to the X (Z) and C axis initial point.
If ",I" (Positioning axis in-position width) is designated, in-position check will be carried out after the block is completed.

(2) This will be output if the M code for C-axis clamping is issued.

(3) This denotes the positioning (by rapid traverse) to the R point.

(4) Hole machining is conducted by cutting feed.
If ",J" (Hole drilling axis in-position width) is designated, in-position check will be carried out after the block completes. Note that in case of deep drilling cycle 1 or 2, in-position check will not be carried out for hole drillings in the program. It will be carried out at designated hole bottom position (the last hole drilling).

(5) This operation takes place at the hole bottom position and it differs according to the fixed cycle modes including the rotary tool reverse rotation (M04), rotary tool forward rotation (M03) and dwell.

(6) This denotes the returning to the R point.

(7) This denotes the returning to the initial point by rapid traverse.

(Operations 6 and 7 may become a single operation depending on the fixed cycle mode.)

**Note**

- In the synchronous tapping command, the position of an in-position check will differ depending on the parameter setting.
(Refer to "13.5.2 Face Tapping Cycle (Longitudinal Tapping Cycle) / Face Reverse Tapping Cycle (Longitudinal Reverse Tapping Cycle); G84 (G88)/G84.1 (G88.1)" (General format).)
- Whether the fixed cycle is to be completed at operation 6 or 7 can be selected by G98/G99 commands. (Refer to "13.5.9 Initial Point and R Point Level Return; G98, G99".)

### Difference between absolute command and incremental command

For absolute command

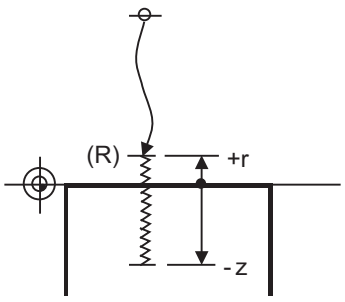


For incremental command

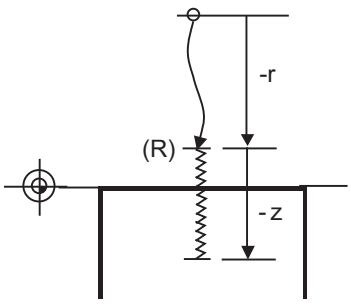


(R) R point

## 13.5.1 Face Deep Hole Drilling Cycle 1 (Longitudinal Deep Hole Drilling Cycle 1) ; G83 (G87)

### Command format

**Face deep hole drilling cycle 1**

```
G83 X/U__ C/H__ Z/W__ Rr Qq Pp Ff Kk Mm ;
```

| | |
|---|---|
| X/U C/H | Designation of hole position initial point (absolute/incremental position)<br>Data for positioning X and C axes |
| Z/W | Designation of hole bottom position (absolute/incremental position from R point) (modal) |
| Rr | Designation of R point (incremental position from initial point) (sign ignored) (modal) |
| Qq | Designation of cut amount for each cutting pass with G83 (G87). Always incremental position, radius value (sign ignored) |
| Pp | Designation of dwell time at hole bottom point (modal)<br>Relationship between time and designated value is same as for G04 designation. |
| Ff | Designation of feed rate for cutting feed (modal) |
| Kk | Designation of number of repetitions, 0 to 9999 (standard value = 1) |
| Mm | Designation of miscellaneous command<br>Basically this commands the spindle forward rotation for the M address during the asynchronous tapping of the forward tapping. The spindle reverse rotation performs false movement unless the value is set to the spindle forward rotation code + 1. |

**Longitudinal deep hole drilling cycle 1**

```
G87 Z/W__ C/H__ X/U__ Rr Qq Pp Ff Kk Mm ;
```

| | |
|---|---|
| Z/W C/H | Designation of hole position initial point (absolute/incremental position)<br>Data for positioning Z and C axes |
| X/U | Designation of hole bottom position (absolute/incremental position from R point) (modal) |
| Rr | Same as face deep hole drilling cycle 1 |
| Qq | Same as face deep hole drilling cycle 1 |
| Pp | Same as face deep hole drilling cycle 1 |
| Ff | Same as face deep hole drilling cycle 1 |
| Kk | Same as face deep hole drilling cycle 1 |
| Mm | Same as face deep hole drilling cycle 1 |

**Precautions**

(1) For the longitudinal deep hole drilling cycle 1 (G87), designate Z/W to the hole position initial point and X/U to the hole bottom position.

(2) The designation of the hole position initial point is non-modal. When G83 (G87) command is to be executed continuously, designate them block by block.

(3) Q command is non-modal. Designate them block by block.

(4) K command is non-modal. When K command is not issued, it is regarded as K1. When K0 is designated, the hole machining data are stored in the memory but no holes will be machined.

## Detailed description

### When the Q command is issued (deep hole drilling)

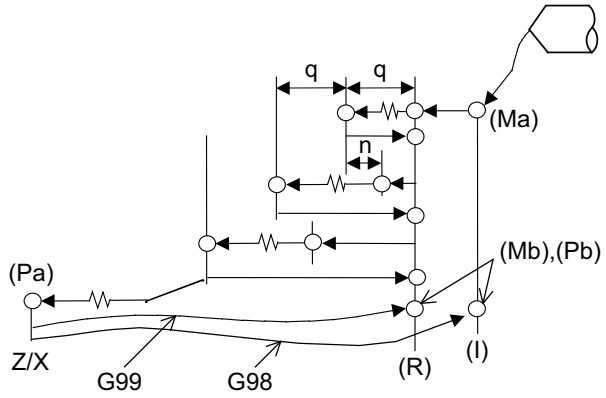


(1) Retract amount "d" is set by the parameter (#8013 G83 n). The tool returns at rapid traverse.

(2) (Ma) ... The M code (Mm) is output when there is a C-axis clamping M code command (Mm).

(3) (Mb) ... The C-axis unclamping M code (C-axis clamp M code + 1 = Mm + 1) is output when there is a C-axis clamping M code command (Mm).

(4) (Pa) ... Dwell is performed for the duration equivalent to the time designated by P.

(5) (Pb) ' ... After the C-axis unclamping M code (Mm + 2) is output, dwell is performed for the duration equivalent to the time set by the parameter (#1184 clmp_ D).

### When the Q command is not present (drilling)

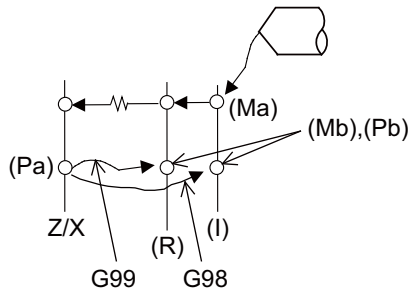


G83 (G87) X(z)__ C__ Z(x)__ R r Pp F f Kk Mm ;

See "When the Q command is present (deep hole drilling)" for details on (Ma), (Mb), (Pa), (Pb).

## Precautions

Refer to "Precautions When Using a Fixed Cycle for Drilling".

## 13.5.2 Face Tapping Cycle (Longitudinal Tapping Cycle) / Face Reverse Tapping Cycle (Longitudinal Reverse Tapping Cycle); G84 (G88)/G84.1 (G88.1)

### Command format

**Face tapping cycle**

**G84(G84.1) X/U__ C/H__ Z/W__ Rr1 Pp Ff(Ee) Kk Dd Ss1 ,Ss2 ,Rr2 Mm ;**

| | |
|---|---|
| G84(G84.1) | G84 Face tapping cycle mode<br>G84.1 Face tapping cycle mode (the tap rotation direction is reversed) |
| X/U C/H | Designation of hole position initial point (absolute/incremental position)<br>Data for positioning X and C axes |
| Z/W | Designation of hole bottom position (absolute/incremental position from R point) (modal) |
| Rr1 | Designation of R point (incremental position from initial point) (sign ignored) (modal) |
| Pp | Designation of dwell time at hole bottom point. Relationship between time and designated value is same as for G04 designation. (modal) |
| Ff | During synchronous tapping: Designation of drilling axis feed amount (tapping pitch) per spindle revolution (modal)<br>During asynchronous tapping: Designation of the feedrate for cutting feed (modal) |
| Ee | Cutting feedrate at synchronous tapping (Number of screw threads per inch)<br>If this command is issued simultaneously with the F command, the F command is valid. |
| Kk | Designation of number of repetitions, 0 to 9999 (standard value = 1) |
| Dd | Designation of spindle used in tapping cycle (modal) (Setting range: 1 to No. of spindles) |
| Ss1 | Designation of spindle rotation speed<br>(During synchronous tapping, the S command in the command format with a spindle No. (example: "S2 = 2000") is ignored.) |
| ,Ss2 | Designation of spindle rotation speed at return (Valid only during synchronous tapping mode. This setting is ignored during other modes. ) |
| ,Rr2 | Synchronization method selection (r2=1 synchronous, r2=0 asynchronous)<br>(When omitted, the mode will follow the setting of parameter "#8159 Synchronous tap") |
| Mm | Designation of miscellaneous command<br>(Basically this commands the spindle forward rotation for the M address during the asynchronous tapping of the forward tapping. The spindle reverse rotation performs false movement unless the value is set to the spindle forward rotation code + 1.) |

## Longitudinal tapping cycle

**G88(G88.1) Z/W__ C/H__ X/U__ Rr1 Pp Ff(Ee) Kk Dd Ss1 ,Ss2 ,Rr2 Mm ;**

| | |
|---|---|
| G88(G88.1) | G88 Longitudinal tapping cycle mode<br>G88.1 Longitudinal reverse tapping cycle mode (the tap rotation direction is reversed) |
| Z/W C/H | Designation of hole position initial point (absolute/incremental position)<br>Data for positioning Z and C axes |
| X/U | Designation of hole bottom position (absolute/incremental position from R point) (modal) |
| Rr1 | Same as face tapping cycle. |
| Pp | Same as face tapping cycle. |
| Ff | Same as face tapping cycle. |
| Ee | Same as face tapping cycle. |
| Kk | Same as face tapping cycle. |
| Dd | Same as face tapping cycle. |
| Ss1 | Same as face tapping cycle. |
| ,Ss2 | Same as face tapping cycle. |
| ,Rr2 | Same as face tapping cycle. |
| Mm | Same as face tapping cycle. |

### Pecking tapping cycle/deep-hole tapping cycle

**G84(G88, G84.1, G88.1) X/U__ C/H__ Z/W__ Rr1 Qq Ff (Ee) Pp Ss1 ,Ss2 ,Ii ,Jj ,Rr2 Dd Kk Mm ;**

| | |
|---|---|
| G84(G88, G84.1, G88.1) | G84 Face tapping cycle mode<br>G88 Longitudinal tapping cycle mode<br>G84.1 Face tapping cycle mode (the tap rotation direction is reversed)<br>G88.1 Longitudinal reverse tapping cycle mode (the tap rotation direction is reversed) |
| X/U C/H<br>(For G84, G84.1) | Designation of hole position initial point (absolute/incremental position)<br>Data for positioning X and C axes |
| Z/W<br>(For G84, G84.1) | Designation of hole bottom position (absolute/incremental position from R point) (modal) |
| Z/W C/H<br>(For G88, G88.1) | Designation of hole position initial point (absolute/incremental position)<br>Data for positioning Z and C axes |
| X/U<br>(For G88, G88.1) | Designation of hole bottom position (absolute/incremental position from R point) (modal) |
| Rr1 | Designation of R point (incremental position from initial point) (sign ignored) (modal) |
| Qq | Designation of cut amount for each cutting pass. Always specify this using a radius value with incremental position. (sign ignored)(modal) |
| Ff | During synchronous tapping: Designation of drilling axis feed amount (tapping pitch) per spindle revolution (modal)<br>During asynchronous tapping: Designation of the feedrate for cutting feed (modal) |
| Ee | Specify the number of tap threads per 1-inch feed of Z axis |
| Pp | Designation of dwell time at hole bottom point. Relationship between time and designated value is same as for G04 designation. (modal) |
| Ss1 | Designation of spindle rotation speed<br>(During synchronous tapping, the S command in the command format with a spindle No. (example: "S2 = 2000") is ignored.) |
| ,Ss2 | Designation of spindle rotation speed at return (Valid only during synchronous tapping mode. This setting is ignored during other modes. ) |
| ,Ii | Specify the positioning axis in-position width |
| ,Jj | Specify the drilling axis in-position width |
| ,Rr2 | Synchronization method selection (r2=1 synchronous, r2=0 asynchronous)<br>(When omitted, the mode will follow the setting of parameter "#8159 Synchronous tap") |
| Dd | Designation of spindle used in tapping cycle (modal) (Setting range: 1 to No. of spindles) |
| Kk | Designation of number of repetitions, 0 to 9999 (standard value = 1) |
| Mm | Designation of miscellaneous command<br>(Basically this commands the spindle forward rotation for the M address during the asynchronous tapping of the forward tapping. The spindle reverse rotation performs false movement unless the value is set to the spindle forward rotation code + 1.) |

**Caution**

(1) The designation of the hole position initial point is unmodal. When tapping cycle command is to be executed continuously, designate them block by block.

(2) If a value other than zero is specified to address Q when the specification for Pecking tapping cycle/Deep-hole tapping cycle is valid, either pecking or deep-hole tapping cycle is executed instead of normal tapping cycle. Which function is valid is determined according to the MTB specifications (parameter "#1272 ext08/bit4").

(3) K command is unmodal. When K command is not issued, it is regarded as K1. When K0 is designated, the hole machining data are stored in the memory but no holes will be machined.

(4) The command method for reverse tapping cycle varies depending on the MTB specifications.
When designating the reverse tapping cycle by G84/G88, set a minus value to D command.
When designating the reverse tapping cycle by G84.1/G88.1, set a positive value to D command.

(5) While multiple-spindle control II is being executed, do not issue a D command. A program error (P32) will occur if commanded.

(6) When D command is omitted, the spindle designated with the spindle selection command will be selected.

(7) ",S" command is held as a modal information. If the value of ",S" command is smaller than the spindle rotation speed, the operations depend on the MTB specifications (Whether it operates on the spindle rotation speed at the return or on the spindle rotation speed of S command is determined according to the parameter "#1241 set13/bit7" setting.)
If the spindle rotation speed is not "0" during return, the tapping retract override value "#1172 tapovr" will be invalid.
When ",S" command is omitted or when ",S0" is commanded, the value of "spindle rotation speed at return" is obtained by the following formula.

((S command value) × (setting value of the parameter "#1172 tapovr")) / 100

## Detailed description

### Normal tapping cycle (When Q is not designated)

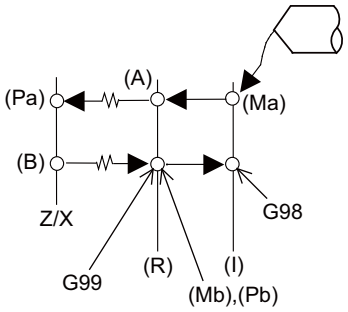


| | |
|---|---|
| (Ma) | The M code (Mm) is output when there is a C-axis clamping M code command (Mm). |
| (Mb) | The C-axis unclamping M code (C-axis clamp M code + 1 = Mm + 1) is output when there is a C-axis clamping M code command (Mm). |
| (Pa) | Dwell is performed for the duration of time commanded by P. |
| (Pb) | After the C-axis unclamping M code (Mm + 2) is output, dwell is performed for the duration of time set by the parameter (#1184 clmp_D). |
| (R) | R point |
| (I) | Initial point |

With the reverse tapping cycle G84.1 (G88.1), the tapping rotation direction is reversed.

(1) When G84(G88) is executed, the override will be canceled and automatically be set to 100%.
(2) Dry run is valid for the positioning command when the control parameter "G00 DRY RUN" is ON. If the feed hold button is pressed during G84(G88) execution, the block stops after returning operation is completed.
(3) During single block operation, the axis will not stop at the turning point of tapping cycle.
(4) During the G84 (G88) modal, the "Tapping" "NC output" signal will be output.
(5) During the G84 (G88) synchronous tapping modal, the M3, M4, S code, etc. will not be output.
(6) The tool stops at the R point and the "rotary tool forward rotation" signal is output. (A)
(7) The rotation of the rotary tool is reversed at the hole bottom and tapping is performed. (B)
(8) The fixed cycle subprograms should be edited if the rotary tool stop (M05) command is required before the "rotary tool reverse (M04)" or "forward rotation (M03)" signal is output.
(9) Whether to set the reverse tapping cycle G codes to G84.1/G88.1 or G84/G88 (address D value is minus) is determined according to the MTB specifications. (parameter "#1309 Gtype").
(10) When it is interrupted by such as the emergency stop during the tapping cycle, enable the "Tap retract" signal (TRV); a tool can be taken out from the workpiece by tap retract operation.

### Pecking Tapping Cycle (When the Q command is designated #1272 ext08/bit4=0)

In deep-hole tapping, the load applied to the tool can be reduced by designating the depth of cut per pass and cutting the workpiece by a multiple number of times.
In the 2nd and subsequent cuts, the tool retracts with reverse tap rotation by the retract distance (d) specified by parameter from the previous cut position. And then it cuts the depth (q + d) with forward tap rotation. (In G84.1/G88.1, forward tapping and reverse tapping are reversed.)
The retract amount (d) is set by the parameter "#8018 G84/G74 n". The tool returns at rapid traverse. When the parameter is "0", this becomes the normal tapping cycle.

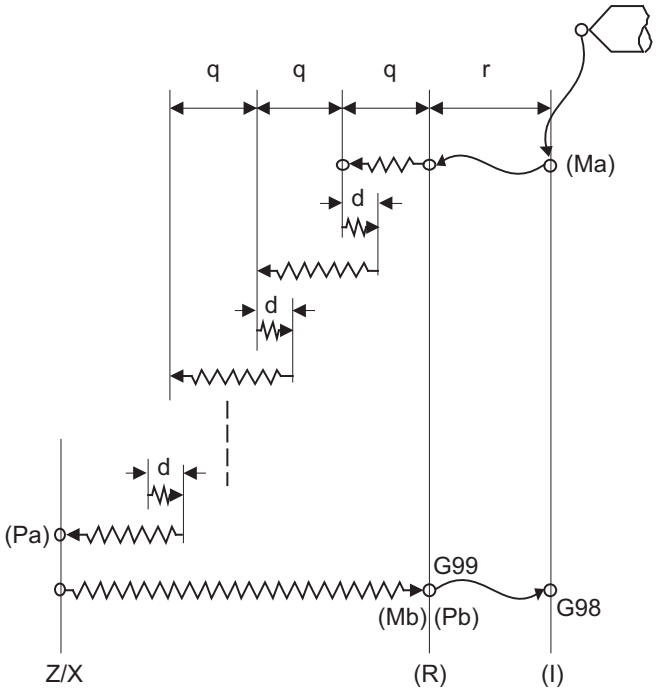


| | |
|---|---|
| (Ma) | The M code (Mm) is output when there is a C-axis clamping M code command (Mm). |
| (Mb) | The C-axis unclamping M code (C-axis clamp M code + 1 = Mm + 1) is output when there is a C-axis clamping M code command (Mm). |
| (Pa) | Dwell is performed for the duration of time commanded by P. |
| (Pb) | After the C-axis unclamping M code (Mm + 2) is output, dwell is performed for the duration of time set by the parameter (#1184 clmp_D). |
| (R) | R point |
| (I) | Initial point |
| d | Retract amount (parameter "#8018 G84/G74 n") |

(1) When G84 (G88/G84.1/G88.1) is executed, the override will be canceled and automatically be set to 100% in the cutting operation. During a pulling operation from the hole bottom to the R point, the override set in the parameter "#1172 tapovr" will be enabled. Note that, however, it will be disabled during a return operation by "return amount d".

(2) Dry run is valid for a positioning command when the parameter "#1085 G00 DRY RUN" is "1". If the feed hold button is pressed during G84 (G88) execution, the tool does not stop immediately during cutting or returning, but stops after completing an R point return.

(3) During single block operation, the tool does not stop when cutting or returning, but stops after completing an R point/initial point return.

(4) During the G84 (G88/G84.1/G88.1) mode, the "NC output" signal "Tapping" will be output.

(5) During the G84 (G88/G84.1/G88.1) synchronous tapping modal, the M3, M4, M5 and S code will not be output.

(6) Whether to set the reverse tapping cycle G codes to G84.1/G88.1 or G84/G88 (address D value is minus) is determined according to the MTB specifications. (parameter "#1309 Gtype").

(7) If the command value of F becomes extremely small such as around "F < 0.01 mm/rev" during synchronous tapping, the spindle does not rotate smoothly. So make sure to command a value larger than 0.01 mm/rev. The unit of F can be selected between mm/rev and mm/min.

(8) If the "external deceleration" signal is turned ON during synchronous or asynchronous tapping, the feed rate does not change even when deceleration conditions are satisfied.

(9) If the operation is interrupted by a cause such as an emergency stop or reset during the pecking tapping cycle, a tap retract is executed when the "tap retract" signal is input.

(10) When the "reference position return" signal is input during the pecking tapping cycle, a tap retract is carried out, and a reference position return will be executed from the end point of the tap retract.

### Deep-hole tapping cycle (When the Q command is designated #1272 ext08/bit4=1)

In deep-hole tapping, the load applied to the tool can be reduced by designating the depth of cut per pass and cutting the workpiece by a multiple number of times.
When repeating cutting by the depth of cut (q) in forward tapping, the tool is returned to the R point in reverse tapping after every cutting. (In G84.1/G88.1, forward tapping and reverse tapping are reversed.)

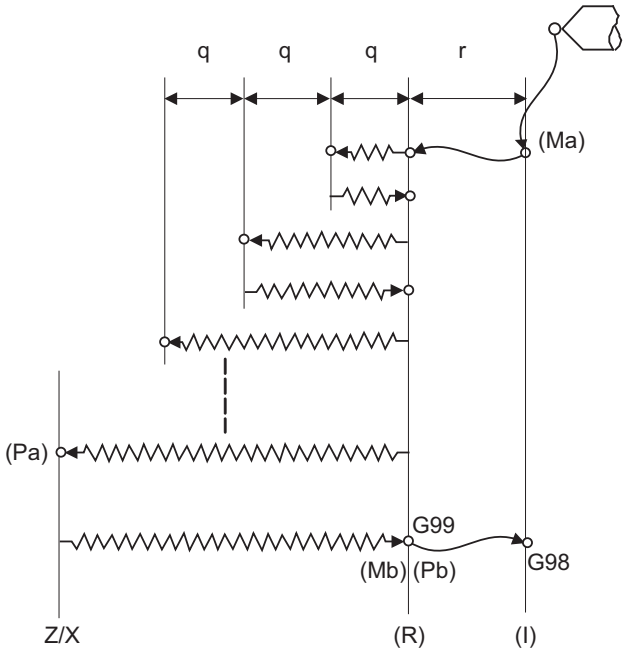


| | |
|---|---|
| (Ma) | The M code (Mm) is output when there is a C-axis clamping M code command (Mm). |
| (Mb) | The C-axis unclamping M code (C-axis clamp M code + 1 = Mm + 1) is output when there is a C-axis clamping M code command (Mm). |
| (Pa) | Dwell is performed for the duration of time commanded by P. |
| (Pb) | After the C-axis unclamping M code (Mm + 2) is output, dwell is performed for the duration of time set by the parameter (#1184 clmp_D). |
| (R) | R point |
| (I) | Initial point |

(1) When G84 (G88/G84.1/G88.1) is executed, the override will be canceled and automatically be set to 100% in the cutting operation. And the override set in the parameter "#1172 tapovr" will also be disabled.
(When "#1272 ext08/bit5" = 1, the setting of "#1172 tapovr" will be enabled only during a pulling operation)

(2) Dry run is valid for a positioning command when the parameter "#1085 G00 DRY RUN" is "1". If the feed hold button is pressed during G84 (G88) execution, the tool does not stop immediately during cutting or returning, but stops after completing an R point return.

(3) During single block operation, the tool does not stop when cutting or returning, but stops after completing an R point/initial point return.

(4) During the G84 (G88/G84.1/G88.1) mode, the "NC output" signal "Tapping" will be output.

(5) During the G84 (G88/G84.1/G88.1) synchronous tapping modal, the M3, M4, M5 and S code will not be output.

(6) Whether to set the reverse tapping cycle G codes to G84.1/G88.1 or G84/G88 (address D value is minus) is determined according to the MTB specifications. (parameter "#1309 Gtype").

(7) If the command value of F becomes extremely small such as around "F < 0.01 mm/rev" during synchronous tapping, the spindle does not rotate smoothly. So make sure to command a value larger than 0.01 mm/rev. The unit of F can be selected between mm/rev and mm/min.

(8) If the "external deceleration" signal is turned ON during synchronous or asynchronous tapping, the feed rate does not change even when deceleration conditions are satisfied.

(9) If the operation is interrupted by a cause such as an emergency stop or reset during the deep-hole tapping cycle, a tap retract is executed when the "tap retract" signal is input.

(10) When the "reference position return" signal is input during the deep-hole tapping cycle, a tap retract is carried out, and a reference position return will be executed from the end point of the tap retract.

### Precautions when commanding the tool spindle number (Dd1)

(1) The setting range of the command value is "1 to the number of available spindles". A program error (P35) will occurred if the setting value is outside the range.

(2) When multiple-spindle control II is valid, the spindle is selected from the PLC, so do not issue a Dd1 command. A program error (P32) will occur if commanded.

(3) When Dd1 command is omitted, the spindle designated with the spindle selection command will be selected.

### Synchronous/asynchronous tap selection

(1) Selecting with a program command

",R" address of tap cycle
(Tap cycle G code) Xx1 Cc1 Zz1 Rr1 Pp1 Ff(Ee) Kk1 Dd1 Ss1 ,Ss2 ,Rr2 Mm1 ;
When r2 is set to "1", the synchronous tapping mode is applied. When r2 is set to "0", the asynchronous tapping mode is applied.

(2) Selecting with parameters

User parameters

| # | Item | Details | Setting range |
|---|---|---|---|
| 8159 | Synchronous tap-ping | 0: Handles the tapping cycles as the tapping cycles with a floating tap chuck. (asynchronous tapping)<br>1: Handles the tapping cycles as the tapping cycles without a floating tap chuck. (Synchronous tap) | 0/1 |

The tapping command will be synchronous tapping cycle when this parameter is turned ON.

(3) Selecting with M function

Basic specification parameters

| # | Item | | Details | Setting range |
|---|---|---|---|---|
| 1272 (PR) | ext08 | bit1 | M-function synchronous tapping cycle valid. | 0: Invalid<br>1: Valid |

Synchronous tapping can be selected with the M function when this parameter is ON.
This parameter requires the CNC to be turned OFF after the settings. Turn the power OFF and ON to enable the parameter settings.

Basic specification parameters

| # | Item | Details | Setting range |
|---|---|---|---|
| 1513 | stapM | M code for synchronous tapping selection | 0 to 99999999 |

The synchronous tapping mode is selected with the miscellaneous function code set with this parameter.

The M function can be commanded just before or in the same block as the tapping command.

<Note>
♦Do not use M00, 01, 02, 30, 96, 97, 98 and 99.

(Example)

M29 ; (M command synchronous tapping)
G84 Z50. R20. F2.; or G84 Z50. R20. F2. M29 ;

The selection of synchronous and asynchronous tapping by the three items above will follow the combination shown below.

| | Combination | | | | | | | | | | | |
|---|---|---|---|---|---|---|---|---|---|---|---|---|
| Program command (,R0/1) | 0 | 0 | 0 | 0 | 1 | 1 | 1 | 1 | No command | | | |
| #8159 Synchronous tap | 0 | 0 | 1 | 1 | 0 | 0 | 1 | 1 | 0 | 0 | 1 | 1 |
| M function code (M**) | × | ○ | × | ○ | × | ○ | × | ○ | × | ○ | × | ○ |
| Synchronous/asynchronous selection | A | A | A | A | B | B | B | B | A | B | B | B |

× Does not command　　A Asynchronous tap

○ Commands　　B Synchronous tapping

## Canceling synchronous tapping selection

To cancel the synchronous tapping selection, command reset, G80 (fixed cycle for drilling cancel), 01 group G code or other fixed cycle G codes.

## Feed per minute command of the synchronous tapping

Enable the feed per minute command of the synchronous tapping by the setting of parameter "#1268 ext04/bit2". When this parameter is valid, G94 and G95 modal will be applied.

| | During G94 modal (feed per minute) | During G95 modal (feed per revolution) |
|---|---|---|
| #1268/bit2 = 1 | Feed per minute (*1) | Feed per revolution (*2) |
| #1268/bit2 = 0 | Feed per revolution (*2) | Feed per revolution (*2) |

(*1) The F command is set to feed per minute (mm/min, inch/min).

Pitch = F command value / S command value

(*2) The F command is set to feed per revolution (mm/rev, inch/rev).

### Note

(1) The G94 command, which is a modal command, is valid until the G95 (feed per revolution) command is issued next.

(2) If the E address (number of screw threads per inch) is issued while feed per minute is valid, the program error (P32) will occur.

(3) The F address of the synchronous tapping command does not affect the F modal for cutting feed.

## Range restriction of maximum cutting feedrate command for synchronous tapping

You can restrict the maximum value (minimum value of the E address for the number of screw threads) of the pitch F address for synchronous tapping (parameter "#19004 tap feedrate limit"). The program error (P184) will occur if the machining program is executed when the value of "F" address (pitch) exceeds the maximum value or when the value of "E" address (number of the screw threads per inch) is below the minimum value.
When the parameter "#19004" is set to "0", the pitch command by the F address is set as follows.

| Command unit | Pitch F | E setting (number of screw threads) (*1) |
|---|---|---|
| B (0.001 mm) | 0.001 to 999.999 mm/rev | 0.0255 to 999.99 screw threads/inch |
| C (0.0001 mm) | 0.0001 to 999.9999 mm/rev | 0.026 to 999.999 screw threads/inch |
| D (0.00001 mm) | 0.00001 to 999.99999 mm/rev | 0.0255 to 999.9999 screw threads/inch |
| E (0.000001 mm) | 0.000001 to 999.999999 mm/rev | 0.02541 to 999.99999 screw threads/inch |
| B (0.0001 inch) | 0.000001 to 39.370078 inch/rev | 0.03 to 9999.9999 screw threads/inch |
| C (0.00001 inch) | 0.0000001 to 39.3700787 inch/rev | 0.026 to 9999.99999 screw threads/inch |
| D (0.000001 inch) | 0.00000001 to 39.37007874 inch/rev | 0.0255 to 9999.999999 screw threads/inch |
| E (0.0000001 inch) | 0.000000001 to 39.370078740 inch/rev | 0.02541 to 9999.9999999 screw threads/inch |

(*1) When feed per minute is commanded, the pitch calculation result for the spindle rotation speed is range-restricted in this parameter setting.

### Spindle acceleration/deceleration pattern during synchronous tapping

This function enables to make spindle acceleration/deceleration pattern closer to that of the speed loop by dividing the spindle and drilling axis acceleration/deceleration pattern into up to three stages during synchronous tapping.
The acceleration/deceleration pattern can be set up to three stages for each gear.
When returning from the hole bottom, rapid return is possible at the spindle rotation speed during return. The spindle rotation speed during return is held as modal information.

(1) When tapping rotation speed < spindle rotation speed during return ≤ synchronous tapping changeover spindle rotation speed 2

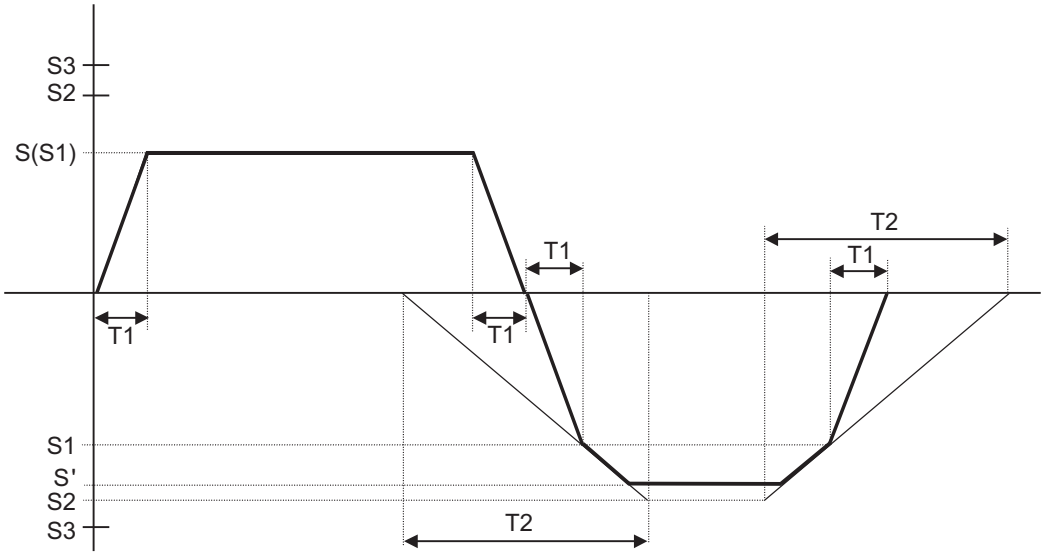


| | |
|---|---|
| S | Command spindle rotation speed |
| S' | Spindle rotation speed during return |
| S1 | Tapping rotation speed (spindle specification parameters #3013 to #3016) |
| S2 | Synchronous tapping changeover spindle rotation speed 2 (spindle specification parameters #3037 to #3040) |
| S3 | Maximum spindle rotation speed for synchronous tapping (spindle specification parameters #43046 to #43049)<br>However, when those parameters are set to "0", processing is performed based on "#3005" to "#3008". #3005 to #3008 can be designated using up to six digits (999999); however, they are limited to five digits (99999) for this function. |
| T1 | Tapping time constant (spindle specification parameters #3017 to #3020) |
| T2 | Synchronous tapping changeover time constant 2 (spindle specification parameters #3041 to #3044) |

(2) When synchronous tapping changeover spindle rotation speed 2 < spindle rotation speed during return

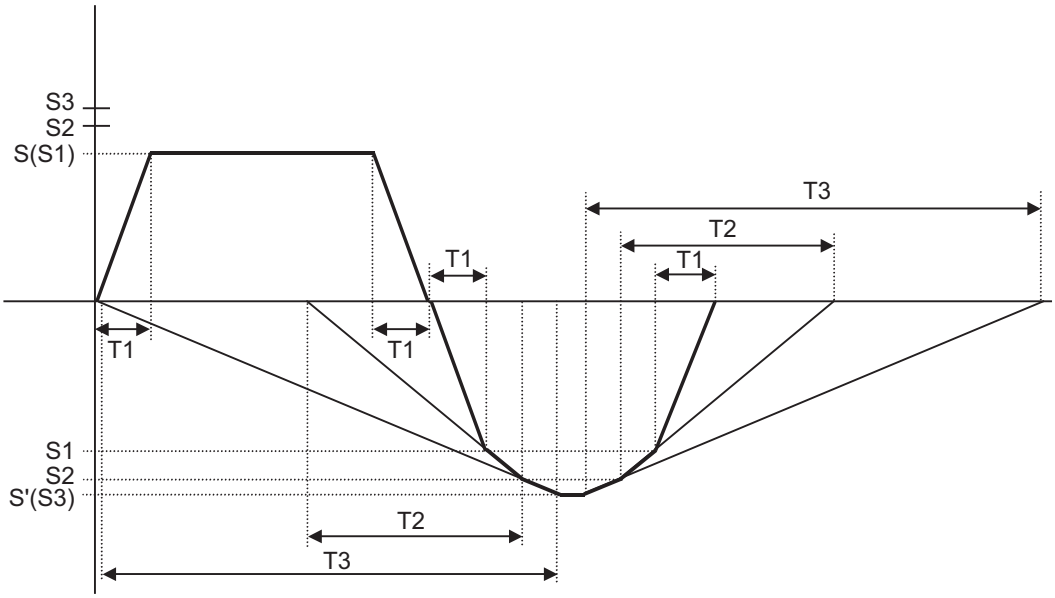


| | |
|---|---|
| S | Command spindle rotation speed |
| S' | Spindle rotation speed during return |
| S1 | Tapping rotation speed (spindle specification parameters #3013 to #3016) |
| S2 | Synchronous tapping changeover spindle rotation speed 2 (spindle specification parameters #3037 to #3040) |
| S3 | Maximum spindle rotation speed for synchronous tapping (spindle specification parameters #43046 to #43049)<br>However, when those parameters are set to "0", processing is performed based on "#3005" to "#3008". #3005 to #3008 can be designated using up to six digits (999999); however, they are limited to five digits (99999) for this function. |
| T1 | Tapping time constant (spindle specification parameters #3017 to #3020) |
| T2 | Synchronous tapping changeover time constant 2 (spindle specification parameters #3041 to #3044) |
| T3 | Synchronous tapping changeover time constant 3 (spindle specification parameters #3045 to #3048) |

### Synchronous tapping in-position check (Parameter setting values and tapping axis movement)

| #1223 aux07 | | | | "P" designation of G84/G74 command | In-position check during synchronous tapping | | |
|---|---|---|---|---|---|---|---|
| bit3 | bit4 | bit5 | bit2 | | | | |
| Synchronous tap in-position check improvement | Hole bottom | R point | I point -> R point | | Hole bottom | R point | I point -> R point |
| 0 | - | - | - | - | yes | yes | yes |
| 1 | - | - | - | No "P" designation<br>Example: G84 F1. Z-5. S1000 R-5. | no | no | no |
| 1 | 1 | 1 | 1 | "P" designation<br>Example: G84 F1. Z-5. S1000 P0 R-5. | (*1) | yes | yes |
| 1 | 1 | 0 | 1 | "P" designation<br>Example: G84 F1. Z-5. S1000 P0 R-5. | (*1) | no | yes |
| 1 | 0 | 1 | 1 | "P" designation<br>Example: G84 F1. Z-5. S1000 P0 R-5. | no | yes | yes |
| 1 | 0 | 0 | 1 | "P" designation<br>Example: G84 F1. Z-5. S1000 P0 R-5. | no | no | yes |
| 1 | 1 | 1 | 0 | "P" designation<br>Example: G84 F1. Z-5. S1000 P0 R-5. | (*1) | yes | no |
| 1 | 1 | 0 | 0 | "P" designation<br>Example: G84 F1. Z-5. S1000 P0 R-5. | (*1) | no | no |
| 1 | 0 | 1 | 0 | "P" designation<br>Example: G84 F1. Z-5. S1000 P0 R-5. | no | yes | no |
| 1 | 0 | 0 | 0 | "P" designation<br>Example: G84 F1. Z-5. S1000 P0 R-5. | no | no | no |

(*1) Carry out in-position check by tapping in-position width.

**Note**

(1) The I point refers to the initial point.

**In-position width and tapping axis movement for a synchronous tapping in-position check**

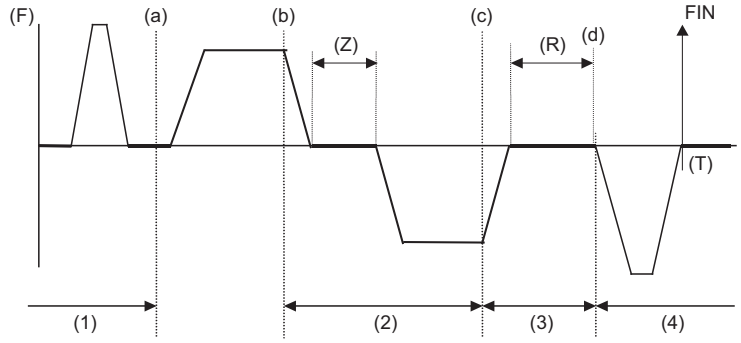


(F) Speed
(Z) Hole bottom
(T): Time
(R) R point

(a) In-position completion of the G00 feed from the R point
(b) G01 deceleration start at tapping cut-in
(c) G01 deceleration start at tapping return
(d) Start of G00 feed to the R point

(1) Section in which the in-position check is carried out by G0inps.
(2) Section in which the in-position check is carried out by TapInp.
(3) Section in which the in-position check is carried out by G1inps.
(4) Section in which the in-position check is carried out by sv024.

R point: In-position check by the G1inps

I point: In-position check by the G0inps

Hole bottom: In-position check by TapInp

**Relation between the parameter setting values and tapping axis movement for a synchronous tapping in-position check**

| #1223 aux07 | | | | Hole bottom wait time | Operation at hole bottom | Operation at R point | Operation at I point -> R point |
|---|---|---|---|---|---|---|---|
| bit3 | bit4 | bit5 | bit2 | | | | |
| Synchronous tap in-position check improvement | Hole bottom | R point | I point -> R point | | | | |
| 0 | - | - | - | Time designated by "P" Several 10 ms as processing time when no "P". | Operation determined by the settings of parameters "#1193 inpos" and "#1223 aux07/bit1" | Operation determined by the settings of parameters "#1193 inpos" and "#1223 aux07/bit1" | Operation determined by the settings of parameters "#1193 inpos" and "#1223 aux07/bit1" |
| 1 | 0 | 0 | 1 | The larger value of "P" and TapDwl (#1313) is valid. No dwell is executed if both values are "0". | Wait until time in the left column elapses. | | Wait until completion of in-position check by G0inps. |
| 1 | 0 | 1 | 1 | The larger value of "P" and TapDwl (#1313) is valid. No dwell is executed if both values are "0". | Wait until time in the left column elapses. | Wait until completion of in-position check by G1inps. | Wait until completion of in-position check by G0inps. |
| 1 | 1 | 0 | 1 | The larger value of "P" and TapDwl (#1313) is valid. No dwell is executed if both values are "0". | Wait until dwell time in the left column elapses after completion of in-position check. | | Wait until completion of in-position check by G0inps. |
| 1 | 1 | 1 | 1 | The larger value of "P" and TapDwl (#1313) is valid. Several 10 ms as processing time when both of them are "0". | Wait until dwell time in the left column elapses after completion of in-position check. | Wait until completion of in-position check by G1inps. | Wait until completion of in-position check by G0inps. |
| 1 | 0 | 0 | 0 | The larger value of "P" and TapDwl (#1313) is valid. No dwell is executed if both values are "0". | Wait until time in the left column elapses. | | |
| 1 | 0 | 1 | 0 | The larger value of "P" and TapDwl (#1313) is valid. No dwell is executed if both values are "0". | Wait until time in the left column elapses. | Wait until completion of in-position check by G1inps. | |
| 1 | 1 | 0 | 0 | The larger value of "P" and TapDwl (#1313) is valid. No dwell is executed if both values are "0". | Wait until dwell time in the left column elapses after completion of in-position check. | | |
| 1 | 1 | 1 | 0 | The larger value of "P" and TapDwl (#1313) is valid. Several 10 ms as processing time when both of them are "0". | Wait until dwell time in the left column elapses after completion of in-position check. | Wait until completion of in-position check by G1inps. | |

**Note**

(1) The I point refers to the initial point.

(2) Note that vibration or deterioration in accuracy may occur when invalidating the in-position check at R point. Confirm the accuracy when invalidating it. Processing may take some time if no in-position check is performed at each point.

### Relationship between synchronous tapping and other functions

(1) Spindle synchronization I / Spindle synchronization II / Tool spindle synchronization IA or Tool spindle synchronization IB (spindle-spindle polygon machining) / Tool spindle synchronization II (hobbing)

- The synchronous tapping spindle cannot be commanded as the reference or synchronized spindle using the functions above.
  (The operation error (M01 1007) will occur, causing the automatic operation to be paused.)
- The reference spindle used for these functions cannot be commanded for synchronous tapping. (The operation error (M01 1139) will occur, causing the automatic operation to be paused.)
- The synchronous tapping cannot be commanded for the synchronized spindle that is used in spindle synchronization I / spindle synchronization II / tool spindle synchronization IA or tool spindle synchronization IB (spindle-spindle polygon machining). (The operation error (M01 1139) will occur, causing the automatic operation to be paused.)

(2) Spindle superimposition control

- The synchronous tapping spindle cannot be commanded as the reference or superimposed spindle of the spindle superimposition control. (The operation error (M01 1007) will occur, causing the automatic operation to be paused.)
- The synchronous tapping cannot be commanded for the reference spindle that is used in the spindle superimposition control. (The operation error (M01 1131) will occur, causing the automatic operation to be paused.)

### Manual synchronous tapping

This function allows you to carry out tapping by selecting and moving the drilling axis with manual handle operation after performing block stop or feed hold stop processing during synchronous tapping cycle.
Whether to synchronize the drilling axis for manual synchronous tapping with the spindle when moving it depends on the MTB specifications. (Parameter "#11030 Man tap sync cancl")
Designate this command in the same format as for synchronous tapping.

[Operation procedure]

The following example shows the procedure when the parameter "#11030 Man tap sync cancl" is set to "0".

(1) Execute the synchronous tapping cycle program in the MDI mode.
G91 G84 X0 Y0 Z0 R0 F2. S1000;
(2) Set to the handle mode.
(3) Determine the drilling position using the X/Y axis handle.
(4) Perform drilling using the drilling axis handle.
(5) Perform pulling out from the home bottom using the drilling axis handle.
(6) When continuing machining, return to step (4).
(7) Reset the G84 modal.

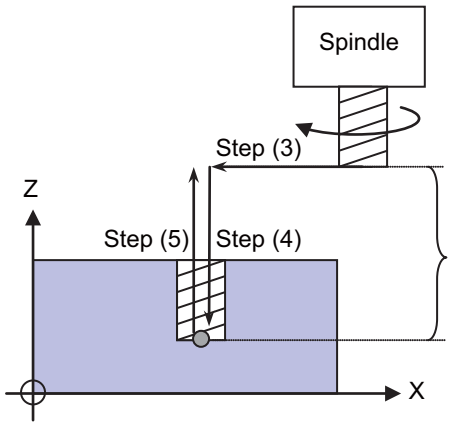


Depends on the parameter (#11030) setting.
0 (OFF): Synchronizes with the spindle (tapping).
1 (ON): Does not synchronize with the spindle (positioning).

[Precautions and restrictions]

(1) The manual synchronous tapping is only required in the handle mode.

(2) If necessary, you can perform the manual synchronous tapping using the handle after switching to another operation mode until it is reset or canceled with the G80 command.

(3) The spindle is synchronized in the pitch commanded with "F" of machining program G84 (G74).

(Example)

```
N1 G28 X0 Y0 Z0 ;
N2 G91 G01 F1000 ;
N3 G84 X-50. Y-50. Z-100. R-50. F2. S1000. ,R1 ;
N4 G80 M02 ;
```

When the handle is turned while the handle magnification is set to "100", the Z axis moves synchronously with the spindle. "2mm/rev" is set to the F2 command, so the spindle rotates by one revolution when the handle is turned by 20 pulses.

(4) For manual synchronous tapping, the acceleration/deceleration time constant is the same as for the normal handle operation. Also, the tap return override is invalid.

(5) The spindle rotation speed for manual synchronous tapping is not clamped with parameters "#3013 stap1" to "#3016 stap4" (maximum tapping rotation speed) in the S command of the program.

(6) Manual synchronous tapping becomes valid from the timing when block stop or feed hold stop mode is set during automatic operation. However, the feed hold stop mode during cutting is changed to the block stop mode after "cutting -> movement to R point".

(7) The dwell time (P command) at the hole bottom position is invalid during manual synchronous tapping.

(8) When the automatic operation is started in the miscellaneous function lock ("MST lock" ON), the spindle is not synchronized even after block stop or feed hold stop processing has been ended.

(9) The manual synchronous tapping operation in 3-dimensional coordinate conversion is different from the above. (Not supported.)

## Synchronous tapping with analog I/F spindle (analog spindle synchronous tapping)

This function performs tapping using the analog-connected spindle. By using this function, various tapping cycle functions can be used using the analog-connected spindle by inverter, etc.

When this function is used, the analog spindle with the function to control the spindle position needs to be connected. Also, the parameter "#1295 ext31/bit6" (Analog spindle synchronous tapping ON) needs to be set to "1".

The voltage value to be output to the analog spindle is between -10V and 10V and it is determined by the ratio of the commanded spindle speed of the analog spindle to the setting value of the parameters "#3001 slimit1" to "#3004 slimit4".

**[Relationship with other functions]**

(1) The following functions cannot be combined with the analog spindle synchronous tapping. If the analog spindle synchronous tapping is commanded while the following function is used, the program error (P182) occurs.
- Coordinate rotation by program
- 3-dimensional coordinate conversion
- Inclined surface machining
- Mixed control
- Arbitrary axis exchange control
- Control axis superimposition
- Arbitrary axis superimposition control
- Control axis synchronization between part systems

(2) When the reset or emergency stop is performed during the execution of the synchronous tapping with analog I/F spindle, the tap retract can be used as well as the normal synchronous tapping. However, when the emergency stop is canceled before commanding the tapping retract, the analog I/F spindle needs to be ready to rotate by a voltage command from the NC.

**[Precautions]**

(1) The pecking tapping cycle or deep-hole tapping cycle cannot be commanded while the analog spindle synchronous tapping is used. If commanded, the program error (P182) occurs.

(2) The synchronous tap with multi-step acceleration deceleration cannot be used while the analog spindle synchronous tapping is used. Command by setting the parameter "#1223 aux07/bit7" (Synchronous tap method) to "1".

(3) The high-speed synchronous tapping cannot be used while the analog spindle synchronous tapping is used. Regardless of the value of the parameter "#1281 ext17/bit5" (High-speed synchronous tapping valid), the normal synchronous tapping operation is performed.

(4) If the synchronous tapping is commanded to the analog spindle in multiple-spindle control mode when the parameter "#1295 ext31/bit6" (synchronous tapping with analog I/F spindle ON) is set to "0", the following error occurs.
In multiple-spindle control I mode: Program error (P182)
In multiple-spindle control II mode: Operation error (M01 0054)

(5) The analog spindle synchronous tapping can be used only in one part system. In multiple-spindle control mode, if the analog spindle synchronous tapping is performed in the part system other than the one designated with the parameter "#11717 astap_sysno" (Analog spindle synch tap: Part system selection), the following errors occur.
In multiple-spindle control I mode: Program error (P182)
In multiple-spindle control II mode: Operation error (M01 0054)

(6) When multiple spindles are selected using the multiple-spindle control, do not command the synchronous tapping with the analog-connected spindle and the serial-connected spindle being mixed.

(7) With the analog spindle synchronous tapping, the synchronous tapping error display function is disabled and the synchronous tapping error display always shows "0".

(8) If the reset or emergency stop is performed during analog spindle synchronous tapping, the voltage output value to the spindle becomes "0" and the spindle operation stops.

## Synchronous tapping by spindle control with pulse train output

This function performs tapping using the spindle controlled with pulse train output. By using this function, various tapping cycle functions can be used using the spindle connected to the inverter, etc.

When this function is used, the inverter, etc. which supports the function to control the spindle operation with the pulse train input needs to be connected. Also, the parameter "#1295 ext31/bit6" (Analog spindle synchronous tapping ON) needs to be set to "1".

**[Relationship with other functions]**

(1) The following functions cannot be combined with the synchronous tapping using the pulse-train output spindle. If the synchronous tapping using the pulse-train output spindle is commanded while the following function is used, the program error (P182) occurs.
♦Coordinate rotation by program

(2) When the reset or emergency stop is performed during the execution of the synchronous tapping with pulse train output, the tap retract can be used as well as the normal synchronous tapping. However, when the emergency stop is canceled before commanding the tapping retract, the connected inverter spindle needs to be ready to rotate by the pulse train output from the NC.

(3) Spindle selection can be performed for the pulse-train output spindle by multiple-spindle control. However, to use encoder input, set the pulse-train output spindle to the 1st spindle.

**[Precautions]**

(1) The pecking tapping cycle or deep-hole tapping cycle cannot be commanded for the synchronous tapping using the pulse-train output spindle. If commanded, the program error (P182) occurs.

(2) The synchronous tap with multi-step acceleration deceleration cannot be used for the synchronous tapping using the pulse-train output spindle. Regardless of the value of the parameter "#1223 aux07/bit7" (Synchronous tap method), the acceleration/deceleration operation for synchronous tapping is performed in the conventional method.

(3) The high-speed synchronous tapping cannot be used for the synchronous tapping using the pulse-train output spindle. Regardless of the value of the parameter "#1281 ext17/bit5" (High-speed synchronous tapping valid), the normal synchronous tapping operation is performed.

(4) If the synchronous tapping is commanded to the pulse-train output spindle in multiple-spindle control mode when the parameter "#1295 ext31/bit6" (synchronous tapping with analog I/F spindle ON) is set to "0", the following error occurs.
In multiple-spindle control I mode: Program error (P182)
In multiple-spindle control II mode: Operation error (M01 0054)

(5) The synchronous tapping error display function is disabled for the synchronous tapping using the pulse-train output spindle, and the synchronous tapping error display always shows "0".

(6) If the reset or emergency stop is performed during the synchronous tapping using the pulse-train output spindle, the controller stops outputting pulse signals to the spindle.

(7) For the spindle control with pulse train output, a different acceleration/deceleration control method is used at spindle rotation command and synchronous tapping, compared to the normal spindle control. Therefore, to operate a program that transitions from the spindle rotation command to the synchronous tapping command, wait until the spindle has sufficiently slowed down, and issue the synchronous tapping command.

(8) If reset is performed during forward rotation or reverse rotation of pulse-train output spindle, the pulse train will not stop being output, and the spindle remains rotated. However, if an emergency stop is performed during forward rotation or reverse rotation, the controller stops outputting pulse signals to the spindle.

### Precautions

Refer to "13.5.8 Precautions When Using a Fixed Cycle for Drilling".

#### Synchronous tapping with multiple spindles [C80]

When this specification is valid, the synchronous tapping by multiple spindles can be performed using the same command as the normal synchronous tapping command.
The validity and operation of this function depends on the MTB specifications. ("PLC" signal or each setting of multiple-spindle control functions)

## 13.5.3 Face Boring Cycle (Longitudinal Boring Cycle) ; G85 (G89)

### Command format

#### Face boring cycle mode

**G85 X/U__ C/H__ Z/W__ Rr Pp Ff Kk Mm ;**

| | |
|---|---|
| X/U C/H | Designation of hole position initial point (absolute/incremental position) |
| Z/W | Designation of hole bottom position (absolute/incremental position from R point) (modal) |
| Rr | Designation of R point (incremental position from initial point) (sign ignored) (modal) |
| Pp | Designation of dwell time at hole bottom point. Relationship between time and designated value is same as for G04 designation. (modal) |
| Ff | Designation of feedrate for cutting feed (modal) |
| Kk | Designation of number of repetitions, 0 to 9999 (standard value = 1) |
| Mm | Designation of miscellaneous command<br>Basically this commands the spindle forward rotation for the M address during the asynchronous tapping of the forward tapping. The spindle reverse rotation performs false movement unless the value is set to the spindle forward rotation code + 1. |

#### Longitudinal boring cycle mode

**G89 Z/W__ C/H__ X/U__ Rr Pp Ff Kk Mm ;**

| | |
|---|---|
| Z/W C/H | Designation of hole position initial point (absolute/incremental position) |
| X/U | Designation of hole bottom position (absolute/incremental position from R point) (modal) |
| Rr | Designation of R point (incremental position from initial point) (sign ignored) (modal) |
| Pp | Designation of dwell time at hole bottom point. Relationship between time and designated value is same as for G04 designation. (modal) |
| Ff | Designation of feedrate for cutting feed (modal) |
| Kk | Designation of number of repetitions, 0 to 9999 (standard value = 1) |
| Mm | Designation of miscellaneous command<br>Basically this commands the spindle forward rotation for the M address during the asynchronous tapping of the forward tapping. The spindle reverse rotation performs false movement unless the value is set to the spindle forward rotation code + 1. |

#### Precautions

(1) For the longitudinal boring cycle (G89), designate Z/W to the hole position initial point and X/U to the hole bottom position.

(2) The designation of the hole position initial point is unmodal. When G85(G89) command is to be executed continuously, designate them block by block.

(3) Q command is unmodal. Designate them block by block.

(4) K command is unmodal. When K command is not issued, it is regarded as K1. When K0 is designated, the hole machining data are stored in the memory but no holes will be machined.

## Detailed description

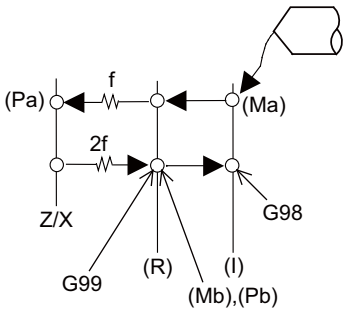


(1) See "Face Deep Hole Drilling Cycle 1; G83" for details on (Ma),(Mb),(Pa),(Pb).

(2) The tool returns to the R point at a cutting feed rate which is double the designated feed rate command. However, it does not exceed the maximum cutting feed rate.

## Precautions

Refer to "Precautions When Using a Fixed Cycle for Drilling".

## 13.5.4 Deep Hole Drilling Cycle 2; G83.2

### Function and purpose

The deep hole drilling cycle 2 drills deep holes in the X-axis or Z-axis direction by commanding the X or Z coordinate of the end point and the cut amount at cutting feed.

### Command format

**Deep hole drilling cycle 2**

| **G83.2 W/Z/U/X__ R__ I__ K__ A__ Q__ J__ F__ ;** | |
|---|---|
| W/Z/U/X | Incremental position from hole drilling start point/coordinates of hole bottom (sign valid) |
| R | Incremental position from present position up to hole drilling start point (sign ignored) (always radius value with incremental position.) |
| I | Cut amount of first cutting pass (sign ignored) (always radius value with incremental position.) |
| K | Cut amount of second and subsequent cutting passes (sign ignored) (always radius value with incremental position.) |
| A | Drill stop safety distance for second and subsequent cutting passes (sign ignored) (always radius value with incremental position.) |
| Q | Dwell time at cut point (sign ignored, decimal point invalid) |
| J | Dwell time at return point (sign ignored, decimal point invalid) |
| F | Cutting feed rate |

**Note**

(1) When A command is not issued, the parameter "#8013 G83 n" setting value is used.

(2) If the cut amount for either the first cutting pass (address "I") or the second and subsequent passes (address "K") is not designated (including a command value = 0), the one designated will be used as I = K= command value. If both commands are not designated, hole drilling will be performed down to the hole bottom at once.

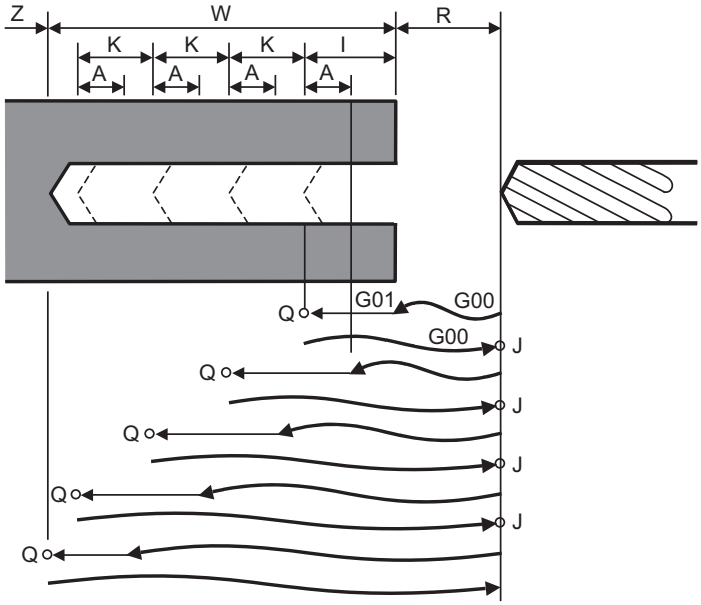


Q : Dwell time at cut point J : Dwell time at return point

With single block operation, block stops upon completion of the deep hole drilling cycle 2 commands.

## Detailed description

(1) When the axis address of the hole drilling axes is commanded several times in a block, the last address will be valid.

(2) A program error (P33) will occur in the following commands.

(a) When both hole drilling axis X (command address X or U) and hole drilling axis Z (command address Z or W) are commanded.

(b) When an axis other than X or Z (command addresses except X, U, Z and W) is commanded.

(3) When the feed hold button is pressed while the deep hole drilling cycle 2 is being executed, the automatic operation stops and the remainder of the cycle will be executed when automatic operation is restarted.

(4) When an interruption is made by manual operation while the automatic operation is stopped (manual ABS switch ON), the operation in the deep hole drilling cycle 2 modal is shifted from the automatic operation restart by an amount equivalent to the movement caused by the interrupt.

## Program example

**(when deep hole drilling cycle 2 is used as a modal command)**

| | |
|---|---|
| G28 XZ; | |
| G0 X0. Z0.; | (1) |
| G83.2 Z110.R20.I30.K20.A5.Q1000 J500 F300. ; | (2) |
| X100.; | (3) |
| X50.; | (4) |
| M02; | |

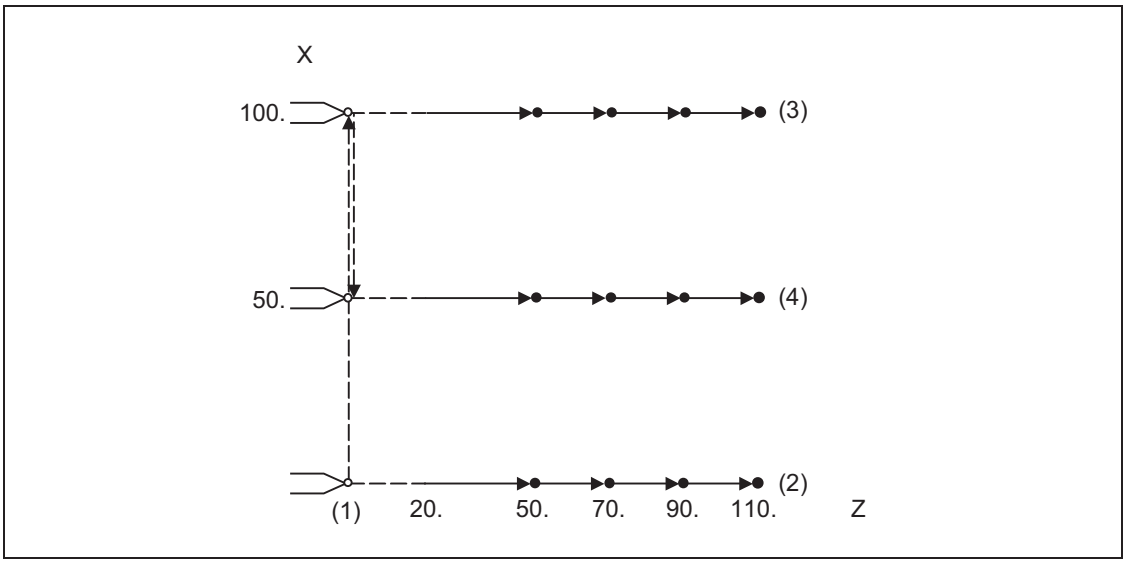


## Precautions

Refer to "13.5.8 Precautions When Using a Fixed Cycle for Drilling".

## 13.5.5 Thread Milling Cycle; G187

### Function and purpose

This function is a fixed cycle that performs thread machining by helicoidally operating the tool referred to as a thread milling tool. This function allows a thick female thread cutting or female thread cutting in any pitch that is impossible using a tapping tool.
This function is a fixed cycle using circular interpolation (helical interpolation); therefore, plane selection is required in advance.

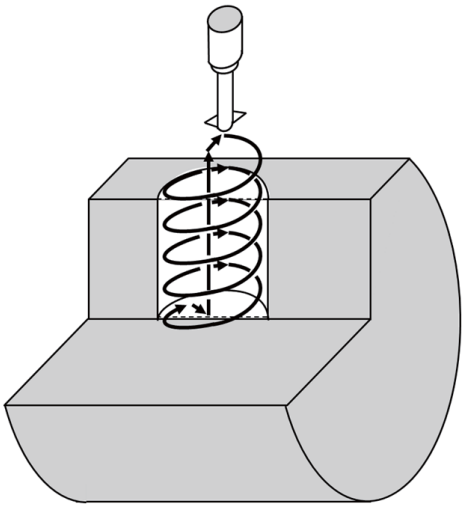

### Command format

```
G187 X/U__ J/K__ P__ F__ D__ Q__ ;
```

| | |
|---|---|
| X/U | Designation of pole bottom position |
| J/K | Arc radius, approach direction |
| P | Pitch |
| F | Feedrate |
| D | Rotation direction |
| Q | Dwell time |

## Detailed description

### Detailed address setting

| Address | Command range (unit) | Remarks |
|---|---|---|
| X/U | -99999.999 to 99999.999 (mm) | Designate the hole bottom position.<br>•If an axis other than the drilling axis is commanded or the address is omitted, a program error (P33) will occur. |
| J/K | -99999.999 to 99999.999 (mm) | Designate the arc radius and approach direction. The approach direction can be designated with the address J/K and the sign of the commanded value.<br>(Example) If "J-5" is designated, the radius and direction are obtained as shown below.<br>Arc radius: 5 (mm)<br>Approach direction: -Y direction<br>• Designate the radius for helical operation, not the hole radius.<br>•For the arc radius, designate a radius value. A program error (P33) will occur in the following cases.<br>•The drilling axis direction (I) has been designated.<br>•The command has been omitted, or two axes have been commanded simultaneously.<br>•The command value is set to "0". |
| P | 0.001 to 99999.999 (mm) | Designate the pitch (drilling axis feed amount per revolution).<br>•For the pitch, designate a radius value.<br>•If the command is omitted, a program error (P33) occurs.<br>•If the command value is set to "0", a program error (P35) occurs. |
| F | 0.001 to 10000000 (mm/min) | Designate the feedrate.<br>Designate the helical operation speed, not the cutting speed.<br>•The normal F modal value will not change.<br>•If the command is omitted or the command value is set to "0", a program error (P62) occurs.<br>•In the same way as for the normal helical interpolation, the speed designation is selected by the parameter "#1235 set07/bit0". (Based on the MTB specifications.) |
| D | 0, 1 | Designate the rotation direction.<br>0: CW<br>1: CCW<br>•If the command is omitted, the rotation direction is set to CW. |
| Q | 0 to 99999.999(s) | Designate the dwell period from the time when the axis moves from the hole center to the radius direction to the time when the helical interpolation starts.<br>•When the command is omitted, dwelling is not performed.<br>•The relationship between the time and designated value is the same as for the values designated in "G04P". |

## Operation example

The thread milling cycle runs as shown below.

(1) The axis moves (approaches) with G01 from the center of the hole to the radius direction.

(2) If the dwell time is designated, dwelling is performed.

(3) Helical interpolation is performed in the commanded pitches.

(4) After the hole bottom position has been reached, the axis moves to the center of the hole bottom with G01.

(5) Pull out the tool vertically from the center of the hole bottom with G00.

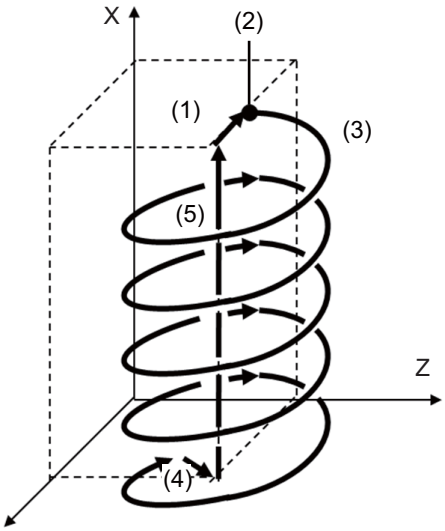


### Differences from another fixed cycle for drilling (G80 to G89)

(1) Modal/Unmodal
The thread milling cycle (G187) is unmodal, which must be commanded for each cycle.
All the data commanded with the address is also unmodal.

(2) Hole drilling axis
The drilling axis is determined by plane selection (G17, G18, or G19).
For details, refer to "Relationship between plane selection and drilling axis".

(3) Command format
The hole position and the number of repetitions cannot be designated.

(4) Operation
Positioning to the initial point or R point is not performed.
Drilling is started using the position, at which the thread milling cycle (G187) is commanded, as the center.

### Relationship between plane selection and drilling axis

The drilling axis is determined by plane selection (G17, G18, or G19).
The axis (X, Y, Z, or its parallel axis) vertical to the plane designated in G17, G18, or G19 is used as the drilling axis.
The setting of the parameter "#1080 Dril_Z" is invalid for the thread milling cycle.

| Plane selection | Hole drilling axis |
|---|---|
| G17 (X-Y) | Zp |
| G18 (Z-X) | Yp |
| G19 (Y-Z) | Xp |

Xp, Yp and Zp indicate the base axes X, Y and Z or an axis parallel to the base axis.

The command format, etc. of this function are explained, assuming that G19 (drilling axis = X axis) is designated for plane selection.

In the following usage example, finishing is carried out up to the thread top by repeating the command that increases the arc radius by degrees. Always designate the same value for the pitch (P).

```
:
N01 G00 Z30.;
N02 X45.;
N03 G19;
N04 G187 X25. K2. P5. F100 D0;
N05 G187 X25. K3. P5. F100 D0;
N06 G187 X25. K4. P5. F100 D0;
N07 G187 X25. K5. P5. F100 D0;
:
M30;
```

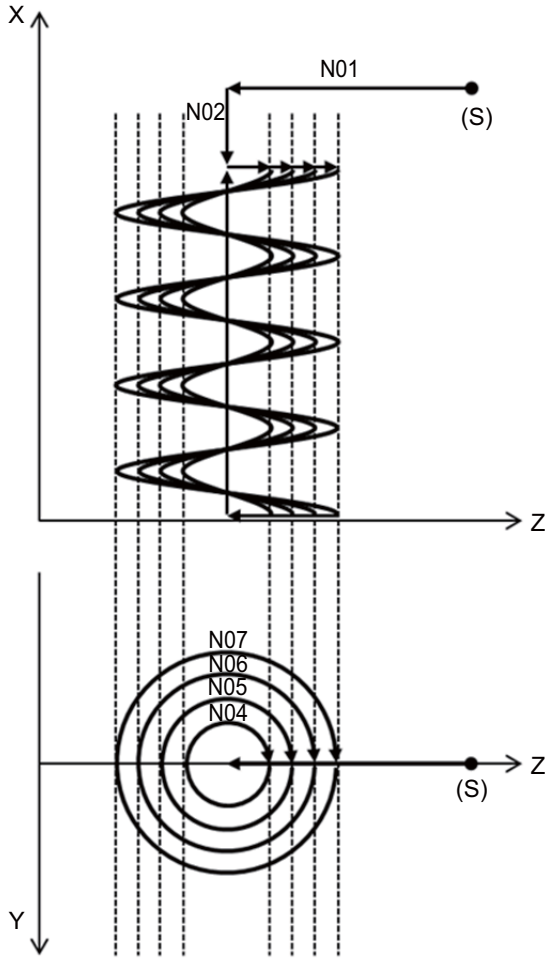


(S) Start point

### Precautions

Refer to "13.5.8 Precautions When Using a Fixed Cycle for Drilling" in addition to the following description.

(1) When a manual interruption is performed in automatic operation "pause", the end point of the interrupted block and the end point of the bock in thread milling cycle move parallel by the manual movement amount.
(The operation with the manual absolute (ABS) signal set OFF is performed during the thread milling cycle.)

## 13.5.6 Hole Edge Chamfering Cycle; G185

### Function and purpose

This function is a fixed cycle that chamfers the hole made on the longitudinal surface of the cylindrical workpiece.

By using this function, it is possible to perform chamfering with the ball end mill without using a special tool such as a chamfering tool. A chamfering tool may create uneven chamfering width. However, by chamfering with the ball end mill, it is possible to perform chamfering with a uniform width for various material diameters and hole diameters.

The cylindrical interpolation specification is required to use this function.

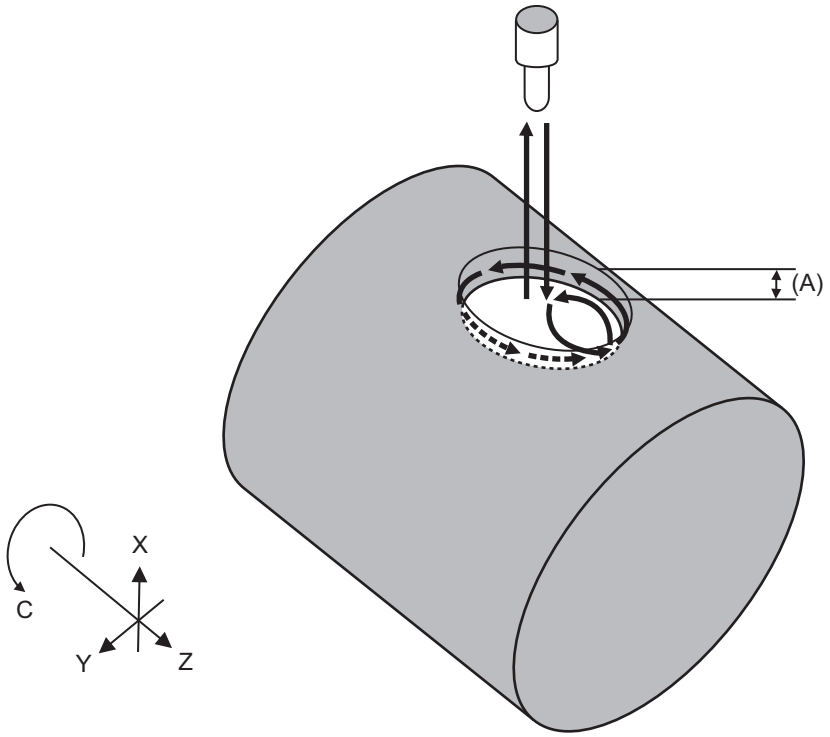


(A) Chamfering width

### Axis configuration of applicable machines

This function has restrictions on the axis configuration. The hole edge chamfering cycle is applicable to the axis configuration for a lathe with X axis, Z axis, and C axis (2 axes + 1 rotary axis) or a lathe with X axis, Z axis, C axis, and Y axis (3 axes + 1 rotary axis). If the hole edge chamfering cycle is executed outside this configuration, the program error (P188) occurs.

The specific parameter settings are as follows. (This depends on the MTB specifications.)

| | **Configured with 2 axes (X axis, Z axis) + 1 rotary axis** | **Configured with 3 axes (X axis, Z axis, Y axis) + 1 rotary axis** |
|---|---|---|
| #1026 base_ I | X | X |
| #1027 base_J | C | Y |
| #1028 base_K | Z | Z |
| #1029 aux_ I | (Blank) | (Blank) |
| #1030 aux_J | (Blank) | C |
| #1031 aux_K | (Blank) | (Blank) |

The plane of when the hole edge chamfering cycle is commanded is fixed to G19 plane.

## Command format

```
G185 Z/W__ C/H__ R__ D__ Q__ P__ J__ F__ K__ A__ E__ ;
```

| | |
|---|---|
| Z/WC/H | Designation of the hole position (absolute/incremental position) |
| R | Designation of the R point position |
| D | Cylindrical surface hole radius |
| Q | Cylindrical workpiece radius |
| P | Chamfering width |
| J | Ball end mill radius |
| F | Cutting feedrate |
| K | Number of repetitions |
| A | Pick feed amount |
| E | Chamfering count |

## Detailed description

### Detailed address setting

| Address | Command range (unit) | Content of address |
|---|---|---|
| Z/WC/H | -99999.999 to 99999.999 (mm) | ♦This is unmodal. Issue this command for each block when continuously performing the same hole drilling mode. Command Z and C to the same block.<br>♦If the command is omitted, the tool does not move to the hole position. If both the hole position and the R point position are omitted, the hole edge chamfering is not performed.<br>♦If an invalid value is commanded, the program error (P35) occurs. |
| R | -99999.999 to 99999.999 (mm) | ♦Command the incremental position from the initial point. Designate the R point position with the radius value. In the hole edge chamfering cycle, the drilling axis always runs in the negative direction regardless of whether the command value is positive or negative.<br>♦In the MITSUBISHI CNC special format, command the absolute position from the initial point. For the diameter designation axis, designate the R point position with the diameter value.<br>♦If the command is omitted, the tool does not move to the R point position. If both the hole position and the R point position are omitted, the hole edge chamfering is not performed.<br>♦If an invalid value is commanded, the program error (P35) occurs. |
| D | 0.001 to 99999.999 (mm) | ♦If the command is omitted, the program error (P33) occurs.<br>♦If an invalid value is commanded, the program error (P35) occurs. |
| Q | 0.001 to 99999.999 (mm) | ♦If the command is omitted, the program error (P33) occurs.<br>♦If an invalid value is commanded, the program error (P35) occurs. |
| P | 0.001 to 99999.999 (mm) | ♦If the command is omitted, the program error (P33) occurs.<br>♦If an invalid value is commanded, the program error (P35) occurs.<br>♦If the command value exceeds "Ball end mill radius J x 0.7", the program error (P35) occurs. |
| J | 0.001 to 99999.999 (mm) | ♦If the command is omitted, the program error (P33) occurs.<br>♦If an invalid value is commanded, the program error (P35) occurs. |
| F | 0.001 to 10000000 (mm/min) | ♦If the command is omitted, the program error (P62) occurs.<br>♦If the command value is set to "0", the program error (P62) occurs. |

| Address | Command range (unit) | Content of address |
|---|---|---|
| K | 0 to 9999 (times) | ♦Digits after the decimal point are ignored.<br>♦If the command is omitted, it is regarded that "K1" is commanded. When "K0" is commanded, the hole machining data are stored in memory; however, the hole edge chamfering is not performed. |
| A | 0.001 to 99999.999 (mm) | ♦The chamfering command method can be selected depending on the setting condition with the chamfering count "E". For details, refer to "Chamfering command method" described later.<br>♦If the command value exceeds "Ball end mill radius J x 0.7", the program error (P35) occurs. |
| E | 0 to 9999 (times) | ♦Digits after the decimal point are ignored.<br>♦The chamfering command method can be selected depending on the setting condition with the pick feed amount "A".<br>For details, refer to "Chamfering command method" described later. |

For information about checking where each address points, refer to the figure below.

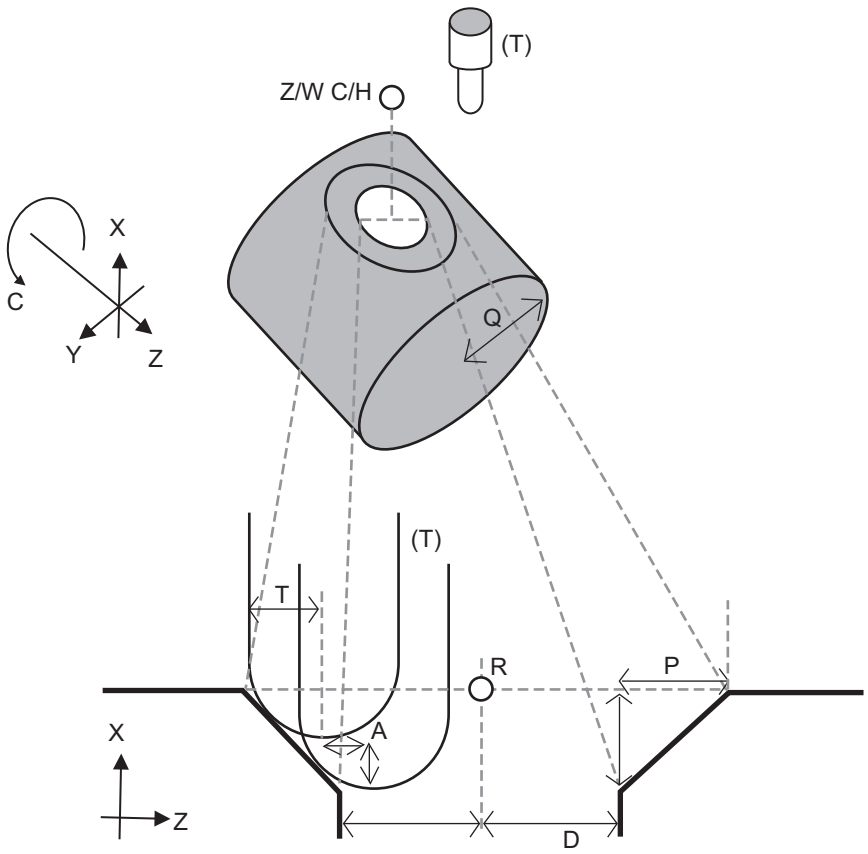


(T) Ball end mill tool

### Chamfering command method

The chamfering command method can be selected from the following three patterns depending on the setting condition of the pick feed amount "A" and the chamfering count "E".

| Setting condition | | Chamfering command method |
|---|---|---|
| Pick feed amount Address "A" | Chamfering count Address "E" | |
| ○ | × | Pick feed amount command |
| ○ | ○ | |
| × | ○ | Chamfering count command |
| × | × | Automatic setting command |

○: An arbitrary value is set.

×: The address is omitted, "0" is set, or the address command is only specified with no value setting.

(1) Pick feed amount command

This command performs chamfering with the pick feed amount set in the pick feed amount "A".
The chamfering count is automatically determined.

The larger the pick feed amount is, the smaller the chamfering count is. However, it may create burrs or uncut parts.

(2) Chamfering count command

This command performs chamfering around the circle for the chamfering count set in the chamfering count "E".
The pick feed amount is determined automatically.

(3) Automatic setting command

If neither the pick feed amount "A" nor the chamfering count "E" is set, the pick feed amount and chamfering count are set automatically.

The pick feed amount is automatically determined by the following formula using the parameter "#19424 G185 factor".

Pick feed amount A (mm) = Ball end mill radius J (mm) x G185 factor (%)

The default value of the parameter "#19424 G185 factor" is "0" (handled as 20%).

## Details of operation

The hole edge chamfering cycle runs as shown below.

| |
|---|
| **G185 Zz__ Cc__ Rr__ D__ Q__ P__ J__ F__ K__ Aa__ Ee__ ;** |

| | |
|---|---|
| (1) | Perform the positioning (by rapid traverse) to the hole position. |
| (2) | Perform the positioning (by rapid traverse) to the R point. |
| (3) | Move with cutting feed in the hole depth direction by pick feed amount a. |
| (4) | Move to the chamfering start position by the semicircular movement. |
| (5) to (8) | Execute the 1/4 circular interpolation four times to perform chamfer cutting for one circle. |
| (9) | Move to the center position of the hole by the semicircular movement. |
| (10) | Move with cutting feed in the hole depth direction by pick feed amount a. |
| (11) | Move to the chamfering start position by the semicircular movement by reducing the radius of (4) by pick feed amount a. |
| (12) to (15) | Same as steps (5) to (8). |
| (16) | Same as step (9). |
| (17) | Repeat steps (10) to (16) until the designated chamfering width is obtained. |
| (n) | Return to the R point or the initial point by rapid traverse. |

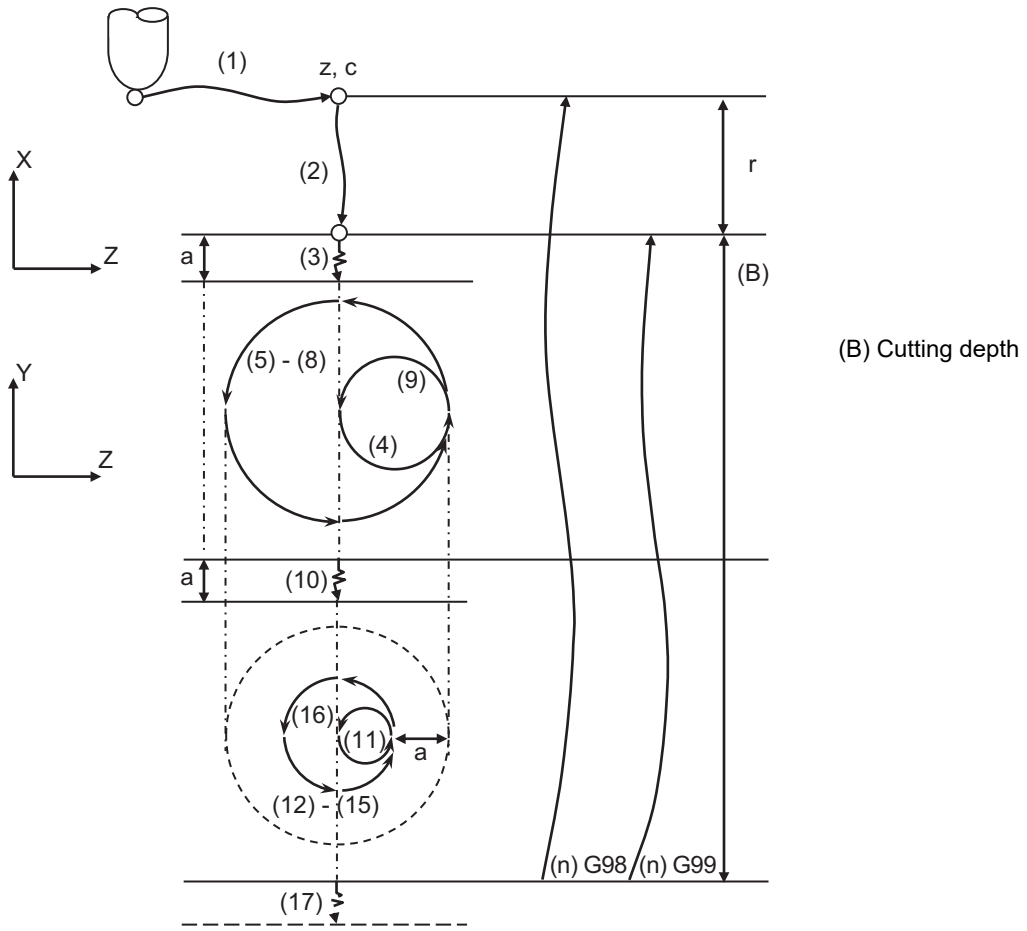


The cutting depth (B) is automatically determined by P (chamfering width) and J (ball end mill radius).
The completion position of the hole edge chamfering cycle can be switched by the G98 or G99 command.
For details, refer to "13.5.9 Initial Point and R Point Level Return; G98, G99".

### Program example

Perform chamfering (1 mm) on the hole of φ8 mm made in the cylindrical workpiece of φ40 mm. Other conditions are as follows.

- Tool used: Ball end mill R3
- X axis: Diameter value command (The parameter "#1019 dia" is set to "1".)
- Conventional format (The parameter "#1265 ext01/bit2" is set to "0".)

| | |
|---|---|
| G19; | |
| G90 G98 G00 X80.; | |
| S2=6000; | |
| G185 Z40. C0. R20. D4. Q20. P1. J3. F500. A0.5.; | Fixed cycle for drilling |
| G80; | Cancel |

[mm]

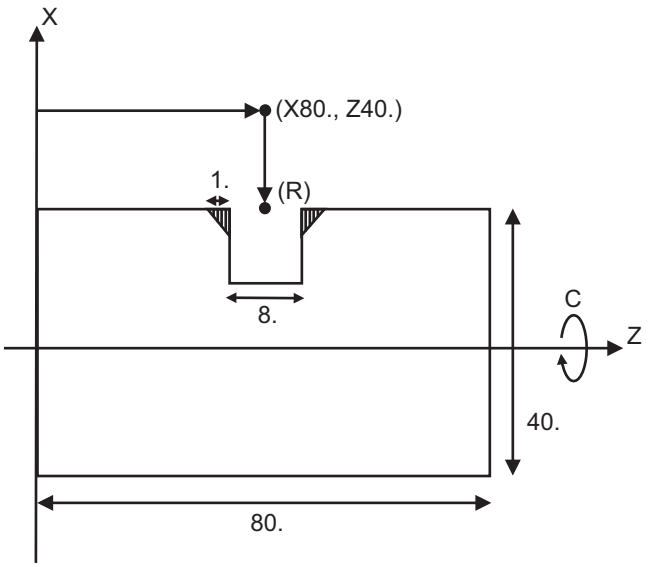


| | |
|---|---|
| Cylindrical surface hole radius | 4.0 mm |
| Cylindrical workpiece radius | 20.0 mm |
| Chamfering width | 1.0 mm |
| Ball end mill radius | 3.0 mm |
| Cutting feedrate | 500 mm/min |
| Number of repetitions | 1 time |
| Pick feed amount | 0.5 mm |
| Chamfering count | No setting |

(R) R point position

## Precautions

(1) Perform the hole edge chamfering cycle for perfect circle holes.

(2) When performing the hole edge chamfering cycle, use the ball end mill as the tool.

(3) The hole edge chamfering cycle is applicable to the axis configuration for a lathe of X axis, Z axis, and C axis (2 axes + 1 rotary axis) or a lathe of X axis, Z axis, C axis, and Y axis (3 axes + 1 rotary axis). If the hole edge chamfering cycle is executed outside this configuration, the program error (P188) occurs.

(4) The cutting direction of the ball end mill for hole edge chamfering is fixed in the negative direction for the X axis.

(5) In the hole edge chamfering cycle, cutting is performed by the circular interpolation G03 command (CCW); therefore, the tool forward rotation causes a down cutting.

(6) The chamfering angle is fixed at 45°.

(7) The cylindrical interpolation is performed in the hole edge chamfering cycle; therefore, the program error (P100) occurs if there is no specification for cylindrical interpolation.

(8) If the selected plane is not the G19 plane when the hole edge chamfering cycle command is issued, the program error (P188) occurs. Therefore, designate the G19 plane before the hole edge chamfering cycle command or in the same block.

(9) The cylindrical interpolation is performed in the hole edge chamfering cycle. Set the C axis (spindle) to the unclamped state.

(10) If the hole edge chamfering cycle is executed while the longitudinal drilling axis selection (YCD4) is ON, the program error (P188) occurs.

(11) If the hole edge chamfering cycle is executed in axis name switch, the program error (P188) occurs. Cancel the axis name switch command before use.

(12) The G185 command for the hole edge chamfering cycle can be issued when the G code list is 2, 3, 4, or 5 ("#1037 cmdtyp" = 3, 4, 5, or 6). If the command is issued when the G code list is not 2 to 5, the program error (P34) occurs.

(13) Execute the G185 command for the hole edge chamfering cycle while the milling mode is off (group 19 modal is G13.1). If the milling mode is on (group 19 modal is G12.1), the program error (P481) occurs.

(14) If the chamfering count is extremely low for the chamfering width, a lot of uncut parts will be created.
Increase the chamfering count as shown below depending on each command method of the hole edge chamfering cycle.

| | |
|---|---|
| Pick feed amount command | Decreases the command value of the pick feed amount "A". |
| Chamfering count command | Increases the command value for the chamfering count "E". |
| Automatic setting command | Decreases the value of the parameter "#19424 G185 factor". |

(15) If there are many burrs on the chamfered surface, adjust the cutting feedrate F and the rotation speed of the hole edge chamfering axis.

(16) If the "cylindrical workpiece radius Q" is the same as or smaller than the "cylindrical surface hole radius D" (Q ≤ D), it is regarded as an incorrect setting and the program error (P35) occurs.

(17) Set the command values for the chamfering width P and the pick feed amount A as follows.

"Chamfering width P" ≤ "Ball end mill radius J" x 0.7

"Pick feed amount A" ≤ "Ball end mill radius J" x 0.7

If this command value is exceeded, the chamfering width will be cut too wide, resulting in the program error (P35).

### 13.5.7 Fixed Cycle for Drilling Cancel; G80

**Detailed description**

This cancels the fixed cycle for drilling and the hole edge chamfering cycle (G185). The hole machining mode and hole machining data are both canceled.

## 13.5.8 Precautions When Using a Fixed Cycle for Drilling

**Precautions**

(1) When G84 or G88 fixed cycle is commanded, the rotary tool must be rotated to the specified direction beforehand by miscellaneous functions (M3, M4).

(2) If there is data for the basic axis, additional axis or R in the block during the fixed cycle mode, the hole drilling operation will be executed. If there is not data, the hole drilling operation will not be executed.
Note that even with X axis data, if that block is a dwell (G04) time command, the hole drilling will not be executed.

(3) Command hole machining data (Q, P (A, I, K, Q, J for G83.2)) in the block in which hole drilling is carried out (block containing data for the basic axis, additional axis or R).
The modal data is not updated if these data are commanded in blocks without hole drilling operation.

(4) The F modal may change when a reset is applied during execution of G85 (G89).

(5) The fixed cycle for drilling can also be canceled by 01 group G codes in addition to G80. If group 01 G code is commanded in the same block as the fixed cycle, the fixed cycle is ignored.

(Example)

```
G01 G83 X100. C30. Z50. R-10. Q10. P1 F100. ;
G83 G01 X100. C30. Z50. R-10. Q10. P1 F100. ;
```

In both cases, "G01 X100. C30. Z50. F100" is executed.

(6) When miscellaneous functions are commanded in the same block as fixed cycle commands, they are output simultaneously with the initial positioning.
Note that when the M code of the C axis clamp set in the parameters (#1183 clmp_M) is commanded in the same block, the M code will be output after positioning.
After returning to the return point (G98 mode: initial point/G99 mode: R point) after hole drilling, the M code of the C axis unclamp (clamp M + 1) will be output, and the axis dwells for the time set in the parameter (#1184 clmp_D).
When the number of rotations is designated, the above control will be carried out only for the first rotation, except for M codes of the C axis clamp. C axis clamp/unclamp M commands work in modal, and are output at every rotation until canceled by the fixed cycle cancel command.

(7) When tool length offset command (T function) is issued in the fixed cycle for drilling, they are executed according to the tool length offset function.

(8) A program error (P155) will occur when a fixed cycle for drilling is commanded during tool nose R compensation.

(9) For the G code lists 2,4,6, the initial point level return is fixed. The return level cannot be changed with a G98/G99 command. Note that a deferent function will be executed if G98/G99 is commanded.

(10) As shown below, in a block where the movement direction of either axis reverses, the servo system load will greatly increase, so do not command the in-position width in the machining program.

```
G0 X100. ,I10.0;
X-200.;
```

(11) If a tapping axis is under machine lock, normal synchronous tapping is applied even though high-speed synchronous tap function is enabled.

(12) When the acceleration/deceleration mode switching in drilling cycle mode is valid and the override value is set to less than 100%, the cycle time may become longer than that when the acceleration/deceleration mode switching in drilling cycle mode is invalid.

## 13.5.9 Initial Point and R Point Level Return; G98, G99

### Function and purpose

Whether to use R point or initial level as the return level in the final sequence of the fixed cycle can be selected.

### Command format

**G98; ... Initial level return**

**G99; ... R point level return**

### Detailed description

The relation of the G98/G99 mode and the number of repetition designation is as shown below. (I): Initial point, (R) R point return

| No. of hole drilling times | Program example | G98<br>(At power ON, at cancel with M02, M30, and reset button) | G99 |
|---|---|---|---|
| Only one execution | G90 G83 X100. Z-50. R25. F1000 ; | 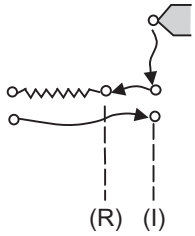 <br>Initial level return is executed. | 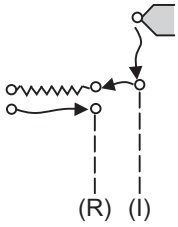 <br>R point level return is executed. |
| Two or more executions | G90 G83 X100. Z-50. R25. L5 F1000 ; | 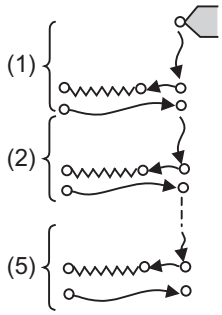 <br>Initial level return is executed for all times. | 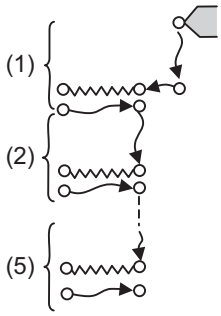 |

## 13.5.10 Setting of Workpiece Coordinates in Fixed Cycle Mode

### Function and purpose

The designated axis moves in the workpiece coordinate system set for the axis.
The Z axis becomes valid from the R point positioning after positioning is completed or from Z axis movement.

**Note**

(1) When the workpiece coordinates change, re-program the addresses Z and R, even if the values are the same.

(Example)

```
G54 Xx1 Zz1;
G83 Xx1 Zz2 Rr2 ;
G55 Xx3 Zz2 Rr2 ; ...Re-command even if Z and R are the same as the previous value.
Xx4 ;
Xx5 ;
```

## 13.5.11 Drilling Cycle High-Speed Retract

### Function and purpose

This function retracts the drill from the hole bottom at high speed in drilling machining. This helps extending the drill life by reducing the time of drilling in vain at hole bottom.

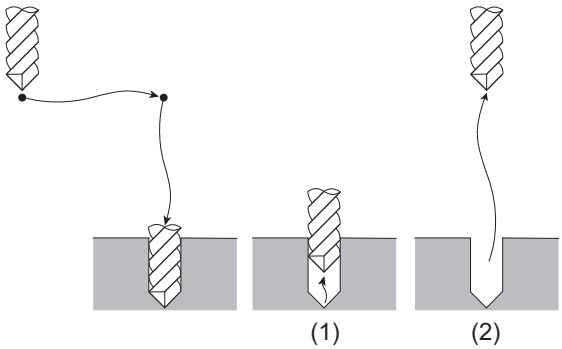


The drill moves up at high-speed ((1) in the figure) and returns to the initial point or R point in rapid traverse ((2) in the figure).

### Command format

The command format is the same as fixed cycle.

## Detailed description

(1) When "#8123 H-spd retract ON" is ON, the tool is retracted from the hole bottom at high speed using the lost motion compensation function.

(a) Set the lost motion compensation type 2 or 3 to the servo parameter. Then set the following parameters to adjust the retract amount. These parameters depend on the MTB specifications.

- #2170 Lmc1QR (Lost motion compensation gain 1 for high-speed retract)
  (corresponds to "#2216 SV016 (LMC1)" (Lost motion compensation 1))
- #2171 Lmc2QR (Lost motion compensation gain 2 for high-speed retract)
  (corresponds to "#2241 SV041 (LMC2)" (Lost motion compensation 2))

(b) When the lost motion compensation timing, lost motion compensation 3 spring constant, or lost motion compensation 3 viscous coefficient is set in addition to the ordinary lost motion compensations, its setting value depends on the MTB specifications (parameter shown below).

- #2172 LmcdQR (Lost motion compensation timing for high-speed retract)
  (correspond to "#2239 SV039 (LMCD)" (Lost motion compensation timing))
- #2173 LmckQR (Lost motion compensation 3 spring constant for high-speed retract)
  (correspond to "#2285 SV085 (LMCk)" (Lost motion compensation 3 spring constant))
- #2174 LmccQR (Lost motion compensation 3 viscous coefficient for high-speed retract)
  (correspond to "#2286 SV086 (LMCc)" (Lost motion compensation 3 viscous coefficient))

(c) If the hole drilling axis is synchronously controlled, set the same value in both parameters for master axis and slave axis.

(2) While G80 (Fixed cycle cancel) command is issued, this function will be canceled by issuing any other fixed cycle of the same group (Group 9) or any Group 1 command.

(3) This function is invalid during the following command modal:
In this case, the drill moves in the ordinary rapid traverse even if "#8123" is enabled.

- G68.1 (3-dimensional coordinate conversion)

(4) When the inclined axis control is valid and also, the hole drilling axis is an inclined axis or the basic axis of an inclined axis, a high-speed retract is not performed. The drill moves in the ordinary rapid traverse.

(5) For axes of control axis synchronization between part systems, a high-speed retract of the synchronized axis will not be performed.

## 13.5.12 Acceleration/Deceleration Mode Change in The Fixed Cycle for Drilling

### Function and purpose

This function switches the acceleration/deceleration mode for fixed cycle for drilling between the constant-gradient method and the acceleration/deceleration after interpolation.

### Command format

The command formats are the same as those of the fixed cycles G83, G87, and G83.2.

### Detailed description

With parameter "#1253 set25/bit2" (Acceleration/deceleration mode change in the fixed cycle for drilling) enabled, operation will be as follows.

(1) Acceleration/deceleration mode will be either linear or soft method. (Unless soft acceleration/deceleration is applied, the linear method will always be applied.)

(2) Operation is performed based on the parameter setting that enables the constant-gradient acceleration/deceleration after interpolation.
Acceleration/deceleration gradient for G00 (rapid traverse) is determined with "#2001 rapid" (rapid traverse rate) and "#2004 G0tL" (G0 time constant (linear)), and acceleration/deceleration gradient for G01 (cutting feed) is determined with "#2002 clamp" (cutting feedrate for clamp) and "#2007 G1tL" (G1 time constant (linear)).
Refer to "7.8 Rapid Traverse Constant-gradient Acceleration/Deceleration" or "7.9 Cutting Feed Constant-gradient Acceleration/Deceleration" for details on the constant-gradient acceleration/deceleration.

## Operation example

### Operation example of "acceleration/deceleration mode change in the fixed cycle for drilling" being enabled

The below illustrates the processes of hole-bottom deceleration check of a drilling axis following the parameter "#19417 Hole dec check 2" settings.

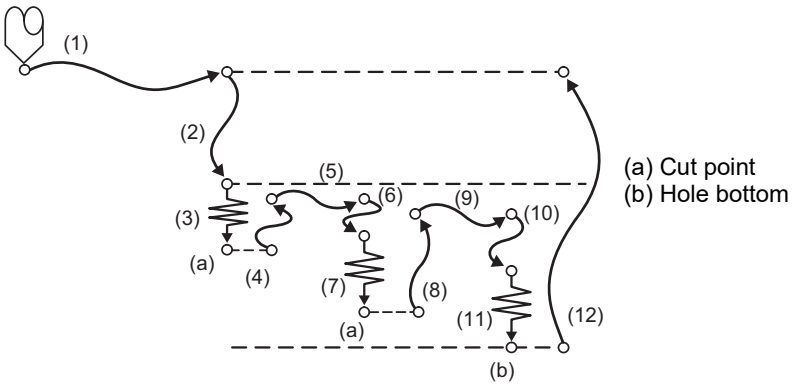


| #19417 | | G83 | G87 | G83.2 |
|---|---|---|---|---|
| 0 | (a)Cut point | Perform no deceleration check. | | |
| | (b)Hole bottom | Perform no deceleration check. | | |
| 1 | (a)Cut point | Command deceleration check | | |
| | (b)Hole bottom | Command deceleration check | | |
| 2 | (a)Cut point | Command deceleration check | | Perform in-position check (sv024). |
| | (b)Hole bottom | Perform in-position check (sv024). | | |

# 13.6 Fixed Cycle for Drilling (MITSUBISHI CNC Special Format)

## Function and purpose

These fixed cycles are used to perform prepared sequences of machining programs, such as positioning, hole drilling, boring and tapping in one block. The available machining sequences are listed in the table below.
This function is valid when the MITSUBISHI CNC special format is added ("#1265 ext01/bit2" is "1").

| G code | Hole drilling start (-Z direction) | Operation at hole bottom | | Return operation (+Z direction) | Usage |
|---|---|---|---|---|---|
| | | Dwell | Spindle | | |
| G80 | - | - | - | - | Cancel |
| G81 | Cutting feed | - | - | Rapid traverse | Drill,<br>spot drilling cycle |
| G82 | Cutting feed | Yes | - | Rapid traverse | Drill,<br>counter boring cycle |
| G83 | Intermittent feed | Yes | - | Rapid traverse | Deep Hole Drilling Cycle |
| G83.1 | Intermittent feed | Yes | - | Rapid traverse | Stepping cycle |
| G84 | Cutting feed | Yes | Reverse rotation | Cutting feed | Tapping cycle<br>Pecking tapping cycle<br>Deep-hole tapping cycle |
| G84.2 | Cutting feed | Yes | Reverse rotation | Cutting feed | Synchronous tapping cycle<br>Pecking tapping cycle<br>Deep-hole tapping cycle |
| G85 | Cutting feed | - | - | Cutting feed | Boring cycle |
| G89 | Cutting feed | Yes | - | Cutting feed | Boring cycle |
| G185 | Circular interpolation | - | - | Rapid traverse | Hole edge chamfering cycle |
| G187 | Cutting feed | - | - | Rapid traverse | Thread milling cycle |

A fixed cycle mode can be canceled by G80 command and other hole machining modes or G command in the 01 group. At the same time, various other data are also set to "0".

For the basic operations of the fixed cycle for drilling, refer to "Basic operations of fixed cycle for drilling" in "13.5 Fixed Cycle for Drilling".

## Detailed description

### Positioning plane and hole drilling axis

The fixed cycle has basic control elements for the positioning plane and hole drilling axis. The positioning plane is determined by the G17, G18 and G19 plane selection command, and the hole drilling axis is the axis perpendicular (X, Y, Z or their parallel axis) to the above plane.

| Plane selection | Positioning plane | Hole drilling axis |
|---|---|---|
| G17 (X-Y) | Xp-Yp | Zp |
| G18 (Z-X) | Zp-Xp | Yp |
| G19 (Y-Z) | Yp-Zp | Xp |

Xp, Yp and Zp indicate the basic axes X, Y and Z or an axis parallel to the basic axis.

An arbitrary axis other than the hole drilling axis can be commanded for positioning.
The hole drilling axis is determined by the axis address of the hole drilling axis commanded in the same block as G81 to G89. The basic axis will be the hole drilling axis if there is no designation.

(Example 1) When G17 (X-Y plane) is selected, and the axis parallel to the Z axis is set as the W axis.

G81 Z_ ; The Z axis is used as the hole drilling axis.
G81 W_ ; The W axis is used as the hole drilling axis.
G81 ; The Z axis is used as the hole drilling axis. (No Z or W)

**Note**

(1) Changeover of the hole drilling axis must be done with the fixed cycle canceled.
(2) A program error will occur if the hole drilling axis does not exist.

### Programmable in-position width command in fixed cycle

This commands the in-position width for commanding the fixed cycle from the machining program.
The in-position width is commanded with the", I" address is commanded to the positioning axis, and the ",J" address is commanded to the hole drilling axis.

| Address | Meaning of address | Command range (unit) | Remarks |
|---|---|---|---|
| ,I | Positioning axis in-position width (position error amount) | 1 to 999.999 (mm)<br>1 μm unit | When a value exceeding the command range is issued, a program error will occur.<br>Program error (P35) |
| ,J | Drilling axis in-position width (position error amount) | | |

### In-position check in fixed cycle

When L (number of repetitions) is designated two or more times in the fixed cycle, the commanded in-position width will be valid in the repetition block (5) to (8) below.

G81 U-50. W-50. R-50. L2 F2000 ,I0.2 ,J0.3 ;

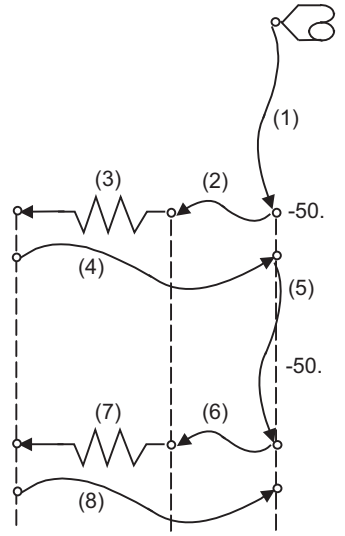


| Operation pattern | ,I | ,J |
|---|---|---|
| (1) | Valid | - |
| (2) | - | Invalid |
| (3) | - | Invalid |
| (4) | - | Valid |
| (5) | Valid | - |
| (6) | - | Invalid |
| (7) | - | Invalid |
| (8) | - | Valid |

Operation when number of repetitions L is designated

In the following machining program, the commanded in-position width is valid in the block in the figure below.
In the (B) block, the in-position width (, I) commanded regarding to positioning in the previous block (A) is invalid (5).
However, when returning from the hole bottom, the in-position width (, J) commanded in the previous block (A) is valid (8).
To validate the in-position width for positioning, command again as shown in block (C) (9).

G81 U-50. W-50. R-50. F2000 ,I0.2 ,J0.3 ;  (A)
U-10.;  (B)
U-10.,I0.2;  (C)

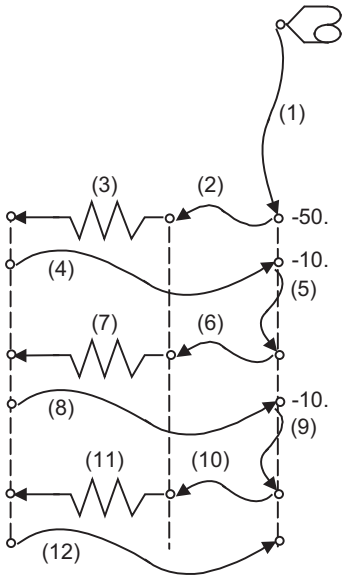


| Operation pattern | ,I | ,J |
|---|---|---|
| (1) | Valid | - |
| (3) | - | Invalid |
| | - | Invalid |
| (4) | - | Valid |
| (5) | Valid | - |
| (6) | - | Invalid |
| (7) | - | Invalid |
| (8) | - | Valid |
| (9) | Valid | - |
| (10) | - | Invalid |
| (11) | - | Invalid |
| (12) | - | Valid |

Operation in fixed cycle modal

## 13.6.1 Drilling Cycle, Spot Drilling Cycle ; G81

### Command format

| |
|---|
| **G81 Xx1(U) Zz1(W) Rr1 Ff1 Ll1 ,Ii1 ,Jj1 ;** |

| | |
|---|---|
| G81 | Drilling cycle mode, spot drilling cycle mode |
| Xx1(U) | Designation of hole position initial point (absolute/incremental position) |
| Zz1(W) | Designation of hole bottom position (absolute/incremental position from R point) |
| Rr1 | Designation of R point (incremental position from initial point) (sign ignored) |
| Ff1 | Cutting feed rate |
| Ll1 | Designation of number of repetitions (0 to 9999) |
| ,Ii1 | Positioning axis in-position width |
| ,Jj1 | In-position width for hole drilling |

### Detailed description

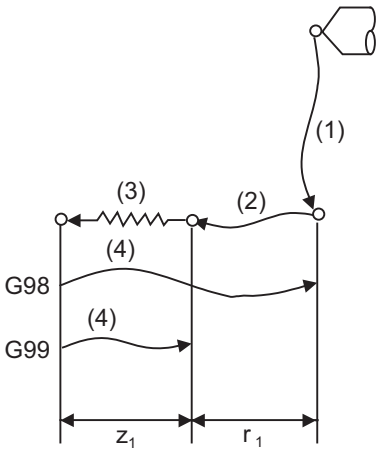


The operation stops at after the (1), (2) and (4) commands during single block operation.

| Operation pattern | i1 | j1 | Program | |
|---|---|---|---|---|
| (1) | Valid | - | G00 Xx1; | |
| (2) | - | Invalid | G00 Zr1; | |
| (3) | - | Invalid | G01 Zz1 Ff1; | |
| (4) | - | Valid | G00 Z-(z1+r1); | G98 mode |
| | | | G00 Z-z1; | G99 mode |

## 13.6.2 Drilling Cycle, Counter Boring Cycle ; G82

### Command format

| |
|---|
| **G82 Xx1(U) Zz1(W) Rr1 Ff1 Pp1 Ll1 ,Ii1 ,Jj1 ;** |

| | |
|---|---|
| G82 | Drilling cycle mode, counter boring cycle mode |
| Xx1(U) | Designation of hole position initial point (absolute/incremental position) |
| Zz1(W) | Designation of hole bottom position (absolute/incremental position from R point) |
| Rr1 | Designation of R point (incremental position from initial point) (sign ignored) |
| Ff1 | Cutting feed rate |
| Ll1 | Designation of number of repetitions (0 to 9999) |
| Pp1 | Designation of dwell time at hole bottom position (decimal points will be ignored) |
| ,Ii1 | Positioning axis in-position width |
| ,Jj1 | Drilling axis in-position width |

### Detailed description

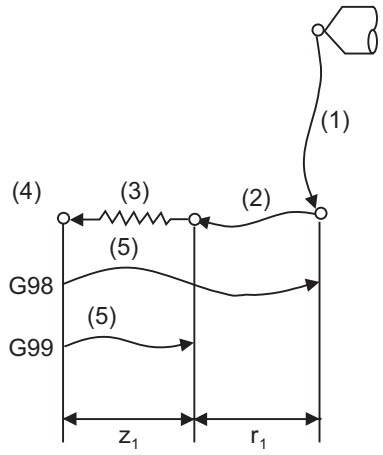


| Operation pattern | i1 | j1 | Program | |
|---|---|---|---|---|
| (1) | Valid | - | G00 Xx1; | |
| (2) | - | Invalid | G00 Zr1; | |
| (3) | - | Invalid | G01 Zz1 Ff1; | |
| (4) | - | - | G04 Pp1; | Dwell |
| (5) | - | Valid | G00 Z-(z1+r1); | G98 mode |
| | | | G00 Z-z1; | G99 mode |

The operation stops at after the (1), (2) and (5) commands during single block operation.

## 13.6.3 Deep Hole Drilling Cycle; G83

### Command format

| |
|---|
| **G83 Xx1(U) Zz1(W) Rr1 Qq1 Pp1 Ff1 Ll1 ,Ii1 ,Jj1 ;** |

| | |
|---|---|
| G83 | Deep hole drilling cycle mode |
| Xx1(U) | Designation of hole position initial point (absolute/incremental position) |
| Zz1(W) | Designation of hole bottom position (absolute/incremental position from R point) |
| Rr1 | Designation of R point (incremental position from initial point) (sign ignored) |
| Qq1 | Cut amount for each cutting pass (incremental position) |
| Pp1 | Designation of dwell time at hole bottom position (decimal points will be ignored) |
| Ff1 | Cutting feed rate |
| Ll1 | Designation of number of repetitions (0 to 9999) |
| ,Ii1 | Positioning axis in-position width |
| ,Jj1 | Drilling axis in-position width |

## Detailed description

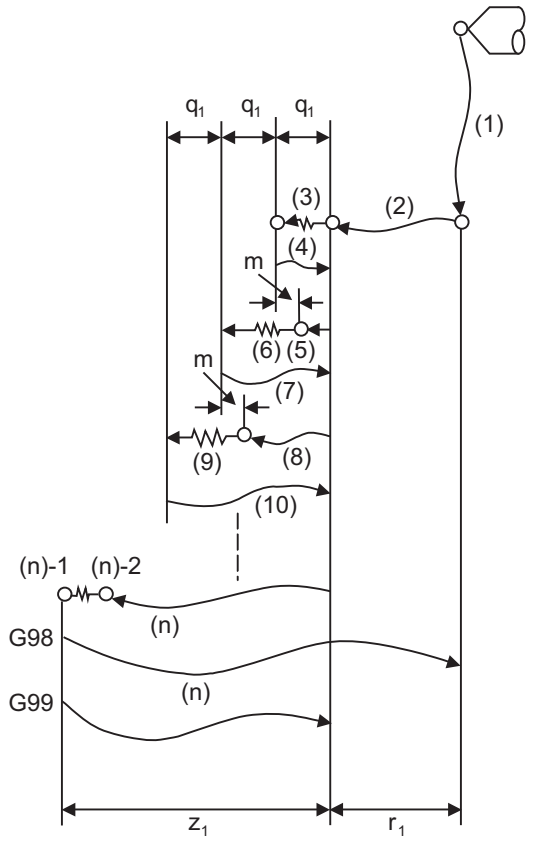


m will differ according to the parameter "#8013 G83 n". Program so that q1 > m.

| Operation pattern | i1 | j1 | Program | |
|---|---|---|---|---|
| (1) | Valid | - | G00 Xx1; | |
| (2) | - | Invalid | G00 Zr1; | |
| (3) | - | Invalid | G01 Zq1 Ff1; | |
| (4) | - | Invalid | G00 Z-q1; | |
| (5) | - | Invalid | G00 Z(q1-m); | |
| (6) | - | Invalid | G01 Z(q1+m) Ff1; | |
| (7) | - | Invalid | G00 Z -2×q1; | |
| (8) | - | Invalid | G00 Z (2×q1-m); | |
| (9) | - | Invalid | G01 Z(q1+m) Ff1; | |
| (10) | - | Invalid | G00 Z-3×q1; | |
| | : | | | |
| n-1 | - | Invalid | G04 Pp1; | Dwell |
| n | - | Valid | G00 Z-(z1+r1); | G98 mode |
| | | | G00 Z-z1; | G99 mode |

As shown above, when executing a second and the following cuttings in the G83, the movement will change from rapid traverse to cutting feed at several m[mm] before the position where the previous cutting was done. After reaching the hole bottom, the axis will return according to the G98 or G99 mode.
The operation stops at after the (1), (2) and (n) commands during single block operation.

## 13.6.4 Stepping Cycle; G83.1

### Command format

| |
|---|
| **G83.1 Xx1(U) Zz1(W) Qq1 Rr1 Ff1 Pp1 Ll1 ,Ii1 ,Jj1 ;** |

| | |
|---|---|
| G83.1 | Stepping cycle mode |
| Xx1(U) | Designation of hole position initial point (absolute/incremental position) |
| Zz1(W) | Designation of hole bottom position (absolute/incremental position from R point) |
| Qq1 | Cut amount for each cutting pass (incremental position) |
| Rr1 | Designation of R point (incremental position from initial point) (sign ignored) |
| Ff1 | Cutting feed rate |
| Pp1 | Designation of dwell time at hole bottom position (decimal points will be ignored) |
| Ll1 | Designation of number of repetitions (0 to 9999) |
| ,Ii1 | Positioning axis in-position width |
| ,Jj1 | Drilling axis in-position width |

## Detailed description

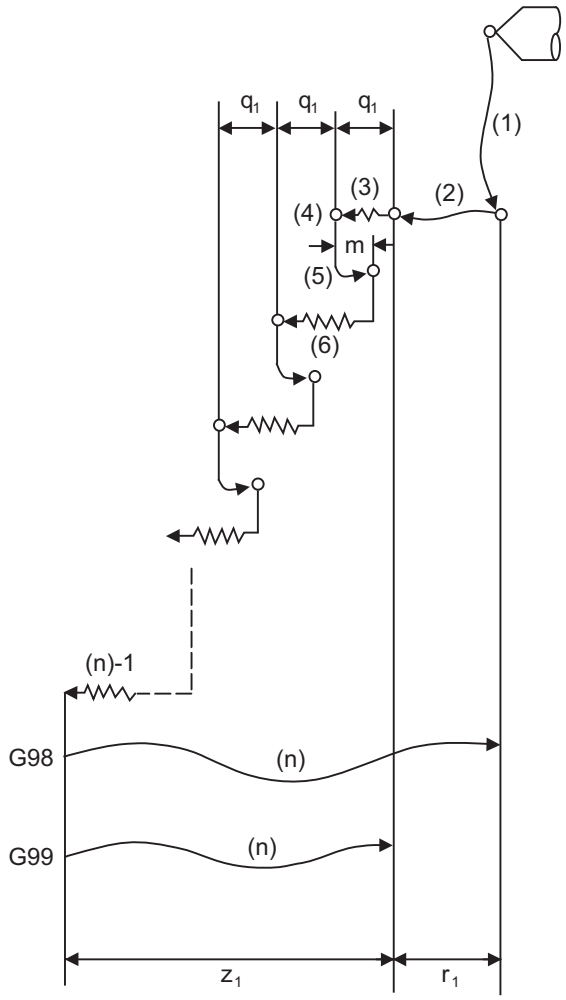


| Operation pattern | i1 | j1 | Program | |
|---|---|---|---|---|
| (1) | Valid | - | G00 Xx1; | |
| (2) | - | Invalid | G00 Zr1; | |
| (3) | - | Invalid | G01 Zq1 Ff1; | |
| (4) | - | - | G04 Pp1; | |
| (5) | - | Invalid | G00 Z-m; | |
| (6) | - | Invalid | G01 Z(q1+m) Ff1; | |
| | : | | | |
| n | - | Valid | G00 Z-(z1+r1); | G98 mode |
| | | | G00 Z-z1; | G99 mode |

As shown above, when executing a second and the following cuttings in the G83.1, the movement will return several m[mm] at rapid traverse and then change to cutting feed. The return amount m will differ according to the parameter "#8012 G73 n".
The operation stops at after the (1), (2) and (n) commands during single block operation.

## 13.6.5 Tapping Cycle; G84

### Command format

| |
|---|
| **G84 Xx1(U) Zz1(W) Rr1 Qq1 Ff1 Pp1 Ll1 ,Ii1 ,Jj1 ;** |

| | |
|---|---|
| G84 | Tapping cycle mode |
| Xx1(U) | Designation of hole position initial point (absolute/incremental position) |
| Zz1(W) | Designation of hole bottom position (absolute/incremental position from R point) |
| Rr1 | Designation of R point (incremental position from initial point) (sign ignored) |
| Qq1 | Designation of cut amount for each cutting pass with G83 (G87). Always specify this using a radius value with incremental position. (sign ignored) |
| Ff1 | Cutting feed rate |
| Pp1 | Designation of dwell time at hole bottom position (decimal points will be ignored) |
| Ll1 | Designation of number of repetitions (0 to 9999) |
| ,Ii1 | Positioning axis in-position width |
| ,Jj1 | Drilling axis in-position width |

If a value other than zero is specified to address Q when specifications are available for pecking tapping cycle or deep-hole tapping cycle, either pecking or deep-hole tapping cycle is executed instead of normal tapping cycle.

## Detailed description

### Normal tapping cycle (When Q is not designated)

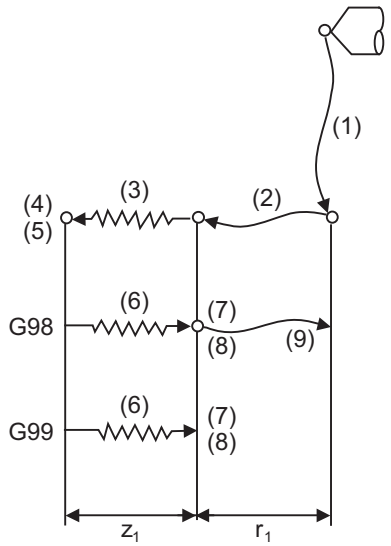


| Operation pattern | i1 | j1 | Program | |
|---|---|---|---|---|
| (1) | Valid | - | G00 Xx1; | |
| (2) | - | Invalid | G00 Zr1; | |
| (3) | - | Invalid | G01 Zq1 Ff1; | |
| (4) | - | - | G04 Pp1; | |
| (5) | - | - | M4; | Spindle reverse rotation |
| (6) | - | Invalid | G01 Z-z1 Ff1; | |
| (7) | - | - | G04 Pp1; | |
| (8) | - | - | M3; | Spindle forward rotation |
| (9) | - | Valid | G00 Z-r1; | G98 mode |
| | | | No movement | G99 mode |

When G84 is being executed, the override will be canceled and the override will automatically be set to 100%. Dry run is valid for the positioning command when the control parameter "#1085 G00 DRY RUN" is ON. If the feed hold button is pressed during G84 execution, the movement will not stop immediately, and instead, will stop after (6) during sequences (3) to (6). During the rapid traverse in sequence (1), (2) and (9), the movement will stop immediately.
The operation stops at after the (1), (2) and (9) commands during single block operation.
During the G84 modal, the "Tapping" NC output signal will be output.
During the G84 synchronous tapping modal, the M3, M4, M5 and S code will not be output.

The feedrates for tapping retract are as follows.

| G94/G95 | Control parameter F1-digit value | F command value | Feed designation |
|---|---|---|---|
| G94 | OFF | F designation | Feed per minute |
| | ON | Other than F0 to F8 | |
| | | F0 to F8 (no decimal point) | F1-digit feed |
| G95 | - | F designation | Feed per revolution |

- is irrelevant to the setting

### Pecking tapping cycle (When the Q command is designated #1272 ext08/bit4=0)

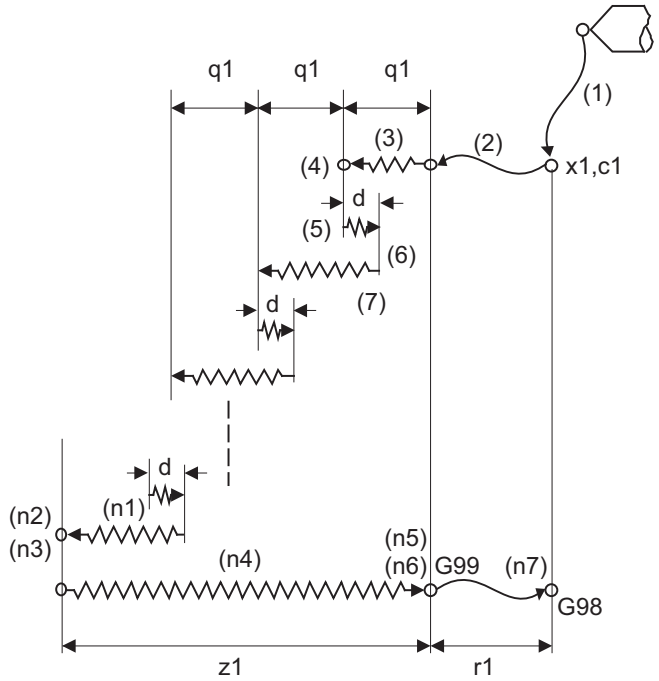


| Operation pattern | i1 | j1 | Program | |
|---|---|---|---|---|
| (1) | Valid | - | G00 Xx1 Cc1 ,Ii1; | |
| (2) | - | Invalid | G00 Zr1; | |
| (3) | - | Invalid | G01 Zq1 Ff1; | |
| (4) | - | - | M4; | Spindle reverse rotation |
| (5) | - | Invalid | G01 Z-d Ff1; | |
| (6) | - | - | M3; | Spindle forward rotation |
| (7) | - | Invalid | G01 Z(q1+d) Ff1; | |
| : | | | | |
| (n1) | - | Invalid | G01 Z(z1-q1*n) Ff1; | |
| (n2) | - | - | G04 Pp1; | |
| (n3) | - | - | M4; | |
| (n4) | - | Invalid | G01 Z-z1 Ff1; | |
| (n5) | - | - | G04 Pp1; | |
| (n6) | - | - | M3; | |
| (n7) | - | Valid | G00 Z-r1 ,Ij1; | G98 mode |
| | | | No movement | G99 mode |

When G84 is being executed, the override will be canceled and the override will automatically be set to 100%. During a pulling operation from the hole bottom to the R point, the override set in the parameter "#1172 tapovr" will be enabled. Note however, it will be disabled during a return operation by the return amount d. Set the return amount d in the parameter "#8018 G84/G74 n".

Dry run is valid when for a positioning command the parameter "#1085 G00 DRY RUN" is "1".

If the feed hold button is pressed during G84 execution, the operation stops immediately during a rapid traverse feed of (1), (2) and (n7). For (3) to (n4), however, the operation will not stop immediately, but will stop after (n4) is completed.

The operation stops in the positions where the commands (1), (2) and (n7) are completed during single block operation.

During the G84 modal, the "Tapping" NC output signal will be output.

When the command value of Q is "0", this command is treated as a normal tapping cycle.

### Deep-hole tapping cycle (When the Q command is designated #1272 ext08/bit4=1)

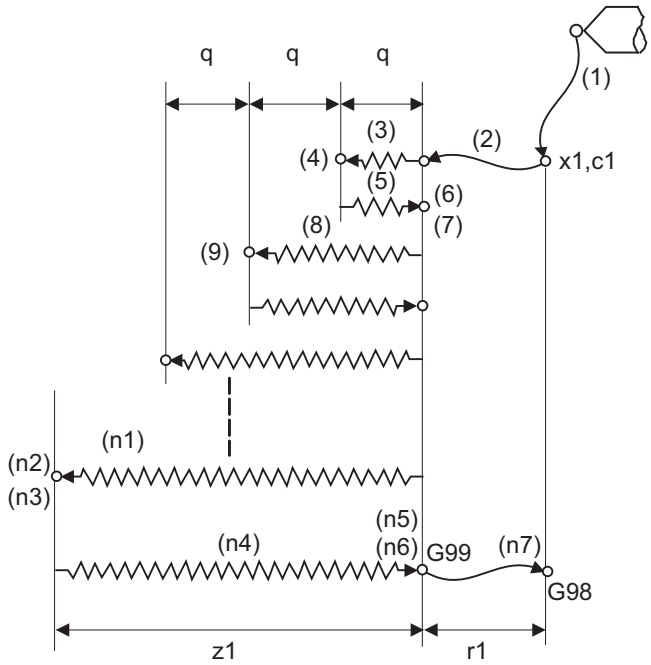


| Operation pattern | i1 | j1 | Program | |
|---|---|---|---|---|
| (1) | Valid | - | G00 Xx1 Cc1; | |
| (2) | - | Invalid | G00 Zr1; | |
| (3) | - | Invalid | G01 Zq1 Ff1; | |
| (4) | - | - | M4; | Spindle reverse rotation |
| (5) | - | Invalid | G01 Z-q1 Ff1; | |
| (6) | - | - | G04 Pp1; | |
| (7) | - | - | M3; | Spindle forward rotation |
| (8) | - | Invalid | G01 Z(2*q1)Ff1; | |
| (9) | - | - | | |
| : | | | | |
| (n1) | - | Invalid | G01 Zz1 Ff1; | |
| (n2) | - | - | G04 Pp1; | |
| (n3) | - | - | M4; | |
| (n4) | - | Invalid | G01 Z-z1 Ff1; | |
| (n5) | - | - | G04 Pp1; | |
| (n6) | - | - | M3; | |
| (n7) | - | Valid | G00 Z-r1; | G98 mode |
| | | | No movement | G99 mode |

When G84 is being executed, the override will be canceled and the override will automatically be set to 100%.
The override set in the parameter "#1172 tapovr" is also disabled.
Dry run is valid when for a positioning command the parameter "#1085 G00 DRY RUN" is "1".
If the feed hold button is pressed during G84 execution, the operation stops immediately during a rapid traverse feed of (1), (2) and (n7). For (3) to (n4), however, the operation will not stop immediately, but will stop after (n4) is completed.
The operation stops in the positions where the commands (1), (2) and (n7) are completed during single block operation.
During the G84 modal, the "Tapping" NC output signal will be output.
When the command value of Q is "0", this command is treated as a normal tapping cycle.

## 13.6.6 Synchronous Tapping Cycle ; G84.2

### Command format

**G84.2 Xx1(U) Zz1(W) Rr1 Qq1 Ff1 Pp1 Ll1 Ss1 ,Ss2 ,Ii1 ,Jj1 ;**

| | |
|---|---|
| G84.2 | Synchronous tapping cycle mode |
| Xx1(U) | Designation of hole position initial point (absolute/incremental position) |
| Zz1(W) | Designation of hole bottom position (absolute/incremental position from R point) |
| Rr1 | Designation of R point (incremental position from initial point) (sign ignored) |
| Qq1 | Designation of cut amount for each cutting pass with G83 (G87). Always specify this using a radius value with incremental position. (sign ignored) |
| Ff1 | Cutting feed rate |
| Pp1 | Designation of dwell time at hole bottom position (decimal points will be ignored) |
| Ll1 | Designation of number of repetitions (0 to 9999) |
| Ss1 | Spindle rotation speed |
| ,Ss2 | Designation of spindle rotation speed at return |
| ,Ii1 | Positioning axis in-position width |
| ,Jj1 | Drilling axis in-position width |

If a value other than zero is specified to address Q when specifications are available for pecking tapping cycle or deep-hole tapping cycle, either pecking or deep-hole tapping cycle is executed instead of normal tapping cycle.

## Detailed description

### Normal tapping cycle (When Q is not designated)

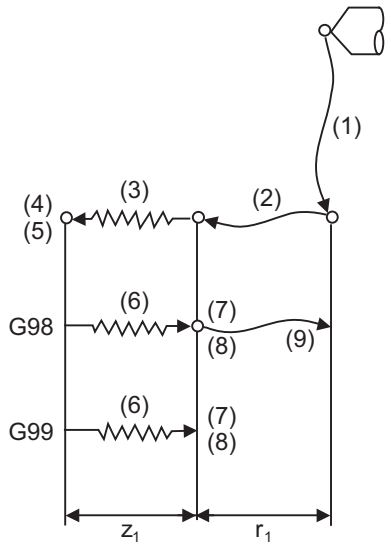


| Operation pattern | i1 | j1 | Program | |
|---|---|---|---|---|
| (1) | Valid | - | G00 Xx1; | |
| (2) | - | Invalid | G00 Zr1; | |
| (3) | - | Invalid | G01 Zq1 Ff1; | |
| (4) | - | - | G04 Pp1; | |
| (5) | - | - | M4; | Spindle reverse rotation |
| (6) | - | Invalid | G01 Z-z1 Ff1; | |
| (7) | - | - | G04 Pp1; | |
| (8) | - | - | M3; | Spindle forward rotation |
| (9) | - | Valid | G00 Z-r1; | G98 mode |
| | | | No movement | G99 mode |

When G84.2 is being executed, the override will be canceled and the override will automatically be set to 100%. Dry run is valid for the positioning command when the control parameter "G00 DRY RUN" is ON. If the feed hold button is pressed during G84.2 execution, the movement will not stop immediately, and instead, will stop after (6) during sequences (3) to (6). During the rapid traverse in sequence (1), (2) and (9), the movement will stop immediately.
The operation stops at after the (1), (2) and (9) commands during single block operation.
During the G84.2 modal, the "Tapping" NC output signal will be output.
During the G84.2 synchronous tapping modal, the M3, M4, M5 and S code will not be output.

This function enables to make spindle acceleration/deceleration pattern closer to that of the speed loop by dividing the spindle and drilling axis acceleration/deceleration pattern into up to three stages during synchronous tapping.
The acceleration/deceleration pattern can be set up to three stages for each gear.
When returning from the hole bottom, rapid return is possible at the spindle rotation speed during return. The spindle rotation speed during return is held as modal information.

The feedrates for tapping retract are as follows.

| Address | Meaning of address | Command range (unit) | Remarks |
|---|---|---|---|
| ,S | Spindle rotation speed during return | 0 to 99999 (r/min) | The data is held as modal information.<br>If the value of ",S" command is smaller than the spindle rotation speed, the operations depend on the MTB specifications (determined by the parameter "#1241 set13/bit 7", retracts at either the spindle rotation speed during return or the spindle rotation speed of the S command.)<br>If the spindle rotation speed is not "0" during return, the tapping retract override value "#1172 tapovr" will be invalid.<br>When ",S" command is omitted or when ",S0" is commanded, the value of "spindle rotation speed at return" is obtained by the following formula.<br>((S command value) × (setting value of the parameter "#1172 tapovr")) / 100 |

## Pecking tapping cycle (When the Q command is designated #1272 ext08/bit4=0)

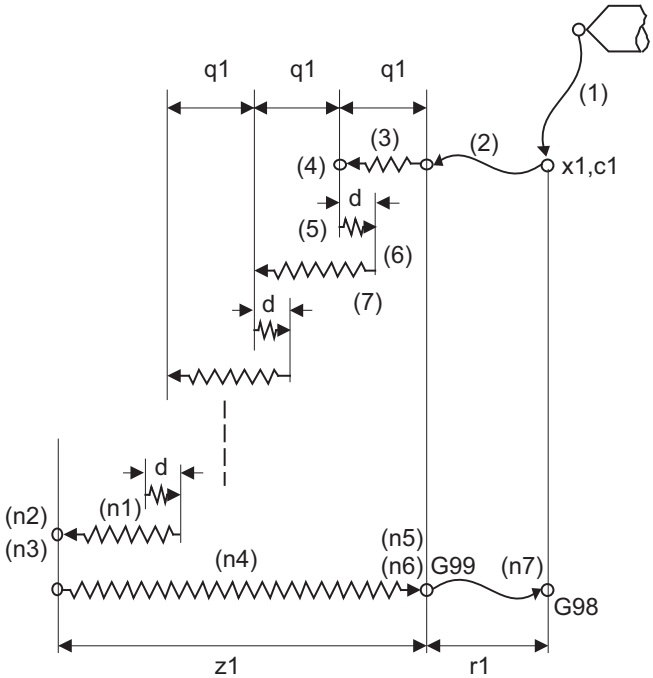


| Operation pattern | i1 | j1 | Program | |
|---|---|---|---|---|
| (1) | Valid | - | G00 Xx1 Cc1 ,Ii1; | |
| (2) | - | Invalid | G00 Zr1; | |
| (3) | - | Invalid | G01 Zq1 Ff1; | |
| (4) | - | - | M4; | Spindle reverse rotation |
| (5) | - | Invalid | G01 Z-d Ff1; | |
| (6) | - | - | M3; | Spindle forward rotation |
| (7) | - | Invalid | G01 Z(q1+d) Ff1; | |
| : | | | | |
| (n1) | - | Invalid | G01 Z(z1-q1*n) Ff1; | |
| (n2) | - | - | G04 Pp1; | |
| (n3) | - | - | M4; | |
| (n4) | - | Invalid | G01 Z-z1 Ff1 Ss2; | |

| Operation pattern | i1 | j1 | Program | |
|---|---|---|---|---|
| (n5) | - | - | G04 Pp1; | |
| (n6) | - | - | M3; | |
| (n7) | - | Valid | G00 Z-r1 ,Ij1; | G98 mode |
| | | | No movement | G99 mode |

When G84.2 is being executed, the override will be canceled and the override will automatically be set to 100%.
During a pulling operation from the hole bottom to the R point, the override set in the parameter "#1172 tapovr" will be enabled. Note however, it will be disabled during a return operation by the return amount d. Set the return amount d in the parameter "#8018 G84/G74 n".
Dry run is valid when for a positioning command the parameter "#1085 G00 DRY RUN" is "1".
If the feed hold button is pressed during G84.2 execution, the operation stops immediately during a rapid traverse feed of (1), (2) and (n7). For (3) to (n4), however, the operation will not stop immediately, but will stop after (n4) is completed.
The operation stops in the positions where the commands (1), (2) and (n7) are completed during single block operation.
During the G84.2 modal, the "Tapping" NC output signal will be output.
During the G84.2 synchronous tapping mode, the M3, M4, M5, or S code will not be output.
When the command value of Q is "0", this command is treated as a normal tapping cycle.

## Deep-hole tapping cycle (When the Q command is designated #1272 ext08/bit4=1)

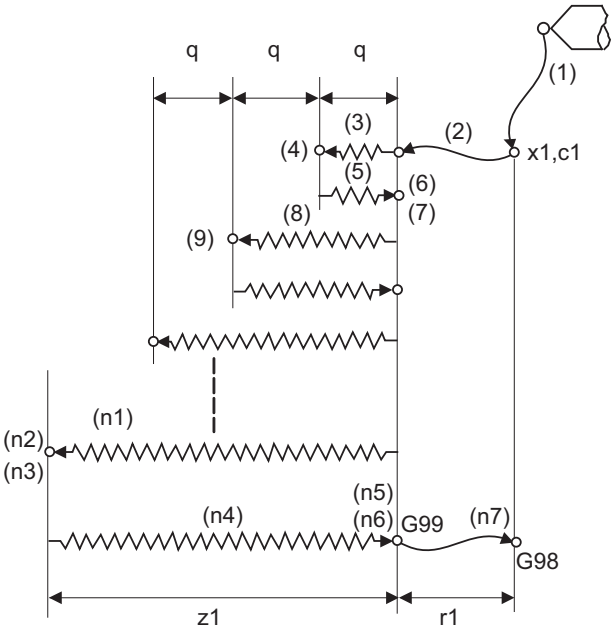


| Operation pattern | i1 | j1 | Program | |
|---|---|---|---|---|
| (1) | Valid | - | G00 Xx1 Cc1; | |
| (2) | - | Invalid | G00 Zr1; | |
| (3) | - | Invalid | G01 Zq1 Ff1; | |
| (4) | - | - | M4; | Spindle reverse rotation |
| (5) | - | Invalid | G01 Z-q1 Ff1; | |
| (6) | - | - | G04 Pp1; | |
| (7) | - | - | M3; | Spindle forward rotation |
| (8) | - | Invalid | G01 Z(2*q1)Ff1; | |
| (9) | - | - | | |
| : | | | | |
| (n1) | - | Invalid | G01 Zz1 Ff1; | |
| (n2) | - | - | G04 Pp1; | |
| (n3) | - | - | M4; | |
| (n4) | - | Invalid | G01 Z-z1 Ff1; | |
| (n5) | - | - | G04 Pp1; | |

| Operation pattern | i1 | j1 | Program | |
|---|---|---|---|---|
| (n6) | - | - | M3; | |
| (n7) | - | Valid | G00 Z-r1; | G98 mode |
| | | | No movement | G99 mode |

When G84.2 is being executed, the override will be canceled and the override will automatically be set to 100%.
The override set in the parameter "#1172 tapovr" is also disabled.
Dry run is valid when for a positioning command the parameter "#1085 G00 DRY RUN" is "1".
If the feed hold button is pressed during G84.2 execution, the operation stops immediately during a rapid traverse feed of (1), (2) and (n7). For (3) to (n4), however, the operation will not stop immediately, but will stop after (n4) is completed.
The operation stops in the positions where the commands (1), (2) and (n7) are completed during single block operation.
During the G84.2 modal, the "Tapping" NC output signal will be output.
During the G84.2 synchronous tapping mode, the M3, M4, M5, or S code will not be output.
When the command value of Q is "0", this command is treated as a normal tapping cycle.

### Spindle acceleration/deceleration pattern during synchronous tapping

Refer to "13.5.2 Face Tapping Cycle (Longitudinal Tapping Cycle) / Face Reverse Tapping Cycle (Longitudinal Reverse Tapping Cycle); G84 (G88)/G84.1 (G88.1)" (General format).

### In-position check during synchronous tapping

Refer to "13.5.2 Face Tapping Cycle (Longitudinal Tapping Cycle) / Face Reverse Tapping Cycle (Longitudinal Reverse Tapping Cycle); G84 (G88)/G84.1 (G88.1)" (General format).

## 13.6.7 Boring Cycle ; G85

### Command format

| |
|---|
| **G85 Xx1(U) Zz1(W) Rr1 Ff1 Ll1 ,Ii1 ,Jj1 ;** |

| | |
|---|---|
| G85 | Boring cycle mode |
| Xx1(U) | Designation of hole position initial point (absolute/incremental position) |
| Zz1(W) | Designation of hole bottom position (absolute/incremental position from R point) |
| Rr1 | Designation of R point (incremental position from initial point) (sign ignored) |
| Ff1 | Cutting feed rate |
| Ll1 | Designation of number of repetitions (0 to 9999) |
| ,Ii1 | Positioning axis in-position width |
| ,Jj1 | Drilling axis in-position width |

### Detailed description

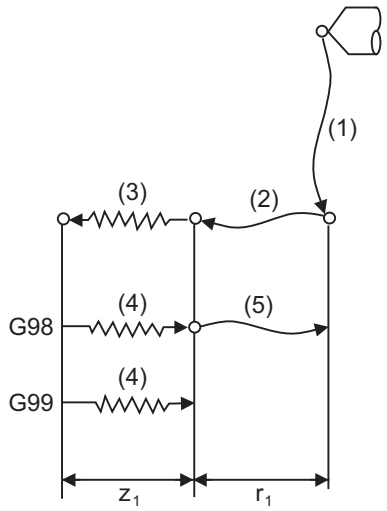


| Operation pattern | i1 | j1 | Program | |
|---|---|---|---|---|
| (1) | Valid | - | G00 Xx1; | |
| (2) | - | Invalid | G00 Zr1; | |
| (3) | - | Invalid | G01 Zq1 Ff1; | |
| (4) | - | Invalid | G01 Z-z1 Ff1; | |
| (5) | - | Valid | G00 Z-r1; | G98 mode |
| | | | No movement | G99 mode |

The operation stops at after the (1), (2), (4) or (5) commands during single block operation.

## 13.6.8 Boring Cycle ; G89

### Command format

| |
|---|
| **G89 Xx1(U) Zz1(W) Rr1 Ff1 Pp1 Ll1 ,Ii1 ,Jj1 ;** |

| | |
|---|---|
| G89 | Boring cycle mode |
| Xx1(U) | Designation of hole position initial point (absolute/incremental position) |
| Zz1(W) | Designation of hole bottom position (absolute/incremental position from R point) |
| Rr1 | Designation of R point (incremental position from initial point) (sign ignored) |
| Ff1 | Cutting feed rate |
| Pp1 | Designation of dwell time at hole bottom position (decimal points will be ignored) |
| Ll1 | Designation of number of repetitions (0 to 9999) |
| ,Ii1 | Positioning axis in-position width |
| ,Jj1 | Drilling axis in-position width |

### Detailed description

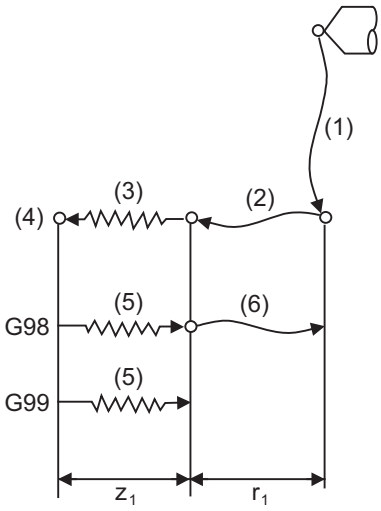


| Operation pattern | i1 | j1 | Program | |
|---|---|---|---|---|
| (1) | Valid | - | G00 Xx1; | |
| (2) | - | Invalid | G00 Zr1; | |
| (3) | - | Invalid | G01 Zq1 Ff1; | |
| (4) | - | - | G04 Pp1; | |
| (5) | - | Invalid | G01 Z-z1 Ff1; | |
| (6) | - | Valid | G00 Z-r1; | G98 mode |
| | | | No movement | G99 mode |

The operation stops at after the (1), (2), (5) or (6) commands during single block operation.

### 13.6.9 Hole Edge Chamfering Cycle; G185

Refer to "13.5.6 Hole Edge Chamfering Cycle; G185".

## 13.6.10 Precautions on Using The Fixed Cycle for Drilling (MITSUBISHI CNC Special Format)

**Precautions**

(1) Before commanding the fixed cycle, the spindle must be rotated to a specific direction by a miscellaneous function (M3 or M4).

(2) If there is data for the basic axis, additional axis or R in the block during the fixed cycle mode, the hole drilling operation will be executed. If there is no data, the hole drilling operation will not be executed.
Note that even when the X axis data exists, the hole will not be drilled if the data is a dwell (G04) time command.

(3) Command the hole machining data (Q, P) in the block where hole drilling is executed. (Block containing data on basic axis, additional axis or R)

(4) The fixed cycle can be canceled by the G00 to G03 or G33 command besides the G80 command. If these are designated in the same block as the fixed cycle, the following will occur.

m=00 to 03, 33
n = Fixed cycle for drilling
Gm Gn X Z R Q P L F ;

Gm: Executed
Gn: Ignored
X Z: Executed
R Q P L: Ignored
F: Memorized

Note that for the G02 and G03 commands, R will be handled as the circular radius.

(5) If an M function is commanded in the same block as the fixed cycle command, the M code and MF will be output during the initial positioning. The axis will move to the next operation with FIN (finish signal).
If there is a designation of No. of times, the above control will be executed only for the first drilling.

(6) If another control axis (ex. rotary axis, additional axis) is commanded in the same block as the fixed cycle control axis, the fixed cycle will be executed after the other control axes start to move.

(7) If the No. of repetitions L is not designated, L1 will be set. If L0 is designated in the same block as the fixed cycle G code command, the hole machining data will be memorized, but the hole machining will not be executed.

(Example) G83.1 X_ Y_ Z_ R_ Q_ P_ F_ L0_ ;
Memorize only the codes with an address

(8) When the fixed cycle is executed, only the modal command issued in the fixed cycle program will be valid in the fixed cycle subprogram. The modal of the program which called the fixed cycle will not be affected.

(9) Other subprograms cannot be called from the fixed cycle subprogram.

(10) Decimal points in the movement command of the fixed cycle subprogram will be ignored.

(11) If the No. of repetitions L is 2 or more during the incremental mode, the positioning will also be incremented each time.

(Example) G81 U-10. Z-50. R-20. F100. L3 ;

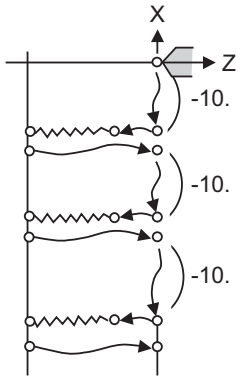


(12) If the spindle rotation speed value during return is smaller than the spindle speed value, the spindle rotation speed value is valid even during return.

(13) If gradients of the 2nd and 3rd acceleration/deceleration stages according to the spindle rotation speed and time constants set in the parameters are each steeper than the previous stage's gradients, the previous stage's gradient will be valid.

(14) If the values set in the spindle base specification parameter "tap rotation speed" and "the synchronous tap changeover spindle rotation speed 2" exceed the maximum rotation speed, the spindle rotation speed will be clamped at the maximum rotation speed.

(15) If the spindle rotation speed is not 0 during return, the taping retract override value will be invalid.

(16) As shown below, in a block where the movement direction of either axis reverses, the servo system load will greatly increase, so do not command the in-position width in the machining program.

(Example) G0 X100. ,I10.0;
X-200. ;

(17) If the in-position width commanded by the programmable in-position width command is increased, the positioning time and linear interpolation time can be reduced. However, the position error amount of the previous block will also increase before the next block starts, and the actual machining could be obstructed.

(18) The in-position width and the position error amount are constantly compared, so the position error amount at the point to be judged as in-position will be smaller than the commanded in-position width.

(19) If the in-position width commanded with the programmable in-position command is small, the commanded deceleration check or in-position check by the parameters may be carried out first.

(20) Synchronous/asynchronous tap depends on parameter settings.

Base specification parameters

| # | Item | Details | Setting range |
|---|---|---|---|
| 1513 | stapM | M code for synchronous tapping selection | 0 to 99999999 |

The synchronous tapping mode is selected with the miscellaneous function code set with this parameter.

The M function can be commanded just before or in the same block as the tapping command.

To use this parameter, validate "#1272 ext08/bit1" (M function synchronous tapping cycle).

The selection of synchronous or asynchronous tappinf will follow the combination shown below.

| | Combination | | | | | | | | | | | |
|---|---|---|---|---|---|---|---|---|---|---|---|---|
| Program command (G84/G84.2) | 0 | 0 | 0 | 0 | 1 | 1 | 1 | 1 | No command | | | |
| #8159 Synchronous tap | 0 | 0 | 1 | 1 | 0 | 0 | 1 | 1 | 0 | 0 | 1 | 1 |
| M function code (M**) | × | ○ | × | ○ | × | ○ | × | ○ | × | ○ | × | ○ |
| Synchronous/asynchronous selection | A | A | A | A | B | B | B | B | A | B | B | B |

0: G84 (Tapping cycle)

1: G84.2 (Synchronous tapping cycle)

× Does not command

○ Commands

A Asynchronous tap

B Synchronous tap

## Note

- Do not use M00, 01, 02, 30, 98 and 99.
- Depending on the model, selection by the M function may not be available.
- These parameters depend on the MTB specifications.

# 14

# Macro Functions

# 14.1 Subprogram Control; M98, M99, M198

## 14.1.1 Subprogram Call; M98, M99

### Function and purpose

Fixed sequences or repeatedly used parameters can be stored in the memory as subprograms that can then be called from the main program when required. M98 serves to call subprograms and M99 serves to return operation from the subprogram to the main program. Furthermore, it is possible to call other subprograms from particular subprograms.
The nesting depth depends on the model. (10 levels for M800/M80/E80, 8 levels for C80)

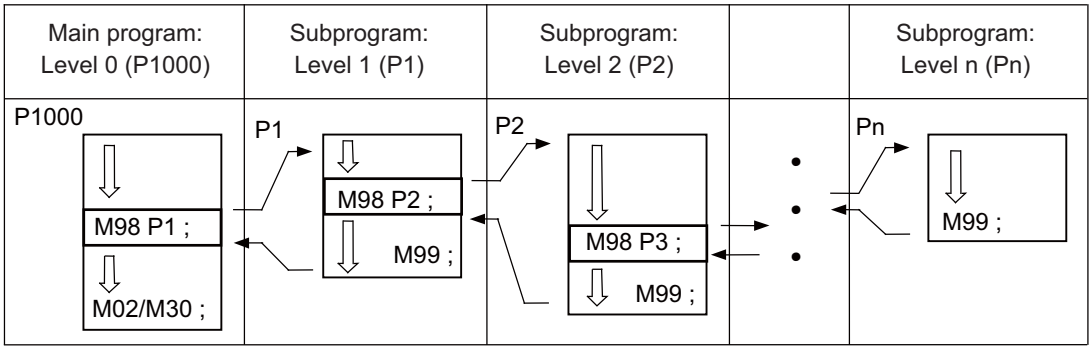


The table below shows the functions that can be executed by adding and combining the tape memory/editing functions, subprogram control functions and fixed cycle functions.

| | Case 1 | Case 2 | Case 3 | Case 4 |
|---|---|---|---|---|
| 1. Tape memory and editing | Yes | Yes | Yes | Yes |
| 2. Subprogram control | No | Yes | Yes | No |
| 3. Fixed cycles | No | No | Yes | Yes |
| **Function** | | | | |
| 1. Memory mode | ○ | ○ | ○ | ○ |
| 2. Tape editing (main memory) | ○ | ○ | ○ | ○ |
| 3. Subprogram call | × | ○ | ○ | × |
| 4. Subprogram variable designation (*2) | × | ○ | ○ | × |
| 5. Subprogram nesting call (*3) | × | ○ | ○ | × |
| 6. Fixed cycles | × | × | ○ | ○ |
| 7. Editing subprogram for fixed cycle | × | × | ○ | ○ |

(*1) Symbol "○" denotes available functions and symbol "×" denotes unavailable functions.

(*2) Variables cannot be transferred with the M98 command, but variable commands in subprograms are available if the variable command specifications are provided.

(*3) The depth of nesting call depends on the model.

## Command format

### Subprogram call

```
M98 P__ H__ L__ ,D__ ;
```

```
M98 <file name> H__ L__ ,D__ ;
```

| | |
|---|---|
| P | Program number in subprogram to be called (own program if omitted)<br>Note that P can be omitted only for memory mode, MDI operation, high-speed program server operation, SD card operation, hard disk operation, or USB operation.<br>(Numeric value of up to 8 digits)<br>Use a parameter to specify a 4- or 8-digit subprogram No. starting with O.<br>However, if the commanded value is bigger than the digit number set with parameter, a subprogram call is carried out as commanded. |
| <File name> | File name<br>A file name can be specified instead of a program No.<br>In this case, enclose the file name inside brackets < >.<br>(The file name can have up to 32 characters including the extension.)<br>(Example) M98 <BUHIN-12. RAF> ; |
| H | Program sequence number in subprogram to be called (head block if omitted) |
| L | Number of subprogram repetitions<br>(If omitted, it is assumed to be "L1", and processing is not carried out when "L0" is set.)<br>(1 to 9999 times depending on the 4-digit value)<br>For instance, “M98 P1 L3;” is equivalent to the following:<br>M98 P1 ;<br>M98 P1 ;<br>M98 P1 ; |
| ,D<br>[M8] | Subprogram device No. (0 to 4)<br>The subprogram is searched according to the setting of parameter "#8890 Subpro srch odr D0" to "#8894 Subpro srch odr D4" when ",D" is omitted.<br>The device No. is set to the parameter, such as "#8880 Subpro stor D0: dev". |
| ,D<br>[C80] | Subprogram device No. (0 to 1)<br>When ",D" command is omitted, the subprogram is searched in the area where main program is being executed.<br>,D0: Basic area (memory)<br>,D1: Extended area (memory2) (*1)(*2) |

(*1) To use memory2 (extended area), additional specification of part program storage capacity of 2560 [m] or 5120 [m] is required. If the specification is invalid, program error occurs when ",D1" is designated.

(*2) Program in extended area can be called as a subprogram from the program in basic area and program within the other extended area. Note that program in extended area can call a program in basic area as well.

### Return to main program from subprogram

```
M99 P__ ;
```

| | |
|---|---|
| P | Sequence No. of return destination (returned to block that follows the calling block) |

## Detailed description

### Creating and registering subprograms

Subprograms have the same format as machining programs for normal memory mode, except that the subprogram completion instruction "M99 (P_);" must be commanded alone in the last block.

| | |
|---|---|
| O******** ; | Program No. as subprogram No. |
| ..... ;<br>:<br>..... ; | Main body of subprogram |
| M99 ; | Subprogram return command |
| %(EOR) | Registration completion code |

(1) The above program is registered by editing operations at the setting and display unit. For further details, refer to the section on "program editing" in the Instruction Manual.

(2) Only those subprogram Nos. ranging from 1 to 99999999 designated by the optional specifications can be used. When there are no program Nos. on the tape, they are registered as the setting No. for "program input."

(3) If a program is called from a subprogram over the nesting depth determined in the specifications, the program error (P230) will occur.

(4) Main programs and subprograms are registered in the order they were read without distinction. Therefore, main programs and subprograms should not be given the same Nos. (If they are, error "E11" will be displayed at registration.)

(5) Main programs can be executed during memory, tape, MDI, or BTR mode, but subprograms must be in the memory mode.

(6) Besides the M98 command, subprogram nesting is subject to the following commands:
- G65: Macro call
- G66: Modal call
- G66.1: Modal call
- G Code call
- Miscellaneous function call
- MDI interruption
- Automatic tool length measurement
- Macro interruption
- Multiple-step skip function

(7) The following commands can be called even if the nesting depth exceeds the determined depth in the specifications because they are not subject to subprogram nesting.
- Fixed cycles
- Pattern cycles

(8) To repeatedly use the subprogram, it can be repeated I1 times by programming M98 Pp1 LI1;.

(9) When using the multi-part system, if the subprogram attributed to the part system with the call command is empty, the subprogram call operation will change according to the parameters. (These parameters depend on the MTB specifications.)

| #1285 ext21/ bit1 | Description |
|---|---|
| OFF | The subprogram registered in the memory for the selected part system is called out. |
| ON | The subprogram registered in the memory for the selected part system is called out. If the subprogram in the selected part system is empty, the subprogram with the same No. in the 1st part system is called out. |

## Program example

### Program example 1

When there are 3 subprogram calls (known as 3 nesting levels)

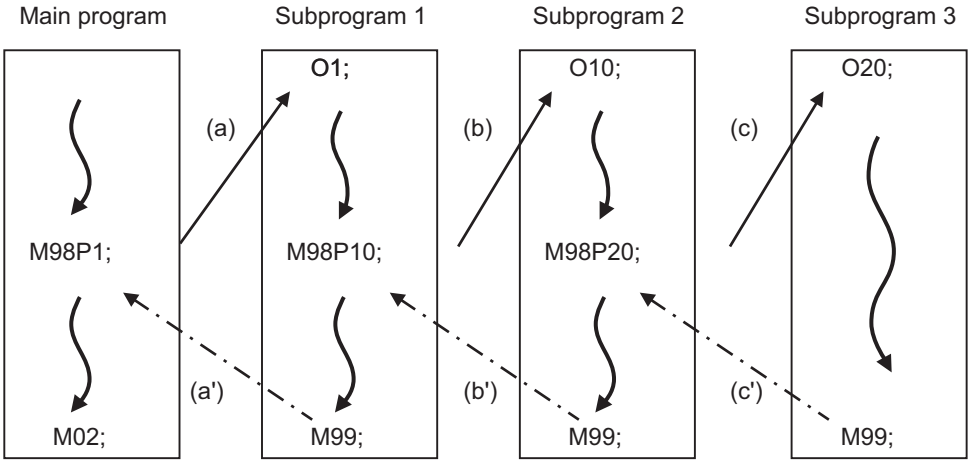


Sequence of execution: (a)-(b)-(c)-(c')-(b')-(a')

(1) For nesting, the M98 and M99 commands should always be paired off on a 1:1 basis; (a)' for (a), (b)' for (b), etc.

(2) Modal information is rewritten in the order of execution sequence without distinction between main programs and subprograms. Therefore, after calling a subprogram, attention must be paid to the modal data status when programming.

### Program example 2

The M98 H_ ; M99 P_ ; commands designate the sequence Nos. in a program with a call instruction.

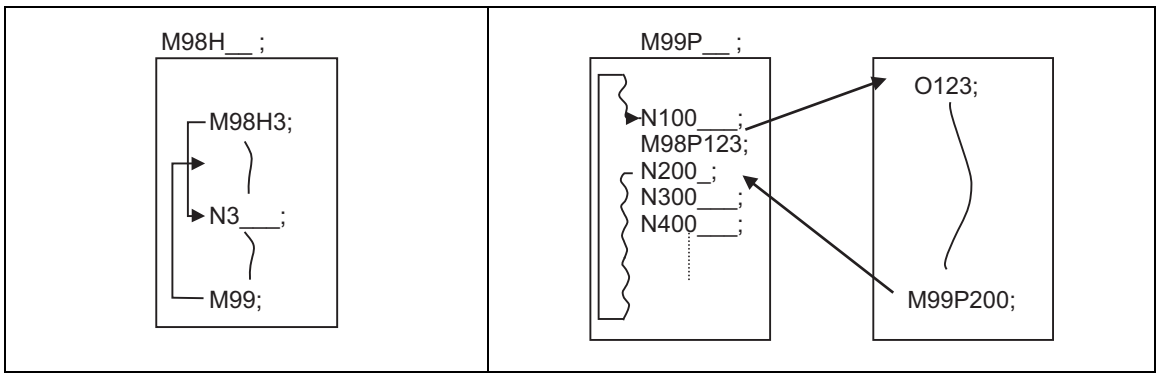

## Precautions

(1) The program error (P232) will occur when the designated P (program No.) cannot be found.

(2) The M98 P_ ; M99 ; block does not perform a single block stop. If any address except O, N, P, L or H is used, single block stop can be executed. (With "X100. M98 P100 ;", the operation branches to O100 after X100. is executed.)

(3) When M99 is commanded by the main program, operation returns to the head. (This is the same as for MDI.)

(4) Branching from tape and BTR mode to the subprogram with M98 P_; is possible, but the return destination sequence No. cannot be designated with M99 P_ ; . (P_ is ignored.)

(5) Note that it takes time to search when the sequence No. is designated by M99 P_ ;.

(6) When using a file name for the subprogram, specify the file name with 32 characters or less, including the extension. If a file name exceeding 32 characters is specified, a program error (P232) will occur.

(7) All the programs are registered as files. For example, when calling a file "0100" as a subprogram, "0100" cannot be searched with M98P100 or M98P0100. When numerical values are specified after P, 0 is ignored. In this case, it is regarded that the program No. (file) "100" is specified. To call a program like "0100" , specify the file name using the M98<0100> format.

(8) A subprogram added O No. is searched with the parameter setting (#8129="1" or "2") which calls a subprogram with O No. as priority.
If a subprogram with O No. is not found, a subprogram with a name specified with the P command is searched.

<Note>

- To prevent any unintended program call, avoid using program names that may be confused. (For example, 123, O0123 and O00000123 can be considered identical.)

Refer to the next page for operation examples of subprogram search with the setting which calls subprograms with O No. as priority.

(a) With designation of device No.

Only the designated devices are subject to search. (The following is an example of M8 series.)

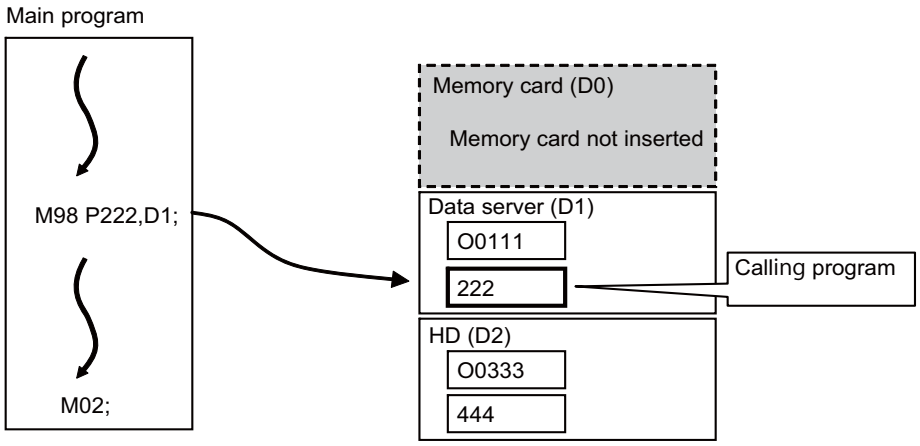


[Parameter setting]

#8129 Subpro No. select = 1 (Four-digit program No. beginning with O No.)
#8880 Subpro stor D0 dev = R (Memory card)
#8882 Subpro stor D1 dev = D (Data server)
#8884 Subpro stor D2 dev = G (Hard disk)

(b) Without designation of device No.

[M8]

A subprogram with O No. is searched according to the settings of #8890 (D0 in order of subprogram search) to #8894 (D4 in order of subprogram search). (Refer to the solid line arrows "a" and "b" in the figure.)

If a subprogram with O No. is not found, subprograms with a name designated with the P command are searched in order of the parameter setting. (Refer to the broken lines "c" and "d" in the figure.)

If none of the designated subprogram storage locations are subject to search, memories are searched.

**Note**

- If any device or directory designated as the subprogram storage location is not found due to a reason such as absence, poor contact and contact failure of a memory card, the said device or directory will be excluded from the search target.

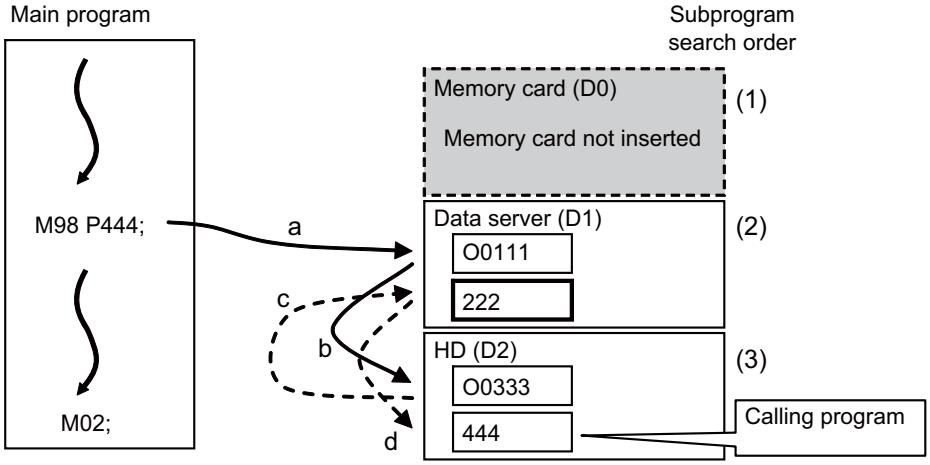


[Parameter setting]

#8129 Subpro No. select = 1 (Four-digit program No. beginning with O No.)
#8880 Subpro stor D0 dev = R (Memory card)
#8882 Subpro stor D1 dev = D (Data server)
#8884 Subpro stor D2 dev = G (Hard disk)
#8890 Subpro srch odr D0 = 1
#8891 Subpro srch odr D1 = 2
#8892 Subpro srch odr D2 = 3

[C80]

Subprogram is searched inside of the currently selected device.

(9) When a program in an external device such as a USB memory device is executed, a period of processing time is required in the subprogram call or in the instruction to change the flow of the program such as GOTO or DO-END; therefore, interpolation may be decelerated or stopped.

## 14.1.2 Subprogram Call; M198

### Function and purpose

Programs registered in the SD card can be called as a subprograms. To call a program in the SD card as a subprogram, command the following with the main program.

### Command format

**Subprogram call**

```
M198 P__ L__ ;
```

```
M198 <File name> L__ ;
```

| | |
|---|---|
| P | Program No. in SD card to be called as a subprogram. (Max. 8 digits)<br>Use a parameter to specify a 4- or 8-digit subprogram No. starting with O. However, if the commanded value is bigger than the digit number set with parameter, a subprogram call is carried out as commanded. |
| <File name> | File name<br>A file name can be specified instead of a program No.<br>In this case, enclose the file name inside brackets < >.<br>(The file name can have up to 32 characters including the extension.) |
| L | Number of subprogram repetitions. (Max. 4 digits)<br>This can be omitted. (In this case, the subprogram will be called once.)<br>When "L0" is designated, the subprogram call will not be executed. |

**Note**

(1) Sequence No. call (M198 H***) cannot be commanded.

**Return to main program from subprogram**

```
M99 ;
```

### Detailed description

(1) The device that can be used for M198 subprogram call differs depending on the NC models.
The SD card in the front side is available for M800S/M80, and the SD card in the control unit is available for M800W. (The M198 command is not available for the C80 series.)

(2) The subprogram can be called with the M198 command once in the subprogram nest. The subprogram can be called only from the memory or MDI program.

(3) The section from the head of the program to the first LF (line feed code, 0x0A hexadecimal) is invalid, and is not run or displayed. Note that if the head starts with a O No., the program will be valid from the head.

(4) A program registered in an SD card can be executed from only one part system. A program error will occur if an attempt is made to execute the programs in the SD card simultaneously by two or more part systems. If all the part system is reset when the error occurred, programs will be displayed as only "%" except for the first part system.

(5) Refer to "14.1.1 Subprogram Call; M98, M99" for <File name> and calling the subprogram with O No.

# 14.2 Variable Commands

## Function and purpose

Programming can be endowed with flexibility and general-purpose capabilities by designating variables, instead of giving direct numerical values to particular addresses in a program, and by assigning the variable values depending on the conditions that exist when executing the program.
All common variables are retained even when the power is turned OFF.
When the power is turned OFF or reset, the common variables can be set to <null> by setting the parameter ("#1128 RstVCl", "#1129 PwrVCl").

## Command format

```
#ΔΔΔ=○○○○○○○○ ;
```

```
#*** = [formula] ;
```

## Detailed description

### Variable expressions

| | | Example |
|---|---|---|
| #m | m = value consisting of 0 to 9 | #100 |
| # [f] | f = one of the followings in the formula | #[-#120] |
| | Numerical value m | 123 |
| | Variable | #543 |
| | Formula Operator Formula | #110+#119 |
| | - (minus) formula | -#120 |
| | [Formula] | [#119] |
| | Function [formula] | SIN[#110] |

**Note**

(1) The 4 standard operators are +, -, * and /.
(2) Functions cannot be used unless the user macro specifications are available.
(3) Error (P241) will occur when a variable No. is negative.
(4) Examples of incorrect variable expressions are given below.

| Incorrect | Correct |
|---|---|
| #6/2 | # [6/2] (#6/2 is regarded as [#6] /2.) |
| #--5 | #[-[-5]] |
| #-[#1] | #[-#1] |

## Types of Variables

The following table gives the types of variables.

The common variables are divided into the following two types.

Common variables 1: Used in common through all part systems
Common variables 2: Used in common in the programs of the part system

| Type | | | No. | | Function |
|---|---|---|---|---|---|
| Common variable | | | Common variables 1 | Common variables 2 | ♦Can be used in common throughout main, sub and macro programs.<br>♦When using common variables in the multi-part system, the number of common variables shared between the part systems can be specified depending on the MTB specifications (parameter "#1052 MemVal"). (*2)<br>♦(Only for C80 series) Can be read from/written to each common variable by using ZR80000 or later.<br>Refer to "PLC Interface Manual" for the correspondence between the ZR device No. and the common variable No. |
| | 1 part system | 200 sets | 500 - 599 | 100 - 199 | |
| | | 600 sets | 500 - 999<br>100100 - 800199 (*4) | 100 - 199 | |
| | | 700 sets | 400 - 999 (*1)<br>100100 - 800199 (*4) | 100 - 199 | |
| | | 8000 sets | 400 - 999 (*1)<br>100100 - 800199 (*4)<br>900000 - 907399 (*3) | 100 - 199 | |
| | Multi-part systems (n = number of part systems) | 600 + 100 * n sets | 400 - 999 (*1)<br>100100 - 800199 (*4) | 100 - 199 *n | |
| | | 7900 + 100 * n sets | 400 - 999 (*1)<br>100100 - 800199 (*4)<br>900000 - 907399 (*3) | 100 - 199 *n | |
| Local variables | | | 1 - 33 | | Can be used as local variables in macro programs. |
| ZR device access variables (only for C80 series) | | | 50000 - 50749<br>51000 - 51749<br>52000 - 52749 | | Can be read and written by the PLC or GOT. |
| System variable | | | 1000 - | | Application is fixed by system. |
| Fixed cycle variables | | | 1 - 32 | | Local variables in fixed cycle programs. |

(*1) Common variable address #400s can only be used when there are 700 or more sets of common variables and the MTB specifications are valid (parameter "#1336 #400_Valtyp").
When common variable address #400s can be used, these can be displayed and set on the common variable screen.
It also becomes possible to input/output data of common variable address #400s.

(*2) When the parameter "#1052 MemVal" is set to "1" in multi-part system (MTB specifications), some or all of common variables "#100 to #199" and "#500 to #999" can be shared and used between part systems. The number of variables sharable in part systems depends on the MTB specifications (parameters "#1303 V1comN" and "#1304 V0comN").

(Example) When "#1304 V0comN" is set to "5":
#500 to #504: Common for the part systems
#505 to #999: Each part system

Depending on the MTB specifications, the common variables #100 to #199 are used for each part system, and variables #500 to #999 are common for the part systems (parameter "#1052 MemVal"). Address #400s, that can be used as common variable with 700 or more sets of variable, is common for the part systems regardless of the setting of parameter "#1052 MemVal".

(*3) When "#1052 MemVal" is set to "1", #900000 to #907399 available for 8,000 sets of variable are not available.

(*4) When the parameter "#1316 CrossCom" is set to "1", the common variables #100100 to #800199 can be shared between the part systems. (This depends on the MTB specifications.) The part system common variable which can be used is shown in the table below.

| Variable sets | | Common variables 1 (When "#1316 CrossCom" = "1") |
|---|---|---|
| Variable sets specification | 600 sets (500 + 100 sets) | #100100 to #100199 (Equivalent to # 100 to #199 in 1st part system)<br>#200100 to #200199 (Equivalent to # 100 to #199 in 2nd part system)<br>#300100 to #300199 (Equivalent to # 100 to #199 in 3rd part system)<br>#400100 to #400199 (Equivalent to # 100 to #199 in 4th part system)<br>#500100 to #500199 (Equivalent to # 100 to #199 in 5th part system)<br>#600100 to #600199 (Equivalent to # 100 to #199 in 6th part system)<br>#700100 to #700199 (Equivalent to # 100 to #199 in 7th part system)<br>#800100 to #800199 (Equivalent to # 100 to #199 in 8th part system) |
| | 700 sets (600 + 100 sets) | |
| | 8000 sets (7900 + 100 sets) | |

(Example)

<1-part system>

| | |
|---|---|
| #100100=200 ; | Equivalent to #100 = 200 ; |
| #200105=#100 ; | "200" is set to #200105. |
| #300110=#100100 ; | "200" is set to #300110. |
| #800199=#500120 ; | The variable value of "#500120" is set to #800199. |

<Multi-part system>

Common variables for each part system #100 to #199" in other part system can be used.

$1

| | |
|---|---|
| #200100=-100 ; | "-100" is set to #100 of 2nd part system. |
| #101=#200102 ; | "#101" is set to #102 of 2nd part system. |
| #300105=#200103 ; | "#103" of 2nd part system is set to #105 of 3rd part system. |
| #110=#500107 ; | The variable value of "#500107" is set to #110. |

- The PLC data reading function cannot be used, which uses system variables #100100 to #100110, and variables #100100 to #100110 are used as common variables.
- The setting of number of common variables shared between the part systems (The parameter #1052 MemVal" is set to "1") becomes invalid, thus the movement is the same as "0" is set.
- When the parameters "#1128 RstVCl", "#1129 PwrVCl" are set to "1", the operation is as follows.
  "#1128 RstVCl"
  The common variables shared between the part systems equivalent to #100 to #199 of the reset part system are cleared.
  (Example) If the 1st part system is reset, #100100 to #100199 are cleared.
  If the 2nd part system is reset, #200100 to #200199 are cleared.
  "#1129 PwrVCl"
  The common variables shared between the part systems equivalent to #100 to #199 in the valid part system are cleared.
  (Example) In 1st part system, #100100 to #100199 are cleared.
  In 2nd part system, #100100 to #100199 and #200100 to #200199 are cleared.
- Common variables shared between the part systems #100100 to #800199 can be displayed and set on the common variable screen.
- If common variables #100100 to #800199 are used when the number of sets of common variables is less than 600 sets or the parameter "#1316 CrossCom" is "0", a program error (P241) will occur.

### Note

(1) When inputting the common variable data, if the following illegal variable No. data exist in the input file, the illegal variable No. data is ignored and only the correct common variable data will be input.
- Variable data that is not common variables such as local variables (#1 to #33) or system variables (#1000 and after)
- Variable data of which the number of common variable sets does not match the pre-specified value

(Example)

If variables of # numbers undefined in the specifications exist in the input file when there are 700 sets of common variables (#100 to #199, #500 to #999, and #100100 to #800199), they are ignored, and only the variables defined in the specifications are input.

## Variable quotations

Variables can be used for all addresses except O, N and / (slash).

(1) When the variable value is used directly:

X#1 Value of #1 is used as the X value.

(2) When the complement of the variable value is used:

X-#2 Value with the #2 sign changed is used as the X value.

(3) When defining variables:

#3 = #5 Variable #3 uses the equivalent value of variable #5.

#1 = 1000 Variable #1 uses the equivalent value 1000. ("1000" is assumed to be "1000.".)

(4) When defining the variable arithmetic formula:

#1 = #3 + #2 - 100 Value of the operation result of "#3 + #2 - 100." is used as the #1 value.

X[#1 + #3 + 1000] Value of the operation result of "#1 + #3 + 1000" is used as the X value.

### Note

(1) A variable cannot be defined in the same block as an address. It must be defined in a separate block.

| Incorrect | | Correct |
|---|---|---|
| X#1 = #3 + 100 ; | → | #1 = #3 + 100 ;<br>X#1 ; |

(2) Up to five sets of square parentheses [ ] may be used.

#543 = -[[[[[#120]/2+15.]*3-#100]/#520+#125+#128]*#130+#132]

(3) There are no restrictions on the number of characters and number of variables for variable definition.

(4) The variable values should be within the range of 0 to ±99999999.
If this range is exceeded, the arithmetic operations may not be conducted properly.

(5) The variable definitions become valid when definitions are made.

#1 = 100 ; ..... #1 = 100

#1 = 200 #2 = #1 + 200 ; ..... #1 = 200, #2 = 400

#3 = #1 + 300 ; ..... #3 = 500

(6) Variable quotations are always regarded as having a decimal point at the end.
When #100 is set to “10”
“X#100;” is set to “X10.”.

(7) The significant digits of the variable are up to 15 decimal digits. Note that the calculation may cause an error. For example, in the following formula, correct judgment cannot be made due to the error.

IF [#10 EQ #20]

Calculate with attention to the error when comparing variables. If the difference between the variables to be compared falls within the specified error range as in the following formula, consider them as equal. If the error is less than 0.01, describe the formula as follows.

IF [ABS [#10 - #20] LT 0.01]

### Protection of common variable

(1) If the common variable protection function is valid, the common variables in the range specified in the parameters (#12111 to #12114) cannot be changed from machining program or screen operation, or user operation such as file input. This function depends on the MTB specifications (parameter "#1391 User level protect").

(2) If an attempt is made to change the value or name of the protected variable on the machining program, the program error (P243) will occur, causing the operation to be stop. Such a variable value or name can be changed using the machine tool builder macro program, but cannot be done by the user.
Multiple variable names can be changed in one block with the SETVNn command. However, if at least one of them is protected, the program error (P243) will occur.

(3) If "#1128 RstVCl" is set to "1", the variables (#100 to #199) are cleared after reset even if common variables (#100 to #199) are protected.

(4) If "#1129 PwrVCl" is set to "1", the variables (#100 to #199) are cleared at the power-ON even if common variables (#100 to #199) are protected.

(5) For common variables used common to the part systems, the variable values and variable names can be changed by the displayed part system.

# 14.3 User Macro

## Function and purpose

A group of control and arithmetic instructions can be registered and used as a macro program to make it one integrated function.
Macro programs use variables, control and arithmetic instructions to create subprograms which function to provide special-purpose controls.
By combining the user macros with variable commands, it is possible to use the macro program call, arithmetic operations, data input/output with PLC, control, decision, branch and many other instructions for measurement and other such applications.

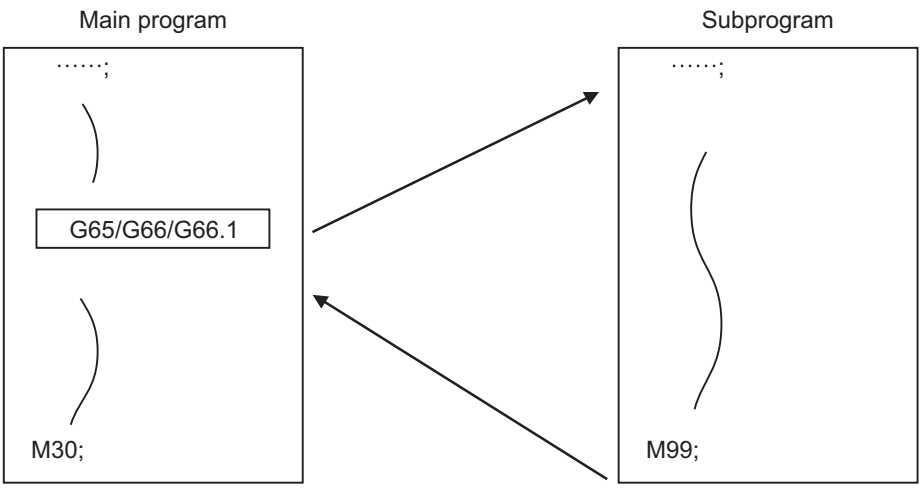


These special-purpose control functions (macro programs) are called by the macro call instructions from the main program when needed.

| G code | Function |
|---|---|
| G65 | User macro Simple call |
| G66 | User macro Modal call A (Movement command call) |
| G66.1 | User macro Modal call B (Per-block call) |
| G67 | User macro Modal call (G66, G66.1) cancel |

## Detailed description

(1) When the G66 or G66.1 command is entered, the specified user macro program will be called every time a block is executed or after a movement command in blocks with a movement command is executed, until the G67 (cancel) command is entered.

(2) The G66 (G66.1) and G67 commands must be paired in a same program.

# 14.4 Macro Call Instructions

### Function and purpose

Macro call commands include the simple calls which call only the instructed block and the modal calls (types A and B) which call a block in the call modal.

When the macro argument L/P valid function is enabled, the addresses L (number of subprogram repetitions) and P (calling program No.) used as commands in user macro can be used as arguments.

The validity of this parameter depends on the MTB specifications (Parameter "#1241 set13"/bit5 (Macro argument L/P valid)). For C80, the macro argument L/P function is unavailable.
When a program in an external device such as a USB memory device is executed, a machining program stored in USB memory cannot be called with a macro call such as G65, G66, or G66.1. Using such a macro calls a macro program in memory.

## 14.4.1 Simple Macro Calls; G65

### Function and purpose

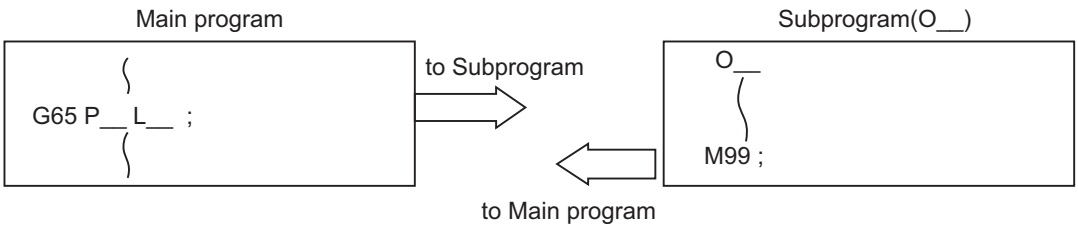


M99 is used to terminate the user macro subprogram.

### Command format

**Simple macro calls**

```
G65 P__ L__ argument ;
```

**Simple macro calls**

```
G65 <File name> L__ argument ;
```

| | |
|---|---|
| P | Program No. (*1)<br>Use a parameter to specify a 4- or 8-digit subprogram No. starting with O. |
| <File name> | File name<br>A file name can be specified instead of a program No.<br>In this case, enclose the file name inside brackets < >.<br>(The file name can have up to 32 characters including the extension.) |
| L | Number of repetitions (*1)<br>If omitted, this value is set to "1". (0 to 9999) |
| Argument | Specify variable data |

(*1) Can also be used as an argument at the same time as the macro argument L/P valid function is enabled. (M8 Series)

## Detailed description

(1) When the argument must be transferred as a local variable to a user macro subprogram, the actual value should be designated after the address.
In this case, regardless of the address, a sign and decimal point can be used in the argument. There are 2 ways in which arguments are designated.

### Argument designation I

Format : A_ B_ C_ .....X_ Y_ Z_

(a) Arguments can be designated using any address except G, L, N, O and P.

(b) I, J and K must be designated in alphabetical order.

I_ J_ K_...Correct
J_ I_ K_...Incorrect

(c) Except for I, J and K, there is no need for designation in alphabetical order.

(d) Addresses which do not need to be designated can be omitted.

(e) The following table shows the correspondence between the addresses which can be designated by argument designation I and the variable numbers in the user macro main body.

| Address and variable No. correspondence | | Addresses available for call instructions | |
|---|---|---|---|
| Argument designation I address | Variable in macro | G65, G66 | G66.1 |
| A | #1 | ○ | ○ |
| B | #2 | ○ | ○ |
| C | #3 | ○ | ○ |
| D | #7 | ○ | ○ |
| E | #8 | ○ | ○ |
| F | #9 | ○ | ○ |
| G | #10 | × | × (*1) |
| H | #11 | ○ | ○ |
| I | #4 | ○ | ○ |
| J | #5 | ○ | ○ |
| K | #6 | ○ | ○ |
| L | #12 | × | × (*1)(*2) |
| M | #13 | ○ | ○ |
| N | #14 | × | × (*1) |
| O | #15 | × | × |
| P | #16 | × | × (*1)(*2) |
| Q | #17 | ○ | ○ |
| R | #18 | ○ | ○ |
| S | #19 | ○ | ○ |
| T | #20 | ○ | ○ |
| U | #21 | ○ | ○ |
| V | #22 | ○ | ○ |
| W | #23 | ○ | ○ |
| X | #24 | ○ | ○ |
| Y | #25 | ○ | ○ |
| Z | #26 | ○ | ○ |

○: Available
×: Unavailable

(*1) Can be used while G66.1 command is modal

(*2) Can be used while the macro argument L/P valid function is enabled.

### Argument designation II

Format: A__B__C__I__J__K__I__J__K__...

(a) In addition to address A, B and C, up to 10 groups of arguments with I, J, K serving as 1 group can be designated.

(b) When the same address is duplicated, designate the addresses in the specified order.

(c) Addresses which do not need to be designated can be omitted.

(d) The following table shows the correspondence between the addresses which can be designated by argument designation II and the variable numbers in the user macro main body.

| Argument designation II address | Variable in macro | Argument designation II address | Variable in macro |
|---|---|---|---|
| A | #1 | J5 | #17 |
| B | #2 | K5 | #18 |
| C | #3 | I6 | #19 |
| I1 | #4 | J6 | #20 |
| J1 | #5 | K6 | #21 |
| K1 | #6 | I7 | #22 |
| I2 | #7 | J7 | #23 |
| J2 | #8 | K7 | #24 |
| K2 | #9 | I8 | #25 |
| I3 | #10 | J8 | #26 |
| J3 | #11 | K8 | #27 |
| K3 | #12 | I9 | #28 |
| I4 | #13 | J9 | #29 |
| J4 | #14 | K9 | #30 |
| K4 | #15 | I10 | #31 |
| I5 | #16 | J10 | #32 |
| | | K10 | #33 |

**Note**

(1) The numbers 1 to 10 accompanying I, J and K indicate the sequence of the commanded sets, and are not required in the actual command.

### Using arguments designations I and II together

(1) If addresses corresponding to the same variable are commanded when both types I and II are used to designate arguments, the latter address will become valid.

(Example 1)

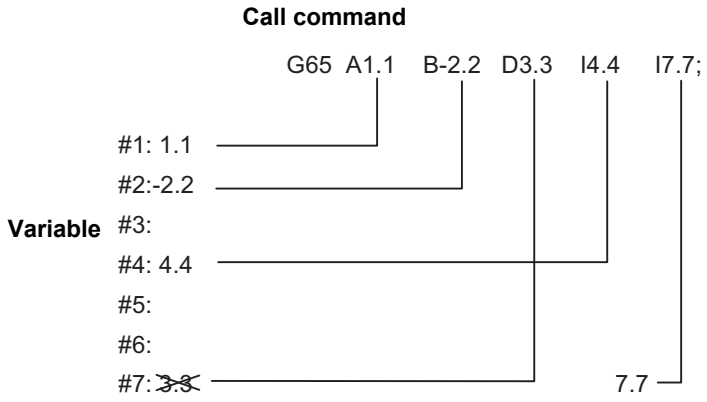


In the above example, I7.7 argument is valid when both arguments D3.3 and I7.7 are commanded for the #7 variable.

(2) If calling a subprogram numbered with O is enabled, a sub program number starting with O and specified by P command value is called with a priority.
However, when P command value is less than the digit number set with parameter "#8129 Subpro No. select", increase the digit number of command value by adding leading zeros.
(Example) When parameter "#8129 Subpro No. select"="1", call the subprogram "O0012" with "G65 P12" command.

(3) In the following cases, a subprogram of P command value without O No. is called even with a setting to call a subprogram with O No.

- The digit number of P command value is over the digit number of the program number set with parameter "#8129 Subpro No. select".
- A subprogram starting with commanded O No. does not exist.

## 14.4.2 Modal Call A (Movement Command Call) ; G66

### Function and purpose

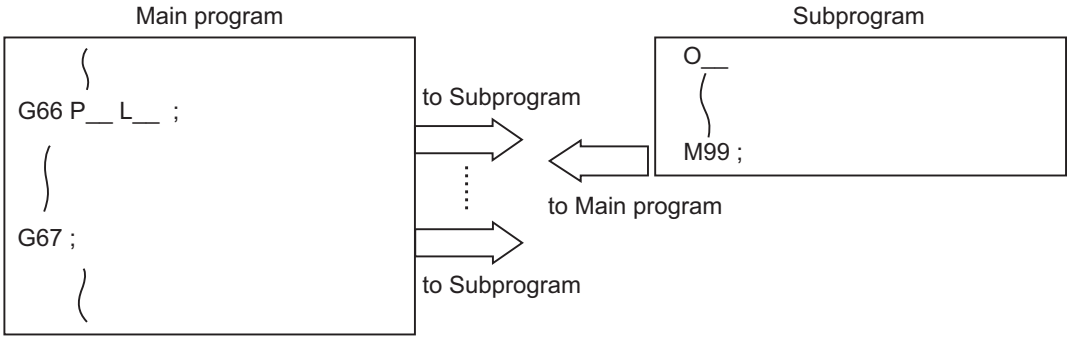


When the block with a movement command is commanded between G66 and G67, the movement command is first executed and then the designated user macro subprogram is executed. A number of user macro subprograms are designated with "L".
The argument is the same as for a simple call.

### Command format

**Modal call A**

```
G66  P__  L__  argument ;
```

```
G66  <File name>  L__  argument ;
```

| | |
|---|---|
| P | Program No. (*1)<br>Use a parameter to specify a 4- or 8-digit subprogram No. starting with O. |
| <File name> | File name<br>A file name can be specified instead of a program No.<br>In this case, enclose the file name with brackets < >.<br>(The file name can have up to 32 characters including the extension.) |
| L | Number of repetitions (*1) |
| Argument | Specify variable data |

(*1) Can also be used as an argument at the same time as the macro argument L/P valid function is enabled. (M8 Series)

**Modal call end**

```
G67;
```

### Detailed description

(1) When the G66 command is entered, the specified user macro program will be called after the movement command in a block with the movement commands has been executed, until the G67 (cancel) command is entered.

(2) The G66 and G67 commands must be paired in a same program.
A program error will occur when G67 is issued without G66.

(3) If calling a subprogram numbered with O is enabled, a sub program number starting with O and specified by P command value is called with a priority.
However, when P command value is less than the digit number set with parameter "#8129 Subpro No. select", increase the digit number of command value by adding leading zeros.

(Example)

When parameter "#8129 Subpro No. select"="1", call the subprogram "O0012" with "G66 P12" command.

(4) In the following cases, a subprogram of P command value without O No. is called even with a setting to call a subprogram with O No.

- The digit number of P command value is over the digit number of the program number set with parameter "#8129 Subpro No. select".
- A subprogram starting with commanded O No. does not exist.

## 14.4.3 Modal Call B (for Each Block); G66.1

### Function and purpose

The specified user macro subprogram is called unconditionally for each command block that is assigned between G66.1 and G67 and the subprogram will be repeated for the number of times specified in .
The argument is the same as for a simple call.

### Command format

**Modal call B**

```
G66.1 P__ L__ argument ;
```

```
G66.1 <File name> L__ argument ;
```

| | |
|---|---|
| P | Program No. (*1)<br>Use a parameter to specify a 4- or 8-digit subprogram No. starting with O. |
| <File name> | File name<br>A file name can be specified instead of a program No.<br>In this case, enclose the file name inside brackets < >.<br>(The file name can have up to 32 characters including the extension.) |
| L | Number of repetitions (*1) |
| Argument | Specify variable data |

(*1) Can also be used as an argument at the same time as the macro argument L/P valid function is enabled. (M8 Series)

**Modal call end**

```
G67;
```

## Detailed description

(1) In the G66.1 mode, everything except the O, N and G codes in the various command blocks which are read are handled as the argument without being executed. Any G code designated last or any N code commanded after anything except O and N will function as the argument.

(2) All significant blocks in the G66.1 mode are handled as when  is assigned at the head of a block.

(Example 1)

In "G66.1 P1000;" mode, "N100 G01 G90 X100. Z100. F400 R1000 ;" is the same as "N100 G65 P1000 G01 G90 X100. Z200. F400 R1000 ;".

<Note>

- The call is performed even in the G66.1 command block in the G66.1 mode and the correspondence between the argument address and the variable number is the same as for G65 (simple call).

(3) The range of the G and N command values that can be used anew as variables in the G66.1 mode is subject to the restrictions as normal NC command values.

(4) Program number O, sequence numbers N and modal G codes are updated as modal information.

(5) If calling a subprogram numbered with O is enabled, a sub program number starting with O and specified by P command value is called with a priority.
However, when P command value is less than the digit number set with parameter "#8129 Subpro No. select", increase the digit number of command value by adding leading zeros.

(Example)

When parameter "#8129 Subpro No. select"="1", call the subprogram "O0012" with "G66.1 P12" command.

(6) In the following cases, a subprogram of P command value without O No. is called even with a setting to call a subprogram with O No.

- The digit number of P command value is over the digit number of the program number set with parameter "#8129 Subpro No. select".
- A subprogram starting with commanded O No. does not exist.

## 14.4.4 G Code Macro Call

### Function and purpose

User macro subprogram with prescribed program numbers can be called merely by issuing the G code.

### Command format

**Macro call via G code**

```
G** P__ L__  argument ;
```

**Macro call via G code with decimal point**

```
G*.* P__ L__ ;
```

| | |
|---|---|
| G** (G*.*) | G code for macro call |
| P | (*1) |
| L | (*1) |

(*1) Functions as an argument when the macro argument L/P valid function is enabled. (M8 Series)
It cannot be used when the macro argument L/P valid function is disabled.

### Detailed description

(1) The instruction functions in the same way as the instructions below, however, the correspondence between G codes and instructions can be set by parameters. (The parameter settings of the instructions depend on the MTB specifications.)

a: M98 P****;
b: G65 P**** <Argument>;
c: G66 P**** <Argument>;
d: G66.1 P**** <Argument>;

When the parameters corresponding to "c" and "d" above are set, issue the cancel command (G67) either in the user macro or after the call code has been commanded so as to cancel the modal call.

(2) The correspondence between the "G**" (or "G*.*") which conducts the macro call and the macro program number "P****" to be called is set by parameters.

(3) The number of available G codes is up to 538, which is total of the following ones.

- Among G01 through G9999, 10 G codes can be set individually, and 255 G codes by batch setting.
- Among G0.1 through G999.9, 10 G codes can be set individually, and 255 G codes by batch setting.
- Other 8 G codes: G200, G300, G400, G500, G600, G700, G800, G900

(4) G codes used in the system becomes available as G code macro when the parameter "#1081 Gmac_P" is set to "1".

(5) These commands cannot be issued in a program which has been called by a G code macro. If issued in such a program, they will be handled as ordinary G commands.

(6) When ",D" or "<(Character string)>"is commanded in a block that is calling a G code macro, a miscellaneous command macro, or an ASCII macro while the macro argument L/P valid function is enabled, a program error (P33) will occur.
This parameter setting depends on the MTB specifications. (Parameter "#1241 set13/bit5")

(7) The batch setting of macro call via G code is available. The batch setting of up to 255 consecutive macro programs is possible by specifying the first G code, the first program number, the number of consecutive programs, and the type of macro call with the parameters. The same type applies to all macro programs.

(Example)

When the first G code is "152", the first program number is "7625", the number of consecutive programs is "10", and the type is "0".

| G code | Equivalent command |
|---|---|
| G152 | M98 P7625 |
| G153 | M98 P7626 |
| G154 | M98 P7627 |
| : | : |
| G160 | M98 P7633 |
| G161 | M98 P7634 |

(8) The batch setting of macro call via G code with decimal point is available. The batch setting of up to 255 consecutive macro programs is possible by specifying the first G code, the first program number, the number of consecutive programs, and the type of macro call with the parameters. The same type applies to all macro programs.

(Example)

When the first G code is "23.4", the first program number is "9012", the number of consecutive programs is "9", and type is "2".

| G code | Equivalent command |
|---|---|
| G23.4 arguments | G66 P9012 arguments |
| G23.5 arguments | G66 P9013 arguments |
| G23.6 arguments | G66 P9014 arguments |
| : | : |
| G24.1 arguments | G66 P9019 arguments |
| G24.2 arguments | G66 P9020 arguments |

(9) The batch setting of macro call via G code needs to satisfy the following conditions. When the number exceeds the limit, the batch settings of macro call via G code are all invalid.

(First G code + Number of consecutive programs - 1) ≤ 9999

(First program number + Number of consecutive programs - 1) ≤ 99999999

(10) The batch setting of macro call via G code with decimal point needs to satisfy the following conditions. When the number exceeds the limit, the batch settings of macro call via G code with decimal point are all invalid.

(First G code + Number of consecutive programs / 10 - 0.1) ≤ 999.9

(First program number + Number of consecutive programs - 1) ≤ 99999999

(11) When batch setting of macro call via G code duplicates, the command is executed in the following priority from top to bottom.

- Individual settings of macro call via G code (#7201 to #7293)
- Batch settings of macro call via G code (#7421 to #7424)
- Other 8 G code settings: G200, G300, ... , G900 (#7322 to #7393)

(12) When macro call via G code with decimal point duplicates, the command is executed in the following priority from top to bottom.

- Individual settings of macro call via G code with with decimal point (#56501 to #56593)
- Batch settings of macro call via G code with with decimal point (#7431 to #7434)

## 14.4.5 Miscellaneous Command Macro Call (for M, S, T, B Code Macro Call)

### Function and purpose

The user macro subprogram of the specified program number can be called merely by issuing an M (or S, T, B) code. (Registered M code and all S, T and B codes.)

### Command format

**Miscellaneous command macro call**

[M8 Series]

**M** P__ L__ ; (or S** ; , T** ; , B** ;)**

[C80]

**M**; (or S**;, T**;, B**;)**

| | |
|---|---|
| M** | M code for macro call (or S, T, B code) |
| P | (*1) |
| L | (*1) |

(*1) Functions as an argument when the macro argument L/P valid function is enabled. (M8 Series)
It cannot be used when the macro argument L/P valid function is disabled.

### Detailed description

(1) The above instruction functions in the same way as the instructions below, however, the correspondence between M codes and instructions can be set by parameters. (Same for S, T and B codes)

| | |
|---|---|
| a: M98 P**** ; | M98, M** are not output. |
| b: G65 P**** M** ; | |
| c: G66 P**** M** ; | |
| d: G66.1 P**** M** ; | |

When the parameters corresponding to "c" and "d" above are set, issue the cancel command (G67) either in the user macro or after the call code has been commanded so as to cancel the modal call.

(2) The correspondence between the "M**" which conducts the macro call and the macro program number P**** to be called is set by parameters. Up to 10 M codes from M00 to M9999 can be registered.
Note that the codes to be registered should exclude those basically required for the machine and the following M codes.

M0, M1, M2, M30, M96, M97, M98, M99, M198

(3) As with M98, it is displayed on the screen display of the setting and display unit but the M codes and MF are not output.

(4) Even if the registered miscellaneous commands above are issued in a user macro subprogram which are called by an M code, it will not be regarded as a macro call and will be handled as a normal miscellaneous command. (Same for S, T and B codes)

(5) All S, T and B codes call the subprograms in the prescribed program numbers of the corresponding S, T and B functions.

(6) Up to 10 M codes can be set.

<Note>

- When "1" to "3" is set to "#7002 M[01] type", the macro call will be equivalent call to G65/G66/G66.1. In this case, the alphabet before the M,S,T,B code macro is not handled as an argument.
  For example, commanding the M code and T code in the same block changes the operation depending on the order of the address.

  (Example) To register M06 in M code macro

  | | |
  |---|---|
  | M06 T02 | The value of T is treated as variable #20 in macro. The value is entered in the T code at the same time. |
  | T02 M06 | The value is not entered in the variable #20 in macro. The value is entered in the T code. |

(7) The address L and address P can be used as an argument when the macro argument L/P valid function is enabled.
This parameter setting depends on the MTB specifications (parameter "#1241 set13"/bit5).
The argument address L is designated with variable #12 in the macro, and the argument address P with variable #16 in the macro.

(8) When the macro argument L/P function is enabled and the value is designated with macro type "M98", if address L and address P are commanded, a program error (P33) will occur.

(9) Even when the macro argument L/P valid function is enabled, argument codes G, L, N, O, and P are not displayed on the local variable screen.

(10) When ",D" or "<(Character string)>" is commanded in a block that is calling a G code macro, a miscellaneous command macro, or an ASCII code macro while the macro argument L/P valid function is enabled, a program error (P33) will occur.
This parameter setting depends on the MTB specifications. (Parameter "#1241 set13"/bit5)

(11) Even when the miscellaneous function lock signal (AFL) is enabled, the macro call instruction is executed.

## 14.4.6 Detailed Description for Macro Call Instruction

### Detailed description

#### Differences between M98 and G65 commands

(1) The argument can be designated for G65 but not for M98.

(2) The sequence number can be designated for M98, but not for G65, G66 and G66.1.

(3) M98 executes subprograms after all the commands except M, P, H and L in the M98 block are executed, but G65 branches directly to the subprogram without any further operation.

(4) When any address except O, N, P, H or L is included in the M98 block, the single block stop will be conducted, but not for the G65.

(5) The level of the M98 local variables is fixed but it varies in accordance with the nesting depth for G65.
("#1" before and after M98, for instance, has the same significance, but they have different significance in G65.)

(6) The M98 nesting depth extends up to 10 levels (for M8 Series) in combination with G65, G66 and G66.1. The G65 nesting depth extends up to only 4 levels in combination with G66 and G66.1.

#### Macro call command nesting depth

Up to 4 nesting levels are available for macro subprogram calls by simple call or modal call.
The argument for a macro call instruction is valid only within the called macro level. Since the nesting depth for macro calls extends up to 4 levels, the argument can be used as a local variable for the programs of each macro call of each level.

**Note**

(1) When a G65, G66, G66.1 G code macro call or miscellaneous command macro call is conducted, this is regarded as a nesting level and the level of the local variables is also incremented by one.

(2) With modal call A, the designated user macro subprogram is called every time a movement command is executed. However, when the G66 command is duplicated, the next user macro subprogram is called to movement commands in the macro every time an axis is moved.
User macro subprograms are called from the one commanded last.

(Example 1)

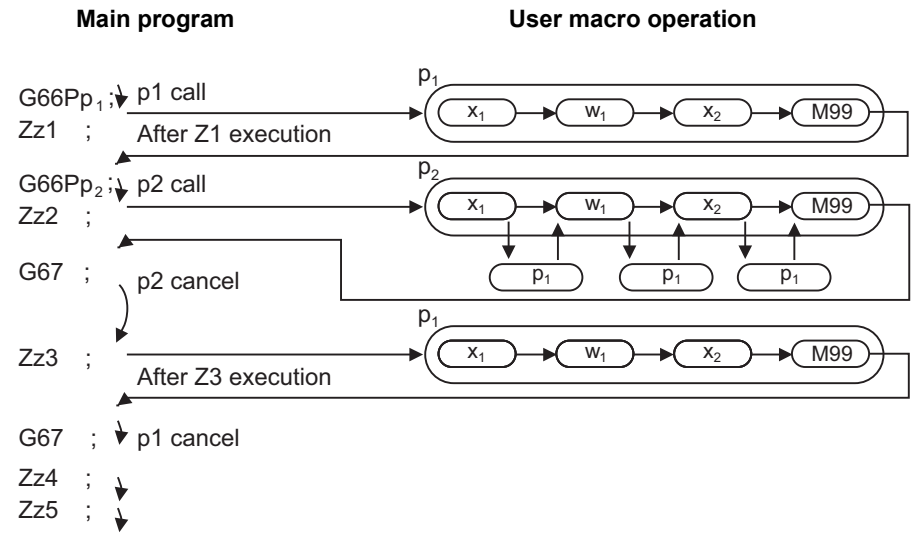

(3) When M98 command is executed in G66 (G66.1) modal, the program designated by G66 (G66.1) will be executed after completing the movement command in the subprogram called by M98 (in case of G66.1, after completing each block).

(Example 2)

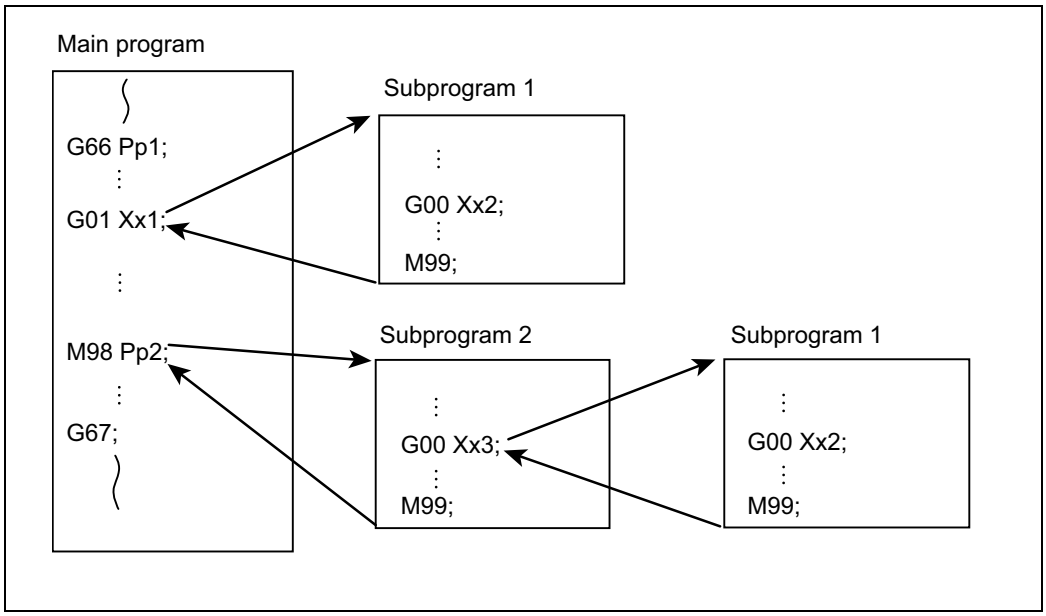


When the program numbers of p1 and p2 are same, the program numbers of subprograms 1 and 2 will be same.

## 14.4.7 Handling the Macro Call Command [C80]

### Function and purpose

Macro call commands (including the subprogram call command M98) are usually treated as executable statements; however, they can be treated in the same manner as macro statements by setting the parameter. A batch processing with commands at the call destination can be performed by treating as macro statements. Movement commands before and after the macro call command are processed continuously; therefore, continuous movement is possible without speed fluctuation.

The validity of this function depends on the MTB specifications (parameter "#1296 ext32/bit5").

### Detailed description

**Example of differences depending on the setting of "#1296 ext32/bit5"**

(1) Details of operation when "#1296 ext32/bit5" is set to "0" (Usual operation)

Call only the subprogram in the macro call command block.

| Main program | Subprogram | Operation |
|---|---|---|
| : | | |
| N20 G01 X100. F1000 ; | | |
| N30 G65 P100 ; | | Call the subprogram "O100". |
| | O100 | |
| | N100 X50. ; | Move to "X50." (execute "N100"). |
| | N200 M99 ; | Return to the main program. |
| N40 X200. ; | | Move to "X200." (execute "N40"). |
| N50 M30 ; | | |

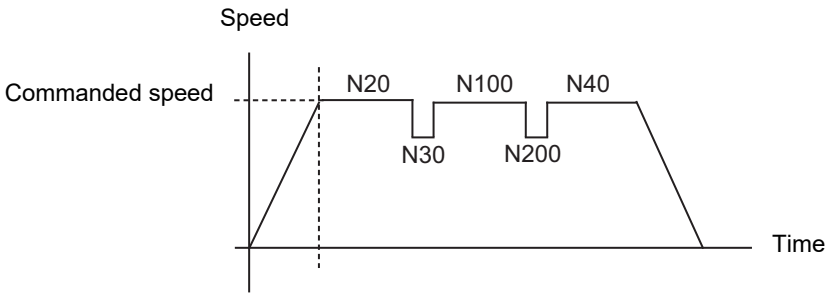

(2) Details of operation when "#1296 ext32/bit5" is set to "1"

Call the subprogram and execute the head block of the subprogram in the macro call command block.

| Main program | Subprogram | Operation |
|---|---|---|
| : | | |
| N20 G01 X100. F1000 ; | | |
| N30 G65 P100 ; | | (1) Execute as follows in "N30". |
| | O100 | Call the subprogram "O100". |
| | N100 X50. ; | Move to "X50." (execute "N100"). |
| | N200 M99 ; | (2) Execute as follows in "N200". |
| N40 X200. ; | | Return to the main program. |
| | | Move to "X200." (execute "N40"). |
| N50 M30 ; | | |

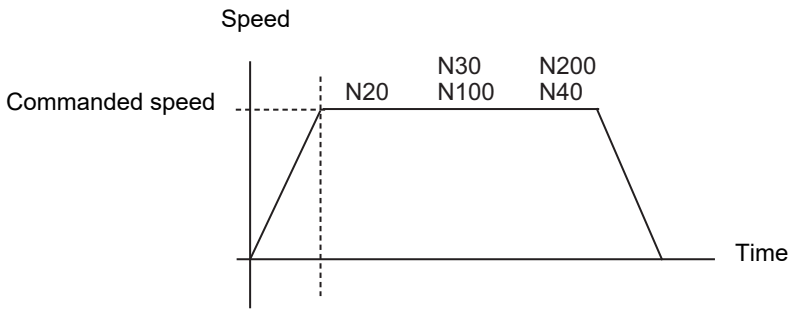


## Detailed description of the operation

(1) The parameter "#1296 ext32/bit5" is valid in the following macro call commands.

G65 Macro simple call (including MSTB macro)

G66.1 Macro modal call B (for each block)

M98 Subprogram call (including MSTB macro)

M99 Return from subprogram

(2) When a command other than O, P, N, L and ",D" is issued in the subprogram call command block, the command is treated as an executable statement. The macro call command is treated as a macro statement even if any address is commanded. When the command is treated as an executable statement, the return command M99 is also treated as an executable statement.

(Example)

M98 P1000 G01 ; This is an executable statement because this includes the address G.

(3) The command is treated as an executable statement during single block operation.

(4) The command is treated as an executable statement when the macro single is valid.

(5) The M99 command to repeat the main program is treated as an executable statement.

(6) This function is valid regardless of the nesting depth. When the macro call commands are successively issued (when the head block of the subprogram is the macro call command), the commands are treated as successive macro statements. However, in the following cases, the commands are treated as executable statements, but not as successive macro statements.

- When the return command M99 from the subprogram is successively issued
- When three or more macro call G65 or G66.1 commands are successively issued

(Example) When the return command from the subprogram is successively issued

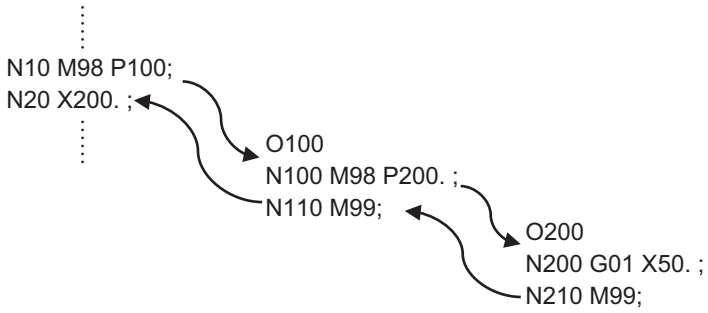


| Operation |
|---|
| (1) Execute as follows in "N10".<br>Call the subprogram "O100".<br>Call the subprogram "O200".<br>Move to "X50." (execute "N200"). |
| (2) Execute as follows in "N210".<br>Return to the subprogram "O100". |
| (3) Execute as follows in "N110".<br>Return to the main program.<br>Move to "X200." (execute "N20"). |

(7) When the miscellaneous command macro call and G code macro call are commanded, the commands whose call type is M98, G65 or G66.1 are treated as macro statements, and the other commands are treated as executable statements.

(8) When the repetition is designated, only the last M99 is treated as a macro statement, and the other M99 commands are treated as executable statements.

(9) The commands are treated as executable statements during high-speed high-accuracy control II (G05P10000) and high-speed high-accuracy control III (G05P20000).

## Precautions

(1) When successive macro statements are commanded immediately before the macro call command is issued, a batch processing for the macro call command and the head block of the subprogram may not be performed depending on the number of macro statement blocks. (Macro statements in up to 32 blocks are processed in a batch.)

(2) When a program error occurs in the head block of the subprogram, the block where the program error occurs depends on the setting of the parameter "#1296 ext32/bit5".

When "#1296 ext32/bit5" is set to "0" (usual operation)

| Main program | Subprogram | Operation |
|---|---|---|
| : | | |
| N20 G01 X100. F1000 ; | | |
| N30 M98 P100 ; | | The program error (P34) occurs in "N30". (The error occurs after the subprogram "O100" is called.) |
| | O100 | |
| | N100 G1234 ; | (Block with invalid G code) |
| | N200 M99 ; | |
| N40 X200. ; | | |
| N50 M30 ; | | |

When "#1296 ext32/bit5" is set to "1"

| Main program | Subprogram | Operation |
|---|---|---|
| : | | |
| N20 G01 X100. F1000 ; | | The program error (P34) occurs in "N20". (The error occurs after the "N20" block is completed.) |
| N30 M98 P100 ; | | |
| | O100 | |
| | N100 G1234 ; | (Block with invalid G code) |
| | N200 M99 ; | |
| N40 X200. ; | | |
| N50 M30 ; | | |

(3) When the batch processing for the macro call command and the head block of the subprogram is performed in the tool radius compensation mode, movement path may differ from that when the batch processing is not performed.

(4) When the movement amount of the block immediately before the macro call command is small, the speed may fluctuate in the macro call block.
In the same way, when the movement amount of the block immediately before the return block from the subprogram is small, the speed may fluctuate in the return block from the subprogram.

## 14.4.8 ASCII Code Macro

### Function and purpose

A macro program can be called out by setting the correspondence of a subprogram (macro program) preregistered with the parameters to codes, and then commanding the ASCII code in the machining program.
This function can be used in addition to the G, M, S, T and B miscellaneous command macro call function.
These parameters depend on the MTB specifications.

**(Execution example 1) M98 type**

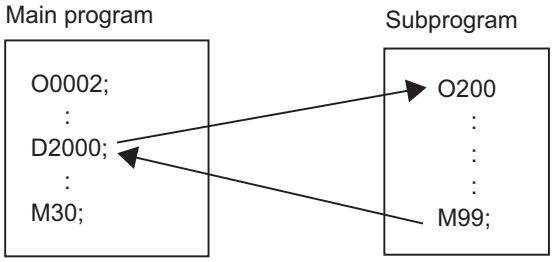


After outputting "2000" to common variable #146, the program No. 200 subprogram is called with the M98 subprogram call type.

Parameters

| | |
|---|---|
| #7401 (ASCII call Valid/Invalid) | 1 (Valid) |
| #7402 (ASCII code) | D |
| #7403 (Call type) | 0 (M98 type) |
| #7404 (Program No.) | 200 |
| #7405 (Common variable) | 146 |

**(Execution example 2) G65 type**

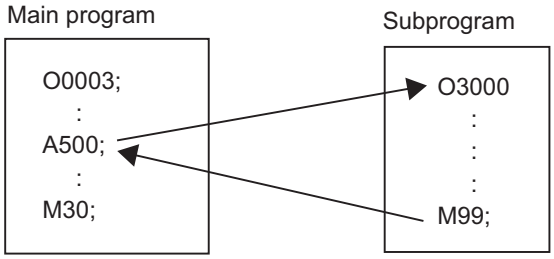


After outputting "500" to local variable #1, the program No. 3000 subprogram is called out with the G65 macro call type.

Parameters

| | |
|---|---|
| #7411 (ASCII call Valid/Invalid) | 1 (Valid) |
| #7412 (ASCII code) | A |
| #7413 (Call type) | 1 (G65 type) |
| #7414 (Program No.) | 3000 |
| #7415 (Common variable) | 100 (Not used) |

## Command format

| |
|---|
| **□**** P__ L__ ; ... Designates the address and code** |

| | |
|---|---|
| □ | ASCII code for calling out a macro (one character) |
| **** | Value or expression output to variable<br>(Setting range: ±999999.9999) |
| P | (*1) |
| L | (*1) |

(*1) Functions as an argument when the macro argument L/P valid function is enabled. (M8 Series)
It cannot be used when the macro argument L/P valid function is disabled.

## Detailed description

(1) The above command performs the same operations as the commands listed below. The correspondence of commands is set for each ASCII code with the parameters.

0 : M98 P****;
1 : G65 P**** <Argument>;
2 : G66 P**** <Argument>;
3 : G66.1 P**** <Argument>;

When parameters corresponding to items “2” and “3” above are set, the modal call will be canceled. Thus, command the cancel command (G67) after commanding the call code or during the user macro.

(2) The ASCII code for calling the macro and the program No. P**** to be called are set with the parameters.
Up to two ASCII codes can be registered.

(3) The code section is output to the variables, but the output destination differs according to the call type and address.

(a) For M98 type

The code section is output to a common variable and the variable No. is set with a parameter.
When corresponding to the first address (parameter #7401), the section is output to the common variable which is indicated by the first variable No. (parameter #7404). (These parameters depend on the MTB specifications.)

(b) For G65/G66/G66.1 type

The code section is output to a local variable. The variable No. differs according to the address, and corresponds to the following table.

| Address | # | Address | # | Address | # |
|---|---|---|---|---|---|
| A | 1 | K | 6 | U | 21 |
| B | 2 | L | 12 | V | 22 |
| C | 3 | M | 13 | W | 23 |
| D | 7 | N | 14 | X | 24 |
| E | 8 | O | 15 | Y | 25 |
| F | 9 | P | 16 | Z | 26 |
| G | 10 | Q | 17 | | |
| H | 11 | R | 18 | | |
| I | 4 | S | 19 | | |
| J | 5 | T | 20 | | |

<Note>

- The following addresses can be used.

A, B, D, F, H, I, J, K, M, Q, R, S, T

(4) When ",D" or "<(Character string)>"is commanded in a block that is calling a G code macro, a miscellaneous command macro, or an ASCII macro while the macro argument L/P valid function is enabled, a program error (P33) will occur.
This parameter setting depends on the MTB specifications. (Parameter "#1241 set13/bit5")

## Program example

The figure below describes s a program that controls the tailstock with address A and machines a long thin work-piece.

| | |
|---|---|
| #7411 (ASCII [02] Valid/Invalid) | 1 (Valid) |
| #7412 (ASCII [02] Code) | A |
| #7413 (ASCII [02] Type) | 1 (G65 type) |
| #7414 (ASCII [01] Program No.) | 500 |
| #7415 (ASCII [01] Variable) | 100 (Not used) |

```
Main program                          Subprogram
G28 XZ;                               O500;
A1;                Call O500          IF[#1 EQ 0]GOTO 10;
G00 X20. Z0.;                         G53 G00 A-205.;        Tailstock advance
G01 X15. F100;                        G53 G01 A-200. F100;
G01 Z100. F200;                       GOTO N20;
X50 Z120 ;                            N10 M26 ;
A0;                Call O500          G53 G0 A-400.;         Tailstock retract
M30 ;                                 N20 M99 ;
```

Address A is converted into G65 P500.

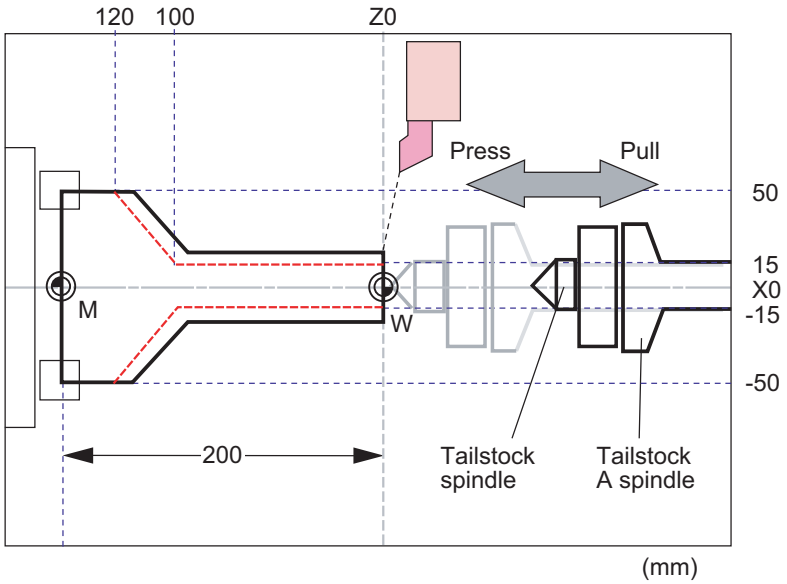

## Precautions

### Calling a macro with an ASCII code from a macro-called program

A macro cannot be called with an ASCII code from a macro-called program with an ASCII code.
The other patterns are shown below.
If it is judged that a macro cannot be called, the command will be handled as a normal command.

| | | Called side | | | |
|---|---|---|---|---|---|
| | | ASCII | GMSTB macro | G65/66/66.1 | M98 |
| Calling side | ASCII | × | × | ○ | ○ |
| | GMSTB macro | × | × | ○ | ○ |
| | G65/66/66.1 | ○ | ○ | ○ | ○ |
| | M98 | ○ | ○ | ○ | ○ |

### Nest level of macro call commands

Up to 4 nesting levels are available for macro subprogram calls using simple call (G65) and modal call (G66/G66.1).
The macro call command's argument is valid only in the called macro level.
Since the macro call nest level is four, the argument can be used in the program as a local variable for each macro call.

### Nest level of subprogram call command

Counting the main program as 0, up to ten levels of subprograms can be called (M98) from a subprogram.
The following commands are used for subprogram nesting.

(1) M98
(2) G65 G66 G66.1
(3) G code call Miscellaneous function call (M/S/T/B)
(4) MDI interruption
(5) Automatic tool length measurement
(6) Multiple-step skip function

The following commands can be issued regardless of nesting.

(7) Fixed cycles
(8) Macro interruption

### Order of command priority

If "M" is designated for the ASCII code address, it may overlap with the codes basically necessary for that machine. In this case, commands will be identified with the following priority using code values.

(1) M98, M99, M198 (subprogram call command)
M00 (program stop command)
M01 (optional stop command)
M02, M30 (end command)
M96, M97 (macro interruption command)

(2) When corresponding to miscellaneous code (M) call macro command

(3) When corresponding to ASCII code macro command

(4) Used as normal miscellaneous command

If "S", "T" and "B" are designated for the ASCII code address, commands will be identified with the following priority.

(1) When corresponding to miscellaneous code (S, T, B) call macro command

(2) When corresponding to ASCII code macro command

(3) Used as normal command

If the other addresses do not correspond to the ASCII code macro command, they will be identified as normal commands. If the command to be used, overlaps with an ASCII code macro command, it must be commanded in the macro-called program with the ASCII code.
Note that there are cases where the command will be unconditionally handled as a normal command, as explained in below.

### Conditions where the address set is handled as a normal command

(1) When there is a data setting command (G10) in the same block.

(2) When ASCII code macro call is executed after the G code macro call command in the same block (also applies for M, S, T, B and ASCII)

(Example) When address "D" (G65 type) is set in the ASCII code macro, and M50 is set in the macro call (G65 type).

```
M50 D200 ; Execute M code macro with argument (200 set in #7)
```

(3) When inputting parameters

(4) When there is a comma (,) before the address. (For example, ",D", ",R", etc.)

(5) When commanded in fixed cycle

(6) When commanded in macro subprogram called with G code macro call
(Also applies when macro is called with M, S, T, B or ASCII)

# 14.5 Variables Used in User Macros

## Function and purpose

Both the variable specifications and user macro specifications are required for the variables that are used with the user macros.
The compensation amounts of the local, common and system variables among the variables for this NC system except #33 are retained even when the unit's power is switched off. (Common variables can also be cleared by parameter "#1129 PwrVCl".)

## Detailed description

### Use of multiple variable

When the user macro specifications are applied, variable Nos. can be turned into variables (multiple uses of variables) or replaced by <formula>.
Only one of the four basic arithmetic rule (+, -, * , / ) operations can be conducted with <formula>.

(Example 1) Multiple uses of variables

```
#1=10  #10=20  #20=30 ;
#5=# [#[#1]] ;          # [# [#1]] = # [#10] from #1 = 10.
                        # [#10] = #20 from #10 = 20.
                        Therefore, #5 = #20 or #5 = 30.
```

```
#1=10 #10 =20 #20=30 #5=1000;
#[#[#1]]=#5;            # [# [#1]] = # [#10] from #1 = 10.
                        # [#10] = #20 from #10 = 20.
                        Therefore, #20 = #5 or #20 = 1000.
```

(Example 2) Example of multiple designations of variables

```
#10=5;          <Formula>##10 = 100; is handled in the same manner as # [#10] = 100.
##10=100 ;      In which case, #5 = 100.
```

(Example 3) Replacing variable Nos. with <formula>

```
#10=5 ;
#[#10 + 1] =  1000 ;        In which case, #6 = 1000.
#[#10 - 1] = -1000 ;        In which case, #4 = -1000.
#[#10 * 3] =  100 ;         In which case, #15 = 100.
#[#10/2] = -100 ;           In which case, #2 = -100.
```

### Undefined variables

When applying the user macro specifications, variables which have not been used even once after the power was switched on or local variables which were not specified by the G65, G66 or G66.1 commands, can be used as <Blank>. Also, variables can forcibly be set to <Blank>.
Variable #0 is always used as the <Blank> and cannot be defined in the left-side member.

(1) Arithmetic expressions

| | |
|---|---|
| #1 = #0; | #1 = <Blank> |
| #2 = #0 + 1; | #2 = 1 |
| #3 = 1 + #0; | #3 = 1 |
| #4 = #0 * 10; | #4 = 0 |
| #5 = #0 + #0; | #5 = 0 |

Note that <Blank> in an arithmetic expression is handled in the same way as 0.
<Blank> + <Blank> = 0
<Blank> + <Constant> = Constant
<Constant> + <Blank> = Constant

(2) Variable quotations
When only the undefined variables are quoted, they are ignored including the address itself.
When #1 = <Blank>

| | |
|---|---|
| G00 X#1 Z1000 ; | Equivalent to G00 Z1000 ; |
| G00 X#1+10 Z1000 ; | Equivalent to G00 X10 Z1000 ; |

(3) Conditional expressions
<Blank> differs from "0", only for EQ and NE. (#0 is <Blank>.)

| When #101 = <Blank> | When #101 = 0 |
|---|---|
| #101EQ#0<br><Blank> = <Blank> Established | #101EQ#0<br>0 = <Blank> Not established |
| #101NE0<br><Blank> ≠ 0 Established | #101NE0<br>0 ≠ 0 Not established |
| #101GE#0<br><Blank> >= <Blank> Established | #101GE#0<br>0 >= <Blank> Established |
| #101GT0<br><Blank> > 0 Not established | #101GT0<br>0 > 0 Not established |
| #101LE#0<br><Blank> <= <Blank> Established | #101LE#0<br>0 <= <Blank> Established |
| #101LT0<br><Blank> < 0 Not established | #101LT0<br>0 < 0 Not established |

**Note**

(1) EQ and NE should be compared only for integers. For comparison of numeric values with decimals, GE, GT, LE, and LT should be used.

## 14.5.1 Common Variables

### Detailed description

Common variables can be used commonly from any position. Number of the common variables sets depends on the specifications.
Refer to the explanation about Variable Commands for details.

#### Variable name setting and quotation

Any name (variable name) can be given to common variables #500 to #599. It must be composed of not more than 7 alphanumerics and it must begin with a letter. Do not use "#" in variable names. It causes an alarm when the program is executed.

| **SETVNn [ NAME1,NAME2, .....] ;** | |
|---|---|
| n | Head No. of variable to be named (500 to 599) |
| NAME1 | #n name (variable name) |
| NAME2 | #n + 1 name (variable name) |

Variable names are separated by a comma (,).

(1) Once variable names have been set, they will not be cleared even when the power is turned off.
(2) Variables in programs can be quoted by their variable names. In this case, the variables should be enclosed in square parentheses [ ].
(Example 1) G01X [#POINT1] ;
(3) The variable Nos., data and variable names are displayed on the screen of the setting and display unit.
(Example 2)
Program... SETVN500 [A234567, DIST, TOOL25] ;

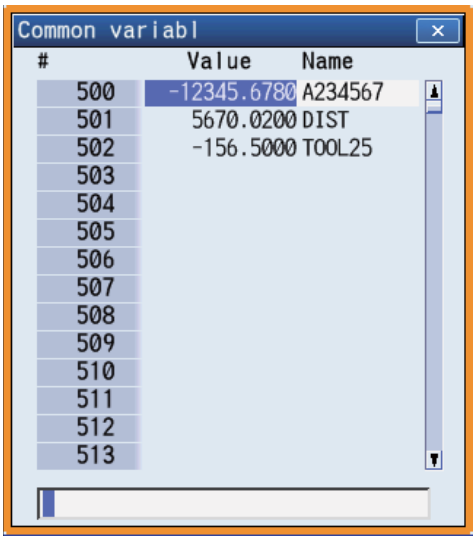


**Note**

(1) Do not use characters (SIN, COS, etc.) predetermined by the NC and used for operation commands at the head of a variable name.

## 14.5.2 Local Variables (#1 to #33)

### Detailed description

Local variables can be defined as an <argument> when a macro subprogram is called, and also used locally within main programs and subprograms. They can be duplicated because there is no relationship between macros. (up to 4 levels)

| |
|---|
| **G65 P__ L__ <argument> ;** |

| | |
|---|---|
| P | Program No. |
| L | Number of repetitions |

The <argument> is assumed to be Aa1 Bb1 Cc1..... Zz1.

The following table shows correspondences points between the addresses designated by <argument> and the local variable numbers used in the user macro main bodies.

**[Argument designation I]**

| Call command | | Argument address | Local variable No. |
|---|---|---|---|
| G65 G66 | G66.1 | | |
| ○ | ○ | A | #1 |
| ○ | ○ | B | #2 |
| ○ | ○ | C | #3 |
| ○ | ○ | D | #7 |
| ○ | ○ | E | #8 |
| ○ | ○ | F | #9 |
| × | × * | G | #10 |
| ○ | ○ | H | #11 |
| ○ | ○ | I | #4 |
| ○ | ○ | J | #5 |
| ○ | ○ | K | #6 |
| Δ | Δ * | L | #12 |
| ○ | ○ | M | #13 |
| × | × * | N | #14 |
| × | × | O | #15 |
| Δ | Δ * | P | #16 |
| | | | |

| Call command | | Argument address | Local variable No. |
|---|---|---|---|
| G65 G66 | G66.1 | | |
| ○ | ○ | Q | #17 |
| ○ | ○ | R | #18 |
| ○ | ○ | S | #19 |
| ○ | ○ | T | #20 |
| ○ | ○ | U | #21 |
| ○ | ○ | V | #22 |
| ○ | ○ | W | #23 |
| ○ | ○ | X | #24 |
| ○ | ○ | Y | #25 |
| ○ | ○ | Z | #26 |
| | | - | #27 |
| | | - | #28 |
| | | - | #29 |
| | | - | #30 |
| | | - | #31 |
| | | - | #32 |
| | | - | #33 |

"×" in the above table denotes argument addresses which cannot be used. However, provided that the G66.1 mode has been established, an argument address denoted by the asterisk can be added for use.
The hyphen (-) mark indicates that there is no corresponding address.
A "Δ" mark denotes an argument address which may be used depending on the MTB specifications. (Parameter "#1241 set13"/bit5)

**[Argument designation II]**

| Argument designation II address | Variable in macro |
|---|---|
| A | #1 |
| B | #2 |
| C | #3 |
| I1 | #4 |
| J1 | #5 |
| K1 | #6 |
| I2 | #7 |
| J2 | #8 |
| K2 | #9 |
| I3 | #10 |
| J3 | #11 |
| K3 | #12 |
| I4 | #13 |
| J4 | #14 |
| K4 | #15 |
| I5 | #16 |
| | |

| Argument designation II address | Variable in macro |
|---|---|
| J5 | #17 |
| K5 | #18 |
| I6 | #19 |
| J6 | #20 |
| K6 | #21 |
| I7 | #22 |
| J7 | #23 |
| K7 | #24 |
| I8 | #25 |
| J8 | #26 |
| K8 | #27 |
| I9 | #28 |
| J9 | #29 |
| K9 | #30 |
| I10 | #31 |
| J10 | #32 |
| K10 | #33 |

<Note>

- The numbers 1 to 10 accompanying I, J and K indicate the sequence of the commanded sets, and are not required in the actual command.

(1) Local variables in subprograms can be defined by means of the <argument> designation during macro call. (Local variables can be used freely in those subprograms.)

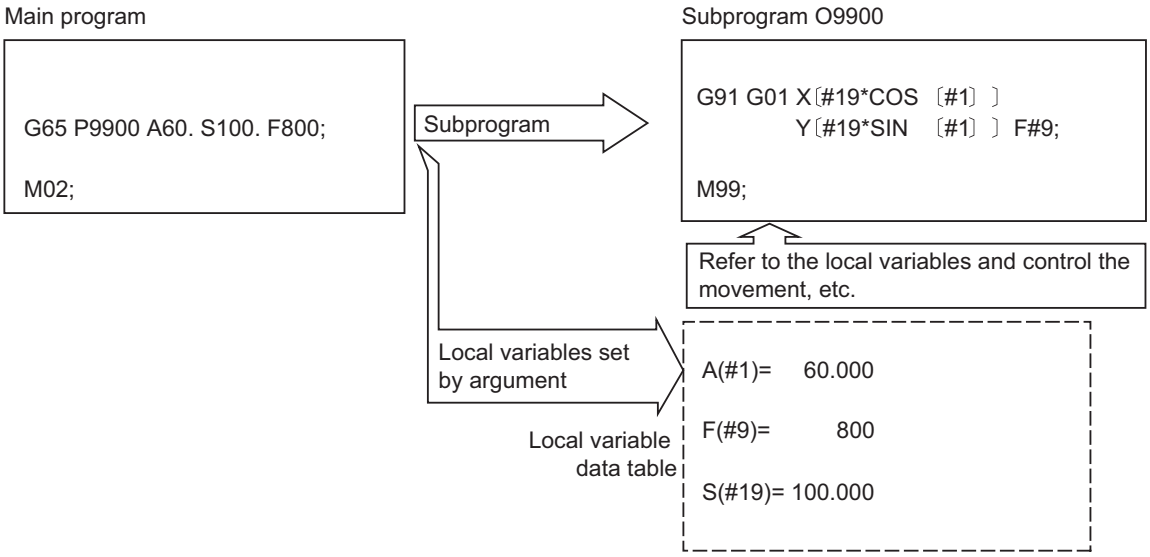

(2) Local variables can be used independently on each of the macro call levels (4 levels).
Local variables are also provided independently for the main program (macro level 0).
Arguments cannot be used for the level 0 local variables.

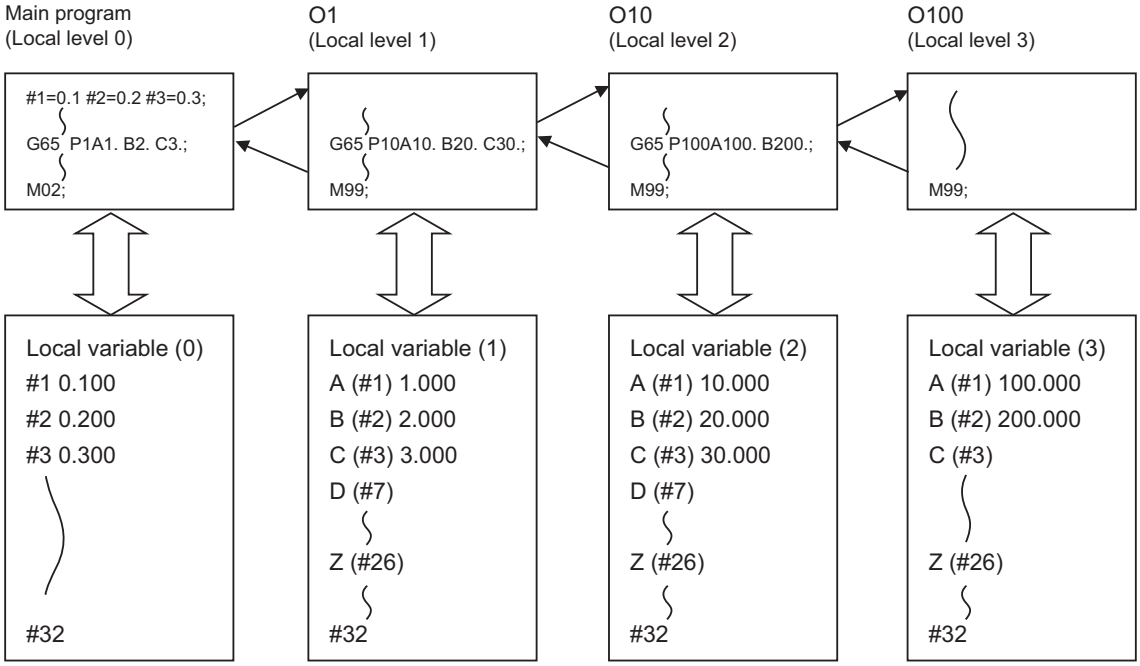


The status of the local variables is displayed on the setting and display unit.
Refer to the Instruction Manual for details.

## 14.5.3 System Variables

Data such as the workpiece offset amount can be read using system variables other than common variables or local variables.
Refer to "23 System Variables" for details.

# 14.6 User Macro Commands

## 14.6.1 Operation Commands

### Function and purpose

A variety of operations can be performed between variables.

### Command format

```
#i = <formula> ;
```

<Formula> is a combination of constants, variables, functions and operators.
Constants can be used instead of #j and #k below.

| | | | |
|---|---|---|---|
| (1) | Definition and substitution of variables | #i = #j | Definition, substitution |
| (2) | Addition operation | #i = #j + #k | Addition |
| | | #i = #j - #k | Subtraction |
| | | #i = #j OR #k | Logical sum (at every bit of 32 bits) |
| | | #i = #j XOR #k | Exclusive OR (at every bit of 32 bits) |
| (3) | Multiplication operation | #i = #j * #k | Multiplication |
| | | #i = #j / #k | Division |
| | | #i = #j MOD #k | Remainder |
| | | #i = #j AND #k | Logical product (at every bit of 32 bits) |
| (4) | Functions | #i = SIN [#k] | Sine |
| | | #i = COS [#k] | Cosine |
| | | #i = TAN [#k] | Tangent tan θ uses sinθ/cosθ. |
| | | #i = ASIN [#k] | Arcsine |
| | | #i = ATAN [#k] | Arctangent (ATAN or ATN may be used) |
| | | #i = ACOS [#k] | Arccosine |
| | | #i = SQRT [#k] | Square root (SQRT or SQR may be used) |
| | | #i = ABS [#k] | Absolute value |
| | | #i = BIN [#k] | Conversion from BCD to BIN |
| | | #i = BCD [#k] | Conversion from BIN to BCD |
| | | #i = ROUND[#k] | Rounding off (ROUND or RND may be used) |
| | | #i = FIX [#k] | Discarding fractions after decimal point |
| | | #i = FUP [#k] | Add for fractions less than 1 |
| | | #i = LN [#k] | Natural logarithm |
| | | #i = EXP [#k] | Exponent with e (=2.718 .....) as bottom |
| | | #i = POW [#j, #k] | Power [M8] |

### Note

(1) A value without a decimal point is basically treated as a value with a decimal point at the end (1 = 1.000).

(2) Compensation amounts from #10001 and workpiece coordinate system compensation values from #5201 are handled as data with a decimal point. Consequently, data with a decimal point will be produced even when data without a decimal point have been defined in the variable numbers.

(Example)

| Operation Commands | Common variables after execution |
|---|---|
| #101 = 1000 ;<br>#10001 = #101 ;<br>#102 = #10001 ; | #101 1000.000<br>#102 1000.000 |

(3) The <formula> after a function must be enclosed in the square parentheses [ ].

## Detailed description

### Sequence of operations

(1) The sequence of the operations (a) to (c) is performed in the following order; the function, the multiplication operation and the addition operation.

#101=#111+#112*SIN〔#113〕

(a) Function
(b) Multiplication operation
(c) Addition operation

(2) The part to be given priority in the operation sequence should be enclosed in square parentheses [ ]. Up to 5 pairs of such parentheses, including those for the functions, may be used.

#101=SQRT〔〔〔#111-#112〕*SIN〔#113〕+#114〕*#115〕;

First pair of brackets
Second pair of brackets
Third pair of brackets

**Examples of operation commands**

| | | | | |
|---|---|---|---|---|
| (1) | Main program and argument designation | G65 P100 A10 B20.;<br>#101 = 100.000 #102 = 200.000; | #1 10.000<br>#2 20.000<br>#101 100.000<br>#102 200.000 | |
| (2) | Definition and substitution<br>= | #1 = 1000<br>#2 = 1000. | #1 1000.000<br>#2 1000.000 | |
| | | #3 = #101<br>#4 = #102 | #3 100.000<br>#4 200.000 | From common variables |
| | | #5 = #10001 (#10001 = -10.) | #5 -10.000 | From tool compensation |
| (3) | Addition and subtraction<br>+ - | #11 = #1 + 1000<br>#12 = #2 - 50.<br>#13 = #101 + #1<br>#14 = #10001 - 3. (#10001 = -10.)<br>#15 = #10001 + #102 | #11 2000.000<br>#12 950.000<br>#13 1100.000<br>#14 -13.000<br>#15 190.000 | |
| (4) | Multiplication and division<br>* / | #21 = 100 * 100<br>#22 = 100. * 100<br>#23 = 100 * 100.<br>#24 = 100. * 100.<br>#25 = 100 / 100<br>#26 = 100. / 100<br>#27 = 100 / 100.<br>#28 = 100. / 100.<br>#29 = #10001 * #101 (#10001 = -10.)<br>#30 = #10001 / #102 | #21 10000.000<br>#22 10000.000<br>#23 10000.000<br>#24 10000.000<br>#25 1.000<br>#26 1.000<br>#27 1.000<br>#28 1.000<br>#29 -1000.000<br>#30 -0.050 | |
| (5) | Remainder<br>MOD | #19 = 48<br>#20 = 9<br>#31 = #19 MOD #20 | #19/#20 = 48/9 = 5 Remainder 3<br>#31 = 3 | |
| (6) | Logical sum<br>OR | #3 = 100<br>#4 = #3 OR 14 | #3 = 01100100 (binary)<br>14 = 00001110 (binary) | |
| | | | #4 = 01101110 = 110 | |
| (7) | Exclusive OR<br>XOR | #3 = 100<br>#4 = #3 XOR 14 | #3 = 01100100 (binary)<br>14 = 00001110 (binary) | |
| | | | #4 = 01101010 = 106 | |
| (8) | Logical product<br>AND | #9 = 100<br>#10 = #9 AND 15 | #9 = 01100100 (binary)<br>15 = 00001111 (binary) | |
| | | | #10 = 00000100 = 4 | |
| (9) | Sine<br>SIN | #501 = SIN [60]<br>#502 = SIN [60.]<br>#503 = 1000 * SIN [60]<br>#504 = 1000 * SIN [60.]<br>#505 = 1000. * SIN [60]<br>#506 = 1000. * SIN [60.]<br><Note><br>♦SIN [60] is equivalent to SIN [60.] | #501<br>#502<br>#503<br>#504<br>#505<br>#506 | 0.866<br>0.866<br>866.025<br>866.025<br>866.025<br>866.025 |
| (10) | Cosine<br>COS | #541 = COS [45]<br>#542 = COS [45.]<br>#543 = 1000 * COS [45]<br>#544 = 1000 * COS [45.]<br>#545 = 1000. * COS [45]<br>#546 = 1000. * COS [45.]<br><Note><br>♦COS [45] is equivalent to COS [45.] | #541<br>#542<br>#543<br>#544<br>#545<br>#546 | 0.707<br>0.707<br>707.107<br>707.107<br>707.107<br>707.107 |

| | | | |
|---|---|---|---|
| (11) Tangent<br>TAN | #551 = TAN [60]<br>#552 = TAN [60.]<br>#553 = 1000 * TAN [60]<br>#554 = 1000 * TAN [60.]<br>#555 = 1000. * TAN [60]<br>#556 = 1000. * TAN [60.]<br><Note><br>♦TAN [60] is equivalent to TAN [60.] | #551<br>#552<br>#553<br>#554<br>#555<br>#556 | 1.732<br>1.732<br>1732.051<br>1732.051<br>1732.051<br>1732.051 |
| (12) Arcsine<br>ASIN | #531 = ASIN[100.500 / 201.]<br>#532 = ASIN[100.500 / 201]<br>#533 = ASIN[0.500]<br>#534 = ASIN[-0.500] | #531<br>#532<br>#533<br>#534 | 30.000<br>30.000<br>30.000<br>-30.000 |
| | | <Note><br>♦When #1273/bit 0 is set to 1, #534 will be 330°. | |
| (13) Arctangent<br>ATN<br>or<br>ATAN | #561 = ATAN [173205 / 100000]<br>#562 = ATAN [173205 / 100000.]<br>#563 = ATAN [173.205 / 100]<br>#564 = ATAN [173.205 / 100.]<br>#565 = ATAN [1.73205] | #561<br>#562<br>#563<br>#564<br>#565 | 60.000<br>60.000<br>60.000<br>60.000<br>60.000 |
| (14) Arccosine<br>ACOS | #521 = ACOS [100 / 141.421]<br>#522 = ACOS [100. / 141.421] | #521<br>#522 | 45.000<br>45.000 |
| (15) Square root<br>SQR<br>or<br>SQRT | #571 = SQRT [1000]<br>#572 = SQRT [1000.]<br>#573 = SQRT [10. * 10. + 20. * 20]<br><Note><br>♦In order to increase the accuracy, proceed with the operation inside parentheses as much as possible. | #571<br>#572<br>#573 | 31.623<br>31.623<br>22.360 |
| (16) Absolute value<br>ABS | #576 = -1000<br>#577 = ABS [#576]<br>#3 = 70. #4 = -50.<br>#580 = ABS [#4 - #3] | #576<br>#577<br><br>#580 | -1000.000<br>1000.000<br><br>120.000 |
| (17) BIN, BCD | #1 = 100<br>#11 = BIN [#1]<br>#12 = BCD [#1] | #11<br>#12 | 64<br>256 |
| (18) Rounding off<br>RND<br>or<br>ROUND | #21 = ROUND [14 / 3]<br>#22 = ROUND [14. / 3]<br>#23 = ROUND [14 / 3.]<br>#24 = ROUND [14. / 3.]<br>#25 = ROUND [-14 / 3]<br>#26 = ROUND [-14. / 3]<br>#27 = ROUND [-14 / 3.]<br>#28 = ROUND [-14. / 3.] | #21<br>#22<br>#23<br>#24<br>#25<br>#26<br>#27<br>#28 | 5<br>5<br>5<br>5<br>-5<br>-5<br>-5<br>-5 |
| (19) Discarding fractions below decimal point<br>FIX | #21 = FIX [14 / 3]<br>#22 = FIX [14. / 3]<br>#23 = FIX [14 / 3.]<br>#24 = FIX [14. / 3.]<br>#25 = FIX [-14 / 3]<br>#26 = FIX [-14. / 3]<br>#27 = FIX [-14 / 3.]<br>#28 = FIX [-14. / 3.] | #21<br>#22<br>#23<br>#24<br>#25<br>#26<br>#27<br>#28 | 4.000<br>4.000<br>4.000<br>4.000<br>-4.000<br>-4.000<br>-4.000<br>-4.000 |
| (20) Adding fractions less than 1<br>FUP | #21 = FUP [14 / 3]<br>#22 = FUP [14. / 3]<br>#23 = FUP [14 / 3.]<br>#24 = FUP [14. / 3.]<br>#25 = FUP [-14 / 3]<br>#26 = FUP [-14. / 3]<br>#27 = FUP [-14 / 3.]<br>#28 = FUP [-14. / 3.] | #21<br>#22<br>#23<br>#24<br>#25<br>#26<br>#27<br>#28 | 5.000<br>5.000<br>5.000<br>5.000<br>-5.000<br>-5.000<br>-5.000<br>-5.000 |

| | | | |
|---|---|---|---|
| (21) Natural logarithms LN | #10 = LN [5]<br>#102 = LN [0.5]<br>#103 = LN [-5] | #101<br>#102<br>Error | 1.609<br>-0.693<br>"P282" |
| (22) Exponents EXP | #104 = EXP [2]<br>#105 = EXP [1]<br>#106 = EXP [-2] | #104<br>#105<br>#106 | 7.389<br>2.718<br>0.135 |
| (23) Power POW [M8] | #107 = POW [2, 3]<br>#108 = POW [2, -3]<br>#109 = POW [2.5, 3.5]<br>#110 = POW [0, -1]<br>#111 = POW [-2, 2.5] | #107<br>#108<br>#109<br>Error<br>Error | 8.000<br>0.125<br>24.705<br>"P282"<br>"P282" |

## Precautions

(1) Notes on logical relation

EQ, NE, GT, LT, GE and LE conduct the same calculation as addition and subtraction. Pay careful attention to errors. For example, to determine whether or not #10 and #20 are equal in the following example, it is not always possible to judge correctly because of the error.

IF [#10 EQ #20]

Therefore when the difference between #10 and #20 falls within the designated error range, both values should be considered equal.

IF [ABS [#10 - #20] LT 0.01]

(2) If an operation command using a function is executed, a program error (P282) will occur when:

- A number that sets cosθ to "0" has been designated in the argument of the tangent command (TAN).
- A negative number has been designated in the argument of the square root command (SQR).
- A negative number has been designated in the argument of the logarithm natural command (LN).
- "0" has been set to argument 1 and "0" or less to argument 2 in the power command (POW). [M8]
- A negative number has been set to argument 1 and a non-integer to argument 2 in the power command (POW). [M8]

(3) A method of processing macro operation (*1) can be changed. (This depends on the MTB specifications (parameter "1259 set31/bit7").)
When this is set to "0" (high speed), a high-speed macro operation is available because display update data will not be created.

(*1) This specifies whether to update the display data every time the certain number of macro blocks are executed for processing consecutive macro blocks.

## 14.6.2 Control Commands

### Function and purpose

The flow of programs can be controlled by "IF-GOTO-", "IF-THEN-ELSE-ENDIF", and "WHILE-DO-".
When a program in an external device such as a USB memory device is executed, a period of processing time is required in the subprogram call or in the instruction to change the flow of the program such as GOTO or DO-END; therefore, interpolation may be decelerated or stopped.

### Detailed description

**Branch (IF-GOTO-)**

**IF [conditional expression] GOTO n; (n = sequence number in the program)**

When the condition is satisfied, control branches to "n" and when it is not satisfied, the next block is executed.
IF [conditional expression] can be omitted and, when it is, control branches to "n" unconditionally.
The following types of [conditional expressions] are available.

| | |
|---|---|
| #i EQ #j | = When #i and #j are equal |
| #i NE #j | ≠ When #i and #j are not equal |
| #i GT #j | > When #i is greater than #j |
| #i LT #j | < When #i is less than #j |
| #i GE #j | >= When #i is #j or more |
| #i LE #j | <= When #i is #j or less |

"n" of "GOTO n" must always be in the same program. If not, program error (P231) will occur. A formula or variable can be used instead of i, #j and n.
In the block with sequence number "n" which will be executed after a "GOTO n" command, the sequence number "Nn" must always be at the head of the block. Otherwise, program error (P231) will occur.
If "/" is at the head of the block and "Nn" follows, control can be branched to the sequence number.

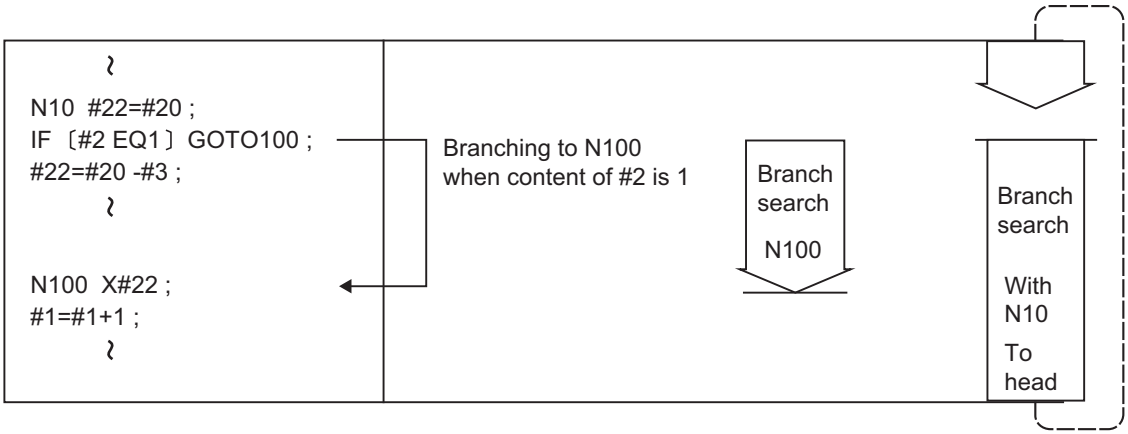


**Note**

(1) When searching the sequence number of the branch destination, the search is conducted up to the end of the program (% code) from the block following IF.....; and if it is not found, it is then conducted from the top of the program to the block before IF.....;. Therefore, branch searches in the opposite direction to the program flow will take longer time compared with branch searches in the forward direction.

(2) EQ and NE should be compared only for integers. For comparison of numeric values with decimals, GE, GT, LE, and LT should be used.

## Branch (IF-THEN-ELSE-ENDIF)

| | |
|---|---|
| (a) | IF [conditional expression] THEN ;<br>Macro statement or executable statement<br>:<br>ELSE ;<br>Macro statement or executable statement<br>:<br>ENDIF ; |
| (b) | IF [conditional expression] THEN operation command ;<br>ELSE operation command ; |
| (c) | IF [conditional expression] THEN operation command ELSE operation command ; |

(1) When the condition is satisfied, THEN-side processing is executed. Otherwise, ELSE-side processing is executed.

(2) Designate the conditional expression in the same way as for the "IF-GOTO-" command.

(3) If neither the THEN nor ELSE command is designated in the same block as for the IF command (the IF statement is commanded alone), a program error (P33) will occur.

(4) When the run command has an executable statement or multiple commands are designated, enclose them in the IF, THEN, ELSE, and ENDIF rows as shown in format (a).

(5) If the run command is an operation instruction, it can be described following THEN or ELSE as shown in formats (b) and (c).

(6) If the ENDIF command is omitted in format (a), a program error (P289) will occur.
In format (b) or (c), the ENDIF command can be described like format (a).
When the IF statement is used as a nesting in format (b) or (c), designate the ENDIF command.

<Example> When the IF statement is used as a nesting, the operation is performed as shown below.

```
IF[ #100 EQ 0 ] THEN ;                A
IF[ #110 EQ 1 ] THEN #120 = 10 ;      B
ENDIF ;                               C
ELSE ;
#120 = 20;
ENDIF ;
```

[Operation]

The following operation is performed depending on whether the ENDIF command is designated in "C".

- ENDIF command designated: ELSE processing is executed when the IF condition of A is false.
- ENDIF command undesignated: ELSE processing is executed when the IF condition of B is false.

(7) The THEN-side processing or ELSE-side processing can be omitted in any of formats (a) to (c).

| | |
|---|---|
| When ELSE-side processing is omitted: | IF[ #100 EQ 0 ] THEN ;<br>#100 = 2 ;<br>G00 X#101 ;<br>ENDIF ; |
| When THEN-side processing is omitted: | IF[ #100 EQ 0] ELSE #110 =10 ; |

(8) Formats (a) and (b) can be combined to issue commands.

```
IF[ #100 EQ 0 ] THEN ;
#100 = 2 ;
G00 X#101 ;
ELSE #110 =10 ;
ENDIF ;
```

(9) If any of THEN, ELSE, and ENDIF is commanded with no IF command issued, a program error (P289) will occur.

(10) The IF statement can be commanded up to 10 nesting levels.
When the nesting level exceeds 10, a program error (P288) will occur.
The following shows an example in which the nesting level is set to 3.

```
IF[ #100 EQ 0 ] THEN ;
IF[ #110 GT #111 ] THEN ;
  :
ELSE ;
IF[ #120 EQ #121 ] THEN ;
  :
ELSE ;
  :
ENDIF ;
ENDIF ;
ELSE ;
  :
ENDIF ;
```

3 2 1

(11) You can set a branch from the inside of the IF to ENDIF range to the outside.

```
IF[ #100 EQ 0 ] THEN ;
IF[ #110 GT #111 ] GOTO100 ;
  :
ENDIF ;
  :
N100 ;
  :
```

(12) Do not set a branch to the inside of the IF to ENDIF range, including the ENDIF block. Branching disables the skipped IF command and executes all the commands designated up to the ENDIF command that is paired with the IF command.

```
IF[ #110 GT #111 ] GOTO100 ;
  :
IF[ #100 EQ 0 ] THEN ;
  :
N100 ;
  :
ENDIF ;
```

(13) If IF to ENDIF is intersected with WHILE-DO to END, a program error (P288, P289, or P294) will occur.

```
WHILE[ #110 GT #111 ] DO1;  -------- A
  :
IF[ #100 EQ 0 ] THEN;  ---------- B
  :
END1;  ---------------------------------- C
  :
ENDIF;
```

Not possible

If "A" to "C" are repeated 11 times or more while the IF condition in "B" is true, a program error (P288) will occur in "B".
When the IF condition in "B" is false, "C" is not executed, so "A" to "C" are not processed repeatedly.

(14) You can call a subprogram (M98, G65, G66, etc.) from the inside of the IF to ENDIF range.
Also, you can execute the IF, THEN, ELSE, and ENDIF commands in a subprogram.
The IF statement can be commanded up to 10 nesting levels even in a subprogram.
(The IF statement can be commanded up to 10 nesting levels for each program.)

(15) The IF statement processing (IF to ENDIF) must be ended in the same program.
If processing is not ended in the same program, a program error (P289) will occur.

(16) The block skip ("/") for the IF/THEN/ELSE/ENDIF command block is valid only when it is assigned to the head of the block. The block skip ("/") assigned to the middle of the IF/THEN/ELSE/ENDIF command block is handled as shown below regardless of the setting of the optional block skip type (parameter "#1226 aux10/bit1").
- When the block skip ("/") is assigned just after the THEN or ELSE command, it is ignored.
- Otherwise, the block skip ("/") is handled as a division command.

<Example> When the block skip ("/") is assigned to the head of the IF statement block, the operation is performed as shown below.

| | |
|---|---|
| / IF[ #100 EQ 0 ] THEN #100 =10 ; | When "Optional block skip" signal is ON, IF statement will not be executed. |

## Repetitions

```
WHILE [conditional expression] DOm ; (m =1, 2, 3 ..... 127) :
:
END m ;
```

While the conditional expression is established, the blocks from the following block to ENDm are repeatedly executed; when it is not established, execution moves to the block following ENDm. DOm may come before WHILE. "WHILE [conditional expression] DOm" and "ENDm" must be used as a pair. If "WHILE [conditional expression]" is omitted, these blocks will be repeatedly ad infinitum. The repeating identification Nos. range from 1 to 127. (DO1, DO2, DO3, .....DO127) Up to 27 nesting levels can be used.

| (1) Same identification No. can be used any number of times. | (2) Any number may be used as the WHILE-DOm identification No. |
|---|---|
| WHILE ~DO1;<br>END1;<br><br>WHILE ~DO1;<br>END1; | WHILE ~DO1;<br>END1;<br>WHILE ~DO3;<br>END3;<br>WHILE ~DO2;<br>END2;<br>WHILE ~DO1;<br>END1; |

(3) Up to 27 nesting levels can be used for WHILE-DOm. Any number from 1 to 127 can be used for "m" as a repeating identification No. regardless of the nesting depth.

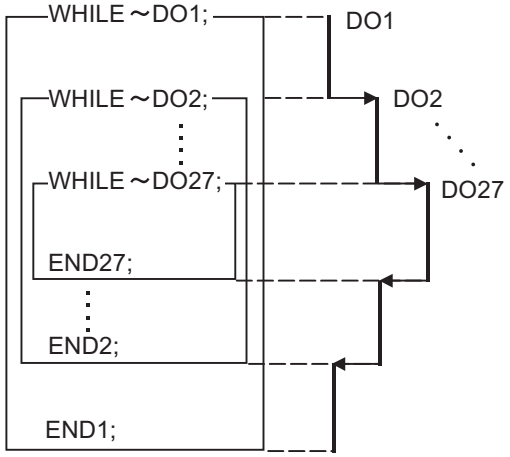


<Note>

♦For nesting, "m" which has been used once cannot be used.

(4) The number of WHILE-DOm nesting levels cannot exceed 27.

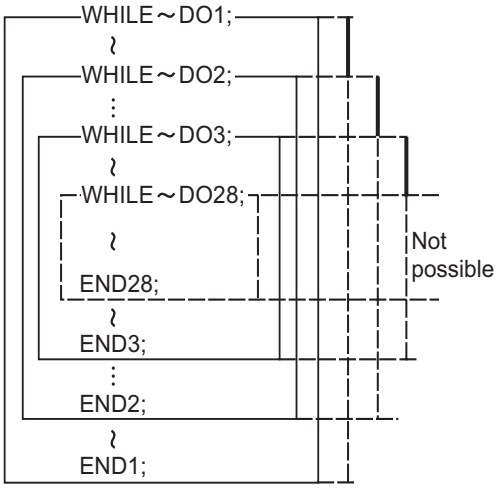


(5) WHILE - DOm must be designated first and ENDm last.

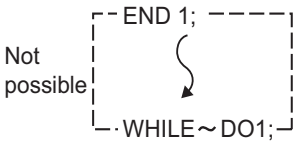


(6) WHILE - DOm and ENDm must correspond on a 1:1 (pairing) basis in a same program.

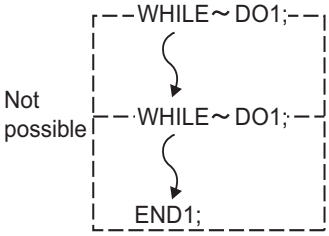


(7) Two WHILE - DOm's must not overlap.

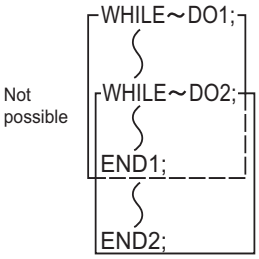


(8) Branching externally out of the WHILE - DOm range, is possible.

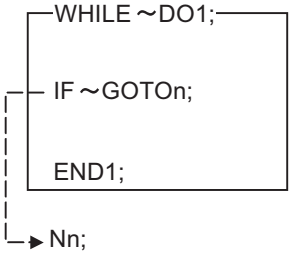


(9) No branching into WHILE - DOm, is possible.

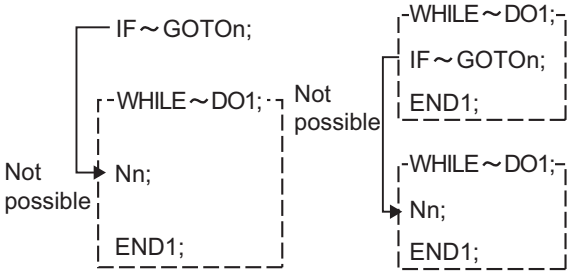


(10) Subprograms can be called by M98, G65 or G66 between WHILE - DOm's.

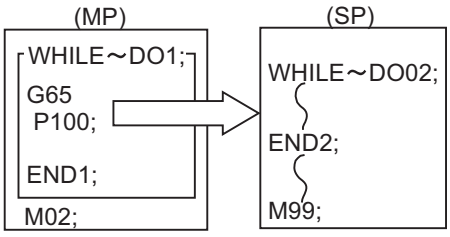

(11) Calls can be initiated by G65 or G66 between WHILE - DOm's and commands can be issued again from 1. Up to 27 nesting levels are possible for the main program and subprograms.

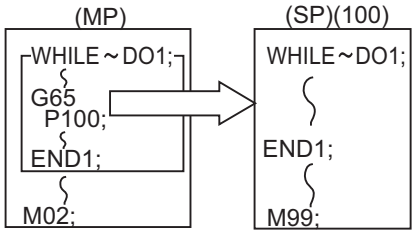


(12) A program error will occur in M99 if WHILE and END are not paired in the subprogram (including macro subprogram).

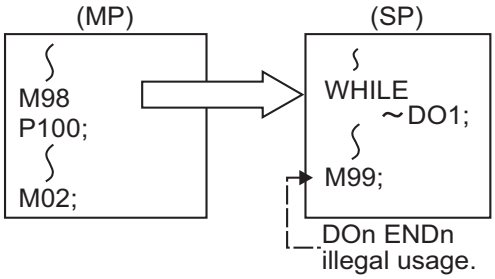


(MP) Main program (SP) Subprogram

## Note

- Even if a fixed cycle containing WHILE is called, the nesting level will be counted up.

## 14.6.3 External Output Commands; POPEN, PCLOS, DPRNT

### Function and purpose

Besides the standard user macro commands, the following macro instructions are also available as external output commands. They are designed to output the variable values or characters to external devices. The data output port can be chosen from RS-232C or memory card.

### Command format

**Open command**

```
POPEN
```

**Closed command**

```
PCLOS
```

**Data output command**

```
DPRNT
```

| | |
|---|---|
| **POPEN** | **For preparing the data outputs** |
| **PCLOS** | **For terminating the data outputs** |
| **DPRNT** | **For character output and digit-by-digit variable numerical output** |

Command sequence

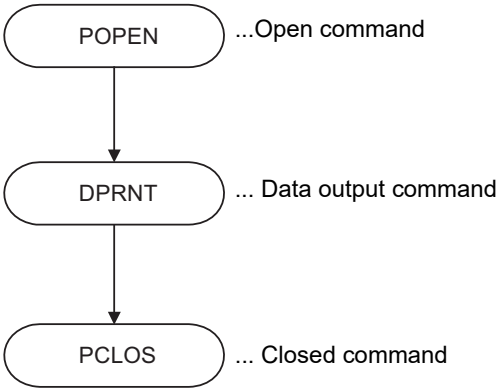

## Detailed description

### Open command : POPEN

(1) The command is issued before the series of data output commands.
(2) The DC2 control code and % code are output from the NC system to the external output device.
(3) Once POPEN; is issued, it will remain valid until PCLOS; is issued.

### Close command : PCLOS

(1) This command is issued when all the data outputs are completed.
(2) The DC4 control code and % code are output from the NC system to the external output device.
(3) This command is used together with the open command and it should not be issued unless the open mode has been established.
(4) Issue the close command at the end of the program even when the operation is suspended by resetting or some other operation during data output.

### Data output command : DPRNT

| **DPRNT [l1#v1 [d1 c1] l2#v2 [d2 c2] ..... ] ;** | | |
|---|---|---|
| l1 | Character string | |
| v1 | Variable No. | |
| d1 | Significant digits above decimal point | c + d <= 8 |
| c1 | Significant digits after decimal point | |

(1) The character output and decimal output of the variable values are done with ISO codes.
(2) The commanded character string is output as it is by the ISO code.
Alphanumerics (A to Z, 0 to 9) and special characters (+, -, *, /) can be used.
Note that asterisk (*) is output as a space code.
(3) The required significant digits above and below the decimal point of the variable values are each commanded within square parentheses. As a result, the commanded number of digits of variable values are output in ISO code in decimal notation from the high-order digits including the decimal point. In this case, trailing zeroes are not omitted.
(4) Leading zeroes are omitted.
The omitted leading zero can be replaced by a space by the setting of a parameter.
This can justify the last digit of the data output to the printer.
(5) Linefeed (LF) code will be output to the end of the output data.
And by setting the parameter "#9112 to #9512 DEV0 - 4 CR OUTPUT" to "1", (CR) code will be written in just before EOB (LF) code.

#### Note

- A data output command can be issued even in two-part system mode. In this case, however, note that the output channel is shared by both part systems. So, be careful not to execute data output by both part systems simultaneously.

### Data output port

(1) The output port can be selected by the parameter "#9007 MACRO PRINT PORT".
(2) When the port is a memory card, the file name of the port can be designated by the parameter "#9054 MACRO PRINT FILE".
(3) When the port is a memory card, the port directory is fixed to root directory.

**Use example:**

**<Parameter setting>**

| | |
|---|---|
| #1127 DPRINT (DPRINT alignment) | = 1 (Align the minimum digit and output) |
| #9007 MACRO PRINT PORT | = 9 (Output to a memory card by an external output command) |
| #9008 MACRO PRINT DEV. | = 0 (Device 0 is selected for an external output command) |
| #9054 MACRO PRINT FILE | = DPRNT_OUT (File name to store output data of an external output command) |
| #9112 DEV0 CR OUTPUT | = 1 (Insert the CR code just before the LF code) |

**<Machining program>**

```
#1=12.34;
#2=#0
#100=-123456789.;
#500=-0.123456789;
POPEN;
DPRNT[]; (*1)
DPRNT[VAL-CHECK];
DPRNT[1234567890];
DPRNT[#1[44]];
DPRNT[#2[44]];
DPRNT[#100[80]];
DPRNT[#500[80]];
DPRNT[#100[08]];
DPRNT[#500[08]];
PCLOS;
M30;
%
```

(*1) Designate a blank line when opening an output file on an edit screen. If not, it will be regarded that no information is provided in the head line of the file on the NC edit screen.

**<Output file (file name = DPRNT_OUT)>**

Blank

Linefeed code

| | | | | | | | | | | | |
|---|---|---|---|---|---|---|---|---|---|---|---|
| (CR) | (LF) | | | | | | | | | | |
| V | A | L | - | C | H | E | C | K | (CR) | (LF) | |
| 1 | 2 | 3 | 4 | 5 | 6 | 7 | 8 | 9 | 0 | (CR) | (LF) |
| | | | 1 | 2 | . | 3 | 4 | 0 | 0 | (CR) | (LF) |
| | | | | 0 | . | 0 | 0 | 0 | 0 | (CR) | (LF) |
| - | 2 | 3 | 4 | 5 | 6 | 7 | 8 | 9 | (CR) | (LF) | |
| | | | | | | | - | 0 | (CR) | (LF) | |
| - | . | 0 | 0 | 0 | 0 | 0 | 0 | 0 | 0 | (CR) | (LF) |
| - | . | 1 | 2 | 3 | 4 | 5 | 6 | 7 | 9 | (CR) | (LF) |

Values above the number of significant figures are rounded down

Values below the number of significant figures are rounded off

### Precautions

(1) An external output command during restart-searching is ignored.
After using the restart-search type 2 to restart-search between a POPEN command and a PCLOS command, execute a POPEN command by such as an MDI interruption before restarting the program.

(2) An external output command during graphic check is ignored.

(3) A program error (P460) will occur if an external output command is issued when the output device is unable to output due to a lack of connection, a low free space etc.

(4) The NC automatically conducts a closing processing when it is reset between a POPEN command and a PCLOS command. So, execute a POPEN command by such as an MDI interruption before executing the rest of the machining program.

(5) If a program error occurs between a POPEN command and a PCLOS command, NC will not automatically conduct a closing processing. So, there is no need to execute a POPEN command by such as an MDI interruption before executing the rest of the machining program.

(6) If a program error occurs to the output port due to the setting of the memory card, execute an NC reset and close the output file before demounting the card.

(7) When the output port is a memory card, the output file may be destroyed if the card is dismounted or the power is turned off without issuing a PCLOS command or NC reset after a POPEN command is issued.

(8) As for M800 series, output data of an external output command can be output to a memory card only when the drive name of the card is "E:" or "F:". Drive name "E" is given the priority. A program error (P460) will occur if the output port executes the external output command of the memory card when the drive name is neither "E:" nor "F:".

(9) When the data is output to a memory card, the maximum number of files that can be created is determined by the FAT16 format.

## 14.6.4 Precautions

**Precautions**

When the user macro commands are employed, it is possible to combine conventional control commands such as movement commands and the M, S, T commands with macro commands such as the arithmetic, decision, branching for creating the machining programs. When the former commands are made into executable statements and the latter commands into macro statements, since macro statement processing is not directly related to machine control, it is an effective means for reducing machining time.
By setting the parameter "#8101 MACRO SINGLE", the macro statements can be processed concurrently with the execution of the executable statement.
(During normal machining, set the parameter OFF to process macro statements in a batch, and during a program check, set the parameter ON to execute the macro statements block by block. Setting can be chosen depending on the purpose.)

By setting the parameter "#1701 cfg01/bit4" to "1", macro statements are processed in a batch to perform a continuous operation regardless of the setting of the parameter "#8101 MACRO SINGLE". (Only for C80 series)

The operation of the macro statement is as shown in the table below.

| #8101 | Operation method | #1701 cfg01/bit4 | Operation |
|---|---|---|---|
| 0 | Continuous operation | 0 | Processes macro statements in batch |
| 0 | Continuous operation | 1 | Processes macro statements in batch |
| 0 | Single operation | 0 | Processes macro statements in batch |
| 0 | Single operation | 1 | Processes macro statements in batch |
| 1 | Continuous operation | 0 | Processes macro statements block by block |
| 1 | Continuous operation | 1 | Processes macro statements in batch |
| 1 | Single operation | 0 | Processes macro statements block by block |
| 1 | Single operation | 1 | Processes macro statements block by block |

There is a signal to notify this macro single setting status to the sequence program. This signal is turned ON when the control parameter "#8101 MACRO SINGLE" is set to "1" (Stop every block during signal block operation). (Only for C80 series)
The operation of the PLC signal depends on the MTB specifications.

Program example

```
N1 G91 G28 X0 Z0 ;          .....(1)
N2 G92 X0 Z0 ;              .....(2)
N3 G00 X-100. Z-100. ;      .....(3)
N4 #101 = 100. * COS[210.] ;  .....(4)     (4), (5) Macro statements
N5 #103 = 100. * SIN[210.] ;  .....(5)
N6 G01 X#101 Z#103 F800 ;   .....(6)
```

Macro statements here refer to the following commands.

(a) Arithmetic commands (block including "=")
(b) Control commands (block including GOTO, DO-END, etc.)
(c) Macro call commands (Includes macro calls and cancel commands based on G codes (G65, G66, G66.1, G67).)

Execution statements refer to statements other than macro statements.

Flow of processing by the program example in the previous page

<Macro single OFF>

N4, N5 and N6 are processed in parallel with the control of the executable statement of N3. If the analysis of N4, N5, and N6 is in time during N3 control, the machine movement is continuously controlled.

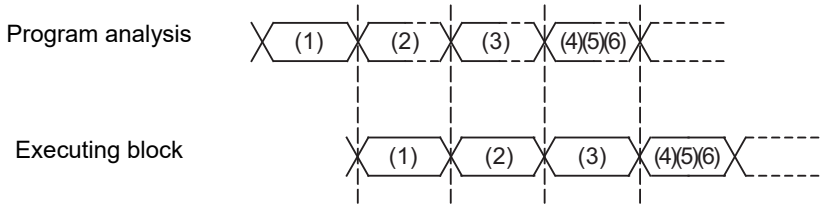


<Macro single ON>

N4 is processed in parallel with the control of the executable statement of N3. After N3 is finished, N5 and N6 are analyzed, and then N6 is executed. Therefore, the machine control is held on standby during the N5 and N6 analysis time.

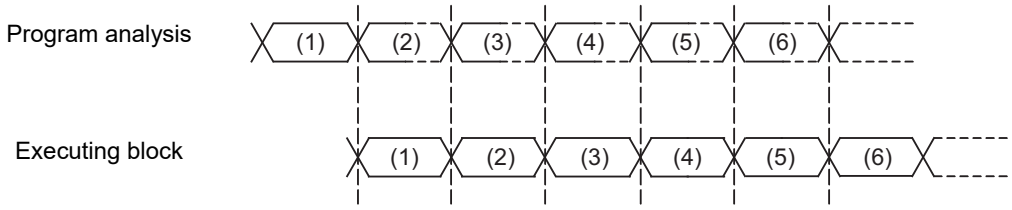

# 14.7 Macro Interruption; M96, M97

## Function and purpose

A user macro interrupt signal (UIT) is input from the machine to interrupt the program currently being executed, and instead calls and executes another program. This is called the user macro interrupt function.
Use of this function allows the program to operate flexibly enough to meet varying conditions.

## Command format

### User macro interruption enable

```
M96 P__ H__ ;
```

```
M96 <File name> H__ ;
```

| | |
|---|---|
| P | Interrupt program No.<br>Use a parameter to read out a 4- or 8-digit interrupt program No. starting with O. |
| <File name> | File name<br>A file name can be specified instead of a program No.<br>In this case, enclose the file name inside brackets < >.<br>(The file name can have up to 32 characters including the extension.) |
| H | Interrupt sequence No. |

### User macro interruption disable

```
M97 ;
```

### Detailed description

(1) The user macro interrupt function is enabled and disabled by the M96 and M97 commands programmed to make the user macro interrupt signal (UIT) valid or invalid. That is, if an interrupt signal (UIT) is input from the machine side in a user macro interruption enable period from when M96 is issued to when M97 is issued or the NC is reset, a user macro interruption is caused to execute the program specified by P__ instead of the one being executed currently.

(2) Another interrupt signal (UIT) is ignored until M96 is commanded while one user macro interrupt is in service. It is also ignored in a user macro interrupt disable state such as after an M97 command is issued or the system is reset.

(3) M96 and M97 are processed internally as user macro interrupt control M codes.

(4) If calling a subprogram numbered with O is enabled, a program number starting with O and specified by P command value is called with a priority.
However, when P command value is less than the digit number set with parameter "#8129 subprogram number selection", increase the digit number of command value by adding leading zeros.
(Example) When parameter "#8129 subprogram number selection"="1", call the subprogram "O0012" with "M96 P12" command.

(5) In the following cases, a subprogram of P command value without O No. is called even with a setting to call a subprogram with O No.

- The digit number of P command value is over the digit number of the program number set with parameter "#8129 subprogram number selection".
- An interrupt program starting with commanded O No. does not exist.

### Enabling conditions

A user macro interruption is enabled only during execution of a program.
The enabling conditions are as follows:

(1) An automatic operation mode or MDI has been selected.

(2) The system is running in automatic mode.

(3) No user macro interruption is being processed.

#### Note

(1) A macro interruption is disabled in manual operation mode (JOG, STEP, HANDLE, etc.)

### Outline of operation

(1) When a user macro interrupt signal (UIT) is input after an M96Pp1 ; command is issued by the current program, interrupt program Op1 is executed. When an M99; command is issued by the interrupt program, control returns to the main program.

(2) If M99 Pp2; is specified, the blocks from the one next to the interrupted block to the last one are searched. If none is found, blocks between the first block of the program and the one before the interrupted block are searched. Control then returns to the block with sequence number Np2 that is found first in the above search.

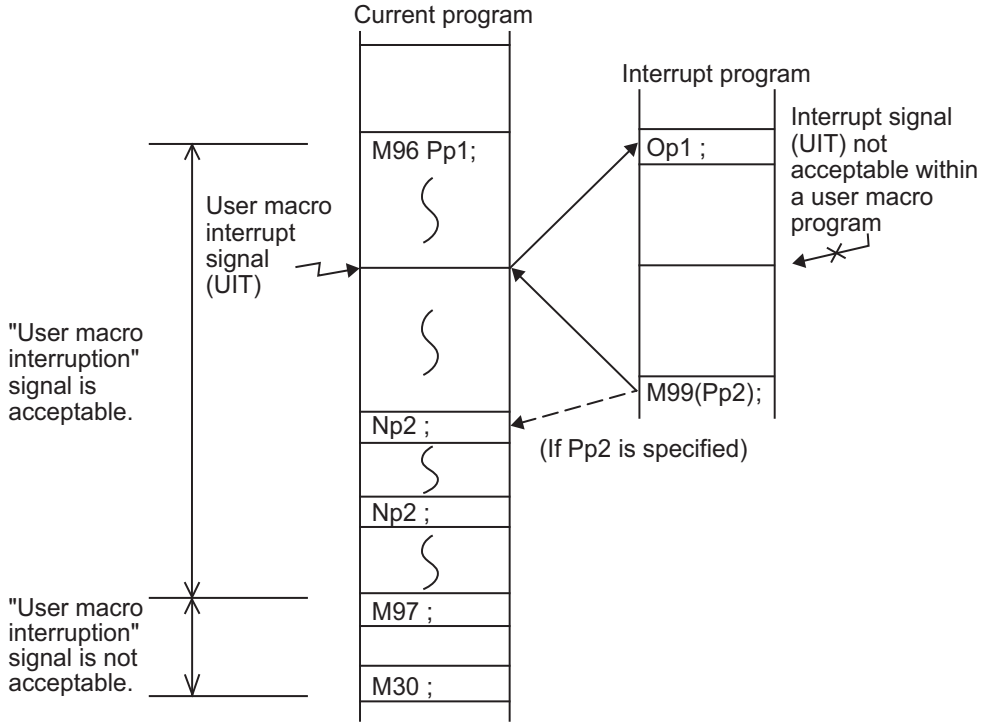

### Interrupt type

Interrupt types 1 and 2 can be selected by the parameter "#1113 INT_2".

**[Type 1]**

(1) When an interrupt signal (UIT) is input, the system immediately stops moving the tool and interrupts dwell, then permits the interrupt program to run.

(2) If the interrupt program contains a move or miscellaneous function (MSTB) command, the commands in the interrupted block are lost. After the interrupt program completes, the main program resumes operation from the block next to the interrupted one.

(3) If the interrupted program contains no move and miscellaneous (MSTB) commands, it resumes operation, after completion of the interrupt program, from the point in the block where the interrupt was caused.

If an interrupt signal (UIT) is input during execution of a miscellaneous function (MSTB) command, the NC system waits for a completion signal (FIN). The system thus executes a move or miscellaneous function command (MSTB) in the interrupt program only after input of FIN.

**[Type 2]**

(1) When an interrupt signal (UIT) is input, the interrupt program is executed after the commands in the block executed at that time have been completed. Even if the interrupt program contains a move or miscellaneous function (MSTB) command, the same processing is performed.

(2) If the interrupt program contains no move and miscellaneous function (MSTB) commands, the interrupt program is executed without interrupting execution of the current block.

However, if the interrupt program has not ended even after the execution of the original block is completed, the system may stop machining temporarily.

[Type 1]

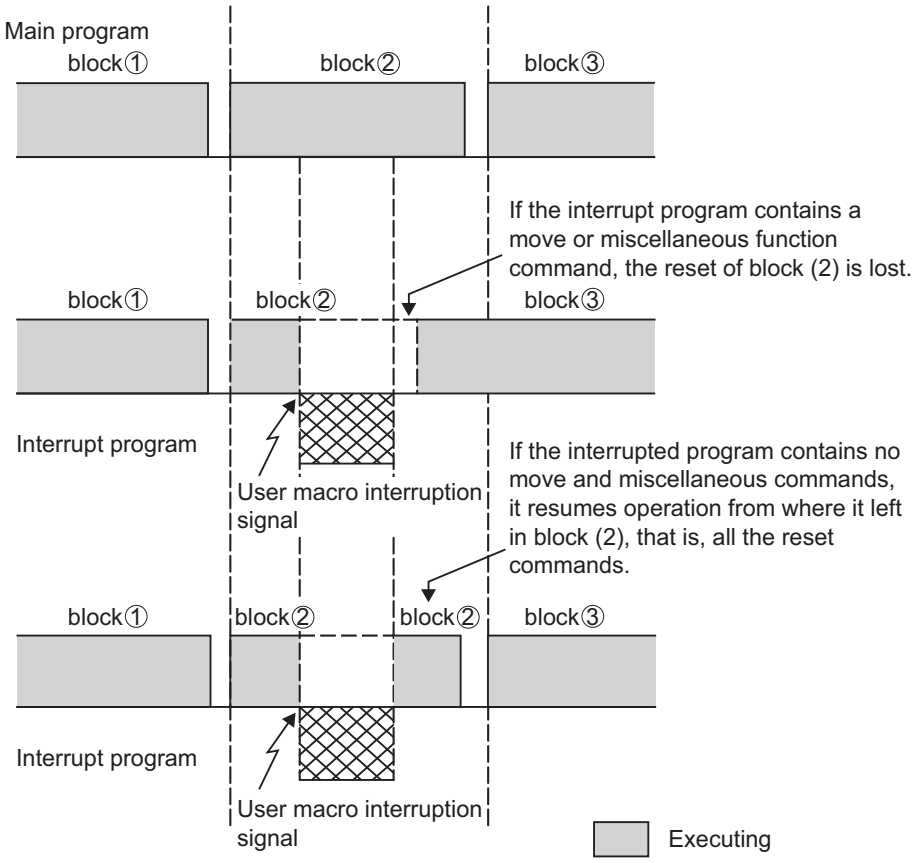
Main program
block①
block②
block③
If the interrupt program contains a move or miscellaneous function command, the reset of block (2) is lost.
block①
block②
block③
Interrupt program
User macro interruption signal
If the interrupted program contains no move and miscellaneous commands, it resumes operation from where it left in block (2), that is, all the reset commands.
block①
block②
block②
block③
Interrupt program
User macro interruption signal
Executing

[Type 2]

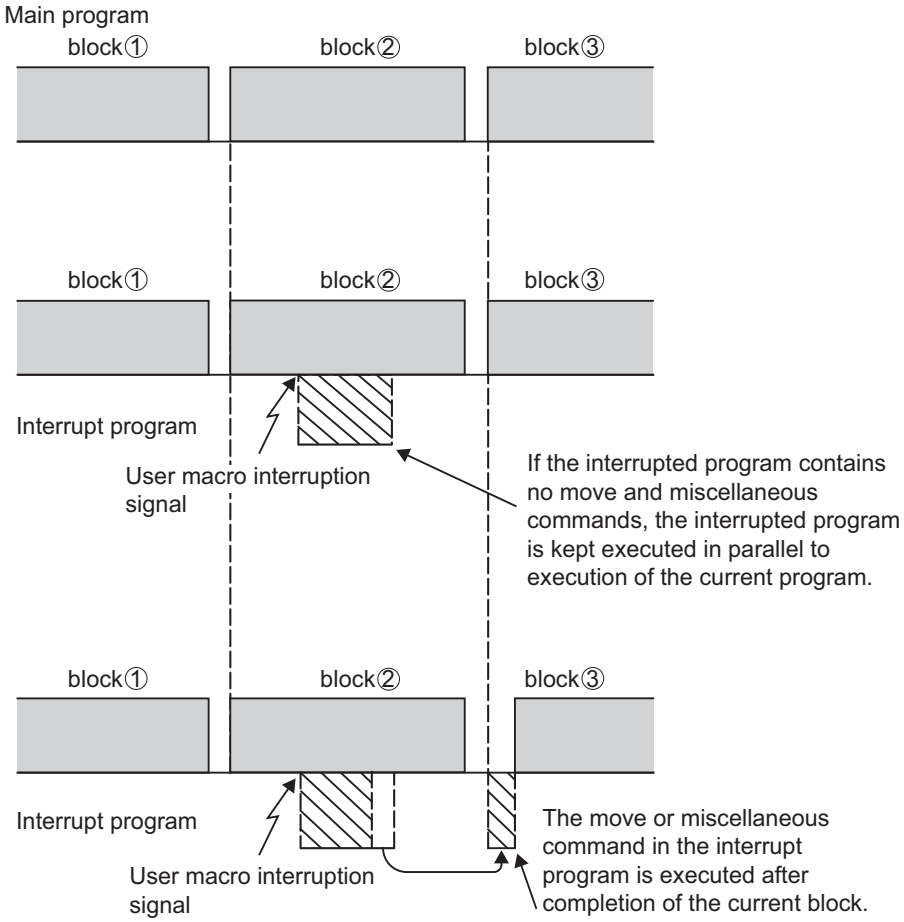
Main program
block①
block②
block③
block①
block②
block③
Interrupt program
User macro interruption signal
If the interrupted program contains no move and miscellaneous commands, the interrupted program is kept executed in parallel to execution of the current program.
block①
block②
block③
Interrupt program
User macro interruption signal
The move or miscellaneous command in the interrupt program is executed after completion of the current block.

### Calling method

User macro interruption is classified into the following two types depending on the way an interrupt program is called. These two types of interrupt are selected by parameter "#8155 Sub-pro interrupt". This setting also involves the MTB settings (parameter "#1229 set01/bit0").
Both types of interrupt are added to the calculation of the nest level. The subprograms and user macros called in the interrupt program are also added to the calculation of the nest level.

| | |
|---|---|
| Subprogram type interrupt | The user macro interruption program is called as a subprogram. As with calling by M98, the local variable level remains unchanged before and after an interrupt. |
| Macro type interruption | The user macro interpretation program is called as a user macro. As with calling by G65, the local variable level changes before and after an interrupt.<br>No arguments in the main program can be passed to the interrupt program. |

### Acceptance of user macro interruption signal (UIT)

A user macro interruption signal (UIT) is accepted in the following two methods. These two methods are selected by a parameter "#1112 S_TRG".

| | |
|---|---|
| Status trigger method | The user macro interruption signal (UIT) is accepted as valid when it is ON.<br>If the interrupt signal (UIT) is ON when the user macro interrupt function is enabled by M96, the interrupt program is activated.<br>By keeping the interrupt signal (UIT) ON, the interrupt program can be executed repeatedly. |
| Edge trigger method | The user macro interrupt signal (UIT) is accepted as valid at its rising edge, that is, at the instance it turns ON.<br>This mode is useful to execute an interrupt program once. |

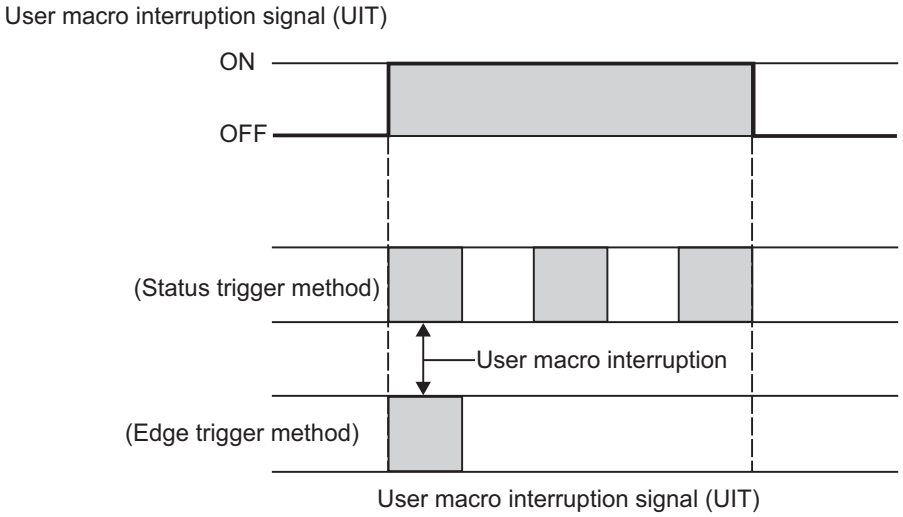


### Returning from user macro interruption

**M99 (P__) ;**

An M99 command is issued in the interrupt program to return to the main program.
Address P is used to specify the sequence number of the return destination in the main program.
The blocks from the one next to the interrupted block to the last one in the main program are first searched for the block with designated sequence No. If it is not found, all the blocks before the interrupted one are then searched.
Control thus returns to the block with sequence No. that is found first in the above search.
(This is equivalent to M99P__ used after M98 calling.)

### Modal information affected by user macro interruption

If modal information is changed by the interrupt program, it is handled as follows after control returns from the interrupt program to the main program.

| | |
|---|---|
| Returning with M99; | The change of modal information by the interrupt program is invalidated and the original modal information is restored.<br>With interrupt type 1, however, if the interrupt program contains a move command, miscellaneous function (MSTB) command, or specific command (*1), the original modal information is not restored. |
| Returning with M99P__ ; | The original modal information is updated by the change in the interrupt program even after returning to the main program. This is the same as in returning with M99P__; from a program called by M98, etc. |

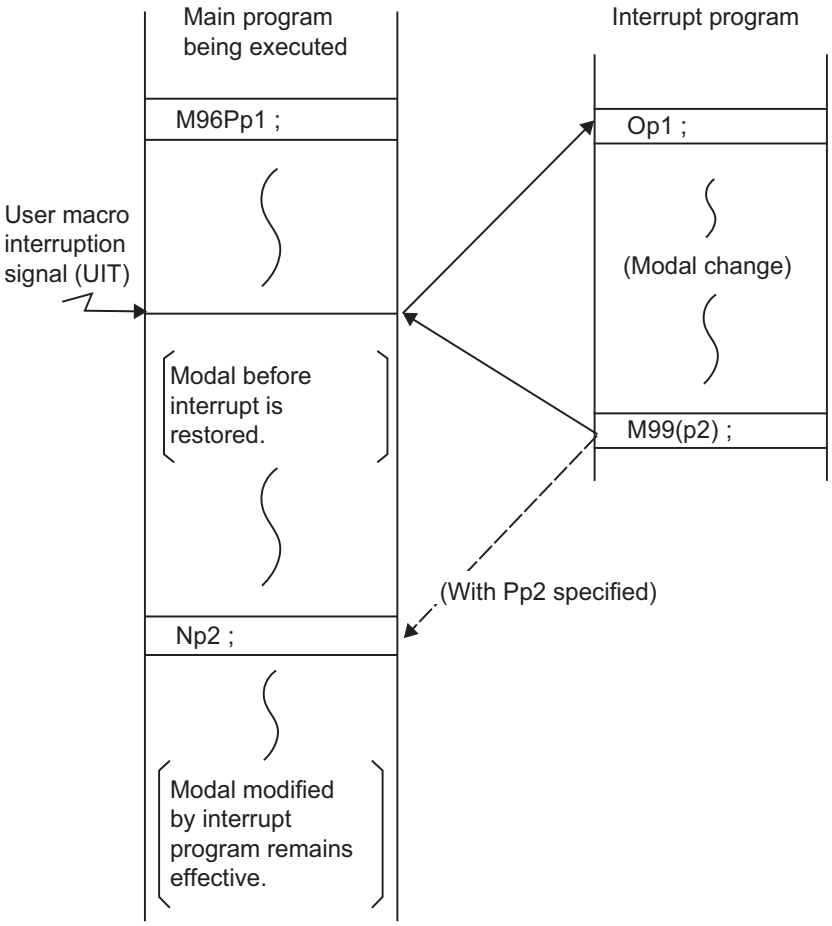


Modal information affected by user macro interruption

(*1) When interrupt type 1 is applied, modal information is not restored for the commands shown below after control has been returned from the interrupt program.

| Command | | Function |
|---|---|---|
| Machining center system | Lathe system | |
| G04 | G04 | Dwell |
| G11 | G11 | Data input by program cancel<br>Tool life management data registration cancel |
| G27 | G27 | Reference position check |
| G92 | G92 | Spindle clamp speed setting |
| G92.1 | G92.1 | Workpiece coordinate system preset |
| - | G110 | Mixed control (cross axis control) I |
| - | G111 | Axis name switch |
| - | G113 | Spindle synchronization I cancel<br>Tool spindle synchronization IA (spindle - spindle synchronization) cancel<br>Tool spindle synchronization II (hobbing) cancel |
| - | G114.1 | Spindle synchronization I |
| - | G114.2 | Tool spindle synchronization IA (Spindle - spindle synchronization) |
| - | G114.3 | Tool spindle synchronization II (Hobbing) |
| G115 | G115 | Start point designation timing synchronization Type 1 |
| G116 | G116 | Start point designation timing synchronization Type 2 |
| G120.1 | G120.1 | Machining condition selection I |
| G121 | G121 | Machining condition selection I cancel |
| - | G125 | Control axis synchronization between part systems |
| - | G126 | Control axis superimposition |
| G127 | G127 | All part system reverse run prohibit command |
| ! | ! | Timing synchronization (! code) |

The lathe-system commands are shown based on the G code system 3.
Hyphen "-" indicates that no specification is provided.

### Modal information variables (#4401 to #4520)

Modal information when control passes to the user macro interruption program can be known by reading system variables #4401 to #4520.
The unit specified with a command applies.

| System variable | Modal information | |
|---|---|---|
| #4401<br>:<br>#4421 | G code (group 01)<br>:<br>G code (group21) | Some groups are not used. |
| #4507 | D code | |
| #4509 | F code | |
| #4511 | H code | |
| #4513 | M code | |
| #4514 | Sequence No. | |
| #4515 | Program No. (*1) | |
| #4519 | S code | |
| #4520 | T code | |

The above system variables are available only in the user macro interrupt program.
If they are used in other programs, program error (P241) will occur.

(*1) Programs are registered as files. When the program No. (file name) is read with #4515, the character string will be converted to a value.
(Example 1)
The file name "123" is the character string 0×31, 0×32, 0×33,
so the value will be (0×31-0×30)*100 + (0×32-0×30)*10 + (0×33-0×30) = 123.0.
Note that if the file name contains characters other than numbers, it will be "blank".
(Example 2)
If the file name is "123ABC", it contains characters other than numbers, so the result will be "blank".

### M code for control of user macro interruption

The user macro interruption is controlled by M96 and M97. However, these commands may have been used for other operations. To be prepared for such cases, these command functions can be assigned to other M codes. (This invalidates program compatibility.)

User macro interrupt control with substitute M codes is possible by setting the substitute M code in parameters "#1110 M96_M" and "#1111 M97_M" and by validating the setting by selecting parameter "#1109 subs_M".

If the parameter "#1109 subs_M" used to enable the substitute M codes is not selected, the M96 and M97 codes remain effective for user macro interrupt control.
In either case, the M codes for user macro interrupt control are processed internally and not output to the outside.

**Parameters**

(1) Subprogram call validity "#8155 Sub-pro interrupt" ("#1229 set01/bit0" (*1))
1: Subprogram type user macro interruption
0: Macro type user macro interruption

(2) Status trigger mode validity "#1112 S_TRG" (*1)
1: Status trigger mode
0: Edge trigger mode

(3) Interrupt type 2 validity "#1113 INT_2" (*1)
1: The executable statements in the interrupt program are executed after completion of execution of the current block. (Type 2)
0: The executable statements in the interrupt program are executed before completion of execution of the current block. (Type 1)

(4) Validity of substitute M code for user macro interruption control "#1109 subs_M" (*1)
1: Valid
0: Invalid

(5) Substitute M codes for user macro interruption control (*1)
Interrupt enable M code (equivalent to M96) "#1110 M96_M"
Interrupt disable M code (equivalent to M97) "#1111 M97_M"
Specify "03" to "97", excluding "30".

(6) Subprogram number selection "#8129 Subpro No. select"
Select a subprogram number to be called preferentially under subprogram control.
0: Commanded program number
1: 4-digits program number beginning with O No.
2: 8-digits program number beginning with O No.

(*1) These parameter settings depend on the MTB specifications.

**Note**

- The program called by the user macro, figure rotation, macro interruption, or compound type fixed cycle also conforms to this setting.

## Precautions

(1) If the user macro interruption program uses system variables #5001 and after (position information) to read coordinates, the coordinates pre-read in the buffer are used.

(2) If an interrupt is caused during execution of the tool nose R compensation or tool radius compensation, a sequence No. (M99P__;) must be specified with a command to return from the user macro interrupt program. If no sequence No. is specified, control cannot return to the main program normally.

(3) With interrupt type 1, when the interrupt program contains a move or MSTB command, do not command the macro interruption to the waiting part system among multiple part systems. Doing so stops machining while the part system that does not perform an interruption remains set in the waiting standby state.
If an interruption is carried out, machining can be started by the "ignore the timing synchronization between part systems" signal; however, the operation of this signal depends on the MTB specifications.

# 15

# Program Support Functions

# 15.1 Corner Chamfering I/Corner Rounding I

### Function and purpose

Chamfering at any angle or corner rounding is performed automatically by adding ",C_" or ",R_" to the end of the block to be commanded first among those command blocks which shape the corner with lines only.
By setting the parameters, "I_", "K_", "C_" can be set for chamfering instead of ",C_", and "R_" can be set for rounding instead of ",R_". (This depends on the MTB specifications.)

## 15.1.1 Corner Chamfering I ; G01 X_ Z_ ,C_/I_/K_/C_

### Function and purpose

This chamfers a corner by connecting the both side of the hypothetical corner which would appear as if chamfering is not performed, by the amount commanded by ",C_" (or "I_","K_","C_").

### Command format

```
N100 G01 X__ Z__ C__ (or I__ / K__ / C__) ;
N200 G01  X__  Z__  ;
```

| | |
|---|---|
| ,C / I / K / C | Length up to chamfering starting point or end point from hypothetical corner |

Corner chamfering is performed at the point where N100 and N200 intersect.

### Detailed description

(1) The start point of the block following the corner chamfering is the hypothetical corner intersection point.

(2) If the parameter "#1272 ext08/bit6" is "0" in the MTB specifications, the ",C" command will be interpreted as a C command if there is no "," (comma).

(3) If there are multiple or duplicate corner chamfering commands in a same block, the last command will be valid.

(4) When both corner chamfering and corner rounding are commanded in the same block, the latter command will be valid.

(5) Tool compensation is calculated for the shape which has already been subjected to corner chamfering.

(6) When the block following a command with corner chamfering does not contain a linear command, a corner chamfering/corner rounding II command will be executed.

(7) Program error (P383) will occur when the movement amount in the corner chamfering block is less than the chamfering amount.

(8) Program error (P384) will occur when the movement amount in the block following the corner chamfering block is less than the chamfering amount.

(9) Program error (P382) will occur when a movement command is not issued in the block following the corner chamfering I command.

(10) If "C" is used as the axis name or the 2nd miscellaneous function, corner chamfering cannot be commanded with "C".

(11) Corner chamfering cannot be commanded with "I" or "K" in a circular command block. "I" and "K" are the circular center commands.

### Program example

| |
|---|
| G01 W100. ,C10. F100 ; |
| U280 W100. ; |

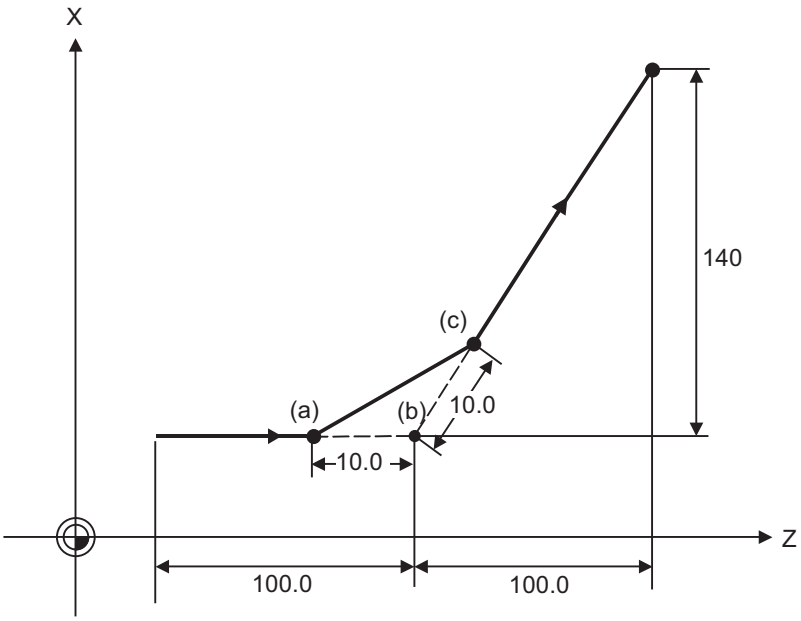


(a) Chamfering start point (b) Hypothetical corner intersection point
(c) Chamfering end point

### Precautions

(1) Corner chamfering and corner rounding can be commanded with "I", "K", "R" only when the 1st block of the corner chamfering/corner rounding command is linear.

(2) Corner chamfering with "I", "K", and corner rounding with "R" can be commanded when the 1st block of the corner chamfering/corner rounding command is linear and the 2nd block is circular. "I", "K" in the 2nd block are the circular center commands.
N100 G01 Xx Zz Ii ; ..... Ii corner chamfering length
N200 G02 Xx Zz Ii Kk ; ..... Ii, Kk circular center command

(3) If ",C_", ",R_" or "I_", "K_", "C_", "R_" are commanded in a same block, ",C_", ",R_" will have the priority.

## 15.1.2 Corner Rounding I ; G01 X_ Z_ ,R_/R_

### Function and purpose

This performs a corner rounding to the both side of the hypothetical corner which would appear as if chamfering is not performed, at the radius of the circular commanded with ",R_" (or "R_").

### Command format

```
N100 G01 X__ Z__ ,R__ (or R__) ;
N200 G01  X__ Z__ ;
```

| | |
|---|---|
| ,R / R | Arc radius of corner rounding |

Corner rounding is performed at the point where N100 and N200 intersect.

### Detailed description

(1) The start point of the block following the corner rounding is the hypothetical corner intersection point.

(2) If the parameter "#1272 ext08/bit6" is "0" in the MTB specifications, the ",R" command will be interpreted as an R command if there is no "," (comma).

(3) When both corner chamfering and corner rounding are commanded in the same block, the latter command will be valid.

(4) Tool compensation is calculated for the shape which has already been subjected to corner rounding.

(5) When the block following a command with corner rounding does not contain a linear command, a corner chamfering/corner rounding II command will be executed.

(6) Program error (P383) will occur when the movement amount in the corner rounding block is less than the R value.

(7) Program error (P384) will occur when the movement amount is less than the R value in the block following the corner rounding.

(8) Program error (P382) will occur if a movement command is not issued in the block following the corner rounding.

(9) Corner rounding cannot be commanded with "R" in a circular command block. "R" is the circular radius command.

## Program example

| |
|---|
| G01 W100. ,R10. F100 ; |
| U280 W100. ; |

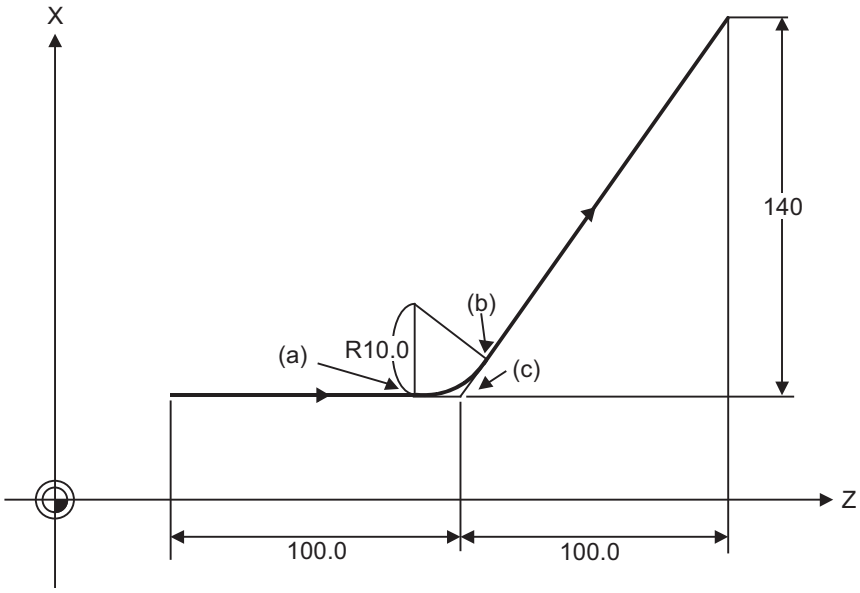


(a) Corner rounding start point
(b) Corner rounding end point
(c) Hypothetical corner intersection point

## Precautions

(1) Corner chamfering and corner rounding can be commanded with "I", "K", "R" only when the 1st block of the corner chamfering/corner rounding command is linear.

(2) Corner chamfering with "I", "K", and corner rounding with "R" can be commanded when the 1st block of the corner chamfering/corner rounding command is linear and the 2nd block is circular. "I", "K" in the 2nd block are the circular center commands.
N100 G01 Xx Zz Ii ; ..... Ii corner chamfering length
N200 G02 Xx Zz Ii Kk ; ..... Ii, Kk circular center command

(3) If ",C_", ",R_" or "I_", "K_", "C_", "R_" are commanded in a same block, ",C_", ",R_" will have the priority.

## 15.1.3 Corner Chamfering Expansion/Corner Rounding Expansion

### Function and purpose

Using an E command, the feedrate can be designated for the corner chamfering and corner rounding section. In this way, the corner section can be cut into a correct shape.

Example

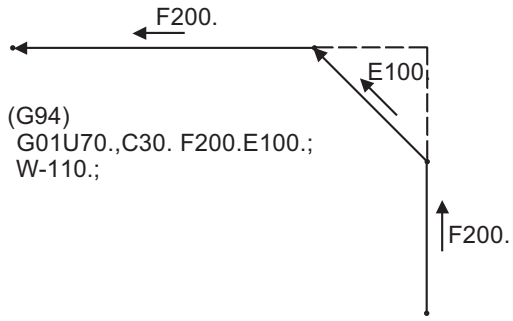


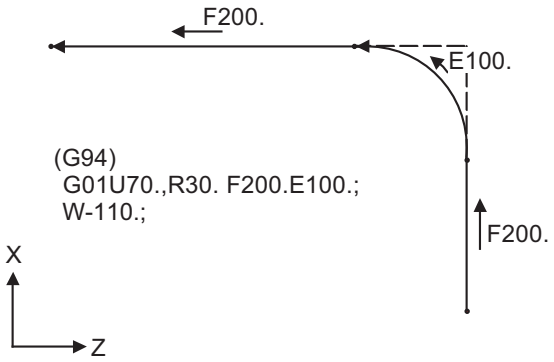

## Detailed description

(1) The E command is modal. It is also valid for the feed in the next corner chamfering/corner rounding section.

Example

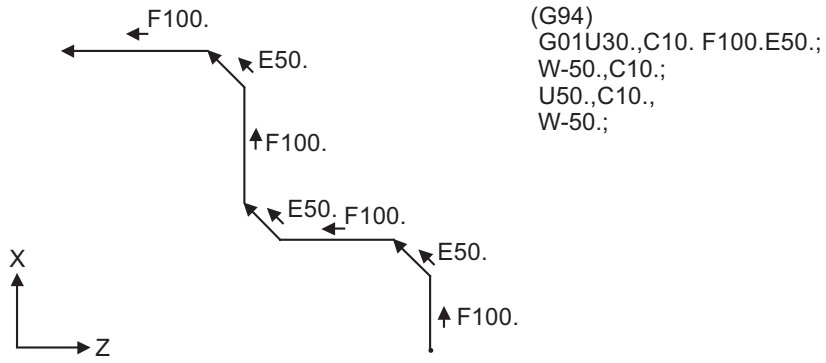


(2) E command modal has separate asynchronous feedrate modal and synchronous feedrate modal functions. Which one is validated depends on the asynchronous/synchronous mode (G94/G95).

(3) When the E command is 0, or when there has not been an E command up to now, the corner chamfering/corner rounding section feedrate will be the same as the F command feedrate.

Example

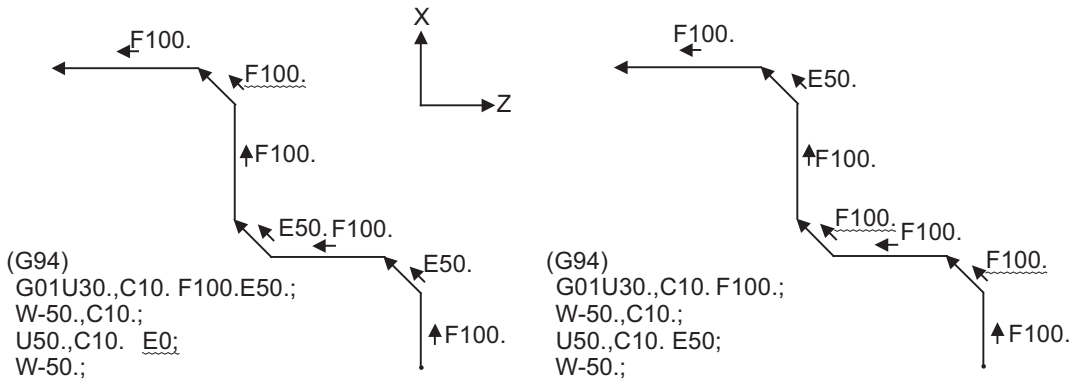


(4) E command modal is not cleared even if the reset button is pressed.
It is cleared when the power is turned OFF. (In the same manner as F commands.)

(5) All E commands except those shown below are at the corner chamfering/corner rounding section feedrate.
- E commands during thread cutting modal
- E commands during thread cutting cycle modal

## 15.1.4 Interrupt during Corner Chamfering/Interrupt during Corner Rounding

### Detailed description

(1) Shown below are the operations of manual interruption during corner chamfering or corner rounding.

With an absolute command and manual absolute switch ON.

```
N1 G28 XZ;
N2 G00 X40. Z120.;
N3 G03 X140.Z70. K-50. ,R20. F100 ;
N4 G01 X40. Z20. ;
   :
```

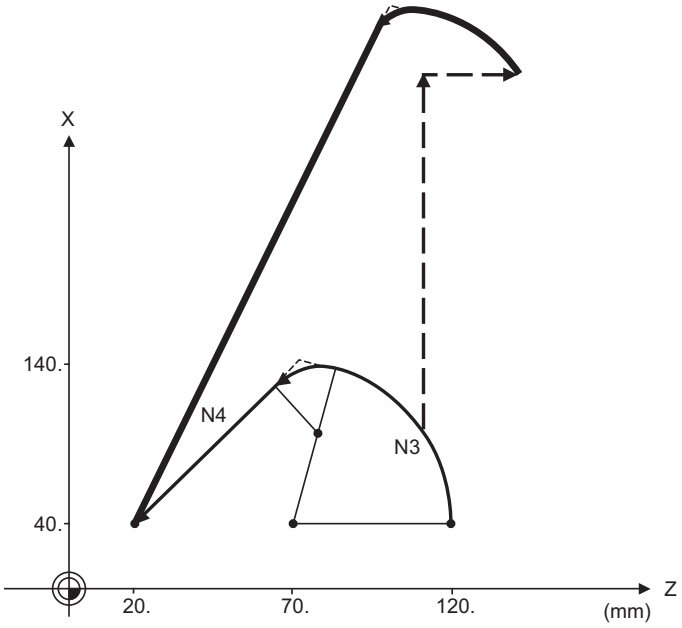


With an incremental command and manual absolute switch OFF

```
N1 G28 XZ;
N2 G00 U40. W120.;
N3 G03 U100. W-50. K-50. ,R20. F100 ;
N4 G01 U-100.W-50. ;
   :
```

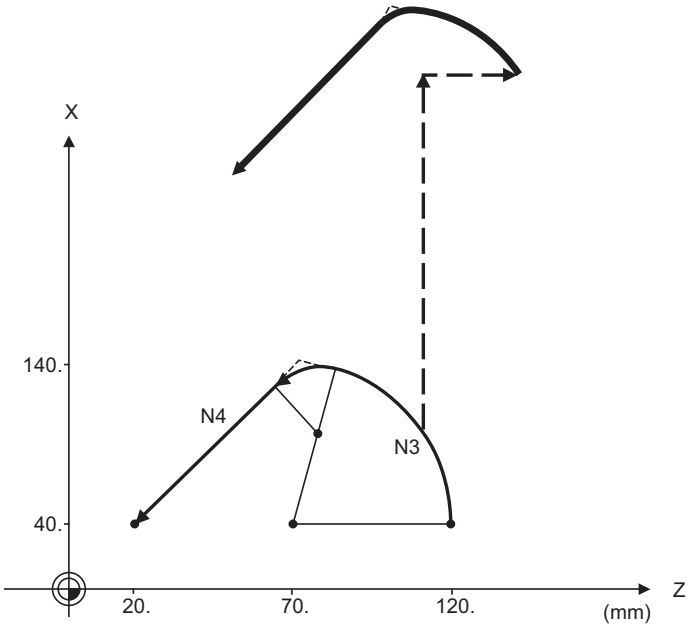


Interrupt amount

Path in interrupt case

Path in non-interrupt case

(2) With a single block during corner chamfering or corner rounding, the tool stops after these operations areexe-cuted.

# 15.2 Corner Chamfering II/Corner Rounding II

### Function and purpose

Corner chamfering and corner rounding can be performed by adding ",C" or ",R" to the end of the block which is commanded first among the block that forms a corner with continuous arbitrary angle lines or arcs.
By setting the parameters, "I_", "K_", "C_" can be set for chamfering instead of ",C_", and "R_" can be set for rounding instead of ",R_". Corner chamfering and corner rounding can both be commanded with an absolute position or incremental position.

## 15.2.1 Corner Chamfering II ; G01/G02/G03 X_ Z_ ,C_/I_/K_/C_

### Function and purpose

The corner is chamfered by commanding ",C" (or "I_", "K_", "C_") in the 1st block of the two continuous blocks containing an arc. For an arc, this will be the chord length.

### Command format

```
N100 G03 X__  Z__  I__  K__  ,C__ (or C__) ;
N200 G01  X__  Z__  ;
```

| | |
|---|---|
| ,C / C | Length up to chamfering starting point or end point from hypothetical corner |

Corner chamfering is performed at the point where N100 and N200 intersect.

### Detailed description

(1) If this function is commanded while the corner chamfer or corner rounding command is not defined in the specifications, it causes a program error (P381).
(2) The start point of the block following the corner chamfering is the hypothetical corner intersection point.
(3) If the parameter "#1272 ext08/bit6" is "0" in the MTB specifications, the ",C" command will be interpreted as a C command if there is no "," (comma).
(4) If there are multiple or duplicate corner chamfering commands in a same block, the last command will be valid.
(5) When both corner chamfering and corner rounding are commanded in the same block, the latter command will be valid.
(6) Tool compensation is calculated for the shape which has already been subjected to corner chamfering.
(7) Program error (P385) will occur when positioning or thread cutting is commanded in the corner chamfering command block or in the next block.
(8) Program error (P382) will occur when the block following corner chamfering contains a G command other than group 01 or another command.
(9) Program error (P383) will occur when the movement amount commanded in the corner chamfering block is less than the chamfering amount.
(10) Program error (P384) will occur when the movement amount is less than the chamfering amount in the block following the block commanding corner chamfering.
(11) Even if a diameter is commanded, it will be handled as a radius command value during corner chamfering.
(12) Program error (P382) will occur when a movement command is not issued in the block following the corner chamfering II command.

(13) If "C" is used as the axis name or the 2nd miscellaneous function, corner chamfering cannot be commanded with "C".

(14) Corner chamfering cannot be commanded with "I" or "K" in a circular command block. "I" and "K" are the circular center commands.

### Program example

(1) Linear - arc

Absolute command

```
N1 G28 X Z ;
N2 G00 X50. Z100. ;
N3 G01 X150. Z50. ,C20. F100 ;
N4 G02 X50. Z0 I0 K-50. ;
      :
```

Incremental command

```
N1 G28 X Z ;
N2 G00 U25. W100. ;
N3 G01 U50. W-50. ,C20. F100 ;
N4 G02 U-50. W-50. I0 K-50. ;
      :
```

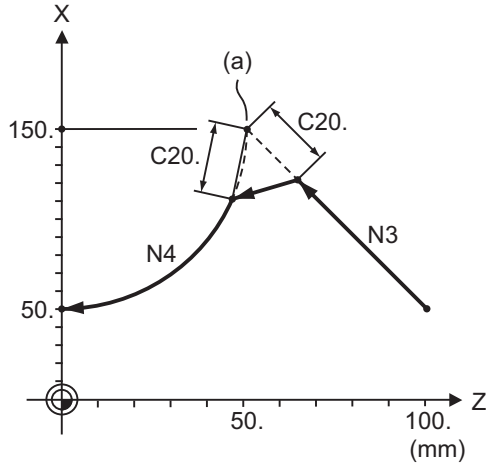


(a) Hypothetical corner intersection point

(2) Arc - arc

Absolute command

```
N1 G28 X Z ;
N2 G00 X20. Z140. ;
N3 G02 X100. Z60. I100. K0. ,C20. F100 ;
N4 X60. Z0 I80. K-60. ;
      :
```

Incremental command

```
N1 G28 X Z ;
N2 G00 U10. W140. ;
N3 G02 U40. W-80. R100. ,C20. F100 ;
N4 U-20. W-60. I80. K-60. ;
      :
```

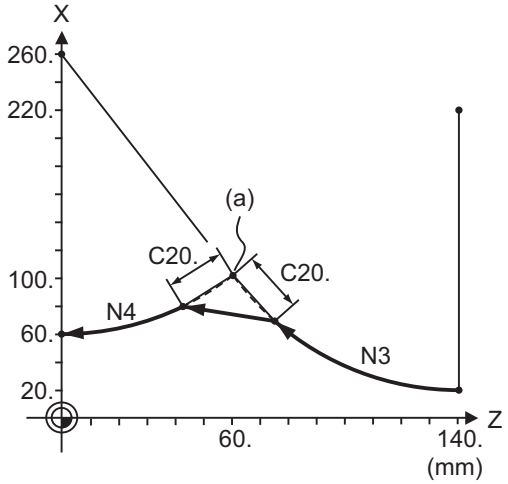


(a) Hypothetical corner intersection point

### Precautions

(1) Corner chamfering and corner rounding can be commanded with "I", "K", "R" only when the 1st block of the corner chamfering/corner rounding command is linear.

(2) Corner chamfering with "I", "K", and corner rounding with "R" can be commanded when the 1st block of the corner chamfering/corner rounding command is linear and the 2nd block is circular. "I", "K" in the 2nd block are the circular center commands.

N100 G01 X__ Z__ I__ ; ..... I corner chamfering length

N200 G02 X__ Z__ I__ K__ ; ..... I,K circular center command

(3) If ",C_", ",R_" or "I_", "K_", "C_", "R_" are commanded in a same block, ",C_", ",R_" will have the priority.

## 15.2.2 Corner Rounding II ; G01/G02/G03 X_ Z_ ,R_/R_

### Function and purpose

The corner is rounded by commanding ",R_" (or "R_") in the 1st block of the two continuous blocks containing an arc.

### Command format

```
N100 G03  X__  Z__  I__  K__  ,R__ (or R__) ;
N200 G01  X__  Z__  ;
```

| | |
|---|---|
| ,R / R | Arc radius of corner rounding |

Corner rounding is performed at the point where N100 and N200 intersect.

### Detailed description

(1) If this function is commanded while the corner chamfer or corner rounding command is not defined in the specifications, it causes a program error (P381).

(2) The start point of the block following the corner rounding is the hypothetical corner intersection point.

(3) If the parameter "#1272 ext08/bit6" is "0" in the MTB specifications, the ",R" command will be interpreted as an R command if there is no "," (comma).

(4) When both corner chamfering and corner rounding are commanded in a same block, the latter command will be valid.

(5) Tool compensation is calculated for the shape which has already been subjected to corner rounding.

(6) Program error (P385) will occur when positioning or thread cutting is commanded in the corner rounding command block or in the next block.

(7) Program error (P382) will occur when the block following corner rounding contains a G command other than group 01 or another command.

(8) Program error (P383) will occur when the movement amount in the corner rounding block is less than the R value.

(9) Program error (P384) will occur when the movement amount is less than the R value in the block following the corner rounding.

(10) Even if a diameter is commanded, it will be handled as a radius command value during corner rounding.

(11) A program error (P382) will occur if a movement command is not issued in the block following corner rounding.

(12) Corner rounding cannot be commanded with "R" in a circular command block. "R" is the circular radius command.

## Program example

(1) Linear - arc

Absolute command

```
N1 G28 X Z ;
N2 G00 X60.  Z100. ;
N3 G01 X160. Z50. ,R10. F100 ;
N4 G02 X60.  Z0 I0 K-50. ;
      :
```

Incremental command

```
N1 G28 X Z ;
N2 G00 U30. W100. ;
N3 G01 U50. W-50. ,R10. F100 ;
N4 G02 U-50. W-50. I0 K-50. ;
      :
```

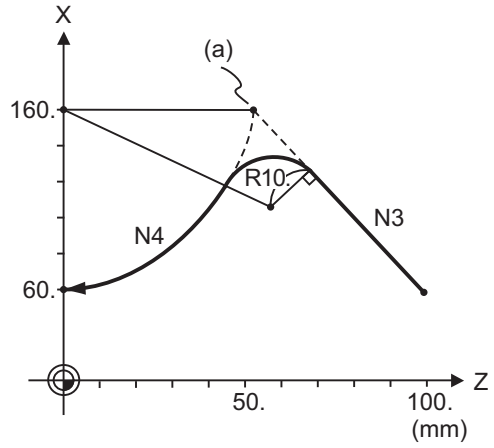


(a) Hypothetical corner intersection point

(2) Arc - arc

Absolute command

```
N1 G28 X Z ;
N2 G00 X60. Z100. ;
N3 G02 X160. Z50. R60 ,R10. F100 ;
N4 X60. Z0  R50. ;
      :
```

Incremental command

```
N1 G28 X Z ;
N2 G00 U30. W100. ;
N3 G02 U50. W-50. I50. K0 ,R10. F100 ;
N4 U-50. W-50. I0. K-50. ;
      :
```

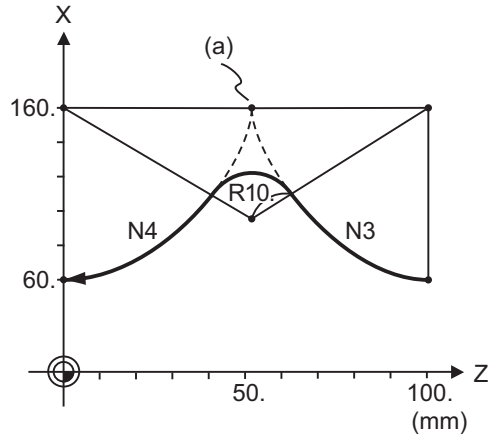


(a) Hypothetical corner intersection point

## Precautions

(1) Corner chamfering and corner rounding can be commanded with "I", "K", "R" only when the 1st block of the corner chamfering/corner rounding command is linear.

(2) Corner chamfering with "I", "K", and corner rounding with "R" can be commanded when the 1st block of the corner chamfering/corner rounding command is linear and the 2nd block is circular. "I", "K" in the 2nd block are the circular center commands.

N100 G01 X__ Z__ I__ ; ..... I corner chamfering length

N200 G02 X__ Z__ I__ K__ ; ..... I,K circular center command

(3) If ",C_", ",R_" or "I_", "K_", "C_", "R_" are commanded in a same block, ",C_", ",R_" will have the priority.

### 15.2.3 Corner Chamfering Expansion/Corner Rounding Expansion

For details, refer to "Corner Chamfering I / Corner Rounding" and "Corner Chamfering Expansion / Corner Rounding Expansion".

### 15.2.4 Interrupt during Corner Chamfering/Interrupt during Corner Rounding

For details, refer to "Corner Chamfering I / Corner Rounding" and "Interrupt during Corner Chamfering Interrupt during / Corner Rounding".

# 15.3 Linear Angle Command ; G01 X_/Z_ A_/,A_

## Function and purpose

The end point coordinates are automatically calculated by commanding the linear angle and one of the end point coordinate axes.

## Command format

```
N1 G01 Xx1(Zz1) Aa1;
N2 G01 Xx2(Zz2) A-a2; (A-a2 can also be set as Aa 3. )
```

```
N1 G01 Xx1(Zz1) ,Aa1;
N2 G01 Xx2(Zz2) ,A-a2;
```

This designates the angle and the X or Z axis coordinates.
Select the command plane with G17 to G19.

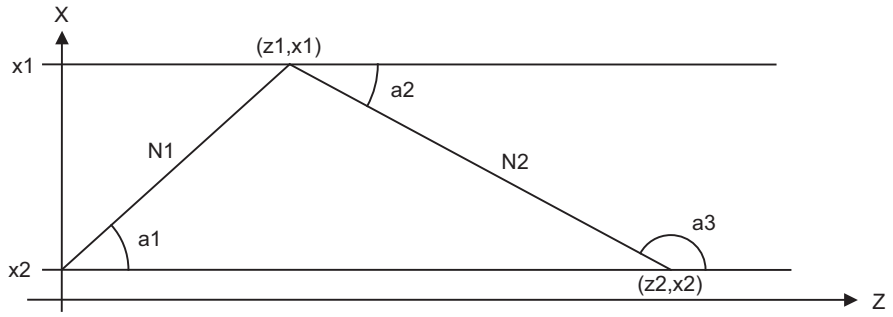


## Detailed description

(1) As seen from the + direction of the horizontal axis of the selected plane, the counterclockwise (CCW) direction is considered to be + and the clockwise direction (CW) -.

(2) Either of the axes on the selected plane is commanded for the end point.

(3) The angle is ignored when the angle and the coordinates of both axes are commanded.

(4) When only the angle has been commanded, this is treated as a geometric command.

(5) The angle of either the start point (a1) or end point (a2) may be used.

(6) This function is valid only for the G01 command; it is not valid for other interpolation or positioning commands.

(7) The range of slope "a" is between -360.000 and 360.000.
When a value outside this range is commanded, it will be divided by 360 (degrees) and the remainder will be commanded.
(Example) If 400 is commanded, 40° (remainder of 400/360) will become the command angle.

(8) If an address A is used for the axis name or the 2nd miscellaneous function, use ",A" as the angle.

(9) If "A" and ",A" are commanded in a same block, ",A" will be interpreted as the angle.

# 15.4 Geometric I; G01 A_

## Function and purpose

When it is difficult to calculate the intersection point of two straight lines of consecutive linear interpolation commands, the end point of the first straight line will be automatically calculated inside the NC and the movement command will be controlled, provided that the gradient of the first straight line as well as the end point coordinates and gradient of the second straight line are commanded.

### Note

(1) If the parameter "#1082 Geomet" is set to "0", geometric I will not function.

## Command format

```
N1 G01 Aa1 (A-a2) Ff1;
N2 Xx2 Zz2 Aa4 (A-a3) Ff2;
```

| | |
|---|---|
| Aa1, A-a2, A-a3, Aa4 | Angle |
| Ff1, Ff2 | Speed |
| Xx2, Zz2 | End point coordinates of the next block |

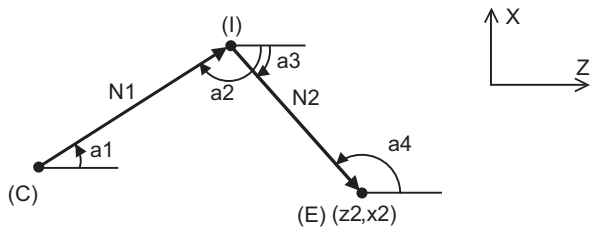


(C) Current position
(E) End point coordinates
(I) Intersection point (calculated automatically)

## Detailed description

(1) The gradient indicates the angle to the positive (+) direction of the horizontal axis for the selected plane. The counterclockwise (CCW) direction is indicated by a positive sign (+), and the clockwise (CW) direction by a negative sign (-).

(2) The range of gradient "a" is between -360.000 and 360.000.
When a value outside this range is commanded, it will be divided by 360 (degrees) and the remainder will be commanded.

(Example) If 400 is commanded, 40° (remainder of 400/360) will become the command angle.

(3) The gradient of the line can be commanded on either the start or end point side. Whether designated gradient is the starting point or the end point will be automatically identified in NC.

(4) When the angle where the two straight lines intersect is less than 1°, program error (P392) occurs.

(5) The end point coordinates of the second block should be commanded with absolute position. If incremental command is used, program error (P393) occurs.

(6) The feedrate can be commanded for each block.

(7) Instead of G01, thread cutting (G33) or variable lead thread cutting (G34) can be specified as a linear path command.
Only G02/G03 commands can be specified as arc path commands.
If another G code is programmed in the second block, the program error (P394) is issued.

(8) Axes cannot be specified in the first block. If an axis is specified, the command is not treated as a geometric command, but a normal linear/arc path command.

(9) If address "A" is used for an axis name or a second miscellaneous function, geometric I cannot be used.
The commands are treated as normal linear path commands, not geometric commands.

## Relationship with other functions

A description is provided using the following examples.

(C) Current position
(E) End point coordinates
(I) Intersection point (calculated automatically)

(1) Corner chamfering and corner rounding can be commanded after the angle command in the 1st block.

| | |
|---|---|
| (Example 1)<br>N1 Aa1 ,Cc1 ;<br>N2 Xx2 Zz2 Aa2 ; | 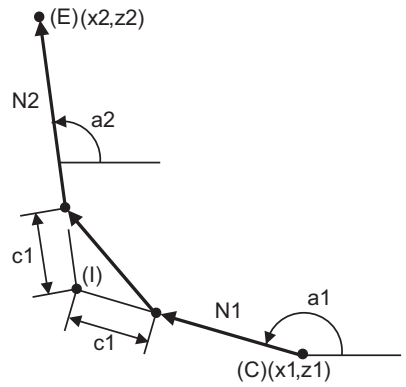 |
| (Example 2)<br>N1 Aa1 ,Rr1 ;<br>N2 Xx2 Zz2 Aa2 ; | 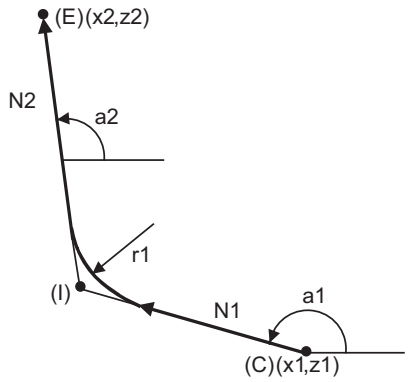 |

(2) The geometric command I can be issued after the corner chamfering or corner rounding command.

| | |
|---|---|
| (Example 3)<br>N1 Xx2 Zz2 ,Cc1 ;<br>N2 Aa1 ;<br>N3 Xx3 Zz3 Aa2 ; | 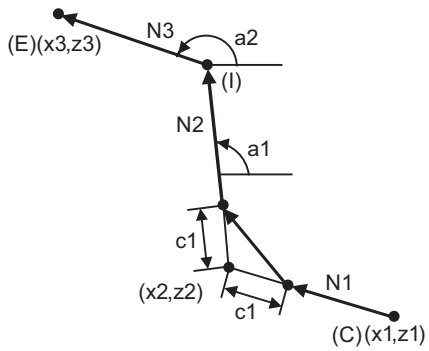 |

(3) The geometric command I can be issued after the linear angle command.

| | |
|---|---|
| (Example 4)<br>N1 Xx2 Aa1 ;<br>N2 Aa2 ;<br>N3 Xx3 Zz3 Aa3 ; | 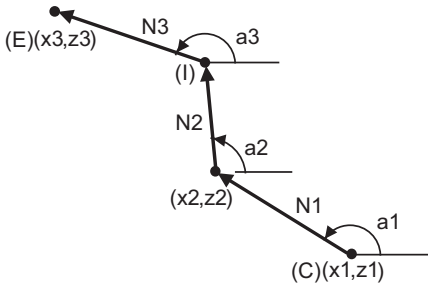 |

# 15.5 Geometric IB

## Function and purpose

Geometric IB is used to obtain the contact point or the intersection point for two travel commands in consecutive blocks when at least one of the commands is a circular path command. The center point of the circular arc or the slope angle of the straight line is required instead of the end point of the first block.

### Note

(1) If the parameter "#1082 Geomet" is not set to "2", geometric IB will not function.

(2) Instead of G01, thread cutting (G33) or variable lead thread cutting (G34) can be specified as a linear path command. Only G02/G03 commands can be specified as circular path commands.
If another G code is programmed in the second block, the program error (P394) occurs.

(3) Axes cannot be specified in the first block. If an axis is specified, the command is not treated as a geometric command, but a normal linear/circular path command.

(4) If address "A" is used for an axis name or a second miscellaneous function, a linear path command cannot be used. In such cases, the commands are treated as normal linear/circular path commands, and the intersection point of straight line and circular arc or the contact point between straight line and circular arc are not automatically calculated.

**Contact point of two contacting arcs (Refer to 15.5.1.)**

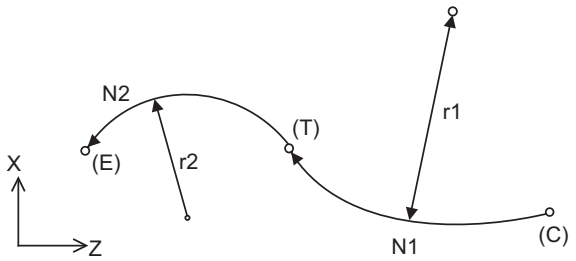


The following diagrams are described using the following examples.

(C) Current position

(E) End point

(I) Intersection point (calculated automatically)

(T) Contact point (calculated automatically)

**Intersection point between linear and arc (or, arc and linear) (Refer to 15.5.2.)**

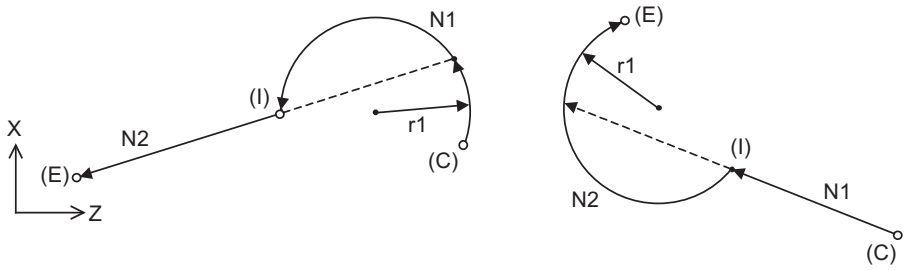


**Contact point between linear and arc (or, arc and linear) (Refer to 15.5.3.)**

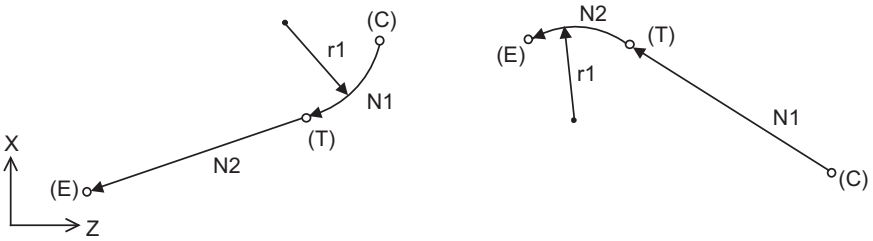

## 15.5.1 Geometric IB (Automatic Calculation of Contact Point of Two Circular Arcs); G02/G03 P_Q_ /R_

### Function and purpose

When the contact point of two consecutive contacting circular arcs is not indicated in the drawing, it can be automatically calculated using any one of the following commands.

- Command the center coordinate position of the 1st arc as well as the end point (absolute position) and center coordinate position of the 2nd arc.
- Command the center coordinate position of the 1st arc and the radius of the 2nd arc.
- Command the radius of the 1st arc as well as the end point (absolute position) and center coordinate position of the 2nd arc.

### Command format

```
N1 G02(G03) Ii1 Kk1 Ff1;
N2 G03(G02) Xx2 Zz2 Ii2 Kk2 Ff2;
```

```
N1 G02(G03) Ii1 Kk1 Ff1;
N2 G03(G02) Xx2 Zz2 Rr2 Ff2;
```

```
N1 G02(G03) Rr1 Ff1;
N2 G03(G02) Xx2 Zz2 Ii2 Kk2 Ff2;
```

| | |
|---|---|
| I, K (*1) | Circle center coordinates (incremental position) (diameter/radius value command) in X and Z axes<br>1st block arc : Radius command incremental amount from the start point to the center<br>2nd block arc : Radius command incremental amount from the end point to the center |
| R | Arc radius (when a (-) sign is attached, the arc is judged to be 180° or more) |

(*1) This command can be issued using P and Q (X and Z axes circle center coordinates (absolute position)) instead of I and K.

The circle center point for Y axis of G17 or G19 plane is specified with J (incremental position) or A (absolute position).

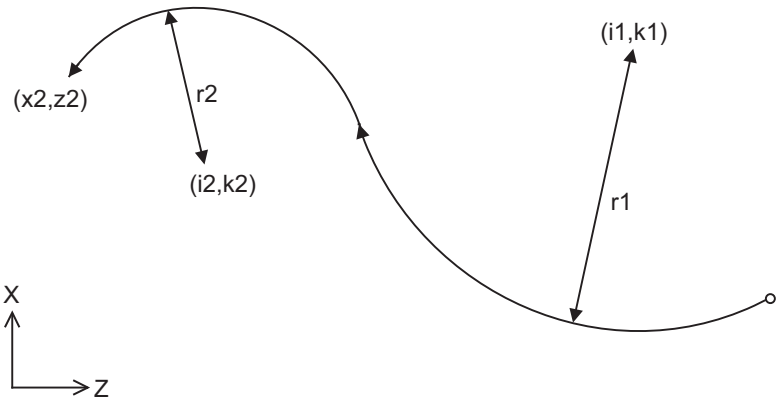

## Detailed description

(1) The end point coordinates of the 2nd block should be commanded with the absolute position. A program error (P393) occurs before the 1st block if commanded with the incremental position.

(2) A program error (P390) occurs before the 1st block if there is no geometric IB specification.

(3) In case of the 2nd block arc, a program error (P395) occurs before the 1st block if the R command (*1) or I/K (P/Q) command is not issued.

(*1) In this case, the 1st block must be set with the I or K (P or Q) command.

(4) A program error (P397) occurs before the 1st block if two arcs that do not contact are commanded.

(5) The accuracy to calculate the contact point is ±1 μm (fractions rounded up).

(6) The error range at calculating the contact point is set in parameter "#1084 RadErr".

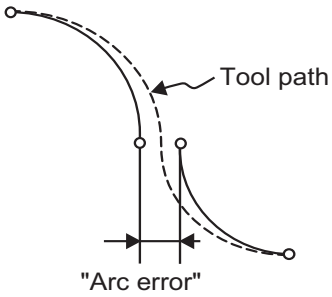


(7) When I or K is omitted, the values are regarded as "I0" and "K0". P and Q cannot be omitted.

(8) If the start point and the end point of an arc block is identical, the R-designated arc command finishes immediately. To command a true circle, use the IK (PQ)-designated arc command.

(9) When the 2nd block arc inscribes the 1st block arc and the 2nd block is an R-designated arc, the path by the arc command depends on the R sign. When the R sign is positive, the path is set the inward turning arc command (refer to the path of "R+" in the figure). When the R sign is negative, the path is set to the outward turning arc command (refer to the path of "R-" in the figure).

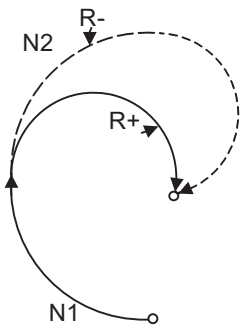


(10) When the arc center of the 2nd block for geometric IB is commanded with IJK and the pitch is designated with address "P" or ",P", the helical interpolation is carried out for the arc of the 2nd block after geometric IB has been completed. Refer to "6.7 Helical Interpolation; G02, G03" for details.

(11) Single block operation stops at the 1st block.

(12) G codes of the G modal group 1 in the 1st/2nd block can be omitted.

### Program example

(1) **IK and IK commands**

(T) Contact point (calculated automatically)

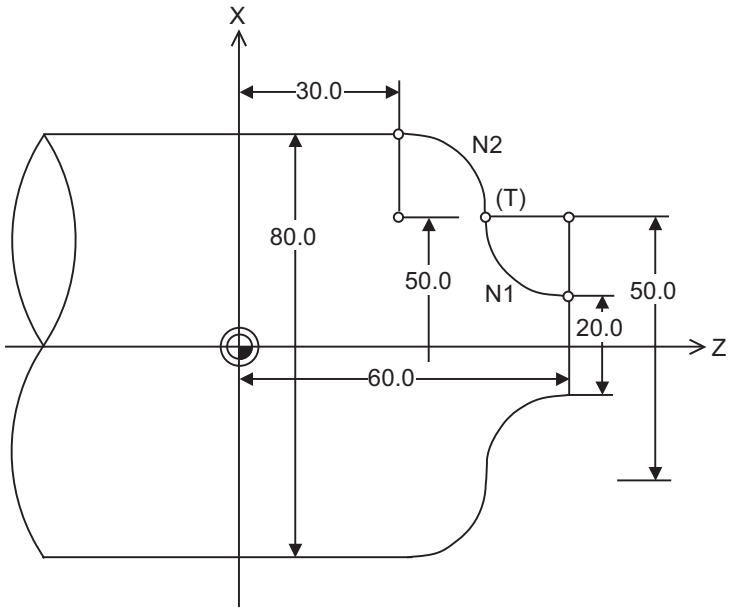


```
G01 X20.0 Z60.0;
N1 G02 I15.0 K0.0 F100;
N2 G03 X80.0 Z30.0 I-15.0 K0.0;
```

(mm)

(2) **IK and R commands**

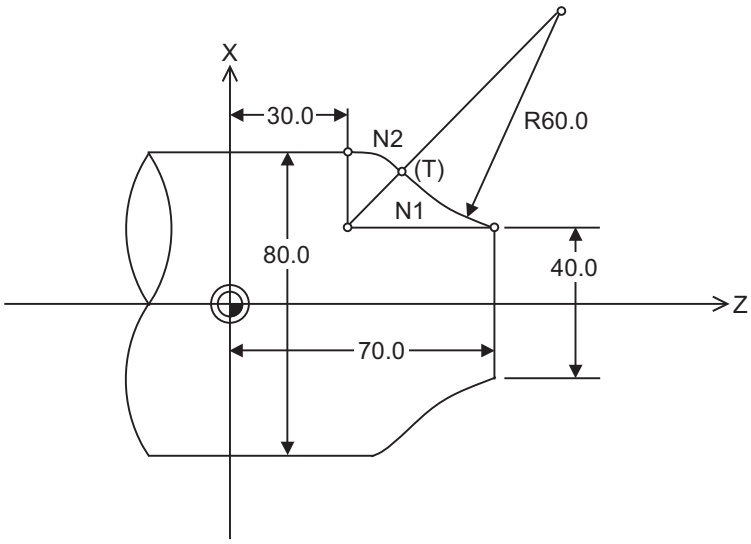


```
G01 X40.0 Z70.0 F100;
N1 G02 R60.0;
N2 G03 X80.0 Z30.0 I-20.0 K0.0;
```

(mm)

## Relationship with other functions

| Command | Tool path |
|---|---|
| Geometric IB + corner chamfering II<br><br>N1 G09 I_ K_ ;<br>N2 G02 X_ Z_ R_ ,C_ ;<br>G02 X_ Z_ R_ ; | 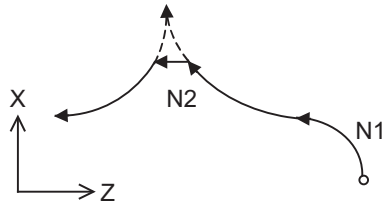 |
| Geometric IB + corner rounding II<br><br>N1 G03 I_ K_ ;<br>N2 G02 X_ Z_ R_ ,R_ ;<br>G02 X_ Z_ R_ ; | 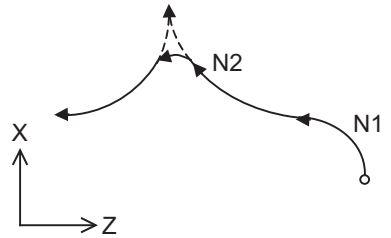 |
| Geometric IB + corner chamfering II<br><br>N1 G03 I_ K_ ;<br>N2 G02 X_ Z_ R_ ,C_ ;<br>G01 X_ Z_ ; | 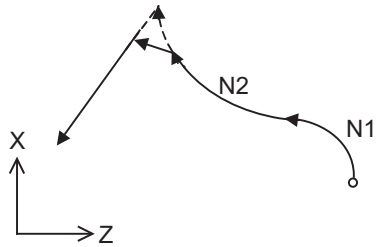 |
| Geometric IB + corner rounding II<br><br>N1 G03 I_ K_ ;<br>N2 G02 X_ Z_ R_ ,R_ ;<br>G01 X_ Z_ ; | 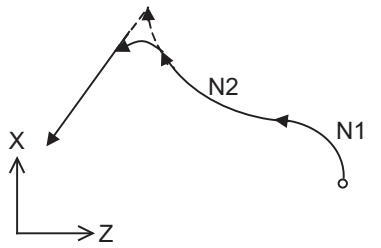 |

## 15.5.2 Geometric IB (Automatic Calculation of Intersection Point between Line And Circular Arc) ; G01 A_ , G02/G03 P_Q_H_

### Function and purpose

When the intersection point between a line and a circular arc is not indicated in the drawing though they intersect, it can be automatically calculated by commanding the following program.

### Command format (For G18 plane)

```
N1 G01 Aa1(A-a2) Ff1 ;
N2 G02(G03) Xx2 Zz2 Ii2 Kk2 Hh2 (,Hh2) Ff2 ;
```

```
N1 G02(G03) Ii1 Kk1 Hh1 (,Hh1) Ff1 ;
N2 G01 Xx2 Zz2 Aa3 (A-a4) Ff2 ;
```

| | |
|---|---|
| A | Linear angle (-360.000° to 360.000°) |
| I, K (*1) | Circular arc center coordinates (incremental position) (diameter/radius value command) in X and Z axes<br>1st block arc : Radius command incremental amount from the start point to the center<br>2nd block arc : Radius command incremental amount from the end point to the center |
| H (,H) | Selection of intersection point between line and circular arc<br>0: Intersection of the shorter line<br>1: Intersection of the longer line |

(*1) This command can be issued using P and Q (X and Z axes circular arc center coordinates (absolute position)) instead of I and K.

The circular arc center point for Y axis of G17 or G19 plane is specified with J (incremental position) or A (absolute position).

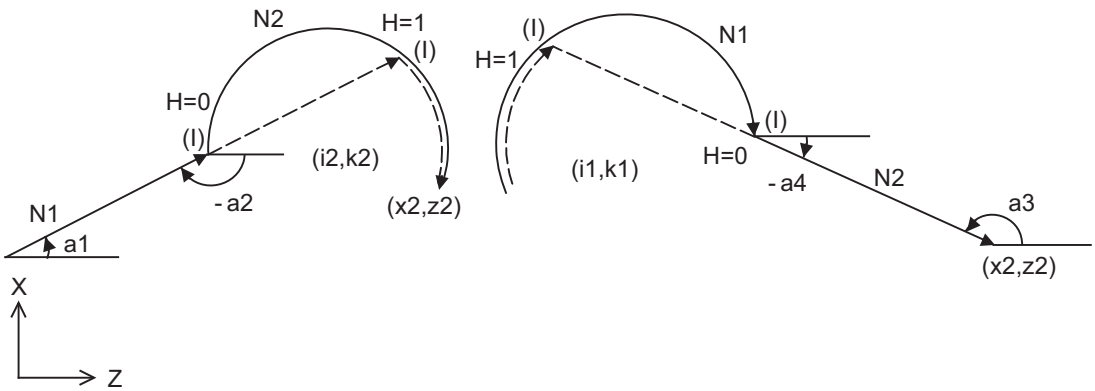


Path at H = 0

Path at H = 1

(I) Intersection point (calculated automatically) at H = 0 or 1

## Detailed description

(1) A program error (P390) occurs before the 1st block if there is no geometric IB specification.

(2) The gradient of the line is the angle to the positive (+) direction of its horizontal axis of the selected plane. The counterclockwise (CCW) direction is considered as positive (+) and the clockwise direction (CW) as negative (-).

(3) The gradient of the line can be commanded on either the start or end point side. Whether designated gradient is the starting point or the end point will be automatically identified.

(4) In case of the 2nd block arc, a program error (P395) occurs before the 1st block if there is no I/K (P/Q) command. A program error (P395) also occurs if there is no designation of "A" for the line.

(5) The end point coordinates of the 2nd block should be commanded with the absolute position. A program error (P393) occurs before the 1st block if commanded with the incremental position.

(6) A program error (P397) occurs before the 1st block if a straight line and arc that do not contact or intersect are commanded.

(7) The accuracy to calculate the intersection point is ±1 μm (fractions rounded up).

(8) If the start point of an arc block is identical with the end point, the result is a true circle.

(9) The error range at calculating the intersection point is set in parameter "#1084 RadErr".

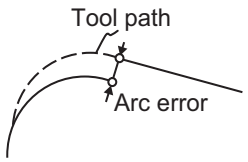


(10) When I or K is omitted, the values are regarded as "I0" and "K0". P and Q cannot be omitted.

(11) When H is omitted, the value is regarded as "H0".

(12) If R is commanded instead of P, Q (I, K) designation, the contact point between line and circular arc is calculated automatically.

(13) When the distance to the intersection from the line is the same as the distance from the arc (as in the figure below), the control by address H (short/long distance selection) is invalidated. In this case, the judgment is carried out based on the angle of the line.

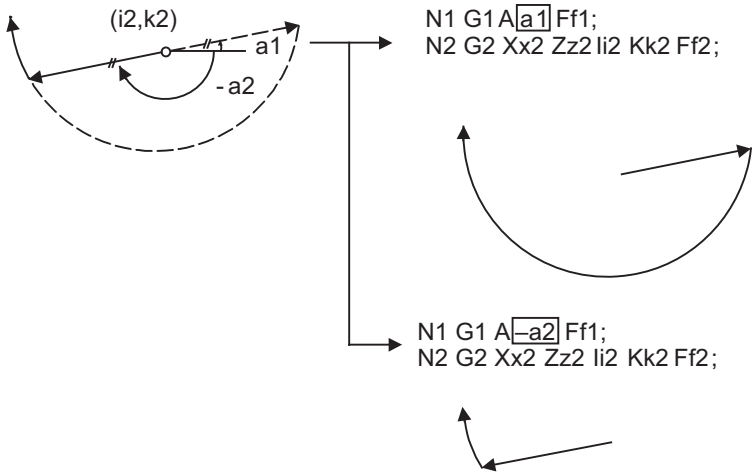


(14) Addresses being used as axis names cannot be used as command addresses for angles, circular arc center coordinates or intersection selections.

(15) If address "H" is used as an axis name, the intersection point must be specified with ",H".

(16) If "H" and ",H" are programmed in the same block, ",H" is treated as specifying the intersection point.

(17) When the circular arc center of the 2nd block for geometric IB is commanded with IJK and the pitch is designated with address "P" or ",P", the helical interpolation is carried out for the arc of the 2nd block after geometric IB has been completed. Refer to "6.7 Helical Interpolation; G02, G03" for details.

(18) Single block operation stops at the 1st block.

(19) G codes of the G modal group in the 1st block can be omitted.

(20) When geometric IB is commanded, two blocks are pre-read.

### Program example

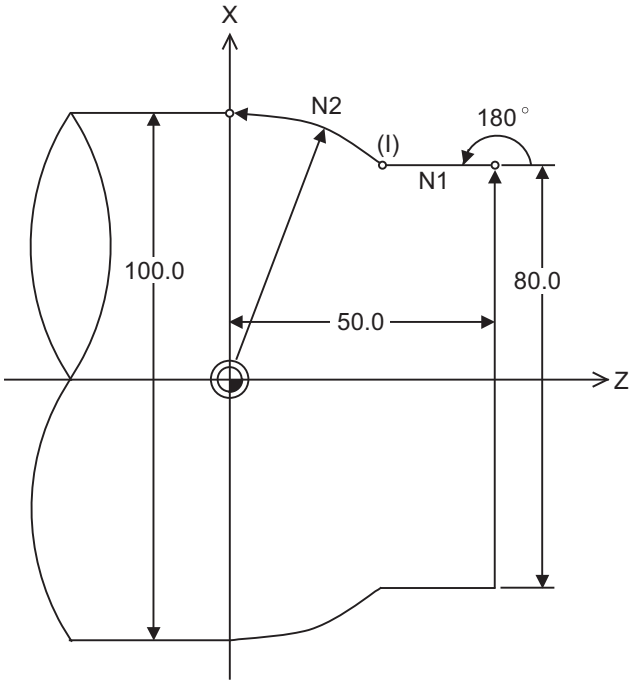


```
    G01 X80.0 Z50.0 F100;
N1 G01 A180.0;
N2 G03 X100.0 Z0 I-50. K0;
```

(mm)

## Relationship with other functions

| Command | Tool path |
|---|---|
| Geometric IB + corner chamfering II<br><br>N1 G01 A_ ,C_ ;<br>N2 G03 X_ Z_ I_ K_ H_ ; | 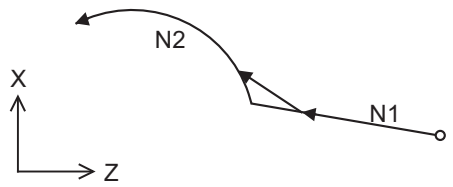 |
| Geometric IB + corner rounding II<br><br>N1 G01 A_ ,R_ ;<br>N2 G03 X_ Z_ I_ K_ H_ ; | 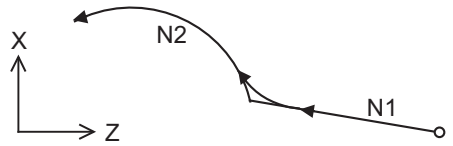 |
| Geometric IB + corner chamfering II<br><br>N1 G01 A_ ;<br>N2 G03 X_ Z_ I_ K_ H_ ;<br>G01 X_ Z_ ; | 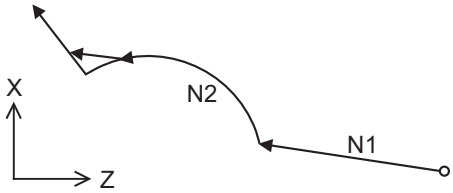 |
| Geometric IB + corner rounding II<br><br>N1 G01 A_ ;<br>N2 G03 X_ Z_ I_ K_ H_ ;<br>G01 X_ Z_ ; | 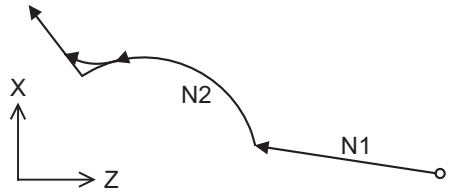 |
| Geometric IB + corner chamfering<br><br>N1 G02 I_ K_ H_ ;<br>N2 G01 X_ Z_ A_ ,C_ ;<br>G01 X_ Z_ ; | 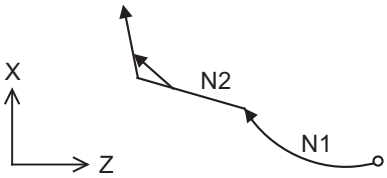 |
| Geometric IB + corner rounding II<br><br>N1 G02 I_ K_ H_ ;<br>N2 G01 X_ Z_ A_ ,R_ ;<br>G01 X_ Z_ ; | 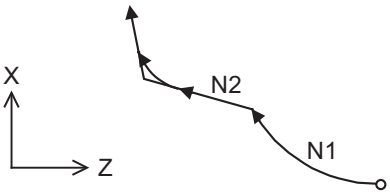 |

## 15.5.3 Geometric IB (Automatic Calculation of Contact Point between Line And Circular Arc) ; G01 A_ , G02/G03 R_H_

### Function and purpose

When the contact point between a line and a circular arc is not indicated in the drawing though they are in contact, it can be automatically calculated by commanding the following program.

### Command format (For G18 plane)

```
N1 G01 Aa1(A-a2) Ff1;
N2 G03(G02) Xx2 Zz2 Rr2 Ff2;
```

```
N1 G03(G02) Rr1 Ff1;
N2 G01 Xx2 Zz2 Aa3(A-a4) Ff2;
```

| | |
|---|---|
| A | Linear angle (-360.000° to 360.000°) |
| R | Circular arc radius |

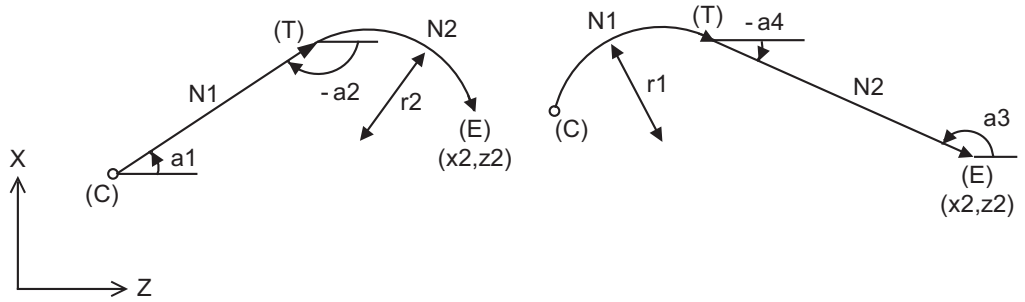


(C) Current position
(E) End point coordinates
(T) Contact point (calculated automatically)

## Detailed description

(1) A program error (P390) occurs before the 1st block if there is no geometric IB specification.

(2) The gradient of the line is the angle to the positive (+) direction of its horizontal axis of the selected plane. The counterclockwise (CCW) direction is considered as positive (+) and the clockwise direction (CW) as negative (-).

(3) The gradient of the line can be commanded on either the start or end point side. Whether the commanded slope is on the start or end point side is identified automatically inside the NC unit.

(4) In case of the 2nd block arc, a program error (P395) will occur before the 1st block if there is no R designation. A program error (P395) also occurs if there is no designation of "A" for the line.

(5) The end point coordinates of the 2nd block should be commanded with the absolute position. A program error (P393) occurs before the 1st block if commanded with the incremental position.

(6) A program error (P397) occurs before the 1st block if a straight line and arc that do not contact are commanded.

(7) If the start point and the end point of an arc block is identical, the circular path command finishes immediately. A true circle cannot be specified.

(8) The accuracy to calculate the contact point is ±1 μm (fractions rounded up).

(9) The error range at calculating the contact point is set in parameter "#1084 RadErr".

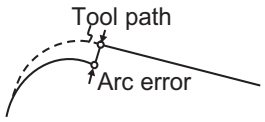


(10) If I or K (P or Q) is commanded instead of the R designation, the contact point between line and circular arc is calculated automatically.

(11) When the arc center of the 2nd block for geometric IB is commanded with IJK and the pitch is designated with address "P" or ",P", the helical interpolation is carried out for the arc of the 2nd block after geometric IB has been completed. Refer to "6.7 Helical Interpolation; G02, G03" for details.

(12) Single block operation stops at the 1st block.

(13) G codes of the G modal group 1 in the 1st block can be omitted.

(14) When geometric IB is commanded, two blocks are pre-read.

**Program example**

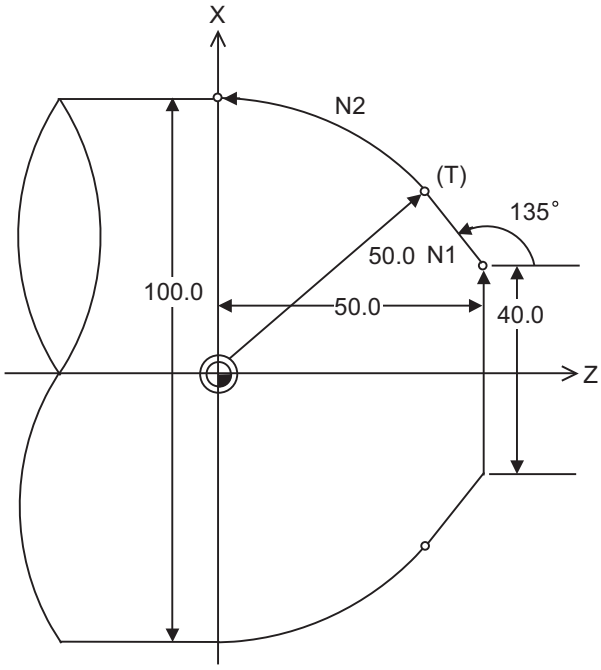


```
    G01 X40.0 Z50.0 F100;
N1 G01 A135.0;
N2 G03 X100.0 Z0.0 R50.0;
```

(mm)

## Relationship with other functions

| Command | Tool path |
|---|---|
| Geometric IB + corner chamfering<br><br>N1 G03 R_ ;<br>N2 G01 X_ Z_ A_ ,C_ ;<br>G01 X_ Z_ ; | 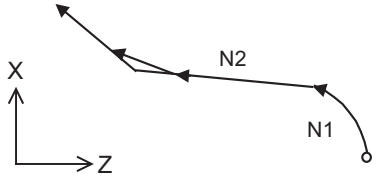 |
| Geometric IB + corner rounding<br><br>N1 G03 R_ ;<br>N2 G01 X_ Z_ A_ ,R_ ;<br>G01 X_ Z_ ; | 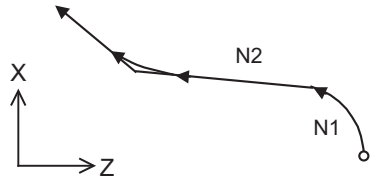 |
| Geometric IB + corner chamfering II<br><br>N1 G01 A_ ;<br>N2 G02 X_ Z_ R_ ,C_ ;<br>G01 X_ Z_ ; | 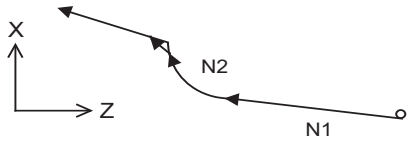 |
| Geometric IB + corner rounding II<br><br>N1 G01 A_ ;<br>N2 G02 X_ Z_ R_ ,R_ ;<br>G01 X_ Z_ ; | 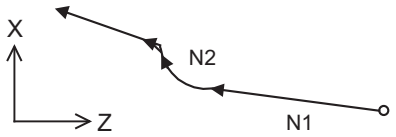 |

# 15.6 Manual Arbitrary Reverse Run Prohibition ; G127

## Function and purpose

The manual arbitrary reverse run function controls the feedrate, which is under automatic operation in memory or MDI mode, in proportion to the manual feedrate by the jog or the rotation speed by the manual handle, and manually carries out the reverse run.
After the automatic operation has been stopped in a block, the reverse run can be carried out back through the blocks (up to 20 blocks) that were executed before the block. If necessary, it is possible to correct the program buffer and execute the fixed program after carrying out the reverse run up to the return position.

This function (G127) is available to prevent the program from backing to blocks before the commanded block when carrying out the manual arbitrary reverse run.
The detailed setting and operation vary depending on the machine specifications. Refer to the Instruction Manual issued by the MTB.
"Forward run" means to execute blocks in the same order as for the automatic operation.
"Reverse run" means to process the executed blocks backward.
Whether the reverse run is prohibited for each part system depends on the MTB specifications (system variable #3003). Refer to "List of System Variables" for details.

## Command format

### All part system reverse run prohibit command

```
G127 ;
```

This command disables the program from running reverse to blocks before G127. In part systems that do not have this command executed, the program cannot run reverse before the timing with G127 commanded in any part system even if a block is in process.
No commands in the machining program can be backed in the reverse run mode. For some G codes, the operation differs from the above. Refer to "Relationship with Other Functions".

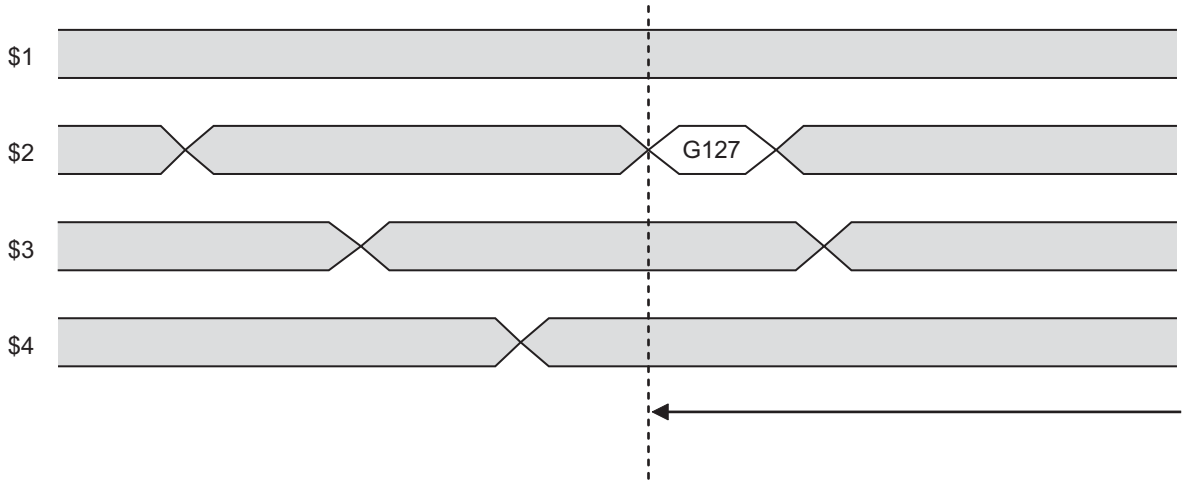


The reverse run is disabled before the G127 block in the 2nd part system.
The reverse run is canceled in the middle of a block in part systems other than the 2nd part system.

## Relationship with other functions

The following shows the relationship between the manual arbitrary reverse run command and G code.

### Note

- Fixed cycles or MSTB commands may be prohibited to reverse run or the reverse run operation on tapping cycle may differ depending on the MTB specifications (parameter "#1260 set32" or related PLC signals). Refer to the specifications of your machine tool.
- Even if the G61.1 or G05, for which reverse run is prohibited, is not commanded in the machining program, when the initial high-accuracy control (#1148) is valid, reverse run is to be prohibited because of the modal of G61.1 (the value of #1148 is "1") or G05 (the value of #1148 is "2", "3" or "4").

The lathe-system G code is shown based on the G code system 3.

| Symbol in "Reverse run" column | Operation |
|---|---|
| ○ *1 | Block with reverse run enabled |
| ○ *2 | Block with restricted-reverse run enabled Refer to the Remarks for restrictions. |
| Δ | Block with reverse run ignored. This block is ignored in both the forward and reverse run modes. |
| × *3 | Block with reverse run prohibited. This is intended only for the command blocks. |
| × *4 | Block with reverse run prohibited. The reverse run is also prohibited for all blocks after the mode has been switched by this block. |
| × *5 | Prohibits the reverse run in all part systems. |

| G code (Lathe system) | Function name | Reverse run | Remarks |
|---|---|---|---|
| G00 | Positioning | ○ *1 | - |
| G01 | Linear interpolation | ○ *1 | - |
| G02 | Circular interpolation CW | ○ *1 | - |
| G03 | Circular interpolation CCW | ○ *1 | - |
| G02.3 | Exponential interpolation CW | × *3 | - |
| G03.3 | Exponential interpolation CCW | × *3 | - |
| G04 | Dwell | ○ *1 | Dwell skip is invalid. |
| G07.1<br>G107 | Cylindrical interpolation | × *4 | - |
| G09 | Exact stop check | ○ *1 | - |
| G10 | Program data input (Parameter / Compensation amount) / Life management data registration | Δ | The reverse run is enabled, but data is not recovered. |
| G10.6 | Tool retract command | × *3 | - |
| G11 | Program data input cancel / Life management data registration cancel | Δ | The reverse run is enabled, but data is not recovered. |
| G12.1<br>G112 | Polar coordinate interpolation ON | × *4 | - |
| G13.1<br>G113 | Polar coordinate interpolation cancel | × *4 | - |
| G12.1 | Milling interpolation ON | × *4 | - |
| G13.1 | Milling interpolation cancel | × *4 | - |
| G14 | Balance cut OFF | ○ *1 | - |
| G15 | Balance cut ON | ○ *1 | - |
| G16 | Milling interpolation plane selection Y-Z cylindrical plane | × *3 | The reverse run is prohibited because a command can only be issued during milling. |
| G17 | X-Y plane selection | ○ *2 | Data is recovered using the modal information storage block. |

| G code (Lathe system) | Function name | Reverse run | Remarks |
|---|---|---|---|
| G18 | Z-X plane selection | ○ *2 | Data is recovered using the modal information storage block. |
| G19 | Y-Z plane selection | ○ *2 | Data is recovered using the modal information storage block. |
| G20 | Inch command | ○ *1 | Switched with the movement command just after commanded. |
| G21 | Metric command | ○ *1 | Switched with the movement command just after commanded. |
| G22 | Barrier check ON | × *3 | - |
| G23 | Barrier check OFF | × *3 | - |
| G22 | Soft limit ON | × *3 | - |
| G23 | Soft limit OFF | × *3 | - |
| G27 | Reference position check | × *3 | - |
| G28 | Automatic reference position return | × *3 | - |
| G29 | Start position return | × *3 | - |
| G30 | 2nd, 3rd and 4th reference position return | × *3 | - |
| G30.1 | Tool change position return 1 | × *3 | - |
| G30.2 | Tool change position return 2 | × *3 | - |
| G30.3 | Tool change position return 3 | × *3 | - |
| G30.4 | Tool change position return 4 | × *3 | - |
| G30.5 | Tool change position return 5 | × *3 | - |
| G31 | Skip/Multi-step skip function 2 | × *3 | - |
| G31.1 | Multi-step skip function 1-1 | × *3 | - |
| G31.2 | Multi-step skip function 1-2 | × *3 | - |
| G31.3 | Multi-step skip function 1-3 | × *3 | - |
| G33 | Thread cutting | ○ *2 | Actual cutting mode available. |
| G34 | Variable lead thread cutting | × *3 | Actual cutting mode available. |
| G35 | Circular thread cutting CW | × *3 | Actual cutting mode available. |
| G36 | Circular thread cutting CCW | × *3 | Actual cutting mode available. |
| G37 | Automatic tool length measurement | × *3 | - |
| G40 | Tool nose radius compensation cancel | ○ *2 | Data is recovered using the modal information storage block. |
| G41 | Tool nose radius compensation left | ○ *2 | Data is recovered using the modal information storage block. |
| G42 | Tool nose radius compensation right | ○ *2 | Data is recovered using the modal information storage block. |
| G43.1 | 1st spindle control mode | ○ *2 | Data is recovered using the modal information storage block. |
| G44.1 | Selected spindle control mode | ○ *2 | Data is recovered using the modal information storage block. |
| G46 | Tool nose radius compensation (automatic direction identification) ON | ○ *2 | Data is recovered using the modal information storage block. |
| G47.1 | All spindles simultaneous control mode | ○ *2 | Data is recovered using the modal information storage block. |
| G92 | Coordinate system setting / Spindle clamp speed setting | ○ *1 | - |
| G50.2<br>G250 | Tool spindle synchronization IB mode cancel<br>(Spindle - tool axis synchronization) | × *3 | - |
| G51.2<br>G251 | Tool spindle synchronization IB mode ON<br>(Spindle - tool axis synchronization) | × *3 | - |

| G code (Lathe system) | Function name | Reverse run | Remarks |
|---|---|---|---|
| G52 | Local coordinate system setting | ○ *2 | Data is recovered using the modal information storage block. |
| G53 | Machine coordinate system selection | ○ *2 | Data is recovered using the modal information storage block. |
| G54 | Workpiece coordinate system 1 selection | ○ *2 | Data is recovered using the modal information storage block. |
| G55 | Workpiece coordinate system 2 selection | ○ *2 | Data is recovered using the modal information storage block. |
| G56 | Workpiece coordinate system 3 selection | ○ *2 | Data is recovered using the modal information storage block. |
| G57 | Workpiece coordinate system 4 selection | ○ *2 | Data is recovered using the modal information storage block. |
| G58 | Workpiece coordinate system 5 selection | ○ *2 | Data is recovered using the modal information storage block. |
| G59 | Workpiece coordinate system 6 selection | ○ *2 | Data is recovered using the modal information storage block. |
| G54.1 | Work coordinate system selection 48 sets expanded | ○ *2 | Data is recovered using the modal information storage block. |
| G61 | Exact stop check mode | ○ *1 | - |
| G62 | Automatic corner override | ○ *1 | - |
| G63 | Tapping mode | ○ *1 | - |
| G64 | Cutting mode | ○ *1 | - |
| G65 | Macro call  Simple call | ○ *1 | - |
| G66 | User macro  Modal call A | ○ *1 | - |
| G66.1 | User macro  Modal call B | ○ *1 | - |
| G67 | User macro  Modal call cancel | ○ *1 | - |
| G68 | Facing turret mirror image ON | × *3 | - |
| G69 | Mirror image for facing tool posts OFF | × *3 | - |
| G68 | Mirror image for facing tool posts ON or balance cut mode ON | × *3/<br>○ *1 | The reverse run is enabled if balance cut is designated. |
| G69 | Mirror image for facing tool posts OFF or balance cut mode OFF | × *3/<br>○ *1 | The reverse run is enabled if balance cut is designated. |
| G68.1 | Coordinate rotation by program ON | × *4 | Speed control is required in the forward run mode. |
| G69.1 | Coordinate rotation by program cancel | × *4 | Speed control is required in the forward run mode. |
| G70 | Finishing cycle | ○ *1 | Data is created for each movement block in the fixed cycle. |
| G71 | Longitudinal rough cutting cycle | ○ *1 | Data is created for each movement block in the fixed cycle. |
| G72 | Face rough cutting cycle | ○ *1 | Data is created for each movement block in the fixed cycle. |
| G73 | Formed material rough cutting cycle | ○ *1 | Data is created for each movement block in the fixed cycle. |
| G74 | Face cut-off Cycle | ○ *1 | Data is created for each movement block in the fixed cycle. |
| G75 | Longitudinal cut-off cycle | ○ *1 | Data is created for each movement block in the fixed cycle. |
| G76 | Compound thread cutting cycle | ○ *2 | The reverse run is enabled, but the synchronous feed is invalid. Actual cutting mode available. |

| G code (Lathe system) | Function name | Reverse run | Remarks |
|---|---|---|---|
| G76.1 | Multi-part system simultaneous thread cutting cycle I | ○ *2 | The reverse run is enabled, but the synchronous feed is invalid. Actual cutting mode available. |
| G76.2 | Two-part system simultaneous thread cutting cycle II | ○ *2 | The reverse run is enabled, but the synchronous feed is invalid. Actual cutting mode available. |
| G77 | Longitudinal cutting fixed cycle | ○ *1 | Data is created for each movement block in the fixed cycle. |
| G78 | Thread cutting fixed cycle | ○ *2 | The reverse run is enabled, but the synchronous feed is invalid. Actual cutting mode available. |
| G79 | Face cutting fixed cycle | ○ *1 | Data is created for each movement block in the fixed cycle. |
| G80 | Fixed cycle for drilling cancel | ○ *1 | - |
| G81 | Fixed cycle (drill/spot drill) | ○ *1 | Data is created for each movement block in the fixed cycle. |
| G82 | Fixed cycle (drill/counter boring) | ○ *1 | Data is created for each movement block in the fixed cycle. |
| G83 | Deep hole drilling cycle (Z axis) | ○ *1 | Data is created for each movement block in the fixed cycle. |
| G83.1 | Stepping cycle | ○ *1 | Data is created for each movement block in the fixed cycle. |
| G83.2 | Deep hole drilling cycle 2 | ○ *1 | Data is created for each movement block in the fixed cycle. |
| G84 | Tap cycle (Z axis) | ○ *2 | The reverse run is enabled, but the synchronous feed is invalid. Actual cutting mode available. |
| G85 | Boring cycle (Z axis) | ○ *1 | Data is created for each movement block in the fixed cycle. |
| G87 | Deep hole drilling cycle (X axis) | ○ *1 | Data is created for each movement block in the fixed cycle. |
| G88 | Tap cycle (X axis) | ○ *2 | The reverse run is enabled, but the synchronous feed is invalid. Actual cutting mode available. |
| G89 | Boring cycle (X axis) | ○ *1 | Data is created for each movement block in the fixed cycle. |
| G84.1 | Reverse tapping cycle (Z axis) | ○ *2 | The reverse run is enabled, but the synchronous feed is invalid. Actual cutting mode available. |
| G84.2 | Synchronous tapping cycle | ○ *2 | The reverse run is enabled, but the synchronous feed is invalid. Actual cutting mode available. |
| G88.1 | Reverse tapping cycle (X axis) | ○ *2 | The reverse run is enabled, but the synchronous feed is invalid. Actual cutting mode available. |
| G90 | Absolute command | ○ *2 | Switched with the movement command just after commanded. |
| G91 | Incremental command | ○ *2 | Switched with the movement command just after commanded. |
| G92 | Coordinate system setting / Spindle clamp speed setting | ○ *1 | - |
| G92.1 | Workpiece coordinate preset | ○ *1 | - |
| G94 | Asynchronous feed (feed per minute ) | ○ *1 | - |
| G95 | Synchronous feed (feed per revolution) | ○ *1 | - |

| G code (Lathe system) | Function name | Reverse run | Remarks |
|---|---|---|---|
| G96 | Constant surface speed control ON | ○ *2 | Switched with the movement command just after commanded. |
| G97 | Constant surface speed control OFF | ○ *2 | Switched with the movement command just after commanded. |
| G98 | Fixed cycle<br>(Initial level return) | ○ *1 | - |
| G99 | Fixed cycle R point level return | ○ *1 | - |
| G110 | Mixed control I (cross control I) | × *3 | - |
| G111 | Axis name switch | × *3 | - |
| G113 | Tool spindle synchronization I cancel / Tool spindle synchronization IA (Spindle - spindle synchronization) mode cancel | × *3 | - |
| G114.1 | Spindle synchronization I | × *3 | - |
| G114.2 | Tool spindle synchronization IA (Spindle - spindle synchronization) mode ON | × *3 | - |
| G114.3 | Tool spindle synchronization II (Hobbing) ON | × *3 | - |
| G115 | Start point designation synchronization Type 1 | ○ *1 | - |
| G116 | Start point designation synchronization Type 2 | ○ *1 | - |
| G117 | M code output during axis traveling | × *3 | - |
| G122 | Sub part system control I | Δ | - |
| G125 | Control axis synchronization between part systems | × *5 | - |
| G126 | Control Axis Superimposition | × *3 | - |
| G140 | Arbitrary axis exchange control | × *3 | - |
| G141 | Arbitrary axis exchange return | × *3 | - |
| G144 | Sub part system control II | Δ | - |
| G145 | Wait for completion of sub part system OFF | Δ | - |
| G174 | Simple tool center point control | × *3 | - |
| G175 | Simple tool center point control cancel | × *3 | - |
| G176 | Simple inclined surface control | × *3 | - |
| G188 | Program format switch ON | × *3 | - |
| G189 | Program format switch cancel | × *3 | - |
| M98 | Subprogram call | ○ *1 | - |

# 15.7 Data Input by Program

## 15.7.1 Parameter Input by Program; G10 L70, G11

### Function and purpose

The parameters set from the setting and display unit can be changed in the machining programs.

For commanding data with decimal point, and character string data.
The data's command range conforms to the setting range of each parameter.

### Command format

**Data setting start command**

| | |
|---|---|
| **G10 L70 ;** | |
| **P__ S__ A__ H□__ ;** | **Bit parameter** |
| **P__ S__ A__ D__ ;** | **Numerical value parameter** |
| **P__ S__ A__ <character string> ;** | **Character string parameter** |

| | |
|---|---|
| P | Parameter No. |
| S | Part system No. |
| A | Axis No. |
| H | Bit type data |
| D | Numeric type data |
| character string | Character string data |

**Data setting end command**

| |
|---|
| **G11 ;** |

**Note**

(1) The sequence of addresses in a block must be as shown above.
When an address is commanded two or more times, the last command will be valid.

(2) The part system No. is set in the following manner. "1" for the 1st part system, "2" for 2nd part system, and so forth.
If the address S is omitted, the part system of the executing program will be applied.
As for the parameters common to part systems, the command of part system No. will be ignored.

(3) The axis No. is set in the following manner. "1" for 1st axis, "2" for 2nd axis, and so forth.
If the address A is omitted, the 1st axis will be applied.
As for the parameters common to axes, the command of axis No. will be ignored.

(4) Address H is commanded with the combination of setting data (0 or 1) and the bit designation □ (0 to 7).
Hd0: Sets the dth bit OFF. (d: 0 to 7)
Hd1: Sets the dth bit ON. (d: 0 to 7)

(5) Only the decimal number can be commanded with the address D.
The value that is smaller than the input setting increment (#1003 iunit) will be round off to the nearest increment.

(6) The character string must be put in angled brackets "<" and ">".
If these brackets are not provided, the program error (P33) will occur.
Up to 63 characters can be set.

(7) "G10 L70" must be commanded alone in a block, which also applies to "G11". A program error (P421) occurs if it is not commanded alone in a block.

(8) The parameter "#1078 Decimal pnt type 2" is disabled.

(9) The following data cannot be changed with the G10 L70 command:
- Tool compensation data
- Workpiece coordinate data
- PLC switch
- PLC axis parameter
- Device open parameters
- SRAM open parameters
- DeviceNet parameters

(10) The settings of the parameters with (PR) in the parameter list will be enabled after the power is turned OFF and ON. Refer to the parameter list in your manual.

## Precautions

### Parameter update timing

The timing for updating the spindle parameter and the NC axis parameter settings depends on the MTB specifications (parameter "#1254 set26/bit3").

| #1254 set26/bit3 | Spindle parameter | NC axis parameter |
|---|---|---|
| Invalid | The program updates the parameter settings, waiting for "all axes smoothing zero" in all part systems. | |
| Valid | The program updates the parameter settings without waiting for "smoothing zero". (*1) | The program updates the parameter settings, waiting for "all axes smoothing zero" in control part systems. (*2)(*3) |

(*1) The parameters of the target spindle are not updated while the functions below are active. The parameters are updated after the functions have been completed.
When the target spindle for which the functions below are being executed is the reference spindle for spindle synchronization or guide bushing spindle synchronization, the parameters of the synchronized spindle are not also updated.
- Synchronous tapping cycle
- Tool spindle synchronization IC (Spindle-NC axis, Polygon)
- Tool spindle synchronization II (Hobbing)
- The spindle for spindle position control is in C axis mode and the C axis is in motion.
- Synchronous tapping cycle for superimposed spindle in spindle superimposition control state

(*2) The program updates the exchange axis under mixed control (cross axis control) or arbitrary axis exchange control, waiting for "all axes smoothing zero" in the exchange destination part system.

(*3) The program updates the synchronized axis or superimposed axis under the control axis superimposition, arbitrary axis superimposition, or control axis synchronization between part systems, waiting for "smoothing zero" of the reference axis and the synchronized axis or superimposed axis.
While the workpiece axis for the tool spindle synchronization II (hobbing) or the rotary axis is rotating in the spindle mode, the parameters of the target axis are not updated.

## Program example

(1) For G10 L70

| | |
|---|---|
| G10 L70 ; | |
| P6401 H71 ; | Sets "1" to "#6401 bit7". |
| P8204 S1 A2 D1.234 ; | Sets "1.234" to "#8204 of the 1st part system 2nd axis". |
| P8621 <X> ; | Sets "X" to "#8621". |
| G11 ; | |

## 15.7.2 Compensation Data Input by Program (Tool Compensation Amount) ; G10 L10/L11, G11

### Function and purpose

The tool offset can be set or changed using the G10 command. When the command is given with absolute positions (X, Z and R), the commanded offset amount serves as the new offset amount, whereas when the command is given with incremental positions (U, W and C), the sum of present offset and the commanded offset serves as the new offset amount.

### Command format

**Tool length compensation input (L10)**

**G10 L10 P__ X__ (U__ ) Z__ (W__ ) (Additional axis name)__ (2nd additional axis name)__ R__ (C__ ) Q__ ;**

| | |
|---|---|
| P | Compensation No. |
| X, Z | Compensation amount for each axis (absolute) |
| U, W | Compensation amount for each axis (incremental) |
| Additional axis name | Tool compensation amount for additional axes (absolute) |
| 2nd additional axis name | Tool compensation amount for 2nd additional axis (absolute) |
| R | Nose R compensation amount (absolute) |
| C | Nose R compensation amount (incremental) |
| Q | Hypothetical tool nose point |

**Tool nose wear compensation input (L11)**

**G10 L11 P__ X__ (U__ ) Z__ (W__ ) (Additional axis name)__ (2nd additional axis name)__ R__ (C__ ) Q__ ;**

| | |
|---|---|
| P | Compensation No. |
| X, Z | Compensation amount for each axis (absolute) |
| U, W | Compensation amount for each axis (incremental) |
| Additional axis name | Tool compensation amount for additional axes (absolute) |
| 2nd additional axis name | Tool compensation amount for 2nd additional axis (absolute) |
| R | Nose R compensation amount (absolute) |
| C | Nose R compensation amount (incremental) |
| Q | Hypothetical tool nose point |

When there is no L command with tool length compensation input (L10) or tool nose wear compensation input (L11).

| | |
|---|---|
| Tool length compensation input command | P = 10000 + Compensation No. ("10001" and after) |
| Tool nose wear compensation input command | P = Compensation No. ("1" and after) |

**Compensation input cancel**

**G11 ;**

## Detailed description

(1) The following table shows the compensation Nos. and the setting ranges of the hypothetical tool nose points.

| Address | Meaning | Setting range | |
|---|---|---|---|
| | | L10 | L11 |
| P | Compensation No. | ♦When the L command is issued:<br>1 to maximum number of tool compensation sets<br>♦When the L command is not issued:<br>10001 to (10000 + Maximum number of tool compensation sets) | When the L command is/is not issued:<br>1 to Maximum number of tool compensation sets |
| Q | Hypothetical tool nose point | 0 to 9 | |

<Note>

♦The number of tool offset sets will differ according to the model and parameter, so check the specifications.

(2) A program error (P35) occurs for any value that does not match the compensation amount setting unit after command unit conversion. With an incremental command, the setting range for the compensation amount is the sum of the present setting value and commanded value.

## Precautions

(1) Compensation amount setting range check
The maximum value of the wear compensation amount and the maximum additional value for the wear compensation input check respectively take precedence for a single-time compensation amount in the maximum value and incremental command of the wear compensation amount, and when an amount greater than these values has been commanded, program error (P35) occurs.

(2) G10 is a non-modal command and is valid only in the commanded block.

(3) Compensation input can be performed similarly for the additional axis but even when the C axis has been designated as the additional axis or the 2nd additional axis, address C is handled as an incremental command of the nose R in the L10 or L11 command. The additional axis and the 2nd additional axis can only be compensated by the absolute setting.

(4) If an illegal L No. and tool compensation No. are commanded, program errors (P172 and P170) occur respectively.

(5) A program error (P35) occurs when the compensation amount exceeds the setting range.

(6) Though X/Z and U/W addresses can be commanded together in a single block, the last command will be valid if both addresses (X and U, or Z and W) were commanded to the same compensation amount.

(7) A program error (P33) occurs when no input data is commanded for the "G10L10" or "G10L11" command.

(8) Decimal point is valid for compensation amount.

(Example) When the "G10 L10 P3 Z50. ;" block is executed, the following data will be input:

[Tool length data]

| # | Z |
|---|---|
| 3 | 50.000 |

(9) When G40 to G42 and G10 are commanded in the same block, whether a program error (P45) occurs or G40 to G42 are ignored depends on the MTB specifications (parameter "#1241 set13/bit0").

(10) Do not command G10 in the same block as the fixed cycle and subprogram call command. This will cause malfunctioning and program errors.

(11) When the parameter "#1100 Tmove" is set to "0" and T command is issued in the same block as G10, the compensation will be performed in the following block.

(12) If no input data is commanded for the G10P0 command (L command is omitted), it will be ignored.

## 15.7.3 Compensation Data Input by Program (Workpiece Offset Amount) ; G10 L2/L20, G11

### Function and purpose

The workpiece offset amount can be set or changed using the G10 command. When the command is given with absolute positions (X, Z and R), the commanded offset amount serves as the new offset amount, whereas when the command is given with incremental positions (U, W and C), the sum of present offset and the commanded offset serves as the new offset amount.

### Command format

**Workpiece coordinate system offset input (L2)**

| |
|---|
| **G10 L2 P__X__ (U__ ) Z__ (W__ ) ;** |

| | |
|---|---|
| P | Compensation No.<br>P0: Designation of external workpiece coordinate system<br>P1 to P6: Designation of G54 to G59 workpiece coordinate system |
| X, Z | Compensation amount for each axis (absolute) |
| U, W | Compensation amount for each axis (incremental) |

**Note**

(1) When address P is omitted, set the offset amount in the currently selected workpiece coordinate system (G54 to G59). When the G54.1 modal is active, a program error (P35) occurs.

**Extended workpiece coordinate offset amount setting (L20)**

| |
|---|
| **G10 L20 P__X__ (U__) Z__ (W__ ) ;** |

| | |
|---|---|
| P | "n" No. of G54.1 Pn (1 to 48) |
| X, Z | Offset amount for each axis (absolute) |
| U, W | Offset amount for each axis (incremental) |

**Note**

(1) The specifications of the extended workpiece coordinate system selection are required.

(2) When address P is omitted, set the offset amount in the currently selected "G54.1 Pn". When the G54 to G59 modals are active, a program error (P33) occurs.

**Compensation input cancel**

| |
|---|
| **G11 ;** |

### Detailed description

A program error (P35) occurs for any value that does not match the compensation amount setting unit after command unit conversion.
With an incremental command, the setting range for the compensation amount is the sum of the present setting value and commanded value.

## Precautions

(1) G10 is non-modal command and is valid only in the commanded block.

(2) A program error (P172) occurs if an illegal L No. is commanded.

(3) When the P command is omitted during workpiece coordinate system offset input (L2 or L20), it will be handled as the data input of currently selected workpiece offset.

(4) A program error (P35) occurs when the compensation amount exceeds the setting range.

(5) Though X/Z and U/W addresses can be commanded together in a single block, the last command will be valid if both addresses (X and U, or Z and W) was commanded to the same compensation amount.

(6) A program error (P33) occurs when no input data is commanded for the "G10L2" or "G10L20" command.

(7) Decimal point is valid for compensation amount.

(8) When G40 to G42 and G10 are commanded in the same block, whether a program error (P45) occurs or G40 to G42 are ignored depends on the MTB specifications (parameter "#1241 set13/bit0").

(9) Do not command G10 in the same block as the fixed cycle and subprogram call command. This will cause malfunctioning and program errors.

(10) For the multiple C axes system, workpiece offset amounts of these C axes are rewritten by inputting the workpiece offset.

(11) If no input data is commanded for the G10P0 command (L command is omitted), it will be ignored.

(12) It is recommended to command G10 in a block different from the one in which any of G54 to G59 and G54.1 is commanded.
When G10 and any of G54 to G59 and G54.1 are commanded in the same block, it operates as follows.

When "#1274 ext10/bit5" is set to "0"

| | | |
|---|---|---|
| G10 G54 Pn Xx ; | | Changes the modal to G54 and executes "G10 Pn". |
| G10 G54 Xx ; | (without "P") | Changes the modal to G54 and executes G10 for G54. |
| G10 G54.1 Pn Xx ; | | Changes the modal to G54.1 Pn and executes G10 for "G54.1 Pn". |
| G10 G54.1 Xx ; | (without "P") | Program error (P33) |

When "#1274 ext10/bit5" is set to "1" ("G54 Pn" is handled as "G54.1 Pn")

| | | |
|---|---|---|
| G10 G54 Pn Xx ; | | Program error (P33) |
| G10 G55 Pn Xx ; | | Changes the modal to G55 and executes "G10 Pn". |
| G10 G54 Xx ; | (without "P") | Changes the modal to G54 and executes G10 for G54. |
| G10 G54.1 Pn Xx ; | | Program error (P33) |
| G10 G54.1 Xx ; | (without "P") | Program error (P33) |

## 15.7.4 Material Shape Input by Program; G10 L101, G11

### Function and purpose

This function sets the material shape data of the 3D solid program check (hereinafter referred to as "3D check") using the machining program. Using this function saves the step to input material shapes on the screen when the 3D check is executed.

### Command format

**Material shape settings from the program**

| | |
|---|---|
| **G10 L101;** | **Data setting start command** |
| **C_ R_ D_ E_ L_ A_ K_ W_ F_ P_ H_ I_ J_ ;** | **Data setting command** |

| | | |
|---|---|---|
| C | Material shape | Specify the material shape. (Cannot be omitted.)<br>1: Pipe 2: Prism |
| R | Number of corners | Specify the number of corners when the material is in the shape of a prism.<br>Setting range: 3 to 99<br>When the material is in the shape of a prism, the shape will be assumed to be a square if this setting is omitted.<br>When the material is in the shape of a pipe, this setting is ignored even if the number of corners is entered. |
| D | External diameter of material | Specify the external diameter of the material. When the material is in the shape of a prism, specify the length between the opposite sides of the material if the number of corners is even, or the diameter of the circumscribed circle if the number of corners is odd.<br>Setting range: 0.001 to 99999.999 mm, 0.0001 to 9999.9999 inch<br> 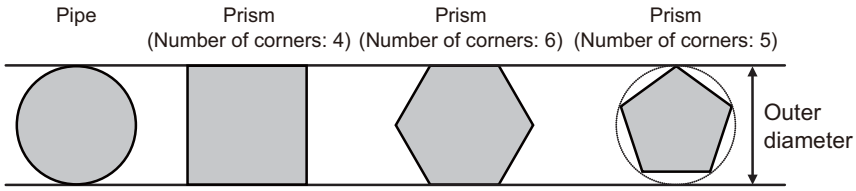 |
| E | Internal diameter of material | Specify the internal diameter of the hole in the material. When the material is in the shape of a prism, specify the length between opposite sides of the hole if the number of corners is even, or the diameter of the circumscribed circle if the number of corners is odd.<br>Setting range: 0.000 to 99999.999 mm, 0.0000 to 9999.9999 inch<br> 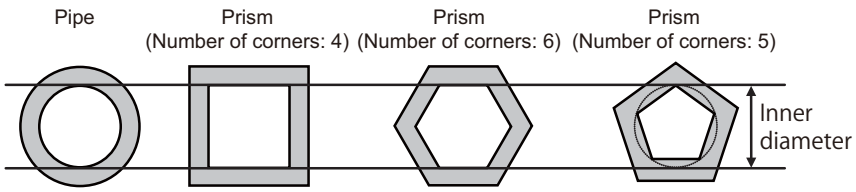 <br>If there is not a hole in the material, specify "0.000". |
| L | Material length | Specify the length of the material.<br>Setting range: 0.001 to 99999.999 mm, 0.0001 to 9999.9999 inch<br> 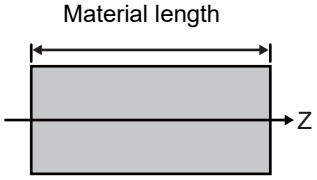 |

| | | |
|---|---|---|
| A | Mounting angle | Specify the mounting angle of a prism. For the mounting angle, set the angle that is formed by the X axis and one angle in the material.<br>Set CCW to the positive direction for the mounting angle.<br>Setting range: 0.000 to 359.999°<br> 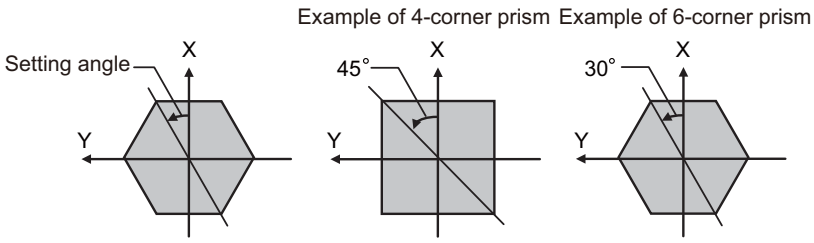 <br><br>This setting is valid only when material is in the shape of a prism.<br>If the material is in the shape of a pipe, the mounting angle setting is ignored even if the mounting angle is entered. |
| K | Front face workpiece zero point position Z | Specify the machining allowances of the material face. The machining allowance is the distance on the Z axis between the face and the workpiece zero point. The machining allowance position from the material face is treated as the workpiece zero point.<br>Setting range: -1, 0.000 to 99999.999 mm, -1, 0.0000 to 9999.9999 inch<br> 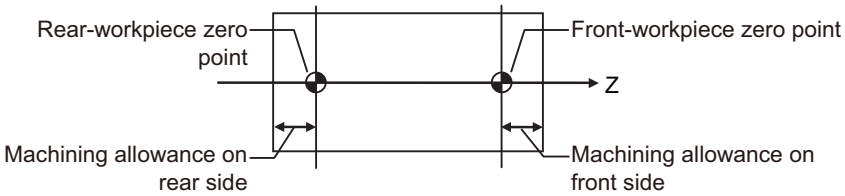 <br><br>[When the common workpiece zero point is used for machining of both the front and rear faces]<br>Designate only the workpiece zero point for either the front or rear face, then set "-1" to the workpiece zero point that is not used.<br><br>[When the separate workpiece zero point is used for machining of both the front and rear faces]<br>Set both workpiece zero points of the front and rear faces.<br><br>The rear workpiece zero point position Z can be set only when the spindle number on the rear face side is commanded. (This depends on the MTB specifications (parameter "#12628 sub sp no".)<br>"-1" cannot be set for both workpiece zero points of the front and rear faces. (A setting error will occur.) |
| W | Rear workpiece zero point position Z | |
| F | Material color | Specify the material color, machining surface color, tap machining surface color, interference surface color, and cross-section surface color.<br>1: Gray 2: Red 3: Yellow<br>4: Blue 5: Green 6: Light blue<br>7: Purple 8: Pink |
| P | Machining surface color | |
| H | Machining surface color (Tap / Thread) | |
| I | Interference surface color | |
| J | Cross-section surface color | |

| | |
|---|---|
| **G11;** | **Data setting end command** |

## Note

(1) Omitted addresses cannot be set.

(2) If address "C" is omitted, a program error (P422) will occur.

(3) For M80 Series, the workpiece shape data is rewritten during the graphic check.

(4) For M800W Series, M800S Series, and M80W Series, this change is only reflected on the graphic check drawing. The workpiece shape data is not rewritten.

## Detailed description

### Material shape settings from the program

This function sets a material shape on the 3D check screen from the machining program.
The 3D check sets the material shape using the data setting command of this function, and switches the drawing of materials at the timing of the subsequent data end command (G11). Then, the machined state is initialized, and the material is drawn in the raw state.

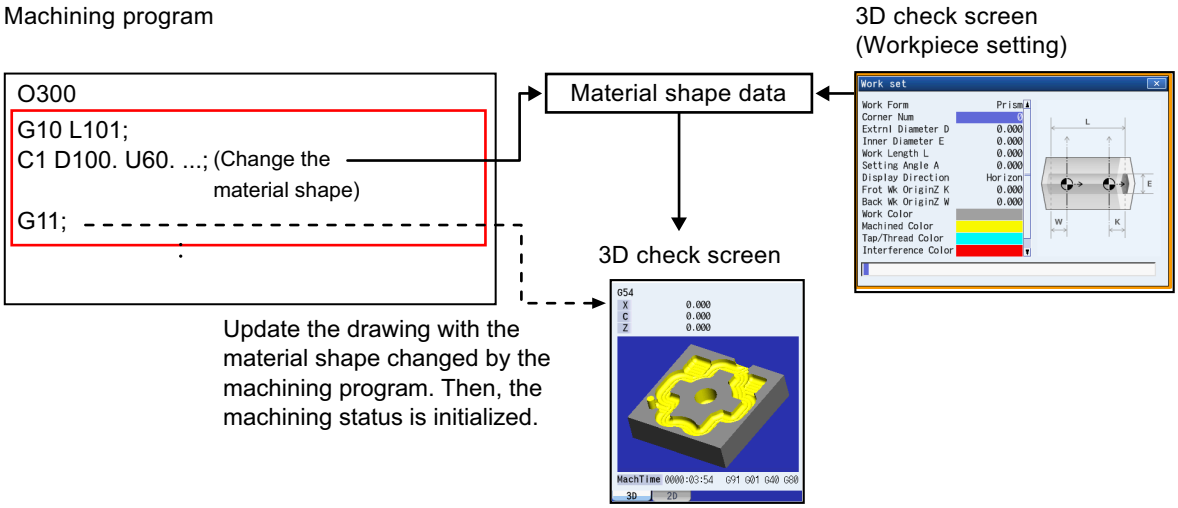


## Program example

(1) Material shape settings from the program

| | |
|---|---|
| G10 L101; | |
| C1 D100. U60. R200. K10. W10.; | Material shape = pipe<br>Material external diameter = 100 mm<br>Material internal diameter = 60 mm<br>Material length = 200 mm<br>Front face workpiece zero point position Z = 10 mm<br>Rear workpiece zero point position Z = 10 mm |
| G11; | |

## Precautions

(1) If the G10 or G11 command is not issued alone in a block, a program error (P422) will occur.
(2) If a block contains an address whose data is out of range, a program error (P35) will occur.
(3) If a block contains an illegal address, a program error (P32) will occur.
(4) The parameter "#1078 Decpt2" is valid for position commands (K address, W address).
Other command addresses comply with the minimum input unit ("#1015 cunit"). (MTB specifications)
(5) The parameter "#8044 UNIT*10" is invalid.
(6) The command unit of parameters to be input in mm/inch can be switched by G20/G21.

# 15.8 Tool Life Management

## 15.8.1 Tool Life Management II; T****99, T****88

### Function and purpose

Tool life management divides the tools being used into several groups, and manages the tool life (with cutting hours or number of cuttings in each group. When it comes to the end of tool life, a similar spare tool in the same group will be selected in order. This tool life management function with spare tools allows unmanned operation over a long time.
The number of tools or groups for which the tool life management is available depends on the specifications.

Using the G10 command (non-modal command), the tool life management data can be registered, changed and added to, and preregistered groups can be deleted.

### Command format

| | |
|---|---|
| **T****99 ;** | **Starts a use of a tool in the group designated by "****".** |

| | |
|---|---|
| **T****88 ;** | **Cancels tool offset in the group designated by "****".** |

| | |
|---|---|
| P **** | Group No. (1 to 9999)<br>"T****88" is equal to "TΔΔ00". (However, "ΔΔ" indicates the tool number of the tool in use.) |

## Program example

| | |
|---|---|
| :<br>T0199 ; | Starts use of group 01 tool. |
| :<br>: | |
| T0188 ;<br>:<br>: | Cancels group 01 tool compensation.<br>For example, when the tool number of the tool in use is "17", this is equivalent to "T1700". |
| T0609 ;<br>:<br>: | Select tool number "06" and offset number "09".<br>Life management is not carried out for the tool "06". |
| T0600 ;<br>:<br>: | Cancels offset of the tool "06". |
| T0299 ;<br>:<br>: | Starts use of group 02 tool. |
| T0199 ;<br>: | Starts use of group 01 tool.<br>If the selected tool has several compensation Nos., the second compensation No. will be selected. |

### Note

- When setting or changing tool life management data, be sure to select the tool group again using T****99. When the data are set or changed with tools having been selected, if cutting is executed, the tool life may not be managed correctly.
- The T****99 command and T****88 command may not be available depending on the MTB specifications. (Parameter "#1441 Tcode_Method_Chg" (T command method switching))
  The T command at this time acts as a tool function. When using T****99 command and T****88 command as a command for the tool life management, be sure to set this parameter to "0".

## Operation example

**Example of tool selection operation (When one tool has several compensation Nos.)**

(1) To use several compensation Nos. with one tool, select the next compensation No. for each T****99 command.

(2) If T****99 is commanded for more times than the number of registered compensation Nos., the last compensation No. will be selected, and the operation will continue. (Refer to following.)

| Register to group 1 | Program | Tool selection | |
|---|---|---|---|
| T1701 | T0199 ;<br>: | Equivalent to T1701 | |
| T1702 | T0199 ;<br>: | Equivalent to T1702 | |
| T1703 | T0199 ;<br>: | Equivalent to T1703 | |
| T2104 | T0199 ;<br>: | Equivalent to T1703<br>: | |
| (Group 1) | : | : | (Hereafter, same until tool 17 reaches the end of life.) |

(3) If the above program is executed after resetting with M02/M30, or by resetting with external reset, the head compensation No will again be selected.

## 15.8.2 Tool Life Management Data Input; G10 L3, G11

### Function and purpose

In tool life management II, it is possible to register, change, or add the tool life management data and delete a registered group using the G10 command (non-modal command).
Such a command is not available in tool life management I. If commanded, a program error (P39) occurs.

### Command format

**Start of life management data registration**

```
G10 L3 ;
P__ L__ N__ ;   (First group)
T__ ;
T__ ;
P__ L__ N__ ; (Next group)
T__ ;
T__ ;
```

| | |
|---|---|
| P | Group No., (1 to 9999) |
| L | Tool life for each tool (0 to 999999 minutes, or 0 to 999999 times) |
| N | Method (0: Time management. 1: Use count management) |
| T | Tool No. (1 to 99999999)<br>The spare tools are selected in the order of the tool Nos. registered here.<br>The range varies depending on the specifications. |

**End of life management data registration**

```
G11 ;
```

## Operation example

| Program example | Operation |
|---|---|
| G10 L3 ; | After deleting all group data, registration starts. |
| P10 L10 N0 ; | Group No. "10" is registered. |
| T1010 ;<br>T1112 ; | A combination of tool No. "10" and compensation No. "10" and that of tool No. "11" and compensation No. "12" are registered in group No. "10". |
| P11 L30 N0 ; | Group No. "30" is registered. |
| T3030 ; | Tool No. "30" and compensation No. "30" are registered in group No. "30". |
| G11 ; | The registration ends. |
| M02 ; | The program ends. |

## Precautions

(1) When the program is executed, all data (group No., tool No., life data) registered previously will be deleted.

(2) The group No. designated with P does not have to be consecutive, but it should be set in ascending order if possible. Because Nos will be displayed in ascending order on the screen, this will make monitoring easier. The group No. cannot be commanded in duplicate. If commands are duplicated, a program error (P49) occurs.

(3) If the life data (L_) is omitted, the life data for that group will be "0". If "N_" which specifies method is omitted, the method for that group depends on the MTB specifications (parameter "#1106 Tcount").

(4) Programming with a sequence No. is not possible between G10 L3 and G11. A program error (P33) occurs.

(5) When the "usage data count valid" signal (YC8A) is ON, whether or not "G10 L3" can be commanded depends on your CNC model.

[M8 series S/W version D6 or later]

The "G10L3" command is available. If tool life management data is registered while the tool is selected, the cumulative usage data is not updated even if cutting is performed. Select the tool group again using the "T****99" command.

[Others]

The G10L3 command is not available. A program error (P177) occurs.

## 15.8.3 Allocation of the Number of Tool Life Management Sets to Part Systems

### Function and purpose

The number of tool life management sets can be set per part system.
This function is divided into following methods and which one is used depends on the MTB specifications (parameters "#1439 Tlife-SysAssign", "#12055 Tol-lifenum").

Arbitrary allocation: Arbitrarily allocates the number of tool life management sets to each part system.
Fixed allocation: Automatically and evenly allocates the number of tool life management sets to each part system.

The arbitrary allocation enables the efficient allocation because when a certain part system needs only a small number of tool life management sets, the rest can be allocated to another part system. If an auxiliary-axis part system does not need the tool life management sets at all, the number of tool life management sets can be set to "0" for the auxiliary-axis part system.
Subsequent description is an example in the case where the number of tool life management sets in the system is 999 sets.

(1) Arbitrary allocation (with #1439=1)

The number of sets allocated to each part system depends on the MTB specifications (parameter "#12055 Tol-lifenum").
The following example shows the number of tool offset sets allocated when the lathe system is a 4-part system.

(a) When the number of tool life management sets is increased for the 1st part system ($1) of 4-part system

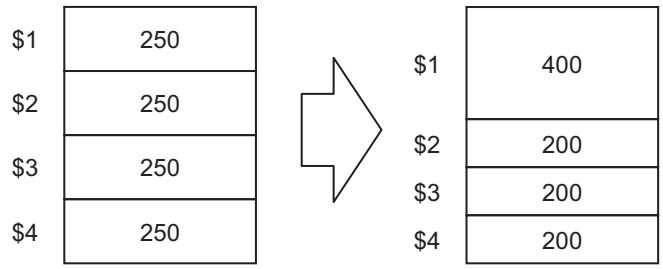


(b) When the number of tool life management sets is set to "0 sets" for the 3rd part system ($3) of 3-part system to use that part system as an auxiliary-axis part system

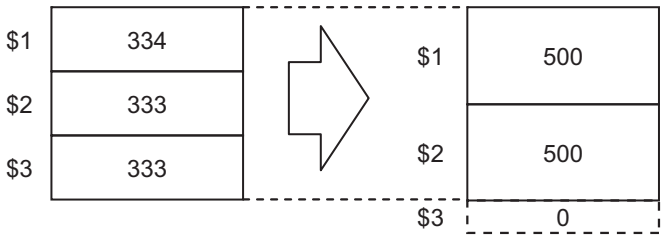

(2) Automatic and even allocation (with #1439=0)

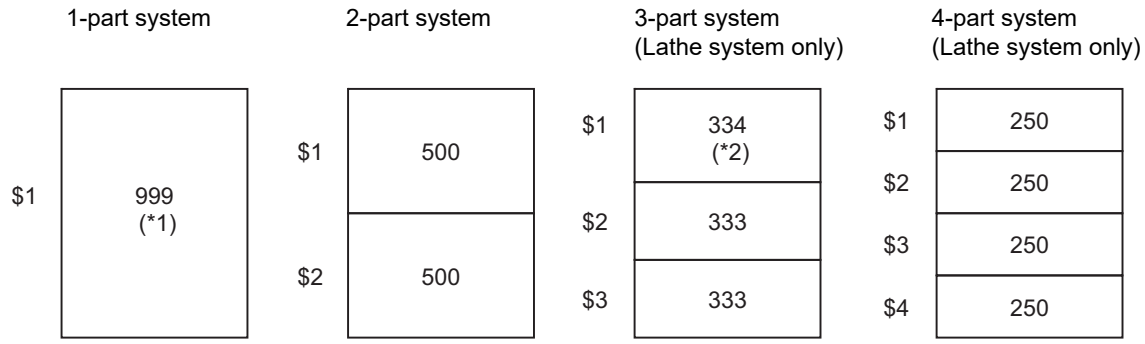


(*1) The maximum number of tool life management sets per part system is 999.

(*2) If there is any remainder, the remainder is allocated to the 1st part system.

## Precautions

(1) The maximum number of tool life management sets for 1-part system is 999.

(2) For 1-part system, up to the number of tool life management sets in the system is available regardless of the parameter setting.

(3) When the value of the parameter "#12055 Tol-lifenum" is equal to or lower than the number of tool life management sets in the system, the remainder is not allocated to any part system even if the specification allows arbitrary allocation.

(4) When the value of the parameter "#12055 Tol-lifenum" is equal to or lower than the number of tool life management sets in the system, system alarm (Y05) is generated even if the specification allows arbitrary allocation.

(5) Even if the specification allows arbitrary allocation, fixed allocation is applied if the parameter is "#12055 Tol-lifenum"= "0" for all part systems.

(6) When entering data into the tool life management file, if the number of tool life management data exceeds that of current tool life management sets, the excess tool life management data cannot be entered.

# 15.9 Axis Name Switch ; G111

## Function and purpose

This function switches the commanded axis and the control axis.
When using a function, such as the hole drilling cycle (G88), that can be commanded to the limited axis this function can be used to give commands to axes that cannot be commanded with the normal command methods.

## Command format

### Switching start command

```
G111 Axis name 1 Axis name 2 ;
```

| | |
|---|---|
| Axis name 1/Axis name 2 | The axis which operates after switching (The axis name set in the parameter "#1013 axname") |

### Switching end command

```
G111 ;
```

## Detailed description

(1) Axis name switch can be commanded simultaneously to several part systems.
While changing the axis name, G111 cannot be re-commanded.
If re-commanded, a program error (P411) will occur.
Command G111 alone in a block. If it is commanded in the same block with other G code, a program error (P33) will occur.

(2) G111 changes the command axis in the same part system.
During changing, "In axis name switch" signal turns ON.
If there is no commanded axis name, a program error (P32) will occur.

(3) The plane selection command modal (G17, G18, G19) will not change.
It automatically selects the plane which corresponds to the modal command when G111 is commanded.

(Example)

| Basic system parameter | | | Basic axis specification parameter | | | |
|---|---|---|---|---|---|---|
| #1026 | Basis axis I | X | | <1> | <2> | <3> |
| #1027 | Basic axis J | Y | #1013 axname | X | Y | Z |
| #1028 | Basic axis K | Z | #1022 axname2 | X1 | Y1 | Z1 |
| #1029 | Parallel axis I | | | | | |
| #1030 | Parallel axis J | | | | | |
| #1031 | Parallel axis K | | | | | |

(G18) G18 plane

:
:
:
:
:
:

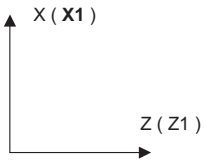


N10 G111 X Y ; X-Y axis switch
: G18 plane However, X command is applied to 2nd axis by
: G111 command.

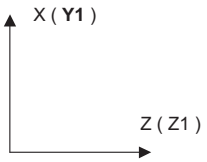

(4) Plane selection can be commanded during the axis name switching.

(Ex.1) Plane where no axis switching is carried out

G17 is commanded G18 is commanded G19 is commanded

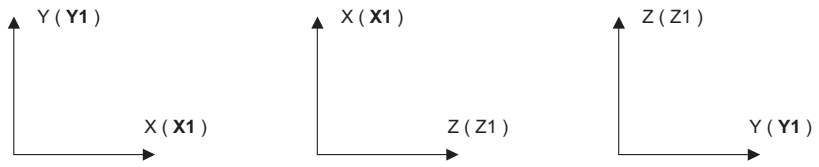


(Ex.2) Plane where axis name switching "G111 X Y ;" is carried out

G17 is commanded G18 is commanded G19 is commanded

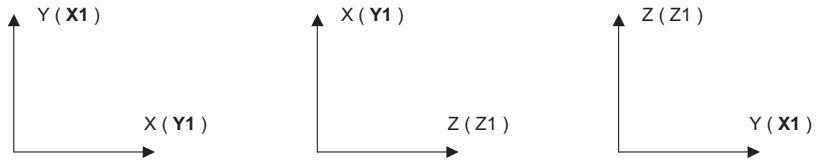


(5) Circular interpolation, nose R and fixed cycle are carried out on the selected plane.

(Ex.) Circular interpolation after the axis name is switched

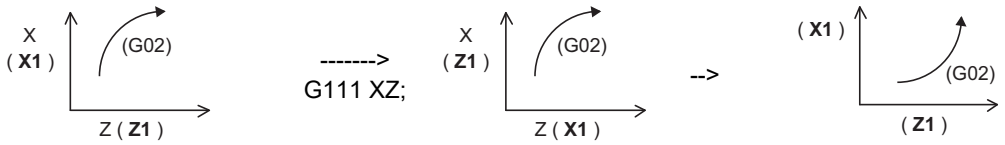


G02 command on the program | G02 command after the axis name is switched | Actual machine operation

(6) The plane selection will return to the state before G111 is commanded by canceling the axis name switching.

(7) Tool length compensation and tool nose wear compensation are applied to the axis before axis name switching. When X and Y are switched and then Y axis is moved by the X command, the compensation amount for Y axis is applied to Y axis and the compensation amount for X axis is not applied.

(Example)

| [Compensation amount] | | | | | X | Y | Z |
|---|---|---|---|---|---|---|---|
| T1103 | -> | Tool nose wear compensation No. | "03" | : | 0.01 | 0.02 | 0.03 |
| | | Tool length compensation No. | "11" | : | 0.1 | 0.2 | 0.3 |

[Program] [Machine coordinate value]

```
 (G111)                                  <X1>    <Y1>    <Z1>
    :
N10 T1103 ;
N20 G90 G00 X10.0 Y20.0 Z30.0 ;  ------>  10.11   20.22   30.33
    :
N30 T0 ;
N40 G00 X0 Y0 Z0 ;
    :
N50 G111 X Y ;
N60 T1103 ;
N70 G00 X10.0 Y20.0 Z30.0 ;      ------>  20.11   10.22   30.33
```

(8) For the machine specification whose absolute/incremental is switched by address, when the axis name switching is carried out, likewise the absolute address will be switched.

(Example)

| | Control X axis | Control Y axis |
|---|---|---|
| G111 ; | X , U , I | Y , V , J |
| G111 X Y ; | Y , V , J | X , U , I |

However, an address which does not affect the axis movement, such as X address of dwell, does not switch.

(Example)

```
G04 X2. ;
G111 X Y ;
G04 X2. ;     <- X address of dwell does not switch to the command by Y.
```

(9) When an axis for which the axis name switch is carried out is a constant surface speed axis, the constant surface speed axis will be switched automatically.
When "G96 P_" is commanded, the axis No. is that of after the axis name is switched.
When the P command is omitted, the constant surface speed axis will follow the parameter "#1181 G96_ax". However, when the constant surface speed control whose P command is omitted is commanded after the axis name is switched, the axis No., which is set by the parameter, becomes the axis No. after the axis name is switched.

(Example)

```
  :            <- Command "G96 P1" in this range -> X (X1) is the constant surface speed axis.
G111 X Y ;
  :            <- Command "G96 P1" in this range -> X (Y1) is the constant surface speed axis.
```

(10) The axis coordinate value and the tool length value which are read by variables are fixed regardless of the axis name switching.

Axis allocation by variables is not switched even during the axis name switching.

(Example)

```
                    <1>   <2>   <3>
#1013 axname        X     Y     Z
#1022 axname2       X1    Y1    Z1

G111 ;
N10 G00 X100. Z200. Y300. ;
N20 #500 = #5021 ;        ←   Machine position coordinate value (100.) of <X1> is substituted into #500.
N30 #501 = #5022 ;        ←   Machine position coordinate value (200.) of <Z1> is substituted into #501.
N40 #502 = #5023 ;        ←   Machine position coordinate value (300.) of <Y1> is substituted into #502.
N50 G111 X Y ;
N60 #504 = #5021 ;        ←   Machine position coordinate value (100.) of <X1> is substituted into #504.
N70 #505 = #5022 ;        ←   Machine position coordinate value (200.) of <Z1> is substituted into #505.
N80 #506 = #5023 ;        ←   Machine position coordinate value (300.) of <Y1> is substituted into #506.
```

## Program example

(Example)

```
G90 G00;
G111 X Y ;
G01 X100. ;        →  Y axis moves to 100.
G01 Y100. ;        →  X axis moves to 100.
G111 ;
G01 X0. ;          →  X axis moves to 0.
G01 Y0. ;          →  Y axis moves to 0.
```

## Relation with other functions

### Relation with fixed cycle

(1) Fixed cycle for drilling

Do not command the axis name switching during the fixed cycle for drilling.
If G111 is commanded during the fixed cycle for drilling, a program error (P411) will occur.

The following operation is carried out during the fixed cycle for drilling (longitudinal direction).
When "Longitudinal hole drilling axis selection" (YCD4) is turned ON, axis switching including Y axis becomes temporarily invalid during the fixed cycle for drilling (longitudinal direction) (G87, G88, G89, G88.1).
When the fixed cycle for drilling (longitudinal direction) is canceled, the switching becomes valid.
If the switching does not include Y axis, the switching is valid even during the fixed cycle for drilling (longitudinal direction).
"In axis name switch" signal will not turn OFF even when the switching is temporarily invalid.

(Ex.) Axis configuration X (1st axis), Z (2nd axis), Y (3rd axis), and C (4th axis)

```
G28 X Z Y C ;
G111 X Y ;
G87 R-5. X10. Z-30. Y-40. F1000 ;   ...  Switching X axis and Y axis becomes invalid during the fixed
Z-40 Y-50. ;                             cycle for drilling (longitudinal direction)
  :                                      X: 1st axis
  :                                      Z: 2nd axis
  :                                      Y: 3rd axis
G80 ;
G01 X15. Z25. Y35. ;                ...  Switching X axis and Y axis becomes valid after canceling
  :                                      the fixed cycle for drilling (longitudinal direction)
  :                                      X: 3rd axis
  :                                      Z: 2nd axis
  :                                      Y: 1st axis
```

(2) Fixed cycle for turning machining

If G111 is commanded during the fixed cycle for turning machining (G77, G78, G79), the fixed cycle is canceled.

(3) Compound type fixed cycle for turning machining

Do not command the axis name switching for the finished shape program designated with G71, G72 or G73 block.
If G111 is commanded to the finished shape program, a program error (P411) will occur.

### Relation with other functions

(1) Milling interpolation (G12.1/G13.1)

Do not command the axis name switching during the milling interpolation mode.
If G111 is commanded during the milling mode, a program error (P411) will occur.

(2) Constant surface speed control (G96, G97) (including clamp)

Do not command the axis name switching during the constant surface speed control mode.
If G111 is commanded during the constant surface speed control mode, a program error (P411) will occur.

(Example) Part system of axis No. (1) X, (2) Z, (3) Y and (4) C.

```
G96 S300 P1
G111 X Y
G01 U-30.
```

The constant surface speed control is possible after the axis name switching.

(3) Nose R compensation (G41/G42/G40), nose R compensation automatic direction identification (G46/G40)

Do not command the axis name switching during the nose R compensation mode.
If G111 is commanded during the nose R compensation mode, a program error (P411) will occur.

(4) Workpiece coordinate selection (6 sets) (G54 to G59), external workpiece coordinate offset

Coordinate system offset amount is applied to the axis which is specified by the parameter regardless of the axis name switching.

(5) Plane selection

Axis name switching command does not change the plane selection's modal.
It automatically selects the plane which corresponds to the modal command when G111 is commanded.

(6) NC reset (Reset 1/2, reset & rewind)

When NC is reset, the axis name switching is automatically canceled.

(7) Mixed control (Cross axis control)

Do not command the axis name switching during the mixed control (cross axis control) mode.
If G111 is commanded during the mixed control (cross axis control) mode, a program error (P411) will occur.
If the mixed control (cross axis control) is commanded during axis name switch, the error "M01 operation error 1035" will occur.

(8) Polar coordinate interpolation

Do not command the axis name switching during the polar coordinate interpolation mode.
If G111 is commanded during polar interpolation mode, a program error (P411) will occur.

(9) Cylindrical interpolation

Do not command the axis name switching during the cylindrical interpolation mode.
If G111 is commanded during the cylindrical interpolation mode, a program error (P411) will occur.

(10) Workpiece offset input (G10 L2)

Do not command the workpiece offset input during G111 modal.
If the workpiece offset input is commanded during G111 modal, a program error (P421) will occur.

(11) Tool compensation input (G10 L10)

Do not command the tool compensation input during G111 modal.
If the tool compensation input is commanded during G111 modal, a program error (P421) will occur.

(12) Tool nose wear compensation input (G10 L11)

Do not command the tool nose wear compensation input during G111 modal.
If the tool nose wear compensation input is commanded during G111 modal, a program error (P421) will occur.

(13) Workpiece coordinate offset amount setting (G10 L20)

Do not set the workpiece coordinate offset amount during G111 modal.
If the workpiece coordinate offset amount is set during G111 modal, a program error (P421) will occur.

(14) Programmable current limitation (G10 L14)

Do not command the programmable current limitation during G111 modal.
If the programmable current limitation is commanded during G111 modal, a program error (P421) will occur.

(15) Workpiece coordinate preset

This function presets the workpiece coordinate system shifted with the program command or manual operation to the workpiece coordinate system which is offset by the workpiece coordinate offset amount from the machine zero point by the program command (G92.1/G50.3).

(16) Start point designation synchronization

When the axis name switching is carried out at the other part system after start point designation synchronization is commanded, the part systems can be waited at the axis before switching.
Command start point designation synchronization after the axis name switching completed.

## Precautions

(1) Only two axes can be combined for the commanded axes when using the axis name switch command. A program error (P33) will occur if an axis or three or more axes are commanded.

(2) The settings such as the diameter value and radius value of the two axes used for axis name switch cannot be interchanged. Only the axis name is interchanged.

(3) Machining program, including the axis name switch, cannot perform program restart search.
If the axis name switch is commanded (G111) during the program restart search, a program error (P49) will occur.

(4) When address check is valid, do not command the axis name switch without the command value. Address check depends on the MTB specifications (parameter "#1227 aux11/bit4").
If the axis name switch is commanded without the command value, a program error (P33) will occur.

# 15.10 Mirror Image for Facing Tool Posts ; G68,G69

## Function and purpose

In a machine in which the base turret and facing turret are integrated, this function is used to cut with the facing turret cutter using a program created with the base turret side.

The distance between the two turrets is set in the parameters beforehand.

## Command format

### Mirror image for facing tool posts ON

```
G68 ;
```

### Mirror image for facing tool posts cancel

```
G69 ;
```

[T command mirror image for facing tool posts]

The mirror image for facing tool posts can be turned ON and OFF with the T command instead of the G68/G69 command.
The T command that validates or invalidates and executes a function depends on the MTB specifications (parameters shown below).

| # | Item | | Details | Setting range (unit) |
|---|---|---|---|---|
| 1119 | Tmiron | Select the T command mirror image for facing tool posts | Selects whether the mirror image for facing tool posts with the T command is valid or invalid. | 0: Invalid<br>1: Valid |
| 1203 | TmirS1 | Select turret as facing turret with T command | The turret selection for the T command mirror image for facing tool posts corresponding to tool No. 1 to 32 is set. | 0 to FFFFFFFF |
| 1204 | TmirS2 | Select turret as facing turret with T command | The turret selection for the T command mirror image for facing tool posts corresponding to tool No. 33 to 64 is set. | 0 to FFFFFFFF |

The operation is the same as for the mirror image for facing tool posts.

## Detailed description

When G68 is commanded, the following program coordinate system is shifted to the facing turret side of the axis for which the mirror image for facing tool posts is valid (hereafter unless noted in particular, the X axis will be described as the axis for which mirror image for facing tool posts is valid). The axis movement direction is reversed from the program command. When G69 is commanded, the following program coordinate system will be returned to the base turret side.

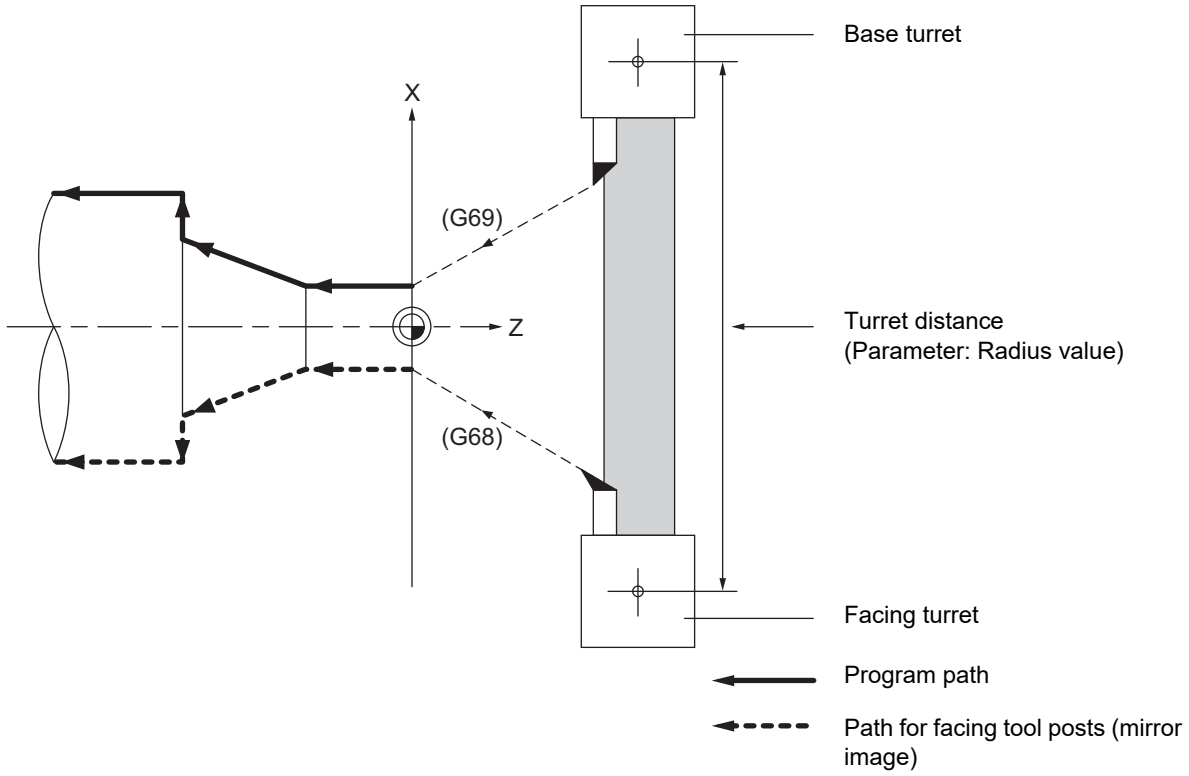


The axis with the mirror image for facing tool posts valid depends on the MTB specifications (parameter "#1273 ext09/bit4").

(1) When "#1273 ext09 bit4" = 0

The mirror image for facing tool posts is valid for the 1st axis in the part system.

(2) When "#1273 ext09 bit4" = 1

Mirror image for facing tool posts is valid for the axis determined in the following manner by the plane selected when mirror image for facing tool posts is selected. Note that even if the plane is changed during mirror image for facing tool posts, the axis for which mirror image for facing tool posts is valid will not change.

| Plane selection | Axis for which mirror image for facing tool posts is valid |
|---|---|
| G17 | J designated axis ("#1027 basic axis J" or "#1030 parallel axis J", which is an axis in plane configuration) |
| G18 | I designated axis ("#1026 basic axis I" or "#1029 parallel axis I", which is an axis in plane configuration) |
| G19 | K designated axis ("#1028 basic axis K" or "#1031 parallel axis K", which is an axis in plane configuration) |

### Absolute command/Incremental command

(1) Absolute command

The command position for the Z axis is reversed symmetrically, and the base turret moves to the position shifted by the distance between cutters.

```
T0101  ;
G00 X0. ;
G68 ;              Mirror image for facing tool posts ON
T0202  ;           Facing turret selection
G00 X10. Z0. ;
G01 Z-50. F400 ;
   X20. ;
```

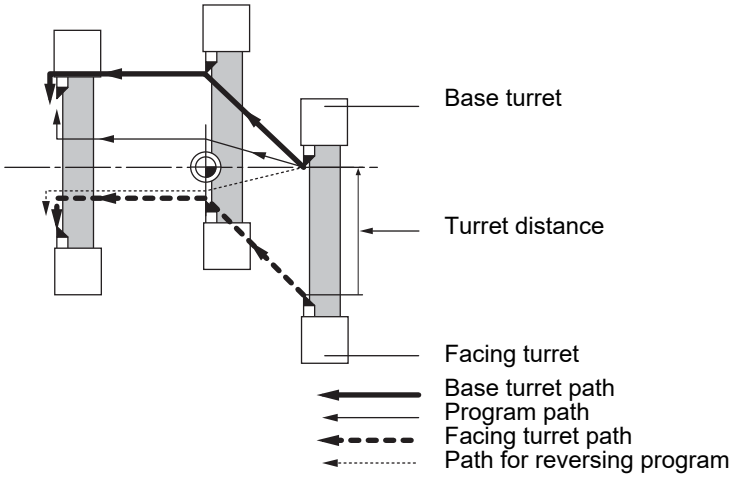


* This figure does not incorporate the tool length.

(2) Incremental command

The commanded X axis direction reverses, and the base turret moves.

```
T0101  ;
G00 X0. ;
G68 ;              Mirror image for facing tool posts ON
T0202  ;           Facing turret selection
G00 U10. W-30. ;
G01 W-50. F400 ;
   U10. ;
```

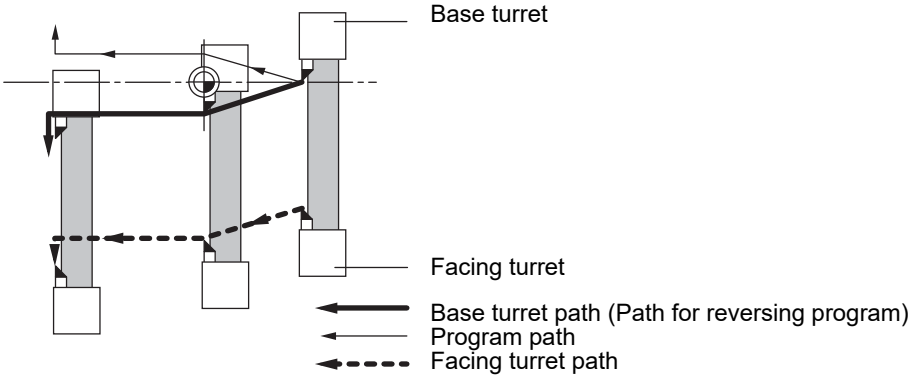


* This figure does not incorporate the tool length.

(3) Changing from an incremental command to an absolute command

After changing to the absolute command, the same operation as “(1) Absolute command” takes place.

```
T0101  ;
G00 X0. ;
G68 ;                Mirror image for facing tool posts ON
T0202  ;             Facing turret selection
G00 U10. W-30. ;
G01 W-50. F400 ;
   X20 Z-80. ;
```

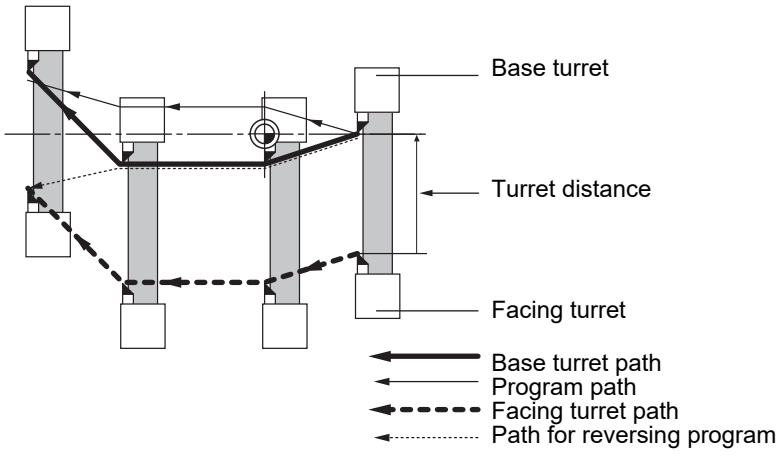


* This figure does not incorporate the tool length.

## Displaying the workpiece coordinate values

The indication of the workpiece coordinate value for the axis with the mirror image for facing tool posts valid depends on the MTB specifications (parameter "#1273 ext09/bit3").

| | #1273 ext09/bit3 = 0 | #1273 ext09/bit3 = 1 |
|---|---|---|
| Facing turret mirror image mode | The workpiece coordinate values are at the position where the program command value sign has been reversed, and increases/decreases in the same manner as the actual movement, that is, movement on the machine coordinate system.<br>(Indicates coordinate values for facing turret side.) | The workpiece coordinate values are the same as the program command value, and increases/decreases opposite the actual movement, that is, movement on the machine coordinate system. |
| At startup | Workpiece coordinate value = Workpiece coordinate value before mirror image for facing tool posts starts - distance between cutters (#1202 mirofs) | Workpiece coordinate value = {Workpiece coordinate value before mirror image for facing tool posts starts - distance between cutters (#1202 mirofs)} × (-1) |
| When movement is commanded while valid | Workpiece coordinate value = Workpiece coordinate value before movement + movement amount of machine coordinate | Workpiece coordinate value = Workpiece coordinate value before movement + movement amount of machine coordinate |
| When canceled | Workpiece coordinate value = Workpiece coordinate value before mirror image for facing tool posts is canceled - distance between cutters (#1202 mirofs) | Workpiece coordinate value = {Workpiece coordinate value before mirror image for facing tool posts is canceled × (-1)} + distance between cutters (#1202 mirofs) |

### Tool compensation of facing turret

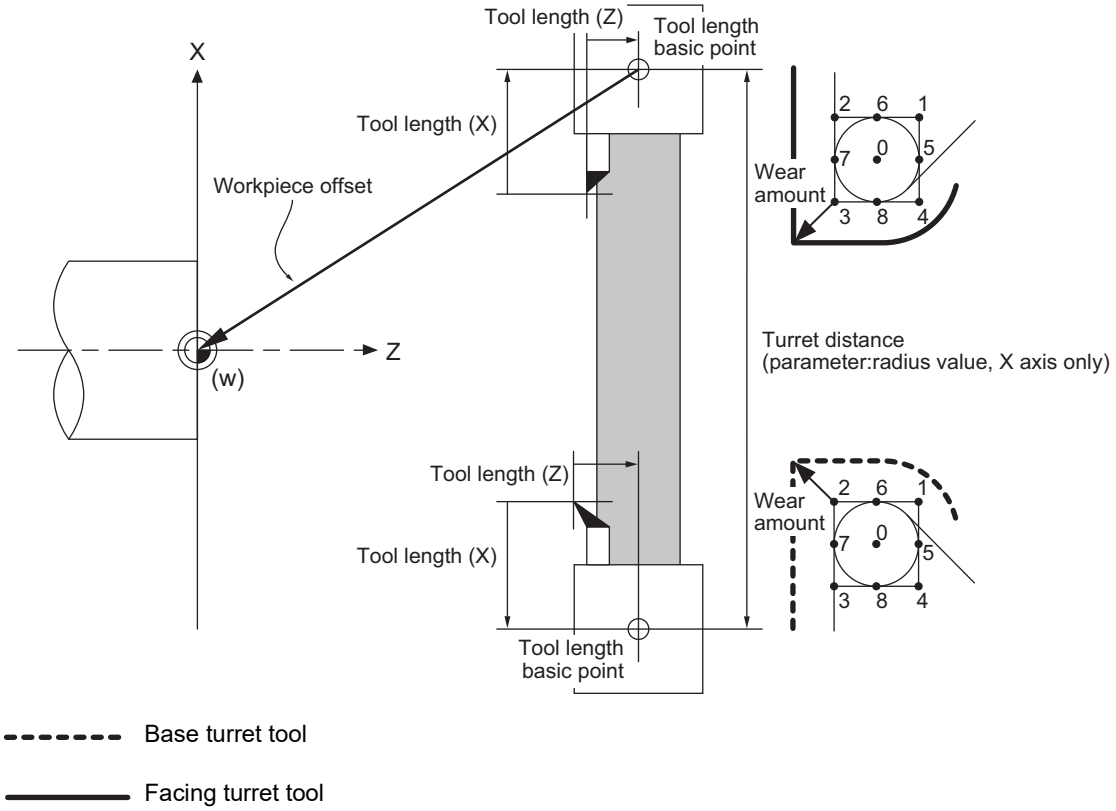


The original tool direction for the facing turret is shown in the drawing.

Whether the facing turret tool can be set to the same direction as the base turret tool depends on the MTB specifications (parameter "#1118 mirr_A").

(1) Tool length offset

The tool length offset amount is the length from the tool nose to the tool length basic point. This also applies for the facing turret. Note that the offset amount setting value differs according to the tool length basic point position as shown below.

Tool length basic point and tool length offset

| | Type A | Type B | Type C |
|---|---|---|---|
| Tool length basic point | Each turret basic point | Base turret basic point | Workpiece face center |
| Workpiece coordinate zero point (w) | Workpiece face center | Workpiece face center | Workpiece face center |
| Turret distance | Distance between basic points of both turrets (radius value) | 0 | 0 |
| Workpiece offset (b) | Workpiece coordinate zero point - base turret tool length basic point | Workpiece coordinate zero point - base turret tool length basic point | 0 |
| Tool length (a) | Tool length basic point - tool nose position | Tool length basic point - tool nose position | Tool length basic point - tool nose position |
| Outline drawing Upper: Base turret Lower: Facing turret | 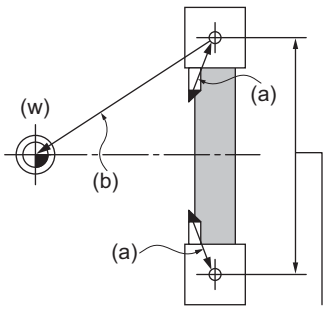  | 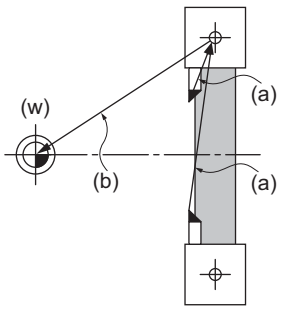  | 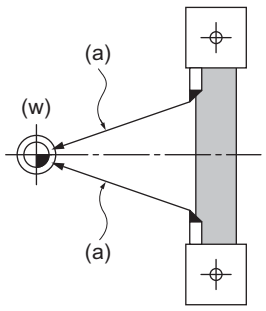  |

The outline drawing in the table above shows the case when "#1118 mirr_A" is set to 0. When "#1118 mirr_A" is set to 1, the sign of the X axis tool length compensation amount for the facing turret will be reversed.

(2) Tool Nose Wear Compensation

The tool nose wear compensation amount is the length from the current tool nose to the original tool nose. The original tool nose is the tool nose when the tool length offset value was set.

| | |
|---|---|
| 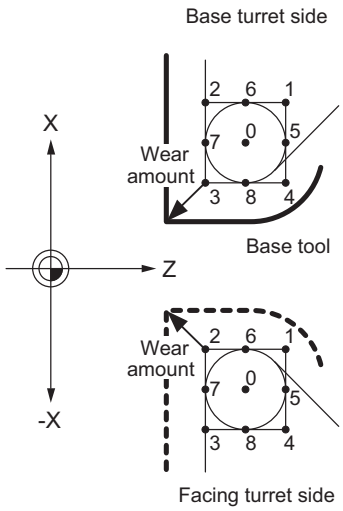  | The drawing shows the case when "#1118 mirr_A" is set to 0. When "#1118 mirr_A" is set to 1, the sign of the X axis tool nose wear compensation amount for the facing turret will be reversed. |

(3) Tool nose point with nose R compensation

The tool nose point with nose R compensation is as follows.
Note that if the selected plane differs from when the mirror image for facing tool posts was started, this will be handled as "#1118 mirr_A" = 0 even if it is "#1118 mirr_A" = 1.

| #1118 mirr_A = 0 | #1118 mirr_A = 1 |
|---|---|
| 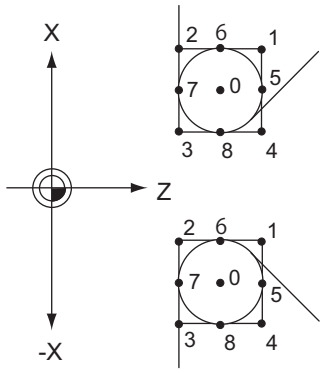 | 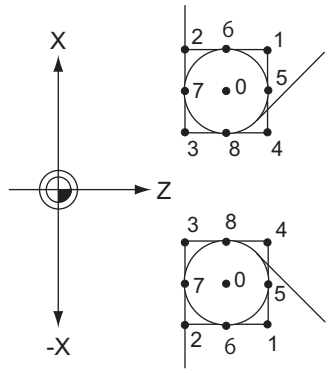 |



Upper: Base turret

Lower: Facing turret

(4) Examples of setting the tool offset

| | Type A | | | | Type B | | | | Type C | | | |
|---|---|---|---|---|---|---|---|---|---|---|---|---|
| | mirr_A = 0 | | mirr_A = 1 | | mirr_A = 0 | | mirr_A = 1 | | mirr_A = 0 | | mirr_A = 1 | |
| | X | Z | X | Z | X | Z | X | Z | X | Z | X | Z |
| Workpiece offset | -100. | -150. | -100. | -150. | -100. | -150. | -100. | -150. | 0. | 0. | 0. | 0. |
| Turret distance (Setting value) | 100. | | 100. | | 0. | | 0. | | 0. | | 0. | |
| Base turret tool length | 40. | 20. | 40. | 20. | 40. | 20. | 40. | 20. | 40. | 20. | 40. | 20. |
| Base turret tool wear amount | -4. | -2. | -4. | -2. | -4. | -2. | -4. | -2. | -4. | -2. | -4. | -2. |
| Base turret nose point | 3 | | 3 | | 3 | | 3 | | 3 | | 3 | |
| Facing turret tool length | -30. | 10. | 30. | 10. | 170. | 10. | -170. | 10. | 70. | -140. | -70. | -140. |
| Facing turret tool wear amount | 2. | -1. | -2. | -1. | 2. | -1. | -2. | -1. | 2. | -1. | -2. | -1. |
| Facing turret nose point | 2 | | 3 | | 2 | | 3 | | 2 | | 3 | |

### Program example

| | | |
|---|---|---|
| T0101 ;<br>G00 X10. Z0. ;<br>G01 Z-40. F400 ;<br>X20. ; | Base turret selection | Machining with base turret ("A" in the figure below) |
| G68 ;<br>T0202 ;<br>G00 X20. Z-40. ;<br>G01 Z-80. F200 ;<br>X30. ; | Mirror image for facing tool posts ON<br>Facing turret selection | Machining with facing turret ("B" in the figure below) |
| G69 ;<br>T0101 ;<br>G00 X30. Z-80. ;<br>G01 Z-120. F400 ; | Mirror image for facing tool posts Cancel<br>Base turret selection | Machining with base turret ("C" in the figure below) |

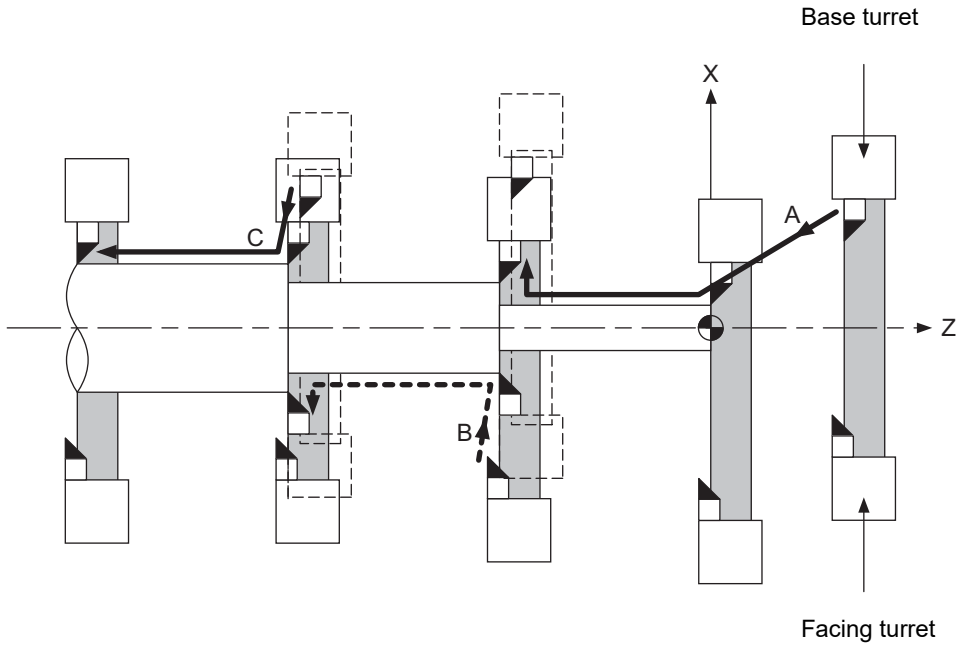

## Relation with other functions

### Reference position return (G28, G30)

Mirror image for facing tool posts will remain valid when moving to the intermediate point.
Mirror image for facing tool posts will be invalidated when moving past the intermediate point and during movement that ignores the intermediate point.
Mirror image for facing tool posts will be validated from the next block.

### Machine coordinate system selection (G53)

Mirror image for facing tool posts will be invalidated during the movement.
Mirror image for facing tool posts will be validated from the next block.

### Coordinate system setting (G92)

The following will take place on the axis for which mirror image for facing tool posts is valid.

| Parameter | | Details |
|---|---|---|
| #1273 ext09/bit3 | 0 | The "command value × (-1)" coordinate system will be set as the coordinate system on the facing turret side. |
| | 1 | The commanded coordinate system will be set as the coordinate system on the facing turret side. |

### Reading the coordinate position with variables

The following will take place on the axis for which mirror image for facing tool posts is valid.

(1) When previous block is end point coordinate system (#5001, etc.)
The "end point coordinate values on the base turret side in the workpiece coordinate system" will be read in.
(2) For machine coordinate values (#5021, etc.)
The "coordinate values on the base turret side in the machine workpiece system" will be read in.
(3) For machine coordinate values (#5041, etc.)
The "workpiece coordinate value in the mirror image for facing tool posts" will be read in.
(4) For skip coordinate values (#5061, etc.)
If mirror image for facing tool posts is valid when skip is executed, the "workpiece coordinate values in the mirror image for facing tool posts" will be read in.

### Resetting

(1) When parameter "#1210 RstGmd/bit14" = 0
The mirror image for facing tool posts will be canceled by reset.
(2) When parameter "#1210 RstGmd/bit14" = 1
The mirror image for facing tool posts state will be maintained even if it is reset.

### External mirror image, parameter mirror image

(1) A program error (P371) will occur if mirror image for facing tool posts is applied on the axis during external mirror image or parameter mirror image.
(2) The operation error (M01 1036) alarm will occur if external mirror image or parameter mirror image is applied on the axis during the mirror image for facing tool posts.

**Manual interruption**

(1) When manual absolute is OFF

If manual interruption is applied on an axis for which mirror image for facing tool posts is valid, the mirror image will not be applied on the interrupt amount. The interrupt movement amount will not be added to the workpiece coordinate values.

(2) When manual absolute is ON

If manual interruption is applied on an axis for which mirror image for facing tool posts is valid, the mirror image will not be applied on the interrupt amount. The interrupt movement amount will be added to the workpiece coordinate values.

## Precautions

(1) The balance cut command (G68, G69) cannot be issued when the mirror image for facing tool posts specification is valid in the G code list 6 or 7. The G code list setting depends on the MTB specifications (parameter "#1037 cmdtyp").

(2) If mirror image for facing tool posts is turned ON for an axis in a part system having axes that are exchanged with complex control or in a part system to which the axis control is transferred, an operation error (M01 1035) will occur.
Note that mirror image for facing tool posts can be started after the axis is exchanged with complex control.

(3) A program error (P486) will occur if polar coordinate interpolation, cylindrical interpolation or milling interpolation is commanded while mirror image for facing tool posts is ON.

(4) A program error (P612) will occur if mirror image for facing tool posts is turned ON while the axis is moving with exponential interpolation.

(5) A program error (P371) will occur if the axis to which mirror image for facing tool posts is commanded is a rotation axis.

# 15.11 Interactive Cycle Insertion; G180

## 15.11.1 Interactive Cycle Insertion

### Function and purpose

The machining and setup support cycles can be interactively inserted to a program which is opened on the edit screen.
Using this function leads the programming time to be shortened.
The cycle can be easily inserted by editing the data on the interactive window.
The block of the cycle once inserted to the program can be directly edited in the edit screen. As long as the cycle format is not changed, the program can be reedited in the cycle edit window.

### Command format

| |
|---|
| **G180 P__ A__ ;** |

| | |
|---|---|
| P | Cycle information identification No.<br>1: Cycle header<br>0: Cycle footer<br>11: Arbitrary shape header<br>10: Arbitrary shape footer<br>31: Hole position header<br>30: Hole position footer |
| A | Cycle ID (Only when the cycle information identification No. is set to "1") |

Blocks between cycle header block (G180 P1) and cycle footer block (G180 P0) are handled as blocks of interactive cycle insertion.
G180 is a G code in group 0, and an unmodal command.

## Detailed description

Program format of cycle inserted with this function is indicated as follows:

Cycle edit window

Edit the cycle data interactively and output to the program.

Program being edited on the edit screen

```
T_;
G00 X_ Z_;
G180 P1 A10201 (CONT-FACE);   <- (1) Cycle header
S_ M_;
G00 X_ Y_ Z_;                 <- Move to machining start position
G17;
G12.1;                        <- Processing before machining
M8;
G65 P<CONTOUR> A_ B_ F_;      <- Processing
WHILE[ ] DO_;
G00 X_ Y_ Z_;
G01 Z_ F_;
WHILE[ ] DO_;
F_;
G180 P11;                     <- (2) Arbitrary shape header
G01 X_ Y_;
G01 X_ Y_;
G02 X_ Y_ R_;                 <- Arbitrary shape block
  :
G01 X_ Y_;
G180 P10;                     <- (3) Arbitrary shape footer
END_;
END_;
G00 Z_;
G13.1;                        <- Processing after machining
M9;
G00 Z_;                       <- Move to machining end position
G180 P0;                      <- (4) Cycle footer
G00 Z_;
```

Cycle

| No. | Process part | Description | Program image |
|---|---|---|---|
| (1) | Cycle header | Block that indicates the cycle starting.<br>Header includes cycle ID (8-digit number) and cycle name.<br><Cycle ID><br>Used to identify the cycle type at the time of cycle reediting.<br><Cycle name><br>Used to show cycle name in the monitor screen or check screen. | G180 P1 A_ (cycle name);<br>A: Cycle ID |
| (2) | Arbitrary shape header | The header that indicates the start of the arbitrary shape is output before an arbitrary shape block. | G180 P11; |
| (3) | Arbitrary shape footer | The footer that indicates the end of the arbitrary shape is output at the end of an arbitrary shape block. | G180 P10; |

| No. | Process part | Description | Program image |
|---|---|---|---|
| (4) | Cycle footer | The footer that indicates the end of the cycle is output at the end of the cycle. | G180 P0; |
| - | Hole position header | The header that indicates the start of the hole position is output before the block to specify the hole position. | G180 P31; |
| - | Hole position footer | The footer that indicates the end of the hole position is output after the block to specify the hole position. | G180 P30; |

### Note

(1) The program block output between header and footer differs for each cycle.

(2) G180 block does not perform since it is the block to identify the cycle information. The operation is same as the block which only has EOB (;). The operation will also be the same when specified other than cycle information identification No. designated by format (G180 P99 etc.).
When the specifications of interactive cycle insertion are invalid, it will result the program error (P39) at the G180 block.

(3) Since G code of G180 is inserted automatically, manual input is not required.

## 15.11.2 Interactive Macro

### Function and purpose

Interactive macro means a macro program used for interactive cycle insertion. It is stored in the dedicated area. The command format is the same as when an interactive cycle is inserted. Refer to "15.11.1 Interactive Cycle Insertion".

### Detailed description

A macro call command during a cycle inserted by this function calls the interactive macro stored in the interactive macro area.
You cannot edit the interactive macros which are stored in this area.
However, if you set "1" to "#8133 Intrctv macro call", a machining program in the machining program area can be called as a macro program. You can newly create and edit the program because it is in the machining program area. When you want programs to be operated differently from the standard interactive macro, you can edit and call them there.

| Parameters | | Program area | Program display | ONB display | Buffer correction |
|---|---|---|---|---|---|
| #8133 | 0 | Interactive macro area | Hide | Hide | Disabled |
| | 1 | Machining program area (*1) | Show | Show | Enabled |
| | | Interactive macro area (*2) | Hide | Hide | Disabled |

(*1) When a program with the same name as standard interactive macro exists in the machining program area, the program in the machining program area is called first.

(*2) When a program with the same name as a standard interactive macro does not exist in the machining program area, the program in the interactive macro area is called.

### Precautions and restrictions

(1) Do not change the name of macro program for macro call command. If you change the name to other than standard interactive macro program name, the program error (P232) occurs.
When you change it to the standard interactive macro program name, you can call the interactive macro program which has the name you have changed; however, the cycle cannot be reedited.

(2) Do not add macro call (G65) or subprogram call (M98) during the cycles (G180P1 to G180P0). If you add the macro call other than the standard interactive macro programs, the program error (P232) occurs.
When adding with the standard interactive macro program name, you can call the interactive macro you have added; however, the cycle cannot be reedited if you insert a block.

(3) Do not add the "macro interruption command (M96/M97)" during the cycles (G180P1 to G180P0). If you add, the program error (P232) occurs to call the macro in the interactive macro area. Once "1" is set to the parameter "#8133 Intrctv macro call", a macro program or subprogram in the machining program area can be called even during a cycle; however, the cycle cannot be reedited if a block is inserted.

(4) Subprogram and macro program call nesting levels include interactive macros. The maximum nesting level in which a macro program or subprogram can be called depends on your CNC specifications.

(5) For the programs inserted cycles using this function, if modifications that do not conform to the cycle format have been made manually, data may not be read properly at the time of reedit. In that case, even if the menu "Reedit" is pressed in the cycle list window, an error occurs, and the cycle cannot be reedited.

(6) G180 block does not perform anything. Therefore, even if G180 block is added to the program manually, the error does not occur, and it handled as the same operation as the block only EOB (;).

(7) In this function, saving cycles to the program is possible even if cycle data is unset state. The setting values of unset items are output as "0" or "?". If the program output "?" is operated, the program error (P33) occurs at the block which unset data is output.

(8) Only the machining program, which contains the cycle of the type designated in the parameter "#8992 Cycle switch", is operable. If the machining program containing a different type of cycle is operated, a program error (P232) occurs in the block.

# 15.12 Axis Name Extension

## Function and purpose

The axis name (command axis name) used for giving the absolute/incremental command to NC control axis can be expanded to two characters. When this function is invalid, the command axis name (#1013 axname) is set with one character from A, B, C, U, V, W, X, Y or Z, therefore the number of axes is limited if the increment command axis name is used (*1).
When this function is valid, the incremental axis name can be used for all axes by this function.
The name-extended axis cannot be designated in the parameter which sets the command axis name such as plane configuration axis I, J or K (*2). Thus, apply this function to a miscellaneous axis which is not used for machining (cutting).

(*1) When two alphabetical characters are used per axis.

(*2) This indicates the axis names of I, J or K set by the parameters "#1026 base_I" to "#1028 base_K".

[Use example]

<Axis name setting>

The settings of these parameters depend on the MTB specifications.

| # | Item | | 1st axis | 2nd axis | 3rd axis | 4th axis | 5th axis | 6th axis | 7th axis |
|---|---|---|---|---|---|---|---|---|---|
| 1013 | axname | Axis name | X | Z | C | X | Z | X | Z |
| 1014 | incax | Incremental command axis name | U | W | H (*3) | U | W | U | W |
| 1601 | axnameEx | Axis name extension character | None | None | None | A | A | B | B |
| Absolute command axis name | | | X | Z | C | XA | ZA | XB | ZB |
| Incremental command axis name | | | U | W | H | UA | WA | UB | WB |

(*3) "H" can be set to "incax".

<Axis configuration>

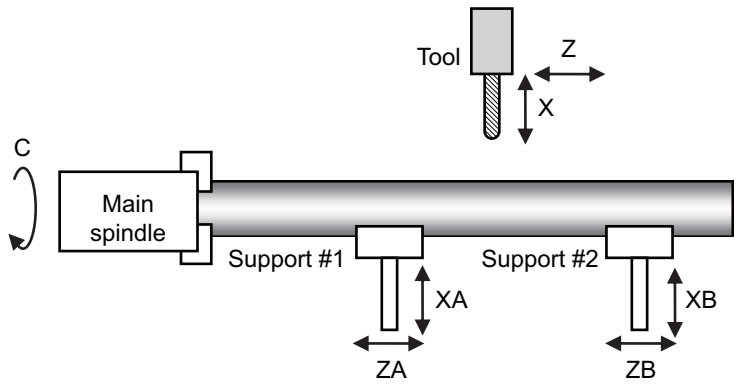


## Term

The following descriptions are the meanings of the terms used in this manual.

| Term | Meaning |
|---|---|
| Name-extended axis | Axis of which the command axis name is specified with two characters by this function |
| Name-unextended axis | Axis of which the command axis name is specified with a single character (the axis where this function is not used) |
| Axis name extension character | 2nd character of the name-extended axis |

### Enabling conditions

In order to use this function, validate this function by the parameter and set the second character of the name-extended axis.
These parameters depend on the MTB specifications (parameters "#1266 ext02/bit0" and "#1601 axnameEx").

## Detailed description

### Program commands for axis name extension

(1) Relationship between parameter setting and command axis name

Relationship between parameter related to axis name and command axis name is as follows: When the first character is not set, the program command cannot be issued to that axis.

[Parameter configuration example]

| # | Item | | 1st axis | 2nd axis | 3rd axis | 4th axis |
|---|---|---|---|---|---|---|
| 1013 | axname | Axis name (*1) | X | Z | Z | Y |
| 1014 | incax | Incremental command axis name (*1) | U | W | None | V |
| 1601 | axnameEx | Axis name extension character (*2) | A | A | B | None |
| Absolute command axis name | | | XA | ZA | ZB | Y |
| Incremental command axis name (*3) | | | UA | WA | None | V |

(*1) This sets the first character of the axis name.

(*2) This sets the second character of the axis name.

(*3) This depends on the MTB specifications (available when the parameter "#1076 AbsInc" is set to "1").

(2) Program commands to name-extended axis

When the axis name of the name-extended axis is "XA", the program command format to the name-extended axis is as follows. When "X" and "XA" exist in the command axis name in the part system, "XA10000" in the command code example below is not interpreted as "X0 A10000" because "XA" is judged preferentially.

| Type of command | Command code example |
|---|---|
| Numerical command | XA10000; |
| Decimal point command | XA12.345; |
| Variable command | XA[#100]; |

### Relationship with axis name setting parameters

Name-extended axis cannot be designated because only one letter can be set to the user parameter which sets axis name shown below. Thus, apply axis name extension to miscellaneous axis which is not used for machining (cutting).

| # | Item | Description |
|---|---|---|
| 1026 | base_I | Name of base axis configuring plane (*1) |
| 1027 | base_J | |
| 1028 | base_K | |
| 1029 | aux_I | Name of axis parallel to "base_I" |
| 1030 | aux_J | Name of axis parallel to "base_J" |
| 1031 | aux_K | Name of axis parallel to "base_K" |
| 8317 | - | Name of delivery axis when the right chuck and tailstock barrier is movable. |
| 8621 | - | Axis name of the plane (horizontal axis) for coordinate rotation control |
| 8622 | - | Axis name of the plane (vertical axis) for coordinate rotation control |

(*1) Name-extended axis cannot be designated for parameters "#1026 base_I" to "#1028 base_K" (base axes I, J, and K); however, the NC operates as follows depending on the current setting of base axis I, J, or K:

(a) When the setting value of the base axis I, J, or K corresponds to any name-unextended axis in the part system, the corresponded axis is identified as base axis I, J, or K.

(b) When the NC is operated with the setting value of the base axis I, J, or K as follows, the program error (P11) occurs.

- It does not correspond with any of the name-unextended axes in the part system.
- It corresponds with the first character of any of the name-extended axis.

(c) When the base axis I, J, or K is not set or in the following state, they are set as shown in the table below:

- It does not correspond with any of the name-unextended axes in the part system.
- It does not correspond with the first character of any of the name-extended axis.

| Parameter of base axis I, J, or K | Which axis "# 1013 axname" is used for the base axes I, J, and K? | |
|---|---|---|
| | L system | M system |
| #1026 base_I | 1st axis | 1st axis |
| #1027 base_J | 3rd axis | 2nd axis |
| #1028 base_K | 2nd axis | 3rd axis |

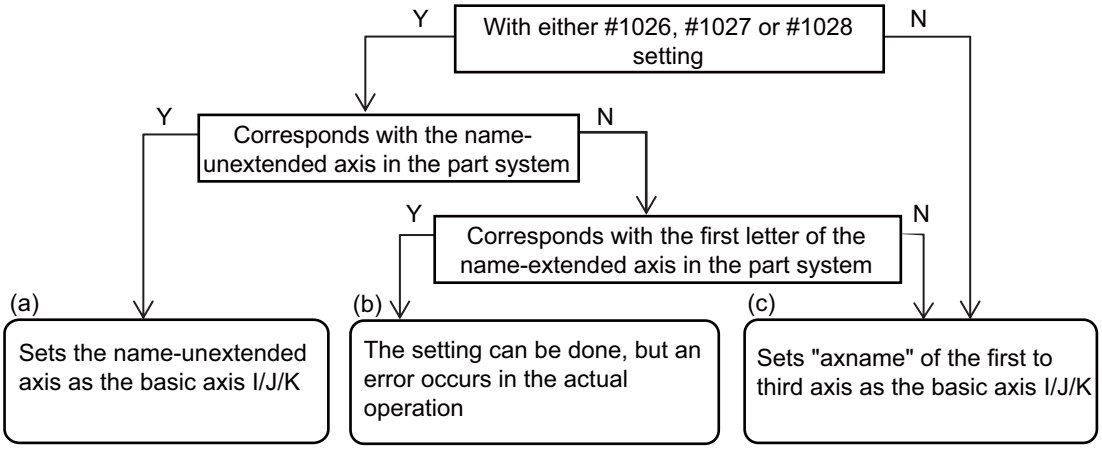


## Relationship with arbitrary axis exchange control

Because in the environment where the arbitrary axis exchange control is available, only the name of name-unextended axis can be designated in the parameters "#12071 adr_abs[1]" to "#12078 adr_abs[8]", other axes cannot be assigned to the command axis name of name-extended axis. However, regardless of the setting of these parameters, you can designate the axis name of name-extended axis or use the name-extended axis as target axis for axis exchange. (For the name-unextended axis, the axis name cannot be designated without setting these parameters.)

(1) to (3) show the examples of command code in the case of the following axis configuration.

[Example of axis configuration]

| $1 | 1st axis | 2nd axis | 3rd axis | 4th axis |
|---|---|---|---|---|
| #1013 axname | X | Z | X | Z |
| #1022 axname2 | X1 | Z1 | X9 | Z9 |
| #1601 axnameEx | - | - | A | A |
| Command axis name | X | Z | XA | ZA |

(1) Other axes cannot be assigned to the command axis name of name-extended axis.

| | |
|---|---|
| G140 XA=X1; | Program error (P33) |

(2) Name-extended axis can be used as the target axis for axis exchange.

| | |
|---|---|
| G140 X=X1 Z=Z9; | Assign "Z9 axis" to the command address Z. |

To return the command address to "ZA", carry out the axis exchange return with G141 or G142.

(3) You can command a name of name-extended axis regardless of G140 command.

| | |
|---|---|
| G140 X=X1 Z=Z1;<br>G00 X10. XA15.; | Both X1 and X9 axes move to the commanded coordinate. |

### G codes which can use name-extended axis

The following list shows the G codes whose functions are available for the name-extended axis among the G codes using an axis name as argument. Also, the operations when the name-extended axis is commanded in the same block or in the G-code mode are shown.

(1) List of G codes that can be used for the name-extended axis (L system)

| G code (G code list: 3) | Group | G code function | Operation when the name-extended axis is commanded in the same block or in the G-code mode |
|---|---|---|---|
| G00 | 1 | Positioning | Move to the commanded coordinates |
| G01 | 1 | Linear interpolation | Move to the commanded coordinates |
| G09 | 0 | Exact stop check | Move to the commanded coordinates |
| G28 | 0 | Automatic reference position return | Reference position return |
| G30 | 0 | 2nd, 3rd and 4th reference position return | Return to 2nd, 3rd and 4th reference positions |
| G53 | 0 | Basic machine coordinate system selection | Move to the commanded machine coordinates |
| G54 | 12 | Workpiece coordinate system selection 1 | Move to the commanded coordinates on G54 |
| G55 | 12 | Workpiece coordinate system selection 2 | Move to the commanded coordinates on G55 |
| G56 | 12 | Workpiece coordinate system selection 3 | Move to the commanded coordinates on G56 |
| G57 | 12 | Workpiece coordinate system selection 4 | Move to the commanded coordinates on G57 |
| G58 | 12 | Workpiece coordinate system selection 5 | Move to the commanded coordinates on G58 |
| G59 | 12 | Workpiece coordinate system selection 6 | Move to the commanded coordinates on G59 |
| G54.1 | 12 | Extended workpiece coordinate system selection | Move to the commanded coordinates on G54.1Pn |
| G61 | 13 | Exact stop check mode | Move to the commanded coordinates |
| G160 | 0 | Torque limitation skip | Move to the commanded coordinates |

## Relationship with other functions

### Relationship with data input by program

(1) G10 command in the machining program

Data input can be performed to the commands which designate the data input target axis by the axis number; however, it cannot be performed to the commands which designate by the axis name. When the name-extended axis is designated, the program error (P33) occurs.

(a) Commands to which the data input of name-extended axis is disabled (when designating by axis number)

(b) Commands to which the data input of name-extended axis is disabled (when designating by axis name)

(c) Command where input data is not per axis (when the axis is not designated)

| (a) | | (b) | | (c) | |
|---|---|---|---|---|---|
| G10 L70 | Parameters | G10 L2 | Workpiece offset | G10 L100 | Tool shape for 3D check |
| | | G10 L20 | Extended workpiece offset | G10 L10 | Tool length shape compensation (*2) |
| | | G10 L10 | Tool length shape compensation (*1) | G10 L11 | Tool length wear compensation (*2) |
| | | G10 L11 | Tool length wear compensation (*1) | G10 L12 | Tool radius shape compensation |
| | | G10 L14 | Current limit | G10 L13 | Tool radius wear compensation |
| | | | | G10 L3 | Tool life management |
| | | | | G10 L30 | Tool life management |
| | | | | G10 I_J_K_ | Coordinate Rotation Parameter |

(*1) Lathe system

(*2) Machining center system

(2) G10 command in input/output file

The input/output can be performed for the workpiece offset (G10 L2/L20) and L system tool offset (G10 L10/L11) by G10 command written in the file (WORK.OFS, TOOL.OFS), and the data input/output for the name-extended axis can be performed by G10 command in this case.
The example shows the relationship between the NC internal data and the file contents in the case of the following axis configuration:

[Example of axis configuration]

| $1 | 1st axis | 2nd axis | 3rd axis | 4th axis |
|---|---|---|---|---|
| #1013 axname | X | Z | X | Z |
| #1022 axname2 | X1 | Z1 | X9 | Z9 |
| #1601 axnameEx | - | - | A | A |
| Command axis name | X | Z | XA | ZA |

[Workpiece offset file (WORK.OFS)]

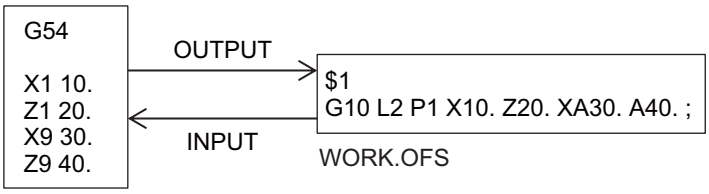


[Tool offset file (TOOL.OFS)]

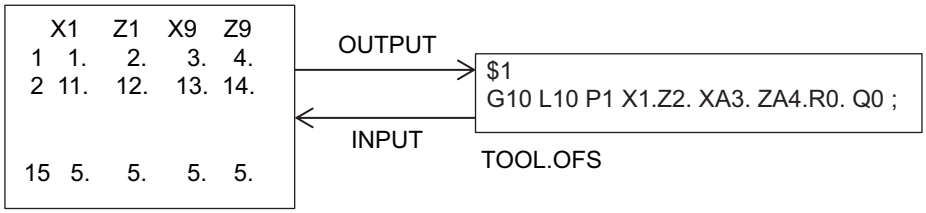


R address: Tool nose radius compensation amount

Q address: Tool nose point P number

## Precautions

(1) When the second axis name parameter "#1022 axname2" is not set, the command axis name is set automatically at the time of power ON.

| | |
|---|---|
| Name-extended axis | The axis names after the extension (1st character: "#1013 axname", 2nd character: "#1601 axnameEx") is set. |
| Name-unextended axis | The axis name set in "#1013 axname" is set. |

(2) When judging a character string described in the machining program, and if the result after analyzing the character string from the top is a reserved word (*1) of the user macro, it is identified as reserved word. When the character string is not the reserved word, it is identified as an axis name, but the name of the name-extended axis is identified preferentially. When the axis name and the reserved word are written in a row, enclose the macro command in "[ ]" and do not omit the axis command value "0" so that it does not become an unintentional command.

(*1) Reserved word here indicates as follows:

- Available functions during program mode (such as ABS and SIN)
- Control statement (such as IF and WHILE)
- Comparison operator (such as EQ and LT)

[Case in which the following axis names exist]

| Axis names | Run command | Operation |
|---|---|---|
| AB | #100 = ABS[#101]; | Set to the ABS command of a macro.<br>(This is not regarded as "#100 = AB0 S[#101];".) |
| AB, XA | XA[ABS[#100]]; | The ABS command result of a macro is used as the command value of the XA axis. |
| | XAABS[#100]; | Same as above<br>(This is not regarded as "XA0 AB0 S[#100];".) |
| X, XA | XABS[#100]; | This is regarded as "XA0 B0 S[#100];". (If the B axis does not exist, a program error (P32) will occur.)<br>When you want to use the ABS command result of a macro as the command value of the X axis, describe "X[ABS[#100]];". |
| AX | ,AX100.; | This is regarded as ",A0 X100.;". (*) |

(*) When the name of name-extended axis is written following comma ",", the command address with comma is identified preferentially.

(3) In the following cases, the program error (P11) occurs because the axis names are duplicated:
- When the name "#1013 axname" of name-unextended axis in the part system is duplicated
  When "#1076 AbsInc" = "1", the duplication check is performed including the increment command axis name "#1014 incax".
- When the name of name-extended axis in the part system (1st letter: "#1013 axname", 2nd letter: "#1601 axnameEx") is duplicated
  When "#1076 AbsInc" = "1", the duplication check is performed including the increment command axis name (1st character: "#1014 incax", 2nd character: "#1601 axnameEx").

(4) When the name-unextended axis is configured following the name-extended axis in the part system, the system error (Z23) occurs at the time of power ON.

| $1 | Normal axis configuration | | | | Abnormal axis configuration (System error (Z23) occurs.) | | | |
|---|---|---|---|---|---|---|---|---|
| | 1st axis | 2nd axis | 3rd axis | 4th axis | 1st axis | 2nd axis | 3rd axis | 4th axis |
| #1013 axname | X | Z | X | Z | X | X | Z | Z |
| #1601 axnameEx | - | R | A | A | - | A | - | A |
| Command axis name | X | Z | XA | ZA | X | XA (*) | Z | ZA |

(*) This is incorrect axis configuration because XA axis is set before Z axis.

(5) You cannot input "#1601 axnameEx" by the parameter input by program (G10 L70). When designated, the program error (P421) occurs.

(6) If the parameter "#1266 ext02/bit0" (Axis name extension valid) is set to "0" (invalid) and the program using the "Name-extended axis" is executed as it is, the machine may operate differently from the original command. For example, the command "XA10.000" for the "Name-extended axis" may be interpreted as "X0 A10.000". To prevent such misinterpretation in commands, it is recommended to use the parameter "#1227 aux11/bit4" as "1" (valid).

# 15.13 Program Format Switch; G188/G189

## Function and purpose

Program format switch is a function designed to switch the program format (G code system) using G codes or PLC signal. While the program format switch mode is active, the control runs a program based on the switched G code system. When you run a lathe-based multi-tasking machine, and if you change the G code system to that of the machining center system, you can use a free-curved surface machining program made with CAM without modifying the program.
Hereinafter, "Machining center system" is referred to as "M system", and "Lathe system" as "L system".

[Case in which the parameter "#1037 cmdtyp" is set to "3" (G code system 2)]

| | |
|---|---|
| O1<br>: | L system<br>(G code system 2 (#1037 = 3)) |
| G188; | Program format switch enable |
| G90 G00 X20. Z200.;<br>G91 G01 X30. Z180. F100;<br>: | M system<br>(G code system 1 (#1037 = 2)) |
| G189; | Program format switch cancel |
| : | L system<br>(G code system 2 (#1037 = 3)) |

G code method and PLC I/F method are different for the following points.

| | |
|---|---|
| G code method | The format is switched with the G188 or G189 command during automatic operation.<br>(e.g. to switch the format dynamically for some machining processes) |
| PLC I/F method | The format is switched with the PLC signal in mode other than automatic operation. The operation of the PLC signal depends on the MTB specifications.<br>(e.g. to enable the switched state at the time of power ON) |

This section describes the method of executing with G commands.

### Enabling conditions of the function

This function is enabled when all the conditions shown below are satisfied, but they depend on the MTB specifications.

(1) The specification of this function is valid.

(2) The parameter ("#1254 set26/bit1") that enables this function is designated.

## Command format

The part system in which these G commands are to be executed depends on the MTB specifications (parameter "#1047 G_Chg_En_Sno").

### Program format switch ON

| | |
|---|---|
| **G188;** | **Switches to the G code system in the M system.**<br>**(G code system 1 (However, parameter "#1037 cmdtyp" = 2))** |

### Program format switch cancel

| | |
|---|---|
| **G189;** | **Returns to the G code system in the L system.**<br>**(G code system determined by "#1037 cmdtyp")** |

## Detailed description

### Interaction between G Code and PLC I/F methods

There are two methods to switch the program format: G code method (G188/G189) and PLC I/F method (ON/OFF of PFCHR). After you have switched the program format using one of the methods, you can cancel the format switch using another method. Also, after you have canceled the program format switch using one method, you can execute it using another method.
During automatic operation, the PLC signal that indicates the switching status is dynamically changed by the G188 or G189 command. After automatic operation has been completed, the switching status is changed according to the status of the switch request signal regardless of the status at the end of automatic operation.
The G group 24 modal state is refreshed only during automatic operation.

**Note**

(1) Once the program format switch (G188) command is issued, the same G188 command is ignored if issued next. (The program format is unchanged.) This operation is also applied to the G189 command.

## Tool compensation

(1) Tool compensation command

When a tool compensation command is given during the program format switch mode, the machining center system compatible operation is performed.

[Machining center system compatible operation]

| | |
|---|---|
| G43 Zz Hh ; | Starts tool length offset "+". |
| G44 Zz Hh ; | Starts tool length offset "-". |
| G43.1 Xx Yy Zz Hh ; | Starts tool length compensation along the tool axis. |
| G43.4 Xx Yy Zz Aa Cc Hh ; | Starts tool center point control type 1. |
| G43.5 Xx Yy Zz Ii Jj Kk Hh ; | Starts tool center point control type 2. |
| G49 ; | Cancels tool length compensation. |
| G41 Xx Yy Dd ; | Starts tool radius compensation (left). |
| G42 Xx Yy Dd ; | Starts tool radius compensation (right). |
| G41.2 Xx Yy Zz Aa Bb Cc Dd ; | Starts 3-dimensional tool radius compensation (left). |
| G42.2 Xx Yy Zz Aa Bb Cc Dd ; | Starts 3-dimensional tool radius compensation (right). |
| G40 ; | Cancels tool radius compensation. |

The maximum number of tool offset sets is determined by the Lathe system specifications. If a given offset number (h/d) is outside the specification range, the program error (P170) occurs.

(2) Relation with tool compensation setting

If you issue a tool compensation command while the program format is being switched, the program applies compensation, assuming that the tool length or wear setting value of the axis designated in the parameter "#1028 base_K", which is any one of the 1st axis, 2nd axis, 1st additional axis, and 2nd additional axis displayed in the tool offset screen, is considered as the offsets of length dimension and length wear. Likewise, Nose R and R wear in the tool offset screen are considered as the offsets of radius dimension and radius wear.
The table below shows the relation between the items displayed in the tool offset screen and the tool offset operation during the program format switch is in progress.

| Parameters | Setting value |
|---|---|
| #1026 base_I | X |
| #1027 base_J | Y |
| #1028 base_K | Z |

| Parameters | Setting value | | |
|---|---|---|---|
| | 1st axis | 2nd axis | 3rd axis |
| #1013 axname | X | Z | Y |
| #1022 axname2 | X1 | Z1 | Y1 |

| Items in Tool offset screen | Tool compensation operation during program format switch |
|---|---|
| Tool length - 1st axis (X1) | (Not used) |
| Tool length - 2nd axis (Z1) | Used as the length dimension. |
| Tool length -1st additional axis (Y1) | (Not used) |
| Tool length - 2nd additional axis | (Not used) |
| Tool nose R | Used as the radius dimension. |
| Wear - 1st axis (X1) | (Not used) |
| Wear - 2nd axis (Z1) | Used as the length wear. |
| Wear - 1st additional axis (Y1) | (Not used) |
| Wear - 2nd additional axis | (Not used) |
| R wear | Used as the radius wear. |
| Tool tip point P | (Not used) |

If the parameter "#1028 base_K" is unspecified (left blank), the tool length and wear of the 2nd axis are treated as the length and wear offsets.

(3) Handling of tool offsets before and after the program format switch

The tool offset you enabled before program format switch cannot be carried over after the format switch. Likewise, the tool offset you enabled during program format switch cannot be carried over after cancel of the format switch. Therefore, make sure that the tool compensation cancel operation is completed (*1) before commanding G188 or G189. If program format switch or program format switch cancel is specified, the tool compensation number modal (*2) is initialized.

(*1) The tool compensation operation timing depends on the MTB specifications. If G188 or G189 is given while the tool offset cancel is incomplete, the program error (P29) occurs.
The operation timing is determined depending on the setting of the parameter "#1100 Tmove" in the lathe system and the setting of the parameter "#1247 set19/bit0" in the machining center system.

(*2) The lathe system applies the T command modal and the machining center system applies the H/D command modal.

| | | |
|---|---|---|
| Lathe system | G28 X Y Z ; | |
| | T0101 ; | Starts tool length compensation for which compensation number #1 is designated using the T command. |
| | G1 X-20. F1000 ; | |
| | G41 ; | Enables nose radius compensation. |
| | T0000 ; | |
| | G40 X0. Z0. ; | Completes the tool length compensation cancel operation using "T0", "G40", and "axis travel". |
| | G188 ; | Switches to the machining center system (T modal is initialized.) |
| Machining center system | T02 ; | |
| | M06 ; | |
| | G43 Z10 H2 ; | Starts tool length compensation for which compensation number #2 is designated using the G43 command. |
| | G41 D2 ; | Starts tool radius compensation for which compensation number #2 is designated using the G41 command. |
| | G49 ; | |
| | G40 X0. Y0. ; | Completes the tool length compensation cancel operation using "G49", "G40", and "axis travel". |
| | G189 ; | Switches to the lathe system (H/D modal is initialized.) |

### System variable

After switching the program format, you can use the system variables of the switched G code system. If you use a system variable that can only be used in the previous G code system, the program error (P241) occurs.
For details, refer to "23.1.1 System Variables for Program Format Switch".

### Modal status

The G group 24 modal status is changed as follows before and after the program format switch command.

| Status | G group 24 modal |
|---|---|
| At startup (initial state) | G189 |
| After program format switch command | G188 |
| After program format switch mode cancel command | G189 |

If the program format switch command or program format switch cancel command is issued using the PLC I/F method, the G group 24 modal status is switched at the start of automatic cycle operation. This is not synchronized with the PFCHS signal.

(1) Each modal status

| Operation | Each modal status after the operation |
|---|---|
| Program format switch | Initial status of program format in machining center system (*1)(*2) |
| Program format switch cancel | Initial status of program format in lathe system (*1) |

(*1) If the program format switch command or program format switch cancel command is issued using the PLC I/F method, each modal status is initialized at the start of automatic cycle operation (when the G group 24 modal status is changed). The modal status is not initialized when the PLC signal (PFCHR) has been operated.

(*2) The spindle selection of the G group 20 modal is not initialized. The spindle selection status that is set before program format switch is inherited during the program format switch mode. The spindle selection status by G group 20 cannot be changed during the program format switch mode.

The modal display screen displays the contents based on the program format during the program format switch mode. (If you switch the format with the modal screen open, the display changes after you re-open the screen.)

### Fixed cycle

After switching the program format, you can use the fixed cycle command that matches the switch destination's G code system. If the program format switch is canceled, you can use the fixed cycle command for the G code system that is not yet switched.

| Operation | Fixed cycle available after operation |
|---|---|
| Program format switch | Fixed cycle available in the machining center system (G code system 1) |
| Program format switch cancel | Fixed cycle available in the lathe system (G code system based on the parameter "#1037 cmdtyp") |

### G code guidance

You can switch the G code system to be used as the base of the G code guidance display using the guidance switch menu in the edit screen.

### Other operation

(1) Relation with a part system

- Program format is changed in a part system where you execute the program format switch operation.
- The part system that enables the program format switch mode depends on the MTB specifications (parameter "#1047 G_Chg_En_Sno"). If you execute the format switch for a part system where the switch is disabled, the following operation results:

| | |
|---|---|
| Switch using G code (G188/189) | If the command is issued, a program error (P29) will occur. |
| Switch using PLC signal (PFCHR) | The program format switch request is ignored. |

(2) In the conditions shown below, the operation varies depending on the mode in which the format switch is performed.

| | During L system mode | During M system mode |
|---|---|---|
| When an incremental axis address (#1014 incax) is given | The command is treated as incremental<br>(L system compatible operation) | Disabled<br>(M system compatible operation) |
| Diameter designation axis<br>Axis with "#1019 dia" = "1" specified | The axis acts as a diameter axis (tool compensation amount and workpiece coordinate position are handled as diameter values).<br>(L system compatible operation) | The axis acts as a radius axis (tool compensation amount and workpiece coordinate position are handled as radius values).<br>(M system compatible operation) |
| Tool function (T command) | T code includes the tool number and tool offset number.<br>(L system compatible operation) | T code includes the tool number.<br>(M system compatible operation) |
| Compensation data input by program | Use the L system format.<br>(L system compatible operation) | Use the M system format.<br>(M system compatible operation) |

### Functions enabled during program format switch

Whether or not to enable/disable the function before/after the format switch depends on the MTB specifications.
The tables below show the functions handled as "standard functions" and the functions handled as "additional functions" while the program format is being switched from L system to M system.
When the following functions are used, the parameter used for each function depends on the MTB specifications.

Refer to "Programming Manual (Machining Center System)" for details of the M system functions.

[Functions handled as additional functions in M system]

(1) Functions handled as "standard functions" during program format switch

The following M system additional functions can be used as standard functions during the program format switch.

| | |
|---|---|
| Unidirectional positioning | Special fixed cycle |
| Spiral/conical interpolation | 3-dimensional coordinate conversion |
| Spline interpolation (G05.1Q2/G61.2) | Geometric command |
| Spline interpolation 2 | Polar coordinate command |
| Feed per revolution | High-speed high-accuracy control III (G05P20000) |
| Inverse time feed | Smooth fairing |
| Thread cutting (Designation of lead or number of screw threads) | Stroke check before travel |
| Workpiece coordinate system preset (G92.1) | Tool center point control |
| Scaling | Inclined surface machining command |

(2) Functions handled as "additional functions" during program format switch

Whether the M system functions shown below are available during program format switch depends on the MTB specifications.

| | |
|---|---|
| Cylindrical interpolation | High-speed machining mode I (G05P1) |
| Polar coordinate interpolation | High-speed machining mode II (G05P2) |
| Exponential interpolation | High-accuracy control (G61.1/G08) |
| G00 feedrate designation (,F command) | SSS Control |
| Pecking tapping cycle | Tolerance control |
| Deep-hole tapping cycle | High-speed high-accuracy control I (G05.1Q1) |
| 3-dimensional tool radius compensation (*1) | High-speed high-accuracy control II (G05P10000) |
| Coordinate rotation by program | Speed change skip |
| Corner chamfering/corner rounding | Torque limitation skip |
| Linear angle command | Tool length compensation along the tool axis (*1) (*2) |
| Arbitrary axis exchange control | 3-dimensional tool radius compensation (Tool's vertical-direction compensation) (*1) |
| Sub part system control I | Workpiece installation error compensation (*1) |
| Rapid traverse block overlap | Involute interpolation (*1) |

(*1) Available only during program format switch. (Not available before program format switch.)

(*2) The specification, "Tool handle feed & interruption", is also needed to enable this function.

[Functions handled as standard functions in M system]

(1) Functions handled as "standard functions" during program format switch

The following M system standard functions can be used as standard feature during the program format switch.

| | |
|---|---|
| Inch/Metric changeover | User macro |
| Circular interpolation (Center/Radius designation) | MTB macro |
| Helical interpolation | Fixed cycle for drilling |
| Synchronous tapping cycle | Mirror image by G code |
| Constant surface speed control | Normal line control |
| Tool position offset | Circular cut |
| Tool radius compensation | Start point designation synchronization |
| Workpiece coordinate system selection (6 sets) | Parameter input by program |
| Local coordinate system | Compensation data input by program |
| 2nd, 3rd, 4th reference position return | Skip |
| Reference position check | Multi-step skip |
| Tool exchange position return | Automatic tool length measurement |

(2) Functions handled as "additional functions" during program format switch

Whether the M system functions shown below are available during program format switch depends on the MTB specifications.

| |
|---|
| G83 (Small-diameter deep-hole drilling cycle) |

## Relationship with other functions

### Reset and emergency stop

If you execute NC reset or cancel Emergency stop, the G group 24 modal status changes as follows. (The G group 24 modal state after the operation is stated in brackets ( ).)
The status varies depending on a combination of the status of the program format switch request (PFCHR) signal and the parameter (#1151).

| PFCHR status | #1151 rstint | NC reset 1 | NC reset 2 | Emergency stop cancel |
|---|---|---|---|---|
| ON | 0 | Hold (G188/G189) (*1) | Hold (G188/G189) (*1) | Hold (G188/G189) (*1) |
| | 1 | | | |
| OFF | 0 | Hold (G188/G189) (*1) | Initialize (G189) | Hold (G188/G189) (*1) |
| | 1 | Initialize (G189) | | Initialize (G189) |

(*1) The G group 24 modal status after the operation is unchanged from that immediately before the operation (G188 or G189).
However, when the parameter "#1319 Grp24_mdrst_off" is set to "1", the G group 24 modal status is set based on the program format switch request signal (PFCHR) at automatic operation start.
When the parameter "#1319 Grp24_mdrst_off" is set to "0", the program holds the G group 24 modal status without canceling the program format switch even if PFCHR is set to OFF.

### Manual arbitrary reverse run

The program format switch (G188/G189) command block is treated as reverse run prohibited block. A reverse run across the G188/G189 block is not possible. However it is possible to reverse-run the program up to the G188/G189 block, and then forward-run the program.

### Interactive cycle insertion

(1) If you execute G180 P1 (interactive cycle insertion program header command) during G188 mode, the program error (P29) occurs. Before executing G180 P1, issue the G189 command to cancel the program format switch.
(2) If you execute G180 P1 (Interactive cycle insertion program Header command) with PFCHS ON, the program error (P29) occurs. Before executing G180 P1, turn OFF the Program format switch request (PFCHR) signal to cancel the program format switch.
(3) If G188 is given during execution of the interactive cycle insertion program (G180 P1 to G180 P0 blocks), the program error (P29) occurs.
(4) If the program format switch request (PFCHR) signal is turned ON during execution of interactive cycle insertion program (G180 P1 to G180 P0 blocks), PFCHR is ignored. (The program format is unchanged.)

### Graphic check

(1) The G code system at the start of graphic check follows the setting of the parameter "#1037 cmdtyp".
(2) If the program format switch request (PFCHR) signal is set ON, the G code system is not switched.

### Program restart

(1) If the program format switch request (PFCHR) signal is set ON during restart search, it is ignored. (Program format is not switched in the middle of search.)
(2) If the program format switch request (PFCHR) signal is set ON while the axes are moving toward the restart position, it is ignored. (Program format is not switched. Automatic operation start is executed from the program restart position.)

### Mixed control (Cross axis control)

(1) If G188 is commanded in a part system during mixed control I/II, a program error (P29) will occur.

(2) When the axis included in the G188 modal part system is designated as the mixed control target in mixed control II, an operation error (M01 1035) will occur.

### Spindle synchronization

When the program format switch is carried out during spindle synchronization, the spindle synchronization status is held. The spindle synchronization can be canceled after the program format switch has been completed.

### Tool spindle synchronization I (polygon)/tool spindle synchronization II (hobbing)

When the program format switch is carried out during tool spindle synchronization, the tool spindle synchronization status is continued. However, the tool spindle synchronization cannot be canceled.

### Spindle superimposition control

When the program format switch is carried out during spindle superimposition control, the spindle superimposition control status is continued during program format switch. However, the spindle superimposition control cannot be canceled.

### Control axis synchronization between part systems

(1) In control axis synchronization between part systems I/II, if G188 is commanded in a part system that is in the control axis synchronization between part systems, a program error (P29) will occur.

(2) In control axis synchronization between part systems I/II, if the axis included in the G188 modal part system is commanded for the control axis synchronization between part systems, an operation error (M01 1037) will occur.

### Control axis superimposition/arbitrary axis superimposition

(1) If G188 is commanded in a part system that is in the control axis superimposition or arbitrary axis superimposition mode, a program error (P29) will occur.

(2) When the axis included in the G188 modal part system is designated for control axis superimposition or arbitrary axis superimposition, an operation error (M01 1004) will occur.

### T code mirror image for facing tool posts

(1) If G188 is commanded in a part system that is in the T code mirror image for facing tool posts mode, a program error (P29) will occur.

(2) Even if the T command with the mirror image for facing tool posts specified is issued during the program format switch, the mirror image is not enabled. Only designate the tool number.

## Precautions

(1) The program format switch command (G188/G189) must be issued alone in a block. If another G code is commanded in the same block, a program error (P33) will occur.

(2) The program format switch command (G188/G189) has no address designation other than G. If any address other than G is given, a program error (P33) will occur.

(3) If the specifications of this function are not valid, a program error (P34 or P39) will occur when G188 is commanded. The validity of this function depends on the MTB specifications (parameter "#1254 set26/bit1").

(4) When the program format switch command (G188/G189) is given, and if any G group is in the modal state that disables the program format switch mode, a program error (P29) will occur. Listed below are the G modal states that enable the program format switch mode.

(a) G code modal with G188 available (L system)

| Group | Function name | G modal that enables the program format switch |
|---|---|---|
| 00 | (Non-modal) | - |
| 01 | Travel (positioning, interpolation) | G00, G01, G02, G03 |
| 02 | Plane selection | Any modal |
| 03 | Absolute command / Incremental command | Any modal |
| 04 | Barrier check | G23 |
| 05 | Synchronous/asynchronous feed (feed per revolution/feed per minute) | Any modal |
| 06 | Inch/metric command | Any modal |
| 07 | Tool nose radius compensation | G40 |
| 09 | Fixed cycle | G80 |
| 10 | Fixed cycle return level | Any modal |
| 11 | Scaling | G50.2 |
| 12 | Workpiece coordinate system selection | Any modal |
| 13 | Cutting mode (exact stop check, automatic corner override, tapping) | G61, G61.1, G64 |
| 14 | User macro modal call | G67 |
| 15 | Mirror image for facing tool posts or balance cut mode | G69 |
| 16 | Coordinate rotation by program | G69.1 |
| 17 | Constant surface speed control | G97 |
| 18 | Balance cut | G14 |
| 19 | Milling interpolation (cylindrical, polar coordinate interpolation) | G13.1, G113 |
| 20 | Spindle control mode | Any modal |
| 24 | Program format switch | Any modal |
| 28 | Rapid traverse block overlap | Any modal |

(b) G code modal with G189 available (M system)

| Group | Function name | G modal that enables the program format switch |
|---|---|---|
| 00 | (Non-modal) | - |
| 01 | Travel (positioning, interpolation) | G00, G01, G02, G03, G02.1, G03.1 |
| 02 | Plane selection | Any modal |
| 03 | Absolute command / Incremental command | Any modal |
| 04 | Stroke check before travel | G23 |
| 05 | Synchronous/asynchronous feed (feed per revolution/feed per minute) | G94, G95 |
| 06 | Inch/metric command | Any modal |
| 07 | Tool radius compensation | G40 |
| 08 | Tool length offset | G49 |
| 09 | Fixed cycle | G80 |
| 10 | Fixed cycle return level | Any modal |
| 11 | Scaling | G50 |
| 12 | Workpiece coordinate system selection | Any modal |
| 13 | Cutting mode (exact stop check, automatic corner override, tapping) | G61, G61.1, G64 |
| 14 | User macro modal call | G67 |
| 15 | Normal line control | G40.1, G150 |
| 16 | Coordinate rotation by program | G69 |
| 17 | Constant surface speed control | G97 |
| 18 | Polar coordinate command | G15 |
| 19 | Mirror image by G code | G50.1 |
| 21 | Milling interpolation (cylindrical, polar coordinate interpolation) | G13.1, G113 |
| 24 | Program format switch | Any modal |
| 27 | Workpiece installation error compensation | G54.4P0 |
| 28 | Rapid traverse block overlap | Any modal |

(5) When you turn ON or OFF PFCHR (Program format switch request) to enable or disable the program format switch mode at the start of automatic operation, and if any G group is in the modal state that disables the program format switch mode, the program error (P29) occurs, which disables the start of automatic operation. Refer to (4) for the modal states where the program format switch mode is enabled.

(6) If the program format switch command (G188/G189) is issued during the following modes in G group 0, a program error (P29) will occur.

(a) Modes that disable the program format switch command (G188)

| G code | Function name |
|---|---|
| G110 | Mixed control (Cross axis control) |
| G111 | Axis name switch |
| G125 | Control axis synchronization between part systems |
| G126 | Control axis superimposition |
| G156 | Arbitrary axis superimposition |

(b) Modes that disable the program format switch cancel command (G189)

| G code | Function name |
|---|---|
| G05.1 Q2 | Spline interpolation |

(7) When the part system designated in the parameter "#1047 G_Chg_En_Sno" is invalid, an MCP alarm (Y05 1047) will occur.

# 15.14 Machining Interruption [C80]; G26

## Function and purpose

Machining interruption is a function which enables interrupt operations in the table below while a program is normally executed.
Interruption programs (called "retraction programs") need to be prepared in advance to validate various interruption operations.
This function is available only during memory mode operation, but not during MDI operation.

| Interrupt operation | Details of operation | Purpose |
|---|---|---|
| Program-based retraction | When the retract button is pressed, the program immediately branches to the predetermined retraction program. A safe tool-path that avoids interference can be programmed in the retraction program.<br>On returning from the retraction program, the tool returns to the programmed position called "machining start point", from which the operation can be restarted.<br> 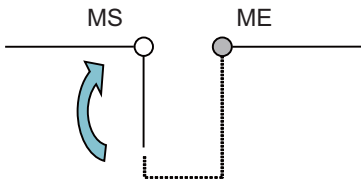 <br><br>Returns to the machining start point from the status of machining in progress.<br>MS: Machining start point<br>ME: Machining end point | e.g. when machining is temporarily suspended due to events such as when tools break, and then restarted after the issue is solved. |
| Emergency stop | When an emergency stop occurs during program execution, machining stops in a feed hold status. When the NC is restarted after the cancellation of an emergency stop, a tool returns from the stop position (caused by the emergency stop) to the interpolation restart position, and then operation restarts along the original program path.<br> 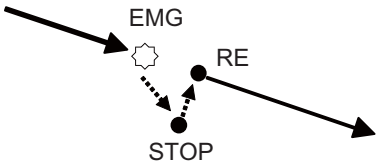 <br><br>EMG: Emergency stop<br>STOP: Stop position<br>RE: Interpolation restart position<br><br>Returns to the interpolation interrupted position from the emergency stop position as shown above, then the interpolation restarts. | e.g. when machining is temporary suspended due to such as the emergency stop. |

### Term

| Term | Meaning |
|---|---|
| Machining start point | Starting point of a single machining module. The program returns to this block after the retraction program is executed. |
| Machining end point | Ending point of a single machining module, which is paired with the machining start point. Program-based retraction is possible in a section from the machining start point to the machining end point. |
| Process start point | Starting point of machining process by a single tool. Indicates the tool change command block. |
| Selected point | Indicates one of the machining start point, machining end point, and process start point. |
| Retraction program | Program to retract the tool safely during each process. Executed when retraction is started. |
| Machining interruption program | Program (retraction program) that is started by the interruption operation. |
| Slide amount | Distance from the current machine position to the output position obtained by interpolation calculation. |
| Slide-movement | Movement (equivalent to the slide amount) from the current machine position to the output position obtained by the interpolation calculation. This movement is conducted automatically when the program is restarted after an emergency stop. |
| Slide speed | Speed to perform slide-movement operation.<br>This setting depends on the MTB specifications (parameter "#12125 slide-F"). |

## Command format

To perform an interruption operation such as a program-based retraction, add the dedicated commands to the program in advance.

### Machining start point and machining end point

Program a mark that indicates both the machining start point and machining end point.

| | |
|---|---|
| **,Qqqqqq;** | **Machining start point** |
| **,Q0;** | **Machining end point** |

| | |
|---|---|
| ,Q | For "qqqqq", command the sequence No. of a retraction program.<br>When ",Q0" is specified, it is judged to be the machining end point. |

- Command for the machining start point or the machining end point must be issued alone in a block.
- If a command other than "N" (sequence No.) is included in the block that has the machining start point or the machining end point specified, a program error (P33) occurs.
- After commanding the machining start point, always specify the machining end point. If the machining start point is commanded while the machining end point remains unspecified, a program error (P727) occurs.

### Process start point

The tool change command is handled as the process start point.

| |
|---|
| **T****;** |

- Only the T command for tool change or tool selection is recognized as the process start point.
  A T command (T**00, T**88, etc. (*1)) that cancels tool offset is not recognized as the process start point. In addition, the T command macro calling is not recognized as the process start point.

(*1) The T command format (the number of digits for tool number or compensation number, the availability of the tool life management II format, etc.) depends on the MTB specifications.

#### Note

- When the stop code (T03 0320) (stop at the selected point) is issued at the process start point, it indicates that the tool change command has not yet been executed. The tool change command is executed when the automatic operation is activated.

### Retraction program

Create a retraction program in the same program following the machining program.
A single retraction program begins with the sequence No. that matches "qqqqq" (setting value of ",Q" address) of the machining start point.

| | |
|---|---|
| **Nqqqqq;** | **Mark that indicates the head of a retraction program. ("qqqqq" indicates the sequence No.)** |
| **G26 Z0.;**<br>**:** | **Selected point return command/tapping retract command** |
| **M99;** | **Retraction program end command** |

- The retraction program is configured in the standard subprogram format.
- The G26 (selected point return/tapping retract) command is available in the retraction program.
- To end the retraction program, command M99.
- Command M99 alone in a block. If a command other than "N" (sequence No.) is issued in the same block, a program error (P33) occurs.
- The retraction programs are required as many programs as the number of the sequence Nos. specified in ",Q".

## G26 (Selected point return/tapping retract)

The G26 command returns the axis commanded in the same block to the selected point that was executed previously. (*1)

The G26 command is available only in the machining interruption (retraction) program. If the command is issued in a program other than the machining interruption program, a program error (P721) occurs.

| | |
|---|---|
| **G26 X0. Y0. Z0.;** | **Selected point return** |

- The specified axis is returned to the selected point that was executed previously.
- The specified coordinate position is ignored. In normal circumstances, specify "0".
- The rotating type rotary axis moves with a shortcut even if the parameter "#8213 Rotation axis type" is set to "Short-cut invalid" (0).
- On returning to the selected point, linear interpolation is applied with the feedrate of the F modal value.

(*1) If retraction start is performed while the tapping cycle is running, only the first G26 command in the retraction program is operated as the tapping retract command, not the selected point return command. (The second and subsequent G26 commands are operated as the selected point return command.)

| | |
|---|---|
| **G26 Zz1.;** | **Tapping retract** |

| | |
|---|---|
| Zz1 | Commands the pull-up position (*1) with the absolute position or the incremental position from point R (*2).<br>When the hole drilling axis is a diameter axis, command the diameter value even in the incremental command. |

(*1) Do not command a position under point R (*2) (in the hole bottom direction). If commanded, a program error (P730) occurs.

(*2) When point R is not specified in the tapping cycle, the initial point is assumed to be specified.

- Pull up the hole drilling axis to the commanded position.
- The hole drilling axis moves only when retraction start is performed during cutting or dwelling in the tapping cycle. If retraction start is performed in other states, the hole drilling axis does not move.
- Only the hole drilling axis can be commanded in the same block as the tapping retract command. In addition, the S code cannot be commanded. When an axis other than the hole drilling axis or the S code is commanded, a program error (P33) occurs.
- Do not perform axis movement in the process from the head of the retraction program to the tapping retract command. In addition, when the currently executed tapping cycle is in synchronous tapping mode, do not issue the S command. (If commanded, a program error (P729) occurs.)

## Detailed description

### Machining start point and machining end point, Process end point

In a general machining program, a single machining process consists of one or more machining processes (for example, multiple hole drilling) by one tool. A machining program consists of such machining processes that are described in sequence.
A machining process begins with the tool change command. This position on the program is referred to as "process start point".

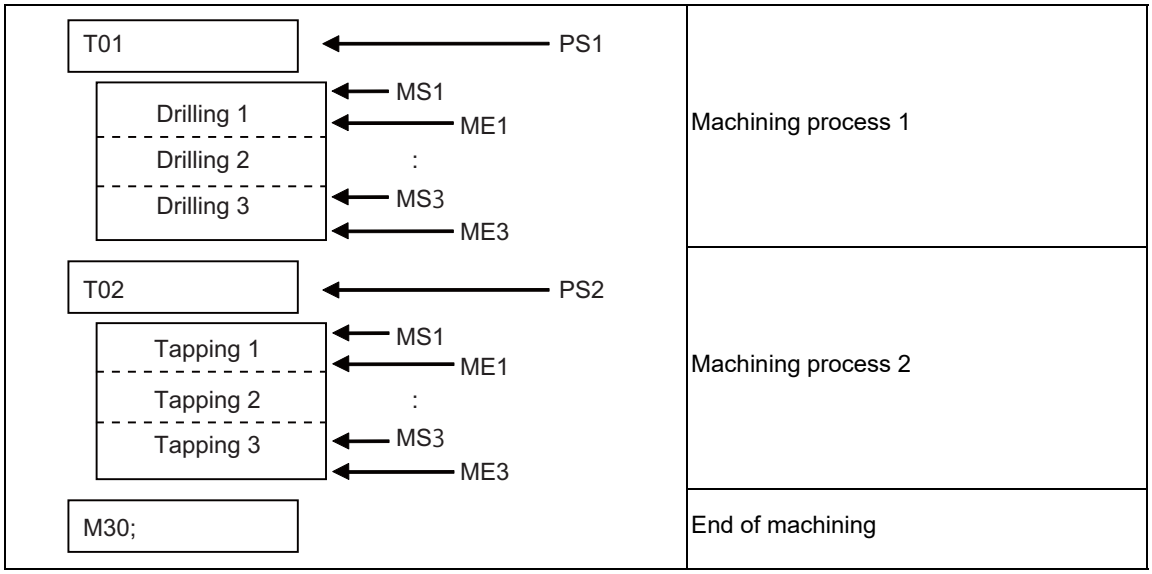


MS: Machining start point
ME: Machining end point
PS: Process start point

### Operation with single block at selected point

"Operation with single block at selected point" refers to an operation in which the machining stops at the machining start point, machining end point, or process start point.
When the "operation mode with single block at selected point" signal is set to ON, the operation with single block at selected point is performed.
"Stop at selected point" refers to an operation that the machining stops at the machining start point, machining end point, or process start point. In this case, the stop code is T320.
The following types of selected point stop states exist.
Various interruption operations are possible in the selected point stop state.

| Block where "Stop at selected point" is applied | Available interruption operation |
|---|---|
| ,Qqqqqq; | - |
| ,Q0; | Program-based retraction |
| M06; (M system)<br>T****; (L system) | - |

**Note**

(1) Macro single ON is set during the operation mode with single block at selected point.
(The machining stops at the macro block during single-block operation.)

### Stop at selected point

While "Stop at selected point" is active, the machining will stop before executing the block to be stopped at. At this time, a signal indicating each stop state is output. ("Stopping at machining start point", "Stopping at machining end point", or "Stopping at process start point" signal)
When cycle start is restarted from this stop state, machining is restarted from a command in the stopped block.

### Program-based retraction

Program-based retraction is available only when the "retraction executable" signal is set to ON (*1). When the "retraction start" signal is set to ON while the "retraction executable" signal is ON, the program branches immediately to the sequence No. indicated by the address Q (the head of the retraction program) that is commanded at the machining start point.

(*1) The operation (the condition to be "ON", etc.) of the "retraction executable" signal or "retraction start" signal depends on the MTB specifications.

For the retraction program, describe a program to retract the tool safely during each process.
In the retraction program, the G26 command can be used to return the commanded axis to the machining start point. In addition, if retraction start is performed while the tapping cycle is running, the G26 command operates as a tapping retract command to pull up the hole drilling axis to the specified position.
The retraction program ends with "M99;" in the same way as for a normal subprogram. In this case, the axis that is not returned to the machining start point automatically returns to the machining start point.

The return to the machining start point depends on the command type:
- For the selected point return command (G26), linear interpolation is applied.
- For the retraction program end command (M99), the travel varies depending on the modal of the currently executed G code (group 1).
(When G00 is commanded, the axis travels in rapid traverse mode; otherwise, it travels in linear interpolation mode.)
In addition, when G26 is operated as the tapping retract command, the hole drilling axis travels in linear interpolation mode. However, when tapping retract is performed while synchronous tapping cycle is running, the spindle rotates synchronously with the movement of the hole drilling axis.

When the retraction program ends, the modal is restored to the state that is set at the machining start point. Each axis stops at the machining start point block after returned to the machining start point. If cycle start is performed in this block stop state, the commanded rotation speed and commanded signal (forward rotation start/reverse rotation start, etc.) of the spindle are restored to the state that was set at the machining start point.

(1) When reset is performed while the retraction program is running, the currently executed program ends. In addition, if the "reset 2" signal is input, the program is executed from the machining start point at the next cycle start operation.
(2) If an MDI interruption is conducted, the retraction executable state is released. An MDI interruption can not be conducted while the retraction program is running.
(3) When retraction start is performed while the miscellaneous function is running (in the state in which the corresponding strobe signal is set to ON and waiting the FIN signal), the strobe signal is set to OFF, and also the FIN signal wait state is canceled.
(4) Tool radius compensation is canceled when the retraction program is started.
Command the tool radius compensation after the machining start point, and cancel it before the machining end point.
(5) When the retraction program is executed, the program nesting level is incremented by one in the same way as subprogram calling. Therefore, the retraction program cannot be started if the nesting level has reached the maximum.
(6) The operation at the start of the retraction program conforms to that at the start of macro interruption. However, the interruption method is fixed to Type 1 (operation to immediately stop the currently executed block and start the retraction program).

(7) To return each modal to the state that was set at the machining start point when the retraction program is ended (M99 is executed), the machining operates as shown below.

[G96 mode at machining start point]

The spindle stops with "S0" just before the retraction program ends.

[G97 mode at machining start point]

When the following multiple conditions are specified together, the rotation speed may increase.
- The constant surface speed control axis is near the center of the spindle.
- The G96 modal and surface speed were recovered when the retraction program was ended.

Therefore, retract the constant surface speed control axis to the position at which the following conditions are satisfied before the retraction program is ended.
- Position sufficiently far away from the center of the spindle
- Position at which the axis does not pass near the center of the spindle when it moves to the machining start point

(8) In the retraction executable state, control is moved to the retraction program by retraction start even when the block of timing synchronization between part systems is executed. When the machining of another part system executes a block late, the block is not completed. Do not perform timing synchronization operation between part systems in the retraction executable section (from the machining start point to the machining end point).

(9) Do not perform the following operations related to the coordinate system in the retraction executable section (from the machining start point to the machining end point) and in the retraction program.
- Local coordinate system setting
- Change of external workpiece coordinate system offset
- Coordinate system setting
- Workpiece coordinate system preset

## Emergency stop

When the parameter "#11020 Mcngit_Spec/bit0" is set to "1" (Enable), operation will not be ended even if emergency stop occurs during automatic operation, which causes the machining to be placed in the automatic operation pause state (stop code (T02 0200)). After an emergency stop is released, operation can be restarted by the automatic operation start. (This parameter setting depends on the MTB specifications.)
When operation is restarted, slide-movement (moved with rapid traverse to the interruption point obtained by the interpolation calculation) and spindle state recovery is performed, and then the interrupted block operation (interpolation) is restarted. The travel speed to the interruption point depends on the MTB specifications (parameter "#12125 slide-F").
For details on the spindle recovery, refer to the "PLC Interface Manual".

### Note

(1) The interruption point obtained by the interpolation calculation precedes the actual machine position; therefore, the restart position will be placed before the emergency stop position.

(2) After an emergency stop occurred during MDI operation, the operation can be restarted; however, slide-movement and spindle state recovery are not performed at restart.

(3) Operation can also be restarted while the machining interruption program is running.
To restart the operation, use the start signal to suit the currently executed machining interruption program.
In addition, while the retraction program is running, slide-movement is not performed even when there is a slide amount (difference between the interruption position obtained by the interpolation calculation and the actual machine position). However, the slide amount is compensated for the axis moved by G26 (selected point return/tapping retract command) or M99 (retraction program end command), or the axis with the absolute position specified. (The slide amount is added to the travel amount required to the end point.)

(4) Slide-movement is performed not only after an emergency stop is released but also when the manual interruption amount is provided when the automatic operation is restarted. The manual interruption amount can be viewed on the operation screen or drive monitor screen.

(5) If the automatic operation pause occurs by Door open I, slide-movement and spindle state recovery are not performed even when Door open I is released.

(6) When you want to use the C axis mode of the spindle position control (spindle/C axis) function, the parameter "#11020/bit0" must be set to "0" (Disable). (This parameter setting depends on the MTB specifications.)

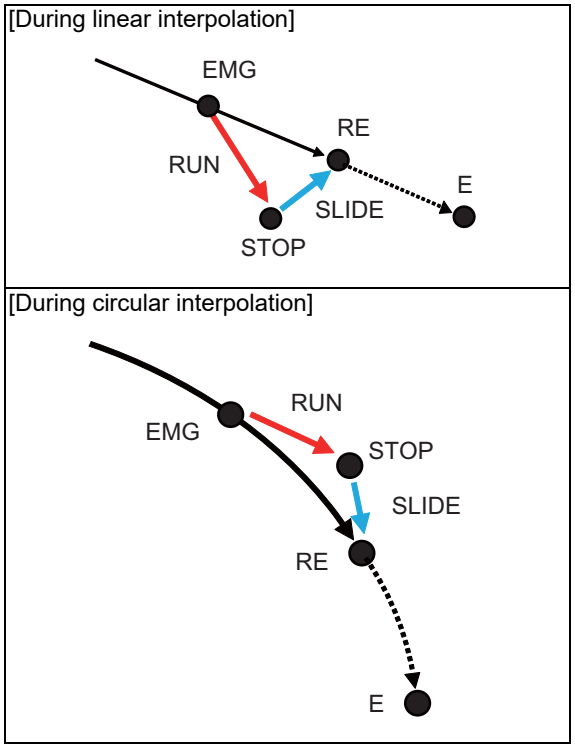


EMG: Emergency stop
RUN: Coasting after an emergency stop
STOP: Stop position
SLIDE: Slide position
RE: Interpolation restart position
E: Program end point

## Program example

### Drilling

This example shows program-based retraction (drilling) at two locations using the drill tool.

(1), (6): Positioning command to the drilling position.

(2), (7): Indicates the machining start point just before drilling.

(5), (10): Indicates the machining end point after drilling.

The "retraction executable" signal is set to ON and program-based retraction can be executed in the sections between (3) and (5) and between (8) and (10).

| | |
|---|---|
| (1) G00 X70. Z0.;<br>G00 W-50.; | |
| (2) ,Q1000; | |
| (3) G01 U-80. F600; | Retraction executable section |
| (4) U80. F2000; | |
| (5) ,Q0; | |
| (6) G00 W-50.; | |
| (7) ,Q1000; | |
| (8) G01 U-80. F600; | Retraction executable section |
| (9) U80. F2000; | |
| (10) ,Q0; | |
| M30; | |
| N1000 G26 U0.; | Retraction program |
| M99; | |

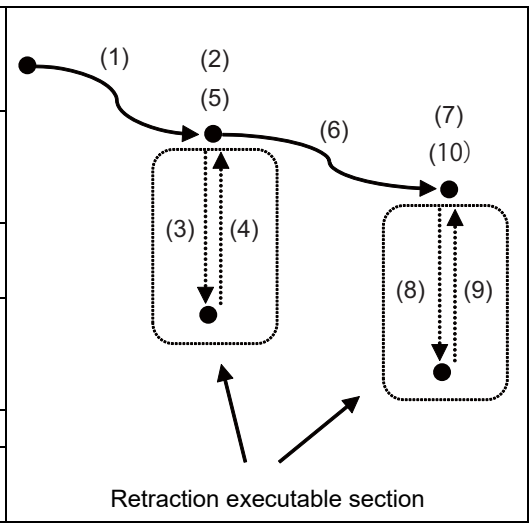

## Relationship with other functions

### All functions

Column A: Case to start retraction while the related function is running

Column B: Case to execute the related function during retraction

Column C: Case that emergency stop occurs while the related function is running, and that operation is restarted after an emergency stop is released.

○: Can be combined with the related function.

×: Cannot be combined with the related function.
Do not use the functions, which cannot be combined (indicated as "x") with the retraction start operation, in the section from the machining start point to the machining end point.

-: Not related.

Δ: It is not impossible to create this combination; however, machining cannot be continued even if specified.

Functions not described in this table cannot be combined (same as "x") as a rule.

| Related function | A | B | C |
|---|---|---|---|
| Positioning/Interpolation | | | |
| Positioning | ○ | ○ | ○ |
| Unidirectional positioning | ○ | ○ | Δ |
| Linear interpolation | ○ | ○ | ○ |
| Circular interpolation | ○ | ○ | ○ |
| Helical interpolation | ○ | ○ | ○ |
| Spiral/conical interpolation | ○ | ○ | ○ |
| Cylindrical interpolation | × | × | Δ |
| Polar coordinate interpolation | × | × | Δ |
| Milling interpolation | × | × | Δ |
| Curve interpolation | | | |
| Involute Interpolation | × | × | Δ |
| Exponential interpolation | × | × | Δ |
| Spline interpolation | × | × | Δ |
| NURBS interpolation | × | × | Δ |
| 3-dimensional circular interpolation | × | × | Δ |
| Speed | | | |
| Feed per minute | ○ | ○ | - |
| Feed per revolution | ○ | ○ | - |
| Inverse time feed | ○ | ○ | - |
| F1-digit feed | ○ | ○ | - |
| Manual speed command | ○ | ○ | - |
| Rapid traverse override | ○ | ○ | - |
| Cutting feed override | ○ | ○ | - |
| 2nd cutting feed override | ○ | ○ | - |
| Override cancel | ○ | ○ | - |
| Acceleration/Deceleration | | | |
| Automatic acceleration/deceleration after Interpolation | ○ | ○ | - |
| Rapid traverse constant-gradient acceleration/deceleration | ○ | ○ | - |
| Rapid traverse constant-gradient multi-step acceleration/deceleration | ○ | ○ | - |
| Thread cutting | | | |
| Thread cutting | ○ | Δ | Δ |

| Related function | A | B | C |
|---|---|---|---|
| Variable lead thread cutting | ○ | Δ | Δ |
| Synchronous tapping cycle | ○ | × | Δ |
| Chamfering | ○ | - | Δ |
| High-speed synchronous tapping | ○ | × | Δ |
| Spindle, tool, miscellaneous function | | | |
| Spindle control | ○ | ○ | ○ |
| Constant surface speed | ○ | ○ | ○ |
| Multiple-spindle control I | ○ | ○ | ○ |
| Multiple-spindle control II | ○ | ○ | ○ |
| Spindle orientation | ○ | ○ | ○ |
| Spindle position control (Spindle/C axis control) | ○ | ○ | × |
| Spindle synchronization | × | × | × |
| T function | ○ (*1) | ○ | - |
| Miscellaneous functions | ○ (*1) | ○ | - |
| 2nd miscellaneous functions | ○ (*1) | ○ | - |
| Tool compensation | | | |
| Tool length offset | ○ | ○ | - |
| Tool radius compensation | ○ | × | - |
| 3-dimensional tool radius compensation | × | × | - |
| Tool nose radius compensation (G40/41/42) | ○ | × | - |
| Operation support functions | | | |
| Program restart | - | - | - |
| Program support functions | | | |
| Subprogram control | ○ | ○ | - |
| Scaling | × | × | ○ |
| Macro call | × | × | - |
| Macro interruption | × | × | - |
| Fixed cycle for drilling | ○ | × | Δ |
| Special fixed cycle | ○ | × | Δ |
| Fixed cycle for turning machining | ○ | × | Δ |
| Compound type fixed cycle for turning machining | × | × | Δ |
| Mirror image | × | × | ○ |
| Coordinate rotation by program | × | × | ○ |
| 3-dimensional coordinate conversion | × | × | ○ |
| Corner chamfering/Corner R | ○ | ○ | ○ |
| Linear angle command | ○ | ○ | ○ |
| Geometric command | ○ | ○ | ○ |
| Polar coordinate command | × | × | ○ |
| Chopping | × | × | - |
| Normal line control | × | × | × |
| Circular cut | × | × | Δ |
| Timing synchronization between part systems | × | × | × |
| Start point designation synchronization | × | × | × |
| Mixed control (Cross axis control) | × | × | - |
| Control axis synchronization between part systems | × | × | × |
| Balance cut | × | × | Δ |
| Common memory for part systems | × | × | - |
| 2-part system simultaneous thread cutting | × | × | Δ |
| Multi-part system program management | ○ | ○ | - |
| Machining modal | ○ | ○ | - |

| Related function | A | B | C |
|---|---|---|---|
| Automatic corner override | - | ○ | - |
| Deceleration check | - | ○ | - |
| High-speed machining mode | × | × | Δ |
| High-speed high-accuracy control I (G5.1Q1) | × | × | Δ |
| High-speed high-accuracy control II (G5P10000) | × | × | Δ |
| High-accuracy control (G61.1/G08) | × | × | Δ |
| High-accuracy spline interpolation 1 (G61.2) | × | × | Δ |
| High-accuracy spline interpolation 2 (G61.3) | × | × | Δ |
| SSS Control | × | × | Δ |
| Automation support functions | | | |
| Skip | × | × | Δ |
| Automatic tool length measurement | × | × | × |
| Safety and maintenance | | | |
| Emergency stop | - | ○ | - |
| Stored stroke limit | - | ○ | - |
| Stroke check before travel | - | ○ | - |
| Chuck barrier/tailstock barrier check | - | ○ | - |
| External deceleration | ○ | ○ | - |
| Machine support functions | | | |
| Synchronous control | ○ | ○ | ○ |
| Inclined axis control | × | × | × |

(*1) If retraction start is executed while a miscellaneous function is running (when the corresponding strobe signal is set to ON and waiting the FIN signal), the strobe signal is set to OFF, and the FIN signal wait state is canceled.

### Tapping cycle

To perform retraction start while tapping cycle, pecking tapping cycle, or deep-hole tapping cycle is running, execute the tapping retract command (G26) to pull up the tool.
In the synchronous tapping cycle, if tapping retract is performed, the spindle rotates in the direction opposite to the cutting work synchronously with the movement of the hole drilling axis. In the asynchronous tapping cycle, the spindle does not rotate even if the tapping retract is executed. Therefore, issue the spindle rotation command before the tapping retract command as necessary.
The below table shows the fixed cycles in which tapping retract is possible.

| Tapping cycle currently being executed |
|---|
| G84 (End face tapping cycle) |
| G84.1(End face reverse tapping cycle) |
| G88 (Longitudinal tapping cycle) |
| G88.1 (Longitudinal reverse tapping cycle) |

(1) When retraction is performed while the tapping cycle is running, only the G26 first commanded in the retraction program operates as the tapping retract command. The subsequently issued G26 commands operate as the selected point return command.

(2) The hole drilling axis is pulled up by the tapping retract command only when retraction start is performed during cutting or dwelling in the tapping cycle. If retraction start is performed during non-cutting in the tapping cycle, the hole drilling axis does not move with the tapping retract command.

(3) In the retraction program, the axis movement cannot be performed before the tapping retract command.
In addition, when retraction start is performed during the synchronous tapping cycle, the S command cannot be executed. (If commanded, a program error (P729) occurs.)

(4) In the retraction program for tapping cycle, always execute the tapping retract commands (G26 and hole drilling axis commands). If the retraction program is ended (the M99 block is executed) while the tapping retract command remains unexecuted, a program error (P729) occurs.

(5) The spindle rotation speed for tapping retract is the same as for cutting.
The ",S" command and the parameter "#1172 tapovr" (MTB specifications) are invalid.

[Example to apply program-based retraction to the asynchronous tapping cycle]

| | |
|---|---|
| G00 X70. Z-50.; | |
| ,Q1000; | Selected point (Machining start point) |
| S1000 M03; | (*1) |
| G88 R-7. X-10. F800 P500 ,R0; | |
| G80; | |
| M05; | |
| ,Q0; | |
| : | |
| M30; | |
| N1000 M04; | Reverses the spindle to perform asynchronous tapping retract. (*2) |
| N1010 G26 U5.; | Pulls up the hole drilling axis to "5" ("-15" for the absolute command) as the incremental command from point R. (*3) |
| N1020 M05; | Spindle stop (*2) |
| N1030 G26 X0. F1000; | The second and subsequent G26 commands operate as the selected-point return command. |
| M99; | |

(*1) In the synchronous tapping cycle, specify the spindle rotation speed with the synchronous tapping command block.

(*2) In the synchronous tapping cycle, the spindle reverse or spindle stop block is not required.

(*3) When tapping retract is performed during non-cutting (while the axis is moving from the initial point to point R), the hole drilling axis does not move.

When performing tapping successively at multiple hole drilling positions, specify the machining start point and machining end point at each hole drilling position. If the machining start point and machining end point are collectively specified for one hole drilling position, tapping is performed from the first step each time retraction start is executed. Therefore, tapping is also performed at the hole drilling position at which machining has already ended.

[Example to apply program-based retraction to the cycle with continuous tapping processes]

| | |
|---|---|
| G00 X70. Z-50.; | |
| ,Q1000; | |
| G88 R-7. X-10. F1. S800 ,R1; | (*3) |
| ,Q0; | (*2) |
| ,Q1000; | (*2) |
| Z-60.; | |
| ,Q0; | (*2) |
| ,Q1000; | (*2) |
| Z-70.; | (*1) |
| ,Q0; | |
| G80; | |
| M30; | |
| N1000; | |
| G26 U5.; | |
| G26 X0. F1000; | |
| M99; | |

(*1) If program-based retraction is performed during tapping at this hole drilling position, tapping is restarted at this hole drilling position after the retraction program was ended.

(*2)(*3) When both commands ",Q1000" and ",Q0" are not issued for each command of hole drilling position, the block to be executed will return to the hole drilling position indicated with (*3) after the retraction program ends.

### Combinations of G commands while retraction is executed

○: Enabled, ×: Disabled

| G code (G code list: 3) | Group | Operation |
|---|---|---|
| G00 | 01 | ○ |
| G01 | 01 | ○ |
| G02 | 01 | ○ |
| G03 | 01 | ○ |
| G02.3 | 01 | × |
| G03.3 | 01 | × |
| G04 | 00 | ○ |
| G09 | 00 | ○ |
| G10 | 00 | ○ |
| G11 | 00 | ○ |
| G12.1 | 19 | × |
| G13.1 | 19 | × |
| G14 | 18 | × |
| G15 | 18 | × |
| G16 | 02 | × |
| G17 | 02 | ○ |
| G18 | 02 | ○ |
| G19 | 02 | ○ |
| G20 | 06 | ○ |
| G21 | 06 | ○ |
| G22 | 04 | ○ |
| G23 | 04 | ○ |
| G27 | 00 | ○ |
| G28 | 00 | ○ |
| G29 | 00 | ○ |
| G30 | 00 | ○ |
| G30.1 | 00 | ○ |
| G30.2 | 00 | ○ |
| G30.3 | 00 | ○ |
| G30.4 | 00 | ○ |
| G30.5 | 00 | ○ |
| G31 | 00 | × |
| G31.1 | 00 | × |
| G31.2 | 00 | × |
| G31.3 | 00 | × |
| G33 | 01 | ○ |
| G34 | 01 | ○ |
| G35 | 01 | × |
| G36 | 01 | × |
| G37 | 00 | × |

| G code (G code list: 3) | Group | Operation |
|---|---|---|
| G40 | 07 | × |
| G41 | 07 | × |
| G42 | 07 | × |
| G46 | 07 | × |
| G43.1 | 20 | ○ |
| G44.1 | 20 | ○ |
| G47.1 | 20 | ○ |
| G92 | 00 | × |
| G50.2 | 11 | × |
| G51.2 | 11 | × |
| G52 | 00 | × |
| G53 | 00 | ○ |
| G54 | 12 | ○ |
| G55 | 12 | ○ |
| G56 | 12 | ○ |
| G57 | 12 | ○ |
| G58 | 12 | ○ |
| G59 | 12 | ○ |
| G54.1 | 12 | ○ |
| G61 | 13 | ○ |
| G62 | 13 | ○ |
| G63 | 13/19 | × |
| G64 | 13/19 | ○ |
| G65 | 00 | ○ |
| G66 | 14 | × |
| G66.1 | 14 | × |
| G67 | 14 | × |
| G68 | 15 | × |
| G69 | 15 | × |
| G70 | 09 | × |
| G71 | 09 | × |
| G72 | 09 | × |
| G73 | 09 | × |
| G74 | 09 | × |
| G75 | 09 | × |
| G76 | 09 | × |
| G76.1 | 09 | × |
| G76.2 | 09 | × |
| G77 | 09 | × |
| G78 | 09 | × |

| G code (G code list: 3) | Group | Operation |
|---|---|---|
| G79 | 09 | × |
| G80 | 09 | × |
| G81 | 09 | × |
| G82 | 09 | × |
| G83.2 | 09 | × |
| G83 | 09 | × |
| G83.1 | 09 | × |
| G84 | 09 | × |
| G85 | 09 | × |
| G87 | 09 | × |
| G88 | 09 | × |
| G89 | 09 | × |
| G84.1 | 09 | × |
| G84.2 | 09 | × |
| G88.1 | 09 | × |
| G92.1 | 00 | × |

| G code (G code list: 3) | Group | Operation |
|---|---|---|
| G96 | 17 | ○ |
| G97 | 17 | ○ |
| G94 | 05 | ○ |
| G95 | 05 | ○ |
| G90 | 03 | ○ |
| G91 | 03 | ○ |
| G98 | 10 | × |
| G99 | 10 | × |
| G113 | 00 | × |
| G114.1 | 00 | × |
| G114.2 | 00 | × |
| G114.3 | 00 | × |
| G115 | 00 | × |
| G116 | 00 | × |
| G117 | 00 | ○ |

## Precautions

(1) If emergency stop occurs during synchronous control, a synchronization error between the reference axis and synchronized axis is not corrected in the slide-movement process after an emergency stop is released. To use the synchronous control function, the "automatic correction of synchronization error at servo-ON" must be enabled. (This setting depends on the MTB specifications (parameter "#1281 ext17/bit3").)

(2) The fixed-cycle modal calling is not performed in the machining interruption program.
In addition, the fixed cycle (G code group 9) cannot be commanded.
(If commanded, a program error (P728) occurs.)

(3) The macro modal calling is not performed in the machining interruption program.
In addition, the macro modal call (G code group 14) cannot be commanded.
(If commanded, a program error (P728) occurs.)

# 15.15 Vibration Cutting Control (VCC); G08.5

## Function and purpose

The low-frequency vibration can be applied to the feed axis in the turning/drilling mode with the vibration cutting control (G08.5) command.

While cutting machining is performed, the chips can be dispersed by applying vibration in synchronization with the spindle rotation to the feed axis so that an air-cutting zone is made. Difficult-to-cut workpieces such as stainless steel can be machined easily and at high speed. In addition, this function can reduce the heat generated by machining and extend tool life. Only one axis vibrates in the commanded part system. Even if the cutting command is issued to two or more axes such as the taper, only the single specified axis vibrates.

[Program example]

| | |
|---|---|
| M03 S1=1000 ; | |
| G08.5 P2 ; | Starts the vibration cutting mode. |
| G00 X8.0 ; | Cutting machining program<br>(When the cutting command (G01/G02/G03) is issued during vibration cutting mode, the cutting machining is performed while vibrating the feed axis.) |
| G01 Z-20.0 F0.02 ; | |
| G00 X15.0 ; | |
| : | |
| G08.5 P0 ; | Cancels the vibration cutting mode. |
| : | |
| M02 ; | |

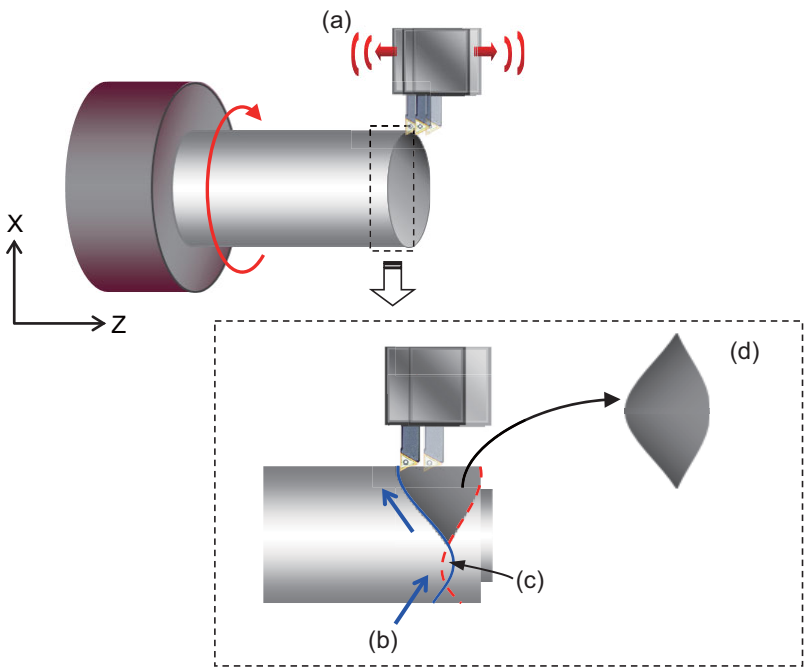


(a) The tool performs machining while vibrating in the cutting direction.

(b) Second rotation's machining path

(c) Cutting is completed at the first rotation, so this area is regarded as an "air-cutting zone" at the second rotation.

(d) When an air-cutting zone is made, granule-size chips are dispersed.

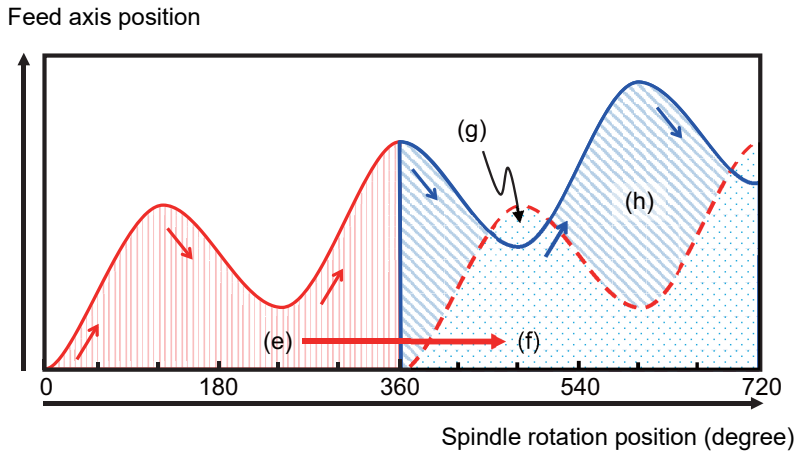


(e) Cutting zone at the 1st rotation

(f) Zone that is cut at the 1st rotation

(g) Air-cutting zone that is made by cutting at the 2nd rotation

(h) Zone that is cut at the 2nd rotation and dropped as a chip

## Enabling conditions of the function

The following conditions must be satisfied to use this function. (This depends on the MTB specifications.)

(1) The vibration cutting expansion unit (FCU8-EX744) is mounted.

<Note>

- If G08.5 is commanded while the expansion unit is not mounted, the program error (P39) occurs.
- If the expansion unit fails in authentication, the system alarm (Z106) occurs when NC starts.
  When the system alarm (Z106) is displayed, contact your service representative.
  This alarm can be cleared by pressing the Reset button. However, if G08.5 is commanded, the program error (P39) occurs.

(2) The feed axis parameter "#12570 VibCutting_VCC" is set to "1". (The setting depends on the MTB specifications.)

<Note>

- When the parameter of the axis that enables the vibration cutting control during the turning/drilling machining is set to "0", cutting machining is performed without vibration.
- The vibration cutting control is not available for the rotary axis or PLC axis. Even if the parameter is set to "1", the vibration cutting control is disabled.

(3) The parameter "#1037 cmdtyp" is set to "3" to "8". (G code systems 2 to 7).

<Note>

- If the G08.5 command is issued in a system other than G code systems 2 to 7, the program error (P34) occurs.

(4) OMR-FF that performs operation during vibration cutting is set.

(a) The parameter "#2313 SV113 SSF8/bit0" (OMR-FF control enabled) is set to "1".

(b) Set the parameter "#2306 SV106 PGM" (OMR-FF scale model gain).

(c) Set the parameter "#2139 omrff_off" to "1" (Temporarily disabled).

(By executing (c), OMR-FF is only enabled during vibration cutting mode. To enable OMR-FF in a mode other than the vibration cutting mode, set "0".)

<Note>

- If the parameter "#2313 SV113 SSF8/bit0" is set to "0", the operation error (M01 1302) is displayed. Vibration cutting is performed while OMR-FF is disabled.
- If OMR-FF is enabled in modes other than the vibration cutting mode ("#2139 omrff_off" is "0") and you want to set different scale model gains in the vibration cutting mode and in modes other than the vibration cutting mode, set the scale model gain during the vibration cutting mode to the parameter "#12583 VibPGMsp_VCC". However, if the difference between the parameter "#2306 SV106 PGM" and the parameter "#12583 VibPGMsp_VCC" is great, a load may be applied to the machine when the vibration cutting mode is started or canceled.

## Command format

The vibration cutting mode can be switched to ON or OFF by commanding G08.5 from the machining program.

When a cutting command is issued while the mode is ON, the tool performs cutting machining while vibrating.

### Starting the vibration cutting mode

```
G08.5 P2 α0 I__ K__ ;
```

| | |
|---|---|
| P | The vibration cutting mode start/cancel command (0, 2) |
| α | Axis address (Be sure to command "0" following the axis address.) |
| I | Frequency (0.10 to 31.50) |
| K | Amplitude feed ratio (0.01 to 9.99) |

### Canceling the vibration cutting mode

```
G08.5 P0 ;
```

## Detailed description

### Explanation of address

| Address | Command range (unit) | Remarks |
|---|---|---|
| P | 0/2 | ♦Issues the vibration cutting mode start/cancel command.<br>♦The command range is as follows.<br>0: Cancels the vibration cutting mode.<br>2: Vibration cutting mode<br>♦When address "P" is omitted, the program error (P33) occurs.<br>♦If an invalid value is commanded, the program error (P35) occurs. |
| α | X/Y/Z/U/V/W/A/B/C/H | ♦Commands the axis address that vibrates with the cutting command (G01/G02/G03) on two or more axes during the vibration cutting mode. The command value is held until the vibration cutting mode is canceled.<br>♦For the axis address, specify the address set in "#1013 axname" or "#1014 incax". The axis to be vibrated is determined depending on the MTB specifications.<br>♦If the commanded axis address does not exist in the commanded part system, the program error (P32) occurs.<br>♦Only one axis can be commanded with the axis address. If two or more axes are commanded, the program error (P33) occurs.<br>♦If address α is omitted at the start of the mode, the vibration cutting control is temporarily disabled for the cutting commands (G01/G02/G03) of two or more axes. |
| | 0 | ♦Command "0" following the axis address.<br>♦If "0" is omitted, the program error (P33) occurs when the basic specification parameter "#1227 aux11/bit4" is set to "1" (word command value check: valid).<br>♦If an invalid value is commanded, the program error (P35) occurs. |

| Address | Command range (unit) | Remarks |
|---|---|---|
| I | 0.10 to 31.50 | ♦Commands the frequency for one spindle rotation during vibration cutting mode I.<br>The command value is held until the vibration cutting mode is canceled.<br>♦If the value of this address exceeds the commanded range or the setting value of the parameter "#11678 VibPerRevMax_VCC" (*1), the program error (P35) occurs.<br>♦When address "I" is omitted at the start of the mode, the optimal frequency is automatically selected in the range that does not exceed the setting value of "#11678 VibPerRevMax_VCC" based on the commanded spindle rotation speed. |
| K | 0.01 to 9.99 | ♦Commands the amplitude feed ratio during vibration cutting mode I.<br>The amplitude (retract amount at vibration cutting) in the mode is determined from the amplitude feed ratio and the feed value per spindle rotation. The command value is held until the vibration cutting mode is canceled.<br> 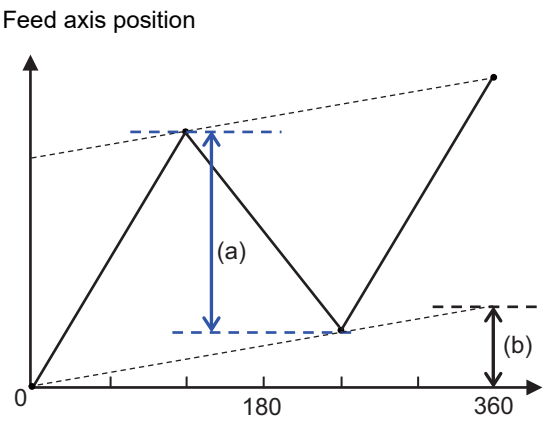 <br><br>(When the address "I" (Frequency) is set to "1.5")<br>(a) Amplitude (retract amount) = Amplitude feed ratio × Feed amount for one spindle rotation<br>(b) Feed amount for one rotation<br>♦If the value commanded to this address exceeds the commanded range or the setting value of the parameter "#11671 AmpFeedRateMax_VCC" (*1), the program error (P35) occurs.<br>♦When address K is omitted at the start of the mode, the setting value of the parameter "#11670 AmpFeedRate_VCC" (*1) is regarded as the amplitude feed ratio during mode. If the setting value of the parameter #11670 exceeds that of the parameter #11671, the program error (P35) occurs. |

(*1) These settings depend on the MTB specifications.

### Note

(1) If address "α", "I", or "K" is commanded to the "G08.5 P0" block, the program error (P32) occurs.

(2) G08.5 is an unmodal command of G code group 0.

(3) Do not set an integer value for address "I" (frequency). When an integer value is set, the chips cannot be dispersed as an air-cutting zone is not made. Theoretically, when the frequency is specified with "integer value + 0.5", the air-cutting area becomes the maximum.

### Command to invalidate the vibration cutting control temporarily

When the ",V0" command is issued in the cutting block (G01/G02/G03) during the vibration cutting mode, the vibration cutting control can be disabled temporarily.

| | |
|---|---|
| G01 Z__ X__ F__ ,V0 ; | Linear interpolation command |
| G02 / G03 Z__ X__ I__ K__ F__ ,V0 ; | Circular interpolation command |
| G02 / G03 Z__ X__ R__ F__ ,V0 ; | R-specified circular interpolation command |

| Address | Command range | Remarks |
|---|---|---|
| ,V | 0 | ♦Address ",V" is valid only in the cutting command block.<br>♦Vibration cutting is performed when the ",V" command is omitted in the cutting block during the vibration cutting mode.<br>♦",V" command is ignored if a value other than "0" is commanded.<br>♦The ",V" command is ignored if it is commanded in a mode other than the vibration cutting mode. |

**Note**

(1) If the next block of the vibration cutting enabled block is in the vibration cutting disabled state, the vibrations of the axis to be vibrated converges. The block in the vibration cutting disabled state starts moving without waiting for the vibration to converge.

(2) Vibration cutting is performed in the cutting block in the fixed cycle.

(3) In the block inserted by tool nose R offset or corner chamfering, vibration cutting is performed. The temporary invalid command of the cutting block is also applied to the inserted block in tool nose R offset and corner chamfering.

## Relationship with other functions

### Relationship with other G code functions

Column A: Operation to be performed when the combined functions (G code shown in the left) are commanded during vibration cutting mode.

Column B: Operation to be performed when the vibration cutting mode start command is issued while the combined functions are enabled.

o: The command is available.

Δ: The command is available; however, the vibration cutting control is disabled.

x: Alarm generation (The text in parentheses refers to the number of the program error to be generated.)

-: No combination

| G Code (G code list: 3) | Function name | A | B |
|---|---|---|---|
| G00 | Positioning | Δ | ○ |
| G0.5 P1 | Rapid traverse block overlap | ○ | ○ |
| G0.5 P0 | Rapid traverse block overlap invalid | ○ | ○ |
| G01 | Linear interpolation | ○ | ○ |
| G02 | Circular interpolation CW | ○ | ○ |
| | Helical interpolation CW | × (P790) | ○ |
| G03 | Circular interpolation CCW | ○ | ○ |
| | Helical interpolation CCW | × (P790) | ○ |
| G02.3 | Exponential interpolation CW | × (P790) | × (P791) |
| G03.3 | Exponential interpolation CCW | × (P790) | × (P791) |
| G04 | Dwell | ○ | - |
| G05 P1 | High-speed machining mode I ON | × (P790) | × (P791) |
| G05 P2 | High-speed machining mode II ON | | |
| G05 P4 | Direct command mode | × (P790) | × (P961) |
| G05 P10000 | High-speed high-accuracy control II ON | × (P790) | × (P791) |
| G05 P0 | High-speed machining mode I/II OFF<br>High-speed high-accuracy control II OFF | ○ | ○ |
| G05.1 Q1 | High-speed high-accuracy control I ON | × (P790) | × (P791) |
| G05.1 Q0 | High-speed high-accuracy control I OFF | ○ | ○ |
| G07.1<br>G107 | Cylindrical interpolation | × (P790) | × (P481) |
| G08 P1 | High-accuracy control ON | × (P790) | × (P791) |
| G08 P0 | High-accuracy control OFF | ○ | ○ |
| G09 | Exact stop check | ○ | - |
| G10 L70<br>G10 L100 | Parameter input by program<br>Tool shape input by program | ○ | × (P421) |
| G10 L101 | Material shape input by program | ○ | × (P422) |
| G10 L2(L20)<br>G10 L10<br>G10 L11 | Workpiece coordinate system offset input<br>Tool length compensation input<br>Tool nose wear compensation input | ○ | - |
| G10 L3 | Tool life management data registration start | ○ | × (P33) |
| G10 L14 | Programmable Current Limitation | ○ | - |
| G11 | Data input by program cancel | ○ | ○ |
| G10.9 | Diameter/Radius designation switch | ○ | ○ |
| G12.1 | Milling interpolation ON | × (P790) | × (P481) |
| G13.1 | Milling interpolation OFF | ○ | ○ |
| - (G12.1, G112(*)) | Polar coordinate command ON | × (P790) | × (P481) |
| - (G13.1, G113(*)) | Polar coordinate interpolation cancel | ○ | ○ |

| G Code (G code list: 3) | Function name | A | B |
|---|---|---|---|
| G14 | Balance cut OFF | ○ | ○ |
| G15 | Balance cut ON | × (P790) | × (P791) |
| G16 | Milling interpolation<br>Y-Z cylindrical plane selection | - (*1) | - (*2) |
| G17 | X-Y plane selection | ○ | ○ |
| G18 | Z-X plane selection | ○ | ○ |
| G19 | X-Z plane selection | ○ | ○ |
| G20 | Inch command | ○ | ○ |
| G21 | Metric command | ○ | ○ |
| G22 | Barrier check ON | ○ | ○ |
| G23 | Barrier check OFF | ○ | ○ |
| - (G22(*)) | Soft limit ON | ○ | ○ |
| - (G23(*)) | Soft limit OFF | ○ | ○ |
| G27 | Reference position check | Δ | - |
| G28 | Automatic reference position return | Δ | - |
| G29 | Start position return | Δ | - |
| G30 | 2nd to 4th reference position return | Δ | - |
| G30.1 - G30.5 | Tool change position return 1 to 5 | Δ | - |
| G31 | Skip | × (P790) | - |
| | Multi-step skip 2 | | |
| G31.1 | Multi-step skip 1-1 | × (P790) | - |
| G31.2 | Multi-step skip 1-2 | | |
| G31.3 | Multi-step skip 1-3 | | |
| G32 | Thread cutting | × (P790) | × (P791) |
| G34 | Variable lead thread cutting | × (P790) | × (P791) |
| G35 | Circular thread cutting CW | × (P790) | × (P791) |
| G36 | Circular thread cutting CCW | × (P790) | × (P791) |
| G37 | Automatic tool length measurement | × (P790) | - |
| G40 | Tool nose radius compensation cancel | ○ | ○ |
| G41 | Tool nose radius compensation left | ○ | ○ |
| G42 | Tool nose radius compensation right | ○ | ○ |
| G46 | Tool nose radius compensation (automatic direction identification) ON | ○ | ○ |
| G43.1 | 1st spindle control mode | ○ | ○ |
| G44.1 | 2nd spindle/Arbitrary spindle control mode | ○ | ○ |
| G47.1 | All spindles simultaneous control mode | ○ | ○ |
| G92 | Spindle clamp speed setting | ○ | - |
| | Coordinate system setting | ○ | - |
| - (G50.2, G250(*)) | Tool spindle synchronization IB/IC cancel | ○ | ○ |
| - (G51.2, G251(*)) | Tool spindle synchronization IB/IC ON | × | × |
| G52 | Local coordinate system setting | ○ | - |
| G53 | Basic machine coordinate system selection | Δ | - |
| G53.1 | Tool axis direction control | × (P790) | - |
| G54 - G59 | Workpiece coordinate system selection 1 to 6 | ○ | ○ |
| G54.1 | Work coordinate system selection 48 sets expanded | ○ | ○ |
| G61 | Exact stop check mode | ○ | ○ |
| G61.1 | High-accuracy control ON | × (P790) | × (P791) |
| G62 | Automatic corner override | ○ | ○ |
| G63 | Tapping mode | ○ | ○ |
| G64 | Cutting mode | ○ | ○ |

| G Code (G code list: 3) | Function name | A | B |
|---|---|---|---|
| G65 | User macro simple call | ○ | ○ |
| G66 | User macro modal call A | ○ | ○ |
| G66.1 | User macro modal call B | ○ | ○ |
| G67 | User macro modal call cancel | ○ | ○ |
| G68 | Mirror image for facing tool posts ON | ○ | ○ |
| G69 | Mirror image for facing tool posts cancel | ○ | ○ |
| - (G68(*)) | Mirror image for facing tool posts ON | ○ | ○ |
| | Balance cut mode ON | × (P790) | × (P791) |
| - (G69(*)) | Mirror image for facing tool posts cancel<br>Balance cut mode cancel | ○ | ○ |
| G68.1 | Coordinate rotation by program ON | × (P790) | × (P791) |
| G68.2 | Inclined surface machining | × (P790) | × (P791) |
| G69.1 | Coordinate rotation by program cancel<br>Inclined surface machining cancel<br>Simple inclined surface control cancel | ○ | ○ |
| G70 | Finishing cycle | ○ (*3) | - |
| G71 | Longitudinal rough cutting cycle | ○ (*3) | - |
| G72 | Face rough cutting cycle | ○ (*3) | - |
| G73 | Formed material rough cutting cycle | ○ (*3) | - |
| G74 | Face cut-off cycle | ○ (*3) | - |
| G75 | Longitudinal cut-off cycle | ○ (*3) | - |
| G76 | Compound type thread cutting cycle | × (P790) | - |
| G76.1 | Multi-part system simultaneous thread cutting cycle I | × (P790) | - |
| G76.2 | Two-part system simultaneous thread cutting cycle II | × (P790) | - |
| G77 | Longitudinal cutting fixed cycle | ○ (*3) | ○ (*3) |
| G78 | Thread cutting fixed cycle | × (P790) | × (P34) |
| G79 | Face cutting fixed cycle | ○ (*3) | ○ (*3) |
| G80 | Fixed cycle for drilling cancel | ○ | ○ |
| G81 | Fixed cycle (drill/spot drill) | ○ (*3) | × (P34) |
| G82 | Fixed cycle (drill/counter boring) | ○ (*3) | × (P34) |
| G83.2 | Deep hole drilling cycle 2 | ○ (*3) | × (P34) |
| G83 | Deep hole drilling cycle (Z axis) | ○ (*3) | × (P34) |
| G83.1 | Stepping cycle | ○ (*3) | × (P34) |
| G84 | Tap cycle (Z axis) | × (P790) | × (P34) |
| G85 | Boring cycle (Z axis) | ○ (*3) | × (P34) |
| G87 | Deep hole drilling cycle (X axis) | ○ (*3) | × (P34) |
| G88 | Tap cycle (X axis) | × (P790) | × (P34) |
| G89 | Boring cycle (X axis) | ○ (*3) | × (P34) |
| G84.1 | Reverse tapping cycle (Z axis) | × (P790) | × (P34) |
| G84.2 | Synchronous tapping cycle | × (P790) | × (P34) |
| G88.1 | Reverse tapping cycle (X axis) | × (P790) | × (P34) |
| G190 | Absolute command | ○ | ○ |
| G191 | Incremental command | ○ | ○ |
| G92.1 | Workpiece coordinate system preset | ○ | - |
| G96 | Constant surface speed control ON | × | × |
| G97 | Constant surface speed control cancel | ○ | ○ |
| G94 | Feed per minute (asynchronous feed) | × (P790) | ○ |
| G95 | Feed per revolution (synchronous feed) | × (P790) | ○ |
| G98 | Fixed cycle (Initial level return) | ○ | ○ |
| G99 | Fixed cycle (R point level return) | ○ | ○ |

| G Code (G code list: 3) | Function name | A | B |
|---|---|---|---|
| G110 | Cross axis control | × | ○ |
| G111 | Axis name switch | ○ | ○ |
| G113<br>G113.1 | Spindle synchronization I cancel | ○ | ○ |
| | Tool spindle synchronization IA (Spindle - Spindle, Polygon) mode cancel | ○ | ○ |
| | Tool spindle synchronization II (Hobbing) cancel | ○ | ○ |
| G114.1 | Spindle synchronization I | ○ (*4) | ○ (*4) |
| G114.2 | Tool spindle synchronization IA (Spindle - Spindle, Polygon) mode ON | × | × |
| G114.3 | Tool spindle synchronization II (Hobbing) ON | × | × |
| G115 | Start point designation timing synchronization Type 1 | ○ | - |
| G116 | Start point designation timing synchronization Type 2 | ○ | - |
| G117 | M code output during axis traveling | ○ | - |
| G120.1 | Machining condition selection I | ○ | ○ |
| G121 | Machining condition selection I cancel | ○ | ○ |
| G122 | Sub part system control I | ○ | ○ |
| G125 | Control axis synchronization between part systems | × | × |
| G126 | Control axis superimposition | × | × |
| G127 | Prohibits the reverse run in all part systems | ○ | - |
| G140 | Arbitrary axis exchange command | × | ○ |
| G141 | Arbitrary axis exchange return command | × | ○ |
| G142 | Arbitrary axis exchange/reference axis arrange return command | × | ○ |
| G144 | Sub part system control II | ○ | ○ |
| G145 | Cancel sub part systems I and II | ○ | ○ |
| G156 | Arbitrary axis superimposition | × | × |
| G160 | Torque limitation skip | × (P790) | - |
| G162 | Spindle speed fluctuation detection | ○ | ○ |
| G163 | Spindle speed fluctuation detection cancel | ○ | ○ |
| G164 | Spindle superimposition control | ○ (*4) | ○ (*4) |
| G174 | Simple tool center point control | × (P790) | × (P942) |
| G175 | Simple tool center point control cancel | ○ | ○ |
| G176 | Simple inclined surface control | × (P790) | × (P951) |
| G180 | Interactive cycle insertion program | ○ | ○ |
| G185 | Hole edge chamfering cycle | × (P790) | × (P34) |
| G186 | Interference check III: Interfering object data valid command | ○ | - |
| G187 | Thread milling cycle | × (P790) | - |
| G188 | Program format switch ON | × (P790) | × (P34) |
| G189 | Program format switch cancel | ○ | ○ |

(*) Only applies to G code lists 6 and 7.

(*1) The milling interpolation is not available during the vibration cutting mode.

(*2) The vibration cutting mode start command is not available during the milling interpolation mode.

(*3) The feed axis vibrates in the cutting block in the fixed cycle.

(*4) Only the reference spindle can be commanded.

### Spindle function (S command)

(1) The spindle rotation speed closest to the S command is selected from the vibration cutting conditions, and is set as the spindle rotation speed during the vibration cutting mode.

(2) If the vibration cutting mode is canceled, the spindle rotates with the issued S command.

(3) When the S command is issued to the selected spindle while the program is executing the cutting block during the vibration cutting mode, this function is enabled at the timing at which the cutting block is switched to the non-cutting block. However, the "S0" command is enabled immediately.

### Spindle synchronization, tool spindle synchronization IA/IB/IC/II, spindle superimposition

(1) If any of the following operations is performed for the spindle selected by the part system during the vibration cutting mode, the operation error (M01 1300) occurs.

- The target spindle is set as the synchronized spindle for spindle synchronization.
- The target spindle is set as the reference spindle or synchronized spindle for tool spindle synchronization IA/IB/IC (polygon).
- The target spindle is set as the hob axis for tool spindle synchronization II (hobbing).
- The target spindle is set as the superimposed spindle for spindle superimposition.

(2) When any of the following spindles is selected in the part system at the start of the vibration cutting mode, the operation error (M01 1301) occurs.

- Synchronized spindle for spindle synchronization
- Reference spindle/synchronized spindle in tool spindle synchronization IA/IB/IC (polygon)
- Hob axis in tool spindle synchronization II (hobbing)
- Superimposed spindle for spindle superimposition

### Constant surface speed control

(1) If the constant surface speed control is commanded to the spindle selected by the part system during the vibration cutting mode, the operation error (M01 1300) occurs.

(2) When the spindle selected by the part system is under constant surface speed control at the start of the vibration cutting mode, the operation error (M01 1301) occurs.

### Spindle position control (Spindle/C axis control)

(1) If the spindle/C axis control is commanded to the spindle selected by the part system during the vibration cutting mode, the operation error (M01 1300) occurs.

(2) When the spindle selected by the part system is under spindle/C axis control at the start of the vibration cutting mode, the operation error (M01 1301) occurs.

(3) When the C axis is included in the feed axis to execute the cutting block during the vibration cutting mode, the operation error (M01 1302) is displayed, and cutting is performed without vibration.

(4) When the C axis is selected for spindle position control (spindle/C axis) in the part system during the vibration cutting mode, the normal position loop gain (SV003, SV004, SV057) is used for the NC axes other than the C axis even if "#3129 cax_spec/bit4" is "1" (*1).

(*1) When the vibration cutting mode is invalid and "#3129/bit4" is "1", the gains of the NC axes other than the C axis switch to the position loop gain (SV049, SV050, SV058) for spindle synchronization at the timing that the C axis is selected. (MTB specifications)

### Spindle orientation

(1) If spindle orientation is performed to the spindle selected by the part system during the vibration cutting mode, the operation error (M01 1300) occurs.

(2) When the spindle selected by the part system is under spindle orientation at the start of the vibration cutting mode, the operation error (M01 1301) occurs.

### Spindle override

(1) When the spindle override is applied to the spindle selected by the part system during the vibration cutting mode, the spindle rotation speed closest to the spindle rotation speed specified after override is selected from the vibration cutting conditions, and is used as the spindle rotation speed in the mode.

(2) If override of the selected spindle is changed while the program is executing the cutting block during vibration cutting mode, it is enabled at the timing at which the cutting block is switched to the non-cutting block. However, the spindle override zero is enabled immediately.

### Spindle clamp speed setting

(1) When the spindle clamp speed is set to the spindle selected by the part system during vibration cutting mode, the optimal spindle rotation speed is selected from the range of the clamp speed. If there is no selectable spindle rotation speed due to the clamp speed setting, the operation error (M01 1304) occurs.

### Spindle forward run start/spindle reverse run start

(1) When the rotation direction of the selected spindle is changed while the program is executing the cutting block during the vibration cutting mode, it is enabled immediately. Do not change the spindle rotation direction during cutting.

### Macro call, subprogram call

(1) The macro call (G65/G66/G66.1) and subprogram call (M98/M198) can be commanded during the vibration cutting mode. The status of the vibration cutting mode is also inherited to a macro or subprogram.

(2) The vibration cutting control (G08.5) can be commanded in a macro or subprogram. Even though the macro or subprogram is completed, the status of the vibration cutting mode is maintained.

### Sub part system control I/II

(1) The sub part system control I/II (G122/G144) can be commanded during the vibration cutting mode. However, the status of the vibration cutting mode is not inherited.

(2) The vibration cutting control (G08.5) can be commanded in a sub part system. If the vibration cutting mode is started in a sub part system, the mode is canceled when the sub part system is completed.

### Mixed control (cross axis control) I/II

(1) If the mixed control (cross axis control) I (G110) is commanded during the vibration cutting mode, the program error (P790) occurs.

(2) The operation error (M01 1035) occurs if a command is issued to pull out the axis existing in the part system in the vibration cutting mode, or if a command is issued to return the axis to the part system in the vibration cutting mode.

(3) It is possible to issue the vibration cutting mode start command after the axis exchange or axis return.

### Arbitrary axis exchange, arbitrary axis exchange return, arbitrary axis exchange/reference axis arrange return

(1) When the arbitrary axis exchange command (G140), the arbitrary axis exchange return command (G141) or the arbitrary axis exchange/reference axis arrange return command (G142) is issued in the vibration cutting mode, the program error (P790) occurs.

(2) The operation error (M01 1101) occurs if a command is issued to pull out the axis existing in the part system in the vibration cutting mode, or if a command is issued to return the axis to the part system in the vibration cutting mode.

(3) It is possible to issue the vibration cutting mode start command after the axis exchange or axis return.

### Synchronous control, control axis synchronization between part systems, control axis superimposition, arbitrary axis superimposition

(1) During the vibration cutting mode, when a cutting command is given to the reference axis of the following functions, the reference axis vibrates but the synchronized axis or superimposed axis does not.

- Synchronous control
- Control axis synchronization between part systems
- Control axis superimposition
- Arbitrary axis superimposition

(2) During the vibration cutting mode, cutting feed clamp speed of the reference axis follows the smaller set value of the following set values.

- The parameter "#2002 clamp" (Cutting feedrate for clamp function) set to the superimposed axis
- The parameter "#12571 VibClamp_VCC" (Cutting feedrate clamp in vibration cutting mode) set to the reference axis

(3) During the vibration cutting mode, if the synchronized axis or superimposed axis exists in the part system, the operation error (M01 1302) occurs and cutting is performed without vibration cutting control.

### Deceleration check

(1) If any of the following conditions is enabled when the program executes a cutting block during vibration cutting mode, a deceleration check is performed at each joint between blocks before the next block is executed.

- When the error detection signal is ON
- When the exact stop check (G09) command is included in the same block
- When the exact stop check mode (G61) is selected
- When the next block is set to the non-cutting mode
- When the cutting feed command block being executed is set to the vibration cutting invalid block

When the block being executed is set to the vibration cutting valid block, confirm that the vibration of all axes in the system have converged before executing the next block.

(2) The deceleration check is performed during the vibration cutting mode even if the rapid traverse block overlap (G0.5) is in process.

(3) The programmable in-position check with the address ",I" is not available in the vibration cutting mode.

### Start point designation timing synchronization Type 1/2, M code output during axis traveling

(1) When the start point designation timing synchronization (G115/G116) or M code output during axis traveling (G117) is commanded during the vibration cutting mode, the function is enabled at the timing at which the vibration forward point reaches the specified position.

### Stored Stroke Limit, Interference Check III

(1) When the program executes the cutting block during the vibration cutting mode, the function is enabled at the timing when the vibration forward point is about to exceed the specified area.

### NC reset

(1) When the "NC reset 1" signal or the "NC reset 2" signal is input in the part system during the vibration cutting mode, the vibration cutting mode is canceled.

(2) When the "NC reset 1" signal or the "NC reset 2" signal is input while the program is executing the cutting block during the vibration cutting mode, reset processing is performed after vibration has converged.

### Emergency stop

(1) When an emergency stop is commanded during the vibration cutting mode, the vibration cutting mode is canceled.

(2) If an emergency stop is commanded while the program is executing the cutting block during the vibration cutting mode, the feed axis stops immediately, and the program shifts to the emergency stop mode.

### Manual arbitrary reverse run (Program check operation)

(1) If the vibration cutting control (G08.5) is commanded during a manual arbitrary reverse run, the spindle rotation speed is switched to the speed closest to the S command in the vibration cutting conditions, and the frequency, vibration frequency, and spindle rotation speed in the vibration cutting mode is notified to the ladder.

### Inclined axis control

(1) When the part system is under inclined axis control at the start of the vibration cutting mode, the operation error (M01 1301) occurs.

### Multiple-spindle control I/II, Spindle control by part system

(1) When the multiple-spindle control function is enabled, do not change the selected spindle immediately before the cutting block. If it is changed, the operation error (M01 1307) may occur.

(2) The selected spindle in the all spindles simultaneous control mode (G47.1) is set as the first spindle.

### Corner chamfering/Corner R

(1) It is possible to issue the corner chamfering or corner R command in the cutting block during the vibration cutting mode. In the inserted block for corner chamfering/corner R, machining is performed while the target axis is vibrating.

(2) The inserted block for corner chamfering/corner R inherits the vibration cutting control temporary invalid (,V0) command of the cutting block.

(3) If the vibration cutting mode is started or canceled in the next block for corner chamfering/corner R, the program error (P382) occurs.

### Program restart

(1) If the program is restarted in the block in the vibration cutting mode, the program error (P49) occurs.

### Spindle speed fluctuation detection

(1) If the actual spindle speed is different from the programmed speed due to an external factor such as a load fluctuation, the operation error (M01 1105) occurs; however, the automatic operation or the spindle does not stop.

## Precautions

(1) Make sure to issue the G08.5 as a single command. If another G code command is included in the same block, the program error (P34) occurs.

(2) During the vibration cutting mode, do not change the parameters related to vibration cutting using the function such as the parameter input by program command (G10). If any parameter is changed during the mode, the vibration cutting control cannot be correctly performed. Change parameters before issuing the vibration cutting mode start command.

(3) If the axis that moves between cutting blocks is exchanged, or if the next cutting block does not vibrate, the next block starts moving without waiting for the vibration to converge. Therefore, uncut parts may be left at the joint of the blocks. To start the next cutting block after the vibration has converged, command the exact stop check or dwell.

(4) Compared to the regular cutting, the vibration cutting control waits for the completion of vibration convergence when a cutting block is switched to a non-cutting block, which extends the machining time.

(5) When pocket machining is performed using the vibration cutting control, extra cuts may occur depending on the axis to be vibrated. Set the vibration target axis in consideration of the vibration direction, or temporarily disable the vibration cutting control.

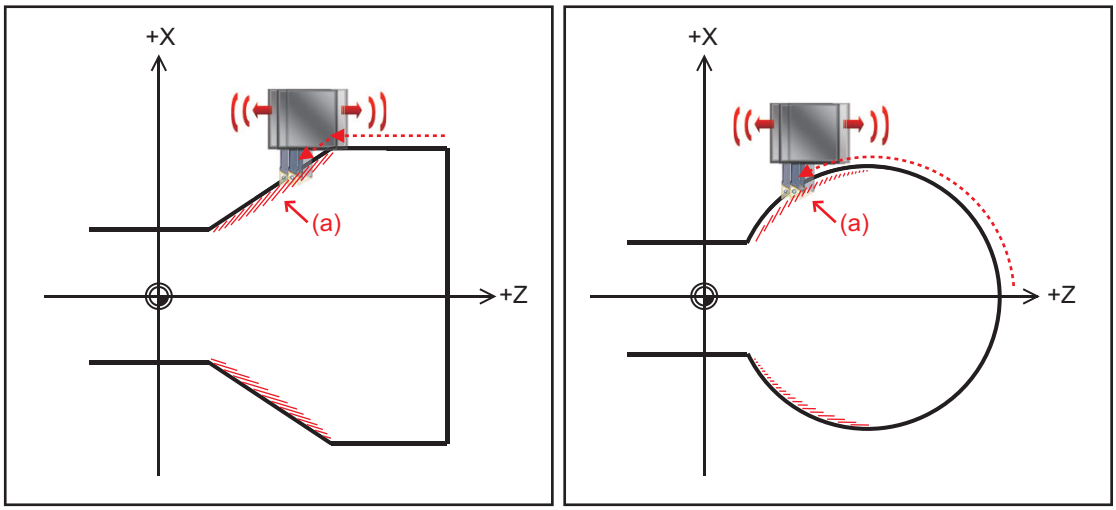


(a) Extra cuts occurred.

(6) For vibration cutting, make sure that the total number of axes (axes with the parameter #12570 set to "1") for which vibration cutting of all the commanded part systems is valid does not exceed 7 axes. If the total number of valid axes exceeds 7 when G08.5 is commanded, the operation error (M01 1301) occurs.

(7) The cutting feed acceleration/deceleration type in the vibration cutting mode is set to the step regardless of the presence or absence of vibration.

(8) If vibration cutting is commanded to the axis under synchronous control, only the reference axis vibrates. When the axes are physically connected like a gate, do not use such a command as it may cause a large shock to the machine.

# 16

# Multi-part System Control

# 16.1 Timing Synchronization Operation

**⚠ CAUTION**

**⚠ When programming a multi-part system, carefully observe the movements caused by other part systems' programs.**

## 16.1.1 Timing Synchronization Operation (! code) !n (!m ...) L

### Function and purpose

Multiple machining programs can be operated independently at same time for multi-axis and multi-part system mixed control CNC. This function is used in cases when, at some particular point during operation, the operations of 1st and 2nd part systems are to be synchronized or in cases when the operation of only one part system is required.
When timing synchronization is executed in the 1st part system ($1) and the 2nd part system ($2), operations will be as follows.

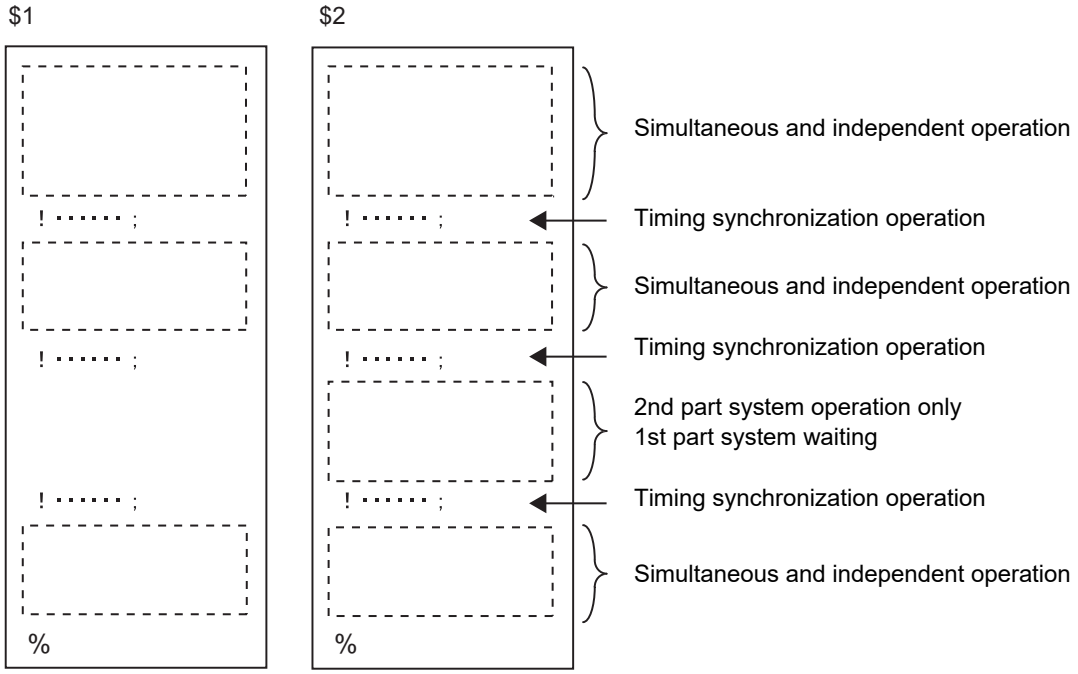


### Command format

| |
|---|
| **!n (!m ...) L_ ;** |

| | |
|---|---|
| !n, !m, ... | Timing synchronization operation (!) and part system No. (n:1 - number of part system that can be used)<br>Follows the settings of the parameter "#19419 Timing sync system" if part system number is omitted. |
| L | Timing Synchronization Operation No. 0 to 9999 |

Also valid between three part systems and more.

## Detailed description

(1) Timing synchronization between part systems during automatic operation

If !n L__ is commanded from a part system (i), operation of the part system i program will wait until !i L_ is commanded from the part system n program.
When !i L_ is commanded, the programs for the two part systems will start simultaneously.

(a) Timing synchronization between 2 part systems

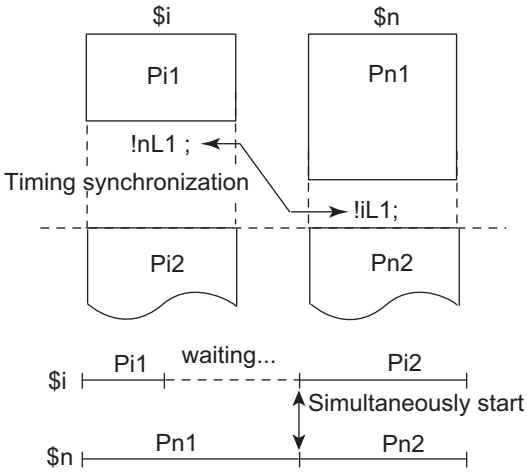


(b) Timing synchronization between 3 part systems and more

Similarly with systems with 3 and more parts, when all part systems that are included in the timing synchronization operation reach timing synchronization block, these part systems start operating from the next block simultaneously.

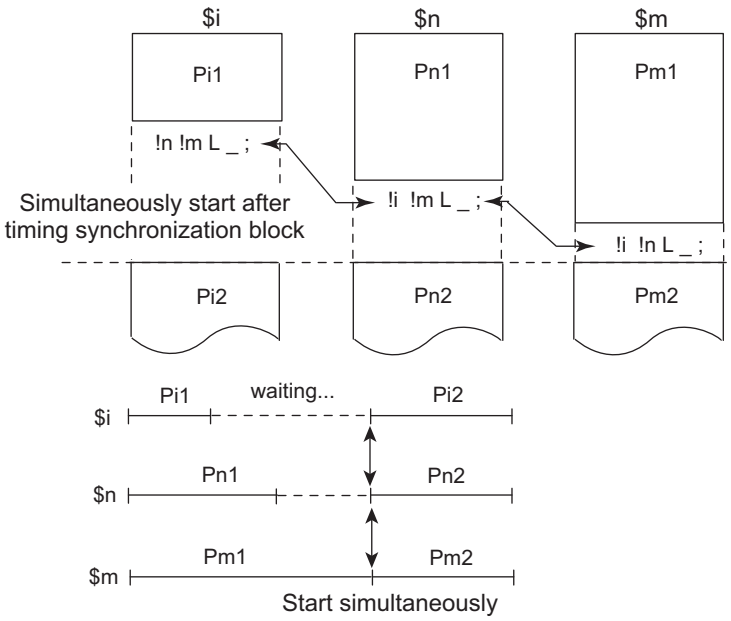

(2) The timing synchronization operation is normally issued alone in a block. However, if a movement command or M, S or T command is issued in the same block, whether to synchronize after the movement command or M, S or T command or to execute the movement command or M, S or T command after synchronization will depend on the MTB specifications (#1093 Wmvfin).

#1093 Wmvfin

0 : Wait before executing movement command.

1 : Wait after executing movement command.

(3) If there is no movement command in the same block as the timing synchronization operation, when the next block movement starts, synchronization may not be secured between the part systems. To synchronize the part systems when movement starts after waiting, issue the movement command in the same block as the timing synchronization operation.

(4) The L command is the timing synchronization identification No. The same Nos. are waited but when they are omitted, the Nos. are handled as L0.

(5) "SYN" will appear in the operation status section during timing synchronization operation. The timing synchronization operation signal will be output to the PLC I/F.

(6) In a timing synchronization operation, other part system to be waited for is specified but the own part system can be specified with the other part system.

(7) The timing synchronization operation of a specific part system can be ignored depending on the MTB specifications.
Operation will be determined by the combination of the timing synchronization operation ignore signal and parameter "#1279 ext15/bit0".
For setting combination, refer to "Time synchronization when timing synchronization ignore is set".
For the specifications of the machine you are using, see the instructions issued by the MTB.

## Relation with other functions

### Use timing synchronization operation between the part systems command and the balance cut command

If one part system is on standby for synchronization with the timing synchronization operation between part systems and the other part system command enters the synchronization standby state with the balance cut command (G15), both part systems will be in the standby state, and will not shift to the next block. Command so that timing synchronization with balance cut command (G15) and standby for waiting with the timing synchronization operation between part systems do not occur simultaneously.

### Timing synchronization operation between part systems during balance cut mode

When the timing Synchronization operation between part systems is issued in balance cut mode, which is handled as an invalid command and will not be waited for.

## Precautions

(1) When the M code can be used, both the M code and ! code can be used.

(2) While the timing synchronization operation M code is valid, if one part system is standing by with an M code, an alarm will occur if there is a ! code timing synchronization operation command in the other part system.

(3) While the timing synchronization operation M code is valid, if one part system is standing by with a ! code, an alarm will occur if there is an M code timing synchronization operation command in the other part system.

(4) When macro interruption is carried out in a part system waiting, the part system can stop while waiting even if the conditions for time synchronization are met. In this case, you will be able to continue the program, ignoring the timing synchronization with timing synchronization operation ignore signal.
For details, contact the MTB.

## 16.1.2 Timing Synchronization Operation with Start Point Designated (Type 1) ; G115

### Function and purpose

The part system can wait for the other part system to reach the start point before starting itself.
The start point can be set in the middle of a block.
Even when specifications are available for 3 part systems and more, G115 command cannot be used between 3 part systems. A program error (P33) will occur.

### Command format

```
!n L__   G115   X__   Z__   C__ ;
```

| | |
|---|---|
| !n | Timing synchronization operation (!) and part system No. (n:1 - number of part system that can be used)<br>Part systems follow the settings of the parameter "#19419 Timing sync system" if the number is omitted. |
| L | Timing Synchronization Operation No. 0 to 9999<br>(It will be regarded as "L0" when omitted.) |
| G115 | G command |
| X Z C | Start point<br>(Command by axis and workpiece coordinate value) |

## Detailed description

(1)Designate the start point using the workpiece coordinates of the other part system (ex. $2).

(2)The start point check is executed only for the axis designated by G115.
(Example) !L2 G115 X100. ;
Once the other part system reaches X100, the own part system (ex. $1) will start. The other axes are not checked.

(3)The other part system starts first when timing synchronization operation is executed.

(4)The own part system waits for the other part system to move and reach the designated start point, and then starts.

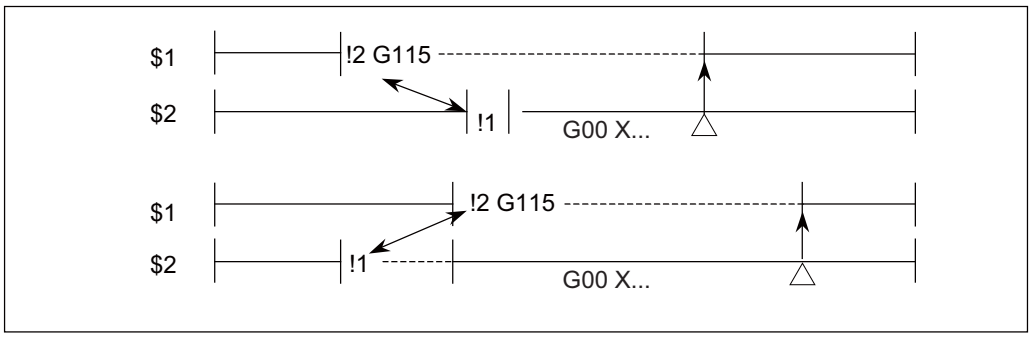


Timing synchronization  Designated start point

(5) When the start point designated by G115 is not on the next block movement path of the other part system, the own part system starts once all the designated axis of the other part system has reach the designated start point.

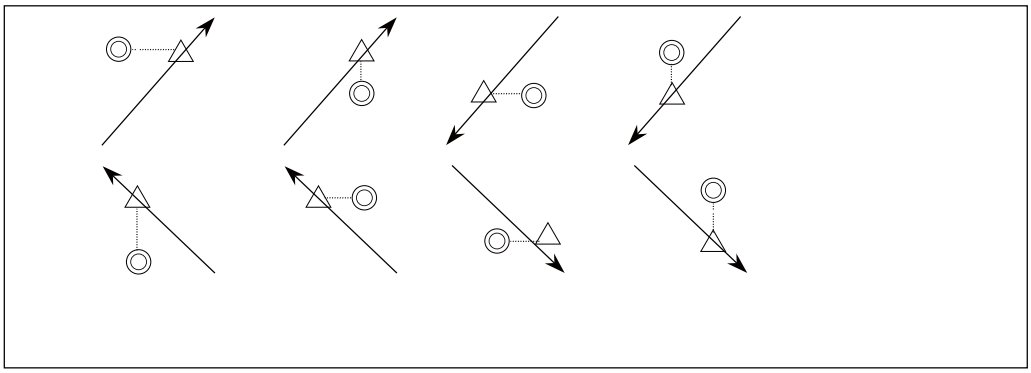

Movement  Designated start point  Actual start point

(6) After waiting, if the start point cannot be obtained with movement command of the other timing synchronization block, the operations depend on the MTB specifications (parameter "#1229 set01/bit5").

(a) When the parameter is ON
Wait till the own part system reaches the start point by moving after the next block.

(b) When the parameter is OFF
When the next block finishes moving, the own part system will start.

(7)The timing synchronization status continues when the G115 command has been duplicated between part systems. (Operations will not restart.)

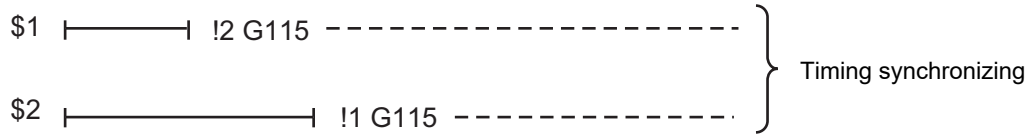


(8) The single block stop function does not apply for the G115 block.

(9) A program error (P32) will occur if an address other than an axis is designated in G115 command block.

(10) In the timing synchronization operation, other part system to be waited for is specified but the own part system can be specified with the other part system.

(11) The timing synchronization operation of a specific part system can be ignored depending on the MTB specifications. Operation will be determined by the combination of the timing synchronization operation ignore signal (PLC signal) and parameter "#1279 ext15/bit0".
For setting combination, refer to "Time synchronization when timing synchronization ignore is set".
For the specifications of the machine you are using, see the instructions issued by the MTB.

## Relation with other functions

### Use the start point designation synchronization command and the balance cut command

If one part system is on standby for synchronization with the start point designation synchronization command and the other part system enters the synchronization standby state with the balance cut command (G15), both part systems will be in the standby state, and will not shift to the next block. Command so that timing synchronization with balance cut command (G15) and timing synchronization with the start point designation synchronization command do not occur simultaneously.

### Start point designation synchronization command in balance cut mode

When the timing Start point designation timing synchronization command is issued in balance cut mode, it is handled as an invalid command and will not be waited for.

## Precautions

(1) Parameter ”#1093 Wmvfin” that selects the timing of the timing synchronization operation and commands on the same block does not work for the start point command block (G115/G116). After synchronization. the start point check will be executed by G115/G116.

(2) Be careful about the timing when interrupting during the time synchronization of G115/G116. For example, assume interruption with the macro interrupt type 1 while a part system is waiting for time synchronization with G116. In this case, if there is a movement command or MSTB command in the interrupt program, the program will continue after the interrupt program completes without waiting for the start point.

(3) The L command is the timing synchronization identification No. The same Nos. are waited but when they are omitted, the Nos. are handled as L0.

## 16.1.3 Timing Synchronization Operation with Start Point Designated (Type 2) ; G116

### Function and purpose

The own part system can make the other part system to wait until it reaches the start point.
The start point can be set in the middle of a block.
When specifications are available for 3 part systems and more, if G116 is commanded, the other designated part systems will start at the same time.

### Command format

```
!n L__   G116   X__   Z__   C__ ;
```

| | |
|---|---|
| !n | Timing synchronization operation (!) and part system No. (n:1 - number of part system that can be used)<br>Part systems follow the settings of the parameter "#19419 Timing sync system" if the number is omitted. |
| L | Timing Synchronization Operation No. 0 to 9999<br>(It will be regarded as "L0" when omitted.) |
| G116 | G command |
| X Z C | Start point<br>(Command by axis and workpiece coordinate value) |

## Detailed description

(1) Designate the start point using the workpiece coordinates of the own part system (ex. $1).

(2) The start point check is executed only for the axis designated by G116.
(Example) !L1 G116 X100. ;
Once the own part system reaches X100, the other part system (ex. $2) will start. The other axes are not checked.

(3) The own part system starts first when timing synchronization operation is executed.

(4) The other part system waits for the own part system to move and reach the designated start point, and then starts.

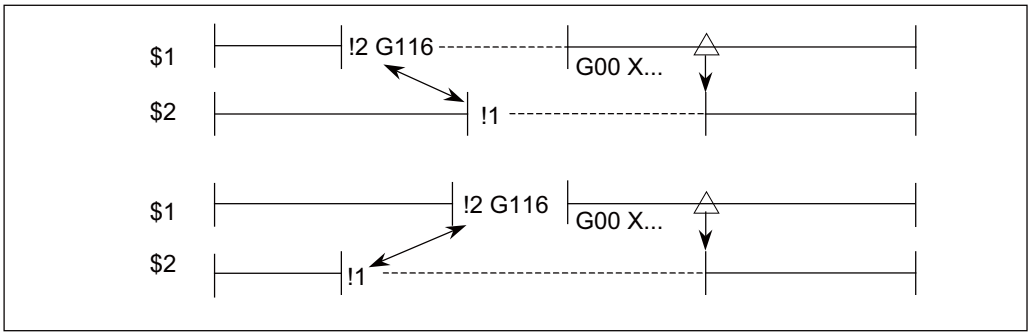


Timing synchronization  Designated start point

(5) When the start point designated by G116 is not on the next block movement path of own part system, the other part system starts once all the designated axes of the own part system has reach the designated start point.

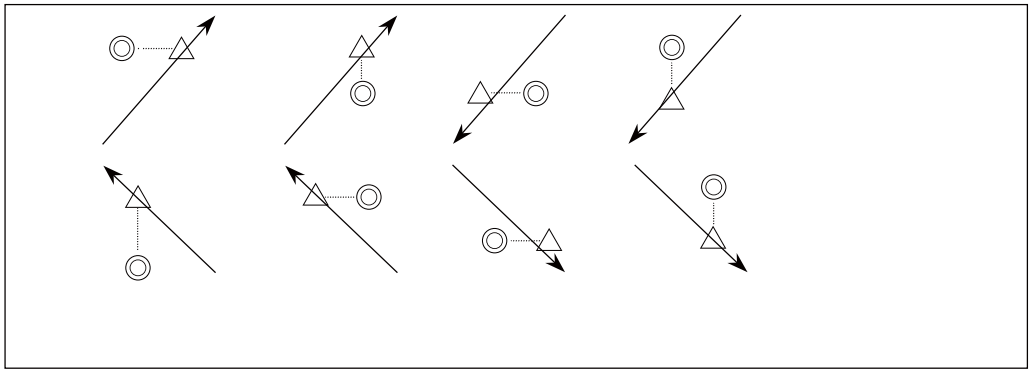

Movement  Designated start point  Actual start point

(6) If the start point cannot be obtained with the movement of the own part system to the next block, the operations depend on the MTB specifications (parameter "#1229 set01/bit5").

(a) When the parameter is ON
The own part system will have a program error (P511) before moving.

(b) When the parameter is OFF
When the next block finishes moving, the other part system will start.

(7) The timing synchronization status continues when the G116 command has been duplicated between part systems. (Operations will not restart.)

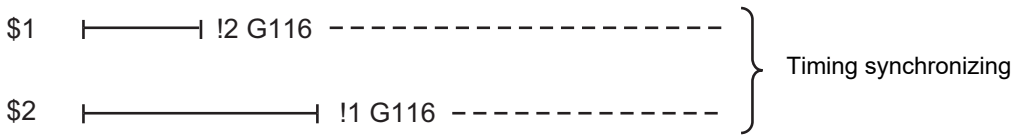

(8) When G116 is commanded between the 3 part systems, two of the other part systems will start at the same time.

(9) The single block stop function does not apply for the G116 block.

(10) A program error (P32) will occur if an address other than an axis is designated in G116 command block.

(11) In the timing synchronization operation, other part system to be waited for is specified but the own part system can be specified with the other part system.

(12) The timing synchronization operation of a specific part system can be ignored depending on the MTB specifications. Operation will be determined by the combination of the timing synchronization operation ignore signal (PLC signal) and parameter "#1279 ext15/bit0".
For setting combination, refer to "Time synchronization when timing synchronization ignore is set".
For the specifications of the machine you are using, see the instructions issued by the MTB.

## Relation with other functions

Refer to "Start point designation timing synchronization (Type 1) ; G115".

## Precautions

Refer to "Start point designation timing synchronization (Type 1) ; G115".

## 16.1.4 Timing Synchronization Operation Function Using M codes ; M***

### Function and purpose

The timing synchronization operation function between part systems is conventionally commanded with the "!" code, but by using this function, the part systems can be waited with the M code commanded in the machining program. If the timing synchronization operation M code is commanded in either part system during automatic operation, the system will wait for the same M code to be commanded in the other part system before executing the next block. The timing synchronization operation M code is used to control the timing synchronization operation between the 1st part system and 2nd part system. Whether the timing synchronization operation M code can be used depends on the MTB specifications.

### Command format

| |
|---|
| **M*** ;** |

| | |
|---|---|
| *** | Timing synchronization operation M code |

M code used for timing synchronization depends on the MTB specifications (parameter "#1310 WtMmin)", "#1311 WtMmax").

## Detailed description

(1) When the timing synchronization operation M code is commanded in the machining program, the two part systems will be waited and operation will start in the commanded block. If the timing synchronization operation M code is commanded in either part system during automatic operation, the system will wait for the same M code to be commanded in the other part system before executing the next block.

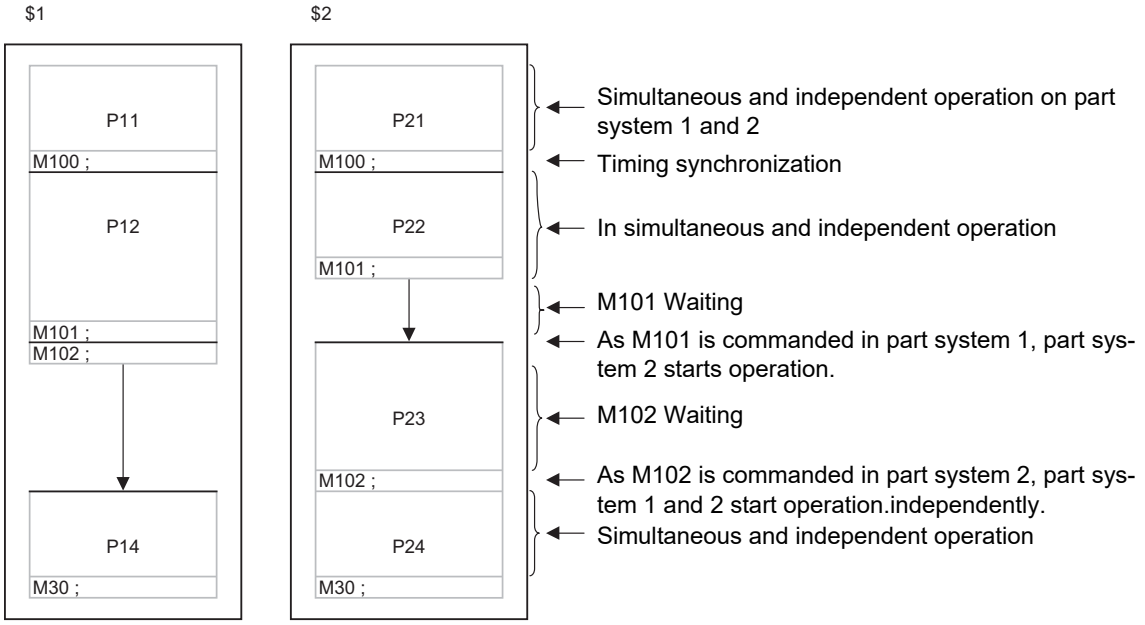


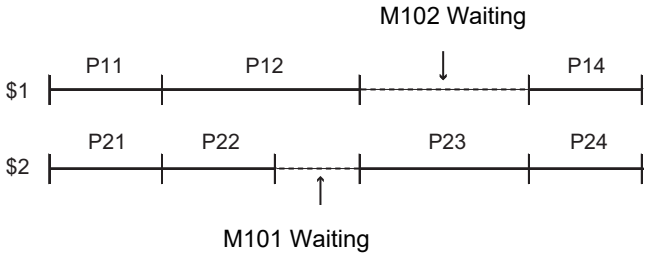


(2) When the timing synchronization operation M code has been commanded in one part system, and the part system is standing by for waiting, an alarm will occur if a different M code is commanded in the other part system.

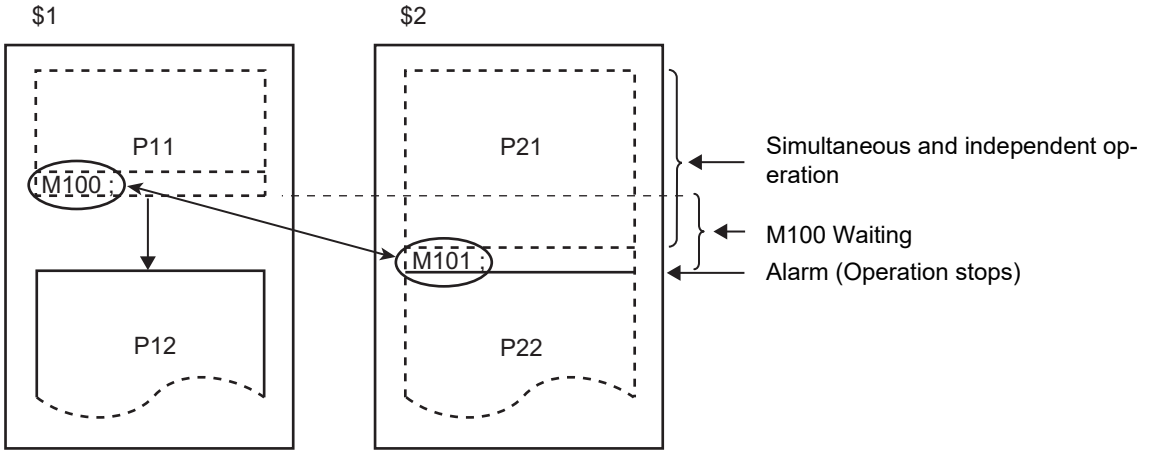

(3) The part systems are waited with the M code following the parameters below.
These settings depend on the MTB specifications. Refer to these settings. For details, refer to the specifications of your machine.

(a) M code range designation parameter (M code minimum value <= M code <= M code maximum value)

| # | Item | | Details | Setting range |
|---|---|---|---|---|
| 1310 | WtMmin | Timing synchronization M code ABS. MIN. | The minimum value of the M code. If the setting value is "0", the timing synchronization operation M code will be ignored. | 0,<br>100 ~ 99999999 |
| 1311 | WtMmax | Timing synchronization M code ABS. MAX. | The maximum value of the M code. If the setting value is "0", the timing synchronization operation M code will be ignored. | 0,<br>100 ~ 99999999 |

This function is invalid if either parameter is set to "0".
The timing synchronization operation M code cannot be used if the M code maximum value is smaller than the minimum value.
When the timing synchronization operation M code is valid, both the M code and ! code can be used for timing synchronization operation.

(b) Timing synchronization operation method parameters

| # | Item | | Details | Setting range |
|---|---|---|---|---|
| 1279<br>(PR) | ext15<br>(bit0) | Method for timing synchronization operation between part systems | Select an operation for timing synchronization operation between part systems.<br>0: If one of the part systems is not in automatic operation, ignore the timing synchronization operation and execute the next block.<br>1: Operate according to the timing synchronization operation ignore signal.<br>If the timing synchronization operation ignore signal is "1", the timing synchronization operation will be ignored. If "0", the part systems will be waited. | 0 / 1 |

Depending on the timing synchronization operation method selection parameter and timing synchronization operation ignore signal combination, the timing synchronization operation will be determined by the parameters, regardless of the command format ("!" code and M code).
This parameter requires the CNC to be turned OFF after the settings. Turn the power OFF and ON to enable the parameter settings.

| # | Item | | Details | Setting range |
|---|---|---|---|---|
| 1093 | Wmvfin | Method for timing synchronization operation between part systems | Parameter to designate the timing synchronization operation between part systems method when using multi-part systems.<br>When there is a movement command in the timing synchronization operation (!, M) block:<br>0 : Wait before executing movement command.<br>1 : Wait after executing movement command. | 0 / 1 |

## Relation with other functions

Refer to "Timing Synchronization Operation (! code);!n (!m ...) L".

## Precautions

For precautions for time synchronization, also refer to "Timing Synchronization (!code);!n (!m ...) L"

(1) During timing synchronization operation with the M code, always command the M code alone in a block.

(2) While standing by after commanding the timing synchronization operation M code in one part system, an alarm will occur if a different M code is commanded in the other part system. Operation will stop in both part systems.

(3) The timing synchronization operation (! code, M code) in the machining program can be ignored with the timing synchronization operation ignore signal. (This depends on the MTB specifications. ) Operation with a single part system is possible without deleting the timing synchronization operation (! code, M code) in the machining program.

(4) Unlike other M codes, the timing synchronization operation M code does not output code signals and strobe signals.

(5) When the M code can be used, both the M code and ! code can be used.

(6) While the timing synchronization operation M code is valid, if one part system is standing by with an M code, an alarm will occur if there is a ! code timing synchronization operation command in the other part system.

(7) While the timing synchronization operation M code is valid, if one part system is standing by with a ! code, an alarm will occur if there is an M code timing synchronization operation command in the other part system.

(8) If there is a timing synchronization operation with M code after the 3rd part system, an alarm will occur.

(9) The G115 and G116 commands cannot be used when waiting with the M code.

(10) If the M code command Nos. are overlapped, the order of priority will be M code macro, M command synchronous tapping, timing synchronization operation M code and normal M code.

(11) "SYN" will appear in the operation status section during timing synchronization operation.

(12) When the timing synchronization operation between part systems and single block operation are used simultaneously, the next block stands by until the cycle start signal is input in the part system in which the single block mode is ON. Therefore, the operation may stop at the block without the timing synchronization operation code of the part system in which the single block is OFF, where it is not supposed to stop initially.

## 16.1.5 Timing Synchronization When Timing Synchronization Ignore Is Set

### Function and purpose

Turning on the timing synchronization operation ignore signal makes it possible to ignore the timing synchronization operation of that part system.
With a 2-part system, if the timing synchronization operation ignore signal of the other part system is ON, timing synchronization is not executed. In the following section, a 3-part system is used as an example to make it easier to understand the functions.

This signal is also used in the following functions.

- Timing synchronization (! code, M code)
- Start point timing synchronization (G115, G116)
- Balance cut (G15)  Lathe system only

**Note**

(1) For sub part system control function, refer to "16.9 Sub Part System Control".

| | | Timing synchronization operation ignore signal (PLC signal) | |
|---|---|---|---|
| | | OFF | ON |
| Parameter (#1279 ext15/bit0) | 0 | (1) Ignores the timing synchronization with a part system not in automatic operation | |
| | 1 | (2) Does not ignore the timing synchronization regardless of whether or not a part system is in automatic operation (the timing synchronization is executed until the conditions for timing synchronization are established.) | (3) Ignores the timing synchronization regardless of whether or not a part system is in automatic operation (ignores the timing synchronization command for the part system with the timing synchronization ignore signal ON and the timing synchronization operation for that part system) |

The following operation diagram gives an example of ! code.

(1) A case that "Ignores the timing synchronization with a part system not in automatic operation"

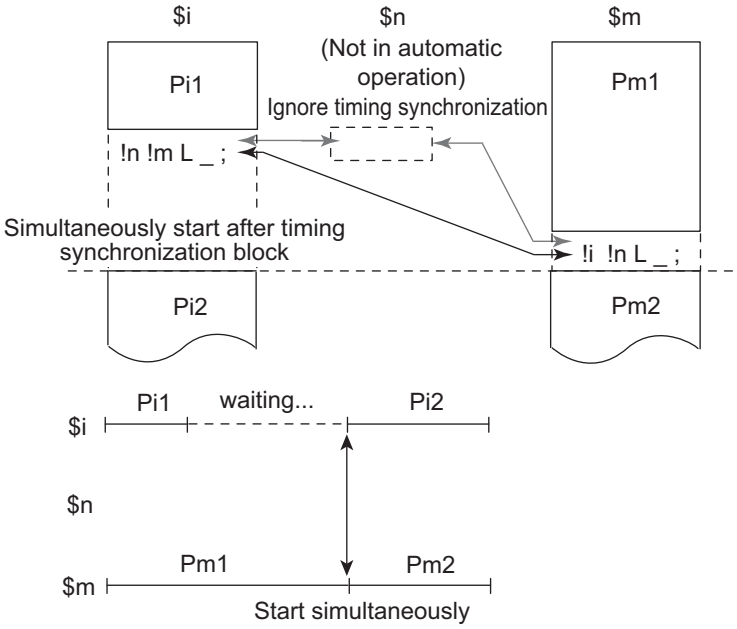

(2) A case that "Does not ignore the timing synchronization regardless of whether or not in automatic operation"

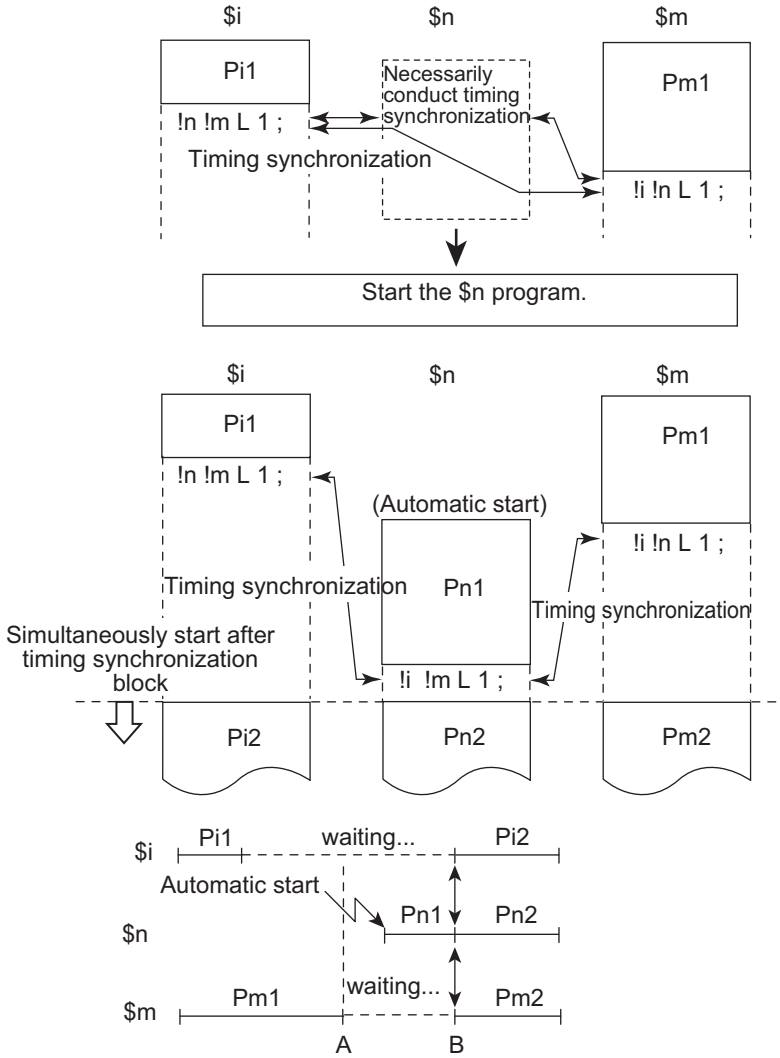


A: When timing synchronization operation between part systems (parameter "#1279 ext15/bit0" = 1), the timing synchronization status continues until the conditions for timing synchronization are established.

B: Part system n is automatically started. If the conditions for timing synchronization are established, the next block will start.

(3) A case that "Ignores the timing synchronization regardless of whether or not in automatic operation"

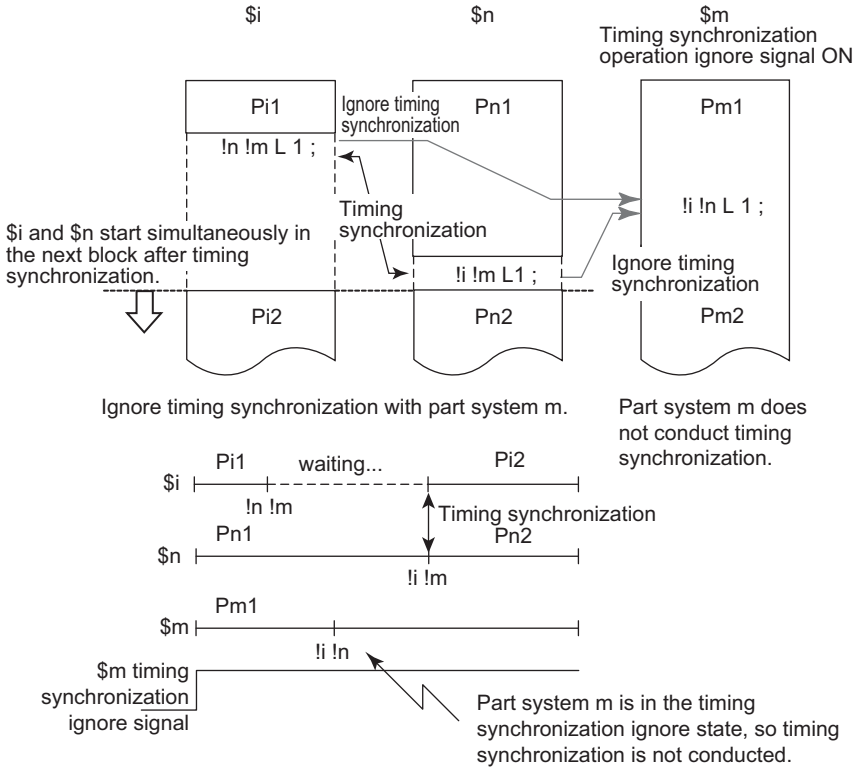

# 16.2 Balance Cut ; G15,G14

## Function and purpose

The timing for starting the operation of the 1st part system turret and 2nd part system turret can be synchronized.

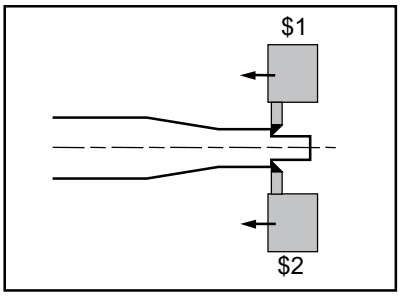


When workpiece that is relatively long and thin is machined on a lathe, deflection may result, making it impossible for the workpiece to be machined with any accuracy.
In this case, if the cutters are applied simultaneously from both sides of the workpiece and the workpiece is machined while synchronizing these (balance cut), the slack can be suppressed. This method has an additional advantage: since the workpiece is machined by two tools, the machining time is reduced.
With this function, the movement of two turrets belonging to different part systems can be completely synchronized, so the following type of machining can be carried out easily.
When commanding balance cut on any part system 2, designate the part system as G15 command block after ! code.

## Command format

### Balance cut command ON

```
!n L_ G15
```

| | |
|---|---|
| !n | Part system number for commanding balance cut (n:0 - number of a part system that can be used)<br>Follows the parameter "#19419 Timing sync system" if a part system number is omitted. (can be omitted) |
| L | Timing synchronization operation No. 0 to 9999 (can be omitted)<br>It will be regarded as "L0" when omitted. |

### Balance cut command OFF

```
G14
```

## Detailed description

(1) G15 must be commanded alone in a block, which also applies to G14.

(2) G15 and G14 commands are modals. In the CNC's initial state, the G14 balance cut command is OFF.

(3) When G15 is commanded, movement will standby until G14 is commanded or until the modal information is cleared by the reset signal. Whether to execute timing synchronization on cutting feed blocks or on all blocks depends on the MTB specifications (parameter "#1244 set16/bit2").

(4) If G15 or G14 is commanded in one part system, movement will not advance until the same G code is commanded in the other part system.

(5) When subprogram call, macro call or PLC interrupt is carried out, balance cut will apply to each command in a block that configures the subprogram.

(6) After G14 is commanded, each part system will operate independently.

(7) The number of the other part system that is to be waited on is specified as the part system number, but the own part system can be specified with the other part system.

(8) The timing synchronization command with the balance cut on that part system can be ignored depending on the MTB specifications.
Operation will be determined by the combination of the timing synchronization operation ignore signal and parameter "#1279 ext15/bit0".
For setting combination, refer to "Time synchronization when timing synchronization ignore is set".
For the specifications of the machine you are using, see the instructions issued by the MTB.

## Program example

An example of a program for machining with a 1-spindle 2-turret CNC lathe while simultaneously applying the cutters from the top and bottom of a thin long workpiece using balance cut is shown below.

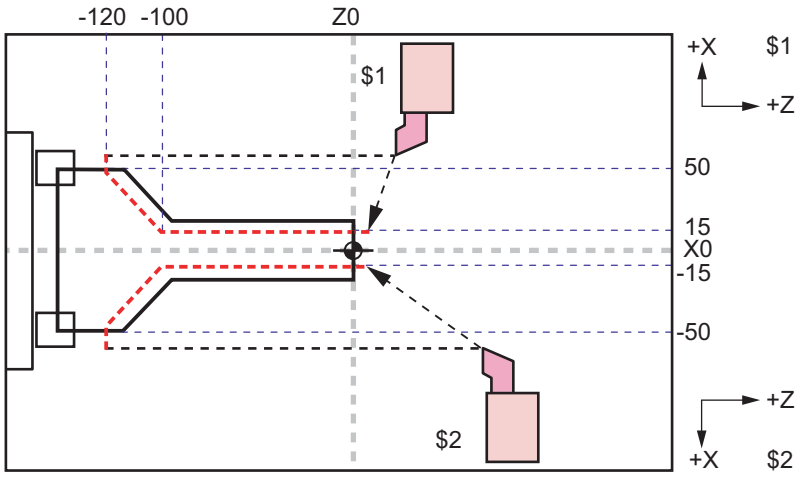


| 1st part system program ($1) | 2nd part system program ($2) |
|---|---|
| G28 XZ ;<br>S100 T0101 ;<br>G15 ;<br>G00 X15 Z3 ;<br>G01 Z-100 F0.2 ;<br>X50 Z-120 ;<br>X52 ;<br>G14 ;<br>G28 XZ ;<br>M30 ; | G28 XZ ;<br>T0101 ;<br>G15 ;<br>G00 X15 Z3 ;<br>G01 Z-100 F0.2 ;<br>X50 Z-120 ;<br>X52 ;<br>G14 ;<br>G28 XZ ;<br>M30 ; |

## Operation example

The following is an operation example of balance cut on the 1st and the 2nd part systems as per the specification for executing timing synchronization on cutting feed blocks only.

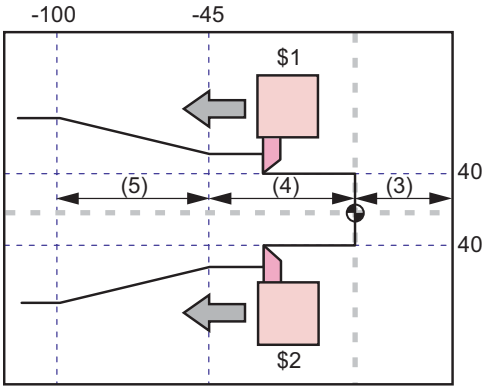


| <1st part system> | <2nd part system> | |
|---|---|---|
| : | : | |
| G15 | G15 | (1) |
| S200 | | (2) |
| G00 X40. Z-2. | G00 X40. Z-2. | (3) |
| G01 W47. F10. | G01 W47. F5. | (4) |
| G01 U40. W55. | G01 X80. Z100. F10. | (5) |
| G14 | G14 | (6) |
| G00 X100. | G00 X100. | (7) |
| : | : | |

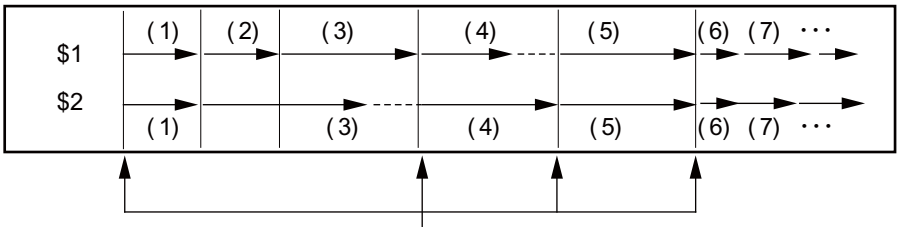


Timing synchronization section

(1) Balance cut is turned ON with the G15 command.

(2)(3) The S command and rapid traverse command are not waited, so the operation waits at the head of (4).

(4) The 1st part system will finish first, but since the next block is a cutting feed command, the operation will wait at the head of (5).

(5) Cutting will start with the 1st and 2nd part systems together.

(6) Balance cut is turned OFF with the G14 command.

(7) Each part system will operate independently after this.

## Relationship with Other Functions

(1) A program error (P481) will occur if G15 or G14 is commanded in milling mode.

(2) A program error (P29) will occur if multi-part system simultaneous thread cutting (G76.1/G76.2) is commanded in balance cut mode.

## Precautions

### Synchronization during movement

This function simultaneously starts the block for both part systems. The following synchronization will change according to the movement amount and feedrate, etc., and thus cannot be guaranteed. To move in complete synchronization, the movement amount and feedrate must be set to the same values. Note that even if the previous conditions match, there may be cases when accurate machining, such as thread cutting, is not possible.

### Number of blocks in balance cut mode

When commanding balance cut, make sure that the same total number of blocks to wait for are set between G15 and G14 on the own part system and on the other part system.
- When the target of timing synchronization is cutting feed blocks: Make sure that the same total number of cutting feed blocks are set between G15 and G14.
- When the target of timing synchronization is all blocks: Make sure that the same total number of all blocks are set between G15 and G14.

If G14 is commanded in one part system, the other part system will move to the block ahead without waiting.

| <1st part system> | <2nd part system> | |
|---|---|---|
| : | : | |
| N20 G15 | N20 G15 | |
| N30 G00 X40. Z0. | N30 G00 X-40. Z250. | |
| N40 G01 W-30. F1000 | N40 G01 W-130. F500 | |
| N50 G01 U40. W-70. | N50 G01 X-80. Z50. F1000 | |
| **N60 G01 W-20.** | **N60 G14** | ← On the 2nd part system side, balance mode has been cancelled with G14. Therefore, N 60 block on the 1st part system side moves to the block ahead without waiting for the 2nd part system. |
| N70 G14 | N70 S200 | |
| N80 G01 X120. Z30. | N80 G00 X-100. | |

### Use with timing synchronization operation between part systems

If one part system is on standby for synchronization with the timing synchronization operation between part systems and the other part system enters the synchronization standby state with the G15 command, both part systems will be in the standby state, and will not shift to the next block. Command so that standby for waiting for G15 and standby for waiting with the timing synchronization operation between part systems do not occur simultaneously.

### Timing synchronization operation between part systems during balance cut mode

When the timing Synchronization operation between part systems is issued during the balance cut mode, which is handled as a command of one block without movement and will not be waited for.

### For one part system

A program error (P39) will occur if G15 or G14 is commanded in one part system.

### Conditions for ignoring G15 and G14

If G14 is commanded when G15 is not commanded (when balance cut is OFF), the G14 block will be handled as one that has no process.

### Macro interruption during timing synchronization (Type 1)

Do not carry out macro interruption (Type 1) in a part system waiting with G15 command. Doing so will result in the following operation.

| | |
|---|---|
| Interrupted part systems: | After an interrupt program completes, timing synchronization with balance cut command G01 will not be executed. |
| Part systems not interrupted: | Stops at the G15 or G01 command block. |

### Macro interruption during timing synchronization (Type 2)

When carrying out macro interruption (Type 2) in a part system waiting with balance cut, attend to the contents of the interrupt program.
If the G01 command is in the interrupt program, the timing synchronization is executed in the block. Therefore, the block may be shifted slightly, compared to the case where there is no interruption.

### Balance cut mode at resetting

Modals at resetting follow the modal code reset parameter "#1210 RstGmd".

# 16.3 Mixed Control

## 16.3.1 Cross Axis Control ;G110

### Function and purpose

This function enables any axis to be replaced by another axis between part systems.
This makes it possible to perform operations which are not possible with regular axis configurations; for instance, tools which are provided only on part system 1 can be used for machining on part system 2.

This manual contains descriptions where part system Nos. have been added after the axis names in order to identify which part system the axes belong to (such as X1). In terms of designating the program commands, however, a single letter is used to designate the axis address just as before.

There are two types of mixed control (cross axis control) depending on the command method: Mixed control (cross axis control) I (G command), and mixed control (cross axis control) II (PLC signal). The method is chosen depending on the MTB specifications (parameter "#1280 ext16/bit4").

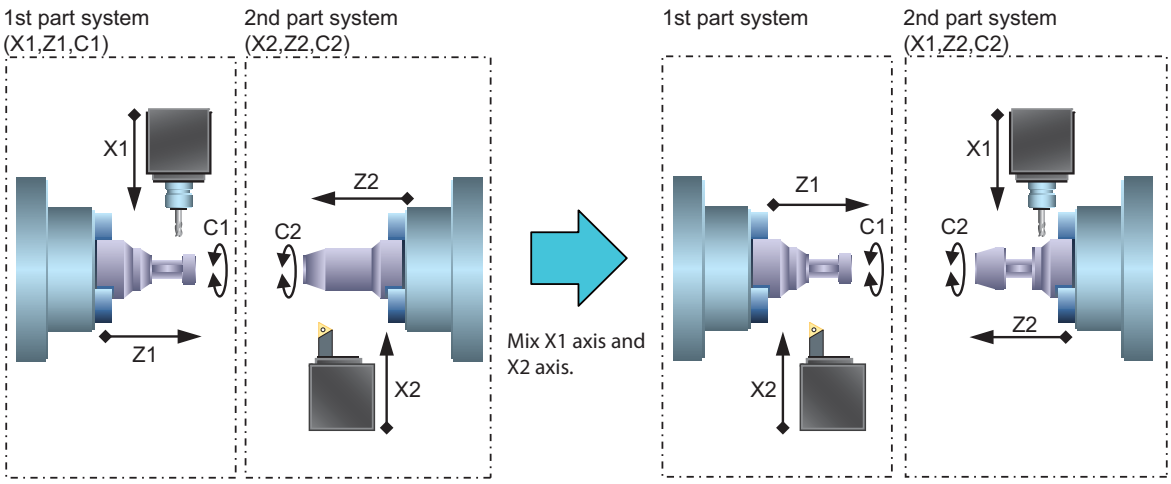


### Command format

**Mixed control (cross axis control) I**

| |
|---|
| **G110 Axis name1 Axis name2 Axis name3 ...;** |

| | |
|---|---|
| Axis name1 Axis name2 Axis name3 ... | All axes which exist in the part system after commanded (axis name set in the parameter "#1022 axname2") |

G110 needs to be commanded for a part system which occurs the existing axis switching (or move) by other part system's G110 command.

## Detailed description

(1) 2-digit axis name

For two or more part systems, the same axis name may exist in each part system. To distinguish the name, display 2-digit axis name set by the parameter "#1022 axname2".

(2) Displaying the switched coordinate value

The basic specification parameter "#1280 ext16/bit2,bit6" can switch the axis name and coordinate value (such as the workpiece coordinate position, and the machine coordinate position).
This parameter can also set the command to move the axis (such as moving C axis of 1st part system to 2nd part system).

Following items are switched for display

| | | |
|---|---|---|
| Operation screen (except restart search) | Counter | Each counter(*), machine status animation |
| | Trace | Each counter(*), display mode, drawing area |
| | Coordinate system | Each coordinate system offset |
| Setup screen | Counter | Each counter(*) |
| | Coordinate system | Each coordinate system offset |

(*) The setting of the basic specification parameter "#1280 ext16/bit6" prevents the displays of machine position counters from being interchanged.

The following is displayed when X axis of 1st part system and X axis of 2nd part system are switched.

(3) G110 command carries out timing synchronization operation until it becomes mixing valid status by other part system's G110 command. On this occasion, "CRS" appears in the operation status of the operation screen to indicate that the machine is in timing synchronization operation by mixed control. After that, mixing completes when the part system to control against all axes to be mixed which relates to that part system, then "CRS" is cleared, and the machining program continues.

## Program example

Initial axis configuration
1st part system: X1, Z1, C1
2nd part system : X2, Z2, C2
3rd part system: Z3

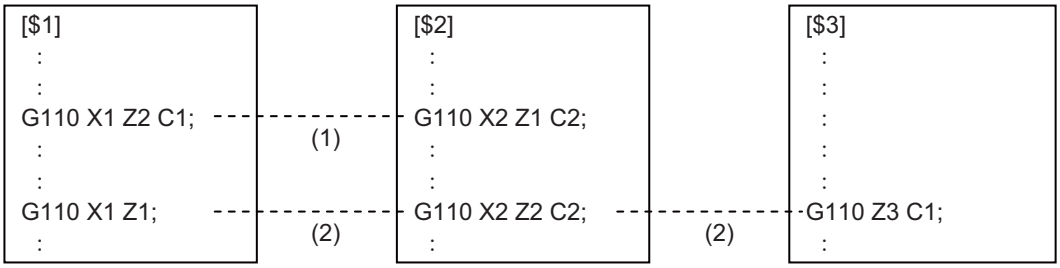


(1) 1st part system and 2nd part system execute timing synchronization operation with each other, and Z1 axis is switched with Z2 axis. Timing synchronization operation is not executed for 3rd part system as all axes of 1st part system and 2nd part system can mix due to 1st part system and 2nd part system's G110 commands.

(2) "1st part system and 2nd part system" and "1st part system and 3rd part system" execute timing synchronization operation with each other. Z1 axis and Z2 axis are replaced to restore the initial state, and move C1 axis to 3rd part system. On this occasion, if G110 command of 2nd part system is executed lastly, 3rd part system does not wait for 2nd part system's G command, and mix 1st part system and C1 axis first and then the program continues.

## Relationship with other functions

(1) Coordinate system

The coordinate information, such as a reference position, machine coordinate zero point and workpiece coordinate zero point, is decided for each axis. Therefore, the coordinate systems are also switched when the axes are switched by the mixed control.

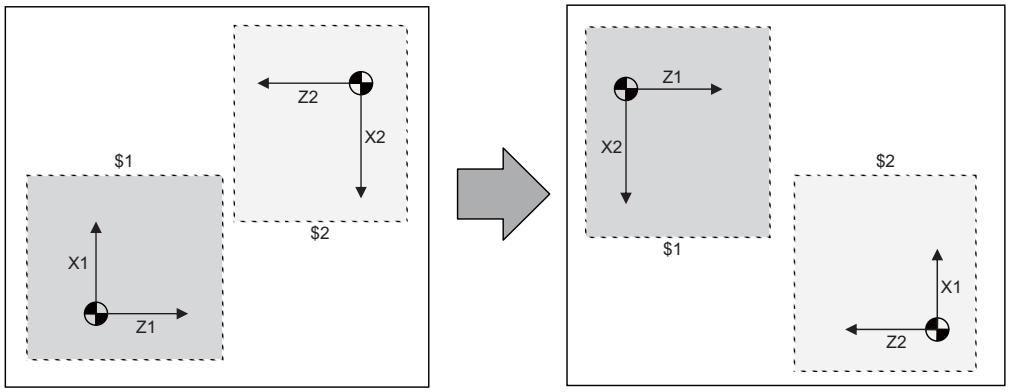


(2) Plane selection

For the part system where the axes are switched by mixed control, the plane is configured with the switched axis. On this occasion, an axis under the mixed control configures the plane with the axis address set by the parameter "#1023 crsadr".

(Example) Suppose the following is set:1st part system axis configuration (X1, Z1, C1, Y1) and 2nd part system axis configuration (X2, Z2, C2)

"#1023 crsadr" of Y1 axis =X

In the above example, the 2nd part system plane configuration is as follows:

| Setting before mixed control | | After mixed control |
|---|---|---|
| "#1026 Parallel axis I"=X<br>"#1027 Parallel axis J"=X<br>"#1028 Parallel axis K"=Z | → Mixing X2 axis and Y1 axis | I-J plane: Y1 axis - Y1 axis (*1)<br>J-K plane: Y1 axis - Z1 axis<br>K-I plane: Z1 axis - Y1 axis |

(*1) This is insignificant as a plane like X2 axis.

When the other part system's axis is moved by the mixed control or when using the plane which includes the axis name never existed before, set the name of "#1023 crsadr" to the parallel axis parameter "#1029 Parallel axis I" to "#1031 Parallel axis K".

(Example) Suppose the following is set:1st part system axis configuration (X1, Z1, C1, Y1) and 2nd part system axis configuration (X2, Z2, C2)

"#1023 crsadr" of Y1 axis = Y

In the above example, when the mixing, such as moving Y axis to 2nd part system, is executed, to configure the plane with Y axis as J direction axis, set the 2nd part system plane configuration parameter as shown below.

"#1030 Parallel axis J"= Y

(3) Tool compensation

When tool compensation is carried out after the axis is switched by the mixed control, the tool compensation is applied to the mixed axis configuration. On this occasion, when two axes whose axes addresses are different are switched is different are switched, the compensation is carried out for the switched axis address.
For example, when Y axis (Y1) in 1st part system is mixed with X axis (X2) in 2nd part system, the compensation amount for X2 axis is applied to Y axis.

(4) Soft limit

Soft limit is carried out using the axis parameter setting value.
Soft limit I and II define the movement range of the axis, and it is valid even during the mixed control. Soft limit IB, IIB, and IC are the range set with two or more axes' parameters setting values, and the range during mixed control is set by the parameter of the then axis configuration.
Therefore, in across part systems where the zero points differ, the setting values of soft limit IB, IIB, and IC need to match for the mixed configuration axis to validate the same area as before mixed even during the mixed control.

(5) Chuck barrier/tailstock barrier

The chuck barrier/tailstock barrier is the tool nose point entry prohibited area of the tool, which is configured with the axis parameter setting value of the 1st axis and 2nd axis. In across part systems where the zero points differ, each parameter needs to be set again to validate the chuck barrier/tailstock barrier after the mixed control.

(6) Rotation center error compensation

Rotation center error compensation can be performed using the axis switched from another part system with the arbitrary axis exchange control command. The operation when both functions are used together depends on the MTB specifications (parameter "#1450 5axis_Spec/bit5"). Refer to "19.3 Rotation center error compensation mode" for details.

## Precautions

### Precautions when commanding

(1) G110 must be commanded alone in a block. A program error (P33) will occur if it is not commanded alone in a block.

(2) All axes that existed before switching in the G110 command need to be commanded by G110 in some part system.

(3) Pairing G110 command performs timing synchronization operation between the part systems.

(4) Mixed control by G110 command is only valid when the parameter "#1280 ext16/bit4" is set to "1". If G110 is commanded when "ext16/bit4" is set to "0", a program error (P610) will occur.

(5) Specify the axis name set in the parameter "#1022 axname2". If the axis name which is not set with axname2 is specified, a program error (P503) will occur.

(6) The axis name specified in G110 needs to be 2 digits. Set the parameter "#1022 axname2" with two digits.

(7) "In mixed control" signal is ON even during the mixed control by G110.

(8) When G110 is commanded and the command part system is in a state where the mixed control is disabled, a program error (P501) will occur.
If mixed control is commanded in a part system in which mixed control is not possible, the operation error (M01 1035) occurs.
Under the following circumstances, the mixed control is disabled:
- In tool nose radius compensation mode
- In polar coordinate interpolation
- In cylindrical interpolation mode
- In balance cut mode
- In fixed cycle machining mode
- In mirror image for facing tool posts
- In constant surface speed control mode
- In hobbing mode
- In axis name switch
- In rotation center error compensation mode

(9) The part system without axis cannot be created with the mixed control. If G110 command without axis name is given, a program error (P33) will occur.

(10) If the number of axes exceeds the maximum control axis for the part system in the G110 command, a program error (P503) will occur.

(11) If G110 is commanded to the part system whose parameter "#1501 polyax" is set other than "0", a program error (P503) will occur.

(12) If switching is commanded with G110 to the axis whose parameter "#2071 s_axis" is set to other than "0", a program error (P503) will occur.

(13) If switching is commanded with G110 to the part system whose parameter "#1205 G0bdcc" is set to other than "0", a program error (P503) will occur.

(14) If switching is commanded with G110 to the axis whose parameter "#1072 chop_ax" is set to other than "0", a program error (P503) will occur.

(15) If switching is commanded with the G110 command to the parameter which is set as a master axis or slave axis for the synchronous control, a program error (P503) will occur.

(16) Mixed control by G110 command is invalid for a graphic check.

(17) If a program restart is performed for G110 command, a program error (P49) will occur.

### Other precautions

(1) A command which duplicates the existing axis and the command address by the mixed control cannot be executed. If this type of command is given, a program error (P11) will occur.

(2) Tool compensation amount holds the value before the mixed control even after the mixed control was carried out. Issue a tool compensation command again or issue a cancel command, if required. Tool compensation command during mixing compensates the tool with the axis configuration of the part system of mixing destination.

(3) 1st axis and 2nd axis of the tool length compensation and the tool nose wear compensation are fixed to 1st axis and 2nd axis of each part system respectively. Thus, if the mixed control which moves 1st axis and 2nd axis to the other part system, the target axes for the tool length compensation and the tool nose wear compensation are changed so that the normal compensation cannot be carried out.

(4) For mixing the diameter axis and radius axis, if the tool compensation is commanded to the radius axis during mixing, only half the value of tool compensation amount which is set to the mixing destination part system is applied. On the contrary, for the diameter axis, the double of the tool compensation amount which is set to the mixing destination part system is applied.

(5) Mixed control is canceled by emergency stop.
However, when the inclined surface modal is retained at emergency stop, the axis exchange status is also retained.

(6) Mixed control is canceled by reset. However, if the parameter "#1280 ext16/bit1" is set to "1", the mixed control state will continue when it is reset.

(7) PLC I/F (Interlock, machine lock, etc.) per axis during switching the axes with the mixed control uses the same device before switching. However, if the parameter "#1280 ext16/bit0" is set to "1", mirror image, machine lock and interlock signal use the device in the command part system side. For moving the axis not switching, PLC signal of the axis No. in the part system is used by following terms:
Set the last axis No. of the source part system for the moved axis.
Set the axis No. in ascending order of destination part system No. at the end of the destination part system for the axes moved from several part systems.
Set the axis No. in axis order of the source part system at the end of the destination part system for the several axes moved from the same part system.

(8) Mixed control is only valid during the automatic operation. If switching 1st part system axis and 2nd part system axis or restore the axes to their original state, both part systems must be in the automatic operation. If an attempt is made to mix axes of the part systems not in the automatic operation, an operation error (M01 1035) will occur.

(9) When the parameter "#1280 ext16/bit1" is invalid (setting to release the mixed control (cross axis control) by reset), if the reset is applied separately for each part system, the part system in mixed control mode keeps waiting for the reset until all the part systems are reset. So, when the mixed control is enabled, all the part systems must be reset simultaneously.

(10) When the inclined surface modal is retained at resetting, the axis exchange status is also retained even if the parameter "#1280 ext16/bit1" is invalid (setting to release the mixed control (cross axis control) by reset). When the part system that retains the inclined surface modal is in mixed control mode, the axis exchange status is retained for all the part systems. To release the mixed control mode, cancel the inclined surface modal, then reset all the part systems in mixed control mode.

## 16.3.2 Arbitrary Axis Exchange ; G140, G141, G142

### Function and purpose

With this function, an arbitrary axis can be exchanged freely across part systems.
The machining can be freer in the multiple part systems by exchanging an axis that can be commanded for machining programs in each part system.
This makes it possible to perform operations which are not possible with regular axis configurations; for instance, tools which are provided only on the 1st part system can be used for machining on the 2nd part system.
When both the arbitrary axis exchange control and mixed control I/II (cross axis control) specifications are valid, if the arbitrary axis exchange control is commanded while the parameter "#1431 Ax_Chg" is set to "0", a program error (P39) will occur.

(Example) Using X1 axis in part system 2

| Before axis exchange | |
|---|---|
| 1st part system (X1, Z1, C1)<br>Machining with the 1st spindle | 2nd part system (X2, Z2, C2)<br>Machining with the 2nd spindle |

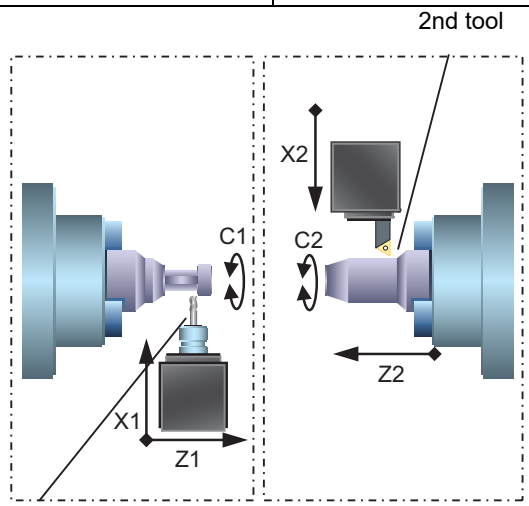


| After axis exchange | |
|---|---|
| 1st part system (Z1, C1)<br>Machining with the 1st spindle | 2nd part system (X1, Z2, C2)<br>Machining with the 2nd spindle |

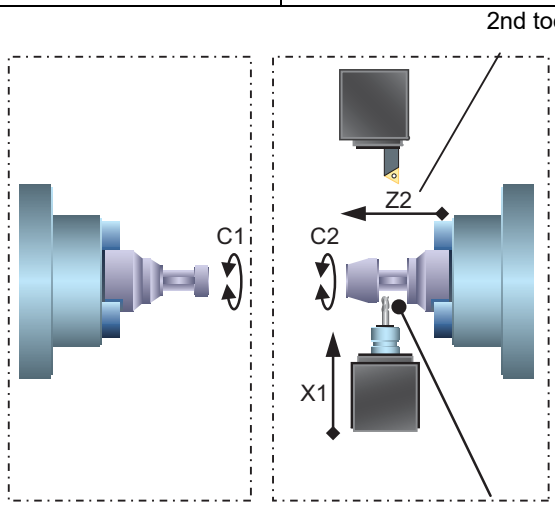


| Machining program<br>1st part system | | Machining program<br>2nd part system | |
|---|---|---|---|
| G140 X=X1 Z=Z1 C=C1;<br>G00 X10.Z-0.1;<br>G01 Z15. F1.5;<br>:<br>!2 L10; | Machining with the 1st spindle and the 1st tool<br><br><br><br><----------> | G140 X=X2 Z=Z2 C=C2;<br>G00 X20. Z12.;<br>G01 X8. F1.5;<br>:<br>!1 L10; | Machining with the 2nd spindle and the 2nd tool |
| | Timing synchronization operation | | Machining with the 2nd spindle and the 2nd tool |
| | | G00 Z-20.;<br>G00 X3.;<br>: | |
| !2 L20; | <----------> | !1L20; | |
| G140 X=X1 Z=Z1 C=C1; | Timing synchronization operation | G140 X=X2 Z=Z2 C=C2; | Machining with the 2nd spindle and the 2nd tool |
| G00 X30.;<br>G00 Z0.;<br>: | Machining with the 1st spindle and the 1st tool | G00 X20. Z5.;<br>G01 X15. F1.5;<br>: | |
| M2; | | M2; | |

This chapter illustrates an example based on the placements of the basis axes below.

| | X axis | Z axis | Y axis | C axis |
|---|---|---|---|---|
| 1st part system ($1) | X1 | Z1 | Y1 | - |
| 2nd part system ($2) | X2 | Z2 | - | C2 |

## Command format

### When commanding the arbitrary axis exchange

**G140 command address = axis address ... ;**

| | |
|---|---|
| Command address | It is a command address used in a movement or other command after arbitrary axis exchange command (G140).<br>Designate the command address with one alphabetical character set to parameters ("#12071 adr_abs[1]"to "#12078 adr_abs[8]") . |
| Axis address | Set the axis name for arbitrary axis exchange.<br>Designate the command with two alphanumeric characters set to the parameter "#1022 axname2". |

### When returning the exchanged axis

| | |
|---|---|
| **G141;** | Arbitrary axis exchange return |

Returns the control right of the axis, exchanged by the previous arbitrary axis exchange command (G140) in the commanded part system, to the state before the axis exchange.

| | |
|---|---|
| **G142;** | Reference axis arrange return |

Returns the control right of the axis, exchanged by the arbitrary axis exchange command (G140) in the commanded part system, to the power-ON state.

## Detailed description

### Arbitrary axis exchange command (G140)

There are two methods for axis exchange operations with arbitrary axis exchange command (G140). The methods for your machine depends on the MTB specifications (parameter "#1434 G140Type2").

| Method | Operation |
|---|---|
| Method for exchanging all axes ("#1434 G140Type2" = 0) | Designates axes to be used in the part system with a command address. The command addresses axes that are not designated will be released as uncontrol axes. |
| Method for exchanging command axes ("#1434 G140Type2" = 1) | Designates axes to be used in the part system with a command address. The command addresses axes that are not designated will maintain the current state. |

(1) Operation example of the method for exchanging all axes ("#1434 G140Type2" is set to "0")

Below is the control axis of each part system when running the following machining programs (1st part system, 2nd part system)

| $1 Machining program | $2 Machining program | Control axes $1 X | Control axes $1 Z | Control axes $1 Y | Control axes $2 X | Control axes $2 Z | Control axes $2 C | Uncontrol axes |
|---|---|---|---|---|---|---|---|---|
| G140 X=X1 Z=Z1 Y=Y1; (a)<br>G00 X10.;<br>G01 X5. F1;<br>: | G140 X=X2 Z=Z2 C=C2; (d)<br>G00 X20.;<br>G01 X15. F2;<br>: | X1 | Z1 | Y1 | X2 | Z2 | C2 | - |
| G140 X=X1 Z=Z2; (b)<br>G00 Z25.;<br>G01 X8. F2;<br>: | | X1 | Z2 | - | X2 | - | C2 | Z1<br>Y1 |
| | G140 Z=Y1; (e)<br>G00 Z10.;<br>G01 Z8. F0.05;<br>: | | | | - | Y1 | - | Z1<br>X2<br>C2 |
| G140 X=X1 Z=Z1 Y=Y1; (c)<br>G00 X20. Z15.;<br>G01 X15. F5;<br>: | | X1 | Z1 | Y1 | - | - | - | X2<br>Z2<br>C2 |
| | G140 X=X2 Z=Z2 C=C2; (f)<br>G00 X0;<br>: | | | | X2 | Z2 | C2 | - |

| | | |
|---|---|---|
| 1st part system ($1) | (a), (c) | Declares the use of X1 axis, Z1 axis and Y1 axis. |
| | (b) | Declares the use of X1 axis and Z2 axis.<br>The control right of Z2 axis shifts to the 2nd part system from the 1st part system.<br>Y1 axis which was not designated and Z1 axis which was exchanged for Z2 axis will be uncontrol axes. |
| 2nd part system ($2) | (d), (f) | Declares the use of X2 axis, Z2 axis and C2 axis. |
| | (e) | Declares the use of Y1 axis.<br>X2 axis and C2 axis which were not designated will be uncontrol axes. |

(2) Operation example of the method for exchanging command axes ("#1434 G140Type2" is set to "1")

Below is the control axis of each part system when running the following machining programs (1st part system, 2nd part system)

| $1 Machining program | $2 Machining program | Control axes $1 X | Control axes $1 Z | Control axes $1 Y | Control axes $2 X | Control axes $2 Z | Control axes $2 C | Uncontrol axes |
|---|---|---|---|---|---|---|---|---|
| G140 X=X1 Z=Z1 Y=Y1; (a)<br>G00 X10.;<br>G01 X5. F1;<br>: | G140 X=X2 Z=Z2 C=C2; (d)<br>G00 X20.;<br>G01 X15. F2;<br>: | X1 | Z1 | Y1 | X2 | Z2 | C2 | - |
| G140 Z=Z2; (b)<br>G00 Z25.;<br>G01 X8. F2;<br>: | | X1 | Z2 | Y1 | X2 | - | C2 | Z1 |
| | G140 Z=Z1; (e)<br>G00 Z10.;<br>G01 Z8. F0.05;<br>: | | | | X2 | Z1 | C2 | - |
| G140 Z=Z1 ; (c)<br>G00 X20. Z15.;<br>G01 X15. F5;<br>: | | X1 | Z1 | Y1 | X2 | - | C2 | Z2 |
| | G140 X=X2 Z=Z2 C=C2; (f)<br>G00 X0;<br>: | | | | X2 | Z2 | C2 | - |

| | | |
|---|---|---|
| 1st part system ($1) | (a) | Declares the use of X1 axis, Z1 axis and Y1 axis. |
| | (b) | Declares the use of Z2 axis.<br>The control right of Z2 axis shifts to the 2nd part system from the 1st part system.<br>Z1 axis which was exchanged for Z2 axis will be an uncontrol axis. |
| | (c) | Declares the use of Z1 axis.<br>The control right of Z1 axis shifts to the 2nd part system from the 1st part system.<br>Z2 axis which was exchanged for Z1 axis will be an uncontrol axis. |
| 2nd part system ($2) | (d) | Declares the use of X2 axis, Z2 axis and C2 axis. |
| | (e) | Declares the use of Z1 axis. |
| | (f) | Declares the use of X2 axis, Z2 axis and C2 axis. |

### Arbitrary axis exchange return command (G141)

The arbitrary axis exchange return command (G141) returns the control right of the axis, exchanged by the previous arbitrary axis exchange command (G140) in the commanded part system, to the state before the axis exchange. However, it is the axis that remains an uncontrol axis by the arbitrary axis exchange return command (G140) that returns the control right to the part system which was commanded the arbitrary axis exchange return command (G141).
In other words, when the control right of an axis shifts by the arbitrary axis exchange command (G140) of other part systems, it is possible to return the control right of the axis to the state before the arbitrary axis exchange command (G140) by issuing the arbitrary axis exchange return command (G141) in the part system which was commanded the arbitrary axis exchange (G140). Therefore,if this command is used, it will not be necessary to issue the arbitrary axis exchange command (G140) in the part system to which the control right of the axis shifted by the arbitrary axis exchange command (G140) of other part systems.

(Example)

| $1<br>Machining program | | Control axes | | | | | Uncontrol axes |
|---|---|---|---|---|---|---|---|
| | | $1 | | | $2 | | |
| | | X | Z | Y | X | Z | |
| : | | X1 | Z1 | Y1 | X2 | Z2 | - |
| G140 X=X2 Z=Z2 Y=Y1;<br>:<br>: | - (a) -> | X2 | Z2 | Y1 | - | - | X1<br>Z1 |
| G141;<br>: | - (b) -> | X1 | Z1 | Y1 | X2 | Z2 | - |

| | | |
|---|---|---|
| (a) | X1 axis, Z1 axis | Releases as uncontrol axis. |
| | Y1 axis | Declares the use in the 1st part system.<br>(The control right does not move.) |
| | X2 axis, Z2 axis | Declares the use in the 1st part system.<br>(The control right moves to the 2nd part system from the 1st part system) |
| (b) | X1 axis, Z1 axis | The control right returns to the 1st part system. |
| | Y1 axis | Stays with the 1st part system.<br>(The control right does not move.) |
| | X2 axis, Z2 axis | The control right returns to the 1st part system from the 2nd part system. |

## Reference axis arrange return command (G142)

Reference axis arrange return command (G142) returns the control right of the axis, exchanged by the arbitrary axis exchange command (G140) in the commanded part system, to the power-ON state.
Executing the arbitrary axis exchange command (G140) multiple times may make it impossible to return the control right of the axis to the reference axis arrange with the arbitrary axis exchange return command (G141). If this happens, execute the reference axis arrange return command (G142) in the part system to be returned to the reference axis arrange, and the control right of the axis will return to the state when the power was turned ON.
Therefore, if you use this command, you will not need to designate the reference axis with the arbitrary axis exchange command (G140).

(1) Basic operations of the reference axis arrange return command (G142)

Control axes of each part system when running the following machining are as below.

| $1 Machining program | $2 Machining program | Control axes | | | | | | Uncontrol axes |
|---|---|---|---|---|---|---|---|---|
| | | $1 | | | $2 | | | |
| | | X | Z | Y | X | Z | C | |
| :<br>!2 L10; | :<br>!1 L10; | X1 | Z1 | Y1 | X2 | Z2 | C2 | - |
| G140 X=X1 Z=Z2 Y=Y1; (a)<br>G00 X10.;<br>G01 X5. F1;<br>:<br>!2 L20; | G140 Z=Z1; (d)<br>G00 Z5.;<br>:<br>:<br>!1 L20; | X1 | Z2 | Y1 | - | Z1 | - | X2<br>C2 |
| G140 X=X2 Z=Z2 Y=C2; (b)<br>G00 Z25.;<br>G01 X8. F2;<br>:<br>!2 L30; | G140 X=X1 C=Y1; (e)<br>G01 X15. F2;<br>G00 C10.<br>:<br>!1 L30; | X2 | Z2 | C2 | X1 | - | Y1 | Z1 |
| G142; (c)<br>G00 X20. Z15.;<br>G01 X15. F5;<br>: | G142; (f)<br>G00 X10. C15.<br>:<br>: | X1 | Z1 | Y1 | X2 | Z2 | C2 | - |

| | | |
|---|---|---|
| 1st part system ($1) | (a) | Declares the use of X1 axis, Z2 axis and Y1 axis. |
| | (b) | Declares the use of X2 axis, Z2 axis and C2 axis.<br>At this time, the command address of C2 axis is "Y". |
| | (c) | Returns the 1st part system to the reference axis arrange. |
| 2nd part system ($2) | (d) | Declares the use of Z1 axis. |
| | (e) | Declares the use of X1 axis and Y1 axis.<br>At this time, the command address of Y1 axis is "C". |
| | (f) | Returns the 2nd part system to the reference axis arrange. |

(2) When the arbitrary axis exchange return command (G141) is executed after the reference axis arrange return command (G142)

When the arbitrary axis exchange return command (G141) is executed after the part system is returned to the reference axis arrange by the reference axis arrange return command (G142), the axis arrangement will return to the state that existed before the reference axis arrange return command (G142) was executed.

### Unavailable state of axis exchange

"Unavailable state of axis exchange" indicates a "condition in which a target axis for axis exchange is not available for exchange because the designated target axis for axis exchange is being used by other part systems or for other reasons" through the arbitrary axis exchange command (G140), the arbitrary axis exchange return command (G141), the reference axis arrange return command (G142).
When the conditions for unavailable state of axis exchange fall through, no axis exchange mode will be cancelled. It will be cancelled when a reset signal or emergency stop is entered.

The following is the conditions in which the target axis for axis exchange enters the unavailable state of axis exchange.

(1) Conditions under " the arbitrary axis exchange command (G140), the arbitrary axis exchange return command (G141), the reference axis arrange return command (G142)

| Applied to | Conditions |
|---|---|
| Part system which contains the target axis for axis exchange | Part system containing the target axis for axis exchange is in the following mode.<br>•In cylindrical interpolation mode<br>•In polar coordinate interpolation<br>•In milling interpolation<br>•In thread Cutting<br>•In constant surface speed control<br>•In tool nose radius compensation mode<br>•In tool radius compensation mode (*1)<br>•In reference position return<br>•In tool change position return<br>•In NC reset<br>•In feed hold<br>•In scaling (*1)<br>•In axis name switch<br>•In fixed cycle for drilling<br>•In fixed cycle for turning machining<br>•In compound type fixed cycle<br>•In special fixed cycle mode (*1)<br>•In mirror image for facing tool posts<br>•In coordinate rotation<br>•In balance cut<br>•In multi-part system simultaneous thread cutting cycle<br>•In direct command mode<br>•In chuck/tailstock barrier check<br>•In stroke check before travel<br>•In inclined axis control mode<br>•In tool center point control mode (*1)<br>•In inclined surface machining mode<br>•In workpiece installation error compensation mode (*1)<br>•In tool length compensation along the tool axis mode (*1)<br>•In simple tool center point control mode<br>•In simple inclined surface control mode<br>•In rotation center error compensation mode<br>•At activation of sub part system<br>•Resetting sub part system<br>•NC alarm 4 signal ON in manual operation mode<br>•NC alarm 5 signal ON in manual operation mode<br>•In hypothetical axis interpolation mode (*1)<br>•In NURBS interpolation mode (*1)<br>•In tool retract and return (*1)<br>•In figure rotation (*1)<br>•In polar coordinate command (*1)<br>•In normal line control (*1)<br>•In circular cutting mode<br>•In variable-acceleration pre-interpolation acceleration/deceleration mode (*1)<br>•In R-Navi mode (*1)<br>•In 3-dimensional tool radius compensation (Tool's vertical-direction compensation) mode (*1)<br>•In interference check III alarm (Operation error (M03 0001, 0002, 0003)) |

| Applied to | Conditions |
|---|---|
| Part system which contains the target axis for axis exchange | In the part system which contains the target axis for axis exchange, any of the following commands is programmed in the next block of the timing synchronization.<br>♦Reference position return (G28, G30)<br>♦Unidirectional positioning (*1)<br>♦3-dimensional circular interpolation (*1)<br>♦Corner chamfering/Corner R<br>♦Variable commands (Tool management, and API section and sub-section Nos. input/output by program) |
| Target axis for axis exchange | Target axes for axis exchange are in the following conditions.<br>♦In movement (If there is remaining commands, the axis is assumed to be in movement even during the interlock). A movement command in the machine lock status is considered to be in movement.)<br>♦While a part system containing the target axis for axis exchange is executed, the next block of the machining program commands movement to the axis to be exchanged<br>♦Rotary axis in hobbing control<br>♦In C axis zero point return in the spindle/C axis function<br>♦In 3-dimensional tool radius compensation (Tool's vertical-direction compensation) (*1) |

(*1) These are functions of the machining center system.

(2) Conditions under the arbitrary axis exchange return command (G141)

| Applied to | Conditions |
|---|---|
| Command part system and target axes for axis exchange | The other axis is allocated to the command address to which the control right of the axis is moved by the arbitrary axis exchange control command (G141).<br>(Example)<br>Machining program: $1 / $2<br>: / :<br>G140 X=X2 Z=Z2; → :<br>: / :<br>: / G140 X=A1; →<br>G141; → :<br>Control Axis: $1 (X, Z) / $2 (X, Z) / $3 (X, Z) / Uncontrol Axis<br>X1 Z1 X2 Z2 / A1 A2 / -<br>X2 Z2 / - - / A1 A2 / X1,Z1<br>As A1 axis is in the location to which X2 axis is returning,the unavailable state of axis exchange occurs. |
| Command part system | When the arbitrary axis exchange return (G141) is commanded, axis exchange is running in the part system to which the control right of axis returns through the arbitrary axis exchange command (G140), the arbitrary axis exchange return command (G141) or the reference axis arrange return command (G142).<br>Part systems below are regarded as running.<br>♦Part system that executes the arbitrary axis exchange command (G140) after waiting for the completion of the axis movement.<br>♦Part system that waits until axis exchange is activated and executed the arbitrary axis exchange return command (G141).<br>(Example)<br>Machining program: $1 / $2<br>: / :<br>G140 X=X2 Z=Z2; → :<br>: / :<br>!2; / !1;<br>G141; / G140 Y=A1; →<br>Control Axis: $1 (X, Z) / $2 (X, Z) / $3 (X) / Uncontrol Axis<br>X1 Z1 X2 Z2 / A1 / -<br>X2 Z2 / - - / A1 / X1,Z1<br>As the arbitrary axis exchange command is being executed in the 2nd part system when the command is given to return X2 axis and Z2 axis to the 2nd part system, the unavailable state of axis exchange occurs. |

<table>
<tr><th>Applied to</th><th>Conditions</th></tr>
<tr><td rowspan="2">Target axis for axis exchange</td><td>After the axis was exchanged/acquired by the arbitrary axis exchange command (G140), the arbitrary axis exchange return command (G141) was executed with the axis pulled out by the arbitrary axis exchange command (G140) or the reference axis arrange return command (G142).<br>(Example)<br>
<table>
<tr><th colspan="2">Machining program</th></tr>
<tr><td>$1</td><td>$3</td></tr>
<tr><td>:<br>G140 X=X2 Z=Z2;<br>:<br>G141;</td><td>:<br>:<br>G140 X=X2;<br>:</td></tr>
</table>
<table>
<tr><th colspan="6">Control Axis</th><th rowspan="3">Uncontrol Axis</th></tr>
<tr><th colspan="2">$1</th><th colspan="2">$2</th><th>$3</th></tr>
<tr><th>X</th><th>Z</th><th>X</th><th>Z</th><th>X</th></tr>
<tr><td>X1</td><td>Z1</td><td>X2</td><td>Z2</td><td rowspan="2">A1</td><td>-</td></tr>
<tr><td>X2</td><td>Z2</td><td rowspan="2">-</td><td rowspan="2">-</td><td>X1,Z1</td></tr>
<tr><td>-</td><td>Z2</td><td>X2</td><td>X1,Z1,A1</td></tr>
</table>
As X2 axis which was exchanged with the last arbitrary axis exchange return command (G141) belongs to the other part system (3rd part system), the unavailable state of axis exchange occurs.</td></tr>
<tr><td>The axis exchange return command (G141) was executed while the axis returning the control right to the arbitrary axis exchange return command (G141) part system has the control right in other part systems.<br>(Example)<br>
<table>
<tr><th colspan="2">Machining program</th></tr>
<tr><td>$1</td><td>$2</td></tr>
<tr><td>:<br>G140 X=X1;<br>:<br>:<br>G141;</td><td>:<br>:<br>:<br>G140 Z=Z1;<br>:</td></tr>
</table>
<table>
<tr><th colspan="4">Control Axis</th><th rowspan="3">Uncontrol Axis</th></tr>
<tr><th colspan="2">$1</th><th colspan="2">$2</th></tr>
<tr><th>X</th><th>Z</th><th>X</th><th>Z</th></tr>
<tr><td>X1</td><td>Z1</td><td rowspan="2">X2</td><td rowspan="2">Z2</td><td>-</td></tr>
<tr><td rowspan="2">X1</td><td rowspan="2">-</td><td>Z1</td></tr>
<tr><td>-</td><td>Z1</td><td>X2,Z2</td></tr>
</table>
As Z1 axis which returns the control right to the 1st part system is in control in the other part system (2nd part system), the unavailable state of axis exchange occurs.</td></tr>
</table>

**Note**

- For the unavailable state of axis exchange in manual operation, refer to " sub part system control function, refer to "Relation with other functions" and "Manual operation".

## Operations in the unavailable state of axis exchange

When the arbitrary axis exchange command (G140), the arbitrary axis exchange return command (G141), or the reference axis arrange return command (G142) is executed in the unavailable state of axis exchange, the operations will be as follows, depending on the MTB specifications (combination of the setting of parameters "#1432 Ax_Chg_Spec/bit0" and "#1433 G140TimeOut").

| #1432 Ax_Chg_Spec/bit0 | #1433 G140TimeOut | Operation |
|---|---|---|
| 1 | - | Operation error "M01 1101" will occur.<br>When axis exchange is activated, the error will be canceled and the axis will be exchanged. |
| 0 | 255 | Waits until axis exchange is activated.<br>When axis exchange is activated, the axis will be exchanged. |
| 0 | 0 - 254(s) | When TIME-OUT SET has elapsed, the operation error (M01 1101) occurs.<br>When axis exchange is activated, the error will be cancelled and the axis will be exchanged. |

When the conditions for unavailable state of axis exchange fall through, no axis exchange mode will be cancelled. It will be canceled when a reset signal or emergency stop is entered.

### Caution to be observed on coordinate systems

The machine specific zero point and the reference point of each axis are not changed by the arbitrary axis exchange command (G140).
Coordinate system zero point of each axis does not change as the workpiece coordinate system/local coordinate system are based on he machine zero point.
However, when we look at these points on the X-Z plane as shown in the figure below, the coordinate system zero point of each part system is changed by the arbitrary axis exchange command (G140).

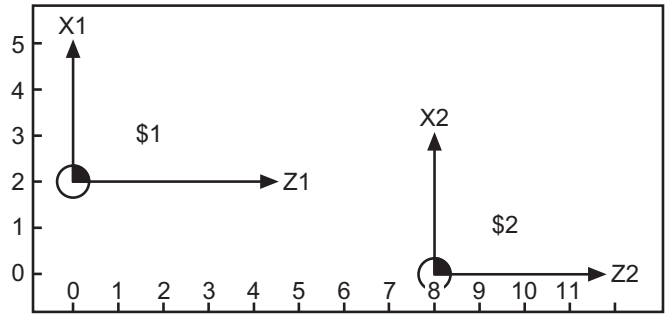


1st part system ($1): X1 Z1
2nd part system ($2): X2 Z2

Arbitrary axis exchange command
$1: G140 X=X1 Z=Z2 ;
$2: G140 X=X2 Z=Z1 ;
(Switching Z1 and Z2)

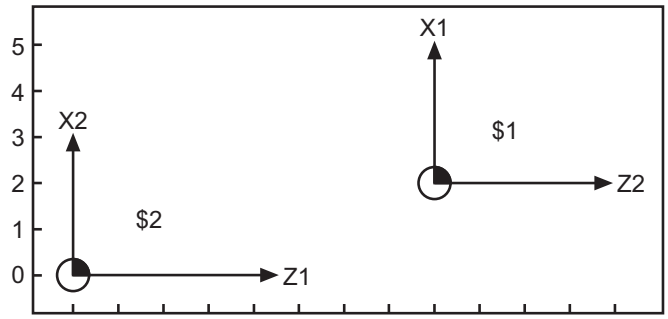


1st part system ($1): X1 Z2
2nd part system ($2): X2 Z1

Therefore, the workpiece coordinate system/local coordinate system for programming may be different from the coordinate system that programmers request with the arbitrary axis exchange command. In that case, execute the coordinate system command after the arbitrary axis exchange command (G140), and create a new coordinate system.

## Program example

### Example of the arbitrary axis exchange command (G140)

(1) Creating a machining program for a single part system only

| $1<br>Machining program | |
|---|---|
| G140 X=X1 Z=Z1 Y=Y1;<br>G00 X10.;<br>G01 X3. F2;<br>: | Machining that uses the axis of the 1st part system |
| G140 X=Y1 Z=Z1 Y=X1;<br>G00 X10.;<br>G01 X3. F2;<br>: | Machining that uses the axis of the 1st part system<br>(Exchanges the command addresses of X1 and Y1.) |
| G140 X=X2 Z=Z2 C=C2;<br>G00 Z25.;<br>G00 X10.;<br>G00 C20.;<br>:<br>M2; | Machining that uses the axis of the 2nd part system |

(2) Creating a machining program for multiple part systems

The arbitrary axis exchange control exchanges axes if the declared axis is available for exchange. As a result, it may lose the control right of the axis during machining, depending on the timing.

To avoid this, command the timing synchronization operation in the range where you do not want to lose the control right of the axis.

| $1<br>Machining program | | $2<br>Machining program | |
|---|---|---|---|
| G140 X=X1 Z=Z1 Y=Y1; | Acquires the control right of X1, Z1 and Y1 axes | G140 X=X2 Z=Z2 C=C2; | Acquires the control right of X2, Z2 and C2 axes |
| G00 X10.;<br>G01 X3. F2.;<br>:<br>!2 L10; | Range that needs the control right of X1, Z1 and Y1 axes<br><----------><br>Timing synchronization operation | G00 X5.;<br>G01 X8. F0.5;<br>:<br>!1 L10; | Range that needs the control right of X2, Z2 and C2 axes |
| G140 X=X2 Z=Z1 C=C2; | Acquires the control right of X2, Z1 and C2 axes | | |
| G00 C50.;<br>G00 X15. Z30.;<br>:<br>!2 L20; | Range that needs the control right of X2, Z1 and C2 axes<br><----------><br>Timing synchronization operation | :<br>!1 L20; | |
| G00 X12. Z50.; | Range that needs the control right of X2 and Z1 axes | G140 C=C2; | Acquires the control right of C2 axis |
| G01 X5.5 F2.5;<br>:<br>:<br>!2 L30; | <----------><br>Timing synchronization operation | G00 C180.;<br>:<br>:<br>!1 L30; | Range that needs the control right of C2 axis |
| G00 X15.; | | G140 X=X2; | Acquires the control right of X2 axis |
| G01 X6.5 F3.;<br>:<br>:<br>!2 L40; | Range that needs the control right of X2 axis<br><----------><br>Timing synchronization operation | G00 X10.;<br>G01 X3.5 F1.5;<br>:<br>!1 L40; | Range that needs the control right of X2 axis |
| M2; | | G140 X=X2 Z=Z2 C=C2; | Acquires the control right of X2, Z2 and C2 axes |
| | | G00 Z25.;<br>G01 X3.5 F1.5;<br>:<br>M2; | Range that needs the control right of X2, Z2 and C2 axes |

### Example of the arbitrary axis exchange return command (G141)

(1) Using the arbitrary axis exchange return command (G141)

| $1<br>Machining program | | $2<br>Machining program | |
|---|---|---|---|
| G140 X=X1 Z=Z1 Y=Y1;<br>G00 X10.;<br>:<br>: | Timing synchronization operation | G140 X=X2 Z=Z2 C=C2;<br>:<br>:<br>: | Machining that uses the axis of the 2nd part system |
| !2 L10; | <----------> | !1 L10; | |
| G140 X=X2 Z=Z2 C=C2;<br>G00 Z50.;<br>G00 X12.;<br>G01 X5.5 F2.5;<br>:<br>: | Machining that uses the axis of the 2nd part system | :<br>:<br>:<br>:<br>:<br>: | |
| G141; | Returning the axis of the 2nd part system | : | |
| !2 L20; | <----------> | !1 L20; | |
| | Timing synchronization operation | | |
| M2; | | :<br>G04 X1.;<br>G00 Z25.;<br>G00 X10.;<br>G01 X3.5 F1.5;<br>G00 C20.<br>:<br>M2; | Machining that uses the axis of the 2nd part system |

### Example of the reference axis arrange return command (G142)

(1) Using the reference axis arrange return command (G142)

| $1<br>Machining program | | $2<br>Machining program | |
|---|---|---|---|
| G140 X=X1 Z=Z1 Y=Y1;<br>G00 X10.;<br>: | Timing synchronization operation | G140 X=X2 Z=Z2 C=C2;<br>:<br>: | Machining that uses the axis of the 2nd part system |
| !2 L10; | <----------> | !1 L10; | |
| G140 X=X2 Z=Z2 C=C2;<br>G00 Z50.;<br>G00 X12.;<br>G01 X5.5 F2.5;<br>: | Machining that uses the axis of the 2nd part system | | |
| !2 L20; | <----------> | !1 L20; | |
| G142; | Restoring the reference axis arrange | G142; | |
| G00 X10.;<br>G00 Z25.;<br>G01 X12.5 Z30. F2.5;<br>:<br>M2 | Machining that uses the axis of the 1st part system | G00 X3.;<br>G01 Z40. F3.;<br>G00 X7.Z35.;<br>:<br>M2 | Machining that uses the axis of the 2nd part system |

## Relationship with other functions

### Plane selection

For the part system where the axes are switched by the arbitrary axis exchange command (G140), the arbitrary axis exchange return command (G141) or the reference axis arrange return command (G142), the plane is configured with the switched axis.
The axis being exchanged configures the plane at the axis addresses set in parameters ("#12071 adr_abs[1]"to "#12078 adr_abs[8]") .

| # | Item | 1st part system | 2nd part system |
|---|---|---|---|
| 1026 | Basis axis I | X | X |
| 1027 | Basic axis J | Y | X |
| 1028 | Basic axis K | Z | Z |
| 12071 | adr_abs[1] | X | X |
| 12072 | adr_abs[2] | Z | Z |
| 12073 | adr_abs[3] | Y | Y |
| 12074 | adr_abs[4] | C | C |

When the parameters are set as above, the axes will be configured as shown in the table blow.

| | When the following command is issued in the 1st part system<br>G140 X=Y1 Y=X2 Z=Z1 | When the following command is issued in the 2nd part system<br>G140 X=Y1 Y=X2 Z=Z1 |
|---|---|---|
| I axis | Y1 axis | Y1 axis |
| J axis | X2 axis | Y1 axis |
| K axis | Z1 axis | Z1 axis |
| I-J plane | Y1-X2 axis | Y1-Y1 axis (insignificant as a plane) |
| J-K plane | X2-Z1 axis | Y1-Z1 axis |
| K-I plane | Z1-Y1 axis | Z1-Y1 axis |

When you need to move the other part system's axis by the arbitrary axis exchange, and to use the plane with the built-in axis name which did not exist before, set the same axis address as the parameter ("#12071 adr_abs[1]" to "#12078 adr_abs[8]") for the parallel axis parameter (#1028 parallel axis I to #1030 parallel axis K).

### Tool compensation

(1) When tool compensation is carried out after the axis is switched by the arbitrary axis exchange control, the tool compensation is applied to the mixed axis configuration. On this occasion, when two axes whose axes addresses are different are switched is different are switched, the compensation is carried out for the switched axis address.

(2) Tool compensation command during axis exchange compensates the tool with the axis configuration of the part system of mixing destination.

(3) 1st axis and 2nd axis of the tool length compensation and the tool nose wear compensation are fixed to 1st axis and 2nd axis of each part system respectively.

(4) Thus, if the arbitrary axis exchange command (G140) which moves the 1st axis and 2nd axis of each part system to other part systems is issued, the target axes for the tool length compensation and the tool nose wear compensation are changed, and the normal compensation cannot be carried out.
Execute the arbitrary axis exchange command (G140) so that axes that require offset will be assigned to the first axis and the second axis.

(5) For switching the diameter axis and the radius axis, if tool compensation is commanded to the axis during axis exchange, the normal compensation cannot be carried out because the compensation amount set for the diameter axis becomes valid for the position command of the radius axis, and the compensation amount set for the radius axis becomes valid for the position command of the diameter axis.

(6) Tool compensation amount holds the value before the arbitrary axis exchange even after the arbitrary axis exchange control is carried out. Issue a tool compensation command again or issue a cancel command, if required.

(7) Whether the tool length compensation/wear compensation is canceled after axis exchange depends on the MTB specifications (parameter "#1432 Ax_Chg_Spec/bit1").

### Resetting

Depending on the MTB specifications (parameter "#1280 ext16/bit1"), the axis of the part system that was reset will be returned to the reference axis arrange or remain in the condition after the axis exchange.

(1) When the parameter is invalid ("#1280 ext16/bit1" is set to "0")

Return the axis of the part system that was reset to the reference axis arrange.
However, depending on the type (regular part system, sub part system control I, sub part system control II) of the part system, the axis arrange after resetting will be as follows.

| Type of part system | Axis arrange after resetting |
|---|---|
| Regular part system | Reference axis arrange |
| Sub part system control I | Reference axis arrange |
| Sub part system control II | All axes Uncontrol Axes |

(2) When the parameter is valid ("#1280 ext16/bit1" is set to "1")

Remains in the condition after the axis exchange.
However, depending on the type (regular part system, sub part system control I, sub part system control II) of the part system, the axis arrange after resetting will be as follows.

| Type of part system | Axis arrange after resetting |
|---|---|
| Regular part system | Axis arrange after axis exchange |
| Sub part system control I | Axis arrange after axis exchange |
| Sub part system control II | All axes Uncontrol Axes |

### Manual operation

(1) Manual operation for the axis during axis exchange and the operations of manual interruption depends of the MTB specifications (parameter "#1435 crsman").

(a) When the parameter is invalid ("#1435 crsman" is set to "0")

Manual operation is possible only when the axis to be operated manually is in the reference axis arrange.

| | 1st part system | 2nd part system |
|---|---|---|
| Reference axis arrange | X1 Z1 C1 | X2 Z2 |
| After the arbitrary axis exchange command | X2 Z1 C1 | X1 Z2 |

In the case above, if manual operation is carried out for the axis in the 2nd part system after the axis exchange, Z2 axis in the reference axis arrange can be moved. However, X1 axis cannot be move as it is not in the reference axis arrange.
If the axis selected by manual operation is not in the reference axis arrange, the operation error (M01 1102) will occur. When the axis returns to the reference axis arrange, select it again.
The timing at which the operation error (M01 1102) occurs is as follows, depending on each manual operation mode.

| Manual operation mode | Alarm generation timing |
|---|---|
| Jog | When the axis is selected |
| Handle | When the axis is selected and enabled |
| Arbitrary feed in manual mode 1 | When the axis is selected and enabled |

(b) When the parameter is valid ("#1435 crsman" is set to "1")

Even when the axis for manual operation is not in the reference axis arrange, manual operation can be carried out.

However, the method for selecting the axis to be moved by manual operation varies depending on each manual operation mode.

| Manual operation mode | Part system selecting manual operation mode | Axis selection method |
|---|---|---|
| Jog | Part system containing the axis to be moved | Selects the feed axis in the reference axis arrange |
| Handle | Part system containing the axis to be moved | Selects the axis number in the reference axis arrange within the part system |
| Arbitrary feed in manual mode 1 | Basic definition part system of the axis to be moved | Selects the axis number in the reference axis arrange within the part system |

(2) When issuing the arbitrary axis exchange to the axis of the part system in manual operation mode

The arbitrary axis exchange command (G140), the arbitrary axis exchange return command (G141), the reference axis arrange return command (G142) can be issued to the axis in manual operation mode from other part systems.

However, if a command is issued in manual operation mode to a part system where the operation alarm is going off, it is impossible to exchange axes.

<Note>

- Even when the operation error has not occurred, axes cannot be exchanged when axis exchange is not available. Refer to "Unavailable state of axis exchange" for details of unavailability of axis exchange.

(3) When the manual automatic simultaneous valid axis is the axis to be exchanged in the part system

If a moving axis specified as the axis to be exchanged in the part system , axis exchange will be impossible and the operation error (M01 1101) will occur.

The operation error (M01 1101) that occurs in this unavailable state of axis exchange does not rely on the settings of the parameter ("#1432 Ax_Chg_Spec/bit1", "#1433 G140TimeOut") (This error always occurs.)

When the moving axis stops, the operation error (M01 1101) will be cancelled and axis exchange will be carried out.

## Mixed control I/II

Mixed control I/II cannot be commanded in conjunction with the arbitrary axis exchange command (G140), the arbitrary axis exchange return command (G141) or the reference axis arrange return command (G142).

Whether to enable the mixed control or the arbitrary axis control depends on the MTB specifications (parameter "#1431 Ax_Chg)").

If the arbitrary axis exchange command (G140), the arbitrary axis exchange return command (G141) or the reference axis arrange return command (G142) is issued while the mixed control I/II is valid, the program error (P39) will occur.

### Sub part system control I/II

(1) The axis arrange of the sub part system when turning ON the power, when resetting, when issuing the reference axis arrange return command (G142) or when terminating the sub part system depends on the MTB specifications (parameter "#1280 ext16/bit1").

| #1280 ext16/bit1 | Conditions | Axis arrange of sub part system (Sub part system control I) | Axis arrange of sub part system (Sub part system control II) |
|---|---|---|---|
| 0 (Restores the reference axis arrange) | At power ON | Reference axis arrange | All axes Uncontrol Axes |
| | When resetting | Reference axis arrange | All axes Uncontrol Axes |
| | When issuing the reference axis arrange return command (G142) | Reference axis arrange | Reference axis arrange |
| | When terminating the sub part system | Reference axis arrange | All axes Uncontrol Axes |
| 1 (Does not restore the reference axis arrange) | At power ON | Reference axis arrange | All axes Uncontrol Axes |
| | When resetting | Axis arrange after axis exchange | All axes Uncontrol Axes |
| | When issuing the reference axis arrange return command (G142) | Reference axis arrange | Reference axis arrange |
| | When terminating the sub part system | Axis arrange after axis exchange | All axes Uncontrol Axes |

(2) When the reference axis arrange return command (G142) is issued in the sub part system control II, the basic configuration axis of the sub part system control II will be the control axis.

(Example) The reference axis arrange return command (G142) is issued in the sub part system II, when the reference axis arrange is as follows

<Reference axis arrange>

| | X axis | Z axis | Y axis |
|---|---|---|---|
| Sub part system 4 (sub part system) | X4 | Z4 | Y4 |

| Sub part system 4 (sub part system) Machining program | Control axes | | | Uncontrol axes |
|---|---|---|---|---|
| | X | Z | Y | |
| (Activate sub part system II) | - | - | - | X4, Y4, Z4 |
| G140 X=X1 Z=Z1<br>: | X1 | Z1 | - | |
| G142<br>: | X4 | Z4 | Y4 | X1, Z1 |
| M99 (terminate the sub part system II) | - | - | - | X1, Z1, X4, Z4, Y4 |

(3) When returning the axis to the sub part system control II with the arbitrary axis exchange return command (G141), the axis will become an uncontrol axis if the sub part system to which the axis is returned is out of operation.

### Position switch

Position switch is set to the setting value of the reference axis arrange.
The axis for position switch will not change even if the axis arrange within the part system is changed with the arbitrary axis exchange command.

### User macro

The following variables can read and write the date of each axis with the user macro. They are handled in the axis arrange after the axis exchange.

- Mirror image
- Position information
- Workpiece coordinate system offset
- Mirror image by external command
- Mirror image by parameter setting
- Programmable mirror image
- Coordinate rotation by program

### Soft limit

Soft limit is carried out using axis parameter setting value.
Soft limit I and II define the movement range of the axis, and it is valid even during the arbitrary axis exchange control. Soft limit IB, IIB, and IC are the range set with two or more axes' parameters setting values, and the range during axis exchange is set by the parameter of the then axis configuration.
Therefore, in across part systems where the zero points differ, the setting values of Soft limit IB, IIB, and IC need to match so that an area same as that before the axis exchange will be enabled even during the axis exchange.

### Parameter input by program command (G10)

Command the Parameter input by program command (G10) in the reference axis arrange mode.

### Control axis synchronization (G125), Control axis superimposition (G126)

When the axis for axis exchange in the arbitrary axis exchange command is the synchronized axis in control axis synchronization (G125) or the superimposed axis in the control axis superimposition (G126), there is no movement command for the axis for axis exchange. If it is just following the reference axis, it will not be regarded as moving, and the axis exchange will be carried out.

### Setting and display

The method of setting/displaying after the arbitrary axis exchange command (G140) is called "cross setting/display". As opposed to this, the method of setting/displaying as basic definition is called "basic definition setting/display". The method for your machine depends on the MTB specifications (parameter "#1280 ext16/bit2").

(1) 2-digit axis name

For two or more part systems, the same axis name may exist in each part system. To differentiate these axes, an axis name can be displayed in 2 digits (X1, Z2).
The axis name set in the parameter "#1022 axname2" will be displayed.

(2) Displaying the switched coordinate value

Whether or not the axis name or the coordinate value (workpiece coordinate zero points, machine coordinate system) is switched for display during arbitrary axis exchange depends on the MTB specifications.

| Method | Operation |
|---|---|
| Cross setting/display | The axis name and the coordinate value are switched (moved) for display by the arbitrary axis switch control. |
| Basic definition setting/display | The axis name and the coordinate value are displayed in the reference axis arrange, without being switched (moved), by the arbitrary axis switch control. |

The operation screen (except restart search), the setup screen and the graphic trace screen can be switched for display.

When the setup value is "0" in the arbitrary axis exchange control, the coordinate values in the part systems after axis exchange will be display in the order that the parameters were set ("#12071 adr_abs[1])" to "#12078 adr_abs [8]").

Uncontrol axes that were allocated by the arbitrary axis exchange command (G140) from the other part system will be displayed at the end of the part system.

(3) Graphic check screen

When performing a graphic check during the arbitrary axis exchange, the screen shows the paths of the axes, ignoring the commands in the arbitrary axis exchange command blocks.

## Rotation center error compensation

Rotation center error compensation can be performed using the axis switched from another part system with the arbitrary axis exchange control command. The operation when both functions are used together depends on the MTB specifications (parameter "#1450 5axis_Spec/bit5"). Refer to "19.3 Rotation Center Error Compensation (Precautions for Creating a Machining Program)" for details.

## Axis name extension

Because in the environment where the arbitrary axis exchange control is available, only the name of name-unextended axis can be designated to the parameters "#12071 adr_abs[1]" to "#12078 adr_abs[8]", other axes cannot be assigned to the command axis name of name-extended axis. However, regardless of the setting of these parameters, you can designate the axis name of name-extended axis or use the name-extended axis as target axis for axis exchange. The name-extended axis in an unspecified part system cannot be designated for the axis that is targeted for axis exchange.

## Program restart

(1) When the restart search is performed for the blocks after the arbitrary axis exchange command (G140), the arbitrary axis exchange return command (G141) or the reference axis arrange return command (G142) has been issued, the program error (P49) occurs. To restart the program after exchanging the axes, perform the restart search for the blocks before each axis exchange command has been issued.

(2) The restart search is performed only for the part systems in which the search is performed. Therefore, influences of axis exchange commands from other part systems will not to be considered. Perform the restart search in all the part systems.

## Tapping retract

Only when the setting is that the arbitrary axis exchange is not canceled with reset (the parameter "#1280 ext16/bit1" is set to "1"), the tapping retract is possible after the synchronous tapping is interrupted by reset. (This depends on the MTB specifications.)

Do not perform the tapping retract in the following cases. When the axis is rearranged, the axis does not move in the tapping retract; therefore, the tool may be damaged.

- The setting is that the arbitrary axis exchange is canceled with reset (the parameter "#1280 ext16/bit1" is set to "0").
- The synchronous tapping is interrupted by emergency stop or power OFF.

### Synchronous tapping with multiple spindles [C80]

If the synchronous tapping with multiple spindles is performed after an axis has been exchanged with the arbitrary axis exchange control, the synchronous tapping with multiple spindles is performed with the axis configuration after the axis exchange.

### Other functions

The following functions must be executed in reference axis arrange mode.
Do not designate any axis as a target for axis exchange if that axis is included in the part system in which any of following functions is being executed.

- Manual feedrate B surface speed control
- Arbitrary reverse run
- Workpiece position measurement / Rotation measurement
- Mirror image by G code
- Coordinate rotation by parameter

## Precautions and restrictions

### Common precautions/restrictions for G140, G141 and G142

(1) When the arbitrary axis exchange command (G140), the arbitrary axis exchange return command (G141) or the reference axis arrange return command (G142) is issued in a part system in any of the following mode, the program error (P501) will occur.
- In cylindrical interpolation mode
- In polar coordinate interpolation
- In milling interpolation
- In constant surface speed control mode
- In polygon machining mode
- In hobbing mode
- In tool nose radius compensation mode
- In axis name switch
- In fixed cycle for drilling
- In fixed cycle for turning machining
- In compound type fixed cycle
- In special fixed cycle mode (*1)
- In mirror image for facing tool posts
- In balance cut mode
- In chuck barrier/tailstock barrier check
- Stroke check before travel
- In macro modal call (G66.1)
- In hypothetical axis interpolation mode (*1)
- In figure rotation mode (*1)
- In scaling (*1)
- In coordinate rotation by parameter mode (*1)
- In polar coordinate command mode (*1)
- In normal line control mode (*1)
- In circular cutting mode (*1)
- In tool length compensation along the tool axis mode (*1)
- In rotation center error compensation mode

(*1) These are functions of the machining center system.

(2) When the arbitrary axis exchange command (G140), the arbitrary axis exchange return command (G141) or the reference axis arrange return command (G142) is issued to the following axes, the program error (P503) will occur.
- Chopping axis (parameter "#1072 chop_ax" is other than "0")
- Master axis or slave axis of synchronous control
- Master axis or slave axis of multiple-axis synchronization control

(3) If the other G code is commanded in the same block as the arbitrary axis exchange command (G140), the arbitrary axis exchange return command (G141) or the reference axis arrange return command (G142), a program error (P34) will occur.

(4) If a command is issued to an axis that has lost the control right through the arbitrary axis exchange command of the other part system, the program error (P32) will occur.

(5) If an axis was extracted by the arbitrary axis exchange command (G140), the arbitrary axis exchange return command (G141) or the reference axis arrange return command (G142) from the other part system, the axis arrange will change to a state with the extracted axis filled.
The axis arrange also changes when the number of axes increase in the part system through the arbitrary axis exchange command (G140), the arbitrary axis exchange return command (G141) or the reference axis arrange return command (G142).
Therefore, when you use a function to be specified with the axis number in the part system (e.g. position information of user macro: #5001 - #5140+n) after issuing the arbitrary axis exchange command (G140), the arbitrary axis exchange return command (G141) or the reference axis arrange return command (G142), command with the changed axis arrange.

(6) If the arbitrary axis exchange command (G140), the arbitrary axis exchange return command (G141), or the reference axis arrange return command (G142) is issued while the variable-acceleration pre-interpolation acceleration/deceleration is valid, a program error (P126) will occur.

(7) If the arbitrary axis exchange (G140) command is issued during 3-dimensional tool radius compensation (tool's vertical-direction compensation) modal, a program error (P162) will occur. Also, if the reset with the modal retention ("#1151 rstint" is set to "0") is carried out while the cross non-retention ("#1280 ext16/bit1" is set to "0") is set in the axis exchange state, an operation error (M01 0186) will occur in the travel command block after the automatic operation has been performed following NC reset 1. The errors above can be reset using the 3-dimensional tool radius compensation cancel command, NC reset 2, or Reset & rewind.

(8) After arbitrary axis exchange control is carried out, the number of axes that can be controlled with handle feed is limited to one per handle in each part system. If more than one axis are allocated to a handle, an operation error (M01 0106) will occur.

(9) The part system in which simple inclined surface machining or inclined surface machining is being carried out does not cancel mixed control regardless of the setting for the "#1280 ext16/bit1" parameter (cancellation of mixed control by resetting) even if a reset operation that does not reset the modal ("#1151 rstint" is set to "0" and NC reset 1) is carried out. If an axis in a part system in which simple inclined surface machining or inclined surface machining is being carried out is specified as the axis to be exchanged in the part system, axis exchange will not be possible and an operation error (M01 1101) will occur regardless of whether the automatic operation mode has been established.

(10) When exchanging the axis in the following modes, always stop all the axes in the part system before commanding the axis exchange. If any axis is not stopped, an operation error (M01 1101) occurs, causing a failure in the axis exchange. When all the axes in the part system are stopped, the error is reset, and the axis exchange is carried out.
- High-accuracy control
- High-speed high-accuracy control I/II/III
- Spline interpolation
- Tolerance control
- Smooth fairing
- G0 acceleration/deceleration before interpolation

(11) Do not perform the axis exchange in a part system for which the setting of the parameter "#1205 G0bdcc" is different. In some cases, the operation may not be executed as configured in the setting. For example, if the axis in a part system for which the #1205 parameter is set to "0" (G0 acceleration/deceleration after interpolation) or "1" (G0 acceleration/deceleration before interpolation) is moved to a part system for which the #1205 parameter is set to "2" (rapid traverse constant-gradient multi-step acceleration/deceleration), the axis acts in the same way when the parameter is set to "1".

(12) Do not perform a cycle start to a part system from which any axis has been removed by the arbitrary axis exchange command.
If the cycle start is performed when the parameter "#1280 ext16/bit1" is set to "0", the operation starts after the removed axes are returned to basic axis position. The part system in which the arbitrary axis exchange command is being executed continues to operate without removed axes.
If the cycle start is performed when the parameter "#1280 ext16/bit1" is set to "1", the operation starts without removed axes. (The part system in which the arbitrary axis exchange command is being executed continues to operate.)

### Precautions/restrictions specific to the arbitrary axis exchange command (G140)

(1) The command address of the arbitrary axis exchange command (G140) is set for each part system with parameters ("#12071 adr_abs[1]"to "#12078 adr_abs[8]"). When an address not in the parameters is commanded, the program error (P32) will occur.
The number of axes that can be commanded in each part system is the number of axes that can be set for these parameters.
When you use an axis that is not set in these parameters, allocate a command address in the arbitrary axis exchange command (G140) and then issue a command.

(2) If multiple axes are declared with the same command address, or if an axis is declared with multiple command addresses, the program error (P33) will occur.

(3) When the arbitrary axis exchange command (G140) is issued alone in a block (without a command address), all the axes in the part system will become uncontrol axes.

(4) Note that when the arbitrary axis exchange command (G140) is issued from multiple part systems and the axes for axis exchange are overlapping, the operations will be as follows.

| $1 Machining program | $2 Machining program | | Control axes | | | | | |
|---|---|---|---|---|---|---|---|---|
| | | | $1 | | | $2 | | |
| | | | X | Z | Y | X | Z | Y |
| :<br>!2 L1; | :<br>!1 L1; | | X1 | Z1 | Y1 | X2 | Z2 | Y2 |
| G140 X=X1 Z=Z2 Y=Y1;<br>:<br>!2 L2; | G140 X=X1 Z=Z2 Y=Y2;<br>:<br>!1 L2; | --> | - | Z2 (*1) | Y1 | X1 (*1) | - | Y2 |
| ;<br>: | G140 X=X3 Z=Z2 Y=Y2;<br>: | --> | - | Z1 | Y1 | X3 (*2) | Z2 | Y2 |

(*1) When the overlapping axes for axis exchange exist in the arbitrary axis exchange command (G140) part system, they will become control axes in the part system that does not exist in their own part system.

(*2) When the overlapping axes for axis exchange do not exist in the arbitrary axis exchange command (G140) part system, they will become control axes in the part system with the larger part system number.

(5) If the arbitrary axis exchange command (G140) is issued in the method for exchanging command axes ("#1434 G140Type2" is set to "1") when an axis, which lost the control right of axis in the arbitrary axis exchange command (G140) from other part systems, exists, the operations will be as follows.

| $1 Machining program | $2 Machining program | Control axes | | | | | | | Uncontrol axes |
|---|---|---|---|---|---|---|---|---|---|
| | | $1 | | | | $2 | | | |
| | | X | Z | Y | H | X | Z | H | |
| : | : | X1 | Z1 | Y1 | H1 | X2 | Z2 | H2 | - |
| :<br>:<br>:<br>!2 L1; | G140 H=H1;<br>:<br>!1 L1; | X1 | Z1 | Y1 | - | X2 | Z2 | H1 | H2 |
| G140 Z=Z2;<br>G00 H100.; (*1)<br>: | :<br>:<br>: | X1 | Z2 | Y1 | - | X2 | - | H1 | Z1, H2 |

(*1) The program error (P32) occurs in $1 (1st part system) as the control right of H1 axis was lost in the arbitrary axis exchange command (G140) in $2 (2nd part system).

### Precautions/restrictions specific to the arbitrary axis exchange return command (G141)

(1) If an address other than N (sequence number) is commanded in the same block as for the arbitrary axis exchange return command (G141), a program error (P32) will occur.

(2) In a part system where the arbitrary axis exchange return command (G141) was executed, execute the arbitrary axis exchange command (G140) before executing the same command again. A program error (P33) will occur if G141 is commanded without having commanded G140.

(3) After turning the power ON, and after resetting the reference axis arrange, if the arbitrary axis exchange return command (G141) is commanded in a part system where the arbitrary axis exchange command (G140) has never been executed, the command will be ignored.

(4) When the arbitrary axis exchange return command (G141) is executed after the reference axis arrange return command (G142), the axis arrange will be that before the reference axis arrange return command (G142) was executed.

### Precautions/restrictions specific to the reference axis arrange return command (G142)

(1) If an address other than N (sequence number) is commanded in the same block as for the reference axis arrange return command (G142), a program error (P32) will occur.

# 16.4 Control Axis Superimposition

## 16.4.1 Control Axis Superimposition ; G126

### Function and purpose

This function enables superimposition on and control of an axis in a selected part system with an axis in another part system.
This is effective when machining by the 1st part system (X1, Z1) and the 2nd part system (X2, Z2) are executed simultaneously for the machine configuration where a workpiece moves by a movement command to the Z axis direction. This function eliminate the need of fixing the workpiece position for machining in the superimposed part system (the 2nd part system) and allows the simultaneous machining of the reference axis part system (the 1st part system) and the superimposed axis part system (the 2nd part system).
This function can control superimposition of up to 3 axes.
As long as the reference axis and the superimposed axis do not overlap, there is no restrictions on the number of sets.
There are two methods: commanding with PLC signal and commanding with G command. MTB specifications determine which is valid (parameter "#1280 ext16/bit7").
This section describes the methods of executing with G commands .
Terms in the explanation are defined as follows.

| | |
|---|---|
| Reference axis | The basic in the control axis superimposition function (moves only by its own axis command) |
| Superimposed axis | The axis which moves including the reference axis movement in the control axis superimposition function (moves by reference axis or/and own axis command). |
| Superimposition of 2 axes | 1 superimposed axis for a reference axis |
| 3 axes tandem superimposition | The condition that an axis is the superimposed axis and becomes the reference axis for another superimposed axis at the same time.<br>The first superimposed axis is referred to as the "1st superimposed axis" and the other axis as the "2nd superimposed axis". |

While using the control axis superimposition function, the workpiece zero point of the superimposed axis moves according to the movement amount of the reference axis. Because the superimposed axis tries to maintain the position in the workpiece coordinate system, it moves as much as the movement amount of the reference axis.
As long as the reference axis and the superimposed axis do not overlap, the number of control axis superimposition set has no limitation.

(Example) Reference axis: Z1, superimposed axis: Z2.

The zero point in the figure indicates the 2nd part system workpiece coordinate zero point.

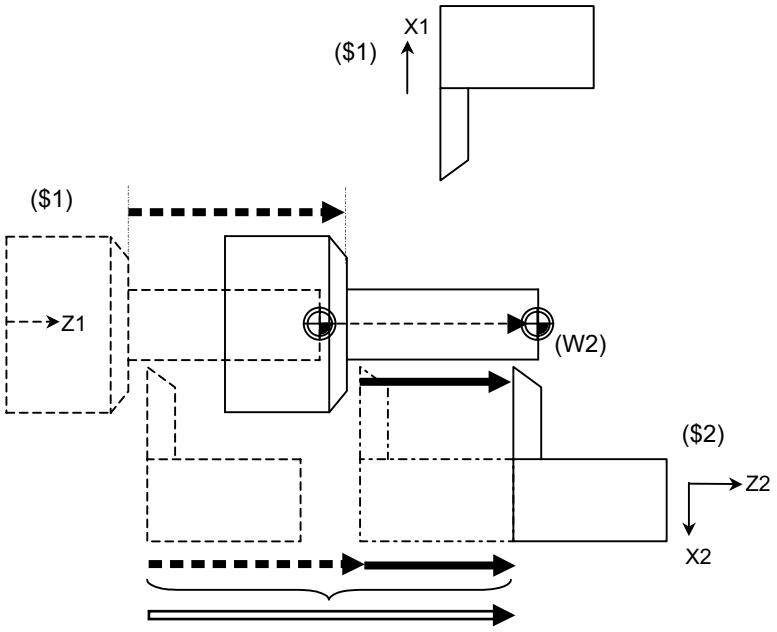


Z1 actual movement amount = Z1 commanded movement amount

Z2 commanded movement amount

Z2 actual movement amount = Z1 actual movement amount + Z2 commanded movement amount

## Command format

### Superimposition start

**G126 Superimposed axis name = Reference axis name (,P__) ;**

| | |
|---|---|
| Superimposed axis name | The axis to be operated as superimposed axis (The axis name set in the parameter (#1022 axname2) (two characters)) |
| Reference axis name | The axis to be operated as referenced axis (The axis name set in the parameter (#1022 axname2) (two characters))<br>If the symbol "-" is added in front of the reference axis name, the superimposed axis can be synchronized in the opposite direction of the reference axis. |
| P | Designation of the superimposed axis workpiece coordinate system (Set the workpiece coordinate zero point of the superimposed axis in the workpiece coordinate system of the reference axis) (Radius value)<br>(mm/inch)(Decimal point command is possible.) |
| , (comma) | Used as delimiter when specifying the address after "superimposed axis name = reference name". |

### Superimposition end

**G126 Superimposed axis name;**

| | |
|---|---|
| Superimposed axis name | The axis operating as superimposed axis (The axis name set in the parameter "#1022 axname2" (2 characters)) |

## Detailed description

The machine configuration in the figure below describes each operation.
In the 1st part system (X1,Z1), the X axis command moves the tool and the Z axis command moves the workpiece.
In the 2nd part system (X2,Z2), the X and Z axes command moves the tool.
The workpiece coordinate zero point (W1, W2) in the figure indicates the Z axis workpiece coordinate zero point.
Reference axis: Z1, superimposed axis: Z2.

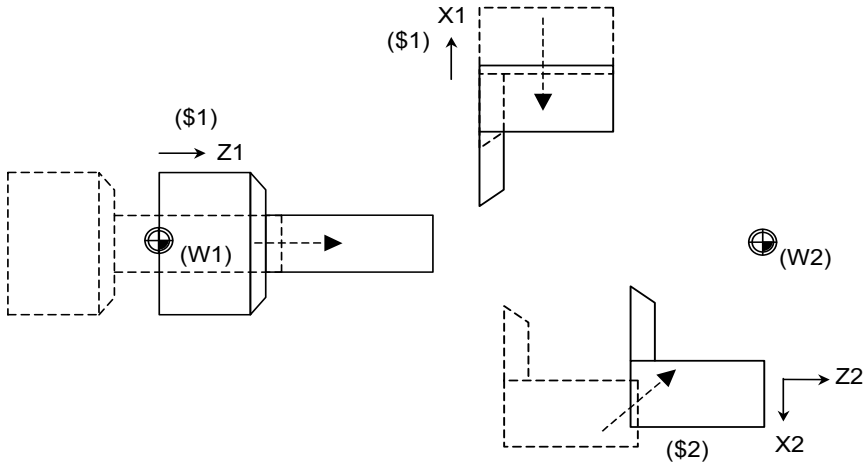

### 2-axis superimposition start operation

The following operation example explains the start command to superimpose Z2 axis onto Z1 axis.

**Command : G126 Z2 = Z1 ,Pp ;**

The superimposition start command automatically executes the following operation.

(1) Wait for the acceleration/deceleration time constant of all axes including the reference axis/the superimposed axis.

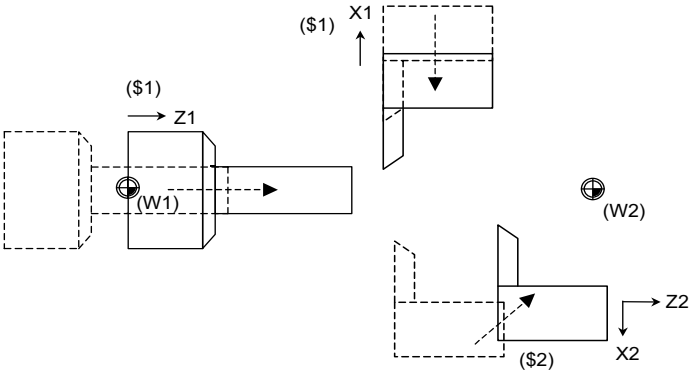


(2) Set the superimposed axis workpiece zero point by a P command, and the relative distance of Z1 axis (reference axis) and Z2 axis (superimposed axis). The relative distance and the setting depend on the MTB specifications (related parameters "#2144 baseps", "#2143 polar"). The superimposed axis will not move.

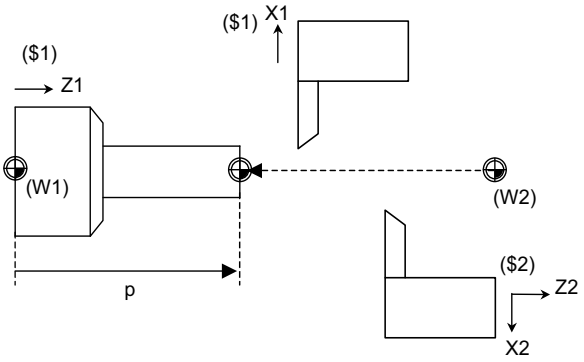


The following figure shows the relationship between the workpiece zero point of Z2 axis superimposition and the address P when the axis superimposition start is commanded in a case where (a) relative polarity is present and a case where (b) relative polarity is absent.

(a) Relative polarity (positive) (the value of "#2143 polar" is "0" for both the reference axis and the superimposed axis)

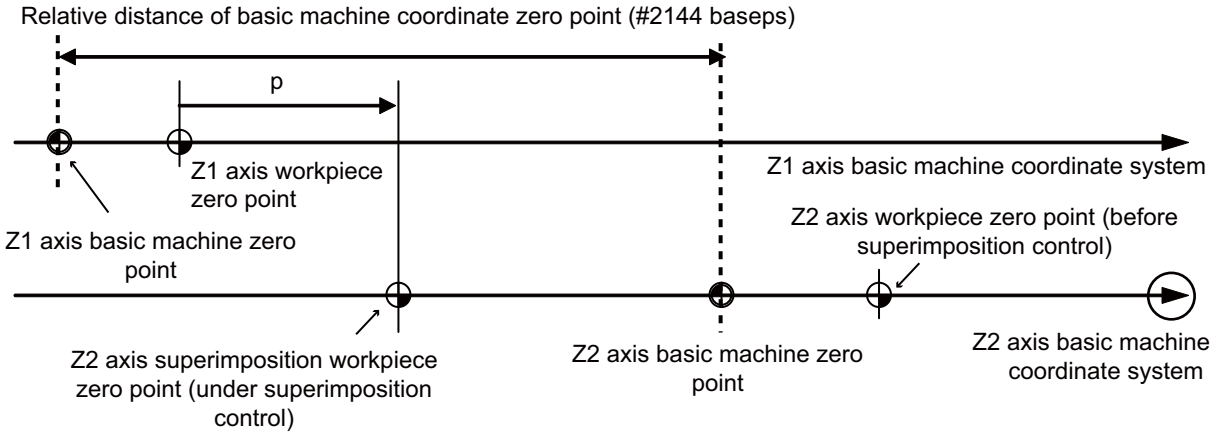

(b) Relative polarity (negative) (the value of "#2143 polar" is "0" for the reference axis and "1" for the superimposed axis)

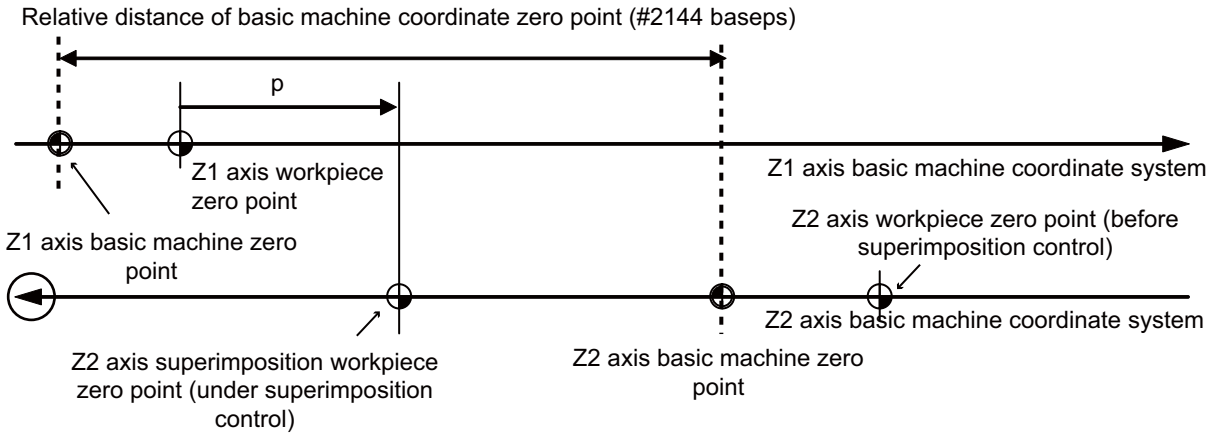


(3) Switch the time constant of all axes of the part system containing the reference axis and superimposed axis, to the time constant for the superimposition set in the MTB specifications (parameter #2092 - #2095).

(4) Start the superposition control of Z1 axis (reference axis) and Z2 axis (superimposed axis).
Parameters of the rapid traverse rate and the clamp rate vary depending on the MTB specifications (parameter #2090, #2091).

## Start operation for superimposition of 3 axes

The following operation example explains the start command for superimposing Z3 axis onto Z2 axis from the superimposition of 2 axes consisting of Z1 axis (reference axis) and Z2 axis (superimposed axis).

**Command : G126 Z3=Z2 ,P_ ;**

The superimposition start command automatically executes the following operation.

(1) Wait for the acceleration/deceleration time constant of all axes including Z3 axis (2nd superimposed axis), Z2 axis (1st superimposed axis) and Z1 axis (reference axis).

(2) Set the superimposed axis workpiece zero point by a P command.
The setting of the workpiece zero point can be carried out by shifting the G92 coordinate system. (Z2 axis (superimposed axis) will not move.)

(3) Switch the time constant of all axes of the part system containing Z3 axis (2nd superimposed axis), Z2 axis (1st imposed axis) and Z1 (reference axis) , to the time constant for the superimposition set in the MTB specifications (parameter #2622 - #2625).

(4) Start the superposition control of Z3 axis (2nd superimposed axis)/Z2 axis (1st superimposed axis)/Z1 axis (reference axis).
Refer to the section of "Operation during superimposition" for details.
Parameters of the rapid traverse rate and the clamp rate vary depending on the MTB specifications (parameter #2626 - #2630).

## Operation during superimposition

**[Workpiece coordinate system of the superimposed axis]**

When the movement of reference axis is executed, the superimposed axis workpiece coordinate zero point moves according to the movement of the superimposed axis. The superimposed axis moves as much as the reference axis to maintain the workpiece position.
For the rapid traverse rate and the clamp rate, refer to the section of "Traverse rate of reference axis/superimposed axis (superimposition of 2 axes and 3 axes tandem superimposition)".

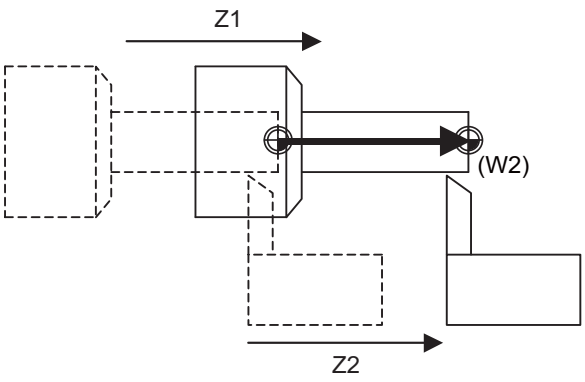


**[Axis movement during the superimposition control]**

(1) When commanding movement only to the reference axis

If a movement command is issued only to the reference axis and not to the superimposed axis when the control axis is superimposed, the superimposed axis moves as same as the reference axis. And the workpiece zero point of the superimposed axis moves as much as the movement amount of the reference axis.

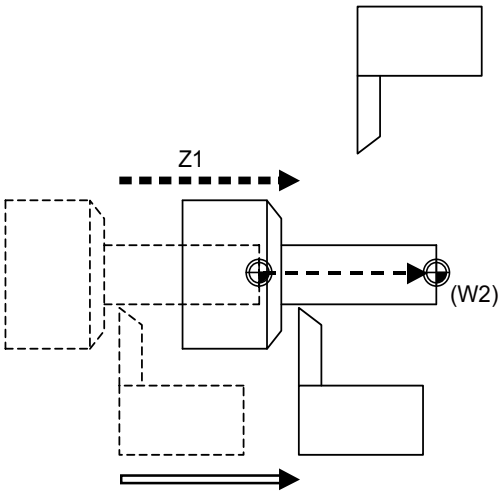


Z1 actual movement amount = Z1 commanded movement amount

Z2 actual movement amount = Z1 actual movement amount

(2) When commanding movement only to the superimposed axis

If a movement command is issued only to the superimposed axis and not to the reference axis when the control axis is superimposed, the superimposed axis actual movement amount equals to that of the reference axis. And the workpiece zero point of the superimposed axis will not move because the reference axis will not move.

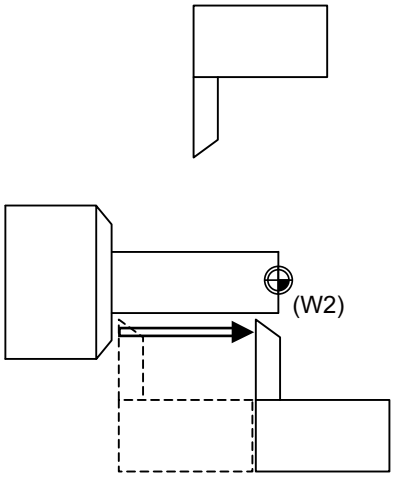


Z2 actual movement amount = Z2 commanded movement amount

(3) When commanding movement to both the reference axis and superimposed axis

If a movement command is issued to both the reference axis and superimposed axis at the same time when the control axis is superimposed, the superimposed axis actual movement amount equals to "reference axis movement amount + superimposed axis commanded movement amount. And the relative movement amount of the superimposed axis to the workpiece equals the commanded movement amount of the superimposed axis. And the workpiece zero point of the superimposed axis moves as much as the movement amount of the reference axis.

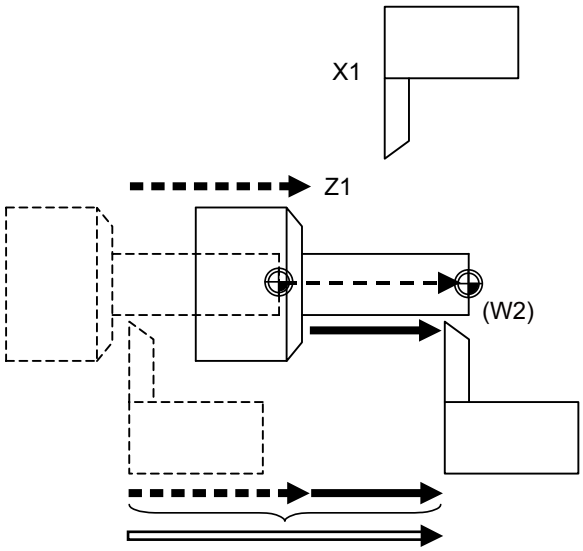


Z1 actual movement amount = Z1 commanded movement amount

Z2 commanded movement amount

Z2 actual movement amount = Z1 actual movement amount + Z2 commanded movement amount

### The feedrate of the reference axis and superimposed axis (superimposition of 2 axes and 3 axes tandem superimposition)

(1) Operation in the superimposition of 2 axes

If the movement command is issued to both the reference axis and the superimposed axis, the movement rate of the superimposed axis will be faster than when the movement is commanded only by the superimposed axis as long as the moving direction of the superimposed axis synchronized with the reference axis movement is the same as that commanded only by the superimposed axis.
In this case, in the normal clamp speed process, as the speed may become faster than that of the motor capacity, the rapid traverse rate and clamp rate of the reference axis and superimposed axis are calculated according to the following table.

| Superimposed axis | | Reference axis | | | |
|---|---|---|---|---|---|
| | | Stop | Rapid traverse | Cutting feed | Thread cutting |
| Stop | | Reference axis: Stop<br>Superimposed axis: Stop | Reference axis: [#2001 rapid]<br>Superimposed axis: Stop | Reference axis: [#2002 clamp]<br>Superimposed axis: Stop | Reference axis: (*1)<br>Superimposed axis: Stop |
| Rapid traverse | Move in the same direction as the reference axis | Reference axis: Stop<br>Superimposed axis: [#2001 rapid] | Reference axis: [#2090 plrapid]<br>Superimposed axis: [#2090 plrapid] | Reference axis: [#2002 clamp]<br>Superimposed axis: [#2621 plrapid2] | Reference axis: (*1)<br>Superimposed axis: [#2621 plrapid2] |
| | Move to the opposite direction of the reference axis | | Reference axis: [#2001 rapid]<br>Superimposed axis: [#2001 rapid] | Reference axis: [#2002 clamp]<br>Superimposed axis: [#2001 rapid] | Reference axis: (*1)<br>Superimposed axis: [#2001 rapid] |
| Cutting feed | Move in the same direction as the reference axis | Reference axis: Stop<br>Superimposed axis: [#2002 clamp] | Reference axis: [#2621 plrapid2]<br>Superimposed axis: [#2002 clamp] | Reference axis: [#2091 plclamp]<br>Superimposed axis: [#2091 plclamp] | Reference axis: (*1)<br>Superimposed axis: [#2091 plclamp] |
| | Move to the opposite direction of the reference axis | | Reference axis: [#2001 rapid]<br>Superimposed axis: [#2002 clamp] | Reference axis: [#2002 clamp]<br>Superimposed axis: [#2002 clamp] | Reference axis: (*1)<br>Superimposed axis: [#2002 clamp] |
| Thread cutting | Move in the same direction as the reference axis | Reference axis: Stop<br>Superimposed axis: (*1) | Reference axis: [#2621 plrapid2]<br>Superimposed axis: (*1) | Reference axis: [#2091 plclamp]<br>Superimposed axis: (*1) | Reference axis: (*1)<br>Superimposed axis: (*1) |
| | Move to the opposite direction of the reference axis | | Reference axis: [#2001 rapid]<br>Superimposed axis: (*1) | Reference axis: [#2002 clamp]<br>Superimposed axis: (*1) | Reference axis: (*1)<br>Superimposed axis: (*1) |

(*1) If the spindle rotation speed is faster than [#2091 plclamp] when thread cutting is started, cutting will not start.
(The operation error (M01 0107) will occur.)

(2) Operation in the 3 axes tandem superimposition

As with the case of superimposition of 2 axes, depending on the movement direction of the reference axis, the 1st imposed axis and the 2nd imposed axis, the feed rate may be faster than the rate of movement by the command of the 1st imposed axis or the 2nd imposed axis. Therefore, calculate the rapid traverse rate and the clamp rate of the reference axis, the 1st superimposed axis or the 2nd superimposed axis, following the table below.

(a) Rapid traverse rate and clamp rate of the reference axis

| 1st superimposed axis | | 2nd superimposed axis | | Reference axis | | | | |
|---|---|---|---|---|---|---|---|---|
| | | | | Stop | Rapid traverse | | Cutting feed | |
| | | | | | + | - | + | - |
| Stop | | Stop | | Stop | #2001 rapid | #2001 rapid | #2002 clamp | #2002 clamp |
| | | Rapid traverse | + | Stop | #2090 plrapid | #2001 rapid | #2002 clamp | #2002 clamp |
| | | | - | Stop | #2001 rapid | #2090 plrapid | #2002 clamp | #2002 clamp |
| | | Cutting feed (Thread cutting) | + | Stop | #2621 plrapid2 | #2001 rapid | #2091 plclamp | #2002 clamp |
| | | | - | Stop | #2001 rapid | #2621 plrapid2 | #2002 clamp | #2091 plclamp |
| Rapid traverse | + | Stop | | Stop | #2090 plrapid | #2001 rapid | #2002 clamp | #2002 clamp |
| | | Rapid traverse | + | Stop | #2626 pl3rapid | #2001 rapid | #2002 clamp | #2002 clamp |
| | | | - | Stop | #2090 plrapid | #2001 rapid | #2002 clamp | #2002 clamp |
| | | Cutting feed (Thread cutting) | + | Stop | #2627 pl3rapid2 | #2001 rapid | #2630 pl3clamp2 | #2002 clamp |
| | | | - | Stop | #2090 plrapid | #2001 rapid | #2002 clamp | #2002 clamp |
| | - | Stop | | Stop | #2001 rapid | #2090 plrapid | #2002 clamp | #2002 clamp |
| | | Rapid traverse | + | Stop | #2001 rapid | #2090 plrapid | #2002 clamp | #2002 clamp |
| | | | - | Stop | #2001 rapid | #2626 pl3rapid | #2002 clamp | #2002 clamp |
| | | Cutting feed (Thread cutting) | + | Stop | #2001 rapid | #2090 plrapid | #2002 clamp | #2002 clamp |
| | | | - | Stop | #2001 rapid | #2627 pl3rapid2 | #2002 clamp | #2630 pl3clamp2 |
| Cutting feed (Thread cutting) | + | Stop | | Stop | #2621 plrapid2 | #2001 rapid | #2091 plclamp | #2002 clamp |
| | | Rapid traverse | + | Stop | #2627 pl3rapid2 | #2001 rapid | #2630 pl3clamp2 | #2002 clamp |
| | | | - | Stop | #2621 plrapid2 | #2090 plrapid | #2091 plclamp | #2002 clamp |
| | | Cutting feed (Thread cutting) | + | Stop | #2628 pl3rapid3 | #2001 rapid | #2629 pl3clamp | #2002 clamp |
| | | | - | Stop | #2621 plrapid2 | #2621 plrapid2 | #2091 plclamp | #2091 plclamp |
| | - | Stop | | Stop | #2001 rapid | #2621 plrapid2 | #2002 clamp | #2091 plclamp |
| | | Rapid traverse | + | Stop | #2090 plrapid | #2621 plrapid2 | #2002 clamp | #2091 plclamp |
| | | | - | Stop | #2001 rapid | #2627 pl3rapid2 | #2002 clamp | #2630 pl3clamp2 |
| | | Cutting feed (Thread cutting) | + | Stop | #2621 plrapid2 | #2621 plrapid2 | #2091 plclamp | #2091 plclamp |
| | | | - | Stop | #2001 rapid | #2628 pl3rapid3 | #2002 clamp | #2629 pl3clamp |

If the spindle rotation speed at thread cutting is faster than the clamp rate given in the MTB specifications, cutting will not start. (The operation error (M01 0107) will occur.)

(b) Rapid traverse rate and clamp rate of the 1st superimposed axis

| Reference axis | | 2nd superimposed axis | | 1st superimposed axis | | | | |
|---|---|---|---|---|---|---|---|---|
| | | | | Stop | Rapid traverse | | Cutting feed | |
| | | | | | + | - | + | - |
| Stop | | Stop | | Stop | #2001 rapid | #2001 rapid | #2002 clamp | #2002 clamp |
| | | Rapid traverse | + | Stop | #2090 plrapid | #2001 rapid | #2002 clamp | #2002 clamp |
| | | | - | Stop | #2001 rapid | #2090 plrapid | #2002 clamp | #2002 clamp |
| | | Cutting feed (Thread cutting) | + | Stop | #2621 plrapid2 | #2001 rapid | #2091 plclamp | #2002 clamp |
| | | | - | Stop | #2001 rapid | #2621 plrapid2 | #2002 clamp | #2091 plclamp |
| Rapid traverse | + | Stop | | Stop | #2090 plrapid | #2001 rapid | #2002 clamp | #2002 clamp |
| | | Rapid traverse | + | Stop | #2626 pl3rapid | #2001 rapid | #2002 clamp | #2002 clamp |
| | | | - | Stop | #2090 plrapid | #2001 rapid | #2002 clamp | #2002 clamp |
| | | Cutting feed (Thread cutting) | + | Stop | #2627 pl3rapid2 | #2001 rapid | #2630 pl3clamp2 | #2002 clamp |
| | | | - | Stop | #2090 plrapid | #2001 rapid | #2002 clamp | #2002 clamp |
| | - | Stop | | Stop | #2001 rapid | #2090 plrapid | #2002 clamp | #2002 clamp |
| | | Rapid traverse | + | Stop | #2001 rapid | #2090 plrapid | #2002 clamp | #2002 clamp |
| | | | - | Stop | #2001 rapid | #2626 pl3rapid | #2002 clamp | #2002 clamp |
| | | Cutting feed (Thread cutting) | + | Stop | #2001 rapid | #2090 plrapid | #2002 clamp | #2002 clamp |
| | | | - | Stop | #2001 rapid | #2627 pl3rapid2 | #2002 clamp | #2630 pl3clamp2 |
| Cutting feed (Thread cutting) | + | Stop | | Stop | #2621 plrapid2 | #2001 rapid | #2091 plclamp | #2002 clamp |
| | | Rapid traverse | + | Stop | #2627 pl3rapid2 | #2001 rapid | #2630 pl3clamp2 | #2002 clamp |
| | | | - | Stop | #2621 plrapid2 | #2090 plrapid | #2091 plclamp | #2002 clamp |
| | | Cutting feed (Thread cutting) | + | Stop | #2628 pl3rapid3 | #2001 rapid | #2629 pl3clamp | #2002 clamp |
| | | | - | Stop | #2621 plrapid2 | #2621 plrapid2 | #2091 plclamp | #2091 plclamp |
| | - | Stop | | Stop | #2001 rapid | #2621 plrapid2 | #2002 clamp | #2091 plclamp |
| | | Rapid traverse | + | Stop | #2090 plrapid | #2621 plrapid2 | #2002 clamp | #2091 plclamp |
| | | | - | Stop | #2001 rapid | #2627 pl3rapid2 | #2002 clamp | #2630 pl3clamp2 |
| | | Cutting feed (Thread cutting) | + | Stop | #2621 plrapid2 | #2621 plrapid2 | #2091 plclamp | #2091 plclamp |
| | | | - | Stop | #2001 rapid | #2628 pl3rapid3 | #2002 clamp | #2629 pl3clamp |

If the spindle rotation speed at thread cutting is faster than the clamp rate given in the MTB specifications, cutting will not start. (The operation error (M01 0107) will occur.)

(c) Rapid traverse rate and clamp rate of the 2nd superimposed axis

| Reference axis | | 1st superimposed axis | | 2nd superimposed axis | | | | |
|---|---|---|---|---|---|---|---|---|
| | | | | Stop | Rapid traverse | | Cutting feed | |
| | | | | | + | - | + | - |
| Stop | | Stop | | Stop | #2001 rapid | #2001 rapid | #2002 clamp | #2002 clamp |
| | | Rapid traverse | + | Stop | #2090 plrapid | #2001 rapid | #2002 clamp | #2002 clamp |
| | | | - | Stop | #2001 rapid | #2090 plrapid | #2002 clamp | #2002 clamp |
| | | Cutting feed (Thread cutting) | + | Stop | #2621 plrapid2 | #2001 rapid | #2091 plclamp | #2002 clamp |
| | | | - | Stop | #2001 rapid | #2621 plrapid2 | #2002 clamp | #2091 plclamp |
| Rapid traverse | + | Stop | | Stop | #2090 plrapid | #2001 rapid | #2002 clamp | #2002 clamp |
| | | Rapid traverse | + | Stop | #2626 pl3rapid | #2001 rapid | #2002 clamp | #2002 clamp |
| | | | - | Stop | #2001 rapid | #2001 rapid | #2002 clamp | #2002 clamp |
| | | Cutting feed (Thread cutting) | + | Stop | #2627 pl3rapid2 | #2001 rapid | #2630 pl3clamp2 | #2002 clamp |
| | | | - | Stop | #2090 plrapid | #2001 rapid | #2002 clamp | #2002 clamp |
| | - | Stop | | Stop | #2001 rapid | #2090 plrapid | #2002 clamp | #2002 clamp |
| | | Rapid traverse | + | Stop | #2001 rapid | #2001 rapid | #2002 clamp | #2002 clamp |
| | | | - | Stop | #2001 rapid | #2626 pl3rapid | #2002 clamp | #2002 clamp |
| | | Cutting feed (Thread cutting) | + | Stop | #2001 rapid | #2090 plrapid | #2002 clamp | #2002 clamp |
| | | | - | Stop | #2001 rapid | #2627 pl3rapid2 | #2002 clamp | #2630 pl3clamp2 |
| Cutting feed (Thread cutting) | + | Stop | | Stop | #2621 plrapid2 | #2001 rapid | #2091 plclamp | #2002 clamp |
| | | Rapid traverse | + | Stop | #2627 pl3rapid2 | #2001 rapid | #2630 pl3clamp2 | #2002 clamp |
| | | | - | Stop | #2001 rapid | #2090 plrapid | #2002 clamp | #2002 clamp |
| | | Cutting feed (Thread cutting) | + | Stop | #2628 pl3rapid3 | #2001 rapid | #2629 pl3clamp | #2002 clamp |
| | | | - | Stop | #2621 plrapid2 | #2621 plrapid2 | #2091 plclamp | #2091 plclamp |
| | - | Stop | | Stop | #2001 rapid | #2621 plrapid2 | #2002 clamp | #2091 plclamp |
| | | Rapid traverse | + | Stop | #2090 plrapid | #2001 rapid | #2002 clamp | #2002 clamp |
| | | | - | Stop | #2001 rapid | #2627 pl3rapid2 | #2002 clamp | #2630 pl3clamp2 |
| | | Cutting feed (Thread cutting) | + | Stop | #2621 plrapid2 | #2621 plrapid2 | #2091 plclamp | #2091 plclamp |
| | | | - | Stop | #2001 rapid | #2628 pl3rapid3 | #2002 clamp | #2629 pl3clamp |

If the spindle rotation speed at thread cutting is faster than the clamp rate given in the MTB specifications, cutting will not start. (The operation error (M01 0107) will occur.)

### Composition of axis movement for superimposed axis

For details on "rapid" and "clamp" in the figure, refer to the section "The feedrate of the reference axis and superimposed axis".

(1) Superimposition of 2 axes (example of reference axis Z1 and superimposed axis Z2)
In the figure, Z1 shows the operation of the reference axis only, Z2 shows the operation of superimposed axis only, Z2' shows the operation example of ((reference axis) + (superimposed axis)).

(a) Z1 Stop, Z2 Rapid traverse

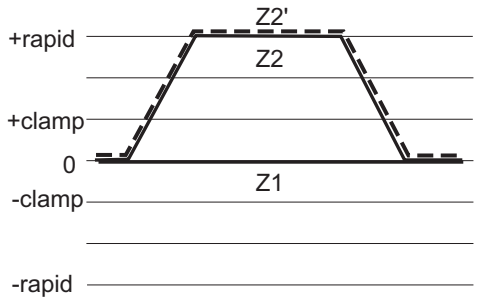


(b) Z1 Stop, Z2 Cutting feed

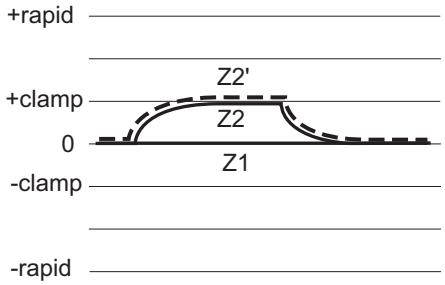


(c) Z1 Rapid traverse, Z2 (same direction)

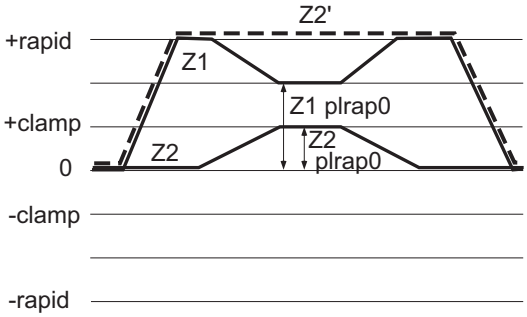


(d) Z1 Rapid traverse, Z2 (different direction)

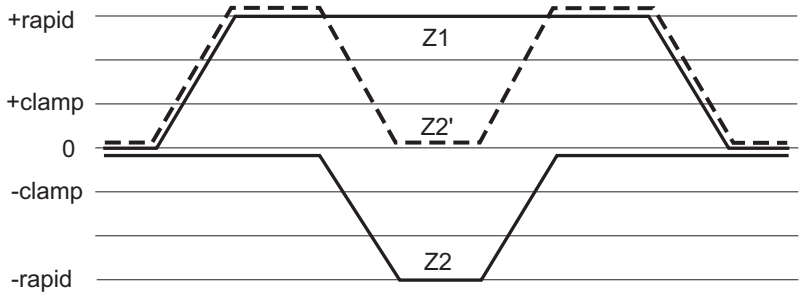

(2) 3 axes tandem superimposition (example of reference axis Z1 1st superimposed axis Z2, and 2nd superimposed axis Z3)
In the figure, Z1 shows the operation of the reference axis only, Z2 shows the operation of superimposed axis only, Z2' shows the operation example of ((reference axis) + (1st superimposed axis), Z3' shows the operation example of ((reference axis) + (1st superimposed axis) + (2nd superimposed axis)).

(a) Z1 Rapid traverse, Z2 Rapid traverse, Z3 Rapid Traverse (all axes in the same direction)

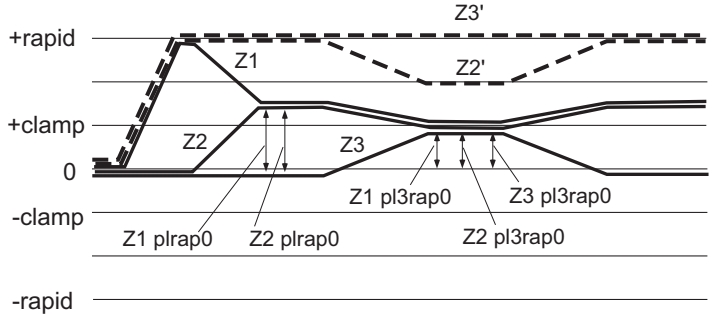


(b) Z1 Rapid traverse, Z2 Rapid traverse , Z3 Rapid traverse (only Z3 in the opposite direction)

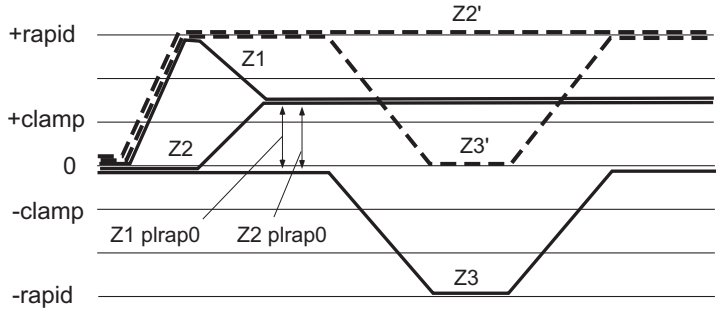


(c) Z1 Rapid traverse, Z2 Rapid traverse, Z3 Rapid traverse (all axes in the same direction)

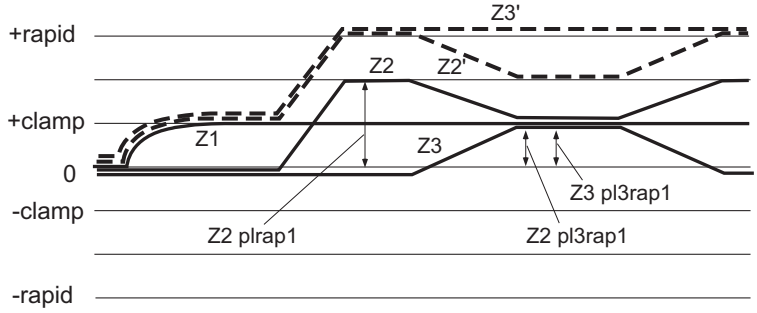

### End of superimposition of 2 axes

This section shows the examples of executing an ending operation when the Z2 axis is superimposed onto Z1 axis.

**Command: G126 Z2 ;**

The superimposition end command automatically executes the following operation.

(1) After completing the currently processing block, the part system containing the reference axis and superimposed axis decelerates and stops.

(2) Switch the time constant of all axes of the part system containing the reference axis and superimposed axis, to the normal value (set in the MTB specifications).

(3) Return the superimposed axis workpiece coordinate zero point to where it was before the superimposition start command was issued. (The superimposed axis will not move.)

(4) The superposition control of 2 axes, Z1 axis (reference axis) and Z2 axis (superimposed axis), ends.

### 3 axes tandem superimposition ends

This section shows the example of executing an ending operation from the 3 axes tandem superimposition of Z1 axis (reference axis)/Z2 axis (1st superimposed axis)/Z3 axis (2nd superimposed axis).

**Command: G126 Z2 ;**

The superimposition end command automatically executes the following operation.

(1) Decelerates to a stop after executing a block processing the part system containing Z1 axis (reference axis)/Z2 axis (1st superimposed axis)/Z3 axis (2nd superimposed axis).

(2) Switch the time constant of all axes of the part system containing Z2 axis and Z3 axis into the time constant for the superimposition of 2 axes set in the parameter.
Switch the time constant of all axes of the part system containing Z1 axis into the normal time constant set in the parameter.

(3) Return Z2 axis workpiece coordinate zero point to where it was before the superimposition start command was issued. (The superimposed axis will not move.)

(4) First, superposition control of Z1/Z2 ends and tandem superimposition on Z1 axis/Z2 axis/Z3 axis will be eliminated.
(Superimposition of 2 axes is created with Z2 axis/Z3 axes.) For ending the superimposition of 2 axes, refer to the explanation of the superimposition of 2 axes.

## Program example

### Example of superimposition of 2 axis

(1) When commanding from the part system containing the reference axis

| [1st part system] | [2nd part system] | Operation |
|---|---|---|
| : | : | |
| N10 !L1; | N20 !L1; | |
| N11 G126 Z2=Z1; | : | Start superimposing Z2 axis on Z1 axis |
| N12 !L2; | N21 !L2; | Superimposition of 2 axis with Z1 axis (reference axis)/Z2 axis (superimposed axis) |
| N13 G01 Z50.F100; | N22 G01 X-10. F100; | |
| N14 X4. Z4.; | N23 Z60.; | |
| : | : | |
| N15 !L3; | N24 !L3; | |
| N16 G126 Z2; | : | End of superimposition of Z2 axis |
| : | : | |

(2) When commanding from a part system containing neither the superimposed axis nor reference axis

| [1st part system] | [2nd part system] | Operation |
|---|---|---|
| : | : | |
| N10 !L1; | N20 !L1; | |
| : | N21 G126 Z2=Z1; | Start superimposing Z2 axis on Z1 axis |
| N12 !L2; | N22 !L2; | Superimposition of 2 axis with Z1 axis (reference axis)/Z2 axis (superimposed axis) |
| N13 G01 Z50.F100; | N22 G01 X-10. F100; | |
| N14 X4. Z4.; | N23 Z60.; | |
| : | : | |
| N15 !L3; | N24 !L3; | |
| : | N16 G126 Z2; | End of superimposition of Z2 axis |
| : | : | |

(3) When commanding from a part system containing neither the superimposed axis nor reference axis

| [1st part system] | [2nd part system] | [3rd part system] | Operation |
|---|---|---|---|
| : | : | : | |
| N10 !2!3L1; | N20 !1!3L1; | N30 !1!2L1; | |
| : | : | N31 G126 Z2=Z1; | Start superimposing Z2 axis on Z1 axis |
| N11 !2!3L2; | N21 !1!3L2; | N32 !1!2L2; | Superimposition of 2 axis with Z1 axis (reference axis)/Z2 axis (superimposed axis) |
| N12 G01 Z50. F100; | N22 G01 X-10. F100; | N33 G01 X10.Z50. F100; | |
| N13 X4.Z4.; | N23 Z60.; | N34 G00 X10.; | |
| : | : | : | |
| N14 !2!3L3; | N24 !1!3L3; | N35 !1!2L3; | |
| : | : | N36 G126 Z2; | End of superimposition of Z2 axis |
| : | : | : | |

**Example of superimposition of 3 axis**

| [1st part system] | [2nd part system] | [3rd part system] | Operation |
|---|---|---|---|
| : | : | : | |
| N10 !2L1; | N20 !1L1; | : | |
| : | N21 G126 Z2=Z1; | : | Z2 axis starts superimposing on Z1 axis |
| N11 !2L2; | N21 !1L2; | : | Superimposition of 2 axis with Z1 axis (reference axis)/Z2 axis (superimposed axis) |
| N12 G01 Z50. F100; | N22 G01 X-10. F100; | : | |
| N13 X4.Z4.; | N23 Z60.; | : | |
| : | : | : | |
| N14 !2!3L3; | N24 !1!3L3; | N31 !1!2L3; | |
| : | : | N32 G126 Z3=Z2; | Z3 axis starts superimposing on Z2 axis |
| : | : | N33 G01 X10.Z50. F100; | 3 axes tandem superimposition of Z1 axis (reference axis)/Z2 axis (1st superimposed axis)/Z3 axis (2nd superimposed axis). |
| : | : | N34 G00 X10.; | |
| : | : | : | |
| N15 !2!3L4; | N25 !1!3L4; | N35 !1!2L4; | |
| : | : | N36 G126 Z3; | End of superimposition of Z3 axis |
| N16 !2!3L5; | N26 !1!3L5; | N37 !1!2L5; | Superimposition of 2 axis with Z1 axis (reference axis)/Z2 axis (superimposed axis) |
| : | : | : | |
| N17 !2!3L6; | N27 !1!3L6; | N38 !1!2L6; | |
| : | N28 G126 Z2; | : | End of superimposition of Z2 axis |
| : | : | : | |

## Relationship with other functions

### Functions which cannot be used during control axis superimposition

(1) The operation error (M01 1003) will occur if the following commands are issued to the superimposed axis and reference axis during the control axis superimposition.

**<Reference axis>**

| Function | G code |
|---|---|
| ♦Zero point restoration command (The axis will move up to the intermediate point.)<br>♦Skip command<br>♦Tool exchange position return | G28<br>G31 |

**<Superimposed axis>**

| Function | G code |
|---|---|
| ♦Zero point restoration command (The axis will move up to the intermediate point.)<br>♦Skip command<br>♦Machine coordinate system selection command<br>♦Tool exchange position return<br>♦Rotation center error compensation (Compensation for angle deviation) | G28 - G30<br>G31<br>G53 |

(2) If any of the following commands is issued to the related axes of control axis superimposition, an operation error will occur.

♦Arbitrary axis superimposition command (M01 1004)
♦Auxiliary axis synchronization (M01 1004)
♦Synchronous control (M01 1036)
♦Control axis synchronization between part systems command (M01 1037)

(3) If any of the following commands is executed in the part system in which the related axes to control axis superimposition exists, the program error (P29) will occur.

♦High-speed machining mode II
♦High-speed high-accuracy control I
♦High-speed high-accuracy control II

### Axes that cannot be specified as the related axes of control axis superimposition

(1) If an axis of the part system, for which either of the following functions is being executed, is specified as the related axis of control axis superimposition, these functions will be cancelled and the control axis superimposition will be enabled.
When the control axis superimposition ends, the function will resume.

♦High-speed machining mode II
♦High-accuracy control
♦High-speed High-accuracy control I/II

(2) If any of the following axes is specified as the related axis of control axis superimposition, the operation error (M01 1004) will occur.

♦Master axis or slave axis of synchronous control
♦Reference axis or synchronized axis of control axis synchronization between part systems
♦Reference axis or superimposed axis of arbitrary axis superimposition command
♦Reference axis or synchronized axis being synchronized with auxiliary axis
♦Reference axis, 1st superimposed axis or 2nd superimposed axis of 3 axes tandem superimposition
♦Both reference axis and superimposed axis are reference axis and superimposed axis of superimposition
♦Milling interpolation axis
♦Axis in fixed cycle mode
♦Axis in mirror image for facing tool posts
♦Axis in the external mirror image
♦Axis in parameter mirror image
♦Axis with servo OFF in spindle position control

(3) If any of the following axes is specified as the related axis of control axis superimposition, the program error (P520) will occur.

- Basis axis of inclined axis control/selection axis of inclined axis control
  (axis whose parameter "#2071 s_axis" is set to a value other than "0" in the MTB specifications)
- Axis in a part system in which acceleration/deceleration before interpolation is selected
  (axis whose parameter "#1205 G0bdcc" (acceleration/deceleration before G0 interpolation) is set to a value other than "0" in the MTB specifications)
- Axis in the part system in which rotation center error compensation is valid

(4) If an axis of part system performing the following function is specified as the related axis of control axis superimposition, the program error (P34) will occur.

- Coordinate rotation by program

**Other functions**

| Function name | Operation |
|---|---|
| Machine lock | When conducting a machine lock to the superimposed axis, only the commands towards the superimposed axis will be machine locked.<br>Note that, movements accompanying the movement of the reference axis will not be machine locked but the machine will move. |
| Manual arbitrary reverse run | The G126 command cannot run reversed. |
| Stroke end | Stroke end, stored stroke limit, chuck/tailstock barrier check are checked in the machine position.<br>If the stroke end, stored stroke limit, or chuck/tailstock barrier check alarm occurs to an axis of the part system containing the related axis of superimposition, the part system containing the reference axis and superimposed axis will stop. |
| Stored stroke limit | |
| Chuck Barrier/Tailstock Barrier check | |
| Graphic check | Start or cancel of superimposition by the superimposition command is invalid.<br>The graphic trace in the superimposition may draw a path different from the machining program path. |
| Program restart | Start or cancel of superimposition by the superimposition command is invalid.<br>Do not use restart search function to commands in the superimposition because the restart position cannot be guaranteed depending on the superimposition movement amount. |
| Servo OFF | The superimposition will be canceled if a "Servo OFF" signal is entered to the superimposed axis/reference axis in the control axis superimposition.<br>Make sure that the superimposed axis/reference axis is stopped before entering a "Servo OFF" signal.<br>To confirm the axis stop, check if "Axis movement +" signal and "Axis movement -" signal are turned OFF. |
| Interlock | When conducting an interlock to the superimposed axis, only the commands towards the superimposed axis will be interlocked.<br>Movements accompanying the movement of the reference axis will not be interlocked. |
| Arbitrary axis exchange control | Commands can be issued to the related axis of superimposition.<br>If an axis, which has been set as the uncontrolled axis through the arbitrary axis exchange, becomes the superimposed axis of the superimposition, an axis in a part system having uncontrolled axis will be used to check for axis stop at the start/end of superimposition.<br>In addition, an axis in a part system, which contains an axis being moved to the start or end position of superimposition, cannot be exchanged as an arbitrary axis. If arbitrary axis exchange is commanded, an operation error (M01 1101) will occur. |
| Synchronous tapping cycle | When the synchronous tapping is performed with the superimposed axis, set the following values to the gain for the synchronous tapping and the normal gain.<br>•#2203 SV003(PGN) = #2017 tap_g (#2249 SV049(PGN1sp))<br>•#2204 SV004(PGN2) = #2250 SV050(PGN2sp)<br>•#2257 SV057(SHGC) = #2258 SV058(SHGCsp) |

| Function name | Operation |
|---|---|
| High-speed synchronous tapping | When the high-speed synchronous tapping is performed with the superimposed axis, an in-position check is performed at R point as in-position check cannot be canceled for traveling from the initial point to R point because of the data communication specification between NC and the drive unit. |
| Deceleration check | Even if the servo in-position standby condition is applied by the deceleration check function, during the superimposition control, movement of the superimposed axis will be completed when the smoothing reached zero, and execution of the next block will start.<br>Movement of the superimposed axis will be completed when the machine is put into the standby state for smoothing of superimposition component to reach zero.<br> 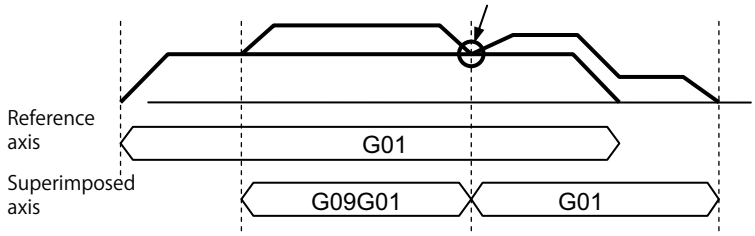 |
| NC reset<br>(Reset 1, reset 2 and reset & rewind) | When the system is reset during the superimposition, select whether to cancel the superimposition by the parameter "#1280 ext16/bit3".<br>The rapid traverse rate, cutting feedrate clamp speed, and time constant will return to the values set in the parameters after the superimposition is canceled due to the reset.<br>Apply the reset to all part systems which are related to the superimposition at a time. |
| Emergency stop | When the emergency stop occurs during the superimposition, the superimposition will be canceled.<br>The rapid traverse rate, cutting feedrate clamp speed, and time constant will return to the values set in the parameters after the superimposition is canceled due to the emergency stop. |

| Function name | Operation |
|---|---|
| Rotation center error compensation | [Operation in 2-axis superimposition]<br>•Perform the rotation center error compensation for the reference axis. When the rotation center error compensation is performed for the superimposed axis, only the superimposed axis is compensated for. Therefore, the relative positional relationship between the reference axis and the superimposed axis may be broken.<br>•During superimposition, the rotation center error compensation amount of the reference axis is applied to the superimposed axis.<br>•If the rotation center error compensation is commanded to both the reference axis and the superimposed axis, an operation error (M01 1003) will occur. To cancel the alarm, turn the "Rotation center error compensation enabled" signal (RCEE) OFF.<br>•When this function is combined with another one, the operation varies depending on the MTB specifications (parameter "#1450 5axis_Spec/bit5"). For details, refer to "19.3 Rotation Center Error Compensation (Precautions for Creating a Machining Program)". |
| | [Operation in 3-axis tandem superimposition]<br>•Perform the rotation center error compensation for the reference axis. When the rotation center error compensation is performed for the 1st or 2nd superimposed axis, the relative positional relationship with the reference axis may be broken. (The rotation center error compensation amount of the 1st superimposed axis is applied to the 2nd superimposed axis.)<br>•The rotation center error compensation amount of the reference axis is applied to the 1st and 2nd superimposed axes.<br>•If the rotation center error compensation is commanded to two or more axes of the reference axis, 1st superimposed axis, and 2nd superimposed axis, an operation error (M01 1003) will occur. To cancel the alarm, turn the "Rotation center error compensation enabled" signal (RCEE) OFF.<br>•When this function is combined with another one, the operation varies depending on the MTB specifications (parameter "#1450 5axis_Spec/bit5"). For details, refer to "19.3 Rotation Center Error Compensation (Precautions for Creating a Machining Program)". |

## Precautions

### Superimposition start command and precautions during operation

(1) The superimposition start command can be issued from a part system which does not contain the superimposed axis/reference axis.

(2) The axis name set in the parameter "#1022 axname2" must be used to issue the superimposition start command. A program error (P520) will occur if an axis which is not set in the parameter is commanded. Parameter "#1022 axname2" depends on the MTB specifications.

(3) Program error (P520) will occur if a same axis is designated as the superimposed axis and reference axis at the superimposition start command.

(4) Program error (P33) will occur if P address is written without comma at the superimposition start command.

(5) A program error (P33) will occur if G126 alone is issued.

(6) Program error (P520) will occur if a rotary axis is selected as the superimposed axis/reference axis.

(7) In G126 block, a superimposition command can be issued only to one set of axes. Program error (P33) will occur if more than 2 sets are commanded.

(8) Issue this command alone in a block.

(9) When P command is P0, the superimposed axis workpiece coordinate zero point overlaps with that of the reference axis.

(10) When there is no P command, the superimposed axis workpiece coordinate zero point will be same as before the superimposition start command.

(11) A program error (P35) will occur if a value exceeding the command range is commanded by P.

(12) If G126 is commanded where there is no specifications for control axis superimposition, a program error (P39) will occur.

(13) G126 command is enabled with the G code lists 2, 3, 4 and 5. If G126 is commanded with the G code 6 or 7, the program error (P34) will occur.

(14) A program error (P520) will occur if a rotary axis is selected for either the reference axis or the superimposed axis.

### Precautions for superimposition end command

(1) The superimposition end command can be issued from a part system which does not contain the superimposed axis/reference axis.

(2) The axis name set in the parameter "#1022 axname2" must be used to issue the superimposition end command. A program error (P520) will occur if an axis which is not set in the parameter is commanded. Parameter "#1022 axname2" depends on the MTB specifications.

(3) The superimposition end command will be ignored, if an axis other than superimposed axes is commanded.

(4) A program error (P33) will occur if G126 alone is issued.

(5) In G126 block, a superimposition end command can be issued to only one superimposed axis. A program error (P33) will occur if more than one axis is commanded.

(6) Issue this command alone in a block.

### Other precautions

(1) When being reset during the superimposition, the operation depends on the MTB specifications (parameter "#1280 ext16/bit3").

(2) A timing synchronization operation must be conducted in the block just before the superimposition start/end command, in order to stop the superimposed axis/reference axis and maintain timing between the superimposed axis/reference axis.

(3) Set the relative polarity of the control axes to the parameter (#2143 polar). Any axis can be set as the reference axis in the polarity setting.

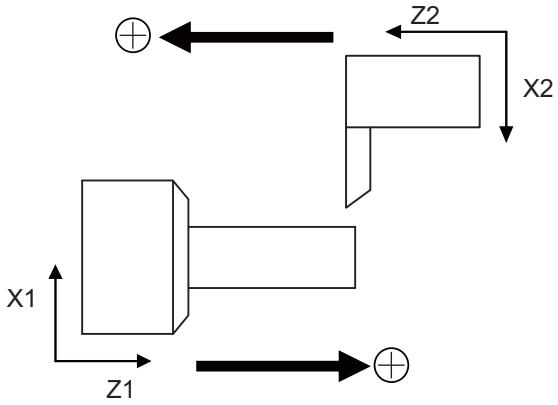


(4) The operation error (1004) will occur if a superimposition start command is issued to a superimposed axis or reference axis with other axis before performing a superimposition end command.

(5) Do not use restart search function to commands in the control axis superimposition because the restart position cannot be guaranteed depending on the superimposition movement amount.

(6) The graphic trace in the control axis superimposition may draw a path different from the machining program path.

(7) When conducting an interlock to the superimposed axis, only the commands towards the superimposed axis will be interlocked. Movements accompanying the movement of the reference axis will not be interlocked.

(8) When the emergency stop occurs during the control axis superimposition, the control axis synchronization between part systems will be canceled.
The rapid traverse rate, cutting feedrate clamp speed, and time constant will return to the parameter values set by the MTB after the control axis synchronization between part systems is canceled due to the emergency stop.

(9) The superimposition will be canceled if a "servo OFF" signal is entered to the superimposed axis/reference axis in the control axis superimposition. The superimposed axis/reference axis must be stopped before entering a "servo OFF" signal. To confirm the axis stop, check if "Axis movement +" and "Axis movement -" signals are turned OFF.
The method to check the signal operating conditions depends on the MTB specifications.

(10) Start/end of control axis superimposition toward a part system containing the superimposed axis/ reference axis must be issued after all the axes are stopped. To stop all the axes, note that a manual command, chopping, and other factors which is not a machining program may cause an axis to move.

(11) A command deceleration check will be performed to a superimposed axis command even when an in-position check is valid.

(12) "All axes in-position" signal of the part system containing a superimposed axis will be turned on if the movements commanded by the part system are completed, even when the superimposed axis is moving according to the reference axis.

(13) The "reset" signals for the part systems containing the superimposed axis and reference axis must be input at the same time.

(14) If the address P of G126 is commanded from an axis which does not contain the superimposed axis, the setting of workpiece zero point by the address P will become valid from the block which is next to the block being executed in the part system containing the superimposed axis.

| [1st part system] | | [2nd part system] | |
|---|---|---|---|
| : | | : | |
| : | | : | |
| !L1 ; | | !L1 ; | |
| G126 Z2=Z1 ,P20. ; | Superimposing operation | | |
| !L2 ; | | !L2 ; | Execute G126 while timing synchronization operation |
| G00 X46. Z2. ; | Superimposing operation | G01 X-10 F100 ; | From this block, the setting of the workpiece zero point becomes valid |
| G01 Z-50. F0.1 ; | | Z60. ; | |
| X54. ; | | : | |
| : | | : | |
| : | | : | |
| : | | : | |
| !L3 ; | | !L3 ; | |
| G126 Z2 ; | Superimposing operation | | |
| !L4 ; | | !L4 ; | Execute G126 while timing synchronization operation |
| : | | G01 X-10 F100 ; | From this block, the workpiece zero point returns to the zero point. |
| : | | : | |

(15) To cancel the superimposition, reset the G92 shift amount of the superimposed axis to the amount before the superimposition start. The G92 shift amount set by the G50 (G92) command during the superimposition will be invalidated when canceling the superimposition.

(16) If the following parameters have not been set or a value outside the setting range has been set for axes related to superimposition, an operation error (M01 1070) will occur.

| Cutting clamp speed | Rapid traverse rate |
|---|---|
| #2091 plclamp<br>#2629 pl3clamp<br>#2630 pl3clamp2 | #2090 plrapid<br>#2621 plrapid2<br>#2626 pl3rapid<br>#2627 pl3rapid2<br>#2628 pl3rapid3 |

## 16.4.2 Arbitrary Axis Superimposition ; G156

### Function and purpose

With this function, the arbitrary control axis in other part systems can be moved by superimposing on the movement command for the arbitrary control axis in own part system.
The superimposition control start command allows the workpiece coordinate system of the superimposed axis to switch for superimposition control, and the superimposed axis to move to the superimposition start position. (Refer to following figure.)
After the start command is issued, the superimposition control takes effect until the superimposition control end command is issued.
The superimposition control end command allows the workpiece coordinate system of the superimposed axis to return to the state before the superimposition control, that has been switched for superimposition control, and the superimposed axis to move to the superimposition end position.
This function can be used in multi-part systems of two or more part systems.

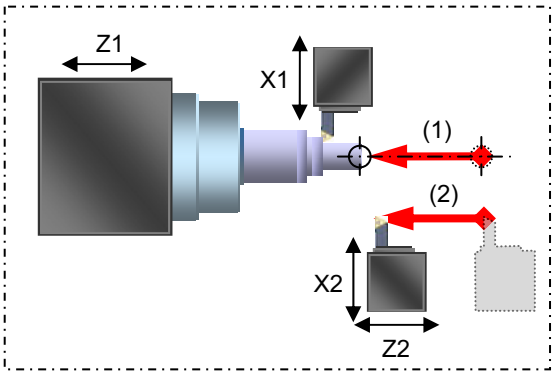


It is assumed that superimposition is performed in the following axis configuration.

•Z1: Reference axis
•Z2: Superimposed axis
[Start of arbitrary axis superimposition control]
G156 Z2=Z1 ,P20. D10. R30.;

(1) Switching of workpiece zero point of superimposed axis (Z2)

(2) Movement of superimposed axis (Z2) to superimposition control start position

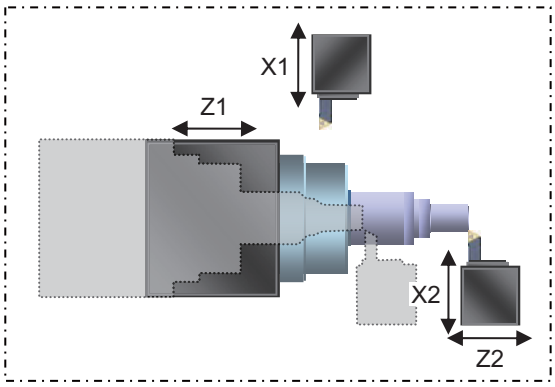


[During arbitrary axis superimposition control]
Z2 axis (superimposed axis) moves by superimposing on the Z1 axis (reference axis).

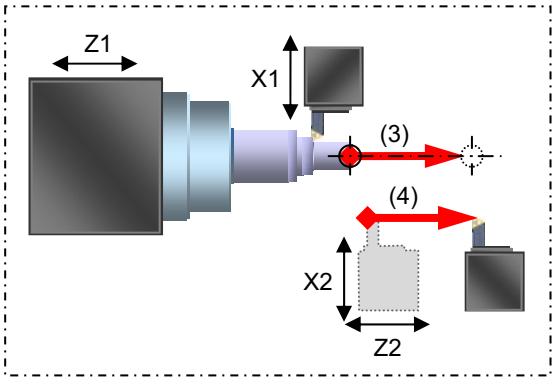


[End of arbitrary axis superimposition control]
G156 Z2 ,Q20.;

(3) Restore the workpiece zero point of the superimposed axis (Z2) to the position before the arbitrary axis superimposition.

(4) Move the superimposed axis (Z2) to the superimposition control end position.

The following describes the meanings of the terms used in this specification.

| Term | Meaning |
|---|---|
| Reference axis | The basic in the arbitrary axis superimposition function (moves only by its own axis command). |
| Superimposed axis | The axis which moves by the reference axis movement in the arbitrary axis superimposition (moves by reference axis command). |
| Related axis of arbitrary axis superimposition | The reference axis and superimposed axis of arbitrary axis superimposition. |

## Command format

### Arbitrary axis superimposition start command

**G156 Superimposed axis name = Reference axis name , P_ D_ R_ F_;**

| | |
|---|---|
| Superimposed axis name | The axis to be operated as superimposed axis (The axis name set in the parameter "#1022 axname2" (two characters)) |
| Reference axis name | The axis to be operated as referenced axis (The axis name set in the parameter "#1022 axname2" (two characters))<br>If the symbol "-" is added in front of the reference axis name, the superimposed axis can be synchronized in the opposite direction of the reference axis. |
| , (comma) | Specify as delimiter when the address is needed to be assigned after "superimposed axis name = reference name". |
| P | Designation of the superimposed axis workpiece coordinate system |
| D | Superimposed axis workpiece coordinate system offset amount |
| R | Superimposition control start position |
| F | Moving speed to superimposition control start position |

Command each address with a radius value.

If a value exceeding the command range is issued, a program error (P35) will occur.

| Address | Meaning | Command range (unit) | Remarks |
|---|---|---|---|
| P | Designation of superimposed axis workpiece coordinate system | Range of coordinate position command (mm/inch)<br>(Decimal point command is possible.) | ♦Commands the workpiece coordinate system's zero point of the superimposed axis with the workpiece coordinate system's position of the reference axis.<br>♦When there is no P command, it will be handled as P0.<br>(The workpiece zero points of the reference axis and the superimposed axis will coincide.) |
| D | Superimposed axis workpiece coordinate system offset amount | Range of coordinate position command (mm/inch)<br>(Decimal point command is possible.) | ♦Command the workpiece offset amount when the superimposed axis is used independently.<br>♦When there is no D command, it will be handled as D0. |
| R | Superimposition control start position | Range of coordinate position command (mm/inch)<br>(Decimal point command is possible.) | ♦Command the position of the superimposed axis when starting the superimposition control with the superimposed axis workpiece coordinate system after the arbitrary axis superimposition command.<br>♦If there is no address R command, the superimposition control is started from the position without moving the superimposed axis. |
| F | Moving speed to superimposition control start position | Range of speed command (mm/min, inch/min)<br>(Decimal point command is possible.)<br>(Asynchronous) | ♦Command the moving speed of the superimposed axis to the superimposition control start position.<br>♦If there is no F command, the axis will move at the rapid traverse rate.<br>♦The F command is unmodal.<br>♦The F command is asynchronous feed (feed per minute) only.<br>Even in the synchronous feed (feed per revolution) mode, this will be handled as asynchronous feed (feed per minute). |

## Arbitrary axis superimposition end command

**G156 Superimposed axis name, Q/R_ F_;**

| | |
|---|---|
| Superimposed axis name | The axis to be operated as superimposed axis (The axis name set in the parameter "#1022 axname2" (two characters)) |
| , (comma) | Specify as delimiter when the address is needed to be assigned after "superimposed axis name". |
| Q | Specify the position to end the superimposition control with a basic machine coordinate zero point. |
| R | Specify the position to end the superimposition control with a workpiece coordinate system. |
| F | Moving speed to superimposition control end position |

Command each address with a radius value.

If a value exceeding the command range is issued, a program error (P35) will occur.

| Address | Meaning | Command range (unit) | Remarks |
|---|---|---|---|
| Q | Designation of superimposed axis workpiece coordinate system | Range of coordinate position command (mm/inch) (Decimal point command is possible.) | ♦Command the position of the superimposed axis when ending the superimposition control with a position on the basic machine coordinate system.<br>♦If there is neither address Q nor R command, the superimposition control is ended in the position without moving the superimposed axis.<br>♦Q takes precedence over R if Q command is issued simultaneously with R command. |
| R | Superimposition control start position | Range of coordinate position command (mm/inch) (Decimal point command is possible.) | ♦Command the position of the superimposed axis when ending the superimposition control with the superimposed axis workpiece coordinate system before the arbitrary axis superimposition command.<br>♦If there is neither address Q nor R command, the superimposition control is ended in the position without moving the superimposed axis.<br>♦R takes precedence over Q if R command is issued simultaneously with Q command. |
| F | Moving speed to superimposition control end position | Range of speed command (mm/min, inch/min) (Decimal point command is possible.) (Asynchronous) | ♦Command the moving speed of the superimposed axis to the superimposition control end position.<br>♦If there is no F command, the axis will move at the rapid traverse rate.<br>♦The F command is unmodal.<br>♦The F command is asynchronous feed (feed per minute) only.<br>Even in the synchronous feed (feed per revolution) mode, this will be handled as asynchronous feed (feed per minute). |

## Detailed description

The following operation example explains the a case when superimposing Z2 axis (superimposed axis) onto Z1 axis (reference axis).

- Z1: Reference axis
- Z2: Superimposed axis

### Operation of each axis when the arbitrary axis superimposition start is commanded

The operation of the superimposition start command differs according to the state of the related axis of arbitrary axis superimposition.
The superimposition start command automatically executes the following operation.

**Command:G156 Z2=Z1 , Pp Dd Rr;**

(1) If the reference axis and superimposed axis are stopped when the arbitrary axis superimposition start is commanded

(a) Set the superimposed axis workpiece zero point by a P command, D command, and the relative distance of the basic machine zero point between the reference axis (Z1) and the superimposed axis (Z2) (parameter "#2144 baseps").

(b) Change the acceleration/deceleration time constants of the reference axis and superimposed axis to the time constants during the superimposition control ("#2092 plG0tL","#2093 plG0t1","#2094 plG1tL","#2095 plG1t1").

(c) The superimposed axis starts to move to the start position of arbitrary axis superimposition.

(d) The start operation of the arbitrary axis superimposition control will be completed when the superimposed axis reaches the start position of arbitrary axis superimposition.
The superimposed axis workpiece coordinate values switch for the arbitrary axis superimposition control at the start of the next block of the superimposed axis part system.

(e) The reference axis starts to move.

[Reference axis]

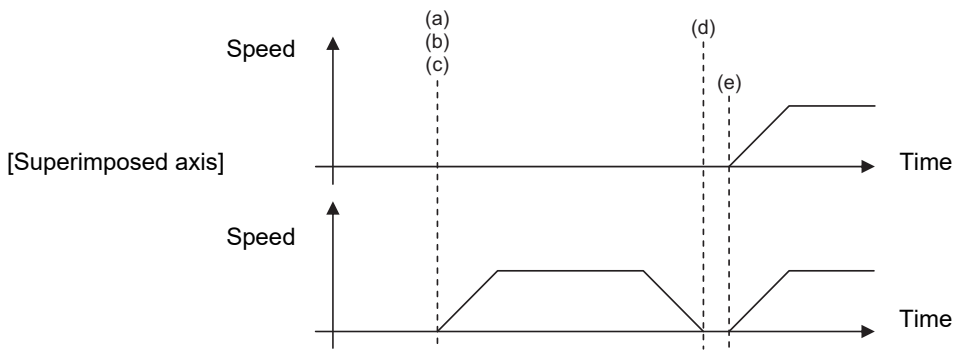


Movement to start position of arbitrary axis superimposition

<Note>

- The superimposed axis workpiece coordinate values (display) are switched for the arbitrary axis superimposition control at the start of the next block after the movement to the start position of arbitrary axis superimposition is complete. If there is no R command (movement to the start position of arbitrary axis superimposition), it is executed in the next block of the superimposed axis part system after the arbitrary axis superimposition control start command.

(2) If the reference axis is moving when the arbitrary axis superimposition start is commanded from the superimposed axis part system

(a) The operation will wait until smoothing for all axes of the reference axis part system reached zero.

(b) Set the superimposed axis workpiece zero point by a P command, D command, and the relative distance of the basic machine zero point between the reference axis (Z1) and the superimposed axis (Z2) (parameter "#2144 baseps"). Change the acceleration/deceleration time constants of the reference axis and superimposed axis to the time constants during the superimposition control ("#2092 pIG0tL","#2093 pIG0t1","#2094 pIG1tL","#2095 pIG1t1"). At this time, the arbitrary axis superimposition control becomes valid, and the workpiece coordinate system of the superimposed axis will synchronize with the reference axis movement.

(c) The superimposed axis starts to move to the start position of arbitrary axis superimposition.

(d) The reference axis starts to move.

(e) If the reference axis starts to move before the superimposed axis reaches the start position of arbitrary axis superimposition, the superimposed axis moves by composing the movement amount synchronized with the reference axis and the movement amount to the start position of arbitrary axis superimposition.

(f) The start operation of the arbitrary axis superimposition control will be completed when the superimposed axis reaches the start position of arbitrary axis superimposition.

[Reference axis]

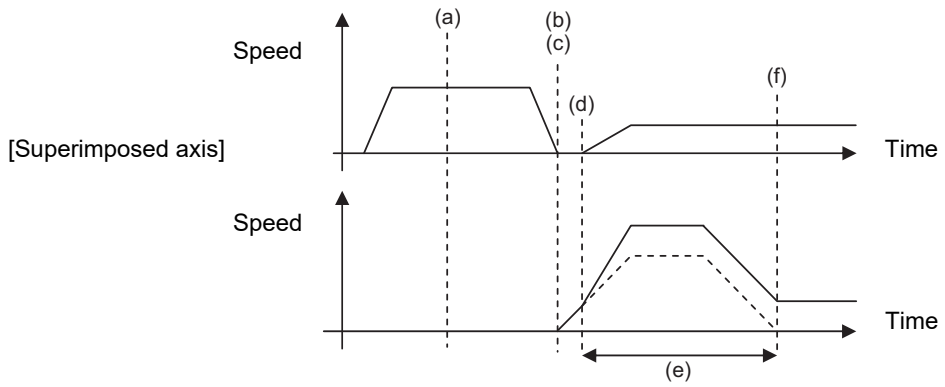


The broken line portion indicates the movement amount to the start position of arbitrary axis superimposition.

(3) If the superimposed axis is moving when the arbitrary axis superimposition start is commanded from the reference axis part system

(a) The operation will wait until smoothing for all axes of the superimposed axis part system reached zero. (*1)

(b) Set the superimposed axis workpiece zero point by a P command, D command, and the relative distance of the basic machine zero point between the reference axis (Z1) and the superimposed axis (Z2) (parameter "#2144 baseps").
Change the acceleration/deceleration time constants of the reference axis and superimposed axis to the time constants during the superimposition control ("#2092 pIG0tL","#2093 pIG0t1","#2094 pIG1tL","#2095 pIG1t1").

(c) The superimposed axis starts to move to the start position of arbitrary axis superimposition.

(d) The start operation of the arbitrary axis superimposition control will be completed when the superimposed axis reaches the start position of arbitrary axis superimposition. The superimposed axis workpiece coordinate values switch for the arbitrary axis superimposition control at the start of the next block of the superimposed axis part system.

(e) The reference axis starts to move.

[Reference axis]

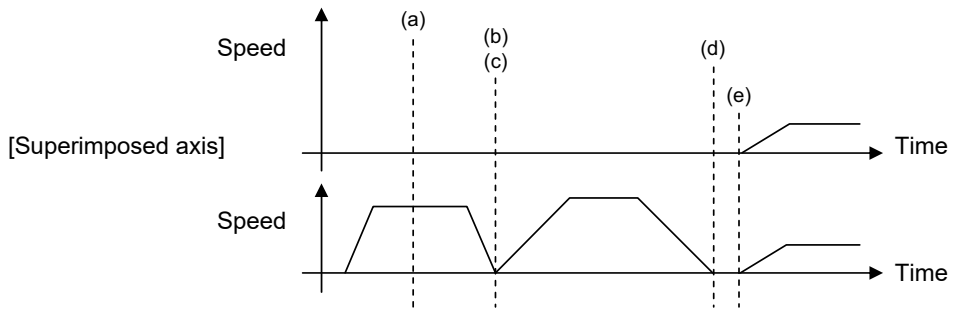


(*1) Smoothing becomes zero even if the operation is stopped by feed hold, interlock, etc.

### Workpiece coordinate and tool compensation when the arbitrary axis superimposition start is commanded

**Command:G156 Z2=Z1 , Pp Dd Rr;**

The following operation example explains the start command to superimpose Z2 axis onto Z1 axis while the relationship between the workpiece coordinate, tool compensation, and addresses P, D and R, when the arbitrary axis superimposition start is commanded is as shown below.

(1) The workpiece zero point of Z2 axis superimposition can be calculated with the following expression.

Workpiece zero point of Z2 axis superimposition

= Workpiece zero point of Z1 axis (+ reference axis tool compensation amount "tb")
+ p (P command value) + d (D command value)

(2) The movement to the superimposition control start position is shifted by the amount commanded by R from the workpiece zero point of Z2 axis superimposition (+ superimposition tool compensation amount tp).

<Note>

- Switching of the workpiece coordinate system and the validity of tool compensation with reference to the movement to the superimposition start position when the arbitrary axis superimposition control start is commanded depend on the MTB specifications (parameter "#1244 set16/bit3").
  "tb" (reference axis tool compensation amount) and "tp" (superimposed axis tool compensation amount) in above (1) and (2) are added when this parameter is set to enable tool compensation.

The following figure shows the relationship between the workpiece zero point of Z2 axis superimposition, superimposition control start position, tool compensation, addresses P, D and R at the time the arbitrary axis superimposition start is commanded, in a case where (a) relative polarity is present and a case where (b) relative polarity is absent.

(a) Relative polarity (positive) (the value of "#2143 polar" is "0" for both the reference axis and the superimposed axis)

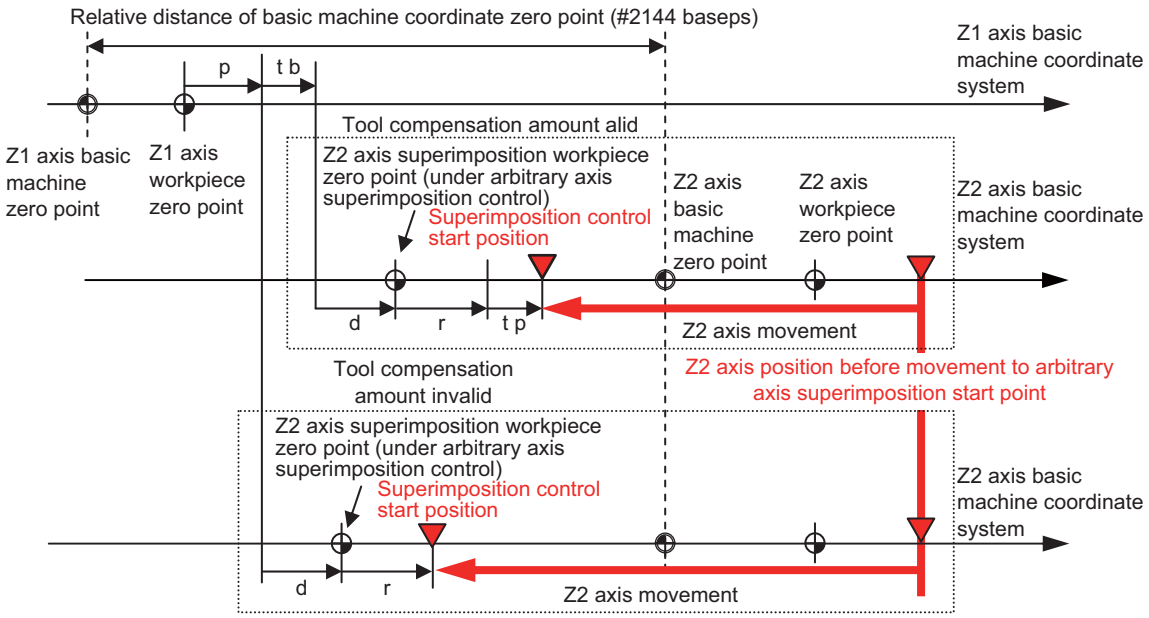

(b) Relative polarity (negative) (the value of "#2143 polar" is "0" for the reference axis and "1" for the superimposed axis)

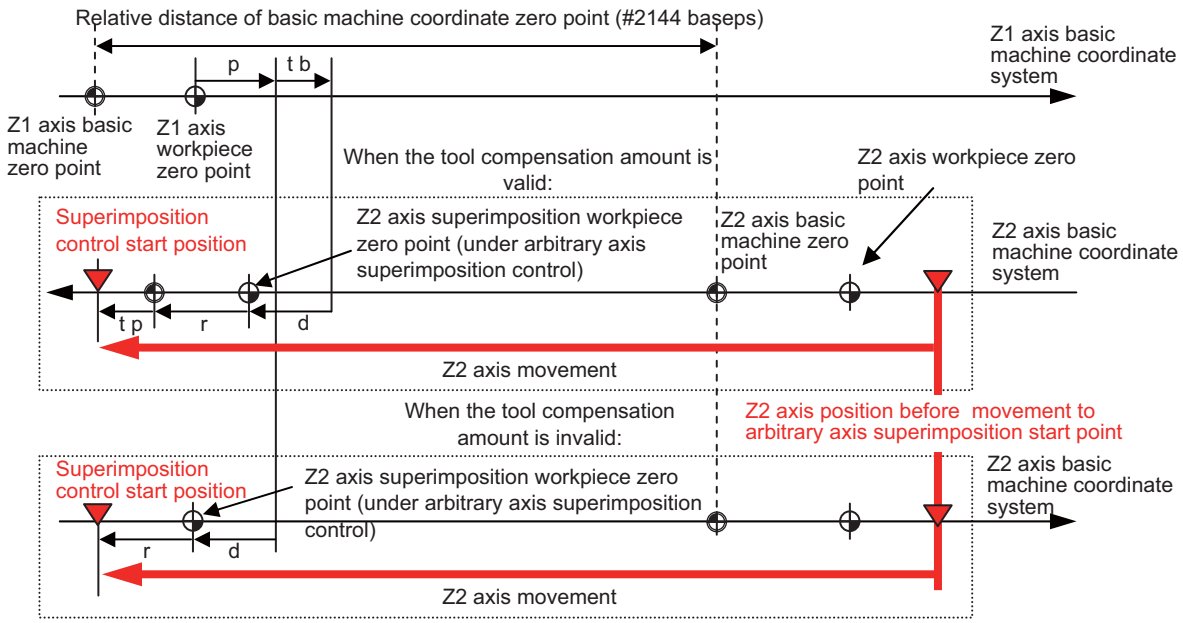


## Operation during arbitrary axis superimposition (workpiece coordinate system)

When the movement of reference axis is executed, the superimposed axis workpiece coordinate zero point moves according to the movement of the superimposed axis.
The superimposed axis moves as much as the reference axis to maintain the workpiece position.

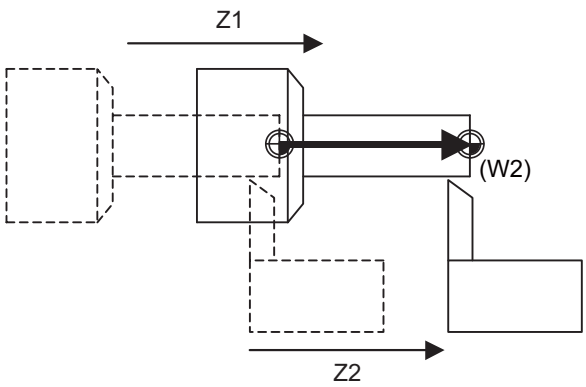

### Feedrate of the reference axis and superimposed axis

If the movement command is issued to both the reference axis and the superimposed axis, the movement rate of the superimposed axis will be faster than when the movement is commanded only by the superimposed axis as long as the moving direction of the superimposed axis synchronized with the reference axis movement is the same as that commanded only by the superimposed axis.

In this case, in the normal clamp speed process, as the speed may become faster than that of the motor capacity, the rapid traverse rate and clamp rate of the reference axis and superimposed axis are calculated according to the following table.

| Superimposed axis | | Reference axis | | | |
|---|---|---|---|---|---|
| | | Stop | Rapid traverse | Cutting feed | Thread cutting |
| Stop | | Reference axis: Stop<br>Superimposed axis: Stop | Reference axis: [#2001 rapid]<br>Superimposed axis: Stop | Reference axis: [#2002 clamp]<br>Superimposed axis: Stop | Reference axis: (*1)<br>Superimposed axis: Stop |
| Rapid traverse | Move in the same direction as the reference axis | Reference axis: Stop<br>Superimposed axis: [#2001 rapid] | Reference axis: [#2090 plrapid]<br>Superimposed axis: [#2090 plrapid] | Reference axis: [#2002 clamp]<br>Superimposed axis: [#2621 plrapid2] | Reference axis: (*1)<br>Superimposed axis: [#2621 plrapid2] |
| | Move to the opposite direction of the reference axis | | Reference axis: [#2001 rapid]<br>Superimposed axis: [#2001 rapid] | Reference axis: [#2002 clamp]<br>Superimposed axis: [#2001 rapid] | Reference axis: (*1)<br>Superimposed axis: [#2001 rapid] |
| Cutting feed | Move in the same direction as the reference axis | Reference axis: Stop<br>Superimposed axis: [#2002 clamp] | Reference axis: [#2621 plrapid2]<br>Superimposed axis: [#2002 clamp] | Reference axis: [#2091 plclamp]<br>Superimposed axis: [#2091 plclamp] | Reference axis: (*1)<br>Superimposed axis: [#2091 plclamp] |
| | Move to the opposite direction of the reference axis | | Reference axis: [#2001 rapid]<br>Superimposed axis: [#2002 clamp] | Reference axis: [#2002 clamp]<br>Superimposed axis: [#2002 clamp] | Reference axis: (*1)<br>Superimposed axis: [#2002 clamp] |
| Thread cutting | Move in the same direction as the reference axis | Reference axis: Stop<br>Superimposed axis: (*1) | Reference axis: [#2621 plrapid2]<br>Superimposed axis: (*1) | Reference axis: [#2091 plclamp]<br>Superimposed axis: (*1) | Reference axis: (*1)<br>Superimposed axis: (*1) |
| | Move to the opposite direction of the reference axis | | Reference axis: [#2001 rapid]<br>Superimposed axis: (*1) | Reference axis: [#2002 clamp]<br>Superimposed axis: (*1) | Reference axis: (*1)<br>Superimposed axis: (*1) |

(*1) If the spindle rotation speed is faster than [#2091 plclamp] when thread cutting is started, cutting will not start.
(The operation error (M01 0107) will occur.)

In case of a 2-axis superimposition (where there are two superimposed axes while there is one reference axis), the rapid traverse rate and clamp rate of the superimposed axis are calculated according to the following table.
The rapid traverse rate and clamp rate of the reference axis is calculated using either one of the smaller that are determined according to the above table, from the relationship between the reference axis and the superimposed axis of the respective sets of superimposition.

(Example) Clamp rate for 2-axis superimposition (where there are two superimposed axes (Z2 and Z3) while there is one reference axis (Z1))

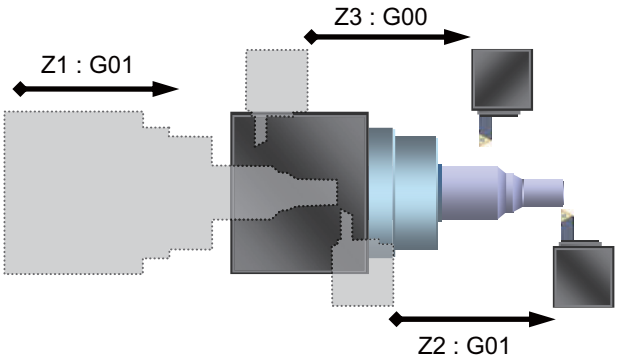


| | | |
|---|---|---|
| Z1 reference axis: Cutting feed, Z2 superimposed axis: Cutting feed | -> | The Z2 superimposed axis follows [#2091 plclamp]. |
| Z1 reference axis: Cutting feed, Z3 superimposed axis: Rapid traverse | -> | The Z3 superimposed axis follows [#2621 plrapid2]. |
| Z1 reference axis: Cutting feed, Z2 superimposed axis: Cutting feed | -> | The Z1 reference axis follows [#2091 plclamp]. |
| Z1 reference axis: Cutting feed, Z3 superimposed axis: Rapid traverse | -> | The Z1 reference axis will follow [#2002 clamp]. However, the reference axis Z1 will compare [#2091 plclamp] with clamp, and use either one of the smaller for calculation as the clamp value. |

## Composition of axis movement for superimposed axis

If the movement command is issued to both the reference axis and the superimposed axis, the movement rate of the superimposed axis will be faster than when the movement is commanded only by the superimposed axis as long as the moving direction of the superimposed axis synchronized with the reference axis movement is the same as that commanded only by the superimposed axis.
The superimposed axis will move at (the reference axis movement speed + the superimposed axis movement speed) during the arbitrary axis superimposition control.
For details, refer to the example of 2-axis superimposition in "Composition of axis movement for superimposed axis" of "Control axis superimposition;G126".

### Operation of each axis when the arbitrary axis superimposition end is commanded

The following explains the end operation from the arbitrary axis superimposition state of Z1 axis (reference axis) and Z2 axis (superimposed axis).

| **Command: G156 Z2 , Qq (Rr) Ff;** |
|---|

(1) If the reference axis and superimposed axis are stopped when the arbitrary axis superimposition end is commanded

(a) Return to the normal the acceleration/deceleration time constant of the superimposed axis.

(b) Return the superimposed axis workpiece coordinate zero point to where it was before the superimposition command was issued.

(c) Move the superimposed axis to the arbitrary axis superimposition end position.

| | |
|---|---|
| When R command is issued: | Move the axis to the position shifted by R command (+ tool compensation amount) from the workpiece coordinate zero point before the arbitrary axis superimposition command.<br>(+ tool compensation amount) is added only if the tool compensation amount is valid ("#1244 set16/bit3" is "ON"). |
| When Q command is issued: | Move the axis to the basic machine coordinate position commanded by Q.<br>At this time, tool compensation is temporarily canceled. |

(d) Return to the normal the acceleration/deceleration time constant of the reference axis.

(e) The reference axis starts to move.

(f) The end operation of arbitrary axis superimposition control will be completed when the superimposed axis reaches the end position of arbitrary axis superimposition.

[Reference axis]

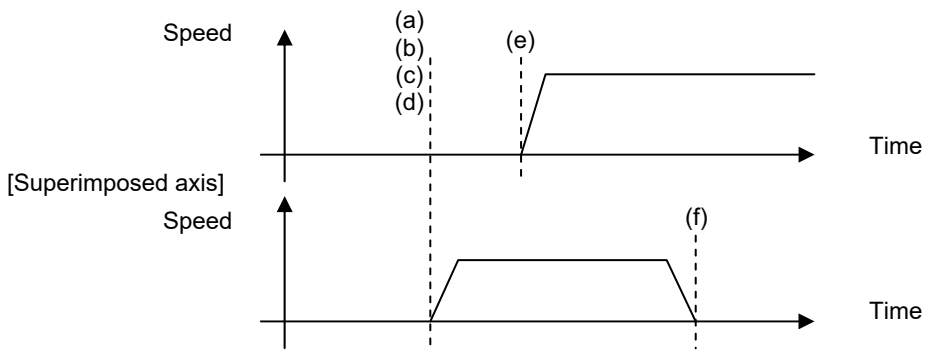


A movement command can be issued to the reference axis while the superimposed axis is moving to the arbitrary axis superimposition end position.

Since the arbitrary axis superimposition end command has been executed, the superimposed axis will not superimpose onto the reference axis movement.

(2) If the reference axis is moving when the arbitrary axis superimposition end is commanded

(a) The operation will wait until smoothing for all axes of the reference axis part system reached zero. (*1)

(b) Return to the normal the acceleration/deceleration time constant of the reference axis and superimposed axis.

(c) Return the superimposed axis workpiece coordinate zero point to where it was before the superimposition command was issued.

(d) Move the superimposed axis to the arbitrary axis superimposition end position.

(e) The end operation of arbitrary axis superimposition control will be completed when the superimposed axis reaches the end position of arbitrary axis superimposition.

[Reference axis]

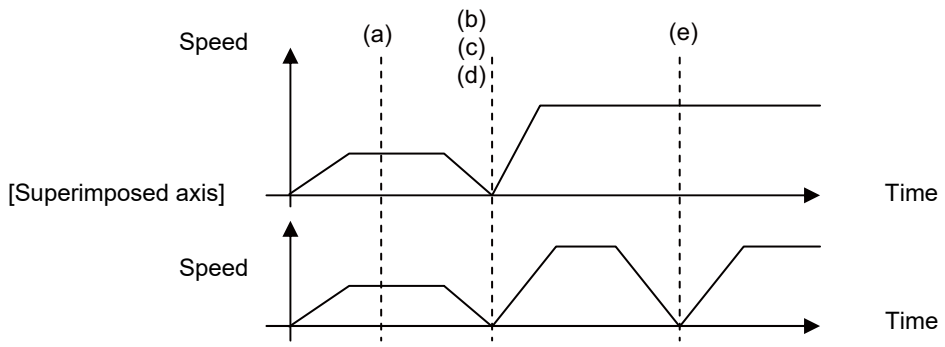


(*1) Smoothing becomes zero even if the operation is stopped by feed hold, interlock, etc.

## Workpiece coordinate and tool compensation when the arbitrary axis superimposition end is commanded

The following shows the relationship between the workpiece coordinate, tool compensation, and addresses Q and R, when the arbitrary axis superimposition end is commanded.

The following figure shows the relationship between the workpiece zero point of Z2 axis, superimposition control end position, tool compensation, addresses Q and R when the arbitrary axis superimposition end is commanded in a case of (1) Q command (the superimposition control end position is on the basic machine coordinate system) and a case of (2) R command (the superimposition control end position is on the workpiece coordinate system).

(1) Arbitrary axis superimposition end (Q command)

(Where the superimposition control end position is designated by a position on the basic machine coordinate system)

| **Command:G156 Z2 , Qq;** |
|---|

Move the axis to the basic machine coordinate position commanded by Q. At this time, tool compensation is temporarily canceled.

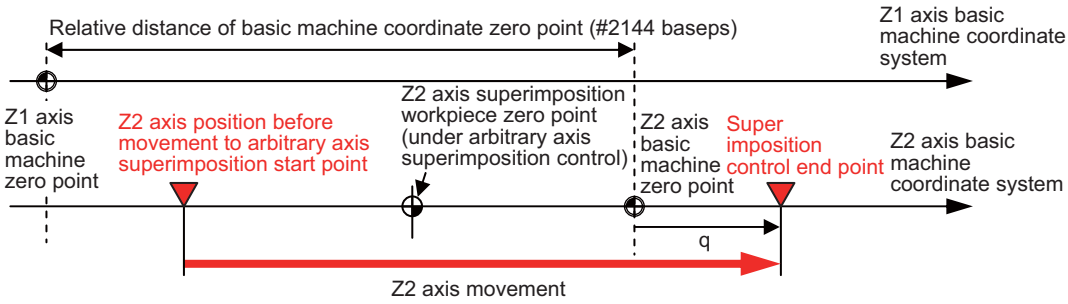

(2) Arbitrary axis superimposition end (R command)
(Where the superimposition control end position is designated by a position on the workpiece coordinate system)

**Command:G156 Z2 , Rr;**

The superimposition tool compensation amount is assumed as "tp".

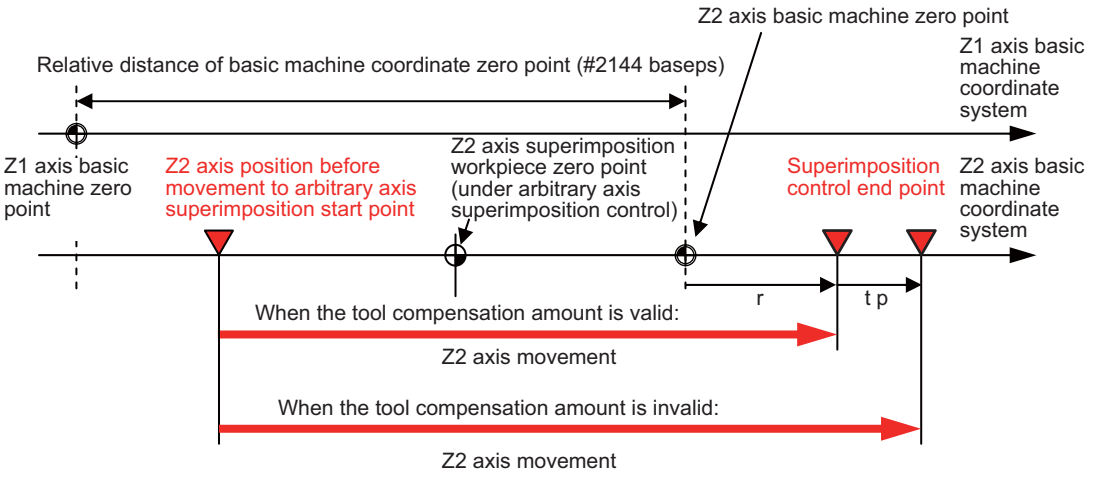


The position is shifted by the amount of the position commanded by R from workpiece coordinate zero point (+ superimposed axis tool compensation amount "tp").
The validity of tool compensation with reference to the movement to the superimposition end position when the arbitrary axis superimposition control end is commanded depends on the MTB specifications (parameter "#1244 set16/bit3").
The above "tp" value is added when this parameter is set to enable tool compensation.

## Program example

(1) Arbitrary axis superimposition command of Z1 axis (reference axis) and Z2 axis (superimposed axis)

| [1st part system] | [2nd part system] | Operation |
|---|---|---|
| : | : | |
| G00 Z25.; | : | The timing synchronization operation between part systems allows the reference axis and the superimposed axis to stop, and executes the arbitrary axis superimposition control start command. |
| | G156 Z2=Z1, P25. D5. R2.5 F1000; | Superimposes Z2 axis onto Z1 axis |
| !2 L2; | !1 L2; | |
| G01 Z22. F10; | G01 Z5. F100; | During superimposing operation |
| G01 X12. F1; | G01 X10. F1; | |
| : | : | |
| : | : | |
| : | : | |
| : | G156 Z2, Q15.; | Ends superimposition of Z2 axis |
| : | : | |

(2) Arbitrary axis superimposition command of Z1 axis (reference axis), Z2 axis (superimposed axis 1) and Z3 axis (superimposed axis 2)

| [1st part system] | [2nd part system] | [3rd part system] | Operation |
|---|---|---|---|
| : | : | : | |
| G00 Z25.; | : | : | |
| !2!3 L1; | !1!3 L1; | !1!2 L1; | The timing synchronization operation between part systems allows the reference axis and the superimposed axis to stop, and executes the arbitrary axis superimposition control start command. |
| | G156 Z2=Z1, P25. D5. R2.5 F500; | | Superimposes Z2 axis onto Z1 axis |
| | | G156 Z3=Z1, P20. D10. R5 F500; | Superimposes Z3 axis onto Z1 axis |
| !2!3 L2; | !1!3 L2; | !1!2 L2; | |
| G01 Z22. F10; | G01 Z5. F100; | G01 Z5. F100; | During superimposing operation |
| G01 X12. F1; | G01 X10. F1; | G01 X10. F1; | |
| : | : | G156 Z3, R15.; | Ends superimposition of Z3 axis At this time, superimposition of Z1 axis and Z2 axis will not end. |
| : | : | : | |
| : | : | : | |
| : | G156 Z2, Q15.; | : | Ends superimposition of Z2 axis |
| : | : | : | |

## Relationship with other functions

### Commands that cannot be issued during the arbitrary axis superimposition control

(1) If any of the following commands is issued to the reference axis, an operation error (M01 1003) will occur.

- Zero point restoration command (The axis will move up to the intermediate point.)
- Skip command
- Tool exchange position return

(2) If any of the following commands is issued to the superimposed axis, an operation error (M01 1003) will occur.

- Zero point restoration command (The axis will move up to the intermediate point.)
- Skip command
- Machine coordinate system selection command
- Workpiece coordinate system selection command
- Tool exchange position return
- Rotation center error compensation (Compensation for angle deviation)

(3) If any of the following commands is issued to the related axis of arbitrary axis superimposition, an operation error will occur.

| Command | Operation error |
|---|---|
| Control axis superimposition | Operation error (M01 1004) |
| Auxiliary axis synchronization | |
| High-speed machining mode | |
| Synchronous control | Operation error (M01 1036) |
| Control axis synchronization between part systems | Operation error (M01 1037) |

(4) If any of the following commands is executed in the part system in which the related axis of arbitrary axis superimposition exists, the program error (P29) will occur.

- High-speed machining mode II
- High-speed high-accuracy control I
- High-speed high-accuracy control II

### Axes that cannot be specified as the related axis of arbitrary axis superimposition

(1) If an axis of the part system, for which either of the following functions is being executed, is specified as the related axis of arbitrary axis superimposition, these functions will be canceled temporarily, and the control axis superimposition will be enabled.
When the control axis superimposition ends, these functions will resume.

- High-speed machining control
- High-accuracy control
- High-speed high-accuracy control I, II

(2) If an axis, for which any of the following functions are being executed, is specified as the related axis of arbitrary axis superimposition, an operation error (M01 1004) will occur.

- Master axis or slave axis of synchronous control
- Reference axis or synchronized axis of control axis synchronization between part systems
- Reference axis, 1st superimposed axis or 2nd superimposed axis of 3 axes tandem superimposition
- Reference axis or superimposed axis of arbitrary axis superimposition command
- Reference axis or synchronized axis being synchronized with auxiliary axis
- Milling interpolation
- Fixed cycle mode
- Mirror image for facing tool posts
- Mirror image by external input
- Mirror image by parameter setting
- Axis with servo OFF in spindle position control
- Axis of the part system not in automatic operation

(3) If any of the following axes is specified as the related axis of arbitrary axis superimposition, a program error (P520) will occur.

- Superimposed axis in arbitrary axis superimposition control
- The arbitrary axis superimposition command is executed to two axes being controlled in the same part system, by setting them as the reference axis and the superimposed axis.
- Basis axis of inclined axis control/selection axis of inclined axis control
  (Regardless of the "Inclined axis control valid" signal (YC35), the axis whose parameter "#2071 s_axis" (Inclined axis selection) is not "0")
- Axis in selection part system for acceleration/deceleration before interpolation
  (An axis in the part system whose parameter "#1205 G0bdcc" (Acceleration/deceleration before G0 interpolation) is not "0")
- Axis in the part system in which rotation center error compensation is valid

(4) If an axis of the part system, for which the following function is executed, is specified as the related axis of arbitrary axis superimposition, a program error (P34) will occur.

- Coordinate rotation by program

### Other functions

| Function name | Operation |
|---|---|
| Machine lock | When conducting a machine lock to the superimposed axis, only the commands towards the superimposed axis will be machine locked.<br>Note that, movements accompanying the movement of the reference axis will not be machine locked but the machine will move. |
| Manual arbitrary reverse run | The G156 command cannot run reversed. |
| Stroke end | Stroke end, stored stroke limit, chuck/tailstock barrier check are checked in the machine position.<br>If the stroke end, stored stroke limit, or chuck/tailstock barrier check alarm occurs to an axis of the part system containing the related axis of superimposition, the part system containing the reference axis and superimposed axis will stop. |
| Stored stroke limit | |
| Chuck Barrier/Tailstock Barrier check | |
| Graphic check | Start or cancel of superimposition by the superimposition command is invalid.<br>The graphic trace in the superimposition may draw a path different from the machining program path. |
| Program restart | Start or cancel of superimposition by the superimposition command is invalid.<br>Do not use restart search function to commands in the superimposition because the restart position cannot be guaranteed depending on the superimposition movement amount. |

| Function name | Operation |
|---|---|
| Servo OFF | The superimposition will be canceled if a "Servo OFF" signal is entered to the superimposed axis/reference axis in the control axis superimposition.<br>Make sure that the superimposed axis/reference axis is stopped before entering a "Servo OFF" signal.<br>To confirm the axis stop, check if "Axis movement +" signal and "Axis movement -" signal are turned OFF. |
| Interlock | When conducting an interlock to the superimposed axis, only the commands towards the superimposed axis will be interlocked.<br>Movements accompanying the movement of the reference axis will not be interlocked. |
| Arbitrary axis exchange control | Commands can be issued to the related axis of superimposition.<br>If an axis, which has been set as the uncontrolled axis through the arbitrary axis exchange, becomes the superimposed axis of the superimposition, an axis in a part system having uncontrolled axis will be used to check for axis stop at the start/end of superimposition.<br>In addition, an axis in a part system, which contains an axis being moved to the start or end position of superimposition, cannot be exchanged as an arbitrary axis. If arbitrary axis exchange is commanded, an operation error (M01 1101) will occur. |
| Synchronous tapping cycle | When the synchronous tapping is performed with the superimposed axis, set the following values to the gain for the synchronous tapping and the normal gain.<br>•#2203 SV003(PGN) = #2017 tap_g (#2249 SV049(PGN1sp))<br>•#2204 SV004(PGN2) = #2250 SV050(PGN2sp)<br>•#2257 SV057(SHGC) = #2258 SV058(SHGCsp) |
| High-speed synchronous tapping | When the high-speed synchronous tapping is performed with the superimposed axis, an in-position check is performed at R point as in-position check cannot be canceled for traveling from the initial point to R point because of the data communication specification between NC and the drive unit. |
| Deceleration check | Even if the servo in-position standby condition is applied by the deceleration check function, during the superimposition control, movement of the superimposed axis will be completed when the smoothing reached zero, and execution of the next block will start.<br>Movement of the superimposed axis will be completed when the machine is put into the standby state for smoothing of superimposition component to reach zero.<br> 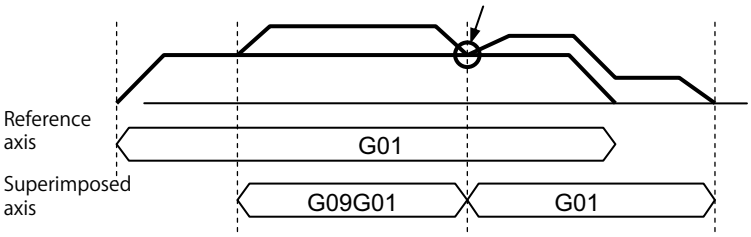 <br> |
| NC reset (Reset 1, reset 2 and reset & rewind) | When the system is reset during the superimposition, select whether to cancel the superimposition by the parameter "#1280 ext16/bit3".<br>The rapid traverse rate, cutting feedrate clamp speed, and time constant will return to the values set in the parameters after the superimposition is canceled due to the reset.<br>Apply the reset to all part systems which are related to the superimposition at a time. |
| Emergency stop | When the emergency stop occurs during the superimposition, the superimposition will be canceled.<br>The rapid traverse rate, cutting feedrate clamp speed, and time constant will return to the values set in the parameters after the superimposition is canceled due to the emergency stop. |
| Rotation center error compensation | •During superimposition, the rotation center error compensation amount of the reference axis is applied to the superimposed axis.<br>•Perform the rotation center error compensation for the reference axis. When the rotation center error compensation is performed for the superimposed axis, only the superimposed axis is compensated for. Therefore, the relative positional relationship between the reference axis and the superimposed axis may be broken.<br>•If the rotation center error compensation is commanded to both the reference axis and the superimposed axis, an operation error (M01 1003) will occur. To cancel the alarm, turn the "Rotation center error compensation enabled" signal (RCEE) OFF.<br>•When this function is combined with another one, the operation varies depending on the MTB specifications (parameter "#1450 5axis_Spec/bit5"). For details, refer to "19.3 Rotation Center Error Compensation (Precautions for Creating a Machining Program)". |

## Precautions and restrictions

(1) Designate the superimposed axis/reference axis using the name set in the parameter "#1022 axname2".
A program error (P520) will occur if a name that is not set in the parameter is designated.
The axis name specified in G156 needs to be 2 digits.
(Parameter "#1022 axname2" setting depends on the MTB specifications.)

(2) The arbitrary axis superimposition start command can be issued from a part system that contains a superimposed axis or reference axis.
Otherwise, the operation error (M01 1103) will occur.

(3) A program error (P520) will occur if a rotary axis is selected for either the reference axis or the superimposed axis.

(4) If the local coordinate system shift command or the counter preset command is issued to the superimposed axis that is under arbitrary axis superimposition control, the preset amount is valid during arbitrary axis superimposition control. However, it does not affect the workpiece coordinate system before arbitrary axis superimposition control start is commanded, which is to be returned when the arbitrary axis superimposition control end command is issued.

(5) If multiple arbitrary axis superimposition commands are issued simultaneously from different part systems, priority is given to the command for which movement is to be started first. After the movement to the start or end position of arbitrary axis superimposition is complete, the other command will be executed.

(6) The arbitrary axis superimposition end command can be issued from a part system which is controlling the superimposed axis.
If the command is issued from another part system to the superimposed axis, an operation error (M01 1103) will occur.

(7) The relative polarity of the control axis depends on the MTB specifications (parameter "#2143 polar").
Any axis can be set as the reference axis in the polarity setting.
When the parameter "#2143 polar" of Z1 axis is set to "0" (+) and the parameter "#2143 polar" of Z2 is set to "1" (-), control axes Z1 and Z2 are as follows.

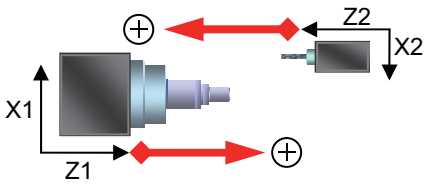


(8) The time constants of G00 and G01, of each axis during the superimposition control, depend on the MTB specifications (parameter "#2092 plG0tL", "#2093 plG0t1", "#2094 plG1tL", "#2095 plG1t1").
If the parameter setting value is "0" or outside the setting range, the MCP alarm (Y51 0022 or Y51 0023) will occur.

(9) An axis in a part system, which contains an axis being moved to the start or end position of superimposition, cannot be exchanged as an arbitrary axis. If arbitrary axis exchange is commanded, an operation error (M01 1101) will occur.

(10) Issue the arbitrary axis superimposition end command to the superimposed axis. The arbitrary axis superimposition end command issued to an axis other than the superimposed axis is ignored.

# 16.5 Control Axis Synchronization between Part Systems ; G125

## Function and purpose

This function enables an arbitrary control axis in the other part system to move in synchronization with the movement command assigned to an arbitrary control axis.
The direction in which the axis is to move synchronously can also be reversed.

The following example indicates the machining to synchronize Z2 axis to Z1 axis in the 1st part system (X1, Z1) and 2nd part system (Z2).
(Z1 is used as the reference axis, and Z2 as the synchronized axis.)

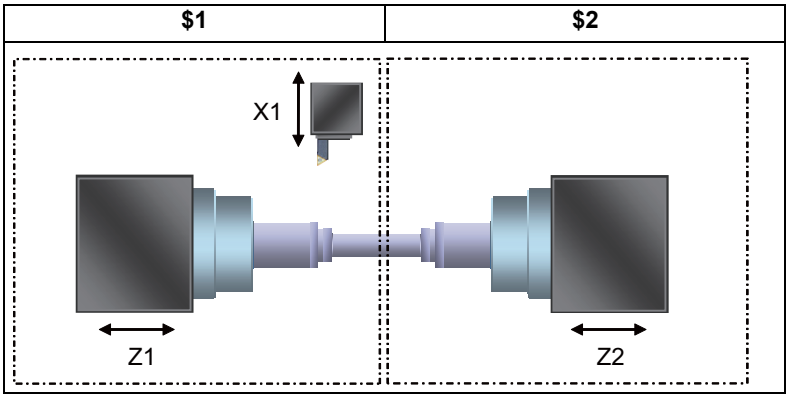


While the synchronization, synchronized axis synchronizes and moves in accordance with the reference axis regardless of conducting automatic operation or manual operation.

There are two types of control axis synchronization between part systems depending on the command method: Control axis synchronization between part systems I (by G command) and control axis synchronization between part systems II (by PLC signal). The method to be selected depends on the MTB specifications (parameter "#1280 ext16/bit5").
This manual describes the control axis synchronization between part systems I (by G command).

### Term

The following describes the meanings of the terms used in this manual.

| Word | Meaning |
|---|---|
| Reference axis | Reference axis in control axis synchronization between part systems (This axis moves only by its own axis command.) |
| Synchronization axis | Axis that moves synchronously with the reference axis in control axis synchronization between part systems (This axis moves with a command from the reference axis.) |
| Axes related to control axis synchronization between part systems | Reference axis and synchronized axis for control axis synchronization between part systems |

### Enabling conditions of the function

(1) This function can be used in multi-part systems of two or more part systems.

## Command format

### Synchronization start

**G125 Synchronized axis name = Reference axis name ;**

| | |
|---|---|
| Synchronized axis name | Synchronized axis name (Axis name set in the parameter "#1022 axname2") |
| Reference axis name | Reference axis name (Axis name set in the parameter "#1022 axname2) |

### Synchronization end

**G125 Synchronized axis name ;**

| | |
|---|---|
| Synchronized axis name | Synchronized axis name (Axis name set in the parameter "#1022 axname2") |

## Detailed description

This example describes a case to synchronize the Z2 axis with the Z1 axis.

| | |
|---|---|
| Synchronization start | (1) Waits until all the axes stop in the part systems including the Z1 axis and the part systems including the Z2 axis.<br>(2) Starts the 2-axis synchronization control using the Z1 axis as the reference axis and the Z2 axis as the synchronized axis. |
| Operation during synchronization | As the reference axis moves, the workpiece coordinate and machine coordinate of the synchronized axis move. |
| At execution of synchronization end | (1) Waits until all the axes stop in the part systems including the Z1 axis and the part systems including the Z2 axis.<br>(2) Ends the synchronization control. |

### Synchronous direction

The synchronous direction is determined by the command and parameter.

[Designation with command]

In synchronization start command, if a code "-" is added to the beginning of the reference axis name, the synchronous direction will be reversed.

[Designation with parameter]

Follow the setting of the parameter "#2087 syncnt". (The setting depends on the MTB specifications.)

0: Moves in the same direction as the reference axis.

1: Moves in the opposite direction from the reference axis.

| #2087 syncnt | "-" sign | |
|---|---|---|
| | Yes | None |
| 0 | Moves in the opposite direction from the reference axis. | Moves in the same direction as the reference axis. |
| 1 | Moves in the same direction as the reference axis. | Moves in the opposite direction from the reference axis. |

### Rapid traverse rate and cutting feedrate clamp speed of the reference axis and synchronized axis

The synchronized axis moves with the speed commanded of the reference axis; therefore, the same parameter setting value must be designated for the rapid traverse rate and cutting feedrate clamp speed of the reference axis and synchronized axis.

### Time constant of the reference axis and synchronized axis

To match the acceleration/deceleration between the reference axis and the synchronized axis, the same time constant parameter setting value must be designated for the reference axis and the synchronized axis.

### Synchronization deviation detection

The synchronization deviation is detected during the control axis synchronization between part systems.

The deviation of the synchronized axis feedback value against the reference axis feedback value is calculated as the synchronization deviation amount.

The synchronization deviation amount is output to R register (R5076 to R5107) which correspond to each synchronized axis.

If the synchronization deviation amount exceeds the value of parameter "#2024 synerr", an operation error (M01 0051) occurs. Cancel the control axis synchronization between part systems of the error axis to clear the error. However, when the parameter "#2024 synerr" is set to "0", the range of the synchronization deviation amount will not be checked.

## Program example

### When commanding from the part system containing the reference axis

| $1 | | | $2 | |
|---|---|---|---|---|
| **Program** | **Operation** | | **Program** | **Operation** |
| :<br>N10 !L1;<br>N11 G125 Z2=Z1;<br><br>N12 !L2; | <br>(a)<br>Starts synchronizing the Z2 axis with the Z1 axis.<br>(a) | <br>---<br><br>--- | :<br>N20 !L1;<br>:<br><br>N21 !L2; | <br>(a)<br><br><br>(a) |
| N13 G01 Z50.F100;<br>N14 X4. Z4.;<br>: | Synchronizes between the Z1 axis (reference axis) and Z2 axis (synchronized axis). | | :<br>:<br>: | No movement command is issued to the Z2 axis (synchronized axis). |
| N15 !L3;<br>N16 G125 Z2;<br><br>N17 !L4;<br>: | (a)<br>Cancels the synchronization between the Z1 axis and Z2 axis.<br>(a) | ---<br><br><br>--- | N24 !L3;<br>:<br><br>N25 !L4;<br>: | (a)<br><br><br>(a) |

(a) Timing synchronization operation

**When commanding from the part system containing the synchronized axis**

| $1 | | | $2 | |
|---|---|---|---|---|
| **Program** | **Operation** | | **Program** | **Operation** |
| :<br>N10 !L1;<br>:<br>N12 !L2; | <br>(a)<br><br>(a) | ---<br>--- | :<br>N20 !L1;<br>N21 G125 Z2=Z1;<br>N21 !L2; | <br>(a)<br>Starts synchronizing the Z2 axis with the Z1 axis.<br>(a) |
| N13 G01 Z50.F100;<br>N14 X4. Z4.;<br>: | Synchronizes between the Z1 axis (reference axis) and Z2 axis (synchronized axis). | | :<br>:<br>: | No movement command is issued to the Z2 axis (synchronized axis). |
| N15 !L3;<br>:<br>N17 !L4;<br>: | (a)<br><br>(a) | ---<br>--- | N24 !L3;<br>N25 G125 Z2;<br>N26 !L4;<br>: | (a)<br>Cancels the synchronization between the Z1 axis and Z2 axis.<br>(a) |

(a) Timing synchronization operation

**When commanding from a part system containing neither the synchronized axis nor reference axis**

| $1 | | | $2 | | | $3 | |
|---|---|---|---|---|---|---|---|
| **Program** | **Operation** | | **Program** | **Operation** | | **Program** | **Operation** |
| :<br>N10 !2!3L1;<br>:<br>N11 !2!3L2; | <br>(a)<br><br>(a) | ---<br>--- | :<br>N20 !1!3L1;<br>:<br>N21 !1!3L2; | <br>(a)<br><br>(a) | ---<br>--- | :<br>N30 !1!2L1;<br>N31 G125 Z2=Z1;<br>N32 !1!2L2; | <br>(a)<br>Starts synchronizing the Z2 axis with the Z1 axis.<br>(a) |
| N12 G01 Z50. F100;<br>N13 X4.Z4.;<br>: | Synchronizes between the Z1 axis (reference axis) and Z2 axis (synchronized axis). | | :<br>:<br>: | No movement command is issued to the Z2 axis (synchronized axis). | | :<br>:<br>: | |
| N14 !2!3L3;<br>:<br>N15 !2!3L4;<br>: | (a)<br><br>(a) | ---<br>--- | N24 !1!3L3;<br>:<br>N25 !1!3L4;<br>: | (a)<br><br>(a) | ---<br>--- | N35 !1!2L3;<br>N36 G125 Z2;<br>N37 !1!2L4;<br>: | (a)<br>Cancels the synchronization between the Z1 axis and Z2 axis.<br>(a) |

(a) Timing synchronization operation

## Relationship with other functions

### Functions that are not available during control axis synchronization between part systems

(1) An operation error (M01 1038) occurs in the following cases.

(a) The following commands are issued to the synchronized axis.
These commands can be issued to the reference axis.

- Compound type fixed cycle (when the movement command is issued to the synchronized axis in the compound type fixed cycle)
- Mirror image
- Linear interpolation, circular interpolation (Rapid traverse rate, Cutting feedrate)
- Milling interpolation
- Thread cutting
- Synchronous tap
- Corner chamfering/Corner R
  (The same processing is also performed when the synchronized-axis movement command is issued in the block following corner chamfering or corner rounding.)
- Tool length / wear compensation
- Nose R compensation
- Machine coordinate system command
- Workpiece coordinate system selection
- Local coordinate system setting
- External workpiece coordinate offset
- Coordinate system setting
- Reference position check
- Manual operation
- Manual / Automatic simultaneous
- Automatic operation handle interruption
- Fixed cycle for drilling
- Fixed cycle for turning machining
- Rotation center error compensation (compensation for the angular deviation)

(b) The following commands are issued to the axes related to synchronization between part systems.

- Return to tool exchange position
- Skip function
- Torque skip function
- Collision detection function

(2) In the following cases, a program error occurs.

(a) The following commands are issued to part systems containing the reference axis.

- Simple tool center point control: (P941)

(b) The following commands are issued to part systems containing the synchronized axis.

- Simple inclined surface machining: (P952)
- Inclined surface machining: (P952)
- Simple tool center point control: (P941)

### Axes that cannot be designated as the axis related to the control axis synchronization between part systems

(1) An operation error (M01 1037) occurs in the following cases.

(a) Any of the following axes is designated as the synchronized axis.

- Reference axis in control axis synchronization between part systems mode

(b) Any of the following axes is designated as the axis related to the control axis synchronization between part systems.

- Slave axis in synchronization control mode
- Reference axis and superimposed axis in control axis superimposition mode
- Reference axis and superimposed axis in arbitrary axis superimposition mode
- Synchronized axis in control axis synchronization between part systems mode
- Reference axis and synchronized axis being synchronized with auxiliary axis
- Axis with servo OFF in spindle position control
- Axis with no zero point established

(c) An axis in a part system in which the following functions are being executed is designated as the axis related to the control axis synchronization between part systems. (*1)

(*1) A program error (P521) occurs in synchronization between part systems I, and an operation error (M01 1037) occurs in synchronization between part systems II.

- Axis targeted for G00 acceleration/deceleration before interpolation
  (Axis in a part system for which the parameter "#1205 G0bdcc" is not set to "0")
- Rotation center error compensation

(d) An axis in a part system where any of the following functions is being executed is designated as the reference axis.

- Simple tool center point control

(e) An axis in a part system where any of the following functions is being executed is designated as the synchronized axis.

- Simple inclined surface machining
- Inclined surface machining
- Simple tool center point control

### Other functions

| Function name | Operation |
|---|---|
| Thread cutting | Commands can be issued to the reference axis for control axis synchronization between part systems.<br>If the feedrate exceeds the clamp speed of the reference axis or synchronized axis, an operation error (M01 0107) occurs, and thread cutting will not start. |
| Reference position return | When the reference position return is commanded to the reference axis, the synchronized axis only synchronizes with the reference axis movement and moves, and the reference position return is not carried out. |
| Stroke end | These functions are checked at the machine position.<br>When an alarm occurs in an axis in a part system containing the axis related to the control axis synchronization between part systems while these functions are being executed, the part systems containing the reference axis or synchronized axis stop. |
| Stored stroke limit | |
| Chuck Barrier/Tailstock Barrier check | |
| Graphic check | Start or cancel of the synchronization by the G125 command is invalid. |
| Program restart | |
| Arbitrary axis exchange control | Commands can be issued to the axis related to the control axis synchronization between part systems.<br>If an uncontrolled axis is set as the axis related to the control axis synchronization between part systems by the arbitrary axis exchange function, an axis in a part system containing the uncontrolled axis will be checked about whether or not the axis stops at the start or end of synchronization. |
| Manual arbitrary reverse run | The G125 command cannot run reversed. |

| Function name | Operation |
|---|---|
| Inclined axis control | Operation is different between the reference axis and inclined axis for inclined axis control.<br>Whether or not the target is the reference axis or inclined axis for inclined axis control is determined by the setting value of the parameter "#2071 s_axis" regardless of "Inclined axis control valid" signal (YC35).<br>[Reference axis for inclined axis control]<br>The control axis synchronization between part systems can be commanded to the reference axis for inclined axis control ("#2071 s_axis" = 2). However, the movement command cannot be issued to the inclined axis. If the movement command is issued to the inclined axis, an operation error (M01 0005) occurs.<br>[Inclined axis for inclined axis control]<br>When the control axis synchronization between part systems is commanded to the inclined axis for inclined axis control ("#2071 s_axis" = 1), operation is different between control axis synchronization between part systems I and control axis synchronization between part systems II.<br>•Control axis synchronization between part systems I<br>A program error (P521) occurs.<br>•Control axis synchronization between part systems II<br>An operation error (M01 1037) occurs. |
| Machine lock | When the reference axis is in automatic machine lock or manual machine lock, the synchronized axis is also in machine lock. |
| Servo OFF | When the state of the reference axis is servo OFF, that of the synchronized axis is also servo OFF.<br>When "#1064 svof" is set to "1" (error correction), do not turn the axes servo OFF during synchronization. If they are servo OFF, the synchronous relationship between the reference axis and synchronized axis cannot be maintained by the error correction operation. |
| NC reset<br>(Reset 1/2, Reset & rewind) | When a reset is applied during control axis synchronization between part systems, select whether to cancel the control axis synchronization between part systems using the parameter "#1280 ext16/bit3".<br>Apply the reset to all part systems which are related to the synchronization at a time. |
| Emergency stop | When the emergency stop occurs during the control axis synchronization between part systems, the control axis synchronization between part systems will be canceled. |
| High-speed machining mode II<br>High-speed High-accuracy control I/II | The control axis synchronization between part systems can be combined with high-speed machining mode II or high-speed high-accuracy control I/II.<br>When the high accuracy parameter is different between part systems, the synchronized axis moves as follows.<br>•Even if the parameters "#1206 G1bF", "#1207 G1btL", and "#1568 SfiltG1" are different between part systems, the synchronized axis moves synchronously with the reference axis.<br>•For the parameters "#1570 Sfilt2" and "#2010 fwd_g", the value set to the synchronized axis is valid. |

| Function name | Operation |
|---|---|
| Rotation center error compensation | ♦While the control axis synchronization between part systems is being executed, rotation center error compensation amount of the reference axis is applied to the synchronized axis.<br>♦Execute the rotation center error compensation to the reference axis. When the rotation center error compensation is executed to the synchronized axis, relative positional relation between the reference axis and the synchronized axis may collapsed because the compensation is applied only to the synchronized axis.<br>♦When the rotation center error compensation is commanded to both the reference axis and synchronized axis, the operation error (M01 1038) occurs. The alarm can be canceled by turning OFF the "Rotation center error compensation enabled" signal (RCEE).<br>♦The operation when the both functions are used together depends on the MTB specifications (parameter "#1450 5axis_Spec/bit5"). Refer to "19.3 Rotation Center Error Compensation (Precautions for Creating a Machining Program)" for details. |
| Constant-gradient acceleration/deceleration in manual feed | To match the acceleration/deceleration between the reference axis and the synchronized axis, the same setting value of the parameter "#2703 manual_acc" (Enable constant-gradient acceleration/deceleration in manual feed) must be designated for the reference axis and the synchronized axis. If the jog feed is commanded to the reference axis when the setting value is different between the axes, the operation alarm (M01 1036) occurs. |

## Precautions

### Common to control axis synchronization between part systems I and II

(1) The number of combinations is not limited unless the reference axis is duplicated with the synchronized axis.

(2) When the control axis synchronization between part systems are started/canceled, the related two part systems wait for the completion of the currently executing block, and the synchronization starts/cancels after all the axes reached "smoothing zero" in both part systems.

(3) As the state of two target part systems affects the control axis synchronization between part systems, be aware of the timing between the part systems.
Therefore, command the timing synchronization operation before or after commanding the synchronization start/cancel.

(4) Do not change the related parameters during the control axis synchronization between part systems.

(5) The target control axis at the start of the control axis synchronization between part systems should be in a state where the reference position return after power ON is complete or the absolute position is established.

### Precautions for control axis synchronization between part systems I

(1) If G125 is commanded where control axis synchronization between part systems II is selected (*1), a program error (P610) occurs.

(*1) This setting depends on the MTB specifications (parameter "#1280 ext16/bit5"= 0).

(2) G125 can be commanded from any part system.

(3) The synchronization start/end command can also be issued from a part system which does not contain the axis (reference axis or synchronized axis) related to the control axis synchronization between part systems.

(4) If an axis other than synchronized axis is specified at the synchronization end command, that command will be ignored.

(5) When only the G125 command is issued, it is ignored.

(6) G125 must be commanded alone in a block.
A program error (P33) occurs if it is not commanded alone in a block.

(7) When designating the "reference axis name" and "synchronized axis name" in the G125 command, command the names specified in the parameter "#1022 axname2".
If an unspecified name is commanded, a program error (P521) occurs.

(8) If the same axis name is given to the reference axis and the synchronized axis, a program error (P521) occurs.

(9) Two axes in the same part system cannot be commanded as a reference axis and synchronized axis.
If this type of command is given, a program error (P521) occurs.

# 16.6 Multi-part System Simultaneous Thread Cutting Cycle

### Function and purpose

Multi-part system simultaneous thread cutting allows multiple part systems to perform thread cutting simultaneously on one spindle.
Multi-part system simultaneous thread cutting has two commands; the command (G76.1) for simultaneously cutting threads in multiple places, which is known as "multi-part system simultaneous thread cutting cycle I", and the command (G76.2) for simultaneously cutting a thread by two part systems, which is known as "two-part system simultaneous thread cutting cycle II".
Chamfering is available for multi-part system simultaneous thread cutting cycle I and two-part system simultaneous thread cutting cycle II. Refer to "13.1.2 Thread Cutting Cycle; G78" for details on chamfering.

## 16.6.1 Multi-part System Simultaneous Thread Cutting Parameter Setting Command ; G76

### Command format

```
G76 Pmra QΔdmin Rd ;
```

| Address | | Meaning |
|---|---|---|
| P | m | Number of cutting passes for finishing<br>Reversible parameter "#8058 G76 TIMES" is also available for setting. |
| | r | Chamfering amount<br>Reversible parameter "#8014 CDZ-VALE (L system only)" is also available for setting.<br>This sets the chamfering width based on thread lead l across a range from 0.0 to 9.9 with a 2-digit integer with the decimal point omitted. (00 to 99) |
| | a | Tool nose angle (thread angle)<br>Reversible parameter "#8059 G76 ANGLE" is also available for setting.<br>This selects the angle from 0° to 99° and commands the value with two digits. |
| Q | Δdmin | Minimum cut amount<br>If the calculated cut amount is smaller than Δdmin, it is clamped by Δdmin. (When omitted, operations differ depending on #1222/bit4 setting.) |
| R | d | Finishing allowance<br>Reversible parameter "#8057 G76 LAST-D" is also available for setting. |

Parameters for thread cutting are set with this command.
Command in the block immediately before G76.1/G76.2 is commanded.

**Note**

(1) A reversible parameter enables to use parameter setting value without issuing a program command and also, the value can be changed by the program command.

### Detailed description

(1) The data is set in machining parameters m: #8058, r: #8014, a: #8059 and d: #8057 for each part system.
(2) Issue the command for each part system.
(3) The parameter setting command can be omitted depending on the MTB specifications (parameter "#1222 aux06/bit5").
(4) If the parameter setting command is omitted, the parameter setting values are used from #8014, #8057, #8058, #8059 settings. The minimum cut-in amount (Δdmin) follows the #1222/bit4 setting.
(5) When "#1265 ext01/bit0" is "1", MITSUBISHI CNC special format will be applied. Therefore, program error (P33) will occur when the parameter setting commands. (The parameter setting depends on the MTB specifications.)

## 16.6.2 Multi-part System Simultaneous Thread Cutting Cycle I ; G76.1

### Command format

| |
|---|
| **G76.1 X/U__ Z/W__ R__ P__ Q__ J__ F__ ;** |

| | |
|---|---|
| X/U | X-axis end point coordinates of thread section (absolute or incremental position) |
| Z/W | Z-axis end point coordinates of thread section (absolute or incremental position) |
| R | Taper height component (radius value) for thread<br>A straight thread is created when "0" is set. |
| P | Thread height (positive radius value) |
| Q | 1st cut amount (positive radius value) |
| J | Part system for simultaneous thread cutting (an integer that has 8 digits or less) (*1) (*2) (*3) (*4) (*5) |
| F | Thread lead |

(*1) Using an integer that has 8 digits or less, command the numbers of the part systems on which simultaneous thread cutting is executed. (The part system where the command was issued can be omitted.)

| | |
|---|---|
| Ones digit | Part system number for the 1st set |
| Tens digit | Part system number for the 2nd set |
| :<br>Ten-millions digit: | :<br>Part system number for the 8th set |

(Example 1) To execute a thread cutting cycle on the 1st and 3rd part systems, command "J13" or "J31".

(Example 2) To execute a thread cutting cycle on the 1st, 3rd, and 4th part systems, command "J134", "J413", or "J341".

(*2) If the J address is omitted, the part system where G76.1 has been commanded or the part system that has been set in the parameter "#19419 Timing sync system" is determined as the part system on which the thread cutting cycle will be simultaneously executed.

(*3) If the number of the part system where G76.1 has not been commanded is commanded, a timing synchronization status is established at the beginning of G76.1, and the thread cutting cycle will not be started.

(*4) If a part system that does not exist is commanded, a part system to be used in sub part system II is commanded, or the value set as a part system number is "0" or less, a program error (P35) will occur.

(*5) If the same part system is commanded more than once, a program error (P33) will occur.

### Detailed description

(1) When G76.1 is issued by multiple part systems, waiting is done until the G76.1 command is issued to another part system. The thread cutting cycle starts when the commands are aligned properly.
(Example 1) When the J address is omitted (parameter "#19419 Timing sync system" = 0)

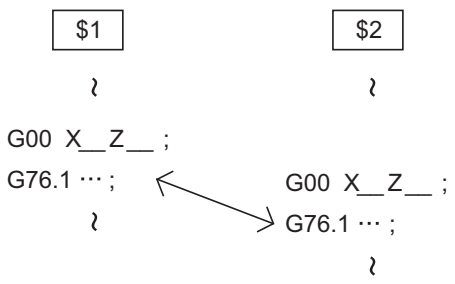

Thread cutting will start simultaneously after waiting for the 1st and 2nd part systems.

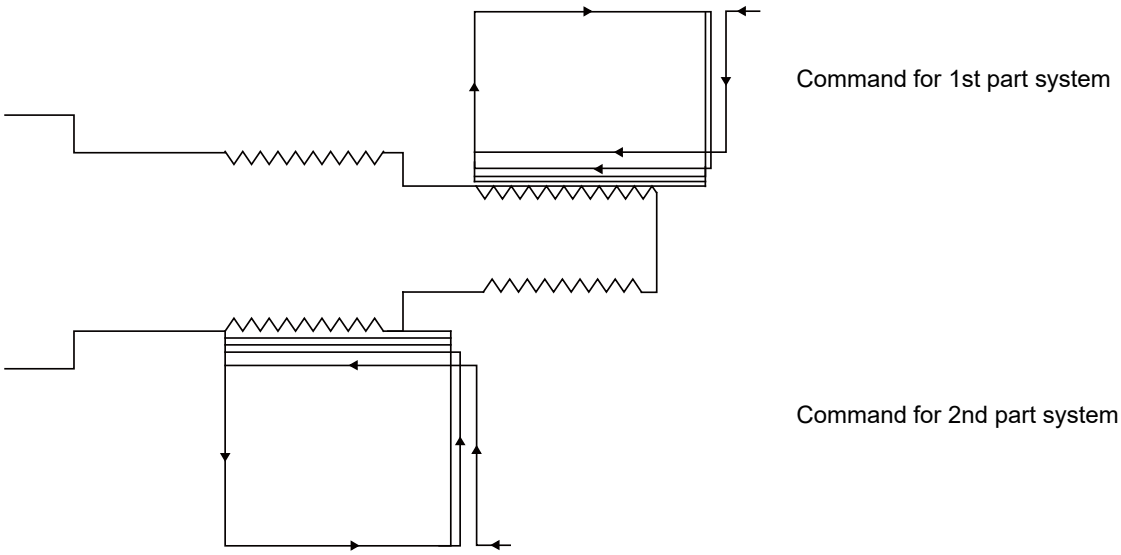


(Example 2) When "J134" is commanded for the 1st part system ($1), the 3rd part system ($3), and the 4th part system ($4)

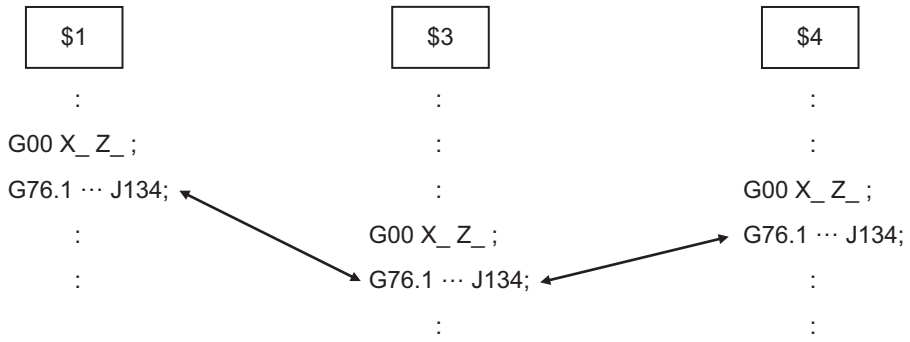


Thread cutting will start simultaneously after waiting for the 1st, 3rd, and 4th part systems.

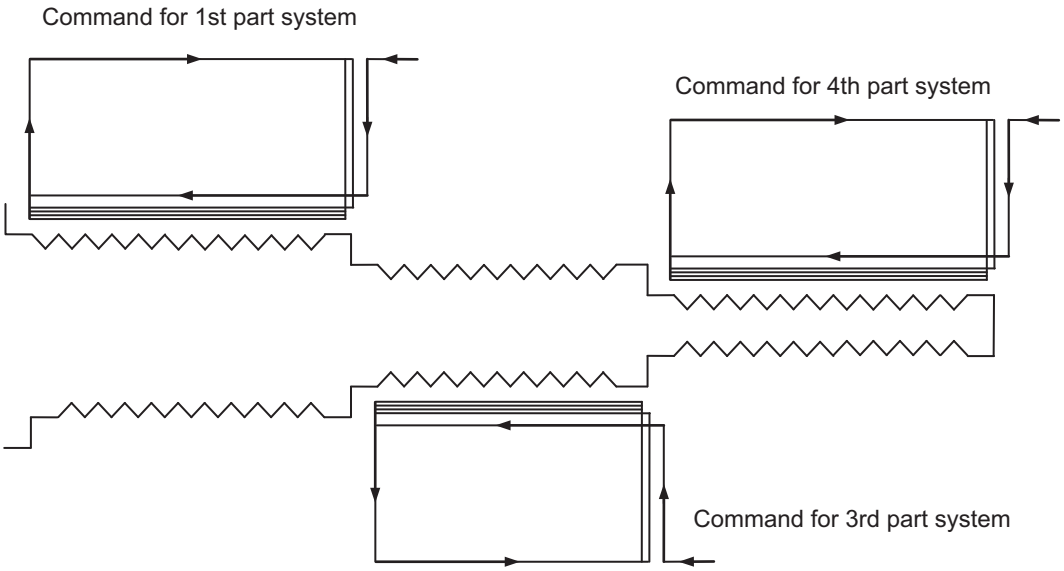

(2) In a multi-part system simultaneous thread cutting cycle, waiting is done at the start and end of the thread cutting process.
However, in multi-part system simultaneous thread cutting cycle I (G76.1), waiting in one cycle can be disabled depending on the MTB specifications (parameter "#1242 set14/bit0").

(3) The same precautions for thread cutting command (G33), thread cutting cycle (G78) and compound thread cutting cycle (G76) apply to this cycle.

(4) As the threads are cut in multiple places by the G76.1 command, the various commands do not need to be the same. Each of them can be issued independently.

(5) When G76.2 and G76.1 are commanded
The part systems, in which each are commanded, will carry out the G76.1 and G76.2 movements. However, the part system in which G76.2 is commanded will assume that the other part system is using G76.2 when cutting the threads, so the thread grooves will not be guaranteed.

(6) This function is unmodal. So it needs to be commanded each time.

(7) G code group 1 modal (G00, G01, G02, G03, G02.3, G03.3 etc.) is canceled temporarily during multi-part system simultaneous thread cutting.

(8) Thread cutting start shift angle is not available in G76.1. A program error (P32) will occur if commanded.

## 16.6.3 Two-part System Simultaneous Thread Cutting Cycle II ; G76.2

**Command format**

```
G76.2 X/U__ Z/W__ R__ P__ Q__ Aa F__ ;
```

(1) Thread cutting start shift angle

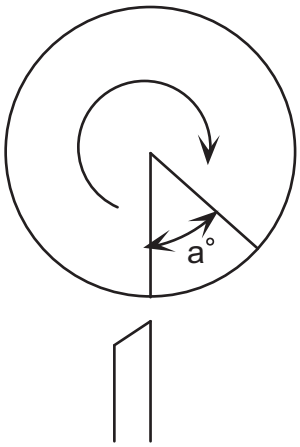


The thread cutting command starts movement after waiting for the spindle encoder's one rotation synchronization signal. However, the start point can be delayed by a degree amount.

a : Thread cutting start angle

The meanings of the addresses other than A and J are the same as the multi-part system simultaneous thread cutting cycle I (G76.1).

## Detailed description

(1) When G76.2 is issued by 1st part system and 2nd part system, waiting is done until the command is issued to another part system. The thread cutting cycle starts when the commands are aligned properly.

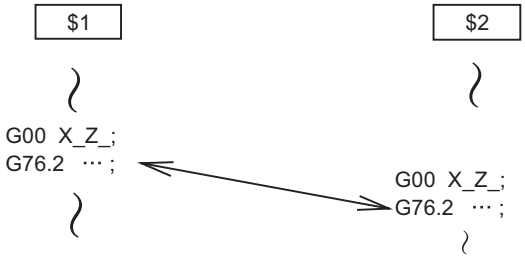


(2) G76.2 assumes the same thread cutting, and deeply cuts in with the cutting amount using 1st part system and 2nd part system alternately.

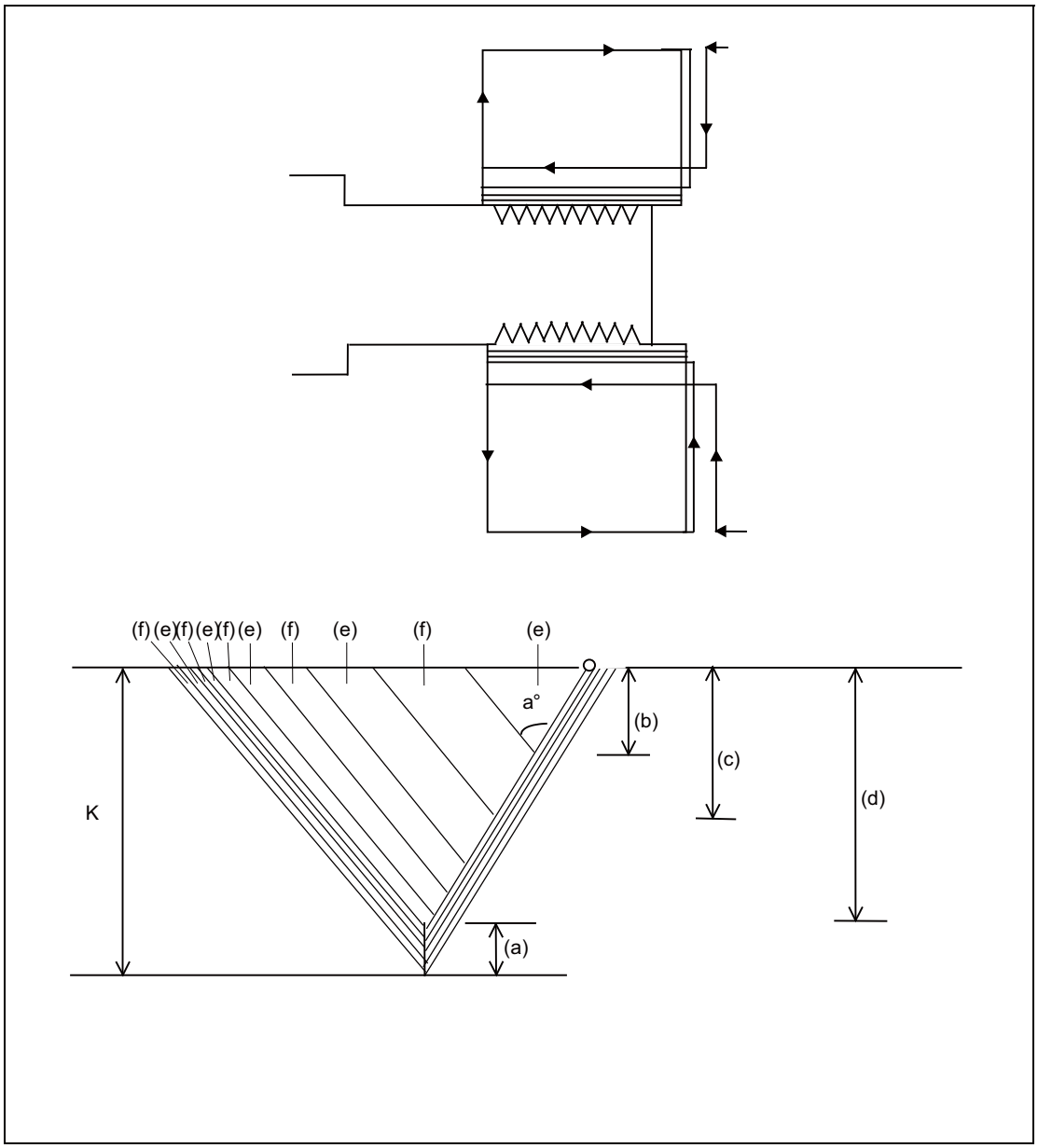


(a) Finishing allowance d
(b) Δd
(c) Δd ×√ 2
(d) Δd ×√ n
(e) Cutting with 1st part system
(f) Cutting with 2nd part system

(3) In one cycle, waiting is done at the start and end of the thread cutting.

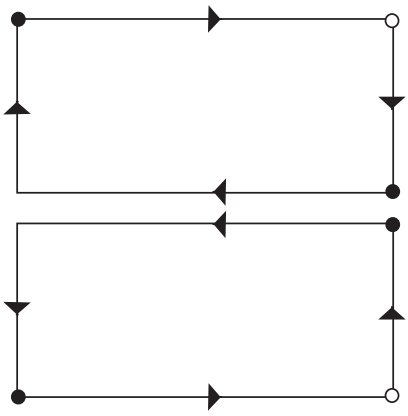

● Timing synchronization operation

(4) The same precautions for thread cutting command (G33), thread cutting cycle (G78) and compound thread cutting cycle (G76) apply to this cycle.

(5) G76.2 cuts the same thread, so the various parameters, thread section, taper height, screw thread height, cutting amount and thread lead must be commanded to the same values for the two part systems.
Note that the start shift angle can be commanded to match the thread cutting state.

(6) Thread cutting controls the Z axis position while tracking the spindle encoder rotation. Thus, the relative relation of the spindle position detected by the spindle encoder and the Z axis will change with the following elements.
(a) Z axis feedrate (spindle rotation speed * screw pitch)
(b) Cutting feed acceleration/deceleration time constant
(c) Position loop gain
Thus, with G76.2 which is same thread cutting, the parameters must be set so that the conditions are the same for the 1st and 2nd part systems.

(7) Thread cutting start shift angle command

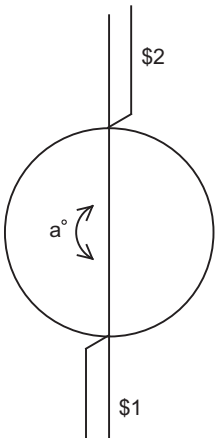


As shown on the left, if the 1st and 2nd part system blades oppose at 180 degrees, the 1st and 2nd part systems thread cutting start shift angle difference is set to 180 degrees.

(Example)

| 1st part system ($1) | 2nd part system ($2) |
|---|---|
| : | : |
| G76.2 X_ Z_ A0.; | G76.2 X_ Z_ A180.; |
| : | : |

(8) When G76.2 and G76.1 are commanded
The part systems, in which each are commanded, will carry out the G76.1 and G76.2 movements. However, the part system in which G76.2 is commanded will assume that the other part system is using G76.2 when cutting the threads, so the thread grooves will not be guaranteed.

(9) This function is unmodal. So it needs to be commanded each time.

(10) G group 1 modal (G00, G01, G02, G03, G02.3, G03.3 etc.) is canceled temporarily during two-part system simultaneous thread cutting.

(11) Reset simultaneously for 1st part system and 2nd part system during two-part system simultaneous thread cutting cycle II (G76.2).
If reset is individually executed for each part system, the part system is not in automatic operation. Thus, the other part system keeps moving according to the setting of "#1279 ext15/bit0".

# 16.7 Multi-part System Simultaneous Thread Cutting Cycle (MITSUBISHI CNC Special Format) ; G76.1, G76.2

## Function and purpose

Multi-part system simultaneous thread cutting allows different part systems to perform thread cutting simultaneously on one spindle.
Multi-part system simultaneous thread cutting has two commands; the command (G76.1) for simultaneously cutting threads in multiple places, which is known as "multi-part system simultaneous thread cutting cycle I", and the command (G76.2) for simultaneously cutting a thread by two part systems, which is known as "two-part system simultaneous thread cutting cycle II".
When using the MITSUBISHI CNC special format ("#1265 ext01/bit0" is "1"), some addresses differ from the normal format. This section gives details on the formats different from the normal ones.
Refer to section "16.6 Multi-part System Simultaneous Thread Cutting Cycle" for details on the multi-part system simultaneous thread cutting cycle.

## Command format

```
G76.1 X/U__ Z/W__ I__ K__ D__ J__ F__ A__ ;
```

```
G76.2 X/U__ Z/W__ I__ K__ D__ Q__ F__ A__ ;
```

| | |
|---|---|
| X/U | X-axis end point coordinates of thread section<br>The X-axis coordinates of the end point at the thread section are commanded with absolute or incremental position. |
| Z/W | Z-axis end point coordinates of thread section<br>The Z-axis coordinates of the end point at the thread section are commanded with absolute or incremental position. |
| I | Taper height component (radius value) at thread section<br>A straight thread is created when I0 = 0. |
| K | Thread height<br>This thread height is commanded with a positive radius value. |
| D | Cut amount<br>The cut amount for the first cutting pass is commanded with a positive radius value. |
| J | Part system for simultaneous thread cutting (an integer that has 8 digits or less)<br>(*1)(*2)(*3)(*4)(*5) |
| Q | Thread cutting start shift angle |
| F | Thread lead |
| A | Tool nose angle (thread angle) |

(*1) Using an integer that has 8 digits or less, command the numbers of the part systems on which simultaneous thread cutting is executed. (The part system where the command was issued can be omitted.)

| | |
|---|---|
| Ones digit | Part system number for the 1st set |
| Tens digit | Part system number for the 2nd set |
| :<br>Ten-millions digit: | :<br>Part system number for the 8th set |

(Example 1) To execute a thread cutting cycle on the 1st and 3rd part systems, command "J13" or "J31".

(Example 2) To execute a thread cutting cycle on the 1st, 3rd, and 4th part systems, command "J134", "J413", or "J341".

(*2) If the J address is omitted, the part system where G76.1 has been commanded or the part system that has been set in the parameter "#19419 Timing sync system" is determined as the part system on which the thread cutting cycle will be simultaneously executed.

(*3) If the number of the part system where G76.1 has not been commanded is commanded, a timing synchronization status is established at the beginning of G76.1, and the thread cutting cycle will not be started.

(*4) If a part system that does not exist is commanded, a part system to be used in sub part system II is commanded, or the value set as a part system number is "0" or less, a program error (P35) will occur.

(*5) If the same part system is commanded more than once, a program error (P33) will occur.

**Note**

(1) This is 1 block command. It is not necessary to command "G76P__Q__R__" immediately before.

## Detailed description

Comparison of normal format and MITSUBISHI CNC special format

| Normal format | MITSUBISHI CNC Special format | Remarks |
|---|---|---|
| (1) G76 Pmra Q_ R_;<br>(2) G76.1 X_ Z_ R_ P_ Q_ J_ F_;<br>(2) G76.2 X_ Z_ R_ P_ Q_ A_ F_; | <br>G76.1 X_ Z_ I_ K_ D_ J_ F_ A_;<br>G76.2 X_ Z_ I_ K_ D_ F_ A_ Q_; | Command format |
| (2) X/U | X/U | X-axis end point coordinates of thread section |
| (2) Z/W | Z/W | Z-axis end point coordinates of thread section |
| (2) R | I | Taper height component at thread section |
| (2) P | K | Thread height |
| (2) Q | D | Cut amount |
| (2) J | J | Part system for simultaneous thread cutting |
| (2) A | Q | Thread cutting start shift angle |
| (2) F | F | Thread lead |
| (1) Q [When omitted: #1222/bit4] | None ["0" fixed] | Minimum cut amount |
| (1) Pa [Reversible parameter #8059] | A [Reversible parameter #8059] | Tool nose angle (thread angle) |
| (1) Pm [Reversible parameter #8058] | Parameter #8058 | Number of cutting passes for finishing |
| (1) Pr [Reversible parameter #8014] | Parameter #8014 | Chamfering amount |
| (1) R [Reversible parameter #8057] | Parameter #8057 | Finishing allowance |

**Note**

(1) A reversible parameter enables to use parameter setting value without issuing a program command and also, the value can be changed by the program command.

## Relationship with Other Functions

The modal must be set as shown below when commanding G76.1/G76.2.

| Function | G code |
|---|---|
| Cylindrical interpolation cancel | G07.1 |
| Polar coordinate interpolation cancel | G13.1 |
| Balance cut OFF | G14 |
| Tool nose radius compensation cancel | G40 |
| Mirror image by parameter setting | Cancel |
| Mirror image by external input | Cancel |
| Polygon machining mode cancel | G50.2 |
| Constant surface speed control mode cancel | G97 |

## Precautions

(1) The switch of MITSUBISHI CNC special format and normal format depends on the MTB specifications (parameter "#1265/bit0").

(2) When the MITSUBISHI CNC special format is selected, it is not necessary to command G76P__R__immediately before commanding G76.1/G76.2. A program error (P33) will occur if G76 P__ R__ or a normal format is commanded.

# 16.8 Synchronization between Part Systems

## 16.8.1 Dwell/Miscellaneous Function Time Override

### Function and purpose

Override can be applied to dwell time and miscellaneous function finish wait time of all part systems. The synchronization between part systems can be maintained when the multiple machining programs are operated with override in the multiaxis and multi-part system mixed control CNC.
If a machining program that performs cutting-off machining in the 2nd part system ($2) after the completion of turning machining in the 1st part system ($1) is executed with override, the 1st and 2nd part systems will be out of synchronization and the machining may not be operated properly.
The validity of this function depends on the MTB specifications. Refer to your CNC specifications for details (parameter "#1436 mstsyn").

The differences on the start timing for each command are shown in (1) to (3) when executing the machining with the 1st part system ($1) and 2nd part system ($2) as shown in the figure below

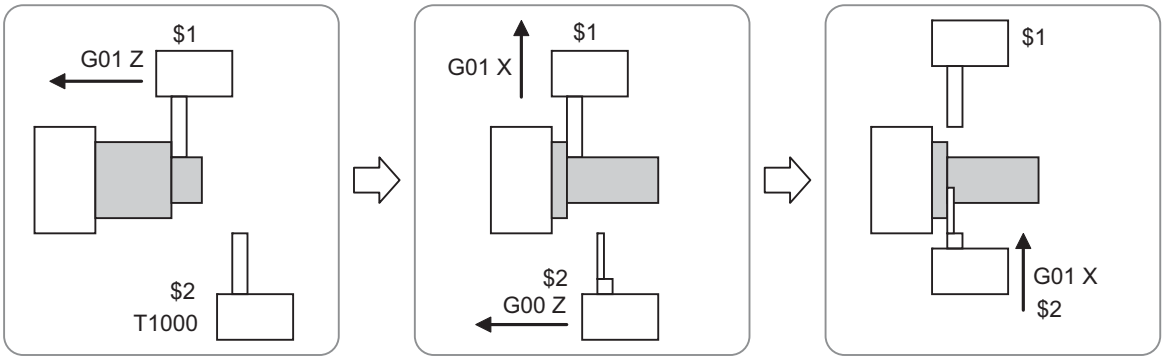


$1: Turning machining
$2: Tool exchange
(T1000)

$1: Turning machining
$2: Tool positioning

$1: Standby
$2: Cutting-off machining

(1) Override 100%

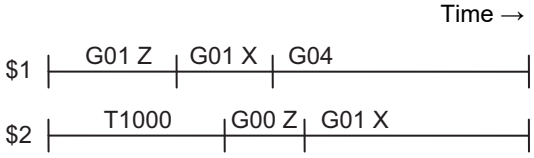


(2) Override 50% when this function is invalid

Only feed time doubled in the operation with override 50%.
Part systems are out of synchronization and the cutting-off machining starts during turning machining.

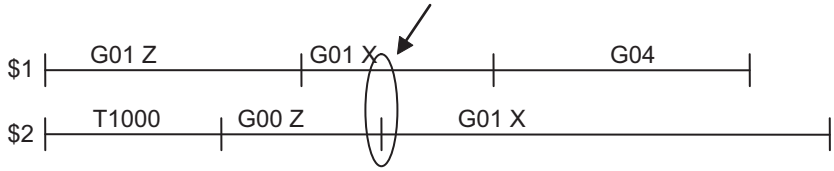

(3) Override 50% when this function is valid

Feed time, dwell time and miscellaneous function finish wait time double in the operation with override 50%.
The synchronization between part systems are maintained and the cutting-off machining stars after the completion of the turning machining.

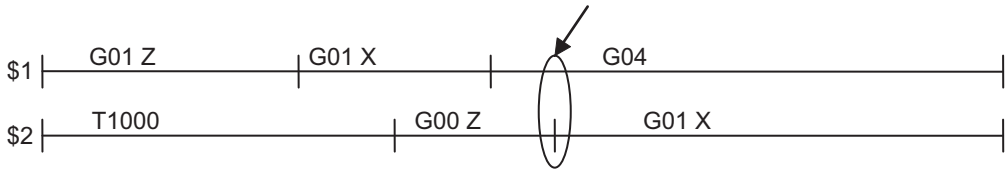


## Detailed description

### Dwell override

Override can be applied to dwell time.

Dwell execution time = Dwell command time x (100/override value%)

(Example) Dwell time when override is applied to G04 X10.;

| Override | Dwell time |
|---|---|
| 100% | 10.0 s |
| 75% | 13.3 s |
| 50% | 20.0 s |
| 25% | 40.0 s |

### Miscellaneous function time override

Apply override to miscellaneous function finish wait time to delay the start of the next block.

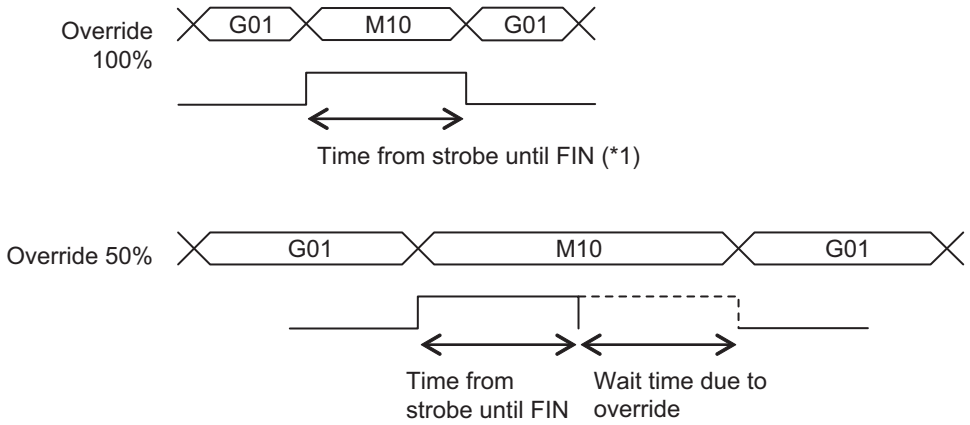


$$\text{Wait time due to override} = \text{Time from strobe until FIN} \times \frac{100}{\text{Override value}} - \text{Time from strobe until FIN}$$

(*1) Time from turning on of any of MF1 to 4, SF1 to 8, TF1 to 4 and BF1 to 4 signals until rising edge of FIN1 or falling edge of FIN2

## Relationship with Other Functions

### Dwell (revolution-based designation)

This function is invalid for the dwell (revolution-based designation) command.

### M code output during axis traveling

This function is also valid for the miscellaneous functions output by the M code output while axis is moving.

### Miscellaneous functions multiple codes in 1 block

This function is valid if multiple miscellaneous functions are issued in one block. Override is applied to the time from when any strobe signal is turned on until the FIN signal.

### Miscellaneous function lock

Miscellaneous functions are not output in the miscellaneous function lock state. This function is invalid.

### Manual numerical value command

Override is not applied to the miscellaneous function time with the manual numerical value command. This function is invalid.

### Synchronization between part systems OFF

This function can be disabled by the synchronization between part systems OFF function.
This function depends on the MTB specifications.

### Program check operation

Override is set to 100% when the actual cutting mode is selected during the program check operation. This function is invalid.

### Tapping cycle command

Override is cancelled during the tapping cycle. Therefore, override will not be applied to the hole bottom dwell function or miscellaneous function output (forward and reverse tool rotation). This function is invalid.

## Precautions

(1) When operating the machine by applying override, set the cutting feed override and the rapid traverse override to the same rate on all part systems. Otherwise, part systems will be out of synchronization with one another.

(2) Setting the cutting feed override exceeding 100% will not shorten the miscellaneous function time. Moreover, part systems will be out of synchronization with one another. To maintain synchronization between part systems, the cutting feed override must be set to 100% or less.

(3) If the machine is operated by applying override, while a command to cancel override, such as tapping cycle and thread cutting, is issued, part systems will be out of synchronization with one another. To maintain synchronization between part systems, command the timing synchronization operation between part systems after a command to cancel override is issued.

(4) If cutting feed override is set to 0%, the dwell time and the miscellaneous function command will not be completed. If cutting feed override is set to 0% or more, the machine will wait for the wait time that is determined according to the cutting feed override value before starting the next block.

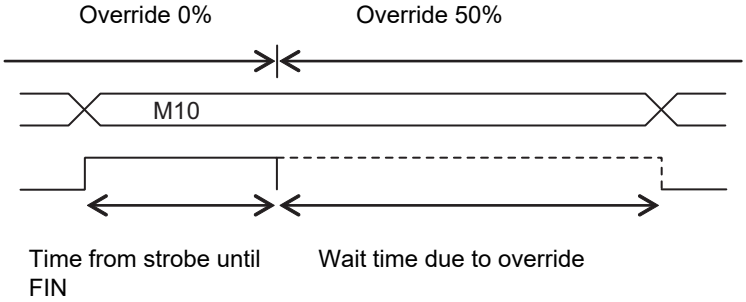


(5) If the automatic operation stops during the wait time due to override, the time period of automatic operation pause will not be included in the wait time. After the machine has been restarted, the machine will wait for the remaining wait time due to override, before starting the next block.

(Example) If the wait time due to override is set to 10.0 s, and the automatic operation stops after a lapse of 6.0 s, after the machine has been restarted, the machine will wait for 4.0 s before starting the next block.

## 16.8.2 Synchronization between Part Systems OFF

### Function and purpose

To cancel synchronization with other part systems by single block operation with part systems synchronized, this function disables synchronization between part systems in a part of the machining program.
This function is mainly effective at blocking the automatic operation pause in only some part systems when the sub part system control II function is being used. This function is useful when loader control and ATC control, which are operated independently of machining, are performed with a sub program or sub part system control. (This function enables an operation with synchronization between part systems in machining part systems and an independent operation in sub part systems.)
Valid/invalid of this function can be switched with the system variable (#3003) or the PLC signal (based on the MTB specifications.)
The following explains the method to switch ON/OFF with the system variable.

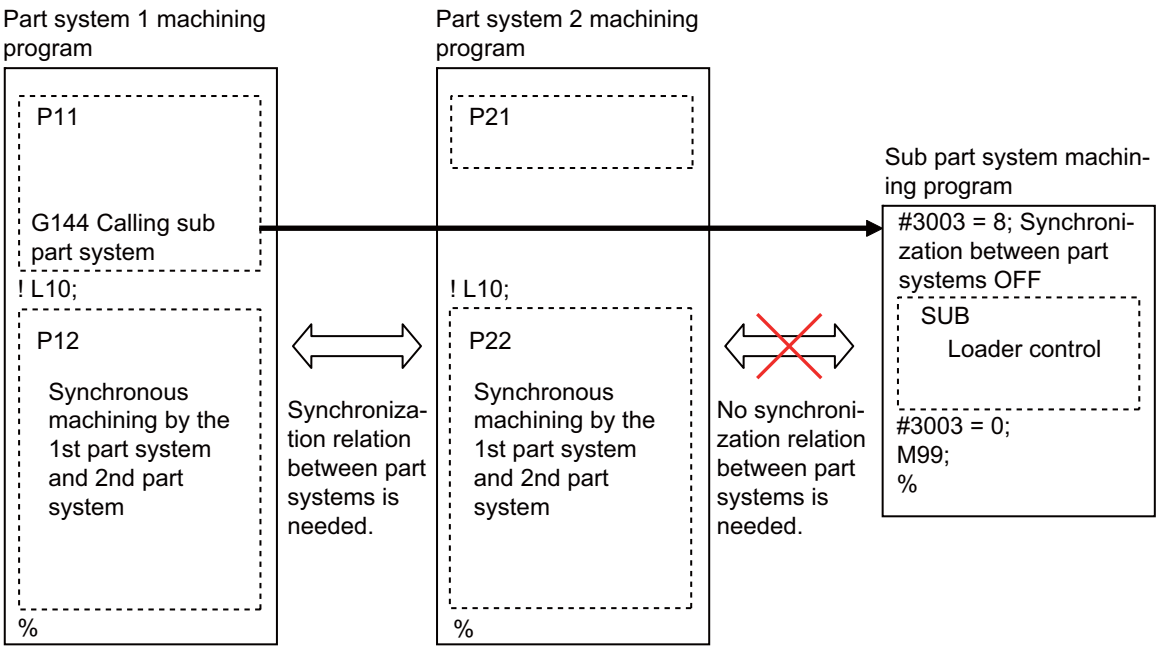


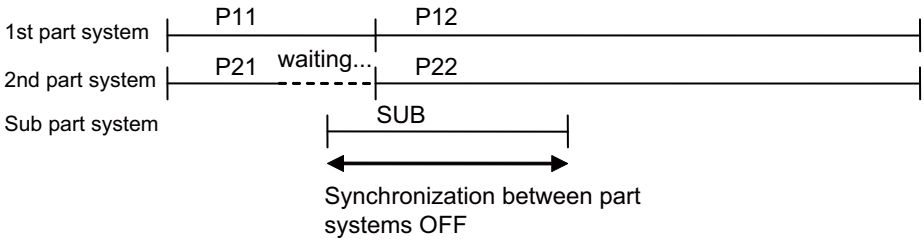


The behaviors with synchronization between part systems OFF is as follows

| | |
|---|---|
| Single block function between part systems: | ♦The pause is not caused by other part systems.<br>♦The other part systems do not pause with block stop. |
| Dwell/miscellaneous function time override: | ♦Override is invalid. |

## Detailed description

By substituting a value in the system variable #3003, the validity of each function can be selected.
Refer to the system variable list for details of each system variable.
Select Synchronization between part systems OFF in the system variable #3003/bit3.

### Note

(1) Variable No. #3003 is set to zero by reset.

#### #3003/bit3: Synchronization between part systems OFF

The part system with "#3003/bit3" set to ON is not affected by the synchronization between part systems. At this time, the part systems, excluding that with "#3003/bit3" set to ON, are synchronized.

| Synchronization between part systems | Part system with "#3003/bit3" set to ON | Part system with "#3003/bit3" set to OFF |
|---|---|---|
| Single block between part systems | Single block between part systems OFF<br>When a part system has been stopped by single block stop, automatic operation will not stop in other part systems.<br>When another part system has been stopped by single block stop, automatic operation will not stop in this part system. | Single block between part systems ON (*1)<br>The Single block between part systems is valid between the part systems excluding that with "#3003/bit3" set to ON. |
| Dwell/miscellaneous function time override | Dwell/miscellaneous function time override OFF<br>Override is not applied to the dwell time or miscellaneous function time. | Dwell/miscellaneous function time override ON (*2)<br>Override is applied to the dwell time and miscellaneous function time. |

(*1) The single block function between part systems must be enabled with the PLC signal.

(*2) The dwell/miscellaneous function time override function must be enabled with the parameter.

## Relationship with Other Functions

#### Sub part system control II

When calling a sub part system, the sub part system will use the signals for cutting feed override, rapid traverse override, etc. of the main part system. However, the sub part system will use the signal for synchronization between part systems OFF of its own.
When the sub part system is complete, #3003 is cleared to 0.

## Precautions

(1) If either of the system variable or PLC signal is turned ON, synchronization between part systems is invalid.

# 16.9 Sub Part System Control

## 16.9.1 Sub Part System Control I; G122

### Function and purpose

This function activates and operates any non-operating part system (sub part system) in the multi-part system. Sub part system control I can be used in the same manner as calling subprogram in a non-operating part system. An auxiliary axis machining program can be controlled in the sub part system by commanding Sub part system control I (G122) from the main part system.
In the usage example below, the tool positioning starts to the machining start point at the same time (time T1) as the start of gantry retract by using Sub part system control I (G145) in the flow from feeding the workpiece to moving to cut start position in order to reduce the cycle time.
Select whether main part system or sub part system for each part system in Sub part system control I. When using a part system as a sub part system, by setting the operation mode to "Sub part system I operation mode" with the PLC signal and commanding sub part system control I (G122) from an operating part system, it is possible to activate the part system in the sub part system I operation mode as a sub part system.

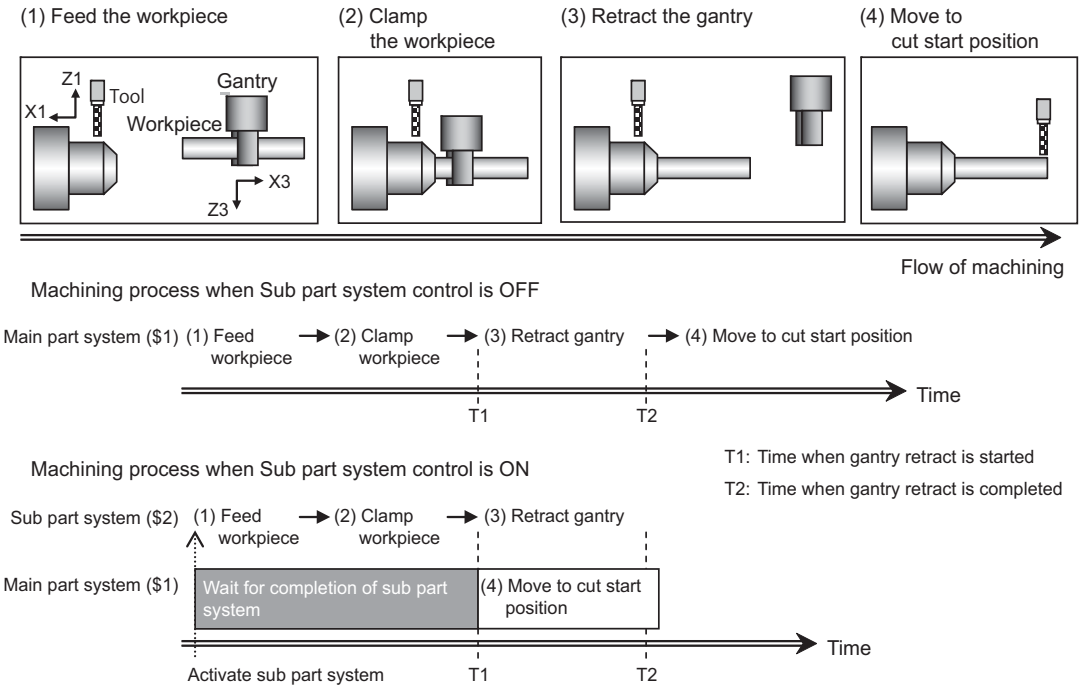


The following describes the meanings of the terms used in this chapter.

| Term | Meaning |
|---|---|
| Main part system | Indicates a part system located on the uppermost stream side of a sub part system call flow. |
| Sub part system | Indicates a part system activated by the sub part system activation command. |
| Calling part system | Indicates a part system that issued the sub part system activation command. |

The sub part system control I differs from the sub part system control II as follows.

| | |
|---|---|
| Sub part system control I: | Main part system and sub part system depend on the MTB specifications, respectively. |
| Sub part system control II: | A part system dedicated for parallel processing is activated as a sub part system. In the program operation of a sub part system, the parameters per part system and the PLC signals follow the values of the main part system. (For some of the PLC signals, the device of the sub part system will be used. When an axis is needed to be controlled in sub part system, command the arbitrary axis exchange to give sub part system authorization to control the axis. Refer to the instruction manual issued by the MTB for details.)<br>The availability of the arbitrary axis exchange function depends on the MTB specifications. Refer to your machine's specifications. |

## Enabling conditions

(1) This function can be used in multi-part systems of two or more part systems.

(2) In order to activate a sub part system using the sub part system control I command, the following conditions must be satisfied. There are enabling conditions that are only applicable to the M80 series.

[Condition 1]

This condition must be satisfied only for the M80 series/C80 series.

The number of sub part systems has been set in the base common parameter "#1483 SBS1_sys num" (the number of part systems in sub part system I).

(a) Part systems as many as the number specified in #1483, counted from the end of the valid part system (the part system for which "#1001 SYS_ON" is set to "1"), will be reserved as sub part systems.

(b) If the number of sub part systems or main part systems exceeds the maximum number defined in the system specifications, an MCP alarm (Y05 1483) will occur.

(c) (M80 series only) If the values set for "#1483 SBS1_sys num" and "#1474 SBS2_sys num" are both "1" or more, an MCP alarm (Y05 1483) will occur.

[Condition 2]

The identification No. (B command value) used to activate a sub part system has been set in the base common parameter "#12049 SBS_no" (sub part system I identification No.) for sub part systems.

(a) If an identification No. that is not set in the parameter "#12049 SBS_no" is specified when the sub part system control I command is issued, a program error (P650) (sub part system identification No. illegal) will occur.

[Condition 3]

The PLC signal SBSM (Sub part system I operation mode) of the sub part system is set to "1".

(a) In a part system operating the sub part system I operation mode, the operation mode appears as "SUB" in the part system display of the operation screen.

(b) If the sub part system control I command is issued to a part system that is not operating the sub part system I operation mode, an operation error (M01 1111) will occur. However, while the operation error (M01 1111) is occurring, the operation can be started by setting SBSM to "1".

## Command format

### Call sub part system

**G122 A__P__Q__K__D__B__H__ (argument); (For G code lists 2 to 5)**

**G122 <file name> P__Q__K__D__B__H__ (argument); (For G code lists 2 to 5)**

**G153 A__P__Q__K__D__B__H__ (argument); (For G code lists 6 and 7)**

**G153 <file name> P__Q__K__D__B__H__ (argument); (For G code lists 6 and 7)**

| | |
|---|---|
| A | Program No. (1 to 99999999 or 100010000 to 199999998) |
| <File name> | File name of the program (up to 32 characters) |
| P | Start sequence number (Head of the program if omitted.) |
| Q | End sequence number (To end (M99) of the program if omitted.) |
| K | Number of repetitions (1 to 9999) |
| D | Synchronization control (0/1) |
| B | Sub part system identification No. (1 to 7) |
| H | Sub part system reset type (0/1) |
| Argument | Argument of a sub part system local variable (Setting rage of local variable (decimal point command is valid)) |

### Complete sub part system

**M99; (command in sub part system side)**

### Cancel the standby status for completion of sub part system (command in the sub part system side when the D0 command is issued)

**G145; (For G code lists 2 to 5)**

**G155; (For G code lists 6 and 7)**

**Note**

(1) G145 is ignored in a sub part system activated in the parallel control method (D1 command).

## Detailed description

This function can be used in multi-part systems of two or more part systems.
Main part system and sub part system are switched according to the MTB specifications.

### Description of each address

| Address | Meaning | Command range (unit) | Remarks |
|---|---|---|---|
| A | Program No. | 1 to 99999999 or 100010000 to 199999998 (*1) | Program No. or file name of the machining program operating in the sub part system.<br>♦Programs in an external device cannot be designated.<br>♦If address A and <file name> are designated at the same time, precedence is given to address A.<br>♦If designation of the program is omitted, the machining program defined by the MTB will be used (parameter "#12050 SBS_pro"). |
| <File name> | File name of the program | Up to 32 characters. | |
| P | Start sequence No. | 1 to 99999999 | Sequence No. to start the machining program operating in the sub part system.<br>♦If there is no command, the operation will start from the head of the machining program. |
| Q | End sequence No. | 1 to 99999999 | Sequence No. to end the machining program operating in the sub part system.<br>♦If there is no command, the program will run up to "M99". |
| K | Number of repetitions | 1 to 9999 | The number of times to repeat the machining program for continuous operation in the sub part system.<br>♦If there is no command, the program will only run once. (No repetition) |
| D | Synchronous control | 0 / 1 | Validity of synchronous control<br>0: The next block is processed after the sub part system operation completes.<br>1: The next block is processed at the same time as the start of a sub part system operation.<br>If there is no command, it is handled in the same manner as 0 is designated. |
| B | Sub part system identification No. | 1 to 7 | Identification No. used for timing synchronization with sub part system, etc.<br>♦The sub part system to be activated is designated by an identification No. The correspondence between identification No. and part system No. depends on the MTB specifications (parameter "#12049 SBS_no").<br>♦If there is no command, it is handled in the same manner as 1 is designated. |
| H | Sub part system reset type (*2) | 0 / 1 | 0: The G command modal is maintained by the reset when a sub part system is complete.<br>1: The G command modal is initialized by the reset when a sub part system is complete.<br>♦If there is no command, it is handled in the same manner as 0 is designated. |
| (Argument) | Argument of a sub part system local variable | Setting range of local variable (Decimal point command is possible.) | ♦Argument is passed to the sub part system as a local variable (level 0).<br>However, addresses A, B, D, G, H, K, O, P, and Q cannot be used as an argument.<br>♦For the correspondence between address and variable number, refer to the following table. |

(*1) When the parameter "#1253 set25/bit0" is set to "1", the command range is "100010000 to 199999989".

(*2) If a sub part system ends by M99 or the end sequence No., resetting processing is performed automatically in the sub part system.

### Correspondence of argument designation address and variable number in sub part system

| Argument designation address | Variable number in sub part system |
|---|---|
| A | - |
| B | - |
| C | #3 |
| D | - |
| E | #8 |
| F | #9 |
| G | - |
| H | - |
| I | #4 |
| J | #5 |
| K | - |
| L | #12 |
| M | #13 |

| Argument designation address | Variable number in sub part system |
|---|---|
| N | #14 |
| O | - |
| P | - |
| Q | - |
| R | #18 |
| S | #19 |
| T | #20 |
| U | #21 |
| V | #22 |
| W | #23 |
| X | #24 |
| Y | #25 |
| Z | #26 |

**Note**

(1) Addresses can be designated in an arbitrary order.

(2) Addresses which do not need to be designated can be omitted.

(3) Local variables in a sub part system are initialized every time the sub part system is activated. Default value is <empty>.

(4) To use local variables in a sub part system, user macros must be available. For the available functions of each model, refer to the list.

### Operation mode of a sub part system

(1) The operation mode of sub part systems is used as "sub part system I operation mode". If the memory mode/MDI mode and the sub part system I operation mode are entered at the same time, the stop code (T01 0108) will be generated.

(2) In a part system operating the sub part system I operation mode, the operation mode appears as "SUB" in the part system display of the operation screen.
If an alarm or warning occurs in a sub part system, the part system No. appears as "SUB" in the alarm/warning message of the operation screen.

(3) If the sub part system control I command is issued to a part system that is not operating the sub part system I operation mode, an operation error (M01 1111) will occur.

### Activation part system of a sub part system

When issuing the sub part system control I command, designate the sub part system identification No. with command address B. (When there is no B command, it will be handled as the B1 command.) The sub part system identification No. and the sub part system No. to be called depend on the MTB specifications. (Parameter "#12049 SBS_no")

(Example 1) and (Example 2) show the operations when parameters are set as shown below.
The available number of part systems depends on your machine's specifications.

| #12049 | SBS_no | Sub part system I identification No. | $1 | $2 | $3 | $4 | $5 | $6 | $7 | $8 |
|---|---|---|---|---|---|---|---|---|---|---|
| | | | 0 | 0 | 0 | 0 | 1 | 2 | 3 | 4 |

(Example 1) If the B command is omitted, $5 corresponding to B1 will be activated.

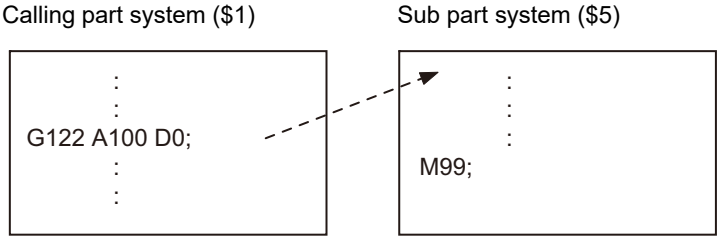


(Example 2) Sub part system identification No. (the part system No. to be activated and correspondence) can be specified with the B command.

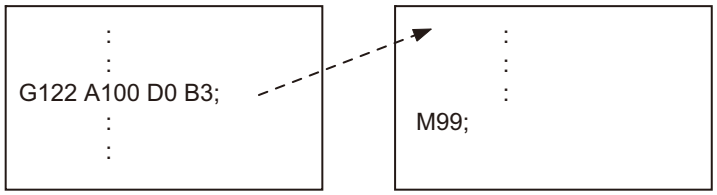

### Operation program of a sub part system

When issuing the sub part system control I command, designate the program No. or program name to be operated in the sub part system with command address A or <file name>. If designation of the program is omitted, the machining program set in parameter "#12050 SBS_pro" will be started.
If a machining program is managed for each part system, the program of the part system designated as a sub part system will be operated (*1). If a machining program is commonly managed between part systems, the designated program will be operated.

(*1) If the program of the part system No. for the sub part system is empty, the program of the 1st part system ($1) will be operated. If the program of the 1st part system is also empty, a program error (P461) will occur.

(1) If program is managed for each part system

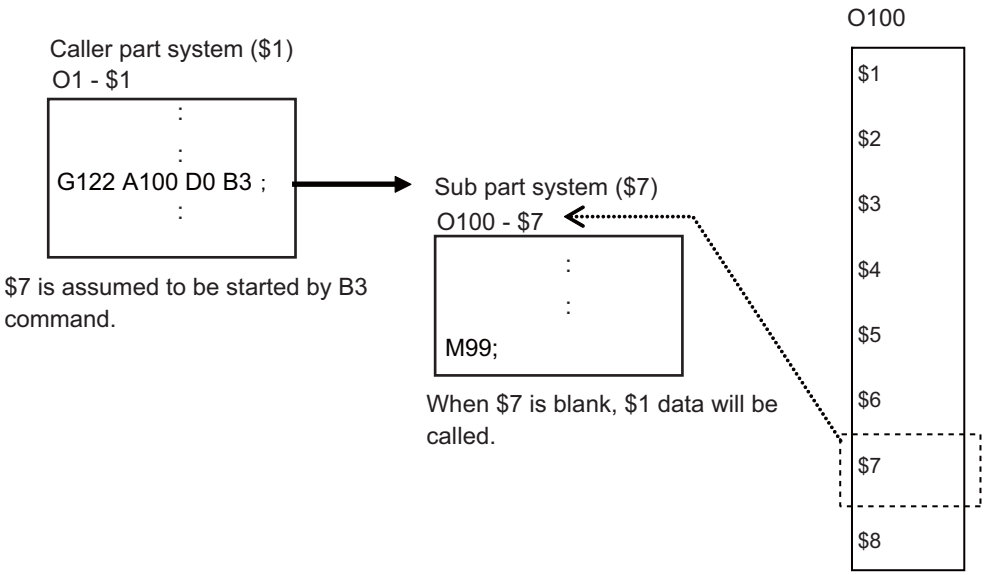


(2) If program is commonly managed between part systems

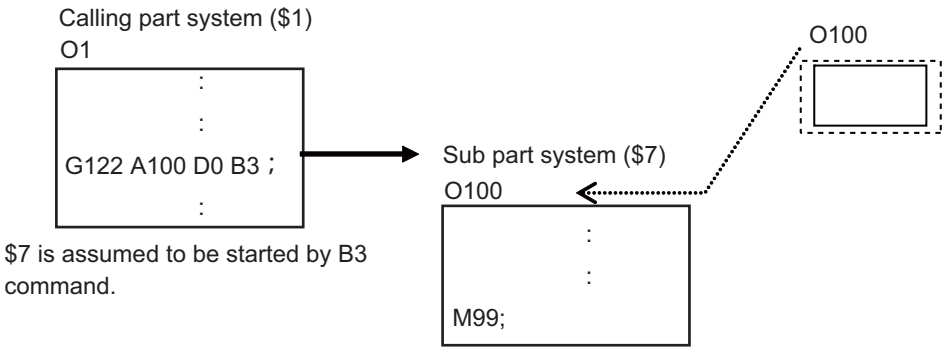

### Sub part system activation with the completion wait method (D=0)

If "0" is designated for command address D when the sub part system control I command is issued, or if command address D is omitted, the calling part system will wait for the called sub part system to complete (to M99 or the end sequence No.) before starting the next block.
Meanwhile, if the completion wait cancel command (G145) is issued in a sub part system while the calling part system is in the sub part system completion standby state, the machine will shift to a parallel processing mode.
The following shows the operation and the activation timing of each part system.

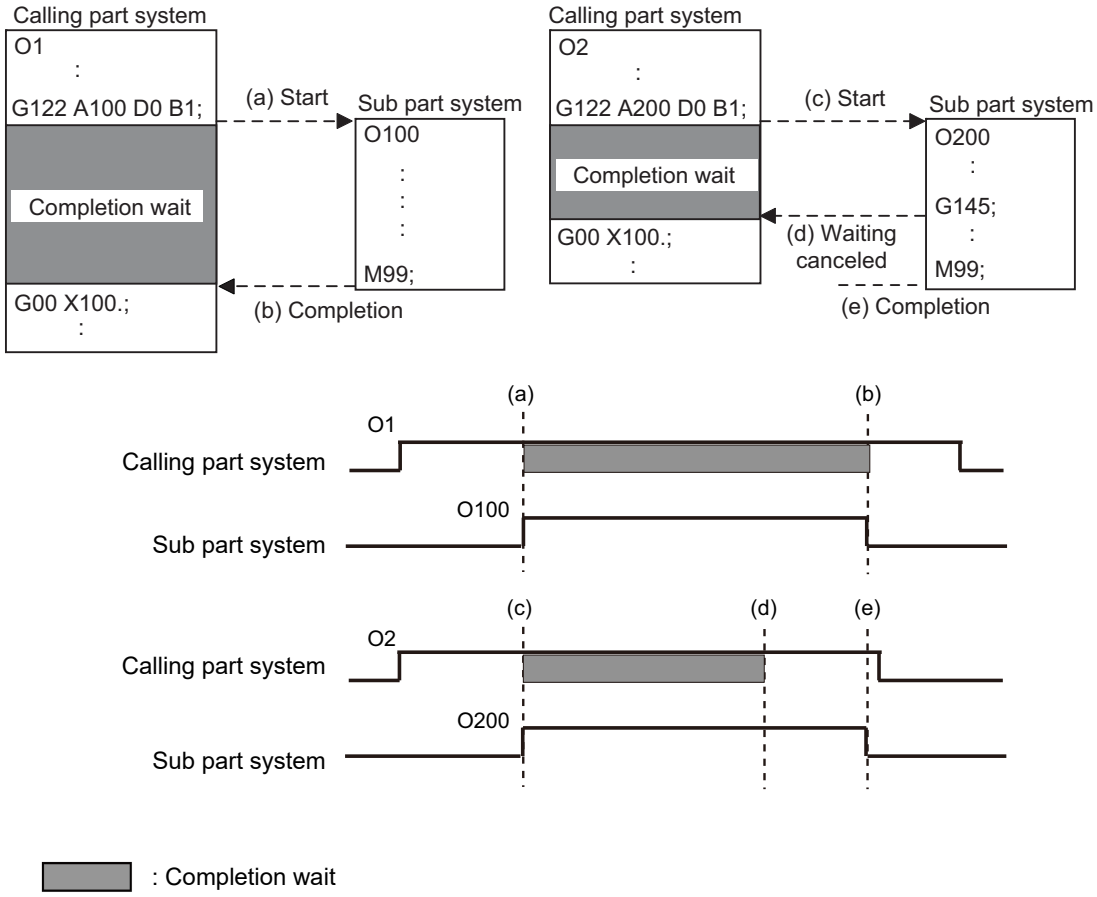

### Activation of a sub part system with parallel processing mode (D=1)

If "1" is designated for command address D when the sub part system control I command is issued, the following blocks of the calling part system and the first and the following blocks of the sub part system will be operated in parallel.
The following shows the operation and the activation timing of each part system.

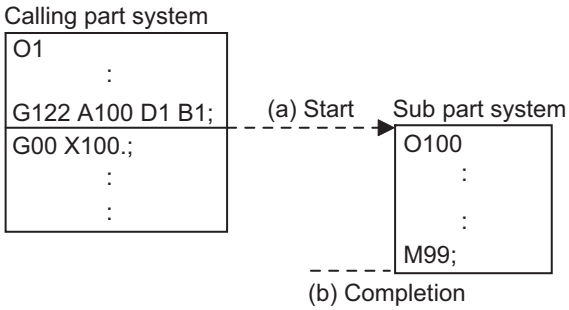


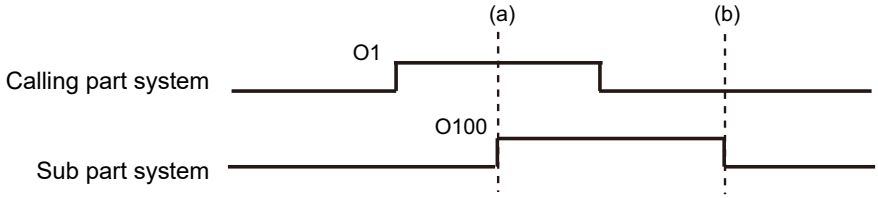


### Activation of multiple sub part systems

Multiple sub part systems can be activated in parallel during separate processes by calling from a single part system.
The number of sub part systems to be processed simultaneously depends on the model.
The following shows the operation and the activation timing of each part system.

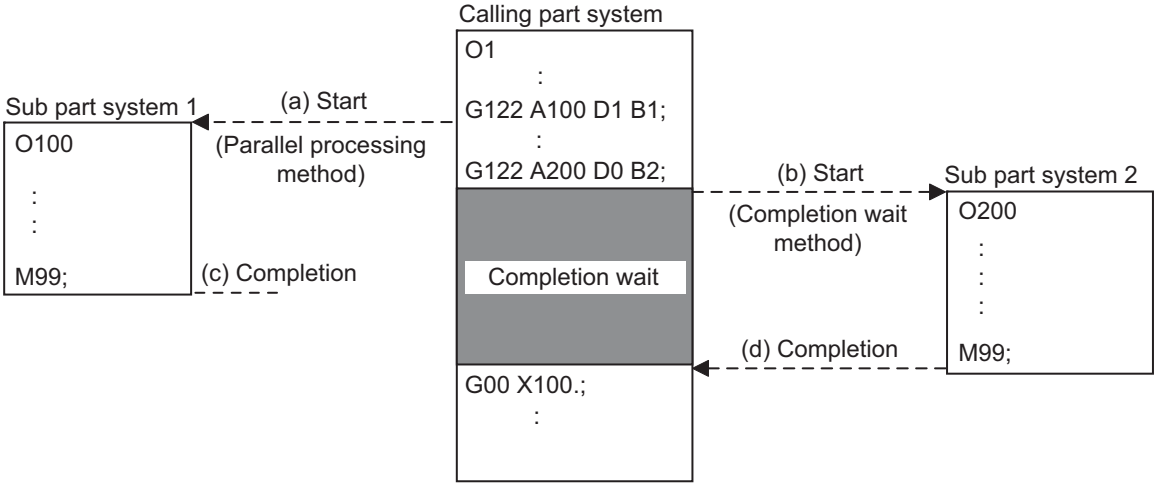


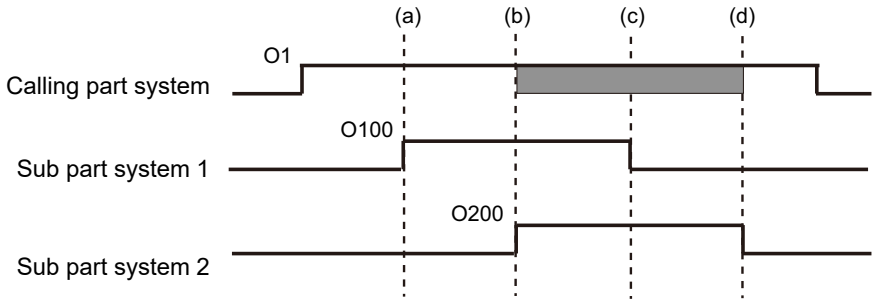


: Completion wait

### Activate a sub part system from another sub part system

A sub part system can be activated from another sub part system.
The number of sub part systems to be processed simultaneously depends on the model.
The following shows the operation and the activation timing of each part system.

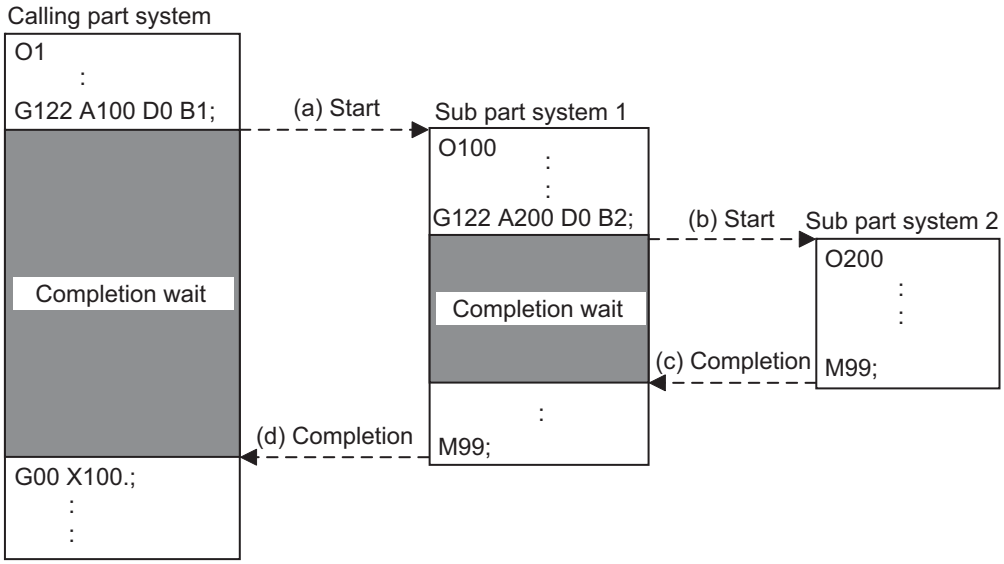


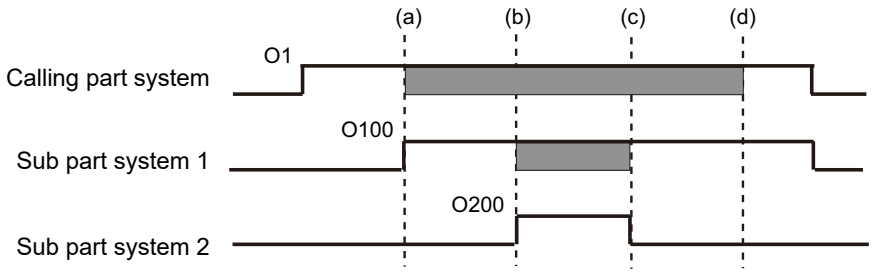


: Completion wait

### Sub part system activation command to a sub part system being activated

If G122 is commanded while a sub part system is being activated, using the same identification No. (B command), the machine will wait for the earlier sub part system to complete activation, before activating the next sub part system.

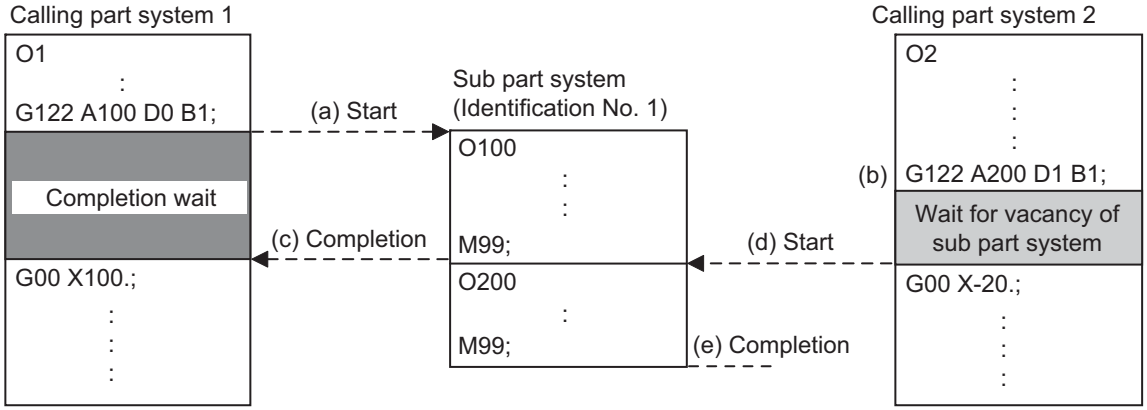


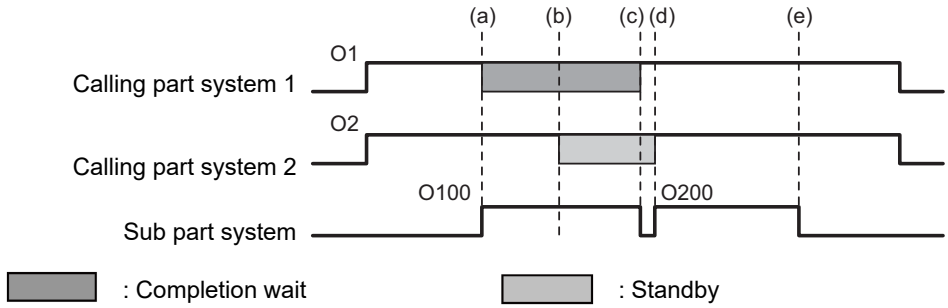

## Operation example

In the following example, the machining start timing is accelerated by controlling auxiliary axis with a sub part system and operating the main part system and the sub part system in parallel. The tool positioning starts to the machining start point at the same time (time T1) as the start of gantry retract by using sub part system completion wait cancel command (G145) in the flow from mounting the workpiece to moving to cut start position, after feeding and mounting the workpiece with the gantry, in order to reduce the cycle time. (The machine configuration below is a sample only.)

[Axis configuration]

Main part system ($1) : X1 axis, Z1 axis => Tool
Sub part system ($2) : X2 axis, Z2 axis => Workpiece feed gantry

[Machining process]

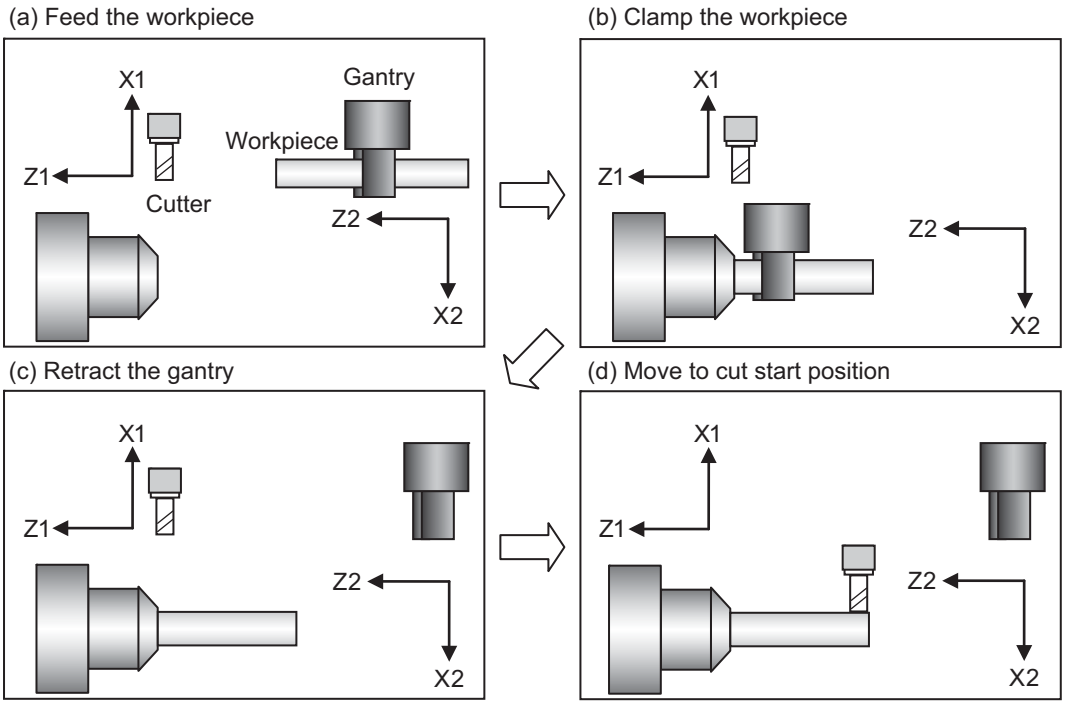

(1) Machining process when sub part system control is OFF

Main part system ($1)

```
O1
                    :
G140 X=X2 Z=Z2;     ... (a)
G00 X50.;
G00 Z20.;
M20;                ... (b)
G00 X0. Z0. ;       ... (c)
G141;
G00 X30. Z-15.;     ... (d)
G01 Z-20. F10.;
                    :
```

G140: Arbitrary axis exchange command (Lathe system only)
G141: Arbitrary axis exchange return command (Lathe system only)
M20 : M code of workpiece mounting

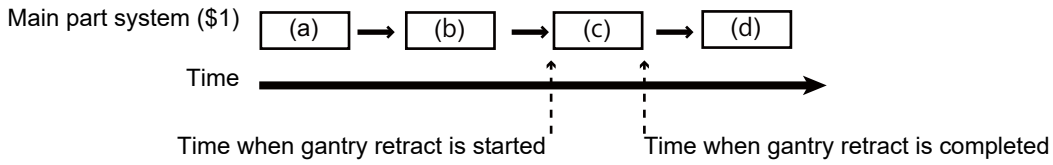


After the gantry is retracted, cut start position is determined.

(2) Machining process when sub part system control is ON

Main part system ($1)

```
O1
        :
        :
G122 A100 D0 B1;
G00 X30. Z-15.;     ... (d)
G01 Z-20. F10.;
        :
        :
```

Sub part system ($2)

```
O100
G00 X50.;       ... (a)
G00 Z20.;
M20;            ... (b)
G145;
G00 X0. Z0.;    ... (c)
        :
M99;
```

M20 : M code of workpiece mounting

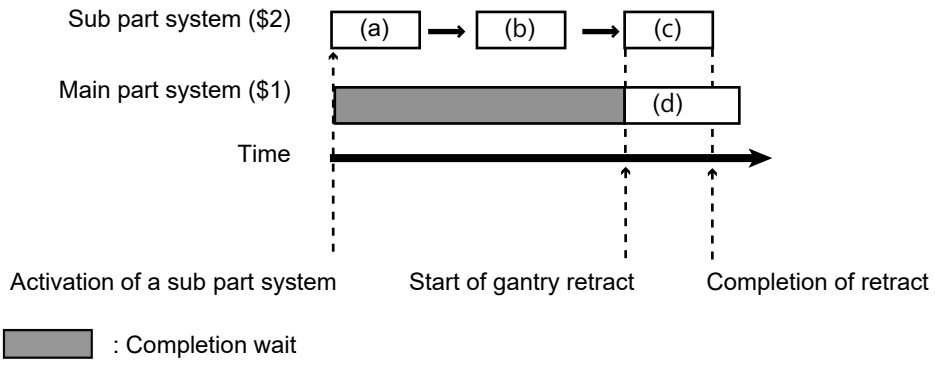


Processes after "(c) Retract gantry" and "(d) Move to cut start position" will be operated in parallel.

## Relationship with other functions

### Timing synchronization with sub part system

While a sub part system is under control, timing synchronization between part systems can be issued with the "![Part system No.]" command. To synchronize timing between a main part system and a sub part system, or between sub part systems, it is also possible to designate a sub part system identification No. (B command) as shown below. However, the number of part systems that can be used is limited by the specifications.

**![Sub part system identification No.]**

For example, to synchronize timing with the calling part system, command "![0]". Note that, designate the calling part system with "![0]", not the main part system.
(Example 1) and (Example 2) shown below are examples of the timing synchronization operation between the main part system ($3), sub part system 1 ($5, identification No. 1), and sub part system 2 ($6, identification No. 2).

(Example 1) Timing synchronization by designating a part system No.

| Main part system ($3) | Sub part system 1 ($5) | Sub part system 2 ($6) |
|---|---|---|
| :<br>G122 A100 D1 B1;<br>G122 A200 D1 B2;<br>:<br>!5!6;<br>G00 X100.;<br>:<br>: | :<br>:<br>:<br>:<br>!3!6;<br>:<br>:<br>: | :<br>:<br>:<br>:<br>!3!5;<br>:<br>:<br>: |
| Timing synchronization with 5th and 6th part systems | Timing synchronization with 3rd and 6th part systems | Timing synchronization with 3rd and 5th part systems |

(Example 2) Timing synchronization by designating a sub part system identification No.

| Main part system ($3) | Sub part system 1 ($5, identification No. 1) | Sub part system 2 ($6, identification No. 2) |
|---|---|---|
| :<br>G122 A100 D1 B1;<br>G122 A200 D1 B2;<br>:<br>![1]![2];<br>G00 X100.;<br>: | :<br>:<br>:<br>:<br>![0]![2];<br>:<br>: | :<br>:<br>:<br>:<br>![0]![1];<br>:<br>: |
| Timing synchronization with the following part system<br>•Sub part system of identification No. 1<br>•Sub part system of identification No. 2 | Timing synchronization with the following part system<br>•Calling part system ($3)<br>•Sub part system of identification No. 2 | Timing synchronization with the following part system<br>•Calling part system ($3)<br>•Sub part system of identification No. 1 |

Timing synchronization operation ignore signal

Whether to ignore the "![Sub part system identification No.]" command or not depends on the MTB specifications. (Setting of parameter "#1279 ext15/bit0" and the following PLC signals)

<table>
<tr><th rowspan="2">#1279 ext15/bit0</th><th rowspan="2">PLC signal for ignoring timing synchronization between part systems</th><th colspan="2">Operation</th></tr>
<tr><th>If the other part system is being activated as a sub part system</th><th>If the other part system is not being activated as a sub part system</th></tr>
<tr><td rowspan="2">0</td><td>ON</td><td rowspan="2">The timing synchronization operation is ignored when activation of a sub part system is completed for the other part system.</td><td rowspan="4">Program error (P35)</td></tr>
<tr><td>OFF</td></tr>
<tr><td rowspan="2">1</td><td>ON</td><td>Ignore the timing synchronization operation.</td></tr>
<tr><td>OFF</td><td>Execute the timing synchronization operation between part systems.</td></tr>
</table>

## Arbitrary axis exchange control

With the sub part system control I, axes that belong to the sub part system when the sub part system is activated can be controlled. To change the axis to be controlled, exchange axes (to transfer the control rights of the specified axis from other part systems to the own part system) with the arbitrary axis exchange return command (G140).

## Tool functions

If the tool No. is changed (T command) in the program run of a sub part system, the T code data will be changed for the sub part system only. The T code data will not be changed for the main part system or other sub part systems.

## Tool compensation

When an axis in the main part system, for which the tool compensation has been commanded, is moved to a sub part system with the arbitrary axis exchange or other operation, the tool compensation will be maintained. Also, when an axis (*1) in a sub part system, for which tool compensation has been commanded, is moved to the main part system or another sub part system with the arbitrary axis exchange operation, tool compensation will be maintained.

(*1) If tools are managed for each part system, the offset data to be referenced when the tool compensation command is issued in a sub part system is used as setting values for the sub part system. (The setting value of the main part system will not be referenced.)

## User macro

The sub part system control I command does not affect nesting in user macros and subprograms. It can be commanded from a subprogram nested at the deepest level.

## Synchronization between part systems

Like the main part system, sub part systems are also affected by the synchronization function between part systems, such as single block operation between part systems synchronized, and dwell/miscellaneous function time override. Also, depending on the specifications, like the main part system, the synchronization function between part systems can be disabled for sub part systems.

### Resetting

(1) If the NC reset signal is input to the main part system, the operation of the main part system will be reset and end immediately. However, the operation of sub part systems will continue. The reset operation of the sub part system follows the NC reset signal of the sub part system.

(2) If the NC reset signal is input to an operating sub part system, the operation of the sub part system will end immediately. Therefore, if the calling part system is in the sub part system completion standby state, the sub part system is reset, and at the same time, the calling part system cancels the standby state, and the following block will be executed.

### Buffer correction

If both of the following conditions (1) and (2) are satisfied, the buffer correction is disabled. (The buffer correction window will not open even if the program correction key is pressed.)

(1) The next block is G122 command (including "macro statement + G122 command").

(2) The program designated by G122 is the same as that of the calling part system.

| | |
|---|---|
| O100 | |
| : | |
| G00 Z50.; | Buffer correction possible |
| G00 X100.; | Buffer correction impossible |
| G122 A100 P77 D0 B1; | Designated program is the program (O100) of its own part system |
| G00 Y30.; | Buffer correction possible |
| : | |
| N77<br>:<br>M99; | Program operated in sub part system |

### Machining time computation

The completion wait time of the sub part system control I command (G122) will not be added to the machining time computation for the main part system.

### Program restart

If the restart search from the block of the G122 command is attempted, a program error (P49) will occur.

### Illegal modal of a sub part system control I command

If the sub part system control I (G122) is commanded during the following G command modal, a program error (P652) will occur.

- User macro modal call (G66, G66.1)
- Fixed cycle modal
- High-speed machining mode (G05P1, G05P2)
- High-speed high-accuracy control (G05.1Q1, G05P10000)

### Manual arbitrary reverse run

The sub part system control I (G122) is ignored at the reverse run or the forward run after the reverse run. Because the sub part systems are in a mode in which reverse run is prohibited, reverse run cannot be carried out in sub part systems.

## Precautions

(1) The sub part system control I command (G122) is a G code that must be issued alone. If another G code is commanded in the same block, a program error (P651) or (P32) occurs.

- If another G code is commanded before G122 (for example, when "G00 G122" is commanded), a program error (P651) occurs.
- If another G code is commanded after G122 (for example, when "G122 G00" is commanded), a program error (P32) occurs.

(2) While the sub part system I operation mode is in operation, even if the sub part system is not being activated, automatic operation cannot be started with the automatic operation start signal (ST). The stop code (0146) will be generated. However, when a sub part system is being activated, automatic operation is started with the automatic operation start signal (ST).

(3) If a sub part system identification No. of its own part system is designated for the B command with the sub part system control I command (G122), a program error (P650) will occur.

(4) The PLC signal of the sub part system references the state of the sub part system. (The signal state of the main part system will not be taken over.)

(5) Parameters per part system of the sub part system follow the setting in the sub part system. Therefore, parameters must also be set in the sub part system.

(6) If the sub part system completion wait cancel command (G145) is issued in the main part system, a program error (P34) occurs.

(7) The following operations are performed in the M80 series/C80 series. These parameter settings depend on the MTB specifications.

- Activation of a sub part system is only possible in sub part systems that are reserved using the parameter "#1483 SBS1_sys num". If the sub part system activation command is issued to a main part system (*1), an operation error (M01 1111) occurs.

  (*1) This refers to a case in which the sub part system I operation mode is established (SBSM: ON) using the PLC signal before G122 is commanded.
- Operation searches cannot be carried out in sub part systems that are reserved using the parameter "#1483 SBS1_sys num".
- (M80 series only) If the values set for the parameters "#1483 SBS1_sys num" and "#1474 SBS2_sys num" are both "1" or more, an MCP alarm (Y05 1483) will occur.

## 16.9.2 Sub Part System Control II ; G144

### Function and purpose

This function activates a sub part system (called part system) by issuing the G144 command in an arbitrary part system (calling part system). Using this function, main part system and sub part system can be operated in parallel, enabling a reduction of the cycle time. Use this function to move the tool to the cutting start position, while positioning C axis, etc.
When the sub part system control II is commanded, non-operating sub part systems are activated through the automatic identification.
(When the sub part system control I is commanded, sub part systems should be designated in the program.)
For the difference between sub part system control I and sub part system control II , refer to "16.9.1 Sub Part System Control I; G122".
The number of part systems that can be used is limited by the specifications.

The following describes the meanings of the terms used in this chapter.

| Term | Meaning |
|---|---|
| Main part system | Indicates a part system located on the uppermost stream side of a sub part system call flow. |
| Sub part system | Indicates a part system activated by the sub part system activation command. (Normal automatic operation cannot be performed.) |
| Calling part system | Indicates a part system that issued the sub part system activation command. |

### Command format

**Call sub part system**

| | |
|---|---|
| **G144 A__P__Q__K__D__B__H__ (argument);** | **(For G code lists 2 to 5)** |
| **G144 <file name> P__Q__K__D__B__H__ (argument);** | **(For G code lists 2 to 5)** |
| **G154 A__P__Q__K__D__B__H__ (argument);** | **(For G code lists 6 and 7)** |
| **G154 <file name> P__Q__K__D__B__H__ (argument);** | **(For G code lists 6 and 7)** |

**Complete sub part system**

| |
|---|
| **M99; (command of a sub part system side)** |

**Cancel the standby status for completion of sub part system (command of a sub part system side that is issued when the D0 command is issued)**

| | |
|---|---|
| **G145;** | **(For G code lists 2 to 5)** |
| **G155;** | **(For G code lists 6 and 7)** |

**Note**

(1) G145 is ignored in a sub part system activated in the parallel control method (D1 command).

| | |
|---|---|
| A | Program No. (1 to 99999999 or 100010000 to 199999998) |
| <File name> | File name of the program (up to 32 characters) |
| P | Start sequence number (Head of the program if omitted.) |
| Q | End sequence number (To end (M99) of the program if omitted.) |
| K | Number of repetitions (1 to 9999) |
| D | Synchronization control (0/1) |
| B | Sub part system identification No. (1 to 9999) |
| H | Sub part system designation (1 to 8) |
| Argument | Argument of a sub part system local variable (Setting rage of local variable (decimal point command is valid)) |

## Detailed description

This function can be used in multi-part systems of two or more part systems.

**Description of each address**

| Address | Meaning | Command range (unit) | Remarks |
|---|---|---|---|
| A | Program No. | 1 to 99999999 or 100010000 to 199999998 (*1) | Program No. or file name of the machining program operating in the sub part system.<br>•Programs in external device cannot be designated.<br>•If address A and <file name> are designated at the same time, precedence is given to address A.<br>•If designation of the program with A command or <file name> is omitted, the same program operating in the calling part system will be used for the program in sub part systems.<br>Only in this case, the start sequence No. must be designated. A program error (P33) will occur if there is no designation. |
| <File name> | File name of the program | Up to 32 characters. | |
| P | Start sequence No. | 1 to 99999999 | Sequence No. to start the machining program operating in the sub part system.<br>•If there is no command, the operation will start from the head of the machining program. |
| Q | End sequence No. | 1 to 99999999 | Sequence No. to end the machining program operating in the sub part system.<br>•If there is no command, the program will run up to M99. |
| K | Number of repetitions | 1 to 9999 | The number of times to repeat the machining program for continuous operation in the sub part system.<br>•If there is no command, the program will run only once. (No repetition) |

| Address | Meaning | Command range (unit) | Remarks |
|---|---|---|---|
| D | Synchronization control | 0 / 1 | Validity of synchronous control<br>0: The next block is processed after the sub part system operation completes.<br>1: The next block is processed at the same time as the start of a sub part system operation.<br>If there is no command, it is handled in the same manner as "0" is designated. |
| B | Sub part system identification No. | 1 to 9999 | Identification No. used for timing synchronization with sub part system, etc.<br>♦The sub part system to be activated is designated by an identification No.<br>♦A program error (P33) will occur if there is no command. |
| H | Sub part system designation | 1 to 8 | ♦Designate the part system number to be operated as the sub part system. Only in this case, a part system that is not designated as a sub part system in the parameter "#1474 SBS2_sys num" (the number of part systems in sub part system II) can be operated as a sub part system.<br>♦If not commanded, the bootable one of the sub part systems designated in the parameter "#1474 SBS2_sys num" (the number of part systems in sub part system II) is selected automatically. |
| (Argument) | Argument of a sub part system local variable | Setting range of local variable (Decimal point command is possible.) | ♦Argument is passed to the sub part system as a local variable (level 0).<br>However, addresses A, B, D, G, H, K, O, P, and Q cannot be used as an argument.<br>♦For the correspondence between address and variable number, refer to the following table. |

(*1) When the parameter "#1253 set25/bit0" is set to "1", the command range is "100010000 to 199999989".

**Correspondence of argument designation address and variable number in sub part system**

| Argument designation address | Variable number in sub part system |
|---|---|
| A | - |
| B | - |
| C | #3 |
| D | - |
| E | #8 |
| F | #9 |
| G | - |
| H | - |
| I | #4 |
| J | #5 |
| K | - |
| L | #12 |
| M | #13 |

| Argument designation address | Variable number in sub part system |
|---|---|
| N | #14 |
| O | - |
| P | - |
| Q | - |
| R | #18 |
| S | #19 |
| T | #20 |
| U | #21 |
| V | #22 |
| W | #23 |
| X | #24 |
| Y | #25 |
| Z | #26 |

**Note**

(1) Addresses can be designated in an arbitrary order.

(2) Addresses which do not need to be designated can be omitted.

(3) Local variables in a sub part system are initialized every time the sub part system is activated. Default value is <empty>.

(4) To use local variables in a sub part system, user macros must be available. For the available functions of each model, refer to the list.

### Operation program of a sub part system

When issuing the sub part system control II command, designate the program No. or program name to be operated in the sub part system with command address A or <file name>. If designation of the program is omitted, the same program operating in the calling part system will be used for the program in sub part systems. (In this case, the start sequence No. must be designated.)
If a machining program is managed for each part system, the program of the main part system will be operated (*1).
If a machining program is commonly managed between part systems, the designated program will be operated.

(*1) If the program of the part system No. for the main part system is empty, the program of the 1st part system ($1) will be operated. If the program of the 1st part system is also empty, a program error (P461) will occur.

(1) If program is managed for each part system

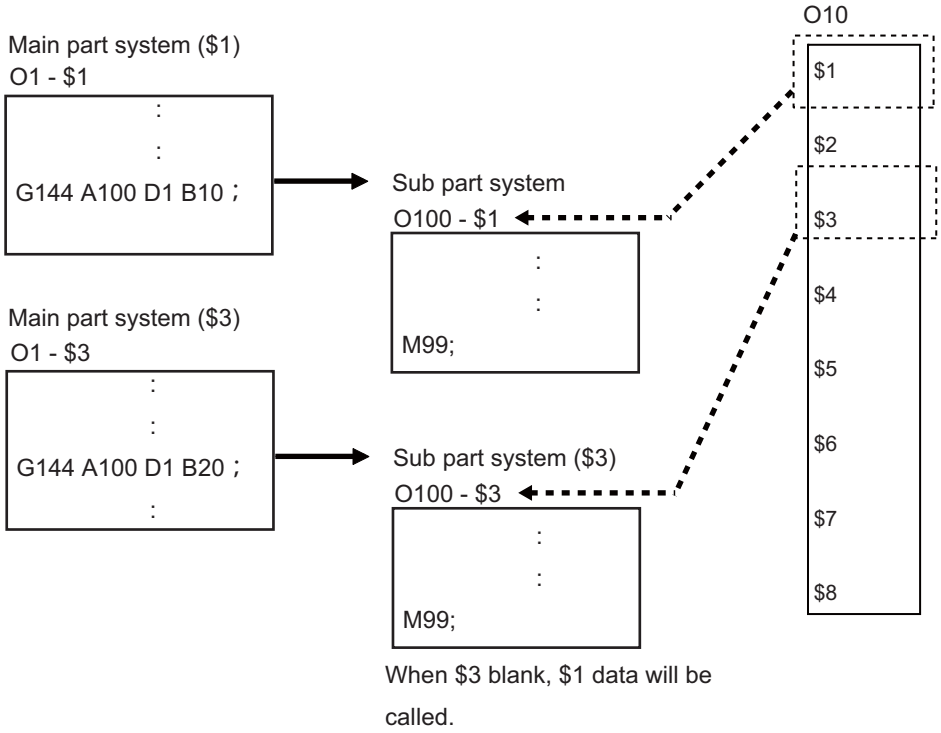


(2) If program is commonly managed between part systems

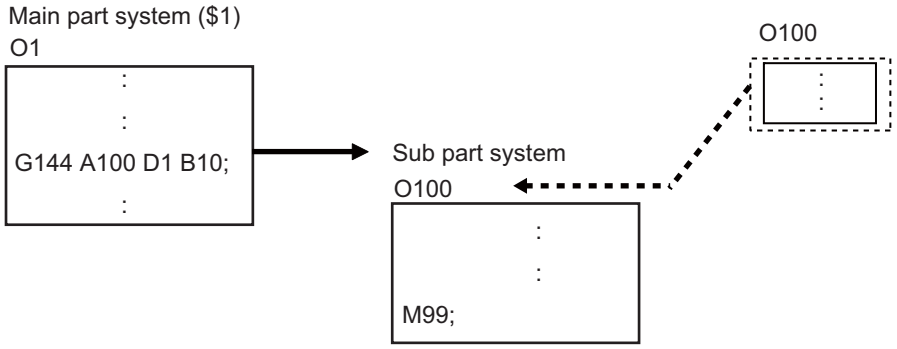

### Sub part system activation with the completion wait method (D=0)

If "0" is designated for command address D when the sub part system control II command is issued, or if command address D is omitted, the calling part system will wait for the called sub part system to complete (to M99 or the end sequence No.) before starting the next block.
Meanwhile, if the completion wait cancel command (G145) is issued in a sub part system while the calling part system is in the sub part system completion standby state, the machine will shift to a parallel processing mode.
The following shows the operation and the activation timing of each part system.

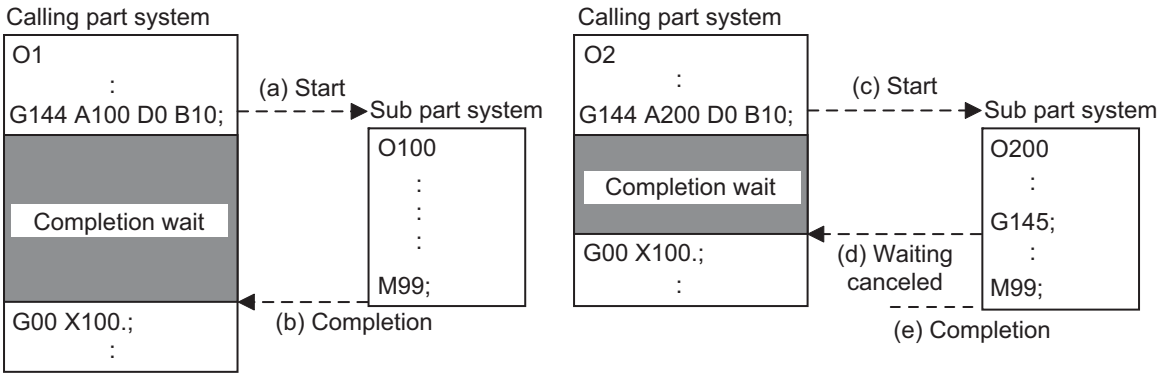


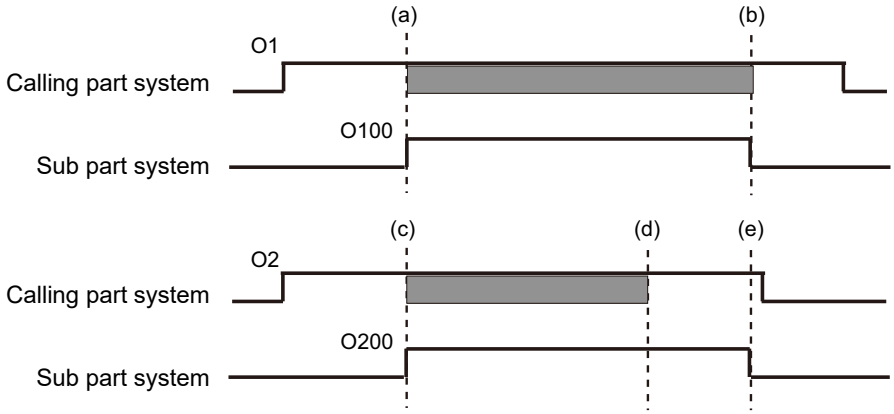


: Completion wait

### Activation of a sub part system with parallel processing mode (D=1)

If "1" is designated for command address D when the sub part system control II command is issued, the following blocks of the calling part system and the first and the following blocks of the sub part system will be operated in parallel.
The following shows the operation and the activation timing of each part system.

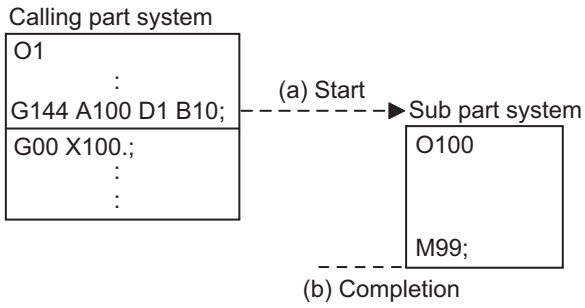


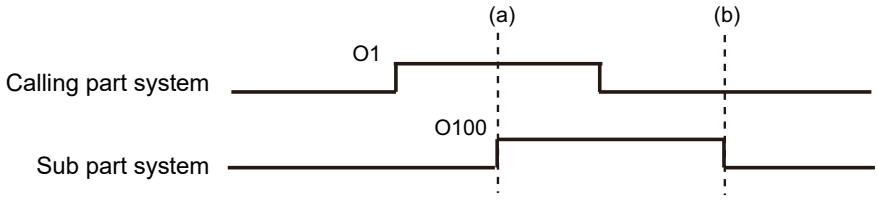


### Activation of multiple sub part systems

Multiple sub part systems can be activated in parallel during separate processes by calling from a single part system.
The number of sub part systems to be processed simultaneously depends on the model.
The following shows the operation and the activation timing of each part system.

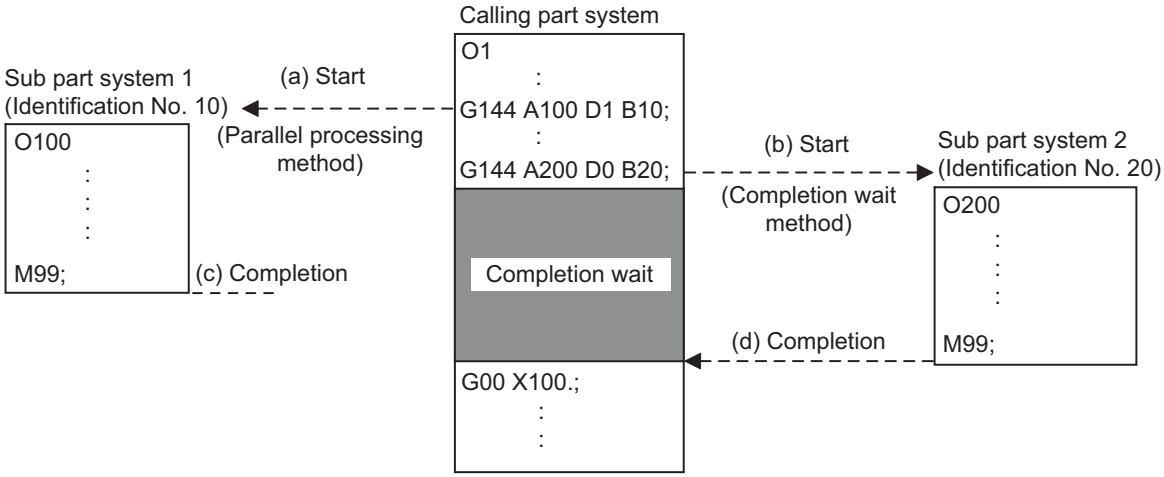


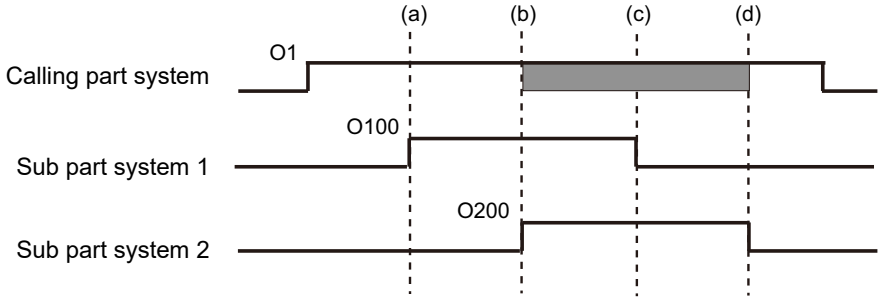


: Completion wait

### Activate a sub part system from another sub part system

A sub part system can be activated from another sub part system.
The number of sub part systems to be processed simultaneously depends on the model.
The following shows the operation and the activation timing of each part system.

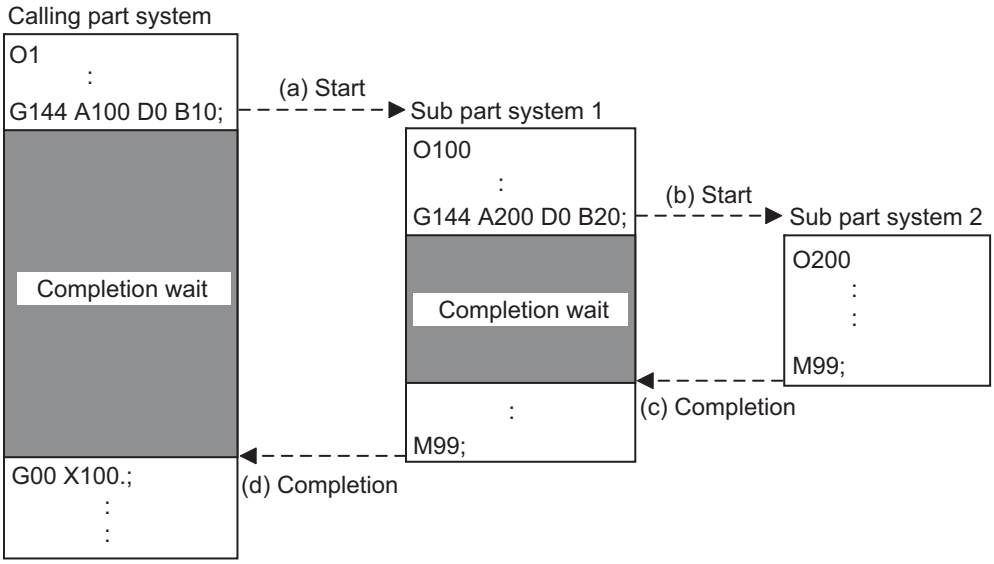


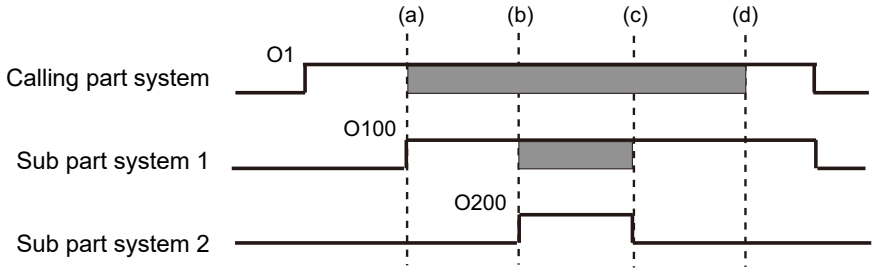


: Completion wait

### Sub part system activation command to a sub part system being activated

If G144 is commanded while a sub part system is being activated, using the same identification No. (B command), the machine will wait for the earlier sub part system to complete activation, before activating the next sub part system.
The following shows the operation and the activation timing of each part system.

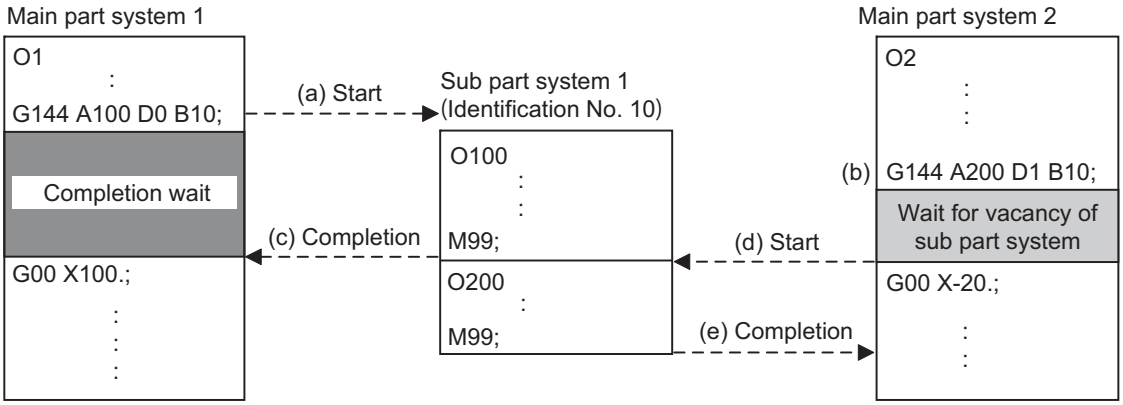


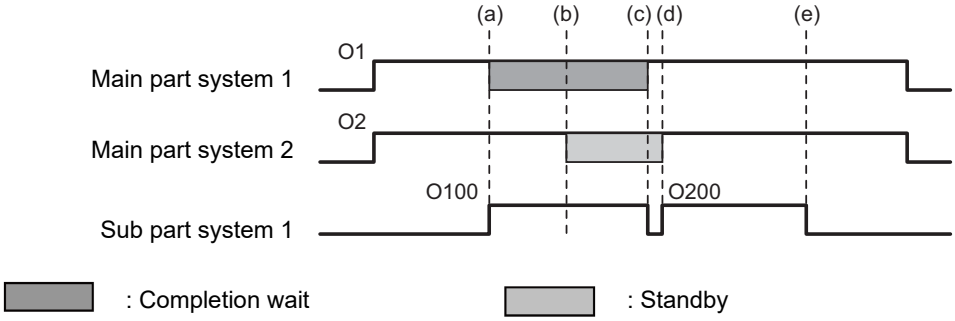


### Using a normal part system as a sub part system

To designate the part system to be operated as a sub part system, designate the part system number with the H command.
Only in this case, a part system that is not designated as a sub part system in the parameter can be operated as a sub part system.
If the designated part system is in the automatic or manual operation mode, an operation error (M01 1112) will occur.

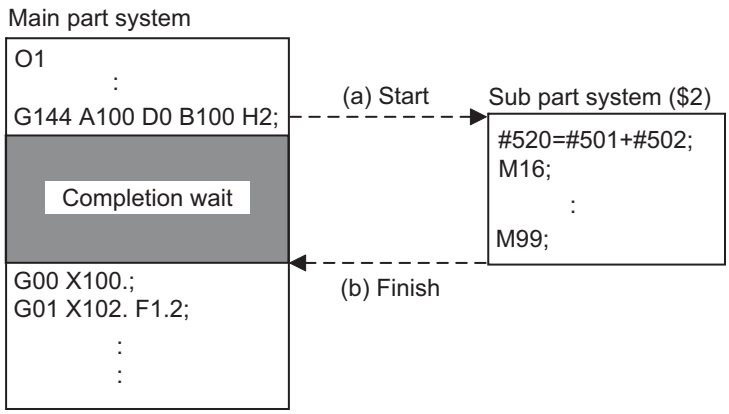

## Operation example

In the following example, multiple machining operations can be performed simultaneously by controlling some of the axes in the main part system with a sub part system and operating the main part system and the sub part system in parallel. When performing the back drill machining (machining 1) and the cutting by tool (machining 2), machining 1 and 2 are operated in order only with main part system, however machining 1 and 2 can be operated simultaneously by using the sub part system in addition to the main part system , resulting in a shorter cycle time. (The time when machining 2 is completed is shorter.)

[Axis configuration of main part system ($1)]

| | |
|---|---|
| Turret | :X1 axis, Z1 axis |
| Back drill | :A1 axis |

[Machining process]

| | |
|---|---|
| O1 | : Main machining program |
| O100 | : Back drill machining program |

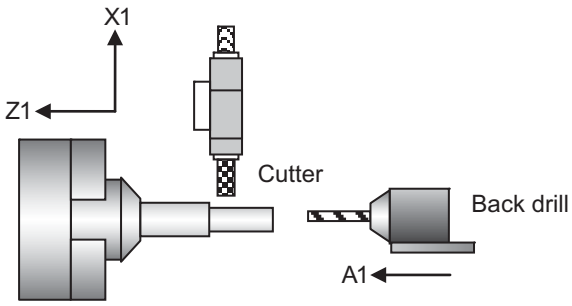

(1) Machining process when sub part system control is OFF

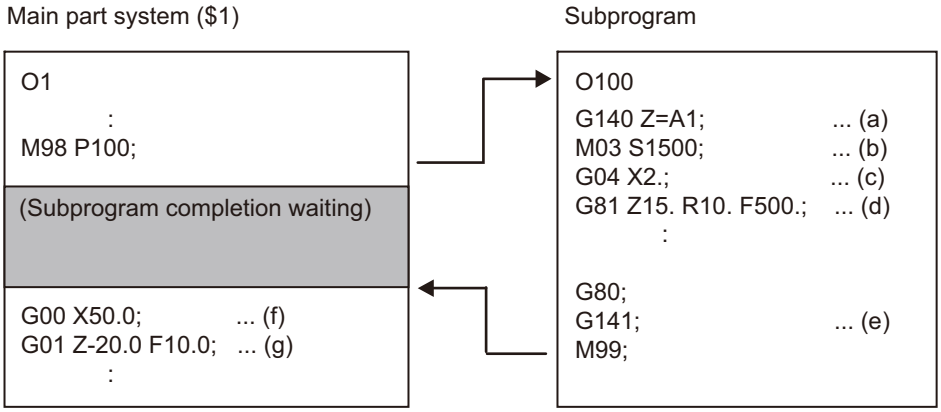


G140: Arbitrary axis exchange command (Lathe system only)
G141: Arbitrary axis exchange return command (Lathe system only)
G81 : Fixed cycle command

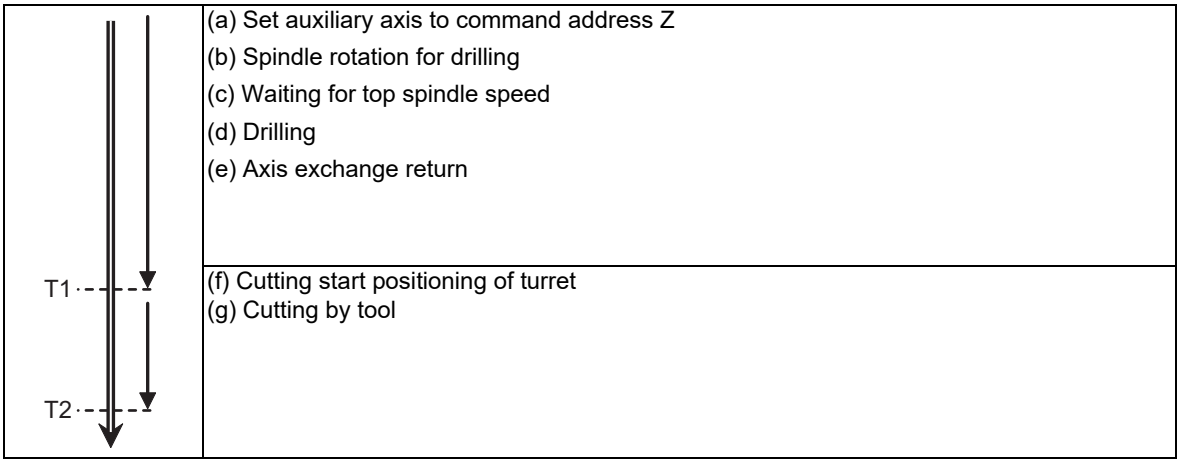


After the back drill machining is complete, cutting by tool is executed.

(2) Machining process when sub part system control is ON

Main part system ($1)

```
O1
        :
G144 A100 D1 B10;
G00 X50.0;              ... (a)
G01 Z-20.0 F10.0;       ... (b)
        :
```

Sub part system

```
O100
G140 Z=A1;              ... (a)
M03 S1500;              ... (b)
G04 X2. ;               ... (c)
G81 Z15. R10. F500. ;   ... (d)
G80;
G141;                   ... (e)
M99;
```

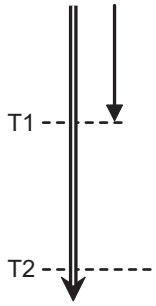


| Main part system ($1) | Sub part system |
|---|---|
| Cutting start positioning of turret | (a) Set auxiliary axis to command address Z |
| | (b) Spindle rotation for drilling |
| Cutting by tool | (c) Waiting for top spindle speed |
| | (d) Drilling |
| | (e) Axis exchange return |

Back drill machining and cutting by tool are executed by parallel operation.

## Relationship with Other Functions

### Timing synchronization with sub part system

While a sub part system is under control, timing synchronization between part systems can be issued with the "![Part system No.]" command. To synchronize timing between a main part system and a sub part system, or between sub part systems, it is also possible to designate a sub part system identification No. (B command) as shown below. However, the number of part systems that can be used is limited by the specifications.

**![Sub part system identification No.]**

For example, to synchronize timing with the calling part system, command "![0]". Note that, designate the calling part system with "![0]", not the main part system.
The following is an example of the timing synchronization operation between the main part system ($1), sub part system 1 (identification No. 10), and sub part system 2 (identification No. 20).

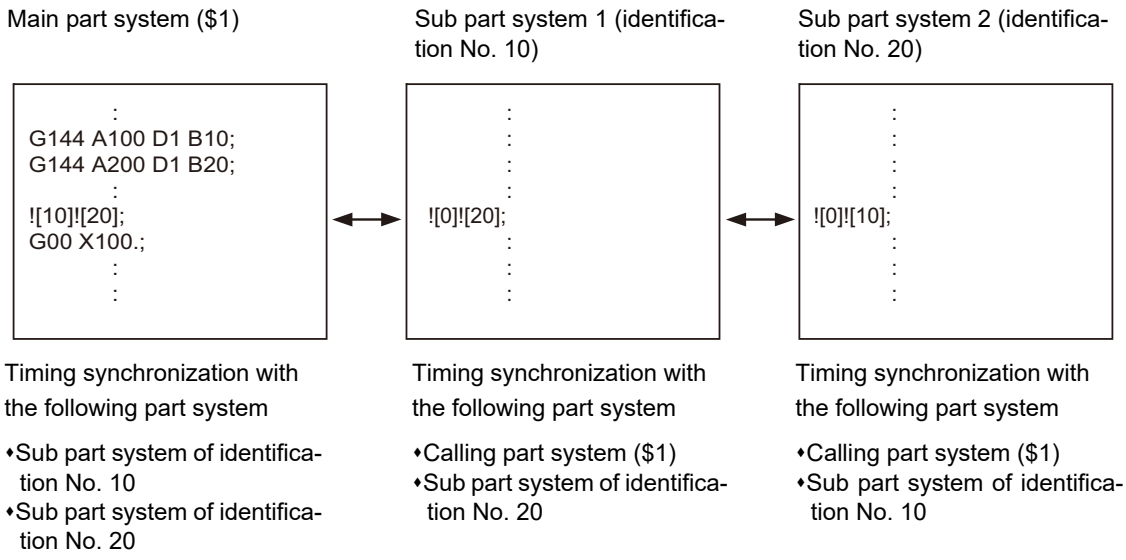


Timing synchronization operation ignore signal

Whether to ignore the "![Sub part system identification No.]" command or not depends on the MTB specifications. (Settings of parameter "#1279 ext15/bit0" and the following PLC signal)

| #1279 ext15/bit0 | PLC signal for ignoring timing synchronization between part systems | Operation | |
|---|---|---|---|
| | | **If the other part system is being activated as a sub part system** | **If the other part system is not being activated as a sub part system** |
| 0 | ON | If the timing synchronization with the calling part systems is not commanded in the other part system, the timing synchronization operation will be ignored when the operation is completed for the other part system. | Program error (P35) |
| | OFF | | |
| 1 | ON | Ignore the timing synchronization operation. | |
| | OFF | Execute the timing synchronization operation between part systems. | |

### Screen display of a sub part system

When the number of main part systems is designated in the parameter "#11055 Disp. sysno" (the number of part systems to be displayed), sub part systems are not displayed. (This parameter setting value depends on the MTB specifications.)

### Sub part system control II type of miscellaneous command macro

By setting the <type> of macro list parameter, the calling method can be selected. If the calling method (types 4, and 5) with sub part system control II is selected, the value of M code will be used as a sub part system identification No. (B command value).
In the macro calling with types 4 and 5, the default value of local variable #13 (variable number corresponding to argument M) is <empty>. (The M code value will not be passed.)

| Calling type | Calling method |
|---|---|
| 0 | Equivalent call to M98 PΔΔΔΔ; |
| 1 | Equivalent call to G65 PΔΔΔΔ; |
| 2 | Equivalent call to G66 PΔΔΔΔ; |
| 3 | Equivalent call to G66.1 PΔΔΔΔ |
| 4 | Equivalent call to G144 D0; (completion wait method) |
| 5 | Equivalent call to G144 D1; (parallel processing method) |
| Others | Equivalent call to M98 PΔΔΔΔ; |

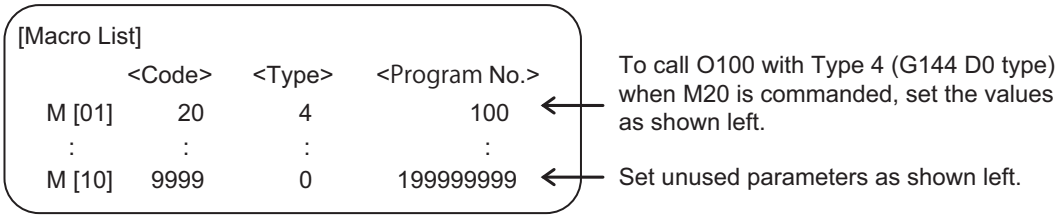


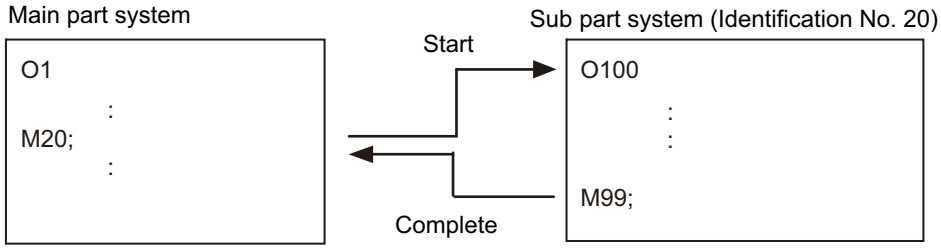


M20 = G144 A100 D0 B20

### Tool compensation

When an axis in the main part system, for which the tool compensation has been commanded, is moved to a sub part system with the arbitrary axis exchange or other operation, the tool compensation will be maintained. Also, when an axis (*1) in a sub part system, for which tool compensation has been commanded, is moved to the main part system or another sub part system with the arbitrary axis exchange operation, tool compensation will be maintained.

(*1) If tools are managed for each part system, the offset data to be referenced when the tool compensation command is issued in a sub part system is used as setting values for the main part system.

### Arbitrary Axis Exchange Control

In the sub part system control II, the just started sub part system has no axis. To control the axis in a sub part system, carry out axis exchange (to transfer the control rights of the specified axis from other part systems to the own part system) with the arbitrary axis exchange return command (G140).

### User macro

The sub part system control II command does not affect nesting in user macros and subprograms. It can be commanded from a subprogram nested at the deepest level.

### Synchronization between part systems

Like the main part system, sub part systems are also affected by the synchronization function between part systems, such as single block operation between part systems synchronized, and dwell/miscellaneous function time override. Also, depending on the specifications, like the main part system, the synchronization function between part systems can be disabled for sub part systems.

### Resetting

The reset operation of sub part system control II to be carried out when the NC reset 1 signal (NRST1), NC reset 2 signal (NRST2), or reset & rewind signal (RRW) is input to the main part system depends on the MTB specifications (parameter "#1437 SBS2_Spec/bit1").

| #1437 SBS2_Spec/bit1 | Reset operation |
|---|---|
| 0 | The operations of the main and sub part systems are immediately reset and ended even if a sub part system is executing a command. (These reset signals will be ignored if they are input to a sub part system.) |
| 1 | Only the main part system is reset. (Sub part systems are not reset.)<br>To reset a sub part system, input these reset signals to the sub part system. |

### Buffer correction

If both of the following conditions (1) and (2) are satisfied, the buffer correction is disabled. (The buffer correction window will not open even if the program correction key is pressed.)

(1) The next block is G144 command (including "macro statement + G144 command").

(2) The program designated by G144 is the same as that of the calling part system.

| | |
|---|---|
| O100 | |
| : | |
| G00 Z50.; | Buffer correction possible |
| G00 X100.; | Buffer correction impossible |
| G144 A100 P77 D0 B1; | Designated program is the program of its own part system (O100) |
| G00 Y30.; | Buffer correction possible |
| : | |
| N77<br>:<br>M99; | Program operated in sub part system |

Also, the buffer correction is not available for the program operating in a sub part system.

### Illegal modal of a sub part system control II command

If the sub part system control II (G144) is commanded during the following G command modal, a program error (P652) will occur.

- User macro modal call (G66, G66.1)
- Fixed cycle modal
- High-speed machining mode (G05P1, G05P2)
- High-speed high-accuracy mode (G05.1Q1, G05P10000)

### Functions that cannot be used in sub part system

If any of the following G codes is commanded in a sub part system, a program error (P653) will occur.

- Program data input command (G10)
- Automatic tool length measurement (G37)
- Workpiece coordinate system selection (G54 G59, G54.1)
- Barrier ON command (G22)

Barrier check is not available for the axis used in sub part system, even if the barrier has been enabled in the main part system.

## Precautions

(1) The sub part system control II command (G144) is a G code that must be issued alone in a single block. If another G code is commanded prior to G144, a program error (P651) will occur. If another G code is commanded following G144, a program error (P32) will occur.

(2) G command modals for the sub part system are initialized at activation.

(3) If the sub part system completion wait cancel command (G145) is issued in the main part system, the program error (P34) will occur.

(4) If the number of sub part systems reserved using the parameter "#1474 SBS2_sys num" (the number of part systems in sub part system II), or the number of main part systems (*1) exceeds the maximum number defined in the system specifications, an MCP alarm (Y05 1474) will occur.

(*1) Indicates the number of part systems that is determined by subtracting the number of sub part systems from the number of part systems for which "#1001 SYS_ON" is set to "1".

(5) In M80, an MCP alarm (Y05 1483) will occur if the values set for the parameters "#1483 SBS1_sys num" and "#1474 SBS2_sys num" are both "1" or more. These parameter settings depend on the MTB specifications.

(6) When the sub part system control II specifications are invalid, an MCP alarm (Y05 1474) will occur if the value set for the parameter "#1474 SBS2_sys num" is "1" or more.

# 17

# High-speed High-accuracy Control

# 17.1 High-speed Machining Mode

## 17.1.1 High-speed Machining Mode I, II; G05 P1, G05 P2

### Function and purpose

This function runs a machining program for which a freely curved surface has been approximated by fine segments at high speed.
A higher fine segment processing capability leads to a faster cutting speed, resulting in a shorter cycle time and a better machining surface quality.
The high-speed high-accuracy control I/II enable not only the high-speed machining mode but also the high-accuracy control mode. Use the high-speed high-accuracy control I/II for machining which needs to make an edge at a corner or reduce an error from an inner route of curved shape.
This function can be used simultaneously for up to two part systems depending on the MTB specifications.
kBPM, the unit for the fine segment processing capability, is an abbreviation of "kilo blocks per minute" and refers to the number of machining program blocks that can be processed per minute.
In the main text, the axis address refers to the address of an axis that exits on the machine.
It corresponds to the address designated in the parameters "#1013 axname" and "#1014 incax".
These parameter settings depend on the MTB specifications.

**For one part system**

G01 block fine segment processing capability for 1 mm segment (unit: kBPM)

| Mode | Command | Maximum feedrate when 1 mm segment G01 block is executed (kBPM) | | | | |
|---|---|---|---|---|---|---|
| | | M850/M830 | M80W | M80 | | C80 |
| | | | | Type A | Type B | |
| High-speed machining mode I | G05 P1 | 33.7 | 33.7 | 33.7 | - | 33.7 |
| High-speed machining mode II | G05 P2 | 168 | 67.5 | 67.5 | - | 67.5 |

**Note**

(1) The above performance applies under the following conditions.

- 6-axis system (including spindle) or less
- 1-part system
- 3 axes or less commanded simultaneously in G01
- The block containing only the axis name and movement amount (Macro and variable command are not included.)
- In the "G61.1" high-accuracy control mode or cutting mode (G64)
- During tool nose radius compensation cancel (G40) (only in the high-speed machining mode II)

When the above conditions are not satisfied, the given feedrate may not be secured.

(2) The performance in the table may vary depending on the combination with other functions.

### Multi-part system (high-speed machining mode II)

G01 block fine segment processing capability for 1 mm segment (unit: kBPM)

| | Specified number of part systems (#8040 = 1) | Maximum feedrate when 1 mm segment G01 block is executed (kBPM) | | |
|---|---|---|---|---|
| | | M850/M830 | M80 | |
| | | | Type A | Type B |
| 1-part system | 1 part system | 168 | 67.5 | - (*2) |
| 2-part system | 1 part system only | 100 | 67.5 | - (*2) |
| | Two part systems simultaneously | 67.5 | 33.7 | - (*2) |
| 4-part system Up to 16 axes | 1 part system only | 33.7 | - (*1) | - (*2) |
| | Two part systems simultaneously | 33.7 | - (*1) | - (*2) |
| 5 part systems or more or 17 axes or more | 1 part system only | 16.8 | - (*1) | - (*2) |
| | Two part systems simultaneously | 16.8 | - (*1) | - (*2) |

(*1) This system cannot be used for this model.

(*2) There are no high-speed machining mode II specifications.

**Note**

(1) The above performance applies under the following conditions.

- 3 axes commanded simultaneously in G01
- The block containing only the axis name and movement amount (Macro and variable command are not included.)
- Tool nose radius compensation cancel (G40) mode

When the above conditions are not satisfied, the given feedrate in the table may not be secured.

(2) The performance in the table may vary depending on the combination with other functions.

(3) The number of part systems and axes that can be used depends on the specifications of your machine tool.

## Command format

**High-speed machining mode I ON**

```
G05 P1 ;
```

**High-speed machining mode II ON**

```
G05 P2 ;
```

**High-speed machining mode I/II OFF**

```
G05 P0 ;
```

In addition to the G05 P0 command, the high-speed machining mode I is canceled when the high-speed machining mode II (G05 P2) is commanded.
In reverse, the high-speed machining mode II is canceled when the high-speed machining mode I (G05 P1) is commanded.

Command G05 alone in a block. A program error (P33) occurs if a movement or other command is additionally issued in a G05 command block. A program error (P33) also occurs if there is no P command in a G05 command.
In addition to cancel the high-speed machining mode II, a G05 P0 command is also used to cancel the high-speed high-accuracy control II.
Refer to "17.3 High-speed High-accuracy Control" for details.

## Detailed description

(1) The override, maximum cutting speed clamp, single block operation, dry run, manual interruption and graphic trace and high-accuracy control mode are valid even during the high-speed machining mode I/II.
For a part system that uses the high-speed machining mode II, "1" must be set for the parameter "#8040 High-SpeedAcc". By default, the high-speed machining mode II can only be used in the first part system.

(2) When using the high-speed machining mode II, setting to eliminate the speed fluctuation at the seams between the arc and the straight line, or between arcs depends on the MTB specifications (parameter "#1572 Cirorp/bit1").

(3) Combination with high-accuracy control

The high-speed machining mode and high-accuracy control can be used simultaneously by taking the following steps:

(a) Set "1" for the parameter "#8040 High-SpeedAcc".

(b) Command "G05 P2" and "G08 P1" or "G61.1" from the machining program.

The parameter "#8040 High-SpeedAcc" can be set to "1" for up to two part systems. If "0" is set for all part systems, the first and second part systems can use the high-speed machining mode and high-accuracy control simultaneously.

Also refer to the following for the description of each function:

- High-accuracy control: "17.2 High-accuracy Control"
- Simultaneous usage of the high-speed machining mode and high-accuracy control: "17.3 High-speed High-accuracy Control"

(4) If the variable command, variable operation command, or macro control statement is commanded while high-speed machining mode II is valid, the fine segment processing capability decreases. However, only when the variable commands and variable four-basic-arithmetic operation commands shown below are issued following the axis address or the F address of the cutting feedrate command, the fine segment processing capability does not decrease.

(a) Referencing common variables or local variables

Common variables or local variables can be referenced (example: X#500, Y#1, Z##100, A#[#101], etc.).

(b) Four basic arithmetic rule

Four basic arithmetic rule (+, -, *, /) operations are available, and also the operation priority can be designated using parentheses ( ) ([#500 + 1.0] * #501, etc.).

If a common variable or local variable is referenced using the variable number operated with a macro operation instruction, a program error (P282) may occur. In this case, set the operated value to the variable before referencing the variable.

| | |
|---|---|
| Example that causes an error | F#[FIX[100.1]]; |
| Example that does not cause an error | #500 = FIX[100.1] ;<br>F#[#500] ; |

(5) If geometric command is programmed while high-speed machining mode II is active, a program error (P33) occurs.

## Program example

**High-speed machining mode I**

| | |
|---|---|
| G28 X0. Y0. Z0. ; | |
| G91 G00 X-100. Y-100. ; | |
| G01 F10000 ; | |
| G05 P1 ; | High-speed machining mode I ON |
| : | |
| X0.1 Y0.01 ; | |
| X0.1 Y0.02 ; | |
| X0.1 Y0.03 ; | |
| : | |
| G05 P0 ; | High-speed machining mode I OFF |
| M30 ; | |

### Note

(1) When using the incremental command (G91), set the G code list "3".

## Relationship with other functions

### Relationship between the high-speed machining mode II and G code functions

Column A: Operation when the combination function is commanded while the high-speed machining mode II is enabled

Column B: Operation when the high-speed machining mode II (G05P2) is commanded while the combination function is enabled

○: The high-speed machining mode II and the additional function are both enabled

Δ: The high-speed machining mode II is temporarily canceled, while the additional function is enabled

x: Alarm generation (the text in parentheses refers to the number of the program error to be generated)

-: No combination

□: Others

| Group | G code (G code list: 3) | Additional function | A | B |
|---|---|---|---|---|
| 0 | G04 | Dwell | Δ | - |
| | G05 P0 | High-speed machining mode II OFF<br>High-speed high-accuracy control II OFF | □ (*1) | □ (*2) |
| | G05 P2 | High-speed machining mode II ON | □ (*3) | □ (*3) |
| | G05 P10000 | High-speed high-accuracy control II ON | □ (*4) | □ (*2) |
| | G05.1 Q0 | High-speed high-accuracy control I OFF<br>Spline interpolation OFF | □ (*3) | □ (*2) |
| | G05.1 Q1 | High-speed high-accuracy control I ON | □ (*5) | □ (*2) |
| | G08 P0 | High-accuracy control OFF | □ (*3) | □ (*2) |
| | G08 P1 | High-accuracy control ON | □ (*6) | □ (*6) |
| | G09 | Exact stop check | Δ | - |
| | G10 I_J_<br>G10 K_ | Parameter coordinate rotation input | Δ | - |
| | G10 L2 | Compensation data input by program | Δ | - |
| | G10 L70<br>G10 L50 | Parameter input by program | Δ | - |
| | - (G22(*)) | Soft limit ON | ○ | ○ |
| | - (G23(*)) | Soft limit OFF | ○ | ○ |
| | G27 | Reference position check | Δ | - |
| | G28 | Reference position return | Δ | - |
| | G29 | Start position return | Δ | - |
| | G30 | 2nd to 4th reference position return | Δ | - |
| | G30.1 | Tool exchange position return 1 | Δ | - |
| | G30.2 - G30.5 | Tool exchange position return 2 to 5 | Δ | - |
| | G31 | Skip<br>Multi-step skip 2 | Δ | - |
| | G31.1 - G31.3 | Multi-step skip 1 to 3 | Δ | - |
| | G37 (G36/G37, G37.1, G37.2(*)) | Automatic tool length measurement | Δ | - |
| | G92 | Spindle clamp speed setting<br>Coordinate system setting | Δ | - |

| Group | G code (G code list: 3) | Additional function | A | B |
|---|---|---|---|---|
| 0 | - (G50.2, G250(*)) | Polygon machining mode OFF | ○ | ○ |
| | - (G51.2, G251(*)) | Polygon machining mode ON | Δ | Δ |
| | G92.1 | Workpiece coordinate system preset | Δ | - |
| | G52 | Local coordinate system setting | Δ | - |
| | G53 | Machine coordinate system selection | Δ | - |
| | G65 | User macro simple call | □ (*7) | □ (*8) |
| | G110 | Mixed control I (cross axis control) | ○ | ○ |
| | G111 | Axis name switch | ○ | ○ |
| | G113 | Spindle synchronization control OFF | ○ | ○ |
| | G114.1 | Spindle synchronization control ON | Δ | Δ |
| | G114.2 | Tool spindle synchronization I (polygon machining mode) | Δ | Δ |
| | G114.3 | Tool spindle synchronization II (hobbing mode) | Δ | Δ |
| | G115<br>G116 | Start point timing synchronization | Δ | - |
| | G117 | M code output during axis traveling | Δ | - |
| | G122 | Sub part system control I | × (P652) | □ (*9) |
| | G125 | Control axis synchronization between part systems | ○ | ○ |
| | G126 | Control axis superimposition | Δ | × (P29) |
| | G140 | Arbitrary axis exchange control | × (P34) | ○ |
| | G141 | Arbitrary axis exchange return | × (P34) | - |
| | G142 | Reference axis arrange return | × (P34) | - |
| | G144 | Sub part system control II | × (P652) | □ (*9) |
| 1 | G00 | Positioning | Δ | Δ |
| | G01 | Linear interpolation | ○ | ○ |
| | G02<br>G03 | Circular interpolation | ○ | ○ |
| | G02.3<br>G03.3 | Exponential interpolation | Δ | Δ |
| | G33 | Thread cutting | Δ | Δ |
| | G34 | Variable lead thread cutting | Δ | Δ |
| | G35<br>G36 | Circular thread cutting | Δ | Δ |
| 2 | G16 | Milling interpolation plane selection (Y-Z cylindrical plane) | × (P34) | × (P34) |
| | G17<br>G18<br>G19 | Plane selection | ○ | ○ |
| 3 | G90 | Absolute command | ○ | ○ |
| | G91 | Incremental command | ○ | ○ |
| 4 | G22 | Barrier check ON | Δ | Δ |
| | G23 | Barrier check OFF | ○ | ○ |
| 5 | G94 | Asynchronous feed (feed per minute) | ○ | ○ |
| | G95 | Synchronous feed (feed per revolution) | Δ | Δ |
| 6 | G20 | Inch command | ○ | ○ |
| | G21 | Metric command | ○ | ○ |

| Group | G code (G code list: 3) | Additional function | A | B |
|---|---|---|---|---|
| 7 | G40 | Tool nose radius compensation OFF | ○ | ○ |
| | G41<br>G42 | Tool nose radius compensation ON | ○ | ○ |
| | G46 | Tool nose radius compensation ON (automatic direction identification) | ○ | ○ |
| 9 | G80 | Fixed cycle cancel | ○ | ○ |
| | Other than G80 | Fixed cycle | Δ | Δ |
| 10 | G98 | Fixed cycle (Initial level return) | ○ | ○ |
| | G99 | Fixed cycle (R point level return) | ○ | ○ |
| 12 | G54 - G59<br>G54.1 | Workpiece coordinate system selection | ○ | ○ |
| 13 | G61 | Exact stop check mode | Δ | Δ |
| | G61.1 | High-accuracy control | ○ | ○ |
| | G62 | Automatic corner override | Δ | Δ |
| | G63 | Tapping mode | Δ | Δ |
| | G64 | Cutting mode | ○ | ○ |
| 14 | G66<br>G66.1 | User macro modal call | Δ | Δ |
| | G67 | User macro modal call cancel | ○ | ○ |
| 15 | G68 | Mirror image for facing tool posts ON | × (P29) | × (P29) |
| | G69 | Mirror image for facing tool posts OFF | ○ | ○ |
| | - (G68(*)) | Mirror image for facing tool posts ON | × (P29) | × (P29) |
| | | Balance cut ON | × (P29) | × (P29) |
| | - (G69(*)) | Mirror image for facing tool posts OFF | ○ | ○ |
| | | Balance cut OFF | ○ | ○ |
| 16 | G68.1 | Coordinate rotation by program ON | ○ | ○ |
| | | 3-dimensional coordinate conversion ON | × (P922) | × (P921) |
| | G69.1 | Coordinate rotation by program OFF | ○ | ○ |
| | | 3-dimensional coordinate conversion OFF | ○ | ○ |
| 17 | G96 | Constant surface speed control ON | ○ | ○ |
| | G97 | Constant surface speed control OFF | ○ | ○ |
| 18 | G14 | Balance cut OFF | ○ | ○ |
| | G15 | Balance cut ON | × (P29) | × (P29) |
| 19 | G12.1 | Milling interpolation ON | × (P34) | × (P481) |
| | G13.1 | Milling interpolation OFF | ○ | ○ |
| | - (G07.1, G107(*)) | Cylindrical interpolation | × (P34) | × (P481) |
| | - (G12.1, G112(*)) | Polar coordinate interpolation ON | × (P34) | × (P481) |
| | - (G13.1, G113(*)) | Polar coordinate interpolation OFF | ○ | ○ |
| 20 | G43.1 | 1st spindle control mode | ○ | ○ |
| | G44.1 | 2nd spindle control mode | ○ | ○ |
| | G47.1 | All spindles simultaneous control mode | ○ | ○ |
| 24 | G188 | Program format switch ON | □ (*10) | ○ |
| | G189 | Program format switch cancel | □ (*10) | ○ |

(*) Only applies to G code lists 6 and 7

(*1) Disables the high-speed machining mode II.

(*2) Enables the high-speed machining mode II.

(*3) High-speed machining mode II continues.

(*4) Enables the high-speed high-accuracy control II.

(*5) Enables the high-speed high-accuracy control I.

(*6) Enables the high-speed machining mode II and high-accuracy control.

(*7) Enables the high-speed machining mode II in a macro program.

(*8) Enables the high-speed machining mode II if G05P2 is commanded in a macro program.

(*9) Enables the high-speed machining mode II if G05P2 is commanded in a sub part system.

(*10) Depends on the setting of the parameter "#1148 Initial hi-precis".

### Relationship between the high-speed machining mode II and functions other than G codes

Column A: Operation when the additional function is commanded while the high-speed machining mode II is enabled

Column B: Operation when the high-speed machining mode II (G05P2) is commanded while the additional function is enabled

○: The high-speed machining mode II and the additional function are both enabled

Δ: The high-speed machining mode II is temporarily canceled, while the additional function is enabled

x: Alarm generation (the text in parentheses refers to the number of the program error to be generated.)

-: No combination

□: Others

| Additional function | A | B |
|---|---|---|
| SSS ON | - | ○ |
| Mirror image by parameter setting ON | - | Δ |
| Mirror image by external input | - | Δ |
| Subprogram call (M98) | □ (*1) | □ (*2) |
| Timing synchronization between part systems | □ (*3) | - |
| Inclined axis control | - | ○ |
| T code offset | ○ | ○ |
| T code mirror image for facing tool posts | × (P29) | × (P29) |
| Machine tool builder macro | □ (*4) | □ (*5) |
| Macro interruption | □ (*6) | □ (*7) |
| Corner chamfering/Corner R | Δ | - |
| Linear angle command | Δ | - |
| Geometric command | × (P33) | - |
| Chopping | ○ | ○ |
| Optional block skip | ○ | - |

(*1) Enables the high-speed machining mode II in a subprogram.

(*2) Enables the high-speed machining mode II if G05P2 is commanded in a subprogram.

(*3) Enables timing synchronization.

(*4) Enables the high-speed machining mode II in a MTB program.

(*5) Enables the high-speed machining mode II if G05P2 is commanded in a MTB program.

(*6) Enables the high-speed machining mode II in an interrupt program.

(*7) Enables the high-speed machining mode II if G05P2 is commanded in an interrupt program.

### Precautions

(1) If "G05 P1(P2)" is commanded when the high-speed machining mode I/(II) specifications are not provided, a program error (P39) occurs.

(2) The automatic operation process has priority in high-speed machining mode I/II, and as a result, the screen display may slow down.

(3) The speed will decelerate once at the G05 command block, so turn ON and OFF when the tool separates from the workpiece.

(4) When carrying out operations in high-speed machining mode I/II by communication or tape mode, the machining speed may be suppressed depending on the program transmission speed limit.

(5) Command G05 alone in a block.

(6) A decimal point is invalid for the P address in the G05 command block.

(7) The P addresses, which are valid in the G05 command block, are P0, P1 and P2 only.
If other P addresses are commanded, a program error (P35) occurs.
If there is no P command, a program error (P33) occurs.

(8) The machining speed may be suppressed depending on the number of characters in one block.

# 17.2 High-accuracy Control

## 17.2.1 High-accuracy Control ; G61.1, G08

### Function and purpose

Machining errors caused by delays in control systems can be inhibited. This function is useful for machining which needs to make an edge at a corner or reduce an error from an inner route of curved shape. In high-accuracy control, acceleration/deceleration is performed not to cause machining error by pre-reading blocks and acceleration/deceleration is automatically performed according to a machining shape so that the machining error is inhibited with minimizing an extension of machining time.

| | High-accuracy control OFF | High-accuracy control ON |
|---|---|---|
| Corner shape | 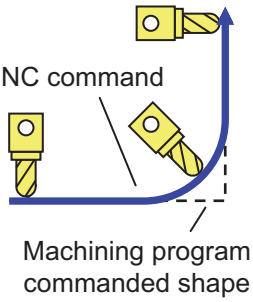 | 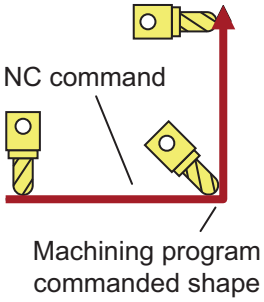 |
| Curve shape | 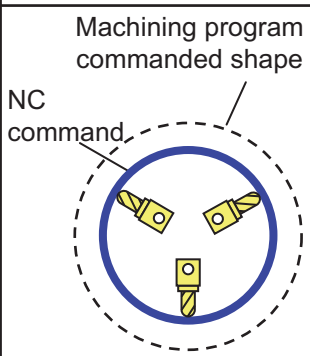 | 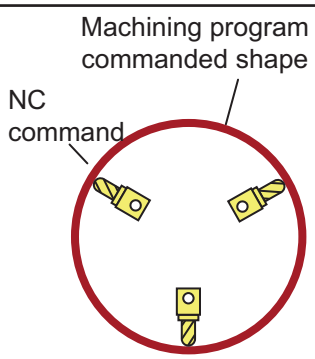 |

Commands to enable high-accuracy control are as follows:

- High-accuracy control command (G08P1/G61.1)
- High-speed high-accuracy control I command (G05.1Q1)
- High-speed high-accuracy control II command (G05P10000)

This function uses the following functions to minimize the increase in machining time while reducing the shape error.

(1) Acceleration/deceleration before interpolation

(2) Optimum speed control

(3) Vector accuracy interpolation

(4) Feed forward

(5) S-pattern filter control

In the main text, the axis address refers to the address of an axis that exits on the machine.
It corresponds to the address designated in the parameters "#1013 axname" and "#1014 incax".
These parameter settings depend on the MTB specifications.

## Command format

### High-accuracy control valid

```
G61.1 ;
or, G08 P1;
```

### High-accuracy control invalid

```
G08 P0;
or, G command in G code group 13 except G61.1
```

High-accuracy control can be canceled with either command regardless of the command that has enabled the control.

**Note**

(1) After "G08 P1" is commanded, G code group 13 is automatically switched to the G61.1 modal.
If the high-accuracy control mode is canceled by the "G08 P0" command, G code group 0 is switched to the "G08P0" modal and G code group 13 becomes the "commanded mode".

## Detailed description

(1) Feedrate command F is clamped with the "#2110 Clamp (H-precision)" (Cutting feed clamp speed for high-accuracy control mode) set with the parameter.

(2) Rapid traverse rate enables "#2109 Rapid(H-precision)" (Rapid traverse rate during high-accuracy control mode) set by the parameter.

(3) When the "#2109 Rapid(H-precision)" is set to "0", the movement follows "#2001 rapid" (rapid traverse rate) set by the parameter. Also, when "#2110 Clamp (H-precision)" is set to "0", the speed will be clamped with "#2002 clamp" (Cutting clamp speed) set with parameter.

(4) The modal holding state of the high-accuracy control mode depends on the MTB specifications (combination of the parameters "#1151 rstint" (reset initial) and "#1148 I_G611" (initial high-accuracy)).

| Parameters | | Default state | Resetting | | |
|---|---|---|---|---|---|
| **Reset initial (#1151)** | **Initial high-accuracy (#1148)** | **Power ON** | **Reset 1** | **Reset 2** | **Reset & rewind** |
| **OFF** | **OFF** | OFF | Hold | OFF | |
| **ON** | | | OFF | | |
| **OFF** | **ON** | ON | Hold | ON | |
| **ON** | | | ON | | |

| Parameters | | Emergency stop | Emergency stop cancel |
|---|---|---|---|
| **Reset initial (#1151)** | **Initial high-accuracy (#1148)** | **Emergency stop switch or external emergency stop** | **Emergency stop switch or external emergency stop** |
| **OFF** | **OFF** | Hold | Hold |
| **ON** | | | OFF |
| **OFF** | **ON** | Hold | Hold |
| **ON** | | | ON |

| Parameters | | Block interruption | Block stop | NC alarm | OT |
|---|---|---|---|---|---|
| **Reset initial (#1151)** | **Initial high-accuracy (#1148)** | Mode changeover (automatic/manual) or feed hold | Single block | Servo alarm | H/W OT |
| **OFF** | **OFF** | Hold | | | |
| **ON** | | | | | |
| **OFF** | **ON** | | | | |
| **ON** | | | | | |

Hold: Modal hold

ON: Switches to the high-accuracy control mode

As for G61.1, the mode is switched to the high-accuracy mode, even if the other modes (G61 to G64) are valid.

OFF: The status of the high-accuracy control mode is OFF.

### Acceleration/deceleration before interpolation

Acceleration/deceleration control is carried out for the movement commands to suppress the impact and to smooth out the velocity waveform when the machine starts or stops moving. However, if high-accuracy control is disabled, the corners at the block seams are rounded, and path errors occur regarding the command shape because acceleration/deceleration is performed after interpolation.
In the high-accuracy control function mode, acceleration/deceleration is carried out before interpolation to solve the above problems. This acceleration/deceleration before interpolation enables machining with a faithful path to the commanded shape of the machining program.
Furthermore, the acceleration/deceleration time can be reduced because the constant-gradient acceleration/deceleration is performed for the acceleration/deceleration before interpolation.

(1) Basic patterns of acceleration/deceleration control in linear interpolation commands

| | Acceleration/deceleration waveform pattern | |
|---|---|---|
| **Normal mode** | 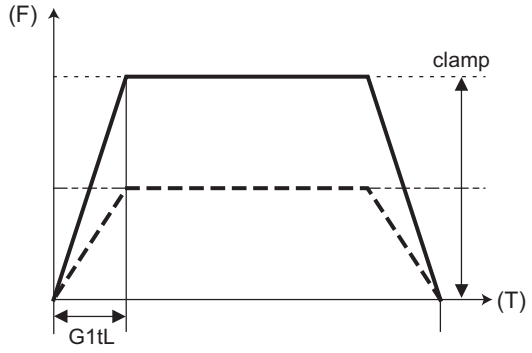 | (a) Because of the acceleration/deceleration that controls the acceleration time to achieve the commanded speed at a constant level (acceleration/deceleration with fixed time constant), the acceleration/deceleration becomes more gentle as the command speed becomes slower (the acceleration/deceleration time does not change).<br>(b) The time to achieve the commanded speed (G1tL) can be set independently for each axis. Note, however, that an arc shape will be distorted if the time constant differs among the base axes.<br><br>G1tL: G1 time constant linear<br>(MTB-specified parameter #2007) |
| **High-accuracy control mode** | 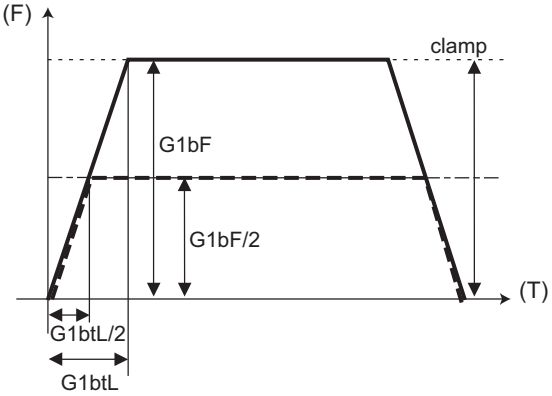 <br>(F) Resultant speed<br>(T) Time | (a) Because of the acceleration/deceleration that controls the acceleration time to achieve the maximum speed (G1bF) set by a parameter at a constant level (constant-gradient type linear acceleration/deceleration), the acceleration/deceleration time is reduced as the command speed becomes slower.<br>(b) Only one acceleration/deceleration time constant (common for each axis) exists in a system.<br><br>G1bF: Maximum speed<br>(MTB-specified parameter #1206)<br>G1btL: Time constant<br>(MTB-specified parameter #1207)<br><br><Note><br>•G1bF and G1btL are values for specifying the gradient of the acceleration/deceleration time. The actual cutting feed maximum speed is clamped by the "#2002 clamp" value. |

(2) Path control in circular interpolation commands

When commanding circular interpolation with the conventional "acceleration/deceleration after interpolation" control method, the path itself that is output from the NC to the servo runs further inside the commanded path, and the circle radius becomes smaller than that of the commanded circle. This is due to the influence of the smoothing course droop amount for NC internal acceleration/deceleration.

With the pre-interpolation acceleration/deceleration control method, the path error is eliminated and a circular path faithful to the command results, because interpolation is carried out after the acceleration/deceleration control. Note that the tracking lag due to the position loop control in the servo system is not the target here.

The following shows a comparison of the circle radius reduction error amounts for the conventional "acceleration/deceleration after interpolation" control and pre-interpolation acceleration/deceleration control in the high-accuracy control mode.

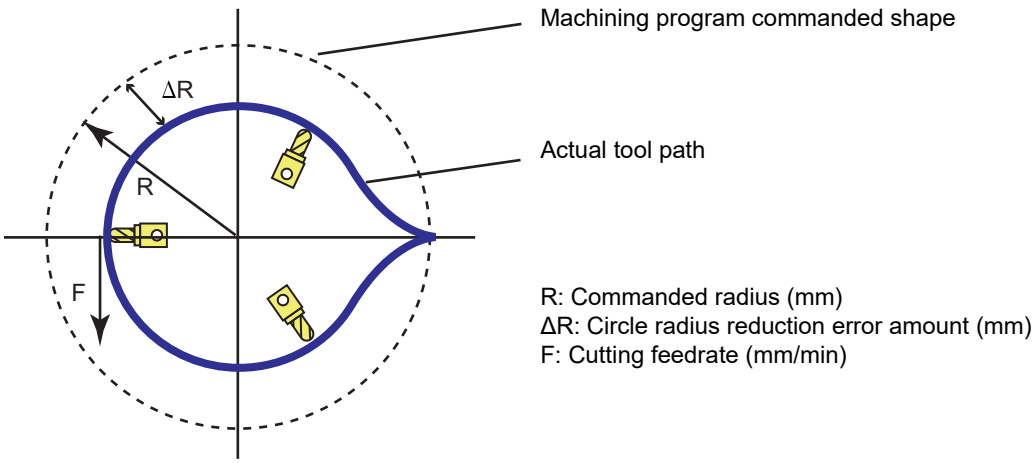


If an arc is commanded by a machining program as shown above, the error ΔR occurs for the commanded shape on the actual tool path. In the normal mode (acceleration/deceleration after interpolation), ΔR is caused by acceleration/deceleration of NC and lag of servo system. High-accuracy control (acceleration/deceleration before interpolation), however, can eliminate errors caused by acceleration/deceleration of NC. By additionally using the feed forward control, it is also possible to reduce errors caused by lag of servo system.

The compensation amount of the circle radius reduction error (ΔR) is theoretically calculated as shown in the following table.

| **"Acceleration/deceleration after interpolation" control (normal mode)** | **"Pre-interpolation acceleration/deceleration" control (high-accuracy control mode)** |
|---|---|
| Linear acceleration/deceleration<br>$\Delta R = \frac{1}{2R}\left(\frac{1}{12}Ts^2 + Tp^2\right)\left(\frac{F}{60}\right)^2$<br>Exponential function acceleration/deceleration<br>$\Delta R = \frac{1}{2R}\left(Ts^2 + Tp^2\right)\left(\frac{F}{60}\right)^2$ | Linear acceleration/deceleration<br>$\Delta R = \frac{1}{2R}\left\{Tp^2\left(1 - Kf^2\right)\right\}\left(\frac{F}{60}\right)^2$<br>(a) Because the item Ts can be ignored by using the pre-interpolation acceleration/deceleration control method, the radius reduction error amount can be reduced.<br>(b) Item Tp can be negated by making Kf = 1. |

Ts: Acceleration/deceleration time constant in the NC (s)
Tp: Servo system position loop time constant (s) (inverse number to "#2203 PGN1")
Kf: Feed forward coefficient
Kf = fwd_g / 1000 (fwd_g: #2010 Feed forward gain)

### Rapid traverse pre-interpolation acceleration/deceleration

When "#1205 G0bdcc" (G0 pre-interpolation acceleration/deceleration) is "1", pre-interpolation acceleration/deceleration is also enabled for rapid traverse movement. In this case, acceleration/deceleration control is performed so that the acceleration rate of each axis does not exceed the gradient determined by parameters "#2001 rapid" (rapid traverse rate) and "#2004 G0tL" (G0 time constant (linear)).

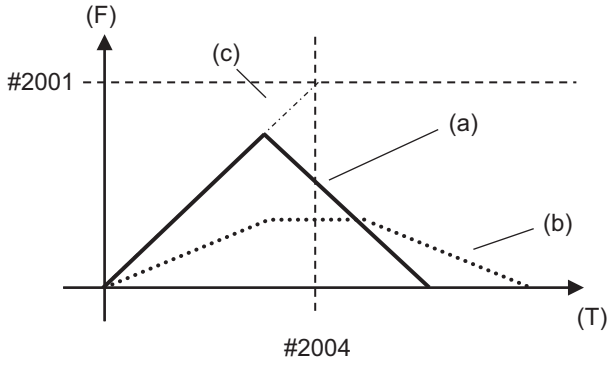


(a) Velocity waveform of pre-interpolation acceleration/deceleration

(b) Velocity waveform of acceleration/deceleration after interpolation

(c) Gradient of pre-interpolation acceleration/deceleration

(F) Speed

(T) Time

When the gradient of each axis is different, the most moderate gradient among them is used in pre-interpolation acceleration/deceleration.
Because acceleration/deceleration control is performed with a constant gradient, the positioning time for a G00 fine-segment block is reduced.

#### Note

(1) When "#1086 G0Intp" (G00 non-interpolation) is "1", acceleration/deceleration after interpolation is applied to G00.

(2) When "#8090 SSS ON" is "1", pre-interpolation acceleration/deceleration is applied to G00 regardless of the setting in "#1205 G0bdcc" (Acceleration and deceleration before G0 interpolation).

(3) When "#1569 SfiltG0" (G00 soft acceleration/deceleration filter) is set to a value other than "0", cycle time may become longer when pre-interpolation acceleration/deceleration is applied to linear acceleration/deceleration than when acceleration/deceleration after interpolation is applied.

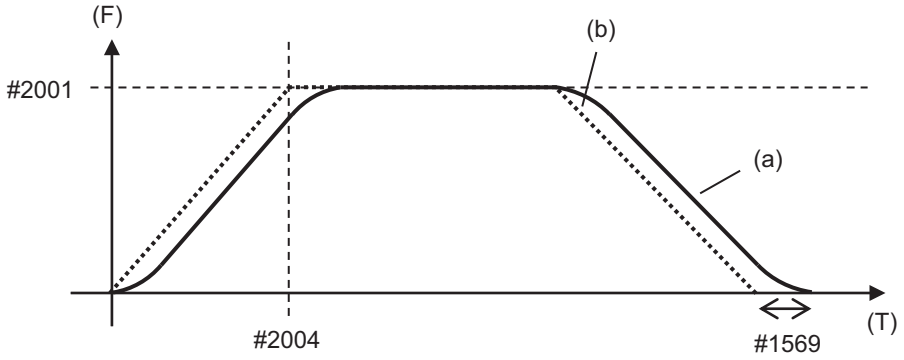


(a) Velocity waveform of pre-interpolation acceleration/deceleration

(b) Velocity waveform of acceleration/deceleration after interpolation

(F) Speed

(T) Time

## Optimum speed control

When the moving direction is changed on the corner, arc, etc., acceleration rate corresponding to the amount of change and the feedrate is generated. When the acceleration rate is large, there is a possibility of machine vibration and it may leave stripes on the machining surface.
In the high-accuracy control mode, the deceleration control (optimum speed control) is performed to keep the generated acceleration rate under the allowance that has been designed with the parameter so that the problem mentioned above can be solved. The optimum speed control suppresses the machine vibration and enables highly accurate machining while minimizing the extension of cycle time.

Corner deceleration
: Consists of optimum corner deceleration and axis-specific acceleration tolerance control.

Arc speed clamp
: Controls deceleration so that the combined acceleration rate on an arc is kept below the tolerable acceleration rate common to all axes. This can suppress path errors (circle radius reduction error amount) on an arc to a certain level.

(1) Optimum corner deceleration

Highly accurate edge machining can be achieved by controlling deceleration so that the combined acceleration rate at the seam between blocks is kept under the tolerable acceleration rate common to all axes, which is determined by "#1206 G1bF" (maximum speed), "#1207 G1btL" (time constant), and accuracy coefficient. When entering in a corner, optimum speed for the corner (optimum corner speed) is calculated from the angle with the next block (corner angle) and the tolerable acceleration rate common to all axes. The machine decelerates to the speed in advance, and then accelerates back to the command speed after passing the corner.

| | |
|---|---|
| 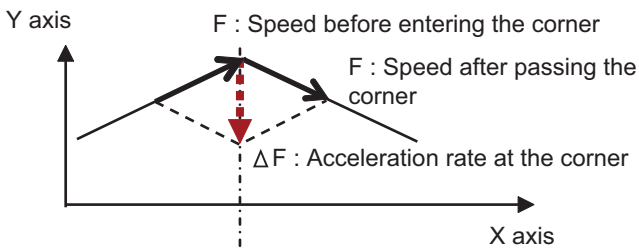 | When a corner with the corner angle θ is passed at speed F, the acceleration rate ΔF occurs according to θ and F. |
| 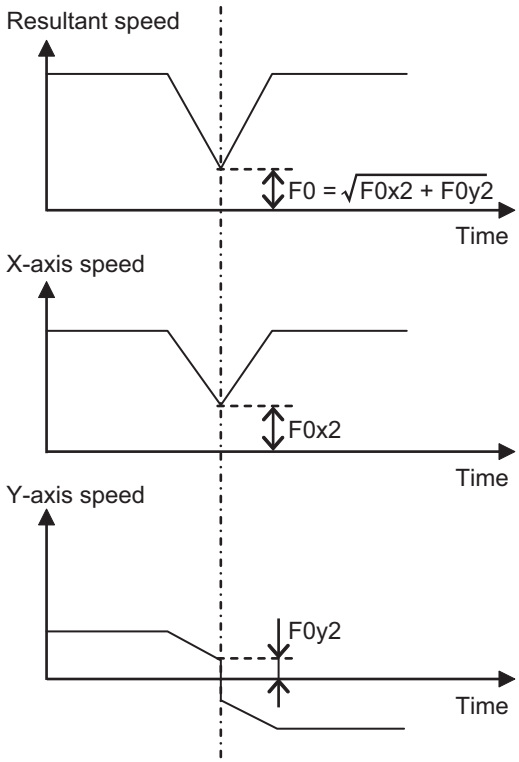 | The corner speed F is controlled so that ΔF generated above does not exceed the tolerable acceleration rate common to all axes.<br>The speed pattern is as shown on the left. |

Optimum corner deceleration is not carried out when blocks are smoothly connected, because deceleration is not necessary. The criteria for whether the connection is smooth or not can be designated by the machining parameter "#8020 DCC ANGLE". If the corner angle is equal to or less than the corner deceleration angle, the connection is judged to be smooth and optimum corner deceleration is not carried out.
The edge accuracy can be further improved by setting a greater accuracy coefficient. A greater accuracy coefficient, however, reduces the optimum corner speed, which may increase the cycle time. Setting a negative accuracy coefficient can increase the optimum corner speed and reduce the cycle time.
As shown below, different accuracy coefficients can be used depending on the parameter "#8021 COMP_CHANGE", and the tolerable acceleration rate common to all axes can be obtained with the following formula:

| #8021 COMP CHANGE | Accuracy coefficient used |
|---|---|
| 0 | #8019 R COMP |
| 1 | #8022 CORNER COMP |

$$\text{Tolerable acceleration rate for all axes (mm/s}^2\text{)} = \frac{\text{G1bF (mm/min) / 60}}{\text{G1btL (ms) / 1000}} \times \frac{\text{100 - R COMP}}{\text{100}}$$

The corner speed V0 can be maintained at more than a certain speed so that the corner speed does not drop too far.
Set "#2096 crncsp (corner deceleration minimum speed)" for each axis, and make a resultant speed so that the moving axis does not exceed this setting.

**Speed is not clamped**

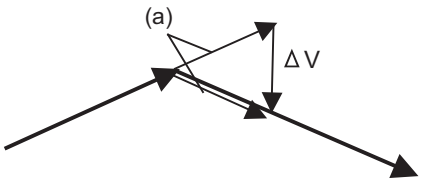


**Speed is clamped**

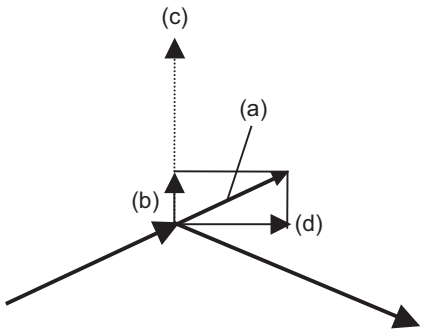


(a) Corner deceleration speed
(b) Clamp value according to X axis
(c) Y axis setting value
(d) X axis setting value

Note that the speed is controlled with the optimum corner deceleration speed in the following cases.

- When the combined corner deceleration speed is equal to or less than the optimum corner deceleration speed
- When the corner deceleration minimum speed parameter setting for the moving axes is set to "0" for even one axis.

(2) Axis-specific acceleration tolerance control (optimum acceleration control)

The acceleration rate to be generated at a seem between blocks is evaluated for each axis to control deceleration so that the seam is passed at the optimum speed. This enables highly accurate edge machining.

The optimum deceleration speed is calculated so that the acceleration rate of each axis to be generated at the seam is equal to or less than the tolerable acceleration rate for each axis, which is determined by "#2157 G1bFx" (maximum speed for each axis), "#2158 G1btLx" (time constant for each axis), and the accuracy coefficient. The machine decelerates to the speed in advance, and then accelerates back to the command speed after passing the corner.

This control enables deceleration at an appropriate speed for the characteristics of each axis even when machine vibrations may easily occur due to a low tolerable acceleration rate for a specific axis (rotary axis). This means that the deceleration speed can be raised at a corner where acceleration rate is generated only for an axis with a high tolerable acceleration rate, leading to a reduced cycle time.

If acceleration rate is generated for the X axis (linear axis) as shown in Figure (a) below or for the C axis (rotary axis) as shown in Figure (b), the corner speed F is controlled so that the acceleration rate to be generated at the X or C axis does not exceed the tolerable acceleration rate for the X or C axis, respectively. If the tolerable acceleration rate for the X axis is higher than that for the C axis, a higher deceleration speed can be used for a path where acceleration rate is generated only for the X axis than where acceleration rate is generated only for the C axis. In this case, the speed patterns are as shown in Figures (c) and (d) below:

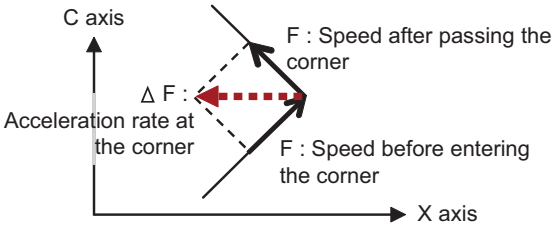


(a) Corner shape which generates the acceleration rate on X axis (linear axis)

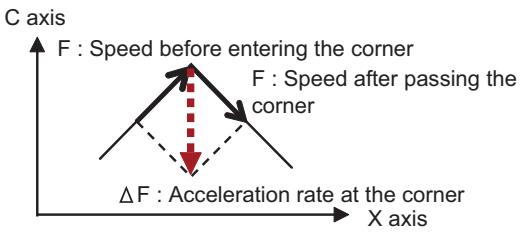


(b) Corner shape which generates the acceleration rate on C axis (rotary axis)

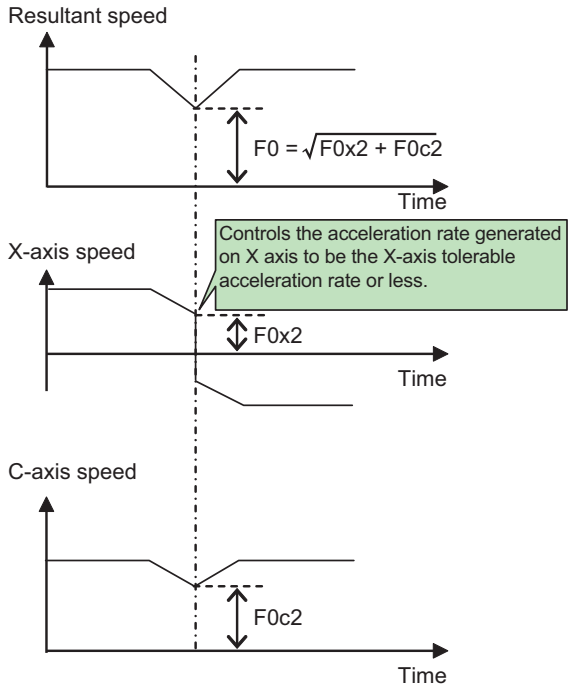


(c) Speed pattern which generates the acceleration rate on X axis (linear axis)

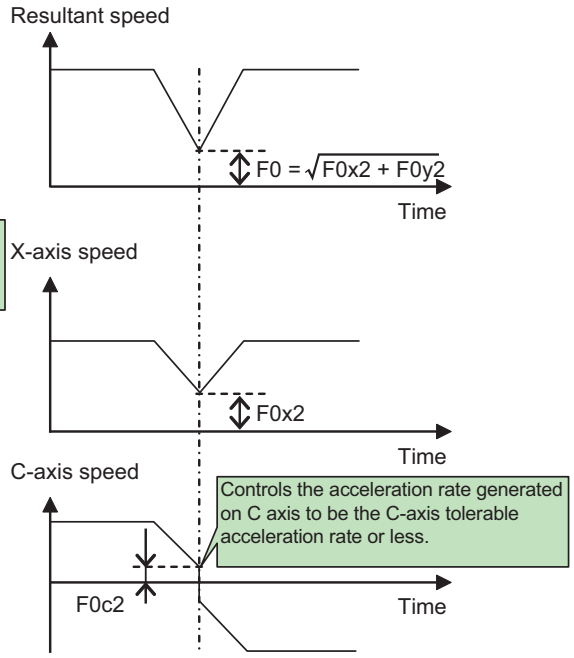


(d) Speed pattern which generates the acceleration rate on C axis (rotary axis)

Deceleration is not carried out when blocks are smoothly connected (when the acceleration rate to be generated for each axis is equal to or lower than the tolerable acceleration rate for each axis).
The edge accuracy can be further improved by setting a greater accuracy coefficient. A greater accuracy coefficient, however, reduces the optimum corner speed, which may increase the cycle time. Setting a negative accuracy coefficient can increase the optimum corner speed and reduce the cycle time.
As shown below, different accuracy coefficients can be used depending on the parameter "#8021 COMP_CHANGE". Also, the tolerable acceleration rate can be adjusted for each axis using "#2159 compx" (accuracy coefficient for each axis), and the tolerable acceleration rate for each axis can be obtained with the following formula. It is necessary, however, to set the same tolerable acceleration rate for all base axes because an arc shape is distorted if it differs among them. If G1bFx is "0" (not set), the tolerable acceleration rate is calculated using "#2001 rapid" (rapid traverse rate). And if G1btLx is "0" (not set), the tolerable acceleration rate is calculated using "#2004 G0tL" (G0 time constant (linear)).
If G1bFx and G1btLx are 0 for all base axes, the tolerable acceleration rate for the base axes are unified to the lowest one.

| #8021 COMP CHANGE | Accuracy coefficient used |
|---|---|
| 0 | #8019 R COMP |
| 1 | #8022 CORNER COMP |

$$\text{Tolerable acceleration rate for each axes (mm/s}^2\text{)} = \frac{\text{G1bFx (mm/min) / 60}}{\text{G1btLx (ms) / 1000}} \times \frac{\text{100 - R COMP}}{100} \times \frac{\text{100 - compx}}{100}$$

(3) Arc speed clamp

During circular interpolation, even when moving at a constant speed, acceleration rate is generated as the advance direction constantly changes. When the arc radius is large enough in relation to the commanded speed, control is carried out at the commanded speed. However, when the arc radius is relatively small, the speed is clamped so that the generated acceleration rate does not exceed the tolerable acceleration/deceleration speed before interpolation, calculated with the parameters.

This allows arc cutting to be carried out at an optimum speed for the arc radius.

The figure below shows the acceleration rate ΔF (mm/s$^2$) for movement at the constant speed F (mm/min) on an arc shape with the radius R (mm). Here, the arc clamp speed F' (mm/min) that makes the acceleration rate ΔF lower than the tolerable acceleration rate common to all axes Ac (mm/s$^2$) can be obtained with the following formula:

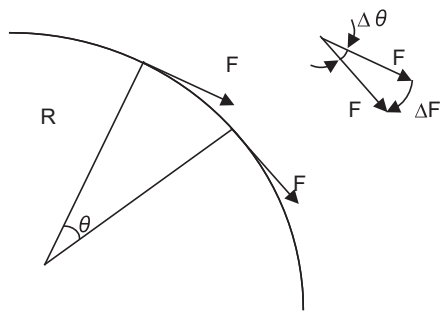


F: Commanded speed (mm/min)
R: Commanded arc radius (mm)
Δθ: Angle change per interpolation unit
ΔF: Speed change per interpolation unit

The tool is fed with the arc clamp speed F' so that ΔF does not exceed the tolerable acceleration rate common to all axes Ac (mm/s$^2$).

$$F' \leqq \sqrt{R*Ac*60}$$

$$\Delta F' = \frac{G1bF(mm/min)}{G1btL(ms)}$$

When the above F' expression is substituted with F in the expression for the maximum logical arc radius reduction error amount ΔR, explained in the section "Pre-interpolation acceleration/deceleration", the commanded radius R is eliminated, and ΔR does not rely on R.
Here, Tp is the servo system position loop time constant (s) and Kf is the feed forward coefficient.
Tp is the inverse number to "#2203 PGN1" (position loop gain) (Tp = 1 / PGN1) and Kf is a ratio of "#2010 fws_g" (feed forward gain) (Kf = fwd_g / 100), both of which depend on the MTB specifications.

$$\Delta R = \frac{1}{2R}\left\{Tp^2\left(1 - Kf^2\right)\right\}\left(\frac{F}{60}\right)^2$$

$$= \frac{AC}{2}\left\{Tp^2\left(1 - Kf^2\right)\right\}$$

ΔR : Arc radius reduction error amount
Tp : Position loop gain time constant of servo system
Kf : Feed forward coefficient
F : Cutting feedrate

In other words, with an arc command to be clamped at the arc clamp speed, in logical terms regardless of the commanded radius R, machining can be carried out with a radius reduction error amount within a constant value. The roundness can be further improved by setting a greater accuracy coefficient. A greater accuracy coefficient, however, reduces the arc clamp speed, which may increase the cycle time. Setting a negative accuracy coefficient can increase the arc clamp speed and reduce the cycle time.
As shown below, different accuracy coefficients can be used depending on the parameter "#8021 COMP_CHANGE", and the tolerable acceleration rate common to all axes can be obtained with the following formula:

| #8021 COMP CHANGE | Accuracy coefficient used |
|---|---|
| 0 | #8019 R COMP |
| 1 | #8022 CORNER COMP<br>#8023 CURVE COMP |

$$\text{Tolerable acceleration rate for all axes (mm/s}^2\text{)} = \frac{G1bF\ (mm/min)\ /\ 60}{G1btL\ (ms)\ /\ 1000} \times \frac{100 - R\ COMP}{100}$$

### Vector accuracy interpolation

When a fine segment is commanded and the angle between the blocks is extremely small (when not using optimum corner deceleration), interpolation can be carried out more smoothly using the vector accuracy interpolation.

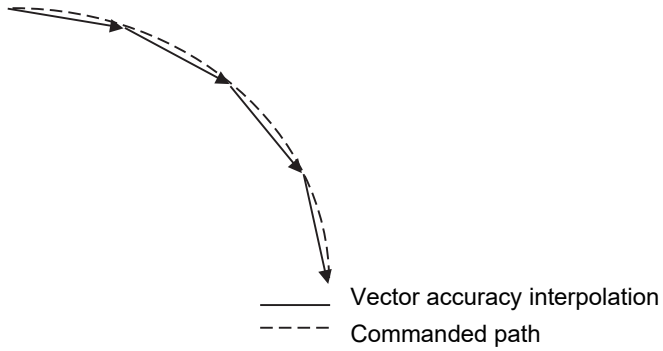


### Feed forward control

This function reduces path errors caused by delay of servo systems. Path errors caused by acceleration/deceleration of NC can be eliminated by acceleration/deceleration before interpolation, however errors caused by delay of servo systems cannot be eliminated by acceleration/deceleration before interpolation. Therefore, when the arc shape of radius R (mm) is machined at speed F (mm/min) as the figure (a)below, for instance, the lag time occurs between the NC commanded speed and the actual tool speed in amount of the servo system time constant and the path error ΔR (mm) occurs. Feed forward control generates the command value taking the delay of servo systems as shown in figure (b)below so that the path error caused by delay of servo systems can be inhibited.

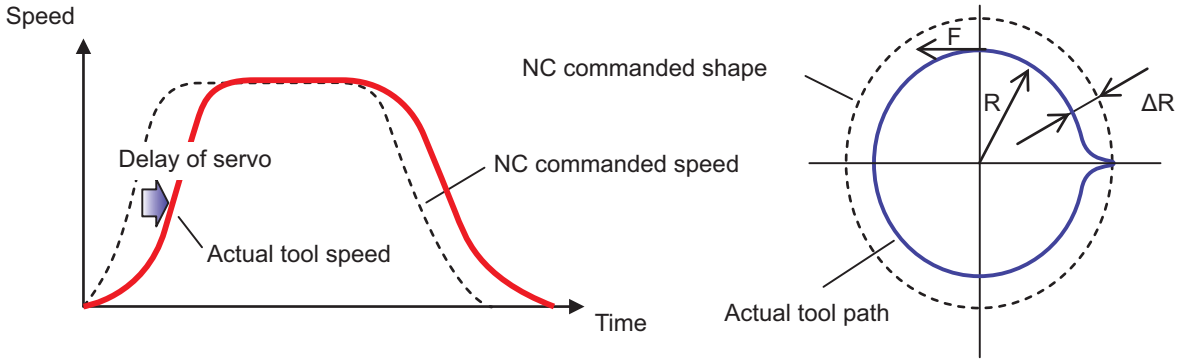


(a) NC command and actual tool movement during Feed forward control OFF

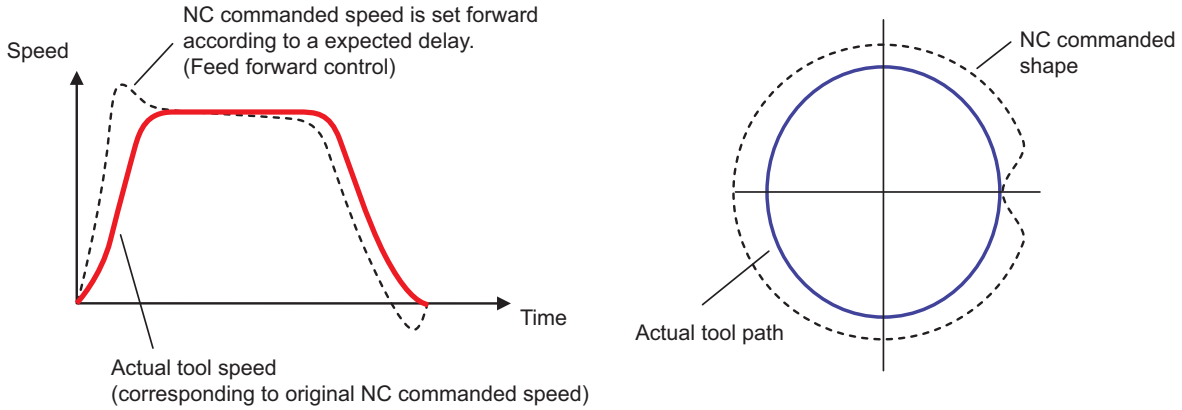

(b) NC command and actual tool movement during Feed forward control ON

$$\Delta R = \frac{1}{2R}\left\{Tp^2\left(1 - Kf^2\right)\right\}\left(\frac{F}{60}\right)^2$$

Here, Tp is the servo system position loop time constant (s) and Kf is the feed forward coefficient. Tp is the inverse number to "#2203 PGN1" (position loop gain) (Tp = 1 / PGN1) and Kf is a ratio of "#2010 fws_g" (feed forward gain) (Kf = fwd_g / 100), both of which depend on the MTB specifications.

**Combination with the smooth high gain (SHG) control function**

Feed forward control can inhibit path errors more effectively by increasing the feed forward coefficient. In some cases, however, the coefficient cannot be increased because a greater coefficient may cause machine vibrations. In this case, use this function together with the smooth high gain (SHG) control function to stably compensate path errors caused by lag of servo system.
To enable the SHG control, it is also necessary to set "#2204 PGN2" (position loop gain 2) and "#2257 SHGC SHG" (control gain) in addition to "#2203 PGN1" (position loop gain 1), all of which depend on the MTB specifications. By enabling the SHG control, it is possible to inhibit path errors, for example, for an arc shape equivalently as with conventional control (SHG control OFF) using the equivalent feed forward gain fwd_g as shown in the following formula. This means that setting fwd_g = 50 (%) for the SHG control is as effective as setting fwd_g = 100 (%) for conventional control in inhibiting path errors.

$$fwd_g' = 100\sqrt{1 - \left\{1 - \left(\frac{fwd_g}{100}\right)^2\right\}\left(\frac{1}{2}\right)}$$

## S-pattern filter control

S-pattern filter (soft acceleration/deceleration filter) is the function that inhibits the machine vibration by smoothing a velocity waveform. There are following types of S-pattern filters:

- G01/G00 S-pattern filter
- G01/G00 jerk filter
- S-pattern filter 2

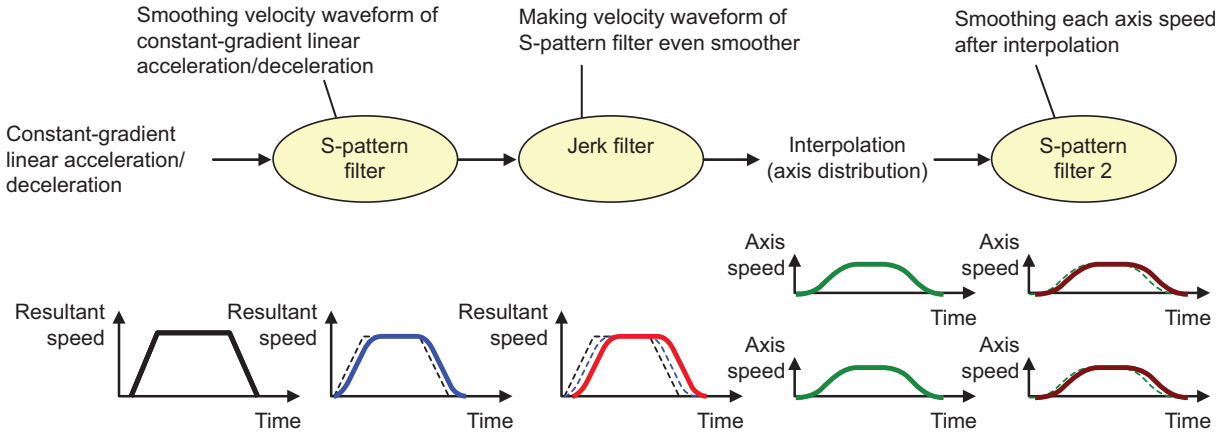


(1) G01/G00 S-pattern filter

This function inhibits the machine vibration by smoothing a velocity waveform generated by constant-gradient linear acceleration/deceleration.
Constant-gradient linear acceleration/deceleration generates continuous velocity waveforms, but makes the acceleration rate discontinuous. As a result, machine vibrations may easily occur when there are discontinuities in acceleration rate, which may cause scratches or streaks on the machining surface. The S-pattern filter can make the velocity waveform even smoother and eliminate acceleration rate discontinuities to inhibit machine vibrations. The S-pattern filter does not impair machining accuracy because it makes the combined speed smoother before interpolation. A greater S-pattern filter time constant, however, may increases the cycle time.
To the S-pattern filter time constant, "#1568 SfiltG1" is applied during cutting feed (G01) or "#1569 SfiltG0" during rapid traverse (G00), each of which can be set in the range of 0 to 200 (ms).

(2) G01/G00 jerk filter

The jerk filter function inhibits machine vibrations by eliminating jerk discontinuities when the S-pattern filter alone cannot inhibit such vibrations.
Through the S-pattern filter, continuous velocity waveforms can be obtained up to acceleration rate, but jerk discontinuities remain. The jerk filter further filters the velocity waveform smoothed by the S-pattern filter to smooth jerk as well to inhibit machine vibrations. The jerk filter does not impair machining accuracy because it makes the combined speed smoother before interpolation.
To the jerk filter time constant, "#12051 Jerk_filtG1" is applied during cutting feed (G01) or "#12052 Jerk_filtG0" during rapid traverse (G00), each of which can be set in the range of 0 to 50 (ms). Even if a jerk filter time constant is set, the S-pattern filter time constant is the time to achieve the target acceleration rate. As a result, the time constant for S-pattern filter processing is "S-pattern filter time constant" - "Jerk filter time constant". If the jerk filter time constant is the same as or greater than the S-pattern filter time constant, an MCP alarm (Y51 0030) will occur.

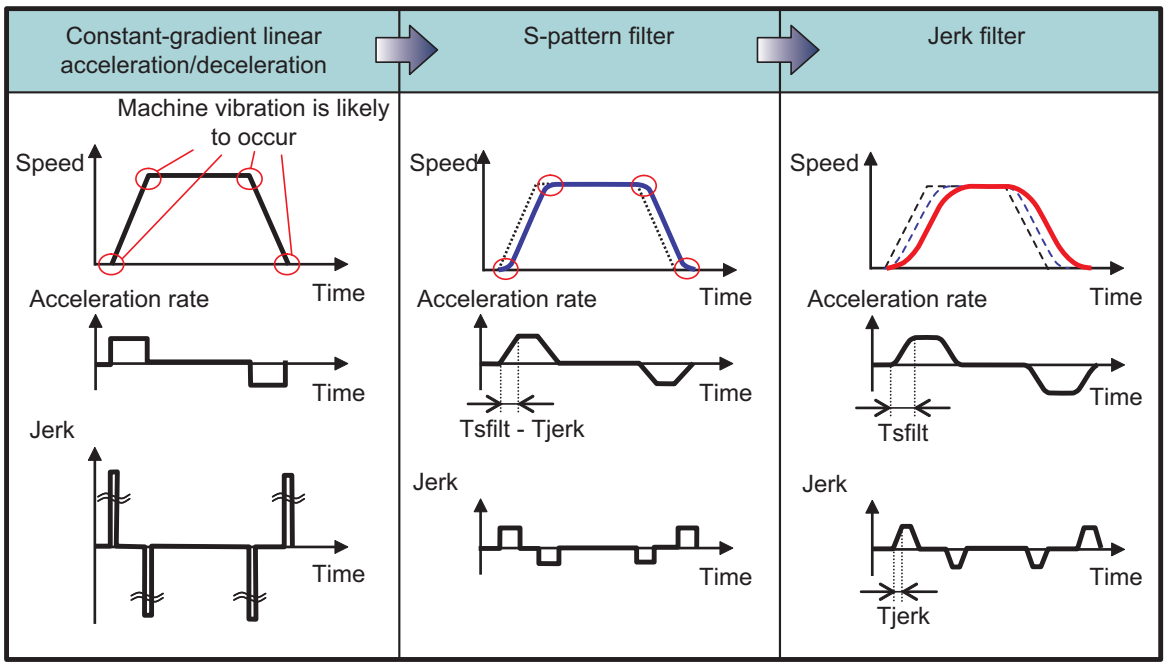


Tsfilt: S-pattern filter time constant

Tjerk: Jerk filter time constant

(3) S-pattern filter 2

This function inhibits machine vibrations by smoothing slight speed fluctuation caused when the combined speed is distributed to each axis element.
S-pattern filter 2 can inhibit machine vibrations by smoothing slight speed fluctuation on each axis. The function, however, may impair machining accuracy because it filters each axis speed after interpolation. A greater S-pattern filter 2 time constant, however, may increases the cycle time.
To the S-pattern filter 2 time constant, "#1570 Sfilt2" is applied, which can be set in the range of 0 to 200 (ms).

(4) How to adjust parameters

(a) The table below shows typical initial values for each filter time constant. If your machine's natural angular frequency fn (Hz) is known, vibrations can be inhibited effectively by setting the vibration period Tn (ms) obtained with the following formula for the S-pattern filter time constant:

$$Tn = \frac{1000}{fn} \text{ (ms)}$$

| S-pattern filter (SfiltG1/SfiltG0) | Jerk filter (Jerk_filtG1/Jerk_filtG0) | S-pattern filter (Sfilt2) |
|---|---|---|
| 50ms | 0ms | 10ms |

(b) If vibrations cannot be inhibited properly with the above initial values, increase the S-pattern filter time constant. Or, decrease the S-pattern filter time constant to reduce the cycle time.

(c) If vibrations occur at a corner or other section and stripes remain on the machining surface even after the S-pattern filter time constant is increased, increase the S-pattern filter 2 time constant. The maximum S-pattern filter 2 time constant, however, should be 20 to 25 ms because a greater S-pattern filter 2 time constant may impair machining accuracy.

(d) If high-frequency machine vibrations remain even after the S-pattern filter/S-pattern filter 2 are applied, set the jerk filter time constant.

If a shorter cycle time has a priority over the machining accuracy, it is possible to inhibit vibrations at a corner by reducing the corner accuracy coefficient to increase the corner deceleration speed and increasing the S-pattern filter 2 time constant.

## Relationship with other functions

(1) The modal must be set as shown below when commanding G08 P1/G61.1.

| Function | G code |
|---|---|
| Cylindrical interpolation cancel (*1) | G07.1 |
| Polar coordinate interpolation cancel (*1) | G15 |
| Mirror image with settings | Cancel |
| Mirror image with signals | Cancel |
| No macro modal call | G67 |
| Feed per revolution cancel | G94 |
| Constant surface speed control mode cancel | G97 |
| Interruption type macro mode cancel | M97 |

(*1) These functions can be commanded if the axis-specific acceleration tolerance control (optimum acceleration control) specification is valid.

(2) A program error will occur if high-accuracy control is commanded in the following modes.
- During milling -> Program error (P481)
- During cylindrical interpolation -> Program error (P481) (*2)
- During polar coordinate interpolation -> Program error (P481) (*2)

(3) A program error (P29) will occur if the following commands are issued during the high-accuracy control mode.
- Milling
- Cylindrical interpolation (*2)
- Polar coordinate interpolation (*2)

(*2) An error will not occur if the axis-specific acceleration tolerance control (optimum acceleration control) specification is valid.

(4) High-accuracy control is temporarily disabled in the following modals:
- During a thread cutting cycle
- Tool spindle synchronization IC (Spindle-NC axis, Polygon)
- Tool spindle synchronization II (Hobbing)
- Balance cut

### Inclined axis control

The acceleration rate to be used in high-accuracy control is determined by the values set for parameters "#1206 G1bF" and "#1207 G1btL" (depending on the MTB specifications). However, this acceleration rate is based on the program coordinates (orthogonal coordinates: X-y coordinates). This means that, if inclined axis control is enabled, the acceleration of the actual axes (base/inclined axes: X-Y axes) exceeds the acceleration rate determined by #1206 and #1207. Therefore, #1206 and #1207 must be set by taking the mechanically allowable acceleration rate of the actual axes into consideration.

The following shows the relationship between acceleration rate (ΔV) in an orthogonal coordinate system and that of the actual axes (ΔVx/ΔVy).
For #1206 and #1207, set values determined by taking "ΔV*(1/cosθ)" into consideration.

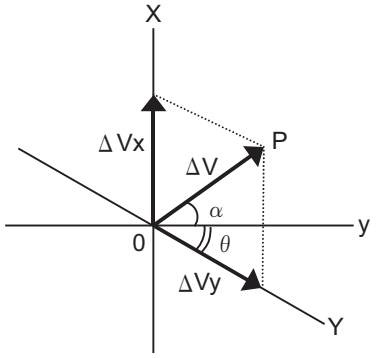


| | |
|---|---|
| X: | Actual X axis |
| Y: | Actual Y axis |
| y: | Virtual Y (program coordinates (orthogonal coordinates)) |
| θ: | Angle of inclination |
| ΔV: | Acceleration rate determined by "#1206 G1bF" and "#1207 G1btL" |
| ΔVx: | Acceleration rate of the actual X axis |
| ΔVy: | Acceleration rate of the actual Y axis |
| ΔVx = ΔV*sin(θ + α) / cosθ | |
| ΔVy = ΔV*cosα / cosθ | |

As suggested by the above equations, the maximum acceleration rate of the actual X axis (ΔVx) and the maximum acceleration rate of the actual Y axis (ΔVy) respectively take the maximum value when the following equations are true:

(ΔVx): sin(θ+α)=|1|

(ΔVy): cosα=|1|

(Example) When parameter values set on program coordinates (orthogonal coordinates) are used in inclined axis control at an angle of inclination of 60 degrees, the acceleration rate will be set as follows.

Setting values on orthogonal coordinates: #1206 =10000, #1207= 100
Acceleration rate on orthogonal coordinates (ΔV) = "#1206 G1bF" / "#1207 G1btL"
Maximum acceleration rate of the actual axes (ΔVx or ΔVy) = ΔV*(1/cos60) = 2*ΔV

The actual acceleration rate is twice as much as the setting value.

By using either of the following means, you can prevent the acceleration rate of the actual axes from exceeding the original setting values (acceleration rate on the orthogonal coordinates):

(1) Reduce the setting value for "#1206 G1bF".

#1206 = 5000, #1207 = 100

(2) Increase the setting value for "#1207 G1btL".

#1206 = 10000, #1207 = 200

### Arbitrary axis exchange/mixed control (cross axis control)

A program error (P126) will occur if the arbitrary axis exchange command is issued during high-accuracy control. However, the high-accuracy control command can be issued after arbitrary axis exchange is carried out. Furthermore, the mixed control command can be issued during high-accuracy control, and the high-accuracy control command can be issued during mixed control.

### Synchronous control/control axis synchronization between part systems

High-accuracy control can be commanded during synchronous control or control axis synchronization between part systems. Control axis synchronization between part systems can also be commanded during high-accuracy control. However, deceleration stop is applied to part systems that contain axes subjected to the control axis synchronization between part systems.

### Sub part system control

High-accuracy control can be commanded for part systems that have been called by sub part system control. However, high-accuracy control must be commanded from a sub part system because sub part systems do not inherit the modal information of the calling part system.

### Control axis superimposition control

During control axis superimposition, high-accuracy control is temporarily disabled in part systems that contain a reference axis (an axis that is only moved by its own commands) and a superimposed axis (an axis that is moved by both its own commands and commands from the reference axis). Therefore, when the Z2 axis (2nd part system) is superimposed on the Z1 axis (1st part system) as shown in the following example, the high-accuracy control of both the 1st and 2nd part systems is temporarily disabled during superimposition control.

| [1st part system] | [2nd part system] | Operation |
|---|---|---|
| :<br>! L1; | :<br>! L1; | |
| G126 Z2=Z1; | : | The Z2 axis is superimposed on the Z1 axis. |
| ! L2; | ! L2; | High-accuracy control of both the 1st and 2nd part systems is temporarily disabled when superimposition is being carried out. |
| X4. Z4.; | Z60.; | |
| : | : | |
| ! L3; | ! L3; | |
| G126 Z2; | G126 Z2; | Ends superimposition of Z2 axis |
| ! L4 | ! L4 | |

### Operation when high-accuracy control-related G commands are combined

The table below shows operations when following high-accuracy control-related commands are combined:

G61.1, G8P1 : High-accuracy control
G64 : Cutting mode
G61 : Exact stop check mode
G62 : Automatic corner override
G63 : Tapping mode
G08P0 : High-accuracy control cancel (cutting mode)
G05.1Q1 : High-speed high-accuracy control I
G05P2 : High-speed machining mode II
G05P10000 : High-speed high-accuracy control II

| A | B | Operation when B is commanded during A command |
|---|---|---|
| G61.1/G08P1 | G61.1 | Continues high-accuracy control. |
| | G61,G62,G63,G64 | Cancels high-accuracy control and operates in the commanded mode. |
| | G8P1 | Continues high-accuracy control. |
| | G8P0 | Cancels high-accuracy control. (Changes G code group 13 to G64.) |
| | G05.1Q1 | Operates in the high-speed high-accuracy control I mode. |
| | G05P2 | Operates in high-accuracy control + high-speed machining mode II. |
| | G05P10000 | Operates in the high-speed high-accuracy control II mode. |
| G61.2 | G61.1 | Operates in the high-accuracy control mode. |
| | G61,G62,G63,G64 | Operates in the commanded mode. |
| | G08P1 | Operates in the high-accuracy control mode. |
| | G08P0 | A program error (P29) will occur. |
| | G05.1Q1 | A program error (P29) will occur. |
| | G05P10000 | A program error (P29) will occur. |
| G05.1Q1 | G61.1 | Continues the high-speed high-accuracy control I mode. |
| | G64 | Continues the high-speed high-accuracy control I mode. |
| | G61,G62,G63 | Operates in the high-speed high-accuracy control I + commanded mode. |
| | G08P1 | Continues the high-speed high-accuracy control I mode. |
| | G08P0 | Continues the high-speed high-accuracy control I mode. |
| | G05.1Q1 | Continues the high-speed high-accuracy control I mode. |
| | G05P2 | Operates in the high-speed machining mode II. |
| | G05P10000 | A program error (P34) will occur. |
| G05P10000 | G61.1 | Continues the high-speed high-accuracy control II mode. |
| | G64 | Continues the high-speed high-accuracy control II mode. |
| | G61,G62,G63 | Operates in the high-speed high-accuracy control II + commanded mode. |
| | G08P1 | Continues the high-speed high-accuracy control II mode. |
| | G08P0 | Continues the high-speed high-accuracy control II mode. |
| | G05.1Q1 | A program error (P34) will occur. |
| | G05P2 | Operates in the high-speed machining mode II. |
| | G05P10000 | Continues the high-speed high-accuracy control II mode. |

### Rapid acceleration rate switching during inclined surface machining command

The acceleration rate of either the cutting feed (G01) or rapid traverse (G00) can be used for the rapid traverse (G00) in the high-accuracy control mode during the inclined surface machining command. Which acceleration rate is used depends on the MTB specifications (parameter "#1250 set22/bit3").

Normally, the acceleration rate of the cutting feed (G01) is used and the acceleration rate in the route direction becomes constant. If the acceleration rate of the rapid traverse (G00) is used, the acceleration rate can be changed to suit the responsiveness of the moving axis, and also the cycle time can be reduced compared to that of the cutting feed (G01) acceleration rate.

When at least one of the functions shown in the table below is commanded, positioning is performed with the acceleration rate of the rapid traverse (G00) in the following conditions:

(1) The parameter "#1250 set22/bit3" is set to "1".
(2) SSS control is being executed.

If the above conditions are not satisfied, the system runs with the acceleration rate of the cutting feed (G01).

| Function | Instruction (G code) |
|---|---|
| Inclined surface machining command | G68.2 |

The table below shows the rapid traverse acceleration/deceleration patterns and acceleration rate designation methods when the SSS control is enabled. The acceleration rate is calculated based on the designated parameters to perform operations. Designate the parameters to determine the rapid traverse acceleration rate, referring to the table below.

| #1250 bit3 | Function in the table above | Acceleration/deceleration pattern | Acceleration rate designation method |
|---|---|---|---|
| 0 | Not commanded. | Constant-gradient acceleration/deceleration | Designated with the parameters "#2001 Rapid" and "#2004 G0tL". |
| | Commanded. | Constant-gradient acceleration/deceleration | Designated with the parameters "#1206 G1bF" and "#1207 G1btL". |
| 1 | Not commanded. | Constant-gradient acceleration/deceleration | Designated with the parameters "#2001 Rapid" and "#2004 G0tL". |
| | Commanded. | Constant-gradient acceleration/deceleration | Designated with the parameters "#2001 Rapid" and "#2004 G0tL". |

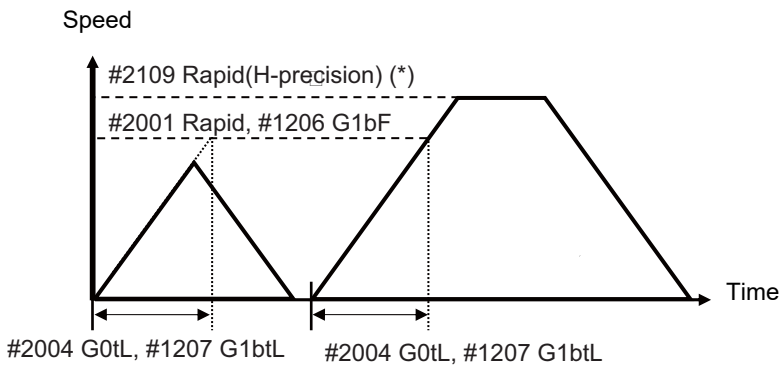


(*) When "#2109 Rapid(H-precision)" (rapid traverse rate for high-accuracy control mode) is set to "0", "#2001 rapid" is used.

## Precautions

(1) The "high-accuracy control" specifications are required to use this function
If G61.1 is commanded when there are no specifications, a program error (P123) will occur.

(2) "G08P1" or "G08P0" must be commanded alone in a block respectively.

(3) The high-accuracy control function is internally enabled by the high-speed high-accuracy I/II (G5.1Q1/ G5P10000) command. If the high-speed high-accuracy I/II is commanded in the high-accuracy control mode, the high-speed high-accuracy I/II mode is enabled. Then, if the high-speed high-accuracy I/II mode is canceled, the high-accuracy control mode is restored.

(4) In the high-accuracy control mode, feedrate command F is clamped with the "#2110 Clamp (H-precision)" (Cutting feed clamp speed for high-accuracy control mode) set with parameter. When the cutting feed clamp speed for the high-accuracy control mode is 0, however, it is clamped with the "#2002 clamp" cutting clamp speed set by the parameter.

(5) In the high-accuracy control mode, rapid traverse rate conforms to "#2109 Rapid(H-precision)" (Rapid traverse rate during high-accuracy control mode) set by the parameter. When the rapid traverse rate during the high-accuracy control mode is set to "0", however, the movement follows "#2001 rapid" set by the parameter.

(6) If the specifications for the multi-part system simultaneous high-accuracy control are not provided, the "#1205 G0bdcc" (G0 pre-interpolation) can be used with only one part system.
If the 2nd or later part system is set to the G0 pre-interpolation acceleration/deceleration, an MCP alarm (Y51 0017) will occur.

(7) When there are the high-accuracy control time constant expansion specifications, the sampling buffer area may be smaller.

(8) The high-accuracy control time constant expansion specifications can only be used for a 1-part system. In a multi-part system, the high-accuracy control time constant expansion specifications are disabled even when they are set to ON.

(9) For a part system where high-accuracy control is to be commanded, set the number of axes in the part system to 8 or less. If high-accuracy control is commanded for a part system that has 9 or more axes, an operation error (M01 0135) will occur. The error will not occur, however, if the number of axes in the part system excluding the master axis/slave axis is 8 or less during the synchronous control/control axis synchronization between part systems.

(10) Even if the parameter "#1210 RstGmd" (modal G code reset setting) is set to "not to initialize group 13 at reset", group 13 is initialized according to the setting of "#1148 I_G611" (Initial hi-precis) if it is enabled. To retain group 13 at reset, set "#1148 I_G611" to "0".
These parameters depend on the MTB specifications.

(11) If the parameter "#1205 G0bdcc" (G0 acceleration/deceleration before interpolation) is set to "1", the value set with the parameter "#2224 SV024" (in-position detection width) will be used as the in-position width. The setting of the parameter "#2077 G0inps" (G0 in-position width) and the programmable in-position check with ",I" address are disabled.

(12) When SSS is enabled, the feedrate is controlled so that it will be the optimum value based on the global path information. This means that the actual feedrate may be different from the speed commanded in the machining program.

(13) When the "Manual/Automatic simultaneous valid n-th axis" signal (Y920) is changed during the execution of the movement blocks for the pre-interpolation acceleration/deceleration, the change will not be enabled immediately even if the axis is not moving. The change is enabled when all the axes in the part system decelerate and stop.

## 17.2.2 SSS Control

### Function and purpose

Machining programs that approximate a freely curved surface with fine segments are run at high speed and with high-level accuracy. This function enables machining with less scratches and streaks on the cutting surface compared to the conventional high-accuracy control function.
With conventional high-accuracy control, the angle between two blocks is compared with the corner deceleration angle to determine whether to execute corner deceleration between the blocks. This can cause the speed to suddenly change between the blocks with an angle close to the corner deceleration angle, resulting in scratches or streaks.

The SSS (Super Smooth Surface) control uses information on not only the angle between two blocks but also global paths to provide optimum speed control that is not significantly affected by minute stepping or waviness. The favorable effects of this control include a reduction in the number of scratches or streaks on cutting surfaces.
The SSS control has the following features:

(1) This function is effective at machining smooth-shaped dies using a fine segment program.

(2) This function provides speed control that is not susceptible to errors in paths.

(3) Even if corner deceleration is not required, the speed is clamped if the predicted acceleration rate is high.
(The clamp speed can be adjusted using the parameter "#8092 ClampCoeff".)

The length of the path direction recognized with SSS control can be adjusted with the machining parameter "#8091 reference length". The range is increased as the setting value increases, and the effect of the error is reduced.
If the multi-part system simultaneous high-accuracy specification is provided, up to two part systems can be used at the same time.

**Note**

(1) The use of this function requires the following functions, in addition to the SSS control specifications. Make sure that these specifications are enabled before using this function.
High-accuracy control (G61.1/G08P1)
High-speed high-accuracy control I (G05.1 Q1)
High-speed high-accuracy control II (G05 P10000)

## Detailed description

When the parameters are set as below, each of the following high-accuracy control commands is activated under SSS control.

<Parameter>

"#8090 SSS ON" ON

<Command format of the modes activated under SSS control>"

| [High-accuracy control] | |
|---|---|
| G61.1 ; or G08P1;<br>G08P0; or, G command in group 13 except G61.1 | High-accuracy control ON<br>High-accuracy control OFF |

| [High-speed high-accuracy control I] | |
|---|---|
| G05.1 Q1 ;<br>G05.1 Q0 ; | High-speed high-accuracy control I ON<br>High-speed high-accuracy control I OFF |

| [High-speed high-accuracy control II] | |
|---|---|
| G05 P10000 ;<br>G05 P0 ; | High-speed high-accuracy control II ON<br>High-speed high-accuracy control II OFF |

"SSS" is displayed on the modal display screen under SSS control.
However "SSS" is not displayed when a command being executed is out of the scope of SSS control.

### Adjustment of accuracy coefficient

The clamp speed at a corner and arc can be adjusted using "#8022 CORNER COMP" and "#8023 CURVE COMP" (If "#8021 COMP_CHANGE" is set to "0", use "#8019 R COMP" to adjust the clamp speed at a corner and arc). When "#8096 Deceler. coeff. ON" is set to "1", "#8097 Corner decel coeff" and "#8098 Arc clamp spd coef" become valid during SSS control. Using these parameters, you can use different corner deceleration speeds and clamp speeds at arcs according to whether or not the SSS control is enabled.
For parameters #8097 and #8098, respectively, set a percentage ratio to the level of the relevant speed that is applied when the SSS control is disabled.

| Parameter | Item to be adjusted |
|---|---|
| #8097 Corner decel coeff | Corner deceleration speed to be applied when the SSS control is enabled |
| #8098 Arc clamp spd coef | Arc clamp speed to be applied when the SSS control is enabled |

(Example) When "#8097 Corner decel coeff" is set to 200 (%), the corner deceleration speed that is applied when the SSS control is enabled becomes twice the corner deceleration speed that is applied when the SSS control is disabled.

When setting the parameters, adjust the values within the range in which the machine does not vibrate.

### Parameter standard values

The standard values of the parameters related to SSS control are shown below.

(1) User parameters

| # | Item | Standard value |
|---|---|---|
| 8090 | SSS ON | 1 |
| 8091 | StdLength | 1.000 |
| 8092 | ClampCoeff | 1 |
| 8093 | StepLeng | 0.005 |
| 8094 | DccWaitAdd | 0 |
| 8096 | Deceler. coeff. ON | 1 |
| 8097 | Corner decel coeff | 300 |
| 8098 | Arc clamp spd coef | 100 |
| 8019 | R COMP | 0 |
| 8020 | DCC ANGLE | 10 |
| 8021 | COMP CHANGE | 1 |
| 8022 | CORNER COMP | 0 |
| 8023 | CURVE COMP | -20 |
| 8034 | AccClampt ON | 0 |
| 8036 | CordecJudge | 0 |
| 8037 | CorJudgeL | 0 |

<Note>

♦Reference items for adjusting the parameter

The relationship between each parameter, accuracy and speed is shown below.
The accuracy and speed required for machining can be adjusted with these settings.
When setting the parameters, adjust the values within the range in which the machine does not vibrate.

| Parameter | Adjustment target | Effect |
|---|---|---|
| #8022 CORNER COMP | Accuracy at corner section | Large setting = Accuracy increases, speed drops |
| #8023 CURVE COMP | Accuracy at curve section | Large setting = Accuracy increases, speed drops |
| #8092 ClampCoeff | Accuracy at curve section | Large setting = Accuracy drops, speed increases<br><Note><br>♦Usually use the standard value and adjust with "#8023". |

(2) Basic specification parameters (depend on the MTB specifications)

| # | Item | | Standard value |
|---|---|---|---|
| 1148 | I_G611 | Initial high-accuracy | 0 |
| 1205 | G0bdcc | G0 before interpolation | - |
| 1206 | G1bf | Acceleration/deceleration before interpolation Maximum speed | - |
| 1207 | G1btL | Acceleration/deceleration before interpolation Time constant | - |
| 1571 | SSSdis | SSS control adjustment coefficient fixed value selection | 0 |
| 1572 | Cirorp | Arc command overlap | 0 |
| 1568 | SfiltG1 | G1 soft acceleration/deceleration filter | 0 |
| 1569 | SfiltG0 | G0 soft acceleration/deceleration filter | 0 |
| 1570 | Sfilt2 | Soft acceleration/deceleration filter 2 | 0 |

(3) Axis specification parameters (depend on the MTB specifications)

| # | Item | | Standard value |
|---|---|---|---|
| 2010 | fwd_g | Feed forward gain | 70 |
| 2068 | G0fwdg | G00 feed forward gain | 70 |
| 2096 | crncsp | Minimum corner deceleration speed | 0 |

**SSS control parameter**

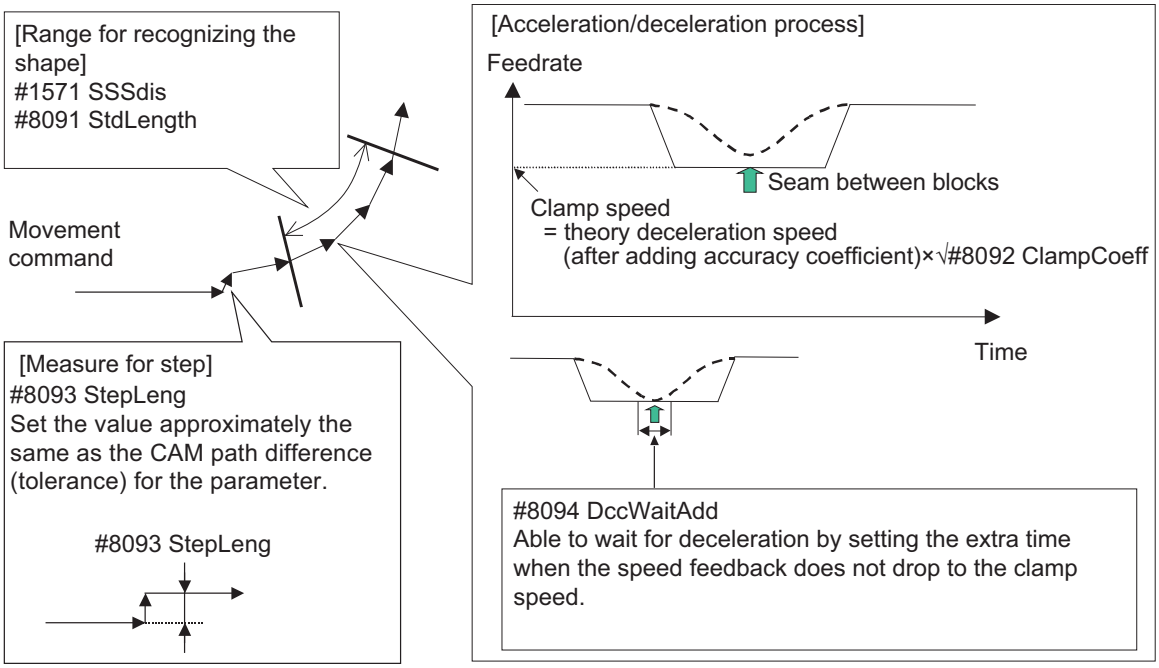


## Precautions

(1) Pre-reading is executed during SSS control, so a program error could occur before the block containing the error is executed.

(2) Buffer correction is not guaranteed during SSS control.

(3) If automatic/manual simultaneous or automatic handle feed interrupt are used during SSS control, the machining accuracy will not be guaranteed.

(4) If a fine arc command is issued during SSS control, it may take longer to machine.

(5) The same path as single block operation will be used during graphic check.

(6) The line under the cutting feedrate and arc command block are subjected to the speed control in the SSS control. The command blocks that are not subjected to speed control, decelerate first and automatically switch the SSS control ON and OFF.

(7) SSS control is temporarily disabled in the following modal:

- Polar coordinate interpolation
- Cylindrical interpolation
- User macro interruption enable (M96)
- Feed per revolution (synchronous feed)
- Constant surface speed control
- Fixed cycle
- 3-dimensional coordinate conversion
- Automatic tool length measurement

(8) There are some restrictions for each high-accuracy control. Refer to each section for restrictions.

- "17.2 High-accuracy Control"
- "17.3 High-speed High-accuracy Control"

## 17.2.3 Tolerance Control

### Function and purpose

This function obtains the optimum clamp speed for corners or curves based on the designated tolerance to perform operations. It also ensures smooth passing within the tolerance range in corner sections, which suppresses machine vibrations. This means that the clamp speed can be increased to reduce the cycle time.
This function allows the machine to operate with the optimum tool path and speed, simply by specifying the tolerance, so an operator can easily carry out high quality machining.
The tolerance refers to the allowable error amount between the path commanded in the machining program and the path output by NC.
The validity of this function depends on the MTB specifications. This function also requires the SSS control specifications because it can only be used under SSS control.

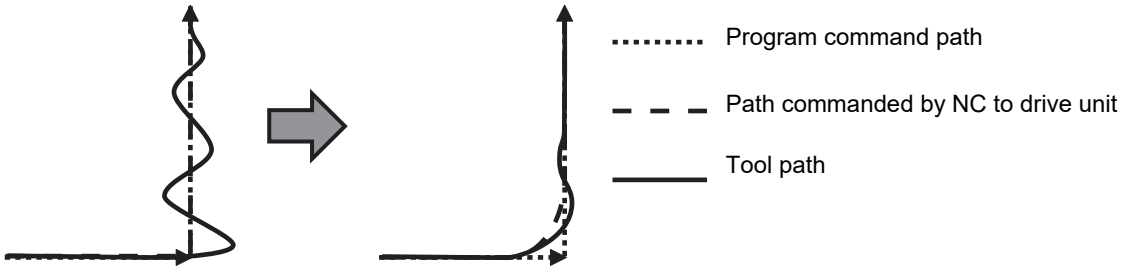


Tolerance control: Invalid　　Tolerance control: Valid

This function is enabled when the following conditions are satisfied:

(1) The tolerance control specification is valid. (Based on the MTB specifications.)

(2) The parameter "#8090 SSS ON" is set to "1".

(3) The parameter "#12066 Tolerance ctrl ON" is set to "1". (*1)(*2)

(4) High-accuracy control (G61.1/G08P1), spline interpolation (G61.2/G05.1Q2), spline interpolation 2 (G61.4), or high-speed high-accuracy control I/II/III (G05.1Q1/G05P10000/G05P20000) is valid.

(*1) Even if conditions (1) and (3) are satisfied, an operation error (M01 0139) will occur and the cycle start cannot be performed automatically if the parameter "#8090 SSS ON" is set to "0". In this case, enable SSS control and reset the alarm to start the cycle automatically.

(*2) A setting error will occur if "1" is set when this specification is invalid.

## Command format

Set the tolerance with the parameter "#2659 tolerance" or the ",K" address following the G code (G61.1 or G61.4 command). When the setting value is "0", this function runs with "0.01(mm)".

### Tolerance specification

| |
|---|
| **G61.1 or G61.4 ,K__ ;** |

| | |
|---|---|
| ,K | Tolerance (mm) |

- The range of the command value is 0.000 to 100.000. If a value exceeding the range is commanded, a program error (P35) will occur.
- The tolerance designated by ",K" is applied to all axes in the part system.
- When "0" is designated or ",K" is omitted, the program runs based on the value of the parameter "#2659 tolerance".
- The tolerance designated by ",K" is not held after reset. Therefore, if ",K" is not designated in the G61.1 or G61.4 command after reset, the axis runs based on the value of the parameter "#2659 tolerance".

**Note**

(1) The G61.4 command requires the specifications of spline interpolation 2.

## Detailed description

The axis moves in the designated tolerance range during tolerance control.
The tolerance on the corner shape is as shown on the right.

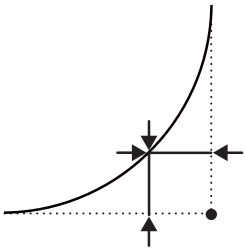

### Speed control

The clamp speed is obtained from the tolerance in the corner or curve section during tolerance control.
As the designated tolerance is lower, the axis speed decelerates.

| | Tolerance: High | Tolerance: Low |
|---|---|---|
| Command path | 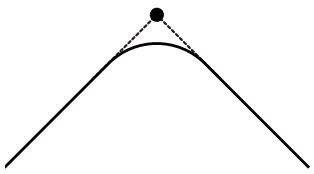 | 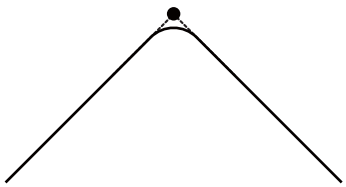 |
| Resultant speed | 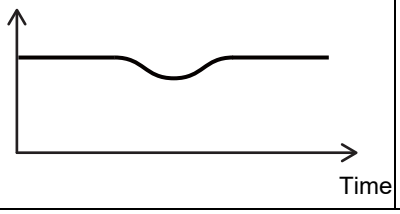  | 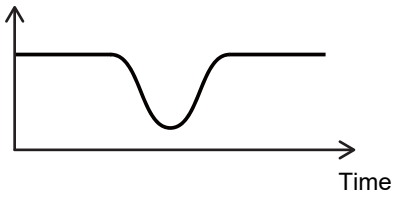  |

### Parameters valid during tolerance control

The parameters valid and invalid during tolerance control are as follows. Some parameters depend on the MTB specifications.

(1) Valid parameters

| No. | Parameter name | Supplements |
|---|---|---|
| 1206 | G1bF | When combining with the variable-acceleration pre-interpolation acceleration/deceleration or axis-specific acceleration tolerance control, specify parameters "#2157 G1bFx" and "#2158 G1btLx". |
| 1207 | G1btL | |
| 1568 | SfiltG1 | |
| 12051 | Jerk_filtG1 | |
| 2659 | tolerance | |

(2) Invalid parameters (Parameters with no setting required)

| No. | Parameter name | Supplements |
|---|---|---|
| 1570 | Sfilt2 | Ignored even if the value is entered. |
| 2159 | compx | Ignored even if the value is entered. The clamp speed is obtained from the tolerance during tolerance control; therefore, parameters for adjusting the clamp speed are not required. |
| 8019 | R COMP | |
| 8020 | DCC ANGLE | |
| 8021 | COMP CHANGE | |
| 8022 | CORNER COMP | |
| 8023 | CURVE COMP | |
| 8096 | Deceler. coeff. ON | |
| 8097 | Corner decel coeff | |
| 8098 | Arc clamp spd coef | |

### Program example

| | |
|---|---|
| :<br>G91 ; | |
| G61.1 ,K0.02; | Designate tolerance 0.02 (mm). |
| G01 X0.1 Z0.1 F1000 ;<br>X0.1 Z-0.2 ;<br>Y0.1 ; | Tolerance: 0.02 (mm) |
| G61.1 ,K0; | Designate tolerance 0 (mm). |
| X-0.1 Z-0.05 ;<br>X-0.1 Z-0.3 ; | Tolerance: Follows parameter "#2659 tolerance". |
| G64 ;<br>: | |

## Precautions

(1) While tolerance control is valid, tolerance control may be canceled temporarily depending on some commands. If tolerance control is canceled temporarily, the axis moves to the commanded position without taking an inner route in a corner section. After this, when a temporary cancel cause is removed, tolerance control restarts.
The temporary cancel conditions are as follows:

(a) Modal in which the group 1 command is not G01 (linear interpolation) or G02/G03 (circular interpolation).

(b) Under single block operation

(c) Modal in which SSS control is disabled temporarily (Modal shown below)

Polar coordinate interpolation
Cylindrical interpolation
User macro interruption enable
Feed per revolution (Synchronous feed)
Constant surface speed control
Fixed cycle
3-dimensional coordinate conversion
Automatic tool length measurement
Exponential interpolation

(2) The stored stroke limit's prohibited range is determined based on the program command path. As a result, machining may not be stopped even if the command moved inward by tolerance control enters the prohibited range.

(3) If a feed hold signal is turned ON at a corner, machining stops on the program command path.
This means that it does not stop at point A in the figure below but at point B.

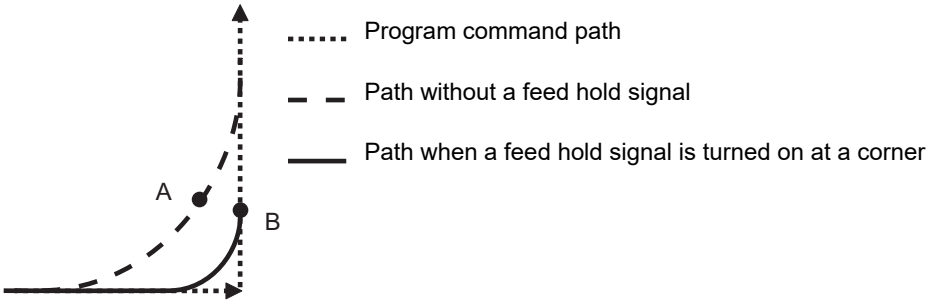


(4) When the tolerance control is enabled (#12066 = "1"), the maximum value of the fine segment processing capability is 100 kBPM for M800 Series and 67.5 kBPM for M80 Series.

### 17.2.4 Initial High-accuracy Control

If "#1148 I_G611" (Initial high-accuracy) is set by the MTB specifications, high-accuracy control-related functions can be enabled when the power is turned ON.
At power ON, the modes set by this parameter are enabled, but each mode can be changed to a different one by commanding as follows in the machining program.

| #1148 setting value | Modes enabled at power ON |
|---|---|
| 0 | G08P0/G64 (cutting mode) command |
| 1 | G08P1/G61.1 (high-accuracy control mode) command |
| 2 | G05.1Q1 (high-speed high-accuracy control I mode) command |
| 3 | G05P10000 (high-speed high-accuracy control II mode) command |

It is impossible, however, to shift to the high-speed high-accuracy control II mode during the high-speed high-accuracy control I. Likewise, it is also impossible to shift to the high-speed high-accuracy control I mode during the high-speed high-accuracy control II.
To shift to either mode, cancel the current high-speed high-accuracy control mode using "G05.1 Q0" or "G05 P0" first and then command the target mode.
If any function set by this parameter is not included in your machine's specifications, an available high-accuracy function with a number smaller than the parameter setting is enabled.

## 17.2.5 Multi-part System Simultaneous High-accuracy

### Function and purpose

High-accuracy control and high-speed machining mode are available respectively in all part systems, however, the simultaneous usage of high-accuracy control and high-speed machining mode (including High-speed high-accuracy control I/II) are available only in part systems which are limited by the parameter "#8040 High-SpeedAcc". While high-accuracy control and high-speed machining mode are available simultaneously in a part system where this parameter is set to "1", a program error (P129) will occur in those where the parameter is set to "0" when commanded. Also, for part systems where "#8040 High-SpeedAcc" is set to "0", "#1148 I_G611" must be set to "0" (Cutting mode when the power is turned ON) or "1" (High-accuracy control mode when the power is turned ON). If the parameter "#1148 I_G611" is set to a value other than "0" and "1", the parameter is regarded as being set to "1".
Note that up to two part systems can be set to use high-accuracy control and high-speed machining mode simultaneously. If three or more part systems are set as such, an MCP alarm (Y51 0032) will occur.
If the parameter "#8040 High-SpeedAcc" is set to "0" for all part systems, only the first part system is handled as the one with the parameter set to "1".

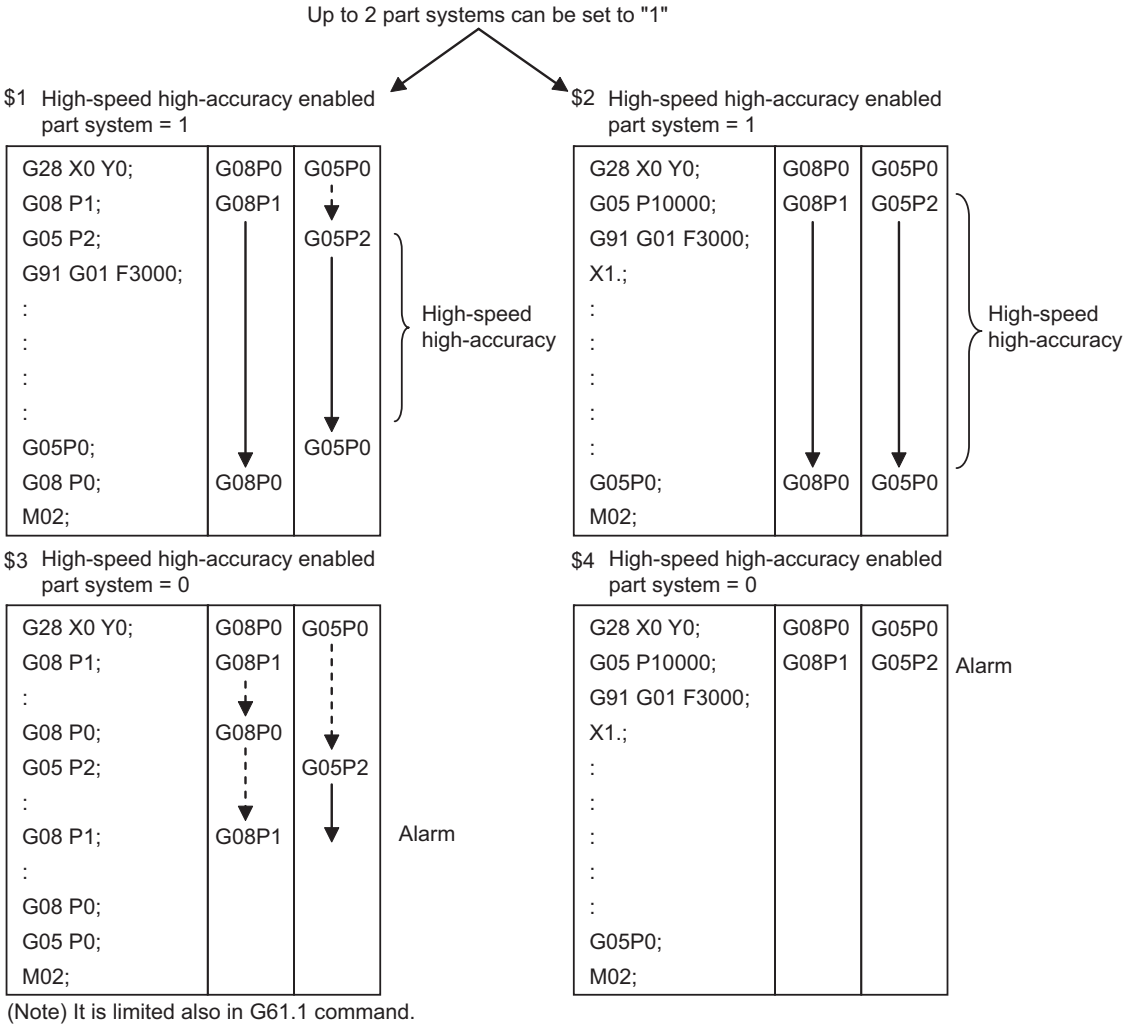

(Note) It is limited also in G61.1 command.

Refer to the following chapters for details of each high-accuracy control.
"17.2 High-accuracy Control"
"17.3 High-speed High-accuracy Control"

### Detailed description

When "#1148 I_G611" (Initial hi-precis) is enabled, the initial modal state after power ON will be the high-accuracy control mode. Refer to "17.2.4 Initial High-accuracy Control" for details.
In this case, the high-accuracy control mode is enabled if the multi-part system simultaneous high-accuracy specification is provided. Otherwise, the 1st part system enters the high-accuracy control mode, but the 2nd part system enters the cutting mode.

# 17.3 High-speed High-accuracy Control

It depends on the MTB specifications whether the modal state at power ON is high-speed high-accuracy control I, II, III, or OFF.
It also depends on the specifications whether to hold the modal state at reset.
Refer to your machine's specifications.
In the main text, the axis address refers to the address of an axis that exits on the machine.
It corresponds to the address designated in the parameters "#1013 axname" and "#1014 incax".
These parameter settings depend on the MTB specifications.

## 17.3.1 High-speed High-accuracy Control I, II ; G05.1 Q1/Q0, G05 P10000/P0

### Function and purpose

This function runs a machining program that approximates a freely curved surface with fine segments at high speed and with high-level accuracy. This is effective in increasing the speed of machining dies of a freely curved surface. This function is useful for machining which needs to make an edge at a corner or reduce an error from an inner route of curved shape.
A higher fine segment processing capability leads to a faster cutting speed, resulting in a shorter cycle time and a better machining surface quality. kBPM, the unit for the fine segment processing capability, is an abbreviation of "kilo blocks per minute" and refers to the number of machining program blocks that can be processed per minute.
In the main text, the axis address refers to the address of an axis that exits on the machine.
It corresponds to the address designated in the parameters "#1013 axname" and "#1014 incax".
These parameter settings depend on the MTB specifications.

#### Fine segment processing capability

The tables (1) to (2) describe the fine segment processing capability while the high-speed high-accuracy control is enabled. The units of values in the tables is kBPM (kilo Blocks Per Minute), which expresses the number of machining program blocks which can be processed per minute.
The table (1) shows the maximum values of the fine segment processing capability. The fine segment processing capability may decelerate in the conditions with high processing load as follows:

- Four or more axes are being commanded at the same time.
- A macro command or a variable command is included in a command.
- A compensation function such as the tool radius compensation is used.
- High-speed processing is selected for the processing cycle of the control unit (the parameter "#1468 ctrl period" is set to "-1").
- A large number of axes are installed.

Fine segment processing capability may be lowered when the acceleration rate and speed are set to such values that the length of time to reach the specified speed exceeds the maximum value (5000 ms) of acceleration/deceleration time constant before interpolation (parameter "#1207 G1btL").

When the tolerance control is enabled (#12066 = "1"), the maximum value of the fine segment processing capability is 100 kBPM for M800 Series and 67.5 kBPM for M80 Series.

(1) High-speed high-accuracy control I

| Number of part systems/number of axes | Number of part systems | M850 / M830 | M80 | |
|---|---|---|---|---|
| | (#8040=1) | | Type A | Type B |
| 1-part system | 1 part system | 67.5 | 33.7 | - (*2) |
| 2-part system | 1 part system | 67.5 | 33.7 | - (*2) |
| | 2 part systems | 33.7 | 16.8 | - (*2) |
| 4-part system | 1 part system | 33.7 | - (*1) | - (*2) |
| Up to 16 axes | 2 part systems | 33.7 | - (*1) | - (*2) |
| 5 part systems or more or 17 axes or more | 1 part system | 16.8 | - (*1) | - (*2) |
| | 2 part systems | 16.8 | - (*1) | - (*2) |

(2) High-speed high-accuracy control II

| Number of part systems/number of axes | Number of part systems | M850 / M830 | M80 | |
|---|---|---|---|---|
| | (#8040=1) | | Type A | Type B |
| 1-part system | 1 part system | 168 (*3)(*4) | 67.5 | - (*2) |
| 2-part system | 1 part system | 100 | 67.5 | - (*2) |
| | 2 part systems | 67.5 | 33.7 | - (*2) |
| 4-part system | 1 part system | 33.7 | - (*1) | - (*2) |
| Up to 16 axes | 2 part systems | 33.7 | - (*1) | - (*2) |
| 5 part systems or more or 17 axes or more | 1 part system | 16.8 | - (*1) | - (*2) |
| | 2 part systems | 16.8 | - (*1) | - (*2) |

(*1) This system cannot be used for this model.

(*2) There are no high-speed high-accuracy control specifications.

(*3) 100 kBPM for a time constant expansion system.
(The time constant expansion system can be used in a system configured with a single part system when the specification is valid.)

(*4) In the network connection, the value described in the above table may not be guaranteed depending on the state.

## High-speed high-accuracy control simultaneously for two part systems

High-speed high-accuracy control I/II can be used simultaneously in up to two part systems.
High-speed high-accuracy control I/II can be used in a part system where "1" is set for the parameter "#8040 High-SpeedAcc". A program error occurs (P129) if this is commanded for a part system where "0" is set for the parameter.

If the parameter "#8040 High-SpeedAcc" is set to "0" for all part systems, only the first part system is handled as the one with the parameter set to "1". Also, a part system where the parameter "#1148 Initial hi-precis" is set to "2" to "4" is handled as the one with the parameter "#8040 High-SpeedAcc" set to "1".
The parameter "#8040 High-SpeedAcc" can be set to "1" for up to two part systems. If 3 or more part systems are set to "1", an MCP alarm (Y51 0032) occurs. When "1" is set for two part systems, the fine segment processing capability decreases compared to when "1" is set only for one part system.

## Command format

| | |
|---|---|
| **G05.1 Q1 ;** | **High-speed high-accuracy control I ON** |

| | |
|---|---|
| **G05.1 Q0 ;** | **High-speed high-accuracy control I OFF** |

| | |
|---|---|
| **G05 P10000 ;** | **High-speed high-accuracy control II ON** |

| | |
|---|---|
| **G05 P0 ;** | **High-speed high-accuracy control II OFF** |

### Note

(1) The high-speed high-accuracy mode I and II cannot be used at the same time.

(2) G05.1 Q1 (high-speed high-accuracy mode I) and G05 P10000 (high-speed high-accuracy mode II) are valid when the specifications are available regardless of the parameter "#1267 ext03/bit0" setting.

## Detailed description

(1) The high-speed high-accuracy control I / II can be used during tape, MDI, SD card or memory modes.

(2) The override, maximum cutting speed clamp, single block operation, dry run, handle interrupt and graphic trace are valid even during the high-speed high-accuracy control I / II modal.

(3) The machining speed may drop depending on the number of characters in one block.

(4) The high-speed high-accuracy control I / II function automatically turns the high-accuracy control mode ON. For high-accuracy control function, refer to "17.3 High-speed High-accuracy Control".

(5) Turn the tool nose radius compensation command ON and OFF during the high-speed high-accuracy control I / II mode.
If the high-speed high-accuracy control I / II mode is turned OFF without turning the tool nose radius compensation OFF, program error (P34) will occur.

(6) Turn the high-speed high-accuracy control I / II mode OFF before commanding data other than those that can be commanded.

(7) When using the high-speed high-accuracy control II mode, it is necessary to set the parameter "#1572 Cirorp" to eliminate the speed fluctuation at the seams between arc and straight line or arc and arc. This parameter, however, depends on the MTB specifications.

(8) Feedrate command F is clamped with the "#2110 Clamp (H-precision)" (Cutting feed clamp speed for high-accuracy control mode) set with parameter.

(9) Rapid traverse rate enables "#2109 Rapid(H-precision)" (Rapid traverse rate during high-accuracy control mode) set by the parameter.

(10) When the "#2109 Rapid(H-precision)" is set to "0", the movement follows "#2001 rapid" (rapid traverse rate) set by the parameter. Also, when "#2110 Clamp (H-precision)" is set to "0", the speed will be clamped with "#2002 clamp" (Cutting clamp speed) set with parameter.

### Enabling conditions

To enable each high-speed high-accuracy control function, it is necessary to satisfy the following conditions respectively:

(1) The specification of each function is valid.

(2) Each function is in a valid modal state. (Refer to "Relationship with other functions".)

(3) Each function is enabled by one of the following procedures:

- Command each in the machining program.
- Set each for the parameter "#1148 Initial hi-precis". (The modal at power ON corresponds to each high-speed high-accuracy control function.)

| | #1148 setting |
|---|---|
| High-speed high-accuracy control I | 2 |
| High-speed high-accuracy control II | 3 |

## Relationship with other functions

### Relationship between the high-speed high-accuracy control I and other functions

(1) Relationship between the high-speed high-accuracy control I and the other G code functions
Column A: Operation when the additional function is commanded while the high-speed high-accuracy control I is enabled
Column B: Operation when the high-speed high-accuracy control I (G05.1Q1) is commanded while the additional function is enabled
○: The high-speed high-accuracy control I and the additional function are both enabled
Δ: The high-speed high-accuracy control I is temporarily canceled, while the additional function is enabled
X: Alarm generation (the text in parentheses refers to the number of the program error to be generated.)
-: No combination
□: Others

| Group | G code (G code list: 3) | Additional function | A | B |
|---|---|---|---|---|
| 0 | G04 | Dwell | Δ | - |
| | G05 P0 | High-speed machining mode II OFF<br>High-speed high-accuracy control II OFF | × (P34) | □ (*2) |
| | G05 P2 | High-speed machining mode II ON | □ (*4) | □ (*2) |
| | G05 P10000 | High-speed high-accuracy control II ON | × (P34) | × (P34) |
| | G05.1 Q0 | High-speed high-accuracy control I OFF<br>Spline interpolation OFF | □ (*1) | □ (*2) |
| | G05.1 Q1 | High-speed high-accuracy control I ON | ○ | ○ |
| | G08 P0 | High-accuracy control OFF | □ (*3) | □ (*2) |
| | G08 P1 | High-accuracy control ON | □ (*3) | □ (*2) |
| | G09 | Exact stop check | Δ | - |
| | G10 I_J_<br>G10 K_ | Parameter coordinate rotation input | Δ | - |
| | G10 L2 | Compensation data input by program | Δ | - |
| | G10 L70<br>G10 L50 | Parameter input by program | Δ | - |
| | - (G22(*)) | Soft limit ON | ○ | ○ |
| | - (G23(*)) | Soft limit OFF | ○ | ○ |
| | G27 | Reference position check | Δ | - |
| | G28 | Reference position return | Δ | - |
| | G29 | Start position return | Δ | - |
| | G30 | 2nd to 4th reference position return | Δ | - |
| | G30.1 | Tool exchange position return 1 | Δ | - |
| | G30.2 - G30.5 | Tool exchange position return 2 to 5 | Δ | - |
| | G31 | Skip<br>Multiple-step skip 2 | Δ | - |
| | G31.1 - G31.3 | Multi-step skip 1 to 3 | Δ | - |
| | G37 | Automatic tool length measurement | Δ | - |
| | G92 | Spindle clamp speed setting<br>Coordinate system setting | Δ | - |
| | - (G50.2, G250(*)) | Tool spindle synchronization IB (spindle-spindle, polygon)/IC (spindle-NC Axis, polygon) cancel | ○ | ○ |
| | - (G51.2, G251(*)) | Tool spindle synchronization IB (spindle-spindle, polygon) ON | ○ | ○ |
| | | Tool spindle Synchronization IC (spindle-NC Axis, polygon) ON | Δ | Δ |
| | G92.1 | Workpiece coordinate system preset | Δ | - |

| Group | G code<br>(G code list: 3) | Additional function | A | B |
|---|---|---|---|---|
| 0 | G52 | Local coordinate system setting | Δ | - |
| | G53 | Machine coordinate system selection | Δ | - |
| | G65 | User macro simple call | □ (*5) | □ (*6) |
| | G110 | Mixed control I (cross axis control) | ○ | ○ |
| | G111 | Axis name switch | ○ | ○ |
| | G113 | Spindle synchronization control OFF | ○ | ○ |
| | G114.1 | Spindle synchronization control ON | ○ | ○ |
| | G114.2 | Tool spindle synchronization I<br>(polygon machining mode) | ○ | ○ |
| | G114.3 | Tool spindle synchronization II<br>(hobbing mode) | Δ | Δ |
| | G115<br>G116 | Start point timing synchronization | Δ | - |
| | G117 | M code output during axis traveling | Δ | - |
| | G122 | Sub part system control I | × (P652) | □ (*7) |
| | G125 | Control axis synchronization between part systems | ○ | ○ |
| | G126 | Control axis superimposition | Δ | × (P29) |
| | G140 | Arbitrary axis exchange control | × (P126) | ○ |
| | G141 | Arbitrary axis exchange return | × (P126) | - |
| | G142 | Reference axis arrange return | × (P126) | - |
| | G144 | Sub part system control II | × (P652) | □ (*7) |
| 1 | G00 | Positioning | Δ | Δ |
| | G01 | Linear interpolation | ○ | ○ |
| | G02<br>G03 | Circular interpolation | □<br>When SSS is enabled: ○<br>When SSS is disabled: Δ | □<br>When SSS is enabled: ○<br>When SSS is disabled: Δ |
| | G02.3<br>G03.3 | Exponential interpolation | Δ | Δ |
| | G33 | Thread cutting | Δ | Δ |
| | G34 | Variable lead thread cutting | Δ | Δ |
| | G35<br>G36 | Circular thread cutting | Δ | Δ |
| 2 | G16 | Milling interpolation plane selection (Y-Z cylindrical plane) | × (P34) | × (P34) |
| | G17/G18/G19 | Plane selection | ○ | ○ |
| 3 | G90 | Absolute command | ○ | ○ |
| | G91 | Incremental command | ○ | ○ |
| 4 | G22 | Barrier check ON | ○ | ○ |
| | G23 | Barrier check OFF | ○ | ○ |
| | - (G22(*)) | Soft limit ON | ○ | ○ |
| | - (G23(*)) | Soft limit OFF | ○ | ○ |
| 5 | G94 | Asynchronous feed (feed per minute) | ○ | ○ |
| | G95 | Synchronous feed (feed per revolution) | ○ | ○ |
| 6 | G20 | Inch command | ○ | ○ |
| | G21 | Metric command | ○ | ○ |

| Group | G code (G code list: 3) | Additional function | A | B |
|---|---|---|---|---|
| 7 | G40 | Tool nose radius compensation OFF | ○ | ○ |
| | G41<br>G42 | Tool nose radius compensation ON | ○ | × (P29) |
| | G46 | Tool nose radius compensation ON (automatic direction identification) | ○ | × (P29) |
| 9 | G80 | Fixed cycle cancel | ○ | ○ |
| | Other than G80 | Fixed cycle | Δ | Δ |
| 10 | G98 | Fixed cycle (Initial level return) | ○ | ○ |
| | G99 | Fixed cycle (R point level return) | ○ | ○ |
| 12 | G54 - G59,<br>G54.1 | Workpiece coordinate system selection | ○ | ○ |
| 13 | G61 | Exact stop check mode | □ (*8) | □ (*9) |
| | G61.1 | High-accuracy control | □ (*3) | □ (*2) |
| | G62 | Automatic corner override | □ (*3) | □ (*2) |
| | G63 | Tapping mode | □ (*3) | □ (*2) |
| | G64 | Cutting mode | □ (*3) | □ (*2) |
| 14 | G66<br>G66.1 | User macro modal call | □ (*5) | □ (*6) |
| | G67 | User macro modal call cancel | ○ | ○ |
| 15 | G68 | Mirror image for facing tool posts ON | × (P29) | × (P29) |
| | G69 | Mirror image for facing tool posts OFF | ○ | ○ |
| | - (G68(*)) | Mirror image for facing tool posts ON<br>Balance cut ON | × (P29) | × (P29) |
| | - (G69(*)) | Mirror image for facing tool posts OFF<br>Balance cut OFF | ○ | ○ |
| 16 | G68.1 | Coordinate rotation by program ON | ○ | ○ |
| | | 3-dimensional coordinate conversion ON | × (P922) | × (P921) |
| | G69.1 | Coordinate rotation by program OFF | ○ | ○ |
| 17 | G96 | Constant surface speed control ON | ○ | ○ |
| | G97 | Constant surface speed control OFF | ○ | ○ |
| 18 | G14 | Balance cut OFF | ○ | ○ |
| | G15 | Balance cut ON | × (P29) | × (P29) |
| 19 | G12.1 | Milling interpolation ON | × (P485) | Δ |
| | G13.1 | Milling interpolation OFF | ○ | ○ |
| | - (G07.1, G107(*)) | Cylindrical interpolation | × (P485) | Δ |
| | - (G12.1, G112(*)) | Polar coordinate interpolation ON | × (P485) | Δ |
| | - (G13.1, G113(*)) | Polar coordinate interpolation OFF | ○ | ○ |
| 20 | G43.1 | 1st spindle control mode | ○ | ○ |
| | G44.1 | 2nd spindle control mode | ○ | ○ |
| | G47.1 | Two spindles simultaneous control mode | ○ | ○ |
| 24 | G188 | Program format switch ON | □ (*10) | ○ |
| | G189 | Program format switch cancel | □ (*10) | ○ |

(*) Only applies to G code lists 6 and 7

(*1) Disables the high-speed high-accuracy control I.

(*2) Enables the high-speed high-accuracy control I.

(*3) High-speed high-accuracy control I continues.

(*4) Enables the high-speed machining mode II.

(*5) Enables the high-speed high-accuracy control I in a macro program.

(*6) Enables the high-speed high-accuracy control I if G05.1Q1 is commanded in a macro program.

(*7) Enables the high-speed high-accuracy control I if G05.1Q1 is commanded in a sub part system.

(*8) Enables the exact stop check mode.

(*9) Exact stop check mode continues.

(*10) Depends on the setting of the parameter "#1148 Initial hi-precis".

(2) Relationship between the high-speed high-accuracy control I and functions other than G codes
Column A: Operation when the additional function is commanded while the high-speed high-accuracy control I is enabled
Column B: Operation when the high-speed high-accuracy control I (G05.1Q1) is commanded while the additional function is enabled
○: The high-speed high-accuracy control I and the additional function are both enabled
Δ: The high-speed high-accuracy control I is temporarily canceled, while the additional function is enabled
X: Alarm generation (the text in parentheses refers to the number of the program error to be generated.)
-: No combination
□: Others

| Additional function | A | B |
|---|---|---|
| SSS ON | - | ○ |
| Mirror image by parameter setting ON | - | × (P34) |
| Mirror image by external input | - | × (P34) |
| Subprogram call (M98) | □ (*1) | □ (*2) |
| Timing synchronization between part systems | □ (*3) | - |
| Inclined axis control | - | ○ |
| T code offset | ○ | ○ |
| T code mirror image for facing tool posts | × (P29) | × (P29) |
| MTB macro | □ (*4) | □ (*5) |
| Macro interruption | □ (*6) | □ (*7) |
| PLC interruption | □ (*6) | □ (*7) |
| Corner chamfering/Corner R | Δ | - |
| Linear angle command | ○ | - |
| Geometric command | ○ | - |
| Chopping | ○ | ○ |
| Optional block skip | ○ | - |

(*1) Enables the high-speed high-accuracy control I in a subprogram.

(*2) Enables the high-speed high-accuracy control I if G05.1Q1 is commanded in a subprogram.

(*3) Enables timing synchronization.

(*4) Enables the high-speed high-accuracy control I in a MTB program.

(*5) Enables the high-speed high-accuracy control I if G05.1Q1 is commanded in a MTB program.

(*6) Enables the high-speed high-accuracy control I in an interrupt program.

(*7) Enables the high-speed high-accuracy control I if G05.1Q1 is commanded in an interrupt program.

### Relationship between the high-speed high-accuracy control II and other functions

(1) Relationship between the high-speed high-accuracy control II and G code functions
Column A: Operation when the additional function is commanded while the high-speed high-accuracy control II is enabled
Column B: Operation when the high-speed high-accuracy control II (G05P10000) is commanded while the additional function is enabled
○: The high-speed high-accuracy control II and the additional function are both enabled
Δ: The high-speed high-accuracy control II is temporarily canceled, while the additional function is enabled
X: Alarm generation (the text in parentheses refers to the number of the program error to be generated.)
-: No combination
□: Others

| Group | G code (G code list: 3) | Additional function | A | B |
|---|---|---|---|---|
| 0 | G04 | Dwell | Δ | - |
| | G05 P0 | High-speed machining mode II OFF<br>High-speed high-accuracy control II OFF | □ (*1) | □ (*2) |
| | G05 P2 | High-speed machining mode II ON | □ (*4) | □ (*2) |
| | G05 P10000 | High-speed high-accuracy control II ON | □ (*3) | □ (*3) |
| | G05.1 Q0 | High-speed high-accuracy control I OFF<br>Spline interpolation OFF | □ (*3) | □ (*2) |
| | G05.1 Q1 | High-speed high-accuracy control I ON | × (P34) | × (P34) |
| | G08 P0 | High-accuracy control OFF | □ (*3) | □ (*2) |
| | G08 P1 | High-accuracy control ON | □ (*3) | □ (*2) |
| | G09 | Exact stop check | Δ | - |
| | G10 I_J_<br>G10 K_ | Parameter coordinate rotation input | Δ | - |
| | G10 L2 | Compensation data input by program | Δ | - |
| | G10 L70<br>G10 L50 | Parameter input by program | Δ | - |
| | - (G22(*)) | Soft limit ON | ○ | ○ |
| | - (G23(*)) | Soft limit OFF | ○ | ○ |
| | G27 | Reference position check | Δ | - |
| | G28 | Reference position return | Δ | - |
| | G29 | Start position return | Δ | - |
| | G30 | 2nd to 4th reference position return | Δ | - |
| | G30.1 | Tool exchange position return 1 | Δ | - |
| | G30.2 - G30.5 | Tool exchange position return 2 to 5 | Δ | - |
| | G31 | Skip<br>Multiple-step skip 2 | Δ | - |
| | G31.1 - G31.3 | Multi-step skip 1 to 3 | Δ | - |
| | G37 | Automatic tool length measurement | Δ | - |
| | G92 | Spindle clamp speed setting<br>Coordinate system setting | Δ | - |
| | - (G50.2, G250(*)) | Tool spindle synchronization IB (spindle-spindle, polygon)/IC (spindle-NC Axis, polygon) cancel | ○ | ○ |
| | - (G51.2, G251(*)) | Tool spindle synchronization IB (spindle-spindle, polygon) ON | ○ | ○ |
| | | Tool spindle Synchronization IC (spindle-NC Axis, polygon) ON | Δ | Δ |
| | G92.1 | Workpiece coordinate system preset | Δ | - |
| | G52 | Local coordinate system setting | Δ | - |
| | G53 | Machine coordinate system selection | Δ | - |
| | G65 | User macro simple call | □ (*5) | □ (*6) |
| | G110 | Mixed control I (cross axis control) | ○ | ○ |

| Group | G code (G code list: 3) | Additional function | A | B |
|---|---|---|---|---|
| 0 | G111 | Axis name switch | ○ | ○ |
| | G113 | Spindle synchronization control OFF | ○ | ○ |
| | G114.1 | Spindle synchronization control ON | Δ | Δ |
| | G114.2 | Tool spindle synchronization I (polygon machining mode) | Δ | Δ |
| | G114.3 | Tool spindle synchronization II (hobbing mode) | Δ | Δ |
| | G115<br>G116 | Start point timing synchronization | Δ | - |
| | G117 | M code output during axis traveling | Δ | - |
| | G122 | Sub part system control I | × (P652) | □ (*7) |
| | G125 | Control axis synchronization between part systems | ○ | ○ |
| | G126 | Control axis superimposition | Δ | × (P29) |
| | G140 | Arbitrary axis exchange control | × (P126) | ○ |
| | G141 | Arbitrary axis exchange return | × (P126) | - |
| | G142 | Reference axis arrange return | × (P126) | - |
| | G144 | Sub part system control II | × (P652) | □ (*7) |
| 1 | G00 | Positioning | Δ | Δ |
| | G01 | Linear interpolation | ○ | ○ |
| | G02<br>G03 | Circular interpolation | ○ | ○ |
| | G02.3<br>G03.3 | Exponential interpolation | Δ | Δ |
| | G33 | Thread cutting | Δ | Δ |
| | G34 | Variable lead thread cutting | Δ | Δ |
| | G35<br>G36 | Circular thread cutting | Δ | Δ |
| 2 | G16 | Milling interpolation plane selection (Y-Z cylindrical plane) | × (P34) | × (P34) |
| | G17/G18/G19 | Plane selection | ○ | ○ |
| 3 | G90 | Absolute command | ○ | ○ |
| | G91 | Incremental command | ○ | ○ |
| 4 | G22 | Barrier check ON | Δ | Δ |
| | G23 | Barrier check OFF | ○ | ○ |
| 5 | G94 | Asynchronous feed (feed per minute) | ○ | ○ |
| | G95 | Synchronous feed (feed per revolution) | Δ | Δ |
| 6 | G20 | Inch command | ○ | ○ |
| | G21 | Metric command | ○ | ○ |
| 7 | G40 | Tool nose radius compensation OFF | ○ | ○ |
| | G41<br>G42 | Tool nose radius compensation ON | ○ | ○ |
| | G46 | Tool nose radius compensation ON (automatic direction identification) | ○ | ○ |
| 9 | G80 | Fixed cycle cancel | ○ | ○ |
| | Other than G80 | Fixed cycle | Δ | Δ |
| 10 | G98 | Fixed cycle (Initial level return) | ○ | ○ |
| | G99 | Fixed cycle (R point level return) | ○ | ○ |
| 12 | G54 - G59<br>G54.1 | Workpiece coordinate system selection | ○ | ○ |

| Group | G code (G code list: 3) | Additional function | A | B |
|---|---|---|---|---|
| 13 | G61 | Exact stop check mode | Δ | Δ |
| | G61.1 | High-accuracy control | □ (*3) | □ (*2) |
| | G62 | Automatic corner override | Δ | Δ |
| | G63 | Tapping mode | Δ | Δ |
| | G64 | Cutting mode | □ (*3) | □ (*2) |
| 14 | G66<br>G66.1 | User macro modal call | Δ | Δ |
| | G67 | User macro modal call cancel | ○ | ○ |
| 15 | G68 | Mirror image for facing tool posts ON | × (P29) | × (P29) |
| | G69 | Mirror image for facing tool posts OFF | ○ | ○ |
| | - (G68(*)) | Mirror image for facing tool posts ON | × (P29) | × (P29) |
| | | Balance cut ON | × (P29) | × (P29) |
| | - (G69(*)) | Mirror image for facing tool posts OFF | ○ | ○ |
| | | Balance cut OFF | ○ | ○ |
| 16 | G68.1 | Coordinate rotation by program ON | ○ | ○ |
| | | 3-dimensional coordinate conversion ON | × (P922) | × (P921) |
| | G69.1 | Coordinate rotation by program OFF | ○ | ○ |
| 17 | G96 | Constant surface speed control ON | ○ | ○ |
| | G97 | Constant surface speed control OFF | ○ | ○ |
| 18 | G14 | Balance cut OFF | ○ | ○ |
| | G15 | Balance cut ON | × (P29) | × (P29) |
| 19 | G12.1 | Milling interpolation ON | × (P34) | × (P481) |
| | G13.1 | Milling interpolation OFF | ○ | ○ |
| | - (G07.1, G107(*)) | Cylindrical interpolation | × (P34) | × (P481) |
| | - (G12.1, G112(*)) | Polar coordinate interpolation ON | × (P34) | × (P481) |
| | - (G13.1, G113(*)) | Polar coordinate interpolation OFF | ○ | ○ |
| 20 | G43.1 | 1st spindle control mode | ○ | ○ |
| | G44.1 | 2nd spindle control mode | ○ | ○ |
| | G47.1 | Two spindles simultaneous control mode | ○ | ○ |
| 24 | G188 | Program format switch ON | □ (*8) | ○ |
| | G189 | Program format switch cancel | □ (*8) | ○ |

(*) Only applies to G code lists 6 and 7

(*1) Disables the high-speed high-accuracy control II.

(*2) Enables the high-speed high-accuracy control II.

(*3) High-speed high-accuracy control II continues.

(*4) Enables the high-speed machining mode II.

(*5) Enables the high-speed high-accuracy control II in a macro program.

(*6) Enables the high-speed high-accuracy control II if G05P10000 is commanded in a macro program.

(*7) Enables the high-speed high-accuracy control II if G05P10000 is commanded in a sub part system.

(*8) Depends on the setting of the parameter "#1148 Initial hi-precis".

(2) Relationship between the high-speed high-accuracy control II and functions other than G codes
Column A: Operation when the additional function is commanded while the high-speed high-accuracy control II is enabled
Column B: Operation when the high-speed high-accuracy control II (G05P10000) is commanded while the additional function is enabled
○: The high-speed high-accuracy control II and the additional function are both enabled
Δ: The high-speed high-accuracy control II is temporarily canceled, while the additional function is enabled
X: Alarm generation (the text in parentheses refers to the number of the program error to be generated.)
-: No combination
□: Others

| Additional function | A | B |
|---|---|---|
| SSS ON | - | ○ |
| Mirror image by parameter setting ON | - | Δ |
| Mirror image by external input | - | Δ |
| Subprogram call (M98) | □ (*1) | □ (*2) |
| Timing synchronization between part systems | □ (*3) | - |
| Inclined axis control | - | ○ |
| T code offset | ○ | ○ |
| T code mirror image for facing tool posts | × (P29) | × (P29) |
| MTB macro | □ (*4) | □ (*5) |
| Macro interruption | □ (*6) | □ (*7) |
| PLC interruption | □ (*6) | □ (*7) |
| Corner chamfering/Corner R | Δ | - |
| Linear angle command | Δ | - |
| Geometric command | Δ | - |
| Chopping | ○ | ○ |
| Optional block skip | ○ | - |

(*1) Enables the high-speed high-accuracy control II in a subprogram.

(*2) Enables the high-speed high-accuracy control II if G05P10000 is commanded in a subprogram.

(*3) Enables timing synchronization.

(*4) Enables the high-speed high-accuracy control II in a MTB program.

(*5) Enables the high-speed high-accuracy control II if G05P10000 is commanded in a MTB program.

(*6) Enables the high-speed high-accuracy control II in an interrupt program.

(*7) Enables the high-speed high-accuracy control II if G05P10000 is commanded in an interrupt program.

## 17.3.2 Cutting Speed Clamp with Acceleration Rate Judgment

### Function and purpose

This function is an additional function when the high-speed high-accuracy control II mode is ON.
The cutting feed clamp speed during the high-speed high-accuracy control II / III mode, when the following parameter is set to "1", is clamped so that the acceleration rate generated by each block movement does not exceed the tolerable value. This function clamps the speed optimally even at a section where "angle change at each block is small but entire curvature is large" such as shown below.
The tolerable value of the acceleration rate is calculated from the parameter "#1206 G1bF" and "#1207 G1btL" setting values. (Tolerable acceleration rate = #1206/#1207)

| Related parameter | | Details |
|---|---|---|
| #8034 | AccClampt ON | 0 : Clamp the cutting speed with parameter "#2002 clamp" (*1) or the corner deceleration function.<br>1 : Clamp the cutting speed with acceleration rate judgment. |

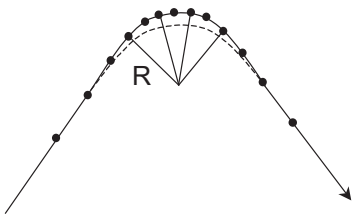


Speed control by curvature

If the tool moves along the large curvature section without deceleration, a large acceleration rate is generated resulting in a path error by curving inward.

(*1) When a speed is set in "#2109 Clamp(H-precision)", clamp is executed at that speed. When the setting value is "0", clamp is executed with "#2002 clamp".

## 17.3.3 High-speed Mode Corner Deceleration

### Function and purpose

This function is an additional function when high-speed high-accuracy control II mode is ON.
During high-accuracy control, if the angle between the adjacent blocks in the machining program is large, this function, conventionally, automatically decelerates the machining so that the acceleration rate generated when passing through the corner is maintained within the tolerable value.
If a fine block is inserted at the corner section in the machining program generated with the CAM, etc., the corner passing speed will not match the periphery. This can affect the machining surface.
In the corner deceleration in the high-speed mode, even when this type of fine block is inserted, the corner will be judged from a vantage point by setting the below parameter.
The fine block is excluded at the judgment of an angle, but is not excluded from the actual movement command.

| Related parameter | | Details |
|---|---|---|
| #8036 | CordecJudge | 0 : Judge the corner from the angle of the neighboring block.<br>1 : Judge the corner from the angle of the neighboring block, excluding the minute blocks. |
| #8027 | CorJudgeL | Exclude shorter block than this setting value. |

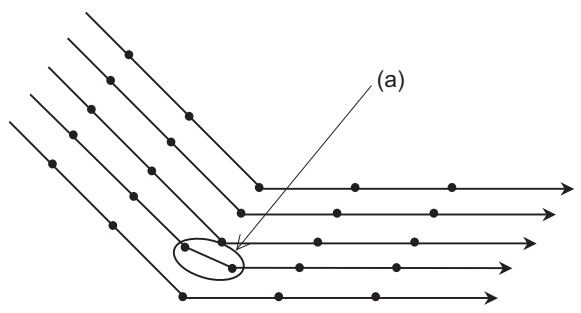


High-speed mode corner deceleration

(a) When"#8036 CordecJudge" is set to "1", corner deceleration is realized without an influence of fine blocks.

## 17.3.4 Precautions on High-speed High-accuracy Control

### Precautions

**Common precautions on high-speed high-accuracy control I/II**

(1) The validity of each high-speed high-accuracy control function depends on the MTB specifications. If any of the above is commanded when the corresponding specification is not available on the machine, a program error (P39) will occur.

(2) The machining speed may drop depending on the number of characters in one block.

(3) Feedrate command F is clamped with the "#2110 Clamp (H-precision)" (Cutting feed clamp speed for high-accuracy control mode) set with the parameter.

(4) The rapid traverse rate conforms to "#2109 Rapid(H-precision)" (Rapid traverse rate during high-accuracy control mode) set with the parameter.

(5) When "#2109 Rapid(H-precision)" (high-accuracy control mode rapid traverse rate) is set to "0", however, the movement follows "#2001 rapid" (Rapid traverse rate) set with the parameter. Also, when "#2110 Clamp (H-precision)" (Cutting feed clamp speed for high-accuracy control mode) is set to "0", the speed will be clamped with "#2002 clamp" (Cutting clamp speed) set with parameter.

(6) The automatic operation processing has priority in the high-speed high-accuracy control I/II modal, so the screen display, etc., may be delayed.

(7) The speed will decelerate once at the high-speed high-accuracy control I command (G05.1 Q1), high-speed high-accuracy control I OFF (G05.1 Q0), high-speed high-accuracy control II command (G05P10000), and high-speed high-accuracy control II OFF command (G05P0), so turn ON and OFF when the tool separates from the workpiece.

(8) When carrying out high-speed high-accuracy control I/II operation during tape mode, the machining speed may be suppressed depending on the program transmission speed and the number of characters in one block.

(9) If "#1205 G0bdcc" (G0 acceleration/deceleration before interpolation) is set to "1", the value set with the parameter "#2224 SV024 INP" (in-position detection width) will be used as the in-position width. "#2077 G0inps" (G0 in-position width) and the ",I" command (programmable in-position check) are disabled.

(10) When the "Manual/Automatic simultaneous valid n-th axis" signal (Y920) is changed during the execution of the movement blocks for the pre-interpolation acceleration/deceleration, the change will not be enabled immediately even if the axes are not moving. The change will be enabled when all the axes in the part system decelerate and stop.

**Common precautions on high-speed high-accuracy control II/III (*1)**

(*1) "III" is a function only for the machining center.

(1) If the variable command, variable operation command, or macro control statement is commanded while high-speed high-accuracy control II/III is enabled, the fine segment processing capability may decelerate. However, only when the variable commands and variable four-basic-arithmetic operation commands shown below are issued following the axis address or the F address of the cutting feedrate command, the fine segment processing capability does not decelerate.

(a) Referencing common variables or local variables
Common variables or local variables can be referenced (example: X#500, Y#1, Z##100, A#[#101], etc.).

(b) Four basic arithmetic rule
Four basic arithmetic rule (+, -, *, /) operations are available, and also the operation priority can be designated using parentheses ( ) ([#500 + #501] * #502, etc.).

If a common variable or local variable is referenced using the variable number operated with a macro operation instruction, a program error (P282) may occur. In this case, set the operated value to the variable before referencing the variable.

| | |
|---|---|
| Example that causes an error | F#[FIX[100.1]]; |
| Example that does not cause an error | #500 = FIX[100.1] ;<br>F#[#500] ; |

### Precautions on high-speed high-accuracy control I

(1) Command "G05.1Q0;" after turning the nose radius compensation OFF. If "G05.1Q0;" is commanded without turning the nose radius compensation OFF, a program error (P29) will occur.

(2) "G05.1Q1;" must be commanded alone in a block, which also applies to "G05.1Q0;". If a sequence number other than "N" is commanded, a program error (P33) will occur.

(3) A program error (P33) will occur if the G05.1 command block does not contain a Q command.

(4) If the high-speed high-accuracy control I command is issued in the high-speed high-accuracy control II modal, a program error (P34) will occur.

### Precautions on high-speed high-accuracy control II

(1) "G05P10000;" must be commanded alone in a block, which also applies to "G05P0;". If a sequence number other than "N" is commanded, the program error (P33) will occur.

(2) A program error (P33) will occur if the G05 command block does not contain a P command.

(3) The fairing function is valid for the continuous linear command (G01). Fairing is not possible in the case below.

(4) In a single block mode, operation stops at the end point of each block.

(5) When using the high-speed high-accuracy control II mode, set the parameter "#1572 Cirorp/bit0" to "1" to eliminate the speed fluctuation at the seams between the arc and the straight line, or between arcs.

(6) A program error (P33) will occur if the geometric command is issued during the high-speed high-accuracy control II.

(7) If the high-speed high-accuracy control II command is issued in the high-speed high-accuracy control I modal, a program error (P34) will occur.

(8) A program error (P922) will occur if 3-dimensional coordinate conversion is issued during the high-speed high-accuracy control II.

(9) A program error (P921) will occur if the high-speed high-accuracy control II is commanded during 3-dimensional coordinate conversion.

# 17.4 Machining Condition Selection I ; G120.1, G121

## Function and purpose

After initializing the machining condition parameter groups with the machining condition selection I function, the machining condition parameter groups can be switched by G code command.
Switching is also possible on the "Machining cond" (selecting) screen. In that case, however, the machining conditions selected on the screen are applied to all part systems.

## Command format

### Machining condition selection I

```
G120.1 P_  Q_ ;
```

| | |
|---|---|
| P | Machining purpose<br>0: Reference parameter<br>1: Usage 1<br>2: Usage 2<br>3: Usage 3 |
| Q | Condition<br>1: Condition 1<br>2: Condition 2<br>3: Condition 3<br>When omitted, Q1 will be applied |

### Machining condition selection I cancel

```
G121;
```

## Detailed description

(1) G120.1 and G121 commands are unmodal commands of G code group 0.
(2) Switching of the machining condition parameter group using the G120.1 or G121 command is only applied to the commanded part system.
(3) G120.1 must be commanded alone in a block, which also applies to G121. If it is not commanded alone in a block, a program error (P33) will occur.
(4) Address P in G120.1 command cannot be omitted. If omitted, a program error (P33) will occur.
(5) Address Q in G120.1 command can be omitted. If omitted, it will be handled as "Q1 (condition 1)" is commanded.
(6) When address P and Q in G120.1 command is commanded with a decimal point, the digit after the decimal point is ignored.
(7) If other than "0 to 3" is set to address P in G120.1 command or other than "1 to 3" is set to address Q, a program error (P35) will occur.
(8) When address P is set to "0" and address Q is omitted or set between "1" and "3" in G120.1 command, it will be switched to the reference parameter.
(9) It will be switched to the machining condition parameter group selected in "Machining cond" (selecting) screen by the G121 command.

(10) When the emergency stop and reset (reset 1, reset 2, and reset & rewind) are performed while running the machining program whose machining condition parameter group is switched by G120.1 command, it will be switched to the selected condition parameter group machining in "Machining cond" (selecting) screen.

(11) Because the parameters are switched after being decelerated by G120.1 and G121 commands, the workpiece may be damaged. Make sure to keep the tool away from the workpiece when commanding G120.1 and G121.

(12) When the machining condition parameter group is switched by G120.1 command more than once, the parameter group commanded last becomes valid.

(13) It is switched to the selected machining condition parameter group in the "Machining cond" (selecting) screen by program end (M02 and M30).

(14) If G120.1 and G121 are commanded without initializing the machining condition parameter group, a program error (P128) will occur.

## Program example

"Machining cond" (setting) screen

The displayed machining condition parameter group is switched depending on whether tolerance control is enabled or disabled (parameter "#12066 Tolerance ctrl ON").

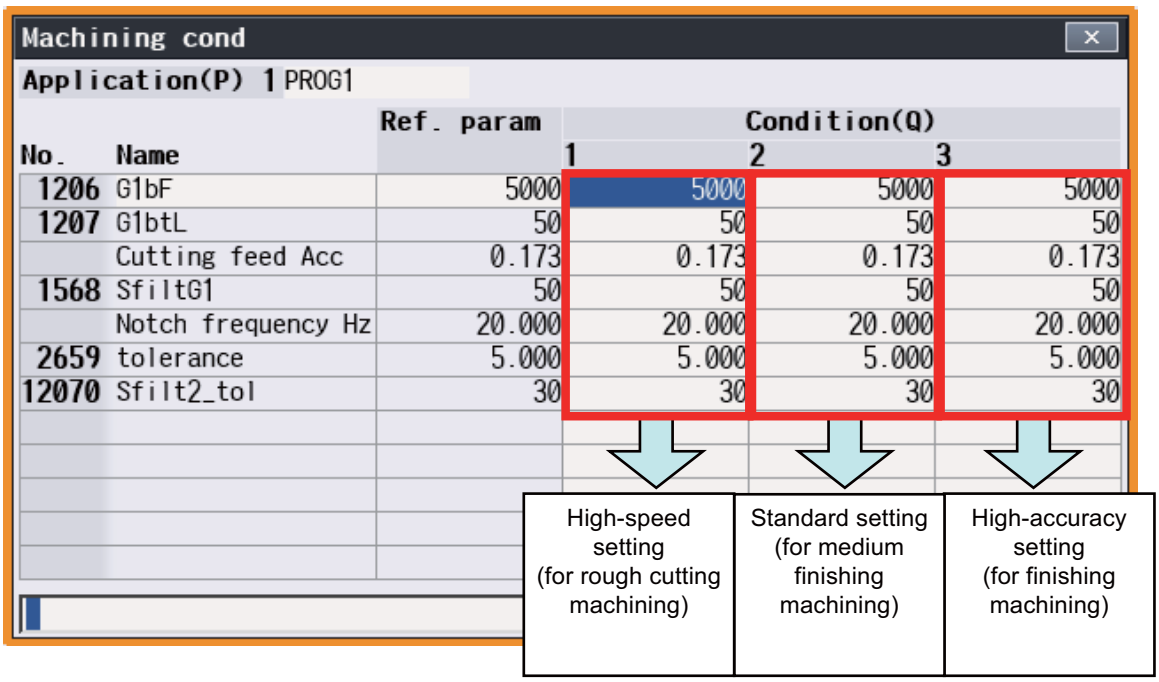

(1) When "Application1" and "Condition1" from the machining condition parameter group are selected in "Machining cond" (selecting) screen before running the program.

(The following machining programs are assuming "I" is X axis, "J" is Z axis and "K" is Y axis.)

```
N1      G28 U0;
N2      G28 W0 V0;
N3      G54 G00 Z2. Y2.;
N4      T0101;
N5      X20.;
N6      M33 S10000;
N7      G01 X10. F3000;
N8      F2000;
N9      G05 P10000;
N10     G01 Z2.099
        Y1.99;
N11     Z2.199;
:
:
N1499   G05 P0;
N1500   G28 U0;
N1501   G28 W0 V0;
N1502   M35;
N1503   G120.1 P1 Q3;
N1504   G54 G00 Z2. Y2.;
N1505   T0101;
N1506   X20.;
N1507   M33 S10000;
N1508   G01 X7. F3000;
N1509   F1200;
N1510   G05 P10000;
N1511   G01 Z2.099
        Y1.99;
N1512   Z2.199;
:
:
N2999   G05 P0;
N3000   G28 U0;
N3001   G28 W0 V0;
N3002   M35;
N3003   M30;
```

Machining condition parameters Operate with (machining usage 1/ condition 1)

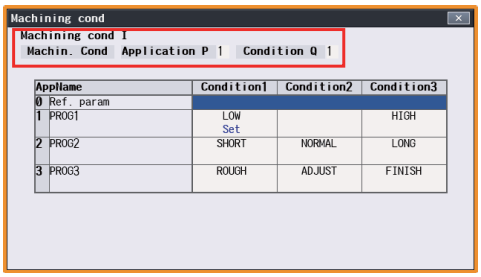


The machining condition parameter groups are switched.

Machining condition parameters Operate with (machining usage 1/ condition 3)

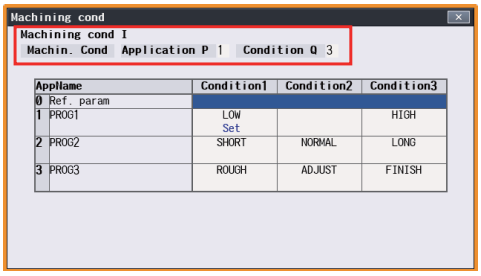


Return to the selected machining condition parameter group in "Machining cond" (selecting) screen at the program end.

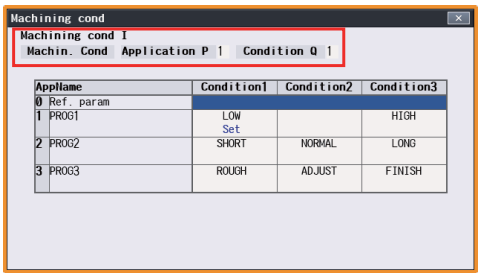

## Relationship with other functions

(1) G code modal that cause a program error when commanding G120.1 and G121 are listed below.

| G code | Function | Program error when G120.1 and G121 are commanded |
|---|---|---|
| G02.3, G03.3 | Exponential interpolation | P128 |
| G07.1 | Cylindrical interpolation (only 6 and 7 in G code list) | P128 |
| G12.1 | Polar coordinate interpolation (only 6 and 7 in G code list) | P128 |
| G10 | Parameter input by program | P421 |
| | Tool compensation input by program | |
| G33 | Thread cutting | P128 |
| G41, G42 | Tool nose radius compensation | P128 |
| G66, G66.1 | User macro (modal call A, B) | P128 |
| G73/G74/G75/G76/G76.1/G76.2/G80/G81/G82/G83/G83.1/G83.2/G84/G84.1/G84.2/G85/G87/G88/G88.1/G89 | Fixed cycle | P33 (When G120.1 command is issued) |
| | | P128 (When G121 command is issued) |
| | | |

## Precautions

(1) Because the parameters are switched after being decelerated once G120.1 or G121 is commanded, the workpiece may be damaged. Make sure to keep the tool away from the workpiece when commanding G120.1 and G121.

(2) It is switched to the reference parameter by turning the power ON again.

(3) When G120.1 and G121 are commanded, parameters are switched when smoothing for NC axes in all part systems become "0".

(4) The machining condition parameter group neither set the parameter setting from the program by G10 command nor read the parameters by system variables (from #100000).

(5) If the machining condition parameters are switched, the setting value of the parameter "#2010 fwd_g" is identical for all the NC axes in the switched part system.

(6) The machining condition parameters are not switched for the operation search. The machining condition parameters are switched for the restart search.

# 18

# Advanced Multi-Spindle Control Function

# 18.1 Spindle Synchronization

## Function and purpose

In a machine having two or more spindles, this function controls the rotation speed and phase of one spindle (reference spindle) in synchronization with the rotation of the other spindle (synchronized spindle).
This function provides, for example, an effect that re-grasps the workpiece grasped by the 1st spindle to the 2nd spindle while maintaining the rotation speed of the 1st spindle to reduce the cycle time by the 1st spindle deceleration time and the 2nd spindle acceleration time in the next process during re-grasping.
Furthermore, this function carries out turning or phase control while grasping both edges of a longer workpiece using the 1st and 2nd spindles, preventing a twist or bow from occurring in the workpiece under machining and enabling the machining accuracy.
The spindle synchronous multi-step acceleration/deceleration of the reference spindle is applied to the acceleration/deceleration of the spindle-synchronization relation spindle under spindle synchronization. (Only for C80 series)
The following control methods are available. Which mode is valid depends on the MTB specifications (parameter "#1300 ext36/bit7"). This section describes spindle synchronization control I that is executed with G commands.

Spindle synchronization I

The designation of the synchronized spindle and start/stop of the synchronization are executed by commanding G codes in the machining program.

Spindle synchronization II

The selections of the synchronized spindle and synchronization start, etc., are controlled from PLC based on the MTB specifications. Refer to the instruction manual issued by the MTB for details.

### Common setting for the spindle synchronization control I and II

When the spindle synchronization control is carried out, the followings must be set.
- Chuck close
- Error temporary cancel
- Phase monitor
- Multi-step acceleration/deceleration

For details, refer to "18.1.2 Precautions for Using Spindle Synchronization Control".

## 18.1.1 Spindle Synchronization I; G114.1

### Function and purpose

With the spindle synchronization I, the designation of the spindle and start/stop of the synchronization are executed by commanding G codes in the machining program.

This function cannot be combined with the following spindle synchronization functions while it is active. An operation error (M01 1005) occurs.

- Spindle synchronization I
- Spindle synchronization II
- Tool spindle synchronization IA
- Tool spindle synchronization IB (IC)
- Tool spindle synchronization II
- Spindle superimposition control

However, when the multiple spindle synchronization set control function is enabled, multiple spindle synchronization functions can be commanded simultaneously. The validity of this function depends on the MTB specifications (parameter "#1440 multi_sp_syn"). For details, refer to "18.5 Multiple Spindle Synchronization Set Control".

### Command format

**Spindle synchronization command**

| | |
|---|---|
| **G114.1 H__ D__ R__ A__ ;** | **Spindle synchronization start command** |

| | |
|---|---|
| **G114.1 D__ R__ ;** | **Phase shift amount change during spindle synchronization (*1) [C80]** |

(*1) This command changes the phase shift amount of the synchronized spindle of two spindles which have already synchronized by spindle synchronization command.

| | |
|---|---|
| H | Reference spindle specification |
| D | Synchronized spindle specification |
| R | Phase shift amount of synchronized spindle |
| A | Spindle synchronization acceleration/deceleration time constant |

The spindle synchronization ON (G114.1) command designates the reference spindle and synchronized spindle, and synchronizes the two designated spindles. By commanding the phase shift amount of synchronized spindle, the phases of the reference spindle and synchronized spindle can be aligned.

| Address | Meaning | Command range (unit) | Remarks |
|---|---|---|---|
| H | Reference spindle specification<br>Select the number or name of the spindle to be used as the reference spindle from the two spindles to be synchronized. (*1) | For spindle number:<br>1 to n<br>(n: Maximum number of available spindles)<br>For spindle name:<br>1 to 9 | ♦If a value exceeding the command range or spindle No. without specifications is commanded, a program error (P35) will occur.<br>♦If there is no command, a program error (P33) will occur.<br>♦If an analog-connected spindle is commanded, a program error (P700) will occur. (*2) |

| Address | Meaning | Command range (unit) | Remarks |
|---|---|---|---|
| D | Synchronized spindle specification<br>Select the number or name of the spindle to be synchronized with the reference spindle from the two spindles to be synchronized. (*1) | For spindle number:<br>1 to n or -1 to -n<br>(n: Maximum number of available spindles)<br>For spindle name:<br>1 to 9 or -1 to -9 | ♦If a value exceeding the command range is commanded, a program error (P35) occurs.<br>♦If there is no command, a program error (P33) will occur.<br>♦If the same spindle as that commanded for the reference spindle selection is designated, a program error (P33) will occur.<br>♦The rotation direction of the synchronized spindle in respect to the reference spindle is commanded with the D sign.<br>♦If an analog-connected spindle is commanded, a program error (P700) will occur. (*2) |
| R | Phase shift amount of synchronized spindle<br>Set the shift amount from the synchronized spindle's reference position ("one rotation" signal). | 0 to 359.999 (°)<br>or<br>0 to 359999<br>(°* $10^{-3}$) | ♦If a value exceeding the command range is commanded, a program error (P35) occurs.<br>♦The commanded shift amount will be effective in the clockwise direction of the reference spindle.<br>♦Minimum resolution of commanded shift amount<br>Semi-close case (Gear ratio: 1:1 only)<br>360/4096 [°]<br>Full-close case<br>(360/4096) * K [°]<br>(K: Gear ratio of spindle and encoder)<br>♦If there is no R command, phase alignment will not be carried out. |
| A | Spindle synchronization acceleration/deceleration time constant<br>Command the acceleration/deceleration time constant for when the spindle synchronization command rotation speed changes.<br>(Command this to accelerate or decelerate at a speed slower than the time constant set in the parameters.) | 0.001 to 9.999 (s)<br>or<br>1 to 9999 (ms) | ♦If a value exceeding the command range is commanded, a program error (P35) occurs.<br>♦If the commanded value is smaller than the acceleration/deceleration time constant set with the parameters, the value set in the parameters will be applied. |

(*1) There are two spindle command methods: spindle number method and spindle name method.
Command with the spindle names, only when all spindles are set with the spindle name parameter (#3077 Sname) (from 1 to 9). For others, command with the spindle number. These settings depend on the MTB specifications.

(*2) The available spindle type and connection method depend on the specifications of your machine tool.

### Canceling spindle synchronization

| | |
|---|---|
| **G113 ;** | **(When the spindle synchronization status of all sets is canceled)** |

**Note**

(1) An axis that involves any travel cannot be put in the same block as the Spindle synchronization cancel command. Doing so causes the program error (P33) when the cancel command is issued, which causes automatic operation to pause.

(2) In lathe system, spindle synchronization can also be canceled with G113.1 in addition to G113. At the G code list 6 or 7, only G113.1 is available for the spindle synchronization cancel command.

Spindle synchronization cancel (G113) cancels the synchronous state of the two spindles rotating in synchronization with the spindle synchronization command.

## Detailed description

### Rotation speed and rotation direction

(1) The rotation speed and rotation direction of the reference spindle and synchronized spindle during spindle synchronization are the rotation speed and rotation direction commanded for the reference spindle. Note that the rotation direction of the synchronized spindle can be reversed from the reference spindle through the program.

(2) The reference spindle's rotation speed and rotation direction can be changed during spindle synchronization.

(3) If spindle stop is commanded for the synchronized spindle during spindle synchronization, the synchronized spindle rotation will stop.
The "Spindle rotation speed synchronization completion" signal (FSPRV) and the "Spindle phase synchronization completion" signal (FSPPH) are turned OFF.

(4) The rotation speed command (S command) and constant surface speed control are invalid for the synchronized spindle during spindle synchronization. Note that the modal is updated, so these will be validated when the spindle synchronization is canceled.

(5) The constant surface speed can be controlled by issuing a command to the reference spindle even during spindle synchronization.

### Rotation synchronization

(1) When rotation synchronization control (command with no R address) is commanded with the G114.1 command, the synchronized spindle rotating at an arbitrary rotation speed will accelerate or decelerate to the rotation speed commanded beforehand for the reference spindle, and will enter the rotation synchronization state.

(2) If the reference spindle's commanded rotation speed is changed during the rotation synchronization state, acceleration/deceleration will be carried out while maintaining the synchronization state following the spindle acceleration/deceleration time constants set in the parameters, and the commanded rotation speed will be achieved.

(3) In the rotation synchronization state, the reference spindle can be controlled at a constant surface speed even when two spindles are grasping one workpiece.

(4) The following type of operation will take place.

| | |
|---|---|
| M23 S2=750 ; | Forward rotate the 2nd spindle (synchronized spindle) at 750 r/min (speed command). (a) |
| : | |
| M03 S1=1000 ; | Forward rotate the 1st spindle (reference spindle) at 1000 r/min (speed command). (b) |
| : | |
| G114.1 H1 D-2 ; | Synchronize the 2nd spindle (synchronized spindle) with the 1st spindle (reference spindle) by reverse run. (c) |
| : | |
| S1=500 ; | Change the rotation speed of the 1st spindle (reference spindle) to 500 r/min. (d) |
| : | |
| G113 ; | Cancel the spindle synchronization. (e) |

<Operation>

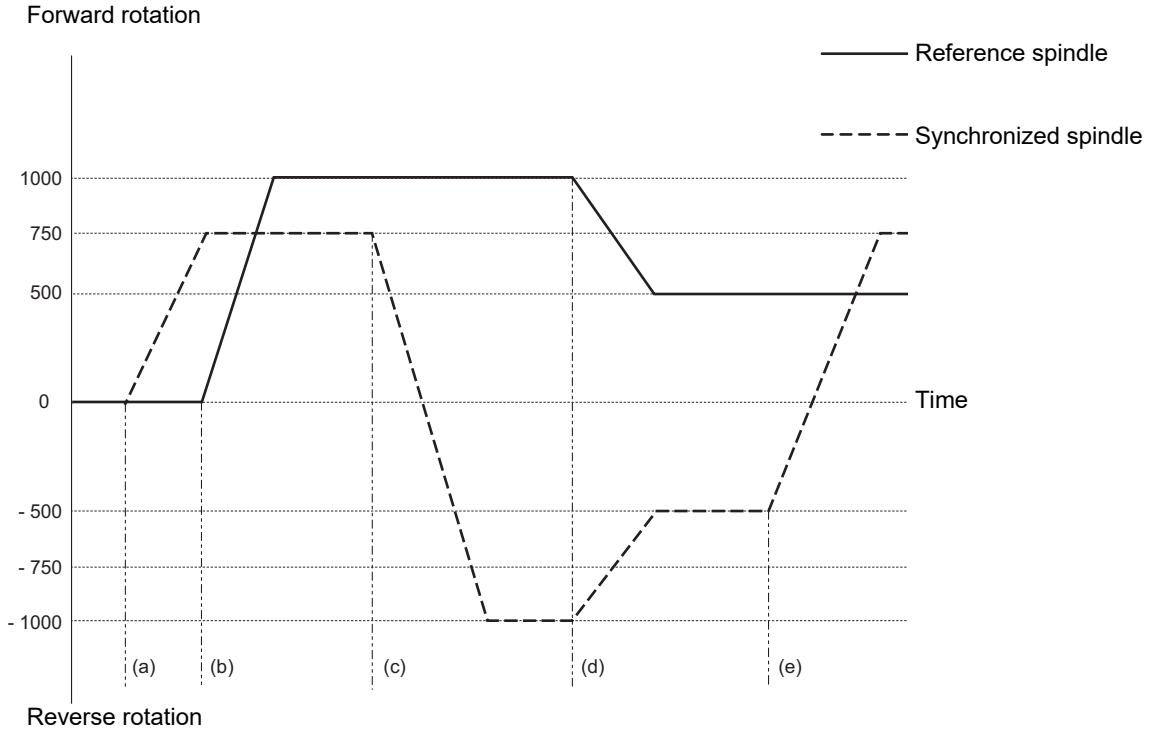

### Phase synchronization

(1) When phase synchronization (command with R address) is commanded with the G114.1 command, the synchronized spindle rotating at an arbitrary rotation speed will accelerate or decelerate to the rotation speed commanded beforehand for the reference spindle, and will enter the rotation synchronization state. Then, the phase is aligned so that the rotation phase commanded with the R address is reached, and the phase synchronization state is entered.

(2) If the reference spindle's commanded rotation speed is changed during the phase synchronization state, acceleration/deceleration will be carried out while maintaining the synchronization state following the spindle acceleration/deceleration time constants set in the parameters, and the commanded rotation speed will be achieved.

(3) In the phase synchronization state, the reference spindle can be controlled at the constant surface speed even when two spindles are grasping one workpiece.

(4) The following type of operation will take place.

| | |
|---|---|
| M23 S2=750 ; | Forward rotate the 2nd spindle (synchronized spindle) at 750 r/min (speed command). (a) |
| : | |
| M03 S1=1000 ; | Forward rotate the 1st spindle (reference spindle) at 1000 r/min (speed command). (b) |
| : | |
| G114.1 H1 D-2 R0; | Synchronize the 2nd spindle (synchronized spindle) with the 1st spindle (reference spindle) by reverse run. (c)<br>Shift the phase of synchronized spindle by the value commanded with "R". (d) |
| : | |
| S1=500 ; | Change the rotation speed of the 1st spindle (reference spindle) to 500 r/min. (e) |
| : | |
| G113 ; | Cancel the spindle synchronization. (f) |

<Operation>

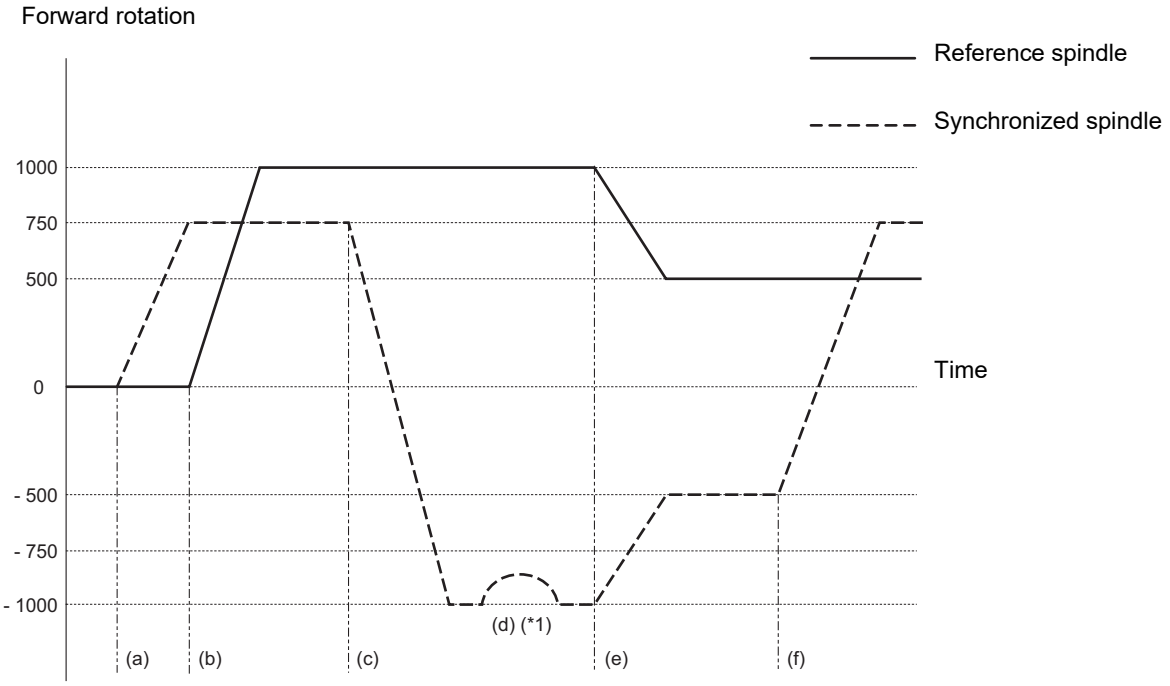


(*1) Phase synchronization is performed with the step alignment method (without acceleration/deceleration) when "#3130 syn_spec/bit1" = "0", and with the multi-step acceleration/deceleration method (described later) when "#3130 syn_spec/bit1" = "1".

**Operation when the "phase shift amount change during spindle synchronization" command is issued [C80]**

(1) When the "phase shift amount change during spindle synchronization" command (G114.1 D_ R_) is issued to change the phase shift amount of the spindle, for which the rotation or phase has already synchronized by the G114.1 command, the phase is aligned so that the rotation phase commanded with the R address is reached, and the phase synchronization state is entered.

The following type of operation will take place.

| | |
|---|---|
| N01 M23 S2=750; | Forward rotate the 2nd spindle (synchronized spindle) at 750 r/min (speed command). (a) |
| : | |
| N10 M03 S1=1000; | Forward rotate the 1st spindle (reference spindle) at 1000 r/min (speed command). (b) |
| : | |
| N20 G114.1 H1 D-2 Rxx; | Synchronize the 2nd spindle (synchronized spindle) with the 1st spindle (reference spindle) by reverse run. (c) |
| : | Shift the phase of synchronized spindle by the value commanded with "R". (d) |
| N25 Mzz; | Wait until phase synchronization is completed. |
| : | (An M code is used to check the completion of spindle phase synchronization) |
| N30 G114.1 D2 Ryy; | Shift the phase of the 2nd spindle (synchronized spindle) by the value commanded with "R". (e) |
| : | |
| N40 S1=500; | Change the rotation speed of the 1st spindle (reference spindle) to 500 r/min. (f) |
| : | |
| N50 G113; | Cancel the spindle synchronization. (g) |

<Operation>

Rotation speed (r/min)

Forward rotation

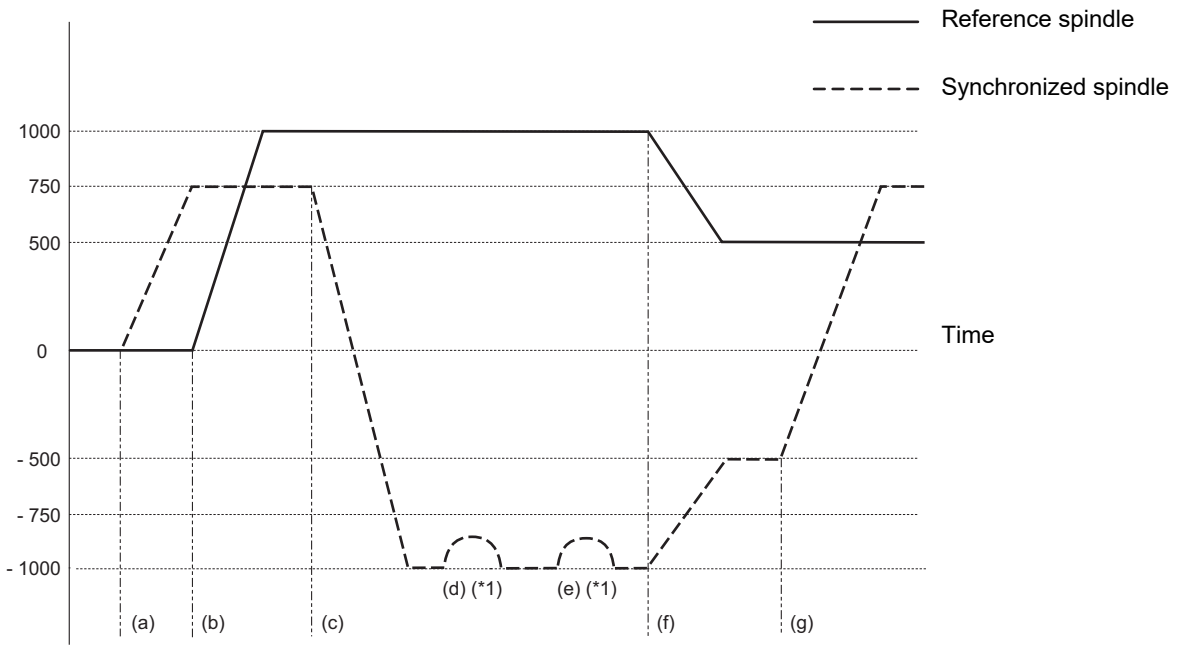


Reverse rotation

(*1) Phase synchronization is performed with the step alignment method when "#3130 syn_spec/bit1" = "0", and with the multi-step acceleration/deceleration method (described later) when "#3130 syn_spec/bit1" = "1".

(2) The operation to be performed when the "phase shift amount change during spindle synchronization" command (G114.1 D_ R_) is issued varies depending on conditions, for example, whether spindle synchronization has started.

| | | Phase shift amount (When "start" command (*1) is issued) | | State in which the spindle synchronization "start" command is not executed. |
|---|---|---|---|---|
| | | "R" is omitted. (G114.1 H_ D_) | "R" is specified. (G114.1 H_ D_ R_) | |
| Phase shift amount (When "change" command (*2) is issued) | "R" is omitted. (G114.1 D_) | Unchanged as specified when the start command (*1) is issued. | The phase remains unchanged with the shift amount specified when the start command (*1) is issued. | (Program error (P33)) |
| | "R" is specified. (G114.1 D_ R_) | The phase shift is carried out in accordance with the change command (*2). | | |

(*1) Spindle synchronization start command

(*2) Command to change the phase shift amount during spindle synchronization

## Spindle synchronization phase shift amount calculation function

The spindle phase shift amount calculation function obtains and saves the phase difference of the reference spindle and synchronized spindle by turning the "PLC" signal ON when the phase synchronization command is executed. When the phase is positioned to the automatically saved phase difference before executing the phase synchronization control command, phases can be aligned easier when re-grasping profile materials.

**[Saving the phase difference between reference spindle and synchronized spindle]**

(1) Set a profile material in the reference spindle.
(2) Set the profile material in the synchronized spindle.
(3) Turn the "phase shift calculation request" signal (SSPHM) ON.
(4) Input a rotation command, with 0 speed, for the reference spindle and synchronized spindle.
<Example> M3 S1=0 M24 S2 = 0;
(5) Execute the rotation synchronization command (with no R address command).
<Example> G114.1 H1 D-2;
(6) Rotate the reference spindle at the speed actually used when re-grasping.
<Example> S1 = 3000;
(7) Check that the phase difference has been saved by looking at the "spindle speed synchronization complete" signal.
(8) Stop both spindles.
(9) Turn the "phase shift calculation request" signal OFF.

Reference spindle

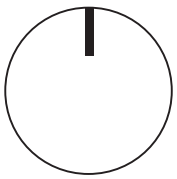

Synchronized spindle

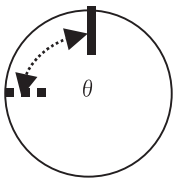


θ: Saved phase difference

<Example of operation>

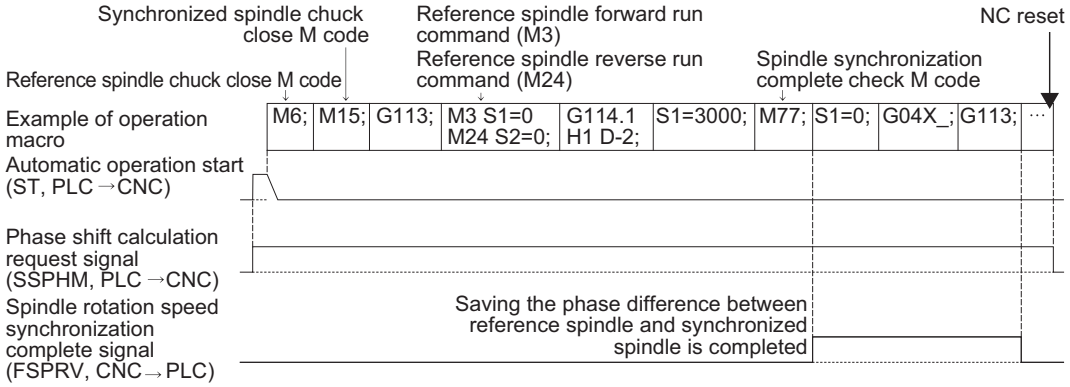


**[Automatic phase alignment of reference spindle and synchronized spindle]**

(1) Turn the "phase offset request" signal ON.

(2) Issue the phase synchronization command (with R command).
<Example> G114.1 H1 D-2 R0;

(3) The phase is aligned by offsetting the phase synchronization command by the phase difference obtained with the spindle synchronization phase shift calculation function. The state in which the phase shift amount of synchronized spindle, designation R value, is "0", is the same as the reference state (state obtained with "phase shift calculation request" signal).

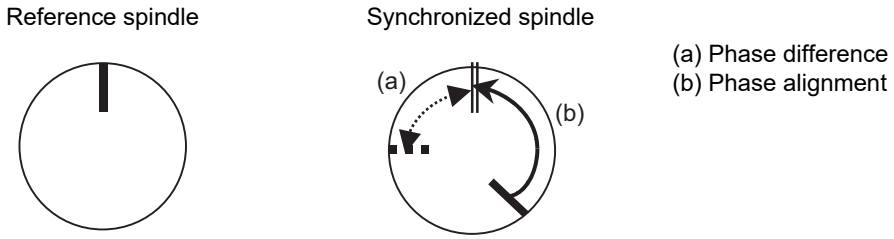


<Example of operation>

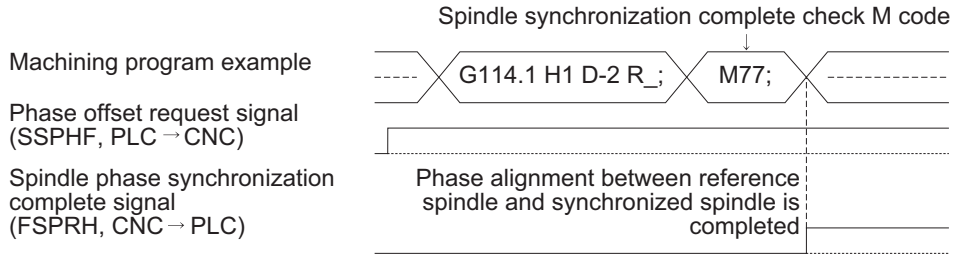

### Multi-step acceleration/deceleration

Acceleration/deceleration time constants for up to eight steps can be selected according to the spindle rotation speed for the acceleration/deceleration during spindle synchronization.
The acceleration/deceleration in each step is as follows.

Time required from minimum rotation speed to maximum rotation speed in each step
= [Time constant without multi-step acceleration/deceleration] * [magnification of time constant in each step]
* [Rate of rotation speed width in each step respect to rotation speed width up to limit rotation speed]

**Note**

(1) When the "A" address is designated at G114.1 command, the time is obtained with the "A" address instead of "spt" in the formula below.

Time required for spindle to rotate with the rotation speed set in "sptc 1" from stopped state (a)
= spt * sptc1 / slimit
Time required for spindle to reach the rotation speed set in "sptc2" from the speed of "sptc1" (b)
= spt * spdiv1 * (sptc2 - sptc1) / slimit
Time required for spindle to reach the rotation speed set in "sptc3" from the speed of "sptc2" (c)
= spt * spdiv2 * (sptc3 - sptc2) / slimit
Time required for spindle to reach the rotation speed set in "sptc4" from the speed of "sptc3" (d)
= spt * spdiv3 * (sptc4 - sptc3) / slimit
Time required for spindle to reach the rotation speed set in "sptc5" from the speed of "sptc4" (e)
= spt * spdiv4 * (sptc5 - sptc4) / slimit
Time required for spindle to reach the rotation speed set in "sptc6" from the speed of "sptc5" (f)
= spt * spdiv5 * (sptc6 - sptc5) / slimit
Time required for spindle to reach the rotation speed set in "sptc7" from the speed of "sptc6" (g)
= spt * spdiv6 * (sptc7 - sptc6) / slimit
Time required for spindle to reach the rotation speed set in "slimit" from the speed of "sptc7" (h)
= spt * spdiv7 * (slimit - sptc7) / slimit

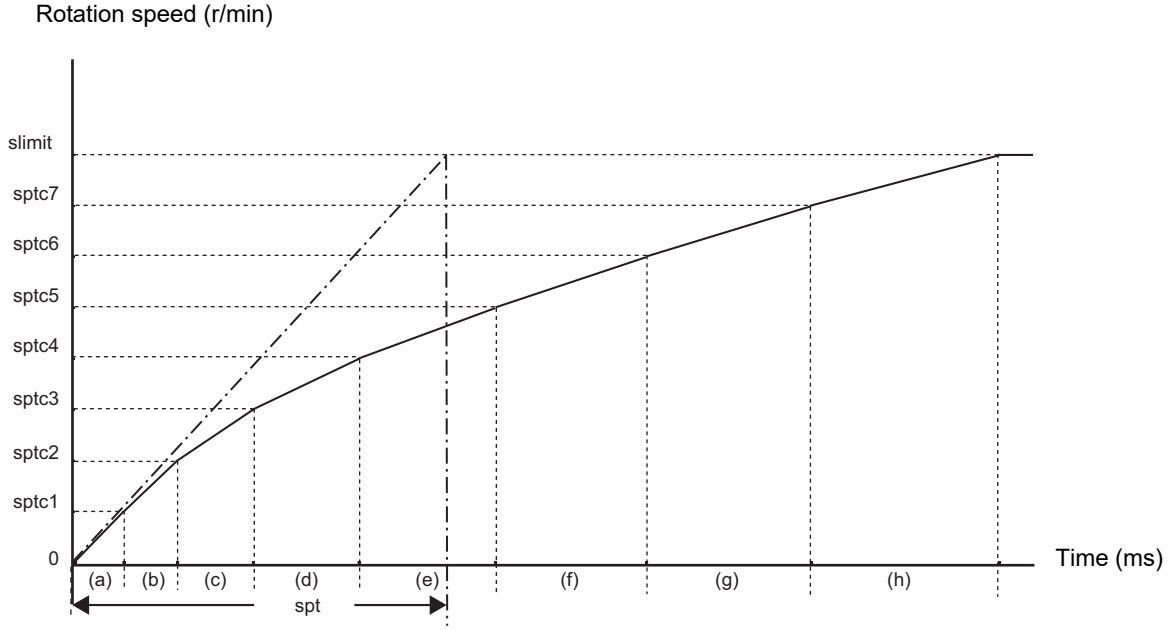


To decrease the number of acceleration/deceleration steps during spindle synchronization, set one of the following for the unnecessary step.

- Magnification for time constant changeover speed (spdiv7 to spdiv1) = 0 (or 1)
- Spindle synchronous multi-step acceleration/deceleration changeover speed (sptc7 to sptc1) = Limit rotation speed (slimit) or higher

## Relationship with other functions

### "Spindle orientation" signal (ORC)

- The spindle orientation is carried out with the spindle orientation command for the reference spindle while the spindle synchronization status remains kept. The spindle orientation command is ignored for the synchronized spindle. The multi-step orientation command or indexing command is also enabled.
- The "spindle orientation command" signal (ORC) for the reference spindle in the C axis mode is ignored during spindle synchronization. However, if the spindle position control command (C axis mode switch command) is issued during spindle orientation, the mode is switched to the C axis mode.

The "spindle orientation" signal operation depends on the MTB specifications. Refer to the instruction manual issued by the MTB for details.

### Switching the spindle gear

- Gear switching is enabled while the reference spindle is in the spindle mode.
- Gear switching is disabled while the reference spindle is in the C axis mode or in process of spindle orientation. Switching to the C axis mode or the spindle orientation cannot be carried out during gear switching. After gear switching has been completed, the mode is switched to the C axis mode.

### Spindle superimposition control

- If the reference spindle or the superimposed spindle under spindle superimposition is switched to the C axis mode, it causes an operation error (M01 1026).
- Also, if the spindle superimposition command is issued to the spindle in the C axis mode, it causes an operation error (M01 1026).
- The alarm can be reset by the spindle superimposition cancel command or canceling the C axis mode.

### Tool spindle synchronization IA/IB (spindle-spindle, polygon)

- If the rotary tool axis (spindle) or the workpiece axis (spindle) under tool spindle synchronization is switched to the C axis mode, it causes an operation error (M01 1026).
- Also, if the rotary tool axis command or workpiece axis command is issued to the spindle in the C axis mode, it causes an operation error (M01 1026). The alarm can be reset by the spindle synchronization cancel command or canceling the C axis mode.

### Tool spindle synchronization IC (spindle-NC axis, polygon)

- If the workpiece axis (spindle) under tool spindle synchronization is switched to the C axis mode, it causes an operation error (M01 1026).
- Also, if the workpiece axis command of tool spindle synchronization IC is issued to the reference spindle in the C axis mode, it causes an operation error (M01 1026). The alarm can be reset by the spindle synchronization cancel command or canceling the C axis mode.
- If necessary, the C axis under spindle synchronization can be set to a tool axis (NC axis). Make sure to switch to the C axis mode before issuing the tool spindle synchronization IC command.

### Spindle override

- The reference position return operation at C axis mode switch command for the reference spindle and the spindle override in the C axis mode are invalid.
- The cutting feed override or rapid traverse override of the NC axes is valid in the C axis mode.
- The spindle override is invalid while the reference spindle is in process of spindle orientation or spindle indexing.

### Guide bushing spindle synchronization

- The spindle synchronization (for both the reference and synchronized spindles) using the reference spindle under guide bushing spindle synchronization is enabled.
  However, the spindle position control (spindle/C axis control), spindle orientation control, spindle forward run indexing, or spindle reverse run indexing is enabled for the reference spindle under spindle synchronization only when the reference spindle under guide bushing spindle synchronization is commanded to the reference spindle under spindle synchronization.
  (If the reference spindle under guide bushing spindle synchronization is commanded to the synchronized spindle under spindle synchronization control, it causes an operation error (M01 1026) or operation error (M01 1005)).

### Spindle clamp speed setting

- The maximum clamp rotation speed specified with the address S following G92 is valid for the reference or synchronized spindle.
- The minimum clamp rotation speed specified with the address Q following G92 is valid for the reference spindle, but invalid for the synchronized spindle. If the rotating spindle is set to the synchronized spindle at the minimum clamp rotation speed, the minimum rotation speed clamp is canceled, and the spindle rotates at the commanded rotation speed. If the spindle synchronization control state is canceled, the minimum clamp rotation speed is enabled.

### Synchronous tapping cycle

- The synchronous tap spindle cannot be commanded as the reference spindle or synchronized spindle of the spindle synchronization I. If such a command is issued, an operation error (M01 1007) occurs, causing the automatic operation to be paused.
- You cannot command a synchronous tapping that uses the reference spindle or synchronized spindle of spindle synchronization I. If such a command is issued, an operation error (M01 1139) occurs, causing the automatic operation to be paused.

## Precautions

(1) The spindle rotating with spindle synchronization control will stop when emergency stop is applied.

(2) The rotation speed clamp during spindle synchronization will follow the smaller clamp value set for the reference spindle or synchronized spindle.

(3) Orientation of the reference spindle and synchronized spindle is not possible during the spindle synchronization mode. To carry out orientation, cancel the spindle synchronization mode first.

(4) The rotation speed command (S command) is invalid for the synchronized spindle during the spindle synchronization mode. However, the modal will be updated, therefore this command will be validated when spindle synchronization is canceled.

(5) The constant surface speed control is invalid for the synchronized spindle during the spindle synchronization mode. However, the modal will be updated, therefore this command will be validated when spindle synchronization is canceled.

(6) The rotation speed command (S command) and constant surface speed control for the synchronized spindle will be validated when spindle synchronization is canceled. Thus, the synchronized spindle may carry out different operations when this control is canceled.

(7) If the phase difference is not obtained with the "phase shift calculation request" signal and the phase synchronization command is executed by turning the "phase offset request" signal ON, the phase shift amount will not be calculated correctly.

(8) The spindle Z phase encoder position parameter "#3035 sppst" is invalid when using the spindle synchronization phase shift amount calculation function. (It is ignored.)
The spindle Z phase encoder position parameter "#3035 sppst" is valid when the "phase offset request" signal is OFF.

(9) If the phase synchronization command (command with R address) is issued while the "phase shift calculation request" signal is ON, an operation error (1106) occurs.

(10) If the "phase shift calculation request" signal is ON and the reference spindle or synchronized spindle is rotation while rotation synchronization is commanded, an operation error (1106) occurs.

(11) If the phase synchronization command R0 (<Ex.> G114.1 H1 D-2 R0) is commanded while the "phase offset request" signal is ON, the spindle phases between reference spindle and synchronized spindle will be aligned to the phase difference of the reference spindle and synchronized spindle saved in the NC memory.

(12) If a value other than the phase synchronization command R0 (<Ex.> G114.1 H1 D-2 R100) is commanded while the "phase offset request" signal is ON, the phase difference obtained by adding the value commanded with the R address command to the phase difference of the reference spindle and synchronized spindle saved in the NC memory will be used to align the reference spindle and synchronized spindle.

(13) The "phase offset request" signal will be ignored when the "phase shift calculation request" signal is ON.

(14) The phase difference of the reference spindle and synchronized spindle saved in the NC is valid only when the "phase shift calculation" signal is ON and for the combination of the reference spindle selection (H_) and synchronized spindle selection (D_) commanded with the rotation synchronization command (no R address). For example, if the phase difference between reference spindle and synchronized spindle is saved as "G114.1 H1 D-2 ;", the saved phase difference will be valid only when the "phase offset request" signal is ON and "G114.1 H1 D-2 R*** ;" is commanded. If "G114.1 H2 D-1 R*** ;" is commanded in this case, the phase shift amount will not be calculated correctly.

(15) The phase difference between reference spindle and synchronized spindle saved in the NC is held until the next spindle synchronous phase shift calculation (rotation synchronization command is completed with the "phase shift calculation request" signal ON).

(16) When the spindle synchronization commands are being issued with the PLC I/F method (#1300 ext36/bit7 OFF), a program error (P610) occurs if the spindle synchronization is commanded with G114.1/G113.

(17) Always set the "Chuck close". If the "Chuck close" is not set, an excessive load may be applied on the machine or an alarm may occur.

(18) When the spindle-mode servo is used for the reference spindle or the synchronized spindle, the spindle parameter "#13003 SP003" (PGS) and spindle-mode servo parameter "#52203 SV003" (PGN) must be set to the same value between the reference and synchronized spindles. (These settings depend on the MTB specifications.)

### Cautions on programming

(1) To enter the rotation synchronization mode while the reference spindle and synchronized spindle are chucking the same workpiece, turn the reference spindle and synchronized spindle rotation commands ON before turning the spindle synchronization mode ON.

| $1 (1st part system) | | $2 (2nd part system) | |
|---|---|---|---|
| : | | : | |
| M6; | 1st spindle chuck close | : | |
| : | | M25 S2=0; | 2nd spindle stops at S=0 |
| : | | : | |
| !2; | | !1; | Timing synchronization operation between part systems |
| M5 S1=0; | 1st spindle stops at S=0 | M15; | 2nd spindle chuck close |
| : | | M24; | 2nd spindle rotation command ON |
| M3; | 1st spindle rotation command ON | : | |
| !2; | | !1; | Timing synchronization operation between part systems |
| : | | G114.1 H1 D-2; | Rotation synchronization mode ON |
| : | | : | |
| S1=1500; | Synchronous rotation at S=1500 | : | |
| : | | : | |
| S1=0; | Both spindles stop | | |
| G113; | Synchronization mode cancel | | |

(2) To chuck the same workpiece with the reference spindle and synchronized spindle in the phase synchronization mode, align the phases before chucking.

| $1 (1st part system) | | $2 (2nd part system) | |
|---|---|---|---|
| : | | : | |
| M6; | 1st spindle chuck close | : | |
| : | | : | |
| M3 S1=1500; | 1st spindle rotation command ON | : | |
| : | | G114.1 H1 D-2 R0; | Phase synchronization mode ON |
| : | | : | |
| : | | M24; | 2nd spindle rotation command ON |
| : | | : | |
| : | | M15; | 2nd spindle chuck close (*1) |
| : | | : | |

(*1) Close the chuck after confirming that the "spindle phase synchronization completion" signal has turned ON (phase alignment complete).

(3) (Only for M8 series) When the spindle synchronization control is commanded and if the "start" signal of the synchronized spindle is not input, turn the servo ON for the synchronized spindle and accelerate or decelerate the spindle rotation up to the commanded speed of the reference spindle. Whether the linear acceleration/deceleration or multi-step acceleration/deceleration is used as the acceleration/deceleration depends on the MTB specifications (parameter "#1255 set27/bit6").

However, when the synchronized spindle is the reference spindle of guide bushing spindle synchronization or spindle-mode servo, multi-step acceleration/deceleration is applied regardless of the parameter setting.

### ⚠ CAUTION

⚠ **Do not make the synchronized spindle rotation command OFF with one workpiece chucked by the reference spindle and synchronized spindle during the spindle synchronization mode. Failure to observe this may cause the synchronized spindle stop, and hazardous situation.**

## 18.1.2 Precautions for Using Spindle Synchronization Control

### Precautions

Some PLC signals must be set when spindle synchronization control I or II is used. If these signals are not set, an excessive load or an alarm may occur. Refer to the instruction manual issued by the MTB for details. In this section, each function and the signal are explained.

#### Chuck close signal

The synchronized spindle side carries out droop compensation while the chuck is opened, and aligns itself with the reference spindle. However, when the chuck is closed, the droop compensation is added, and the synchronization error with the base increases. Droop compensation is prevented with the chuck close signal and the position where the chuck is grasped is maintained with position compensation.

| Device No. | Signal name | Abbreviation | Description |
|---|---|---|---|
| Y18B9 | Chuck close | - | This turns ON when the chuck is closed. When this signal turns ON, the compensation between the reference spindle and synchronized spindle will change from droop compensation to position compensation. |
| X18AC | Chuck close confirmation | - | This turns ON when the chuck close signal is received during the spindle synchronization mode. |

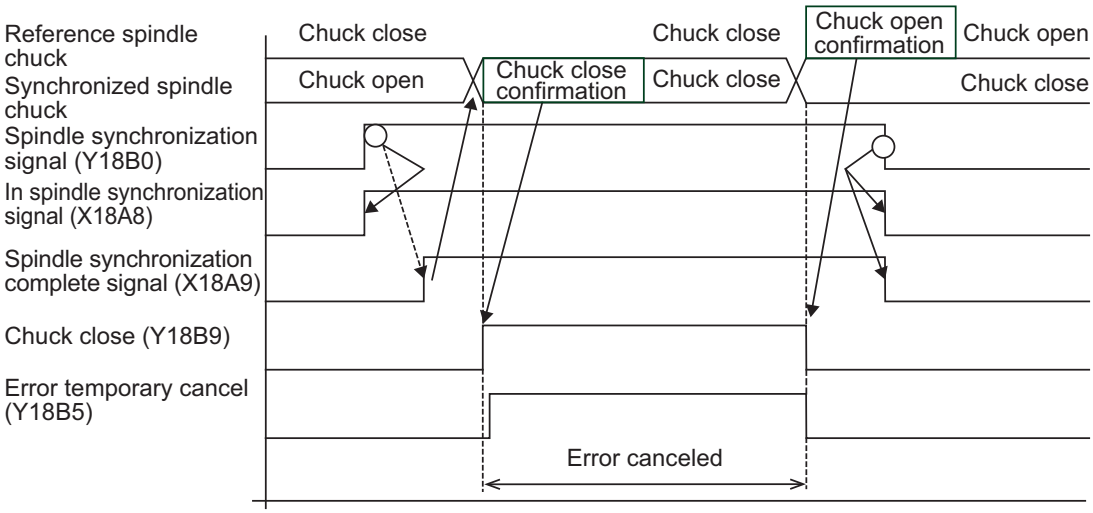


**Note**

(1) Use the error temporary cancel only when there is still an error between the spindle and synchronization with the chuck close signal.

#### Error temporary cancel function

When spindle synchronization is carried out while grasping the workpiece with the reference spindle and rotating, if the chuck is closed to grasp the workpiece with the synchronized spindle, the speed will fluctuate due to external factors and an error will occur. If spindle synchronization is continued without compensating this error, the workpiece will twist.

This torsion can be prevented by temporarily canceling this error.

| Device No. | Signal name | Abbreviation | Description |
|---|---|---|---|
| Y18B5 | Error temporary cancel | SPDRP0 | The error is canceled when this signal is ON. |

### Phase error monitor

The phase error can be monitored during spindle phase synchronization.

| Device No. | Signal name | Abbreviation | Description |
|---|---|---|---|
| R6519 | Phase error monitor | - | The phase error during spindle phase synchronization control is output as a pulse unit. |
| R6520 | Phase error monitor (lower limit value) | - | The lower limit value of the phase error during spindle phase synchronization control is output as a pulse unit. |
| R6521 | Phase error monitor (upper limit value) | - | The upper limit value of the phase error during spindle phase synchronization control is output as a pulse unit. |

### Multi-step acceleration/deceleration

Up to eight steps of acceleration/deceleration time constants for spindle synchronization can be selected according to the spindle rotation speed.

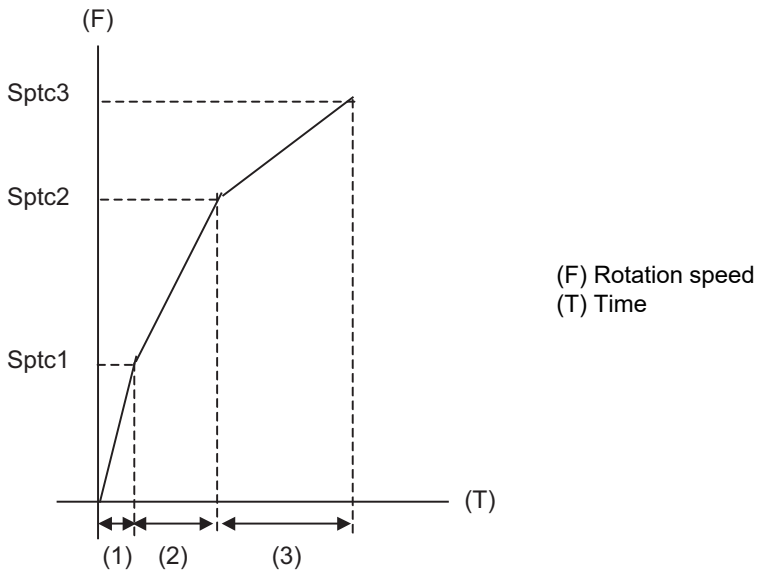


(1) Time required from stopped state to sptc1 setting rotation speed
spt * (sptc1/maximum rotation speed)

(2) Time required from sptc1 to sptc2 setting rotation speed
spt * ((sptc2-sptc1)/maximum rotation speed) *spdiv1

(3) Time required from sptc2 to sptc3 setting rotation speed
spt * ((sptc3-sptc2)/maximum rotation speed) *spdiv2

## 18.1.3 Spindle Position Control (Spindle/C Axis Control) under Spindle Synchronization Control

### Function and purpose

This function enables the spindle position control (spindle/C axis control) by the reference spindle in spindle synchronization control mode.
The reference spindle can be controlled as the rotary axis while the spindle synchronization status remains kept, and also positioning or interpolation with another NC axis is enabled by issuing the position command (movement command) in the same way as for the NC axis.
There are two methods: PLC signal method and program command method to switch the spindle and rotary axis during spindle synchronization control. The method that is applied for switching depends on the MTB specifications (parameter "#3129 cax_spec/bit0").
This section describes the program command method.
In this manual, the state to control an axis as a spindle is referred to as "spindle mode", and the state to control an axis as a rotary axis as "C axis mode".
For details about the spindle position control (spindle/C axis control) function, refer to "10.5 Spindle Position Control (Spindle/C Axis Control)".
This section also describes considerations to perform the spindle position control (spindle/C axis control) under spindle synchronization, and the status of various PLC signals and restrictions. The status, control method, and operation of the PLC signal depend on the MTB specifications.

## Detailed description

### Program command method

The machining program switches the reference spindle to the C axis mode with G00 command, and to the spindle mode with S command. The C axis servo OFF signal (*SVFn) must be kept ON while the program command method is selected.

When the program command method is selected, switching operation is performed only with the reference position return type.

The following shows the C axis switching sequence under spindle synchronization.

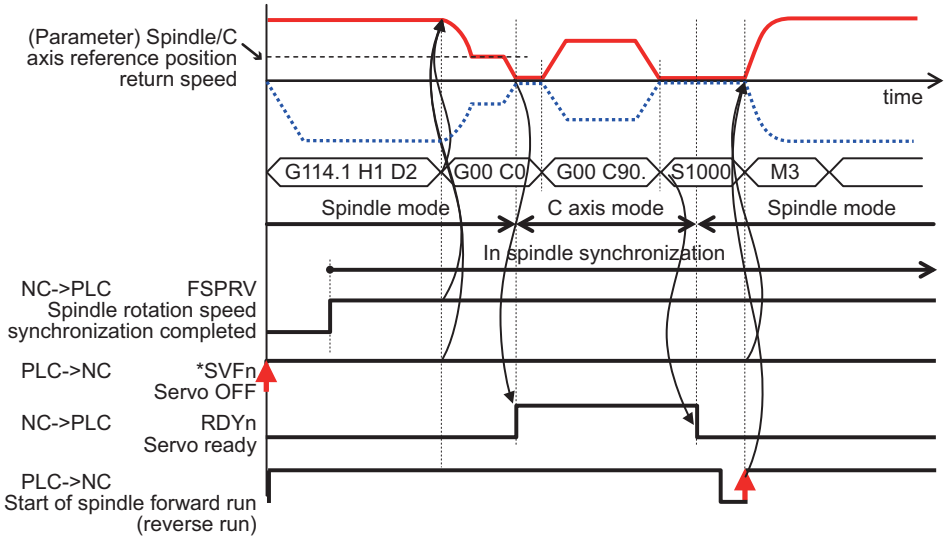


<Spindle control mode under spindle synchronization to C axis control mode switching>

(1) If "G00 C_" is commanded on the program when the reference spindle under spindle synchronization is in the spindle mode, the spindle is directly located at the position commanded by the reference spindle while the synchronous status remains kept.

(2) Only the G00 command is valid to switch the mode. If the C axis movement is commanded with the G code other than G00, it causes a program error (P430).

(3) The spindle position control (spindle/C axis control) axis must be commanded with the absolute position address or absolute command (G90). If the incremental position address or incremental command (G91) is used, it causes a program error (P32).

(4) In the switching specifications, only the reference position return type (equivalent to "#3106 zrn_typ/bit8" = 0) is valid, and the direction to return from the rotation mode to the reference position follows the rotation direction (equivalent to "#3106 zrn_typ/bitB" = 1). The direction to return from the spindle stop state to the reference position ("#3106 zrn_typ/bitA-bit9") and interpolation mode selection ("#3106 zrn_typ/bitD-bitE ") follow the appropriate parameters.

[C axis mode switching conditions]

(1) The C axis servo OFF signal (*SVFn) of the reference spindle is set to ON when switching is commanded.

(2) The spindle rotation speed synchronization completion signal (FSPRV) is set ON for rotation synchronization, and the spindle phase synchronization completion signal (FSPPH) is set ON for phase synchronization.

<Switching from C axis control mode under spindle synchronization to spindle control mode>

(1) The switching is performed with the spindle forward run signal (SRN) ON or the spindle reverse run signal (SRI) ON and the S command.

(2) The switching is performed with the startup of the spindle forward run signal (SRN) or the spindle reverse run signal (SRI).

[Spindle mode switching condition]

(1) The C axis servo OFF signal (*SVFn) of the reference spindle is set to ON and the C axis selection signal (CMD) is set to OFF when switching is commanded.

<Operation when the "Servo OFF" signal (*SVFn) of the reference spindle is set to OFF>

(1) The mode cannot be switched from the spindle mode to the C axis mode or from the C axis mode to the spindle mode.

(2) In the spindle mode, the axis does not run as a spindle even if the forward run command (SRN) or reverse run command (SRI) is executed.

(3) In the C axis mode, an operation error (M01 0005) occurs if the movement command is executed. In the servo OFF mode, switching follows the setting of the spindle specification parameter "#1064 svof " (error correction).

## C axis mode selection command in spindle synchronization incomplete state

If the C axis mode selection command is issued until the spindle synchronization completion signal (spindle rotation speed synchronization completion (FSPRV) for rotation synchronization and spindle phase synchronization completion (FSPPH) for phase synchronization (FSPPH)) is set ON after the spindle synchronization command has been issued, the mode is switch to the C axis mode after the spindle synchronization completion signal has been set ON. The following shows the C axis mode selection command from after the spindle synchronization command has been issued to before the spindle synchronization is completed.

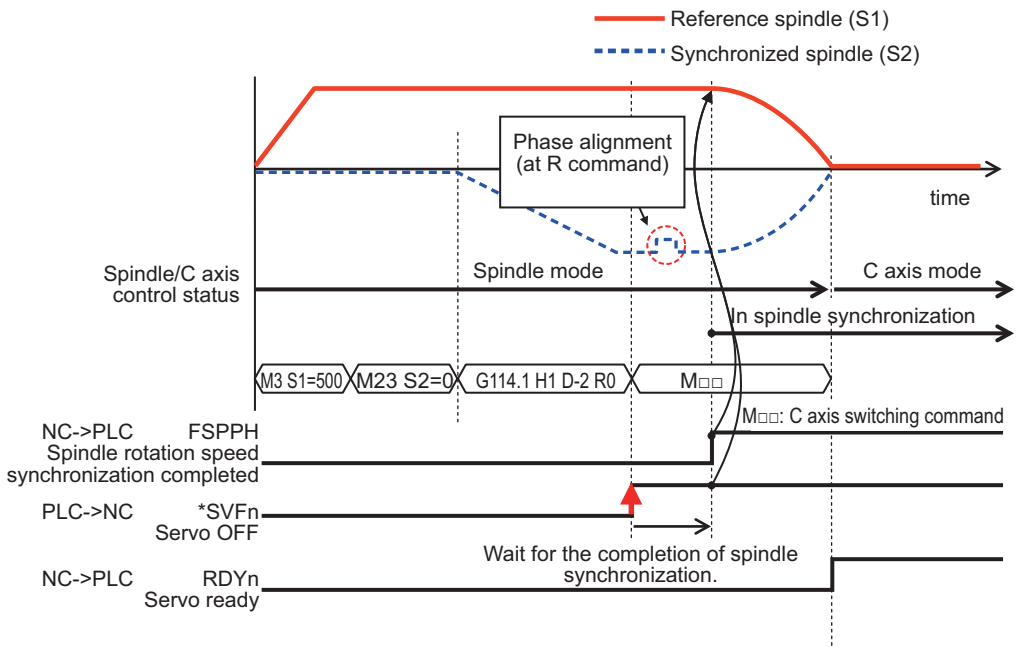

### Spindle synchronization cancel in C axis mode

The spindle synchronization is canceled while the reference spindle remains set in the C axis mode by issuing the spindle synchronization cancel command in the C axis mode or axis stop state.
The following shows the spindle synchronization cancel operation in the C axis mode.

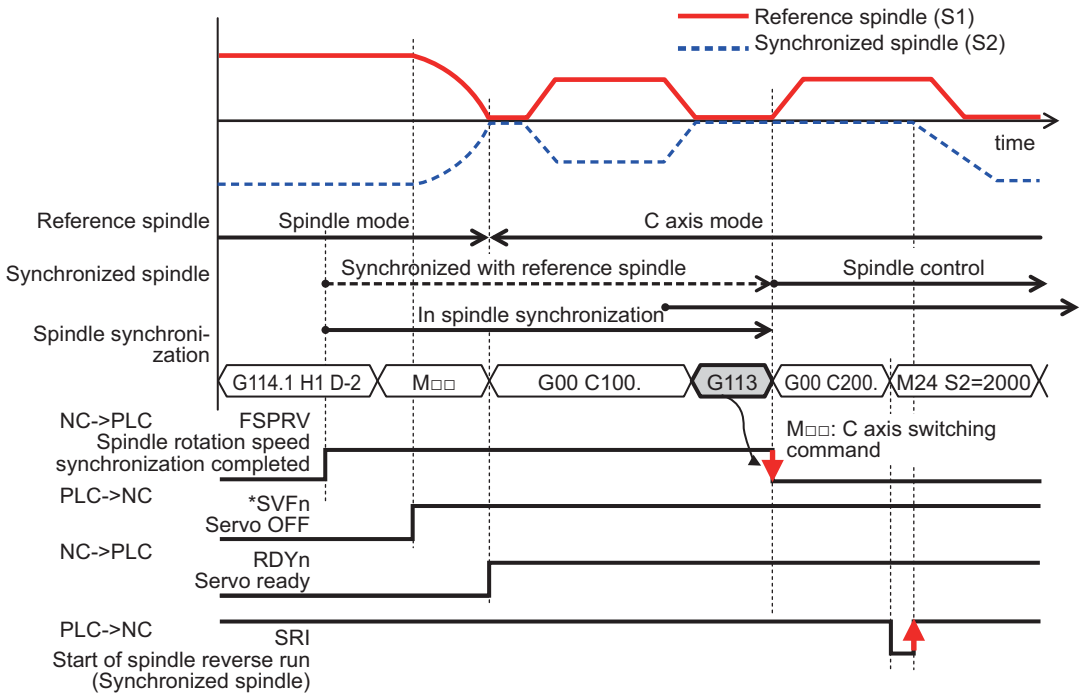


(1) If the spindle is stopped by feed hold or cutting override zero during C axis movement, the spindle synchronization control is canceled with the spindle synchronization cancel command.

(2) If the C axis is in process of movement when the spindle synchronization cancel command is issued, it causes an operation error (M01 1135), and the spindle synchronization cancel operation is not completed. When the movement of the C axis is completed and the C axis is set to the smoothing zero, the operation error is canceled, and the spindle synchronization cancel operation is completed.

### Spindle synchronization command using the spindle in the C axis mode as the reference spindle

(1) When a spindle that is not in the spindle synchronization state is set in the C axis control mode, if the spindle synchronization command is issued using the spindle as the reference spindle, it causes an operation error (M01 1026).

## Relationship with other functions

### Function that can be commanded by the spindle position control (spindle/C axis control) under spindle synchronization control

When the reference spindle is in the C axis control state, the synchronized spindle synchronizes with the reference spindle in the spindle control state without being setting in the C axis control state.

| Contents of command | Operation |
|---|---|
| Milling interpolation (G12.1/G13.1) | ♦ The reference spindle in the C axis mode can be used as the rotary axis for milling interpolation. |
| C axis selection command OFF | ♦The reference spindle is switched to the C axis mode, but the synchronized spindle is kept in the synchronous state. |
| Spindle synchronization cancel command (G113/G113.1) | ♦Cancels the spindle synchronization control.<br>♦If the spindle synchronization cancel command is issued during movement of the C axis, it causes an operation error (M01 1135), and the spindle synchronization is not canceled. When the operation error is canceled after the C axis has stopped, the spindle synchronization control is also canceled. |
| Tool spindle synchronization II (Hobbing) (G114.3) | ♦When the Multiple spindle synchronization set control function is enabled, the reference spindle in C axis mode can be specified as the workpiece axis of Tool spindle synchronization II. For details, refer to "18.5 Multiple Spindle Synchronization Set Control".<br>♦Also, if the reference spindle in C axis mode is specified as the hob axis (spindle) of tool spindle synchronization II, an operation error (M01 1005) will occur. |
| Mixed control (cross axis control) (G110)<br>Arbitrary axis exchange control (G140) | ♦The spindle set to the spindle/C axis can be exchanged even when it is in the C axis mode or spindle mode.<br>♦When the C axis is designated as the spindle with gain switching valid (parameter "#3129 cax_spec/bit4") in the MTB specifications, the gain of all NC axes in the destination part system is switched by exchanging the C axis. When the spindle/C axis with gain switching valid is cleared from the part system, in which the gain of all the NC axes is switched, to another part system, the gain of all NC axes in the part system is returned. |
| Control axis synchronization between part systems (G125) | ♦The control axis synchronization between part systems (reference spindle or synchronized spindle) can be commanded to the reference spindle in the C axis mode.<br>♦When the reference spindle in spindle mode is commanded as the axis related to the control axis synchronization between part systems, an operation error (M01 1037) will occur.<br>♦When the reference spindle in the C axis mode is set as the axis related to the control axis synchronization between part systems, the synchronization relation cannot be maintained if the mode is switched from the C axis mode to the spindle mode. Do not switch from the C axis mode to the spindle mode. |
| Control axis superimposition (G126)<br>Arbitrary axis superimposition (G156) | ♦The control axis superimposition or arbitrary axis superimposition can be commanded to the reference spindle in the C axis mode.<br>♦The control axis superimposition or arbitrary axis superimposition is canceled by commanding the switching from the C axis mode to the spindle mode while the reference spindle is used as the control axis superimposition or arbitrary axis superimposition related axis in the C axis mode. When the [program command method] is selected to switch between the C axis mode and spindle mode, the control axis superimposition or arbitrary axis superimposition is canceled by setting the "Servo OFF" signal (*SVFn) to OFF.<br>♦If the reference spindle is commanded as the superimposition-related axis (reference axis or superimposed axis) in the spindle mode, it causes an operation error (M01 1004). |
| Emergency stop | ♦When the spindle is set in the emergency stop state, the spindle synchronization control is canceled immediately.<br>♦If emergency stop occurs in the C axis mode, the reference or synchronized spindle decelerates and stops based on the parameter (spindle parameter "#13056 SP056 EMGt " deceleration time constant at emergency stop) that is set to each spindle. |

### Cautions on spindle position control under spindle synchronization control

(1) The upper limit of the rotation speed in the C axis mode is controlled by the rapid traverse rate (#2001 rapid) or cutting feed clamp speed (#2002 clamp) of the C axis set to the axis specification parameter; therefore, the rotation speed of the spindle motor may exceed the highest spindle rotation speed depending on the setting of the C axis rapid traverse rate or clamp speed.
The rapid traverse speed (#2001 rapid) and cutting feed clamp speed (#2002 clamp) of the C axis must not be below the highest spindle rotation speed (#3001 slimt1 to #3004 slimt4) of the reference or synchronized spindle (which depends on the MTB specifications).

**C axis rapid traverse rate (°/min) ≤ Highest spindle rotation speed (r/min) × 360(°)**

(2) If the spindle in the C axis mode is set to the reference or synchronized spindle, it causes an operation error (M01 1026). When the control mode at power-on is set to the C axis mode, switch it to the spindle mode once to command the spindle synchronization, and switch it to the C axis mode again.
The control mode at power-on depends on the MTB specifications (parameter "#3129 cax_spec/bit2").

(3) If the C axis servo OFF signal (*SVFn) of the synchronized spindle is set to ON during spindle synchronization, it causes an operation error (M01 1026).

# 18.2 Tool Spindle Synchronization I

## 18.2.1 Tool Spindle Synchronization IA (Spindle-Spindle, Polygon) ; G114.2, G113

### Function and purpose

In a machine having a rotary tool axis and having a spindle controlled as the workpiece axis, polygon machining between spindles can be carried out by controlling the rotation of the workpiece axis in synchronization with the rotary tool axis rotation.

This function cannot be combined with the following spindle synchronization functions while it is active. An operation error (M01 1005) occurs.

- Spindle synchronization I
- Spindle synchronization II
- Tool spindle synchronization IA
- Tool spindle synchronization IB (IC)
- Tool Spindle Synchronization II
- Spindle superimposition control

However, when the multiple spindle synchronization set control function is enabled, multiple spindle synchronization functions can be commanded simultaneously. The validity of this function depends on the MTB specifications (parameter "#1440 multi_sp_syn"). For details, refer to "18.5 Multiple Spindle Synchronization Set Control".

### Command format

**Tool spindle synchronization IA (Spindle-spindle, polygon mode) ON**

```
G114.2 H__ D__ E__ L__ R__ ;
```

| | |
|---|---|
| H | Rotary tool axis selection (Reference spindle) |
| D | Workpiece axis selection (Synchronized spindle) |
| E | Rotary tool axis rotation ratio designation |
| L | Workpiece axis rotation ratio designation |
| R | Phase shift amount of synchronized spindle |

**Tool spindle synchronization IA (Spindle-spindle, polygon mode) OFF**

```
G113 ; (G113.1 ;)
```

**Note**

(1) An axis address that involves any travel cannot be put in the same block as for the tool spindle synchronization IA cancel command. Doing so causes the program error (P33) when the cancel command is issued, which causes automatic operation to pause.

(2) "G113.1;" can also be used instead of "G113;".

### Explanation of address

Tool spindle synchronization IA ON (G114.2) command sets the polygon machining mode that rotates the two axes in synchronization with differing speeds by designating the rotary tool axis and workpiece axes and the rotation ratio (Number of the rotary tool gear teeth and workpiece corners) of the two designated spindles (spindle and spindle). Tool spindle synchronization IA OFF (G113) cancels the synchronous state of two synchronously rotating spindles using the spindle synchronization command.

| Address | Meaning | Command range (unit) | Remarks |
|---|---|---|---|
| H | Rotary tool axis selection<br>Command the spindle number or spindle name of the rotary tool axis from multiple spindles. (*1) | Spindle number:<br>1 to n<br>(n: Maximum number of available spindles)<br>Spindle name:<br>1 to 9 | ♦If a value exceeding the command range is commanded, a program error (P35) will occur.<br>♦If there is no command, a program error (P33) will occur.<br>♦If the same value as the D command is commanded, a program error (P33) will occur.<br>♦If an analog-connected spindle is selected, a program error (P700) will occur. (*2) |
| D | Workpiece axis selection<br>Commands the spindle number or spindle name of the workpiece axis of two spindles. (*1) | Spindle number:<br>1 to n or -1 to -n<br>(n: Maximum number of available spindles)<br>Spindle name: 1 to 9 or -1 to -9 | ♦If a value exceeding the command range is commanded, a program error (P35) will occur.<br>♦If there is no command, a program error (P33) will occur.<br>♦The rotation direction of the workpiece axis in respect to the rotary tool axis is commanded with the D sign.<br>♦If the same value as the H command is commanded, a program error (P33) will occur.<br>♦If an analog-connected spindle is selected, a program error (P700) will occur. (*2) |
| E | Rotary tool axis rotation ratio designation<br>Set the rotation ratio (Number of rotary tool gear teeth) of the rotary tool axis. | 1 to 999 | ♦If a value exceeding the command range is commanded, a program error (P35) will occur.<br>♦If there is no command, the rotation ratio will be interpreted as 1. |
| L | Workpiece axis rotation ratio designation<br>Set the rotation ratio (number of workpiece corners) of the workpiece axis. | 1 to 999 | ♦If a value exceeding the command range is commanded, a program error (P35) will occur.<br>♦If there is no command, the rotation ratio will be interpreted as 1. |
| R | Phase shift amount of synchronized spindle<br>Set the shift amount from the synchronized spindle's reference position ("one rotation" signal). | 0 to 359.999 (°) | ♦If a value exceeding the command range is commanded, a program error (P35) will occur.<br>♦The commanded shift amount will be applied in the clockwise direction in respect to the spindle.<br>♦Minimum resolution of commanded shift amount<br>Semi-close case<br>360/4096 [°]<br>Full-close case<br>(360/4096) * K [°]<br>(K: Gear ratio of spindle and encoder)<br>♦If there is no R command, phase alignment will not be carried out. |

(*1) There are two spindle command methods: spindle number method and spindle name method.
Command with the spindle names, only when all spindles are set with the spindle name parameter (#3077 Sname) (from 1 to 9). For others, command with the spindle number. These settings depend on the MTB specifications.

(*2) The available spindle type and connection method depend on the specifications of your machine tool.

## Detailed description

### Rotary axis and rotation direction

The rotary tool axis and workpiece axis rotation speed and rotation direction during tool spindle synchronization IA command are as follows.

(1) The rotation speed and rotation direction of the rotary tool axis are the rotation speed commanded with the S command and the rotation direction commanded with the M command, etc., for the spindle selected as the rotary tool axis.

(2) The workpiece axis rotation speed is determined by the number of the rotary tool gear teeth workpiece corners commanded with G114.2.

$$Sw = Sh * \frac{E}{L}$$

Sw: Workpiece axis rotation speed (r/min)
Sh: Rotary tool axis rotation speed (r/min)
E: Rotary tool axis rotation ratio (Number of rotary tool gear teeth)
L: Workpiece axis rotation ratio (Number of workpiece corners)

(3) The workpiece axis rotation direction is determined by the sign of the address D commanded with G114.2.
In other words, when the "D" sign is "+", the workpiece axis rotates in the same direction as the rotary tool axis, and when "-", the workpiece axis rotates in the reverse direction of the rotary tool axis.

(4) After tool spindle synchronization IA is commanded, the relation of the rotary tool axis and workpiece axis rotation is held in all automatic or manual operation modes until spindle synchronization cancel (G113) is commanded, the "spindle synchronization cancel" signal is input, or reset (reset 1, reset 2, reset & rewind) is executed when "#1239 set11/bit3" is set to "1".
Even during feed hold, the rotary tool axis and workpiece axis synchronization state is held.

### Spindle operation for spindle-spindle polygon

(1) Even if the forward run command and reverse run command are not issued to the workpiece axis when the tool spindle synchronization IA mode is commanded, the workpiece axis starts rotation synchronously with the rotary tool axis if the rotation command is issued to the rotary tool axis.

(2) The rotation command (S command) and constant surface speed control are invalid in respect to the workpiece axis during the tool spindle synchronization IA mode. Note that the modal will be updated, so these will be effective after the spindle synchronization is canceled.

(3) If the rotation speed commanded to the workpiece axis exceeds the maximum rotation speed of the rotary tool axis or the maximum clamp speed designated by address S following G92, the workpiece axis rotation speed is clamped to prevent the rotation speed from exceeding those maximum speeds.

### Multi-step acceleration/deceleration control

(1) Acceleration/deceleration time constants for up to eight steps can be selected according to the spindle rotation speed for the acceleration/deceleration during spindle-spindle polygon machining.
The acceleration/deceleration in each step is as follows.

Time required from minimum rotation speed to maximum rotation speed in each step
= [Time constant without multi-step acceleration/deceleration] * [magnification of time constant in each step]
* [Rate of rotation speed width in each step respect to rotation speed width up to limit rotation speed]

Time required to rotate to sptc1 set rotation speed from stopped state (a)
= spt * sptc1 / slimit
Time required to reach sptc2 set rotation speed from sptc1 (b)
= spt * spdiv1 * (sptc2 - sptc1) / slimit
Time required to reach sptc3 set rotation speed from sptc2 (c)
= spt * spdiv2 * (sptc3 - sptc2) / slimit
Time required to reach sptc4 set rotation speed from sptc3 (d)
= spt * spdiv3 * (sptc4 - sptc3) / slimit
Time required to reach sptc5 set rotation speed from sptc4 (e)
= spt * spdiv4 * (sptc5 - sptc4) / slimit
Time required to reach sptc6 set rotation speed from sptc5 (f)
= spt * spdiv5 * (sptc6 - sptc5) / slimit
Time required to reach sptc7 set rotation speed from sptc6 (g)
= spt * spdiv6 * (sptc7 - sptc6) / slimit
Time required to reach slimit set rotation speed from sptc7 (h)
= spt * spdiv7 * (slimit - sptc7) / slimit

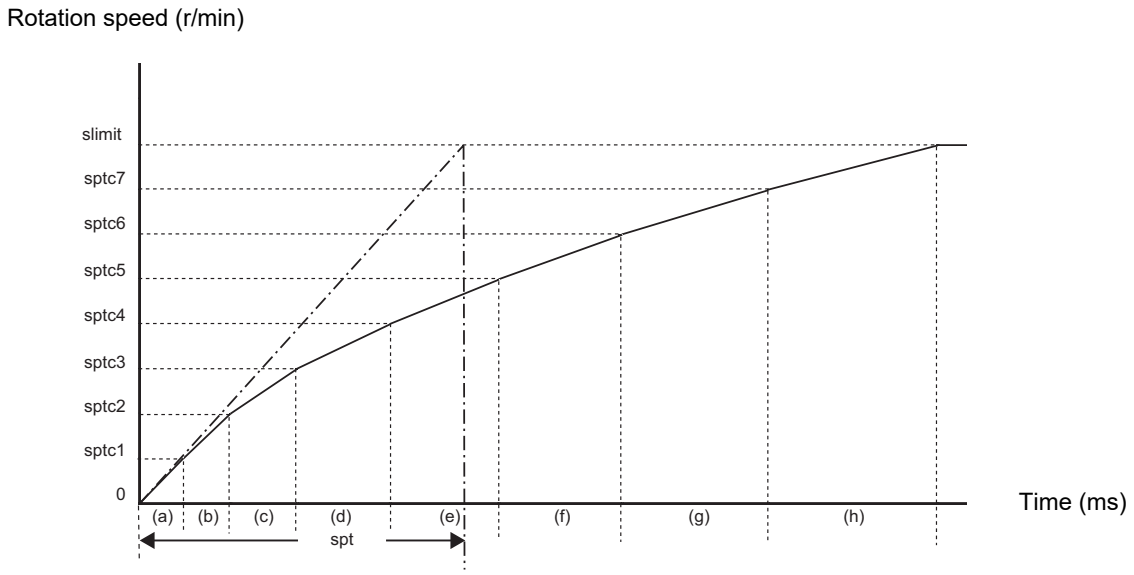


To decrease the number of acceleration/deceleration steps, set one of the followings for the unnecessary step.
- Magnification for time constant changeover speed (spdiv7 to spdiv1) = 0 (or 1)
- Spindle synchronous multi-step acceleration/deceleration changeover speed (sptc7 to sptc1) = Limit rotation speed (slimit) or higher

(2) The rotary tool axis accelerates/decelerates linearly according to the spindle synchronous acceleration/deceleration time constant (spt) setting value of the spindle selected as the rotary tool axis and workpiece axis, whichever is larger.

(3) If the rotary tool axis command rotation speed is changed during spindle synchronization, the axis will accelerate/decelerate to the commanded rotation speed according to the spindle acceleration/deceleration set in the parameters while maintaining the synchronized state.

### Phase alignment control

(1) If the tool spindle synchronization IA command (with R designation) is commanded with the G114.2 command, the synchronized spindle rotating at an arbitrary rotation speed will accelerate or decelerate to the rotation speed following the reference spindle and synchronized spindle rotation ratio command, and the spindle synchronization state will be entered. The spindles will then enter the spindle synchronization state. After that, the phases will be aligned to realize the rotation phase commanded with the R address.

(2) The spindle synchronization phase shift amount is commanded as the shift amount from the synchronized spindle's (workpiece axis) reference position ("one rotation" signal). There is not the shift amount in respect to the reference spindle (rotary tool axis).

(3) The following type of operation will take place.

| | |
|---|---|
| T1100; | Rotary tool selection |
| M03 S1=0; | Carries out forward run (speed command) 1st spindle (synchronized spindle) (a) |
| : | |
| M43 S4=500; | Carries out forward run (speed command) 4th spindle (reference spindle) (b) |
| : | |
| G114.2 H4 D1 E1 L5 R0;<br>: | Forward runs the 1st spindle (synchronized spindle) and synchronizes with the 4th spindle (reference spindle). (c)<br>The 1st spindle (synchronized spindle) synchronizes with the 4th spindle. (d)<br>Shift synchronized spindle's phase by R command value. (e) |
| : | |
| G113; | Cancel the tool spindle synchronization IA. (f) |

<Operation>

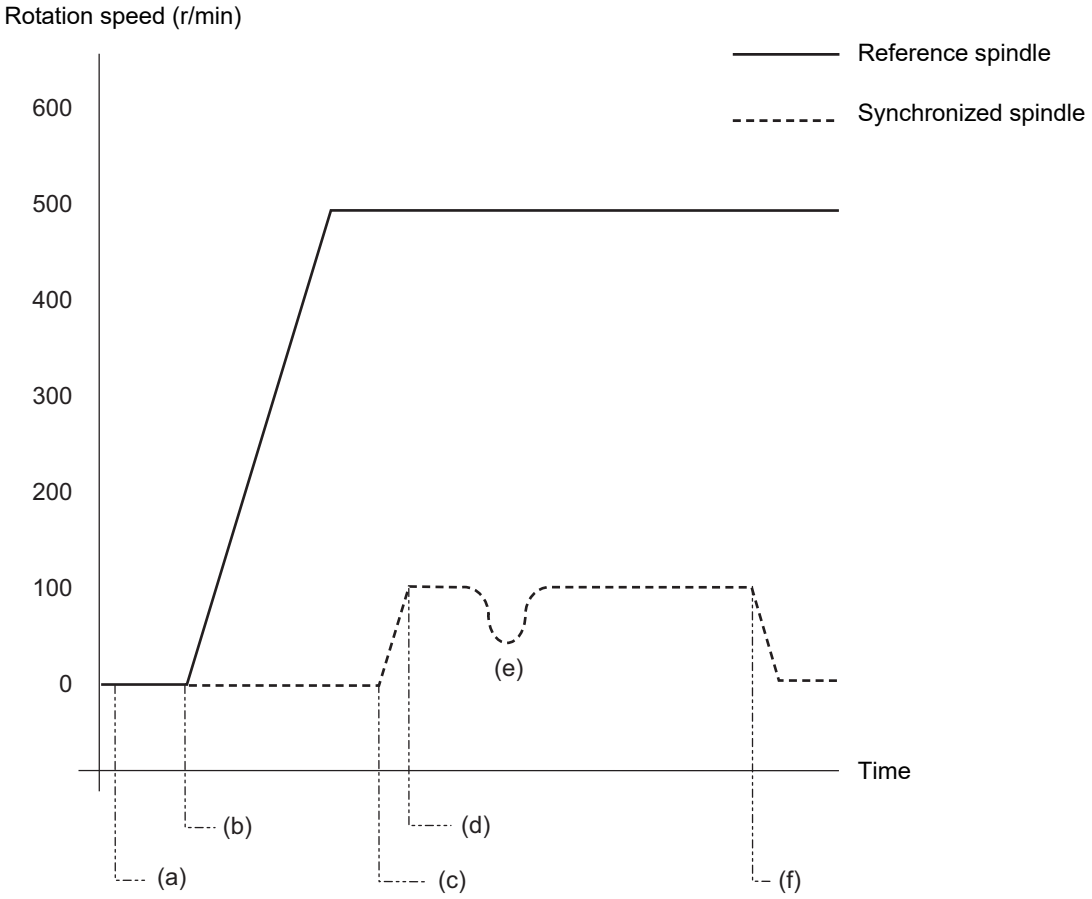

### Program example

```
:
:
M03 S1=0 ;                  1st spindle forward rotation
T1100;                      Rotary tool selection
M43 S4=500 ;                4th spindle forward rotation
G00 X40.Z-5 ;
:
:
G114.2 H4 D1 E1 L10 R0 ;    Tool spindle synchronization IA (Spindle-spindle, polygon mode) ON
                              Rotary tool axis: 4th spindle
                              Workpiece axis: 1st axis
                              Number of rotary tool gear teeth: 1
                              Rotation ratio: Number of workpiece corners: 10
                              Phase shift amount of synchronized spindle: 0°
                                  S1 starts rotating by forward run in synchronization with S4.
                                  The phase is aligned with shift amount 0°.
                                  The S1 rotation speed is 50 r/min (S2:S1 = 10:1).

G95;                         Synchronous feed mode selection

G00 X18. ;                  [1st cutting]
G01 Z20.F0.1 ;                Z axis feedrate is 0.1 mm per workpiece axis rotation.
G00 X40. ;                  If synchronization is not completed, wait to start cutting feed.
Z-5. ;
:
:
G00 X14. ;                  [Final cutting]
G01 Z20.F0.1 ;                Z axis feedrate is 0.1 mm per workpiece axis rotation.
G00 X40. ;
Z-5. ;

G113 ;                      Spindle synchronization cancel

M45;                        4th spindle stop
M05;                        1st spindle stop
:
```

## Precautions

### Precautions for programming

(1) Always command G114.2 alone in a block.

(2) Do not issue S command in the same block as G114.2.

(3) The tool spindle synchronization IA (spindle-spindle, polygon) mode cannot be commanded during the spindle synchronization mode commanded with G114.*. An operation error (M01 1005) will occur.

(4) If spindle-spindle polygon machining is commanded while the "phase shift calculation request" signal SSPHM is ON, an operation error (M01 1106) will occur.

(5) Tool spindle synchronization IA (G114.2) cannot be executed using the spindle that is used in the synchronous tapping. An operation error (M01 1007) will occur.
Also, the synchronous tapping cannot be commanded using the spindle which is used in G114.2 command. An operation error (M01 1139) will occur.

(6) When the spindle/C axis is used for the spindle-spindle polygon machining cannot be executed by designating the C axis mode spindle with the G114.2 command. An operation error (M01 1026) will occur.

(7) After G114.2 is commanded, the cutting feed block will not start until synchronization is established. Operation will stop with an operation error (M01 1033).

### Restrictions regarding phase alignment control

(1) Make sure that the rotation ratio of spindle (and rotary tool axis spindle) actual rotation speed and encoder rotation speed has the following relation.
Spindle rotation speed/encoder rotation speed = "n" ("n" is an integer of "1" or more)
If this relationship is not established, the encoder's reference position will not stay at a constant position on the spindle, and thus the phase (position) will deviate with each phase alignment command.
Note that even in this case, as shown below, if the number of rotary tool gear teeth (Number of workpiece corners) is equivalent to the rotation ratio, the blade and workpiece phase (position) will not deviate.
(Rotary tool axis spindle rotation speed * Number of rotary tool gear teeth) /encoder rotation speed = "n"
("n" is an integer of "1" or more)

(2) During phase alignment control, phase alignment is carried out following each spindle encoder's reference position.
Thus, if the positional relation of the workpiece and reference position (rotary tool and reference position) deviates when the power is turned OFF/ON or when the tool is changed, etc., the phase will deviate.

## 18.2.2 Tool Spindle Synchronization IB (Spindle-Spindle, Polygon) ; G51.2/G50.2 or G251/G250 (only 6 and 7 in G code list)

### Function and purpose

In a machine having a workpiece axis and having a spindle controlled as the rotary tool axis, polygon machining between spindles can be carried out by controlling the rotation of the rotary tool axis in synchronization with the workpiece axis rotation.
Tool spindle synchronization IB and tool spindle synchronization IC are switched depending on the setting of the parameter (#1501).

| | | |
|---|---|---|
| #1501 polyax = | 0 | : Tool spindle synchronization IB |
| | Other than 0 | : Tool spindle synchronization IC |

This function is valid when the G code system is 6 or 7.

This function cannot be combined with the following spindle synchronization functions while it is active. An operation error (M01 1005) occurs.

- Spindle synchronization I
- Spindle synchronization II
- Tool spindle synchronization IA
- Tool spindle synchronization IB (IC)
- Tool Spindle Synchronization II
- Spindle superimposition control

However, when the multiple spindle synchronization set control function is enabled, multiple spindle synchronization functions can be commanded simultaneously. The validity of this function depends on the MTB specifications (parameter "#1440 multi_sp_syn"). For details, refer to "18.5 Multiple Spindle Synchronization Set Control".

### Command format

**Tool spindle synchronization IB (Spindle-spindle, polygon mode) ON (or G251)**

```
G51.2 H__D__P__Q__R__ ;
```

| | |
|---|---|
| H | Workpiece axis selection (Reference spindle) |
| D | Rotary tool axis selection (Synchronized spindle) |
| P | Workpiece axis rotation ratio designation |
| Q | Rotary tool axis rotation ratio designation |
| R | Phase shift amount of synchronized spindle |

**Tool spindle synchronization IB (Spindle-spindle, polygon mode) Cancel (or G250)**

```
G50.2 ;
```

**Note**

(1) An axis address that involves any travel cannot be put in the same block as the tool spindle synchronization IB mode cancel command. Doing so causes the program error (P33) when the cancel command is issued, which causes automatic operation to pause.

### Detailed explanation of command format

Tool spindle synchronization IB ON (G51.2) command sets the polygon machining mode that rotates the two axes in synchronization with differing speeds by designating the rotary tool axis and workpiece axes and the rotation ratio (Number of the rotary tool gear teeth and workpiece corners) of the two designated spindle (spindle and spindle).
Tool spindle synchronization IB OFF (G50.2) command cancels the synchronous state of rotating two spindles by the tool spindle synchronization command.
The spindle-spindle polygon machining mode is also canceled in the following cases.

- Power OFF
- Emergency stop
- Reset (reset 1, reset 2, reset & rewind)
  (only when #1239 set11/bit3 = 1)
- "Spindle-spindle polygon machining cancel" signal
- Spindle synchronization cancel command (G113.1)
- "Spindle synchronization cancel" signal (SPSYC)

The detail of each address of the command format is as follows.

| Address | Meaning | Command range (unit) | Remarks |
|---|---|---|---|
| H | Workpiece axis selection<br>Command the spindle number of the workpiece axis.<br>(*1) | Spindle No.: 1 to n<br>(n: Maximum number of available spindles)<br>Spindle name: 1 to 9 | ♦If a value exceeding the command range is commanded, a program error (P35) will occur.<br>♦ If the same value as the D command is commanded, a program error (P33) will occur.<br>♦If an analog-connected spindle is selected, a program error (P33) will occur. (*2)<br>♦If this address is omitted, the spindle number or spindle name specified in the parameter is designated. |
| D | Rotary tool axis selection<br>Command the spindle number of the rotary tool axis.<br>(*1) | Spindle No.: 1 to n<br>(n: Maximum number of available spindles)<br>Spindle name: 1 to 9 | ♦If a value exceeding the command range is commanded, a program error (P35) will occur.<br>♦ If the same value as the H command is commanded, a program error (P33) will occur.<br>♦If an analog-connected spindle is selected, a program error (P33) will occur. (*2)<br>♦If this address is omitted, the spindle number or spindle name specified in the parameter is designated. |
| P | Workpiece axis rotation ratio designation<br>Set the rotation ratio (number of workpiece corners) of the workpiece axis. | 1 to 999 | ♦If a value exceeding the command range is commanded, a program error (P35) will occur. |
| Q | Rotary tool axis rotation ratio designation<br>Command the rotary tool axis rotation ratio (number of tool teeth). | 1 to 999<br>-1 to -999 | ♦If a value exceeding the command range is commanded, a program error (P35) will occur.<br>♦If a negative "-" sign is commanded, the rotary tool axis will rotate in the direction opposite to the workpiece axis. |
| R | Phase shift amount of synchronized spindle<br>Command the shift amount designation from the reference position ("one rotation" signal) of the rotary tool axis spindle. | 0 to 359.999 (°) | ♦If a value exceeding the command range is commanded, a program error (P35) will occur.<br>♦The commanded shift amount will be applied in the clockwise direction in respect to the spindle.<br>♦Minimum resolution of commanded shift amount<br>Semi-close case<br>360/4096 [°]<br>Full-close case<br>(360/4096) * K [°] )<br>(K: Gear ratio of spindle and encoder)<br>♦If there is no R command, the phase will be handled as R0. (only when #1239 set11/bit4 = 0) |

(*1) There are two spindle command methods: spindle number method and spindle name method.
Command with the spindle names, only when all spindles are set with the spindle name parameter (#3077 Sname) (from 1 to 9). For others, command with the spindle number. These settings depend on the MTB specifications.

(*2) The available spindle type and connection method depend on the specifications of your machine tool.

## Detailed description

### Rotary axis and rotation direction

The workpiece axis and rotary tool axis rotation speed and rotation direction during spindle-spindle polygon machining are as follows.

(1) The workpiece axis rotation speed and rotation direction are rotation speed commanded with the S command and the rotation direction commanded with the M command, etc., for the spindle selected as the workpiece axis.

(2) The rotary tool axis rotation speed is determined by the number of the rotary tool teeth and number of workpiece corners commanded with G51.2/G251.

$$Sw = Sh * \frac{Q}{P}$$

Sw: Rotary tool axis rotation speed (r/min)
Sh: Workpiece axis rotation speed (r/min)
P: Workpiece axis rotation ratio (Number of workpiece corners)
Q: Rotary tool axis rotation ratio (Number of rotary tool gear teeth)

(3) The rotary tool axis rotation direction is determined by the sign of the rotary tool axis selection Q commanded with G51.2/G251.
In other words, if the Q sign is "+", the rotary tool axis will rotate in the same direction as the workpiece axis. If the Q sign is "-", the rotary tool axis will rotate in the reverse direction of workpiece axis.

(4) After tool spindle synchronization IB (G51.2/G251) is commanded, the relationship between the workpiece axis and rotary tool axis rotation is held until tool spindle synchronization IB cancel (G50.2/G250) is commanded, the "spindle-spindle polygon machining cancel" signal is input, or until the "reset or emergency stop" signal is input. Even at feed hold, the workpiece axis and rotary tool axis synchronization states are held.

### Operation for polygon machining with rotary tool axis

(1) When the tool spindle synchronization IB mode is commanded, even if neither the forward run nor reverse run command is input for the rotary tool axis, the rotary tool axis will start rotating.

(2) If spindle stop is commanded to a rotary tool axis during the tool spindle synchronization IB mode (when the "spindle stop" signal is ON), the rotary tool axis will stop rotating even if the workpiece axis is rotating.

(3) The rotation command (S command) and constant surface speed control are invalid in respect to the rotary tool axis during the tool spindle synchronization IB mode. Note that the modal is updated, so these will be validated when the spindle-spindle polygon machining is canceled.

(4) If the rotation speed commanded to the workpiece axis exceeds the maximum rotation speed of the rotary tool axis or the maximum clamp speed designated by address S following G92, the workpiece axis rotation speed is clamped to prevent the rotation speed from exceeding those maximum speeds.

### Acceleration/deceleration control

(1) Acceleration/deceleration of the workpiece axis will be carried out linearly according to the spindle synchronization acceleration/deceleration time constant (parameter "#3049 spt") of the spindle selected as the workpiece axis.

(2) By setting the spindle synchronization multi-step acceleration/deceleration time constant changeover speed levels 1 to 7 (parameters "#3054 sptc1" to "#3060 sptc7") and the scale for the time constant changeover speed (parameters "#3061 spdiv1" to "#3067 spdiv7"), the acceleration/deceleration time can be changed in up to eight steps.

(3) If the workpiece axis command rotation speed is changed during spindle synchronization state, the commanded speed will be reached by accelerating or decelerating according to the spindle acceleration/deceleration set in the parameters while maintaining the synchronized state.

### Phase alignment control

(1) If the tool spindle synchronization IB command (R is treated as "0" when there is no R command) is commanded with G51.2/G251, the workpiece axis spindle rotating at an arbitrary rotation speed will accelerate/decelerate to the rotation speed following the rotation ratio command of the workpiece axis spindle and the spindle synchronization state will be entered. The spindles will then enter the spindle synchronization state. After that, the phases will be aligned to realize the rotation phase commanded with the R address.

(2) The spindle synchronization phase shift amount is commanded the shift amount from the rotary tool axis spindle's reference position ("one rotation" signal). This is not the shift amount for the workpiece axis.

(3) The following type of operation will take place.

<Program example 1> With phase error (#1239 set11/bit4 = 0)

```
  :
T1100;                  Rotary tool selection
M03 S100;               Carries out forward run (speed command) 1st spindle (workpiece axis) (a)
  :
G51.2  H1 D3 P1 Q5 R0;  Forward run the 3rd spindle (rotary tool axis) using the tool spindle synchronization
  :                     IB command.   (b)
                        Synchronize the 3rd spindle with the 1st spindle (workpiece axis (spindle)). (c) (d)
                        Shift synchronized spindle's phase by R command value. (e)
  :                     (Synchronization is completed.)  (f)
G50.2;                  Cancel the tool spindle synchronization IB.   (g)
```

<Operation>

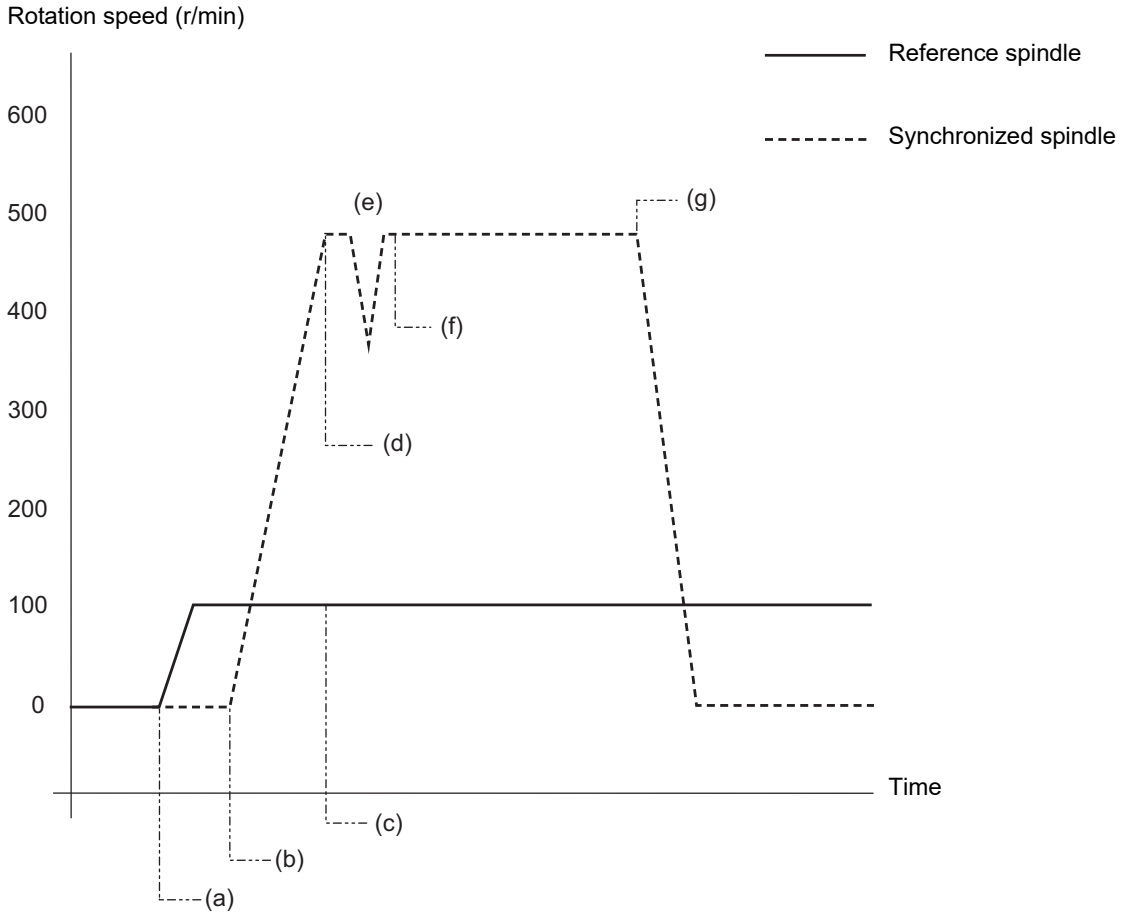

<Program example 2> No phase error (#1239 set11/bit4 = 1)

```
  :
T1100;                  Rotary tool selection
M03 S100;               Forward run (speed command) the 1st spindle (workpiece axis).   (a)
  :
G51.2  H1 D3 P1 Q5 ;    Forward run the 3rd spindle (rotary tool axis) using the tool spindle synchroniza-
  :                     tion IB command.   (b)
                        Synchronize the 3rd spindle with the 1st spindle (workpiece axis (spindle)).   ...(c)
                        (d)
  :                     (Synchronization is completed.)  (e)
G50.2;                  Cancel the tool spindle synchronization IB.   (f)
```

<Operation>

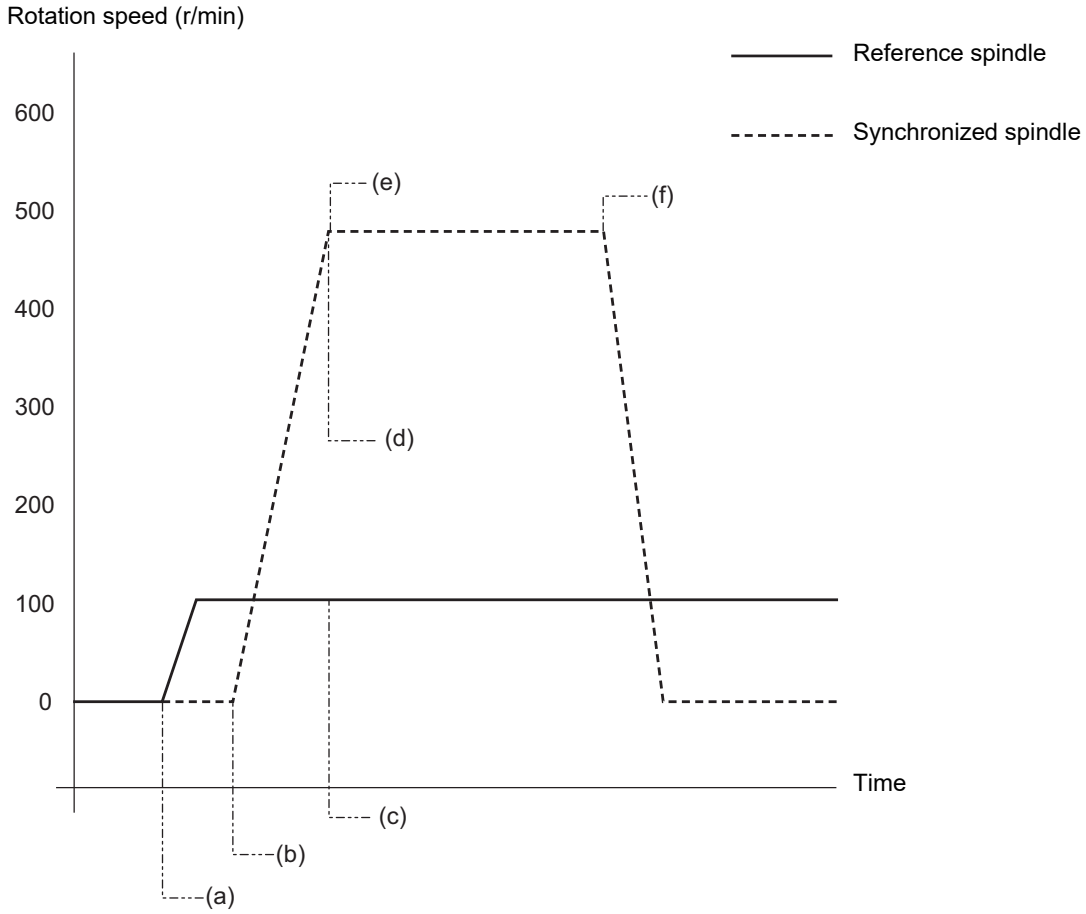

### Program example

```
:
:
T1100;                    Rotary tool selection
M03 S500 ;                1st spindle forward rotation
G00 X40.Z-5 ;

G51.2 H1 D3 P1 Q3 R0 ;    Tool spindle synchronization IB mode ON
                            Select 1st spindle as workpiece axis and 3rd spindle as rotary tool
                            axis.
                            Designate rotation ratio as one workpiece corner and three rotary
                            tool teeth.
                            Designate rotary tool axis spindle phase shift amount as 0°.
                                Start synchronous rotation of S3 to S1 with forward run.
                                The phase is aligned with shift amount 0°.
                                S3 rotation speed is 1500 r/min (S1:S3 = 1:3)
G95;                        Synchronous feed mode selection

G00 X18. ;                If synchronization is not completed, wait to start cutting feed.
G01 Z20.F0.1 ;            1st cutting
G00 X40. ;
  Z-5. ;
:
:
:
G00 X14. ;                Final cutting
G01 Z20.F0.1 ;
G00 X40. ;
  Z-5. ;

G50.2 ;                   Tool spindle synchronization IB cancel
                          3rd spindle stop

M05 ;                     1st spindle stop
:
:
```

## Precautions

### Restrictions regarding phase alignment control

(1) Make sure that the spindle (and workpiece axis spindle) actual rotation speed and encoder rotation speed's rotation ratio has the following relation.
Spindle rotation speed/encoder rotation speed = "n" ("n" is an integer of 1 or more)
If this relationship is not established, the encoder's reference position will not stay at a constant position on the spindle, and thus the phase (position) will deviate with each phase alignment command.
Note that even in this case, as shown below, if the number of workpiece corners (number of rotary tool teeth) corresponds to the rotation ratio, the phase (position) of the blade and workpiece will not deviate.
(Workpiece axis spindle rotation speed * Number of workpiece teeth) /encoder rotation speed = "n" ("n" is an integer of "1" or more)

(2) During phase alignment control, the phase are aligned to the reference position of each spindle's encoder. Thus, if the position relation of the workpiece and reference position (workpiece and reference position) deviates when the power is turned ON/OFF or the tool is replaced, etc., the phase will deviate.

### Precautions for programming

(1) G51.2 (G251) must be commanded alone in a block, which also applies to G50.2 (G250).

(2) The R command can be omitted when entering the tool spindle synchronization IB mode, but the P and Q commands must always be issued. A program error (P33) will occur if there are not the P and Q commands.

(3) To change the P, Q or R modal value in the tool spindle synchronization IB mode, command G51.2/G251 again. In this case, R can be commanded alone. However, if either P or Q is also changed, always command P and Q again.

(4) Commands can be issued to each part system, but two or more part systems cannot be used simultaneously. The part system commanded first will be valid, and an operation error (M01 1005) will occur for that commanded last.

(5) The spindle No. designated in the parameters will be used if D_H_ is omitted from the G51.2/G251 command.

(6) A program error (P610) will occur if the workpiece axis No. (#1518) and rotary tool axis No. (#1519) are the same as the value set in the parameters. A program error (P33) will occur if the spindle is connected in analog mode. (These parameters depend on the MTB specifications.)

(7) After G51.2/G251 was commanded, the cutting feed block will not start until synchronization is established. (An operation error (M01 1033) will occur, and the program stops.)

(8) Tool spindle synchronization IB (G51.2/G251) machining cannot be executed by designating the spindle which is used in the synchronous tapping. An operation error (M01 1007) will occur. Also, the synchronous tapping cannot be commanded using a spindle which is used in G51.2/G251 command. An operation error (M01 1139) will occur.

(9) If the rotary tool axis number or workpiece axis number is changed in the tool spindle synchronization IB mode, a program error (P33) will occur.

## 18.2.3 Tool Spindle Synchronization IC (Spindle-NC Axis, Polygon) ; G51.2/G50.2 or G251/G250 (only 6 and 7 in G code list)

### Function and purpose

This function controls so that the workpiece (spindle) and tool (rotary tool axis) are synchronously rotating with the commanded ratio to conduct polygon machining. This function is available for machining of square-head bolts, bolt heads of hexagon-head bolts, or hexagon nuts.
Tool spindle synchronization IB and tool spindle synchronization IC are switched depending on the setting of the parameter (#1501).

This function cannot be combined with the following spindle synchronization functions while it is active. An operation error (M01 1005) occurs.

- Spindle synchronization I
- Spindle synchronization II
- Tool spindle synchronization IA
- Tool spindle synchronization IB (IC)
- Tool Spindle Synchronization II
- Spindle superimposition control

### Command format

**Tool Spindle Synchronization IC (Spindle-NC Axis, Polygon mode) ON (or G251)**

```
G51.2 P__ Q__ ;
```

| | |
|---|---|
| P,Q | Spindle and rotary tool axis rotation ratio (P__:Q__)<br>P : Spindle<br>Q : Rotary tool axis<br>Command range : Integer value between 1 and 200, -1 and -200<br>Rotation direction : Designate with a sign ("+" for forward rotation, whereas "-" for reverse rotation). |

**Tool spindle synchronization IC (spindle-NC axis, polygon) cancel (or G250)**

```
G50.2 ;
```

In addition to the G50.2 command, the tool spindle synchronization IC mode is also canceled in the following cases.

- Power OFF
- Emergency stop
- Reset (reset 1, reset 2, reset & rewind)

## Detailed description

### Details of operation

| | |
|---|---|
| S1000 ; | The spindle rotation speed (workpiece rotation speed) is commanded. |
| G51.2 P1 Q2 ;<br>:<br>(Cutting into workpiece)<br>: | The polygon machining mode is entered with the G51.2 command.<br>The spindle and rotary tool axis start rotating, and control is applied so that the spindle rotation speed and tool axis rotation speed are the commanded ratio (P:Q). |
| G50.2 ; | The polygon machining mode between the spindle and rotary tool axis is canceled by the G50.2 command, and the spindle and rotary tool axis rotation stop. |

The rotary tool axis depends on the setting of the base specification parameter "#1501 polyax".

### Rotation direction

(1) The spindle rotation direction during the polygon machining mode is determined by the P command sign and the spindle parameter "#3106 zrn_typ/bit7" (synchronous tap command polarity).

| P command sign | #3106 zrn_typ/bit7 | Rotation direction |
|---|---|---|
| (+) | 0 | CW |
| (+) | 1 | CCW |
| (-) | 0 | CCW |
| (-) | 1 | CW |

(2) The rotation direction of the rotary tool axis during the polygon machining mode is determined by the Q command sign and the base specifications parameters "#1018 CCW".

| Q command sign | #1018 CCW | Rotation direction |
|---|---|---|
| (+) | 0 | CW |
| (+) | 1 | CCW |
| (-) | 0 | CCW |
| (-) | 1 | CW |

## Program example

| | |
|---|---|
| N10 G00 X100. Z20. ; | Positioning |
| N20 S1000 ; | Spindle (workpiece) rotation speed command |
| N30 G51.2 P1 Q2 ; | Spindle/tool axis rotation start<br>(Spindle rotation speed 1000 [r/min], tool axis rotation speed 2000 [r/min]) |
| N40 G01 X80. F10. ; | Cutting (X axis) |
| N50 G04 X2. ; | Dwell |
| N60 G00 X100. ; | Retraction (X axis) |
| N70 G50.2 ; | Spindle/tool axis rotation stop |

## Relationship with other functions

### Guide bushing spindle synchronization

If the guide bushing reference spindle or guide bushing spindle is commanded for the polygon spindle, an operation error (M01 1138) occurs.

### Spindle position control (Spindle/C axis control)

If the spindle/C axis is changed to the C axis mode while tool spindle synchronization IC is executed using the spindle/C axis as the polygon-related spindle, an operation error (M01 1026) occurs. Also, if tool spindle synchronization IC is commanded using the spindle/C axis in the C axis mode as the polygon-related spindle, an operation error (M01 1026) occurs.

### High-speed high-accuracy Control

When tool spindle synchronization IC is commanded while the high-speed high-accuracy control is valid or when high-speed high-accuracy control is commanded during tool spindle synchronization IC, high-speed high-accuracy control is temporarily canceled, and tool spindle synchronization IC is executed preferentially.

### Arbitrary axis exchange control

The arbitrary axis exchange command (G140), arbitrary axis exchange return command (G141), or reference axis arrange return command (G142) cannot be issued in the part system for tool spindle synchronization IC. A program error (P501) occurs. However, tool spindle synchronization IC using the arbitrary axis exchange axis can be commanded.

The rotary tool axis of tool spindle synchronization IC cannot be commanded as the axis to be replaced. Doing so triggers the arbitrary axis exchange disable state.

### 3-dimensional coordinate conversion

The 3-dimensional coordinate conversion cannot be commanded in the part system for tool spindle synchronization IC. A program error (P922) occurs.
Also, tool spindle synchronization IC cannot be commanded during 3-dimensional coordinate conversion. A program error (P921) occurs.

## Precautions

(1) The tool spindle synchronization IC specifications must be provided to use this function.
If "G51.2/G251" or "G50.2/G250" is commanded without the specifications, a program error (P39) will occur.

(2) G51.2 (G251) must be commanded alone in a block, which also applies to G50.2 (G250).
- If the G51.2/G251 (G50.2/G250) command and G code of group 0 are commanded in the same block, the G code commanded last in the block will have the priority.
- If the G51.2/G251 (G50.2/G250) command and G code other than a group 0 code are commanded in the same block, a program error (P33) will occur.

(3) While in the polygon machining mode, a movement command cannot be issued in the machining program for an NC axis set as the rotary tool axis.
If a movement command is issued to the rotary tool axis during the polygon machining mode, the program error (P32) will occur.

(4) The NC axis set as the rotary tool axis can be used as a feed axis in modes other than the polygon machining mode.

(5) The following functions are invalid for the rotary tool axis during the polygon machining mode.
- Override
- Feed hold
- Stored stroke limit

(6) The spindle rotation speed can be changed with the S command even during the polygon machining mode.
The spindle override and spindle rotation speed clamp are also valid.
If the spindle rotation speed is changed, the rotary tool axis rotation speed will also change so that the spindle and rotary tool axis established the P:Q ratio.

(7) The forward run/reverse run commands are invalid for the spindle when the polygon machining mode is in effect.

(8) If the feedrate for the rotary tool axis exceeds the rapid traverse rate (axis specifications parameters "#2001 rapid") when the polygon machining mode is in effect, the speed will be clamped at the rapid traverse rate. If the rotary tool axis is clamped at the rapid traverse rate, the spindle speed will also be set to lower than the command speed so that the spindle and rotary tool axis establish the P:Q ratio.

(9) The position loop gain for the rotary tool axis will be the value set in the axis specifications parameters "#2017 tap_g" during the polygon machining mode. The position loop gain for the spindle will be the spindle parameters "#13002 PGN" setting value.

(10) To perform polygon machining, set the parameter "#8213 rotary axis type" to "0" or "1".

(11) The following functions cannot be used simultaneously with polygon machining.
- Synchronous tapping
- Thread cutting

(12) If an axis other than the rotary tool axis reaches the stroke end during the polygon machining mode, the axis other than the rotary tool axis will stop moving, but the rotary tool axis and spindle rotation will not stop.

(13) If the rotary tool axis reaches the stroke end during the polygon machining mode, the rotary tool axis and spindle rotation will stop, and the movement of axes other than the rotary tool axis will also stop.

(14) If the spindle specifications parameter "#3106 zrn_typ/bit4" is set to "0", the polygon machining will start after the spindle returns to the zero point. (This parameter setting depends on the MTB specifications.)

# 18.3 Tool Spindle Synchronization II

## 18.3.1 Tool Spindle Synchronization II (Hobbing) ; G114.3/G113

### Function and purpose

This function is to cut the gear with hob (hob cutter).
A spur gear can be machined by synchronizing and rotating the hob axis and the workpiece axis in a constant ratio.
A helical gear can be machined by compensating the workpiece axis according to the gear torsion angle for the Z axis movement.

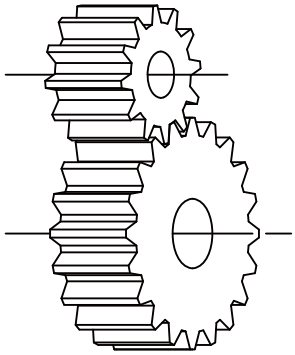

Spur gears

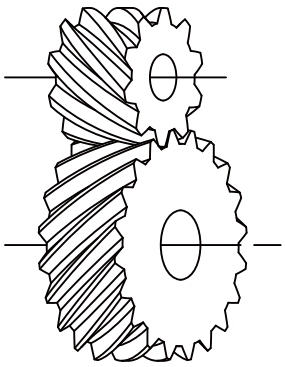

Helical gears

By synchronizing and rotating the hob axis and the workpiece axis in a constant rotation ratio, a gear is machined so that the cutter is engaged with gear.

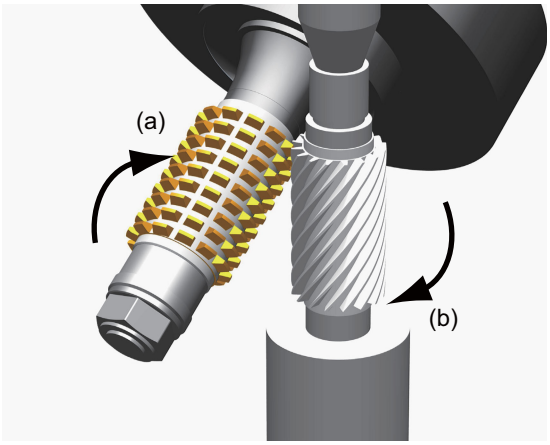


(a) Hob
(b) Gear

In this manual, the hob axis and the workpiece axis are defined as follows:

Hob axis : Rotary tool axis on which a hob is mounted
Workpiece axis : Rotary axis on which a workpiece is mounted
Hob threads : Number of the screw paths created by cutter part on hob. Usually this is 1 row.

This function cannot be combined with the following spindle synchronization functions while it is active. An operation error (M01 1005) occurs.

- Spindle synchronization I
- Spindle synchronization II
- Tool spindle synchronization IA
- Tool spindle synchronization IB (IC)
- Tool Spindle Synchronization II
- Spindle superimposition control

However, when the multiple spindle synchronization set control function is enabled, multiple spindle synchronization functions can be commanded simultaneously. The validity of this function depends on the MTB specifications (parameter "#1440 multi_sp_syn"). For details, refer to "18.5 Multiple Spindle Synchronization Set Control".

## Command format

### Tool spindle synchronization II (hobbing) ON (for spur gear)

| | |
|---|---|
| **G114.3 H__ D__ E__ L__ R__ ;** | **(For G code lists 2 to 5)** |

| | |
|---|---|
| **G81.4 L_ R_ A_ ;** | **(For G code lists 6 and 7)** |

| | |
|---|---|
| H | Hob axis selection |
| D | Workpiece axis selection |
| E(L) | Hob axis rotation ratio designation |
| L(R) | Workpiece axis rotation ratio designation |
| R(A) | Workpiece axis phase shift amount |

### Tool spindle synchronization II (hobbing) ON (for helical gear)

| | |
|---|---|
| **G114.3 H__ D__ E__ L__ P__ Q__ R__ ;** | **(For G code lists 2 to 5)** |

| | |
|---|---|
| **G81.4 L__ R__ P__ Q__ A__ ;** | **(For G code lists 6 and 7)** |

| | |
|---|---|
| H | Hob axis selection |
| D | Workpiece axis selection |
| E(L) | Hob axis rotation ratio designation |
| L(R) | Workpiece axis rotation ratio designation |
| P | Gear torsion angle designation |
| Q | Module or diametral pitch designation |
| R(A) | Workpiece axis phase shift amount |

### Tool spindle synchronization II (hobbing) OFF

| | |
|---|---|
| **G113 ; (G113.1 ;)** | **(For G code lists 2 to 5)** |

| | |
|---|---|
| **G80.4;** | **(For G code lists 6 and 7)** |

**Note**

(1) An axis address that involves any travel cannot be put in the same block as the tool spindle synchronization II cancel command. Doing so causes the program error (P33) when the cancel command is issued, which causes automatic operation to pause.

(2) "G113.1;" can also be used instead of "G113;" or "G80.4;".

### Detailed explanation of format

Tool spindle synchronization II ON (G114.3 for spur gear) is set as the hobbing mode for the spur gears that synchronously rotates two axes at different speeds by designating the hob axis and workpiece axis and designating the rotation ratio (number of hob threads and number of gear teeth) for the two designated axes.

Tool spindle synchronization II ON (G114.3 for helical gears) is set as the hobbing mode for the helical gears by designating the gear torsion angle and module or diametral pitch.

Tool spindle synchronization II OFF (G113) cancels the synchronous state of the hob axis and workpiece axis rotating in synchronization with the tool spindle synchronization II (hobbing) command.

| Address | Meaning | Command range (unit) | Remarks |
|---|---|---|---|
| H | Hob axis selection<br>Command the spindle number of the hob axis. (*1) | Spindle No.: 1 to n<br>(n: Maximum number of available spindles)<br>Spindle name: 1 to 9 | ♦If there is no command, a program error (P33) will occur.<br>♦If an analog-connected spindle is selected, a program error (P33) will occur.<br>♦If disconnected spindle No. is designated, a program error (P35) will occur. |
| D | Workpiece axis selection<br>Command the rotation number of the workpiece axis. | -9 to -1, 1 to 9<br>±1 to 8<br>Axis No. (in part system)<br>±9: C axis | ♦If there is no command, a program error (P33) will occur.<br>♦The rotation direction of the workpiece axis in respect to the hob axis is commanded with the D sign.<br>♦If the D sign is "+", the workpiece axis will rotate in the forward direction when the hob axis rotates in the forward direction. If the D sign is "-", the workpiece axis will rotate in the reverse direction when the hob axis rotates in the forward direction.<br>♦If the axis specified as the workpiece axis is not a rotary axis, a program error (P33) will occur.<br>♦If C axis is selected when there is no C axis, a program error (P33) will occur. |
| E(L) | Hob axis rotation ratio designation<br>Command the hob axis rotation ratio (hob threads). | 0 to 999 | ♦If there is no command, the rotation ratio will be interpreted as 1.<br>♦If E0 is commanded, the workpiece axis will stop (synchronized with the Z axis for a helical gear). (*2) |
| L(R) | Workpiece axis rotation ratio designation<br>Command the workpiece axis rotation ratio (number of gear teeth). | 1 to 999 | ♦ If there is no command, the rotation ratio will be interpreted as 1.<br>(For G code lists 6 and 7)<br>♦If L0 is commanded, the workpiece axis will stop (synchronized with the Z axis for a helical gear). (*6)<br>♦The rotation direction of the workpiece axis in respect to the hob axis is commanded with the L sign.<br>L sign = "+": When the hob axis rotates forward, the workpiece axis also rotates forward.<br>L sign = "-": When the hob axis rotates forward, the workpiece axis rotates backward. |
| R(A) | Workpiece axis phase shift amount<br>Command the amount to shift from the workpiece axis reference position to synchronize with the hob axis reference position. | 0 to 359999<br>(0 to 359.999°)<br>Decimal point input possible (*3) | ♦The commanded shift amount will be applied in the workpiece axis counter's positive direction.<br>♦If there is no R command, phase alignment will not be carried out. |

| Address | Meaning | Command range (unit) | Remarks |
|---|---|---|---|
| P | Gear torsion angle designation<br>Command the torsion angle for the helical gear. | -89000 to 89000<br>(-89.000 to 89.000)<br>Decimal point input possible (*4) | ♦If there is no P command, or if P0 is commanded, a spur gear will be machined.<br>♦To move the Z axis in the plus direction after entering the hobbing mode, command the direction that the workpiece axis is twisted.<br>P sign: when it is +, + direction<br>P sign: when it is -, - direction<br> 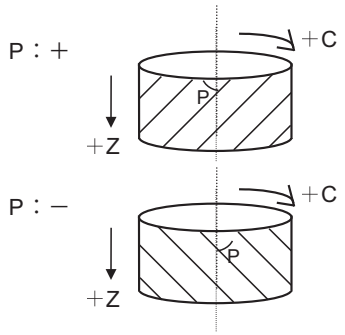 <br> |
| Q | Module designation<br>Command the normal module for helical gear.<br>When inch input, command the diametral pitch. | Metric input<br>Module designation<br>100 to 25000<br>0.1 to 25.<br>(0.1 to 25 mm)<br>Inch input<br>Diametral pitch designation<br>1000 to 250000<br>0.1 to 25.<br>(0.1 to 25inch$^{-1}$)<br>Decimal point input possible (*5) | ♦If there is no Q command for helical gear (when P is designated), a program error (P33) will occur.<br>♦For spur gear (when P is not designated, or P0 is commanded), the Q command will be ignored. |

(*1) If a value exceeding the command range is commanded, a program error (P35) will occur.

(*2) When address E = 0 is commanded, the workpiece axis will not rotate.
Do not use this except for special cutting (cutting of only part of the gears, etc.).

(*3) The range which can be set depends on the input setting unit (parameter "#1003 iunit").
(Example) When the input setting unit is 0.000001°, the range is 0 to 359.999999°.

(*4) If the decimal point input is OFF, the available setting range varies according to the input setting unit (parameter "#1003 iunit"). When the input setting unit is 0.000001°, the range is -89000000 to 89000000.

(*5) If the decimal point input is OFF, the available setting range varies according to the input setting unit (parameter "#1003 iunit"). When the input setting unit is 0.000001°, the range is as follows.
100000 to 250000000 in metric system
1000000 to 2500000000 in inch system

(*6) When address L = 0 is commanded, the workpiece axis will not rotate. Do not use this except for special cutting (cutting of only part of the gears, etc.).

## Note

(1) In the G81.4 command, the hob axis (spindle number or spindle name) and workpiece axis (NC axis number) depend on the MTB specifications (parameter "#1595 hobm" or "#1596 hobs").

## Detailed description

This chapter provides a description using G code lists 2 to 5 as an example. For G code lists 6 and 7, change to the appropriate commands.

### Rotation ratio change during tool spindle synchronization II (hobbing) mode

The rotation ratio and the number of hob threads can be changed without stopping the hob axis or the workpiece axis during tool spindle synchronization II (hobbing) mode.

| | |
|---|---|
| **G114.3 E__ L__ P__ Q__ ;** | **Rotation ratio change (For G code lists 2 to 5)** |
| **G81.4 L__ R__ P__ Q__ ;** | **Rotation ratio change (For G code lists 6 and 7)** |

| | |
|---|---|
| E(L) | Hob axis rotation ratio designation |
| L(R) | Workpiece axis rotation ratio designation |
| P | Gear torsion angle designation |
| Q | Module or diametral pitch designation |

(1) Each address can be omitted in the G114.3 command in the tool spindle synchronization II (hobbing) mode. If the address is omitted, modal value of the last command is used.
(Example) When changing only the workpiece axis rotation ratio (the modal value of the previous command is used for items other than the workpiece axis rotation ratio.)
G114.3 L50;

(2) If the followings are issued, a program error (P33) will occur.
(a) When R command (workpiece axis phase shift amount) is issued.
(b) When the hob axis number and workpiece axis number are changed (for G code lists 6 and 7).
(c) When other than "0" is commanded by E command in E=0 state, or "0" is commanded by E command in E≠0 state.

(3) The workpiece axis rotation speed may be changed by rotation ratio. At this time, the acceleration/deceleration time constant follows the hobbing workpiece axis time constant (parameter "#2195 hob_tL").

(4) "Spindle rotation speed synchronization completion" signal is turned OFF by changing the rotation ratio. This signal is turned ON when the workpiece axis rotation speed reaches the prescribed range for hob axis rotation speed after completing the rotation ratio change.

(5) The hob axis rotation speed cannot be changed while the rotation ratio is changed (during workpiece axis acceleration/deceleration). If the rotation command is issued for hob axis during the rotation ratio change, the commanded rotation speed is applied after completing the rotation ratio speed change.

(6) The helical gear machining by Z axis movement does not be executed while the rotation ratio is changed (during workpiece axis acceleration/deceleration).
The helical gears machining is executed after completing the rotation ratio change.

(7) The phase of hob axis and workpiece axis during rotation ratio changing (during workpiece axis acceleration/deceleration) or after changing is not warrantable. A phase cannot be aligned with gears machining of the last command.

(8) The "Hob axis delay (advance) monitoring", "Compensation control by workpiece axis" and "The workpiece axis feed forward control" are invalid while the rotation ratio is changed (during workpiece axis acceleration/deceleration).
These functions are valid after finishing the rotation ratio change.

### Rotation speed and rotation direction

The rotation speed and rotation direction of the hob axis and workpiece axis during tool spindle synchronization II (hobbing) are as follows.

(1) The rotation speed and rotation direction of hob axis are the rotation speed commanded with the S command and the rotation direction commanded with the M command, etc., for the spindle selected as the hob axis.

| When the sign of D command is + | When the sign of D command is - |
|---|---|
| 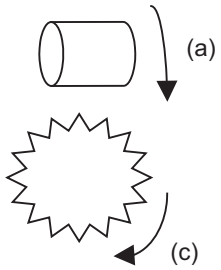 | 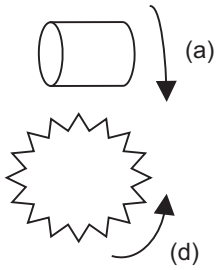 |
| 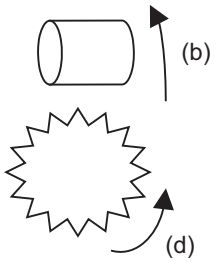 | 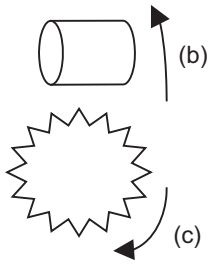 |

(a) Hob axis: Forward rotation
(b) Hob axis: Reverse rotation
(c) Workpiece axis: + direction
(d) Workpiece axis: - direction

<Note>

- The rotation directions (+/- directions) of the workpiece axis shown above refer to the forward and reverse directions of the machine coordinate system of the workpiece axis.

(2) The workpiece axis rotation speed is determined by the hob threads specified using the hobbing mode command and the number of gear teeth.

$$Sw = Sh * \frac{E}{L}$$

Sw : Workpiece axis rotation speed (r/min)
Sh: Hob axis rotation speed (r/min)
E: Hob axis rotation ratio (number of hob threads)
L: Workpiece axis rotation ratio (number of gear teeth)

(3) The workpiece axis rotation direction varies depending on the G code list.

[G code lists 2 to 5]

The workpiece axis rotation direction is determined by the sign of the workpiece axis selection "D" commanded with the hobbing mode command.
In other words, when the "D" sign is "+", the workpiece axis will rotate in the same direction as the hob axis, and when the "D" sign is "-", the workpiece axis will rotate in the direction opposite to the hob axis.

[When the G code list 6 or 7 is set]

The workpiece axis rotation direction is determined by the sign of the hob axis rotation ratio "L" commanded with the hobbing mode command.
In other words, when the "L" sign is "+", the workpiece axis will rotate in the same direction as the hob axis, and when the "L" sign is "-", the workpiece axis will rotate in the direction opposite to the hob axis.

(4) After tool spindle synchronization II (hobbing) was commanded, the relationship between the hob axis and workpiece axis rotation is held in all operation modes of automatic and manual modes until spindle synchronization cancel (G113) is commanded or until the "spindle synchronization cancel" signal is input.
Even during reset or feed hold, the hob axis and workpiece axis synchronization state is held.

### Workpiece axis control

(1) When the hobbing mode is commanded during hob axis rotation, the workpiece axis accelerates up to the speed required in synchronization with the hob axis according to the hobbing workpiece axis time constant (#2195 hob_tL) using the constant-gradient acceleration/deceleration control. Then rotates in synchronization with hob axis.

(2) The "axis selection" signal and in "axis motion" signal of the workpiece axis are not output during the tool spindle synchronization II (hobbing) mode.

(3) If a manual movement command is issued to the workpiece axis during the tool spindle synchronization II (hobbing) mode, the manual movement will be superimposed on the workpiece axis movement with tool spindle synchronization. In this case, the "axis selection" signal and in "axis motion" signal of workpiece axis will be output. Note that, if the movement command is issued in the manual reference position return mode, an operation error (0005) occurs.
An automatic movement command can be issued to the workpiece axis during the tool spindle synchronization II (hobbing) mode. Refer to "(2) Command compensation" in "Compensation control by workpiece axis" for details of the command to the workpiece axis.

(4) During the tool spindle synchronization II (hobbing) mode, the operations in respect to the "input" signals of external deceleration, interlock and machine lock for workpiece axis are as follows.

| | Interlock | Machine lock | External deceleration |
|---|---|---|---|
| Movement by the hobbing function | Invalid | Invalid | Invalid |
| Movement by manual command | Valid for manual interlock | Valid for manual machine lock | Valid |
| Automatic compensation by incremental command | Valid for automatic interlock | Valid for automatic machine lock | Valid |

(5) If a "servo OFF" signal is input for the workpiece axis during the Tool spindle synchronization II (hobbing) mode, the tool spindle synchronization II (hobbing) is canceled because synchronization cannot be maintained.

(6) The workpiece axis rotation speed is determined according to the hob axis rotation speed, so designate the hob axis rotation speed so that the workpiece axis cutting clamp speed is not exceeded.

(7) The C axis counter on each screen will be updated as shown below during the tool spindle synchronization II (hobbing) mode.

(a) When the workpiece axis is a rotary-type rotary axis

The axis will rotate in the 0.000 to 359.999 range in the normal manner.

(b) When the workpiece axis is a linear-type rotary axis (all coordinate values linear type)

The axis will rotate in the 360° range including the machine coordinate position and workpiece coordinate position when hobbing starts.

(c) When the workpiece axis is a linear-type rotary axis (workpiece coordinate values linear type)

The axis will rotate in the 360° range including the workpiece coordinate position when hobbing starts.

(Example)

| Coordinate value when the hobbing starts | | Rotation range | |
|---|---|---|---|
| 125.000 | (°) | 0.000 to 359.999 | (°) |
| 750.500 | (°) | 720.000 to 1079.999 | (°) |
| -252.200 | (°) | -360.000 to -0.001 | (°) |

(8) If the hobbing command is issued before the workpiece axis completes zero point return, a program error (P430) will occur.

### Acceleration/deceleration control

(1) The hob axis will carry out multi-step acceleration/deceleration with the spindle synchronization acceleration/deceleration time constant (spt) set for the spindle selected as the hob axis.

### Phase alignment control (Machine configuration that the phase alignment is possible)

To carry out phase alignment during hobbing, the spindle encoder commanded to the hob axis must have a Z phase and satisfy the following conditions.

| Control system | Gear ratio conditions |
|---|---|
| Semi-closed control | Spindle side gear : Motor side gear = 1 : 1 |
| Full-closed control | Spindle end : Encoder end = 1 : 1 |
| Control system | Gear ratio conditions |

### Phase alignment control (Operation when the zero point of hob axis is not established)

When the zero point of hob axis is not established by the hob axis rotation after turning the power ON or the spindle gear changeover, carry out phase alignment by following operations.
(The zero point of the hob axis is established within the range of (a) - (b) in the figure.)

(1) When tool spindle synchronization II (with R command) is specified using the hobbing mode command , the rotary axis commanded as the workpiece axis will enter the spindle synchronization II (hobbing) control state.

(2) The hob axis will start rotation at the Z phase detection speed (parameter "#3109 zdetspd") set in the parameters with the first S command issued for the hob axis after the hobbing control state is entered.
At this time, the workpiece axis will reach the rotation speed following the rotation ratio command for the hob axis and workpiece axis.
If this command rotation speed is 0 (r/min), the hob axis will not start rotating, and instead will wait for the next S command.

(3) The hob axis and workpiece axis phases will be aligned in this state.

(4) After the phases are aligned, the hob axis will accelerate/decelerate to the rotation speed commanded with the S command. The workpiece axis will accelerate/decelerate to the rotation speed obtained based on the hob axis rotation speed allowing for the hob axis and workpiece axis rotation ratio, and will enter the synchronized state.

(5) Below is the operation example:

```
Txx00;                  Select a rotary axis
M83 S4=0;               Forward run the 4th spindle (hob axis) (Rotation speed is "0"). (a)
:
G114.3 H4 D9 E1 L5 R0;  Hobbing mode ON (phase alignment with the phase difference of zero). (b)
S4=500;                 Rotate the 4th spindle (hob axis) at 500 r/min. (c)
:
M85;                    Stop the 4th spindle. (d)
G113;                   Hobbing mode OFF. (e)
```

<Operation>

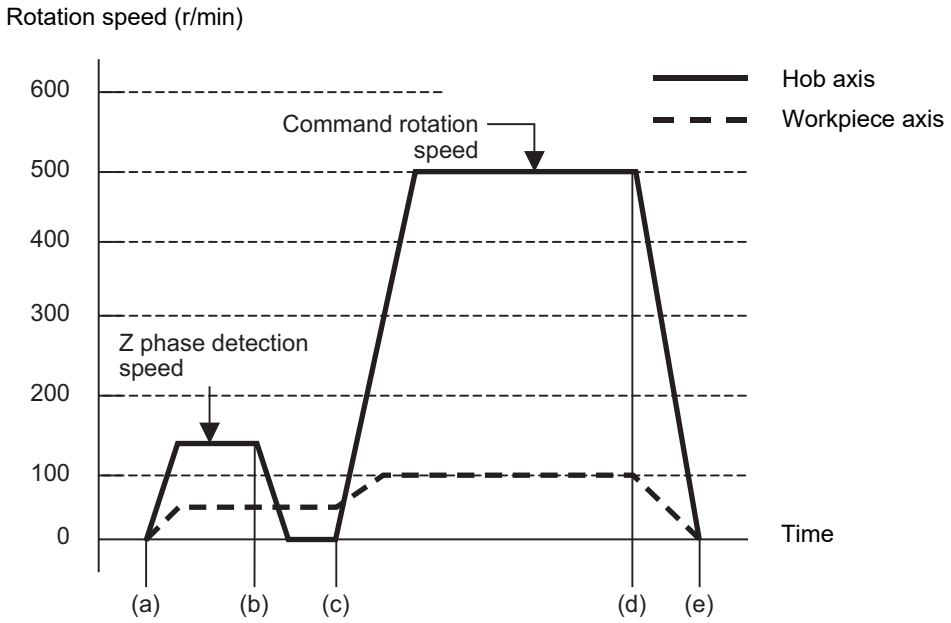

### Phase alignment control (Operation when the zero point of hob axis is established)

When the zero point of hob axis has already been established, the zero point of hob axis establishment is omitted. Thus, the process finishes fast compared with the case that the zero point of hob axis is not established.

(1) When tool spindle synchronization II (with R command) is specified using the hobbing mode command , the rotary axis commanded as the workpiece axis will enter the spindle synchronization II (hobbing) control state.

(2) The hob axis rotation speed follows the Z phase detection speed (parameter "#3109 zdetspd") set in the parameters with the first S command issued for the hob axis after entering the hobbing control state.
If this command rotation speed is 0 (r/min), the workpiece axis will not start rotating, and instead will wait for the next S command.

(3) Phase alignment is carried out when the hob axis is stopped and the workpiece axis is rotating.

(4) After the phases are aligned, the hob axis will accelerate/decelerate to the rotation speed commanded with the S command. The workpiece axis will accelerate/decelerate to the rotation speed obtained based on the hob axis rotation speed allowing for the hob axis and workpiece axis rotation ratio, and will enter the synchronized state.

(5) Below is the operation example:

```
Txx00;                  Select a rotary axis
M83 S4=0;               Forward run the 4th spindle (hob axis) (Rotation speed is "0"). (a)
:
G114.3 H4 D9 E1 L5 R0;  Hobbing mode ON (phase alignment with the phase difference of zero). (b)
S4=500;                 Rotate the 4th spindle (hob axis) at 500 r/min. (c)
:
M85;                    Stop the 4th spindle. (d)
G113;                   Hobbing mode OFF. (e)
```

<Operation>

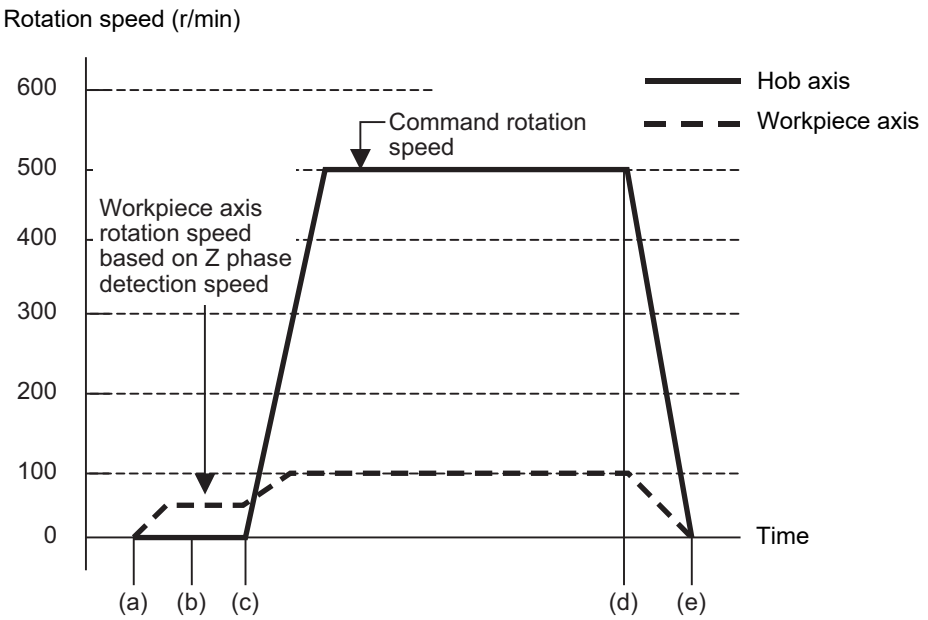

### Compensation control by workpiece axis

(1) Automatic compensation

The workpiece axis is controlled while constantly allowing for hob axis delay (advance) caused by disturbance, etc. This is especially effective in increasing the workpiece accuracy during heavy cutting. Automatic compensation is validated with parameters.

When the amount of the compensation added to the workpiece axis by hobbing conditions etc. changes greatly and rapidly, a servo alarm might occur for the workpiece axis. In that case, with the compensation amount through the primary delay filter, this enables the compensation amount fluctuation to further smoothen. However, the more widely the primary delay time constant is set, the more the effect of the compensation decreases, so the effect of the workpiece accuracy might not improve.

[Spindle NC parameter] (Machine parameter)

#3130 syn_spec/bit0: Tool spindle synchronization II (hobbing) automatic compensation selection

0 (OFF): No compensation

1 (ON): Hob axis delay (advance) is compensated with workpiece axis.

#3134 sphtc: Tool spindle synchronization II (hobbing) automatic compensation primary delay time constant

0: Primary delay filter control invalid

1 to 32768: Primary delay filter time constant setting unit (ms)

(2) Command compensation

Errors in the cutting workpiece shape caused by insufficient machine rigidity, etc., are compensated for with the workpiece axis command in the machining program.

(a) Command the workpiece axis compensation amount as an incremental position.

(b) Command the workpiece axis compensation amount direction in the workpiece axis rotation direction using a "+" command, and in the direction opposite the workpiece axis rotation using a "-" command.

(c) When the movement command is issued with an absolute position for the workpiece axis during the Tool spindle synchronization II (hobbing) mode, a program error (P32) will occur.

<Program example>

```
G114.3 H1 D9 E1 L10 P30. Q100. ;
S1 = 100;
G94;
N1 G01 Z20. F10;
N2 G91 G01 Z20. C5.;                <- Workpiece axis compensation amount
```

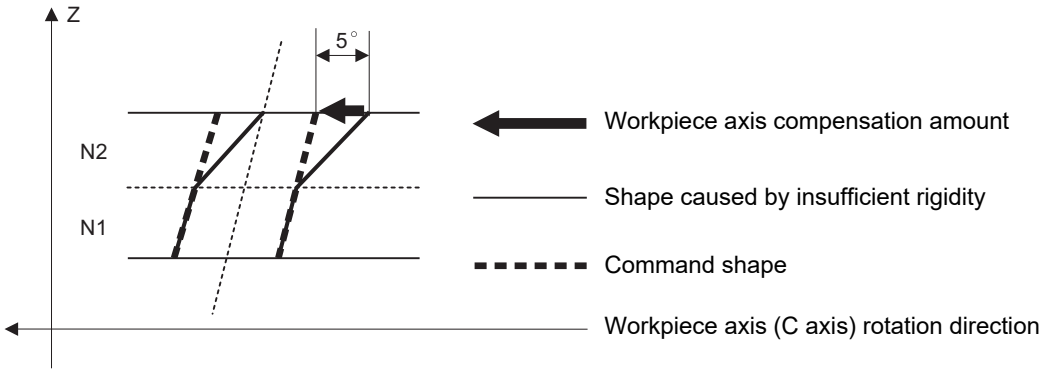


### Feedforward control during tool spindle synchronization II (hob machining) mode

A feedforward control can be issued for the hob axis and the workpiece axis during the tool spindle synchronization II (hobbing) mode.

(1) The hob axis feedforward control is controlled according to hob axis feedforward gain (parameter "#3135 sfwd_g").

(2) The workpiece axis feedforward control is controlled according to hob axis feedforward gain (parameter "#3135 sfwd_g") for the workpiece axis rotation contents of the hob axis rotation. The feedforward control is controlled according to workpiece axis feedforward gain (#2155 hob_fwd_g) for the helical compensation of the Z axis movement.

### Tool spindle synchronization II (hobbing) command during hob axis rotation

The hobbing mode command and hobbing cancel mode command can be issued during hob axis rotation.

(1) When the hobbing mode command is issued during hob axis rotation, the rotary axis designated as workpiece axis accelerates up to the speed according to the hob and workpiece axes' rotation ratio command. This acceleration follows the hobbing workpiece axis time constant (parameter "#2195 hob_tL") and uses the constant-gradient acceleration/deceleration control. If the setting of hobbing workpiece axis time constant is outside the setting range, set the maximum value in the range.

(2) After the workpiece axis finishes acceleration, phase alignment is carried out between hob and workpiece axes if the hobbing mode command contains R command.

(3) Synchronization is established after phase alignment is completed.

(4) If the hobbing cancel mode command is issued during hob axis rotation, the workpiece axis decelerates and stops. This deceleration follows the hobbing workpiece axis time constant (parameter "#2195 hob_tL"), and uses the constant-gradient acceleration/deceleration. If the setting of hobbing workpiece axis time constant is outside the setting range, set the maximum value in the range.

(5) Below is the operation example:

```
Txx00;                  Select a rotary axis
M** S4=500;             Forward run the 4th spindle (hob spindle) (at 500 r/min). (a)
:
G114.3 H4 D9 E1 L5 R0;  Hobbing mode ON (phase alignment with the phase difference of zero). (b)
:
G113;                   Hobbing mode OFF. (c)
:
G114.3 H4 D9 E1 L5 R0   Hobbing mode ON (phase alignment with the phase difference of zero). (d)
:
```

<Operation>

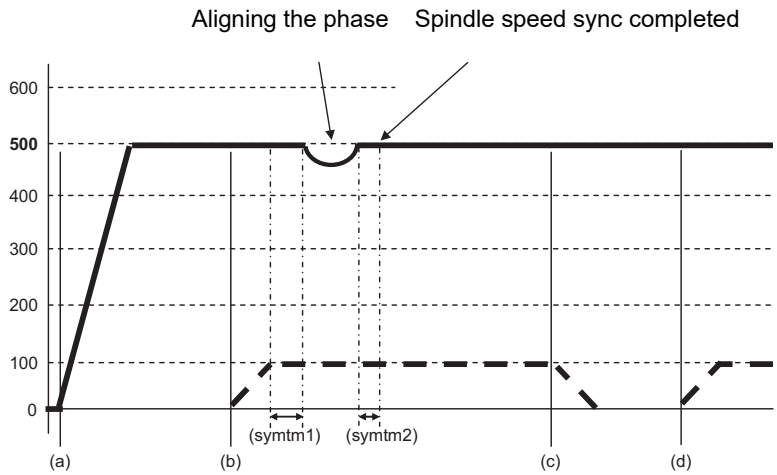


Hob axis

Workpiece axis

(symtm1) Phase sync start confirmation time

(symtm2) Phase sync end confirmation time

The acceleration/deceleration speed at phase alignment follows the setting of the parameter "#3130 sync_spec/bit1".

0: Step alignment method

1: Multi-step acceleration/deceleration method

### Retract during Hobbing Mode

Operating retract during hobbing mode prevents a destruction of the work when hobbing is interrupted.
When "Hob retract request" signal is input during hobbing mode, the control can retract the axis designated by parameter. Retract operation can also be carried out when a program error or operation error occurs.

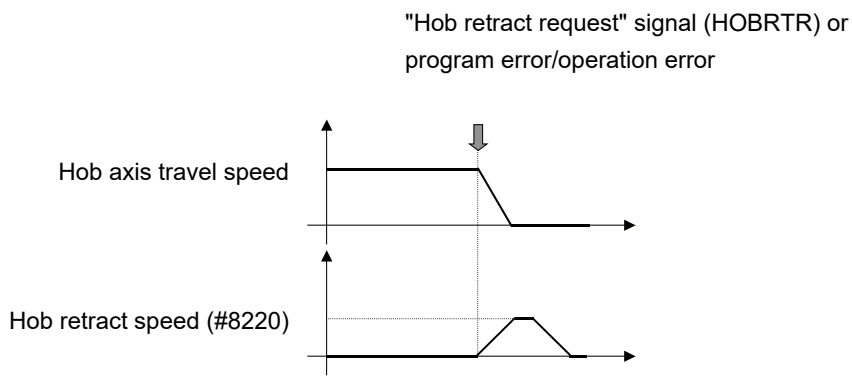


(1) The retract operation is carried out when "Hob retract request" signal (YCDE) is turned ON during hobbing mode. However, the retract operation is not performed while the "hob retract complete" signal is ON.
Also, after the operation has been completed, the tool is separated from the workpiece by the retract amount in hobbing mode; therefore, hob cutting is not performed properly.

(2) Retract operation can also be carried out when a program error or operation error occurs during hobbing mode. Specify whether to enable or disable a retract by alarm with the parameter "#19406" (Hob retract ON at alarm). However, if the parameter "#19406" (Hob retract ON at alarm) is enabled, a retract by alarm is not carried out when the "hob alarm retract inhibit" signal (YCDF) is turned ON.

(3) Retract is carried out in automatic operation mode. But when it is in automatic mode, retract can also be performed when not in automatic operation. (The hob axis and workpiece axis do not stop.)

(4) After the retract operation is completed, automatic operation pause.
When performing retract operation in automatic operation, retract operation can be interrupted by turning ON "Automatic operation pause" signal.
But when performing retract in a mode other than automatic operation, retract will not be interrupted by turning ON "Automatic operation pause" signal.
If the retract operation is interrupted by automatic operation pause or by switching the operation mode (automatic to manual), retract will not be resumed even when you activate automatically after the interruption. However, if a new retract factor occurs after automatic operation has been started, the retract operation is performed by the specified amount.

(5) No retract operation is performed during manual operation mode.

(6) The movement amount in the retract operation is determined by either the parameter "#8219 Hob retract amt 1" or "#8220 Hob retract amt 2", which is specified by the "hob retract amount selection" signal (YB20).
If the retract amount of all axes are set to "0", retract operation and automatic operation pause are not carried out.

(7) The parameters "#8219 Hob retract amt 1" and "#8220 Hob retract amt 2" are handled as radius values.

(8) Retract speed is set for each axis in the parameter "#8221 Hob retract speed".

(9) The "In hob retract" signal (XCAE) is ON during the retract operation. This signal is turned ON by either a retract triggered by an alarm or a retract triggered by the "hob retract request" signal.

(10) When the retract operation is completed, "Hob retract complete" signal (XCAF) turns ON. This signal is turned ON by either a retract triggered by an alarm or a retract triggered by the "hob retract request" signal.

(11) When retract is performed, acceleration and deceleration are carried out based on the travel command's acceleration/deceleration mode. However, when the parameter "#19407 Hob ret ac/dc OFF" is set to "1", step-wise acceleration/deceleration is carried out.
When the parameter "#19407 Hob ret ac/dc OFF" is set to "1", and retract speed is relatively fast, a servo alarm (excessive error etc.) may occur.

(12) Retract is not carried out for axes that are in movement.

(13) If mirror image is set for the retract axis, mirror image will be reflected on the retract operation. Therefore, the retract is carried out in the direction opposite to the setting.

(14) Machine lock is enabled for the retract axis.

(15) Automatic interlock is enabled for the retract axis. When not in automatic operation, automatic interlock is enabled for retract axis.

(16) Cutting feed override or rapid traverse override is not reflected on the retract axis.

(17) External deceleration is enabled for the retract axis.

(18) Dry run is disabled for the retract axis.

(19) Pre-interpolation acceleration/deceleration is disabled for a retract axis. Acceleration/deceleration after interpolation is applied instead.

(20) Retract can be performed for an axis that is under synchronization control. Retraction for a master axis causes the slave axis to move.

(21) Retract can be performed for an axis that is under inclined axis control. In accordance with the inclined axis' movement, the reference axis moves by the compensation amount.

### Program example

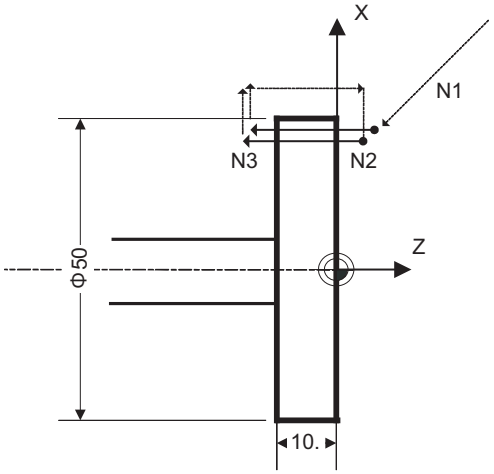


(1) Spur gear machining without phase alignment

```
          :
          :
      T1100;                  Rotary tool selection
      M43 S4=0;               S4 spindle stop (Rotation command forward rotation ON)
N1    G00 X48. Z5.;
          :
          :
      G114.3 H4 D9 E3 L10;    Tool spindle synchronization II (hobbing) mode ON
                              Hob axis: S4 spindle, Workpiece axis: C axis,
                              Number of hob threads: 3, Rotation ratio: 10 teeth
      S4=500;                 C axis starts forward run synchronized with S4.
                              The C axis rotation speed is 50r/min (S4 : C = 10 : 3).

      M80;                    Spindle rotation speed synchronization completion confirmation
                              (When the M code of spindle synchronization completion confirmation is set
                              to "M80")
      G94;                    Asynchronous feed mode selection

N2    G01 Z-15. F10;          1st cutting
      G00 X54.;
            Z5.:
      X46.;
N3    G01 Z-15. F10;          Final cutting
      G00 X54.;

      S4=0;                   S4 spindle stop
      G113;                   Tool spindle synchronization II (hobbing) mode OFF
      :
```

(2) Helical gear machining with phase alignment

```
        :
        :
        T1100;                          Rotary tool selection
        M43 S4=0;                       S4 spindle stop (Rotation command forward rotation ON)
N1      G00 X48. Z5.;
        :
        :
        G114.3 H4 D9 E3 L10 P30. Q2000  Tool spindle synchronization II (hobbing) mode ON
        R0.;                            Hob axis: S4 spindle, Workpiece axis: C axis,
                                        Number of hob threads: 3, Rotation ratio: 10 teeth
                                        Torsion angle : 30°, Module : 2 mm
                                        Phase alignment at phase difference 0
        S4=500;                         C axis starts forward run synchronized with S4.
                                        The C axis rotation speed is 150r/min (S4 : C = 10 : 3).

        M80;                            Spindle rotation speed synchronization completion confirmation
                                        (When the M code of spindle synchronization completion confirma-
                                        tion is set to "M80")
        G94;                            Asynchronous feed mode selection

N2      G01 Z-15. F10;                  1st cutting
        G00 X54.;
            Z5.:
        X46.;
N3      G01 Z-15. F10;                  Final cutting
        G00 X54.;


        S4=0;                           S4 spindle stop
        G113;                           Tool spindle synchronization II (hobbing) mode OFF
        :
```

(3) When hobbing several times successively with the hob axis rotated
Spur gear machining example with phase alignment

```
T1100;                      Rotary tool selection
M43 S4=0;                    S4 spindle stop (Rotation command forward rotation ON)
G00 X48.Z5.;
:
:
G114.3 H4 D9 E3 L10 R0;     Tool spindle synchronization II (hobbing) mode ON
                            Hob axis: S4 spindle, Workpiece axis: C axis,
                            Hob threads:3, 10 teeth
                            Phase alignment at phase difference 0
S4=500;                     C axis starts forward run synchronized with S4.
                            The C axis rotation speed is 150r/min (S4 : C = 10 : 3).

M80;                        Spindle rotation speed synchronization completion confirmation
                            (When the M code of spindle synchronization completion confirma-
                            tion is set to "M80")
G94;                        Asynchronous feed mode selection

G01 Z-15.F10;               1st cutting
G00 X54.;
    Z5.;
     X46.;
:
G113;                       Tool spindle synchronization II (hobbing) mode OFF
:
G114.3 H4 D9 E3 L10 R0;     Tool spindle synchronization II (hobbing) mode ON
M**;                        Spindle speed synchronization completion confirmation
G01 Z-15.F10;               N-th cutting
G00 X54.;
  Z5.;
  X44.;
:
G113;                       Tool spindle synchronization II (hobbing) mode OFF
:
G114.3 H4 D9 E3 L10 R0;     Tool spindle synchronization II (hobbing) mode ON
M80;                        Spindle rotation speed synchronization completion confirmation
G01 Z20. F10;               Final cutting
G00 X40.;
    Z-5.;
:
G113;                       Tool spindle synchronization II (hobbing) mode OFF
:
```

## Relationship with other functions

### Synchronous tapping cycle

(1) The synchronous tapping spindle cannot be commanded as the hob spindle of tool spindle synchronization II (hobbing).
The operation error (M01 1007) will occur, which causes automatic operation to pause.

(2) The synchronous tapping cannot be commanded using the hob axis in tool spindle synchronization II (hobbing).
The operation error (M01 1139) will occur, which causes automatic operation to pause.

### Spindle synchronization I, Spindle synchronization II, Tool spindle synchronization IA and IB (spindle-spindle, polygon), or Spindle superimposition control

(1) The tool spindle synchronization II (hobbing) mode cannot be commanded during spindle synchronization I, spindle synchronization II, tool spindle synchronization IA/IB (spindle-spindle, polygon), or spindle superimposition control ON. An operation error (M01 1005) occurs.

(2) Spindle synchronization I, spindle synchronization II, tool spindle synchronization IA/IB (spindle-spindle, polygon), or spindle superimposition control cannot be commanded during tool spindle synchronization II (hobbing) mode. An operation error (M01 1005) occurs.

### NC reset, Emergency Stop

(1) Even if the "reset" signal is input, the tool spindle synchronization II (hobbing) maintains synchronization. However, the synchronization is canceled at emergency stop.

### Mixed control (Cross axis control)

(1) The mixed control functions cannot be commanded in the part system where the tool spindle synchronization II (hobbing) is being performed. A program error (P501) will occur. However, hobbing that uses the axis subject to mixed control is possible.

(2) When the mixed control is commanded in the part system where the hobbing has been commanded, the operation error (M01 1035) will occur.

### Arbitrary axis exchange command (G140), arbitrary axis exchange return command (G141), reference axis arrange return command (G142)

(1) The arbitrary axis exchange command (G140), arbitrary axis exchange return command (G141) or reference axis arrange return command (G142) cannot be issued in the part system where the tool spindle synchronization II (hobbing) is being performed. A program error (P501) will occur. However, hobbing that uses the axis in arbitrary axis exchange mode is possible.

(2) The workpiece axis of tool spindle synchronization II (hobbing) cannot be commanded as the axis exchange target. Doing so triggers the arbitrary axis exchange disable state.

### Door interlock I / Door interlock II

(1) If door interlock I or door interlock II is turned ON during the tool spindle synchronization II (hobbing) mode, tool spindle synchronization II (hobbing) will be canceled because synchronization cannot be maintained.

### 3-dimensional coordinate conversion

(1) The 3-dimensional coordinate conversion cannot be commanded in the part system for tool spindle synchronization II (hobbing). A program error (P922) will occur.

(2) Tool spindle synchronization II (hobbing) cannot be commanded during 3-dimensional coordinate conversion. A program error (P921) will occur.

### High-speed High-accuracy Control

When tool spindle synchronization II (hobbing) is commanded while the high-speed high-accuracy control is valid or when high-speed high-accuracy control is commanded during tool spindle synchronization II (hobbing), high-speed high-accuracy control is temporarily canceled, and tool spindle synchronization II (hobbing) is executed preferentially.

### Precautions and restrictions

(1) When cutting helical gear, correct cutting feed will not be possible in the synchronous feed mode, so always cut in the asynchronous feed mode.

(2) To carry out phase alignment when machining a helical gear, phase alignment will not be carried out correctly if the Z axis is moving, so always carry out phase alignment control when the Z axis is stopped.

(3) The linear-type rotary axis for the absolute position system cannot be used as the hobbing workpiece axis. If used, the absolute position detection alarm (Z70 0002) will occur after the power was turned OFF and ON.

(4) If hobbing control is carried out using the linear-type rotary axis as the hob axis, the current value will be illegal when the hobbing is canceled. In this case, preset the counter after canceling hob machining.

(5) If the hob axis rotation ratio is set to "0", phase alignment will not be carried out. Even if the workpiece axis phase shift amount is commanded, it is ignored.

(6) When "Hob axis delay (advance) allowable angle" (parameter "#3133 spherr") is "0", "Hob axis delay excess" (X18B3) is not output.

(7) During acceleration/deceleration of hob axis, "Hob axis delay angle" (R6516) and "Maximum hob axis delay angle" (R6517) are not updated.

(8) When the maximum hob axis delay (advance) angle (R6516) exceeds the hob axis delay (advance) allowable angle (parameter "#3133 spherr"), CNC only outputs the "delay excess" signal (X18B3). For information about how to take an action, contact the MTB representative.

(9) G00 of G01 command for the workpiece axis from the machining program should be an incremental command. When an absolute command is issued, program error (P32) occurs.

(10) Always set the position loop gain of the hob axis and the workpiece axis to the same value. If different values are set, the machining accuracy is not warrantable.

- Hob axis : #13003 SP003 , #13036 SP036/bit4
- Workpiece axis (NC axis) : #2203 SV003 , #2204 SV004 , #2257 SV057
- Workpiece axis (Spindle/C axis) : #13002 SP002 , #13035 SP035/bitC

(11) Do not command hobbing (tool spindle synchronization II) during synchronous control of the workpiece axis (C1 axis) and rear workpiece axis (C2 axis). When hobbing is commanded during synchronous control, rear workpiece axis (C2 axis) and workpiece axis (C1 axis) will not operate in synchronization (because this does not trigger an alarm), and this may twist the workpiece.

[Hobbing model that applies a synchronous control between the workpiece C1 axis and C2 axis]

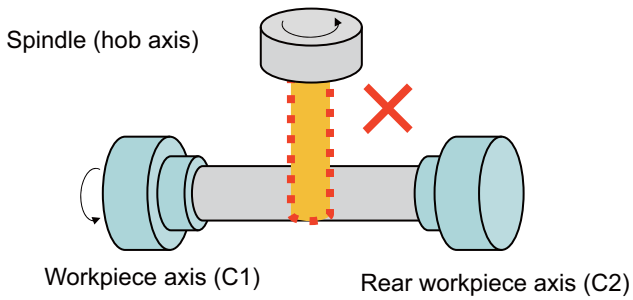


<Note>

- If hobbing is commanded during synchronous control, only operations for the spindle (hob axis) and workpiece axis (C1 axis) can be carried out.

(12) Command the hobbing mode with the workpiece axis stopped. When hobbing is commanded while the workpiece axis is rotating, hobbing mode turns ON after the stop of the workpiece axis was confirmed.

# 18.4 Spindle Superimposition ; G164, G113/G113.1

## Function and purpose

Spindles are controlled by superimposing the rotation speed of one spindle on the rotary speed of other spindle. Use this function when the tool spindle needs to be rotated with the superimposed speed on the spindle rotation speed.
If this function is used when tapping is performed to the center of a workpiece clamped to a spindle during its rotation, for instance, the tapping can be performed in the center of the workpiece (shown in Figure (b) below) during turning machining (shown in Figure (a) below) so that the cycle time can be reduced.

(1) Conventional method

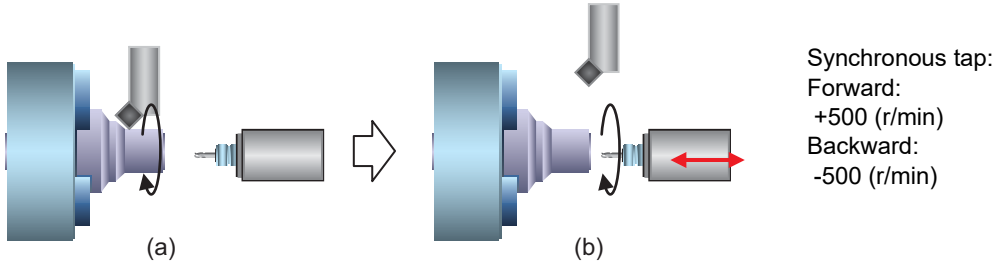


S1 = 1000 (r/min)
Normal turning machining

S1 = 0 (r/min)
The rotation of the front workpiece is stopped, and then the tapping is started at the front center.

(2) Using the spindle superimposition control

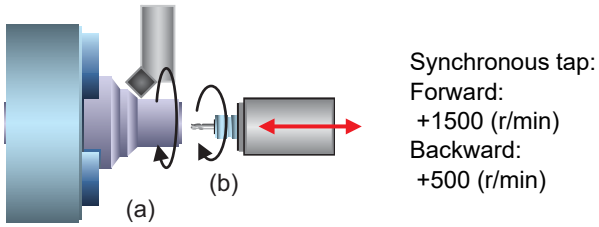


S1 = 1000 (r/min)
Turning (a) and tapping at the front center (b) are performed simultaneously

The following describes the meanings of the terms used in this manual.

| Term | Meaning |
|---|---|
| Command rotation speed | Rotation speed that is commanded for the reference spindle or superimposed spindle |
| Superimposed-spindle rotation speed | Spindle end rotation speed of the superimposed spindle (including the rotation speed of the reference spindle). |
| Spindle superimposition control state | State in which the reference or superimposed spindle is in synchronous control. |
| Differential velocity tap | Synchronous tap cycle under superimposed-spindle control (tap machining by superimposed spindle). |

### Command with spindle superimposition and other spindle synchronization functions combined

The other spindle synchronization functions (Spindle synchronization I/ Spindle synchronization II/ Tool spindle synchronization IA/ Tool spindle synchronization IB/ Tool spindle synchronization II/ Spindle superimposition control) cannot be commanded while this function is running. Also, this function cannot be commanded while the above functions are being executed. In these cases an operation error (M01 1005) will occur.
However, when the Multiple spindle synchronization set control function is enabled, multiple spindle synchronization functions can be commanded simultaneously. The validity of this function depends on the MTB specifications (parameter "#1440 multi_sp_syn"). For details, refer to "18.5 Multiple Spindle Synchronization Set Control".

## Command format

### Spindle superimposition valid command

```
G164 H__D__;
```

| | |
|---|---|
| H | Reference spindle selection (Command the spindle number or spindle name.) (*1)<br>[Setting range]<br>Spindle No.: 1 to n (n: Maximum number of available spindles)<br>Spindle name: 1 to 9 |
| D | Superimposed spindle selection (Command the spindle number or spindle name.) (*1)<br>Command the rotation direction for the reference spindle using the sign of the D address value.<br>[Setting range]<br>Spindle No.: 1 to n or -1 to -n (n: Maximum number of available spindles)<br>Spindle name: 1 to 9 or -1 to -9 |

(*1) There are two spindle command methods: spindle number method and spindle name method.
When the name (1 to 9) has been specified for all the spindles with the parameter "#3077 Sname" (Spindle command name), a command is given with the spindle name. For others, command with the spindle number. These settings depend on the MTB specifications.

**Note**

(1) If the spindle that is not located at the H or D address is commanded, it causes a program error (P35).
(2) If the analog spindle is set to the H or D address, it causes a program error (P700).
(3) If the H or D address is not commanded, it causes a program error (P33).

### Spindle superimposition control cancel command

```
G113;
```

```
G113.1;
```

**Note**

(1) Canceled by the PLC signal or emergency stop. The operation of the PLC signal depends on the MTB specifications.
(2) An axis address that involves any travel cannot be put in the same block as the spindle superimposition cancel command. Doing so causes the program error (P33) when the cancel command is issued, which causes automatic operation to pause.
(3) For G code list 6 and 7, only G113.1 is available as the cancel command from the program.

## Detailed description

### Superimposed-spindle operation

(1) The spindle is set in the spindle superimposition mode with the spindle superimposition control command (G164). (The PLC signal is set on.)

(2) The rotation speed for the reference spindle or superimposed spindle can be changed during spindle superimposition.

(3) The rotation speed and rotation direction of the reference spindle are set to those commanded for the reference spindle.

(4) If the forward run or reverse run command is input to the superimposed spindle, the spindle accelerates or decelerates up to the rotation speed superimposed with the reference spindle, and it is placed into the spindle superimposition control state after the superimposition speed has been reached. (The PLC signal is set on.) Check that the spindle is set in the spindle superimposition control state, and start machining. The method for checking the state of the PLC signal depends on the MTB specifications.

(5) If the speed of the superimposed spindle is changed in the spindle superimposition control state, the superimposed spindle accelerates or decelerates up to the rotation speed superimposed with the reference spindle.

(6) The rotation speed of the superimposed spindle is obtained in the following formula.

[Superimposed rotation speed] = ([Sign of D command] x [Rotation direction of reference spindle command] x [Rotation speed of reference spindle command]) + ([Rotation direction of superimposed spindle command] x [Rotation speed of superimposed spindle command])

(7) If the spindle superimposition cancel command (G113/G113.1) is issued, the spindle superimposition control state or spindle superimposition mode is canceled. (The PLC signal is set to OFF.)

(8) The program example below shows the operation of the reference spindle under spindle superimposition and superimposed spindle.

<Program example>

| | |
|---|---|
| M03 S1=1000 | Command 1000 (r/min) to the 1st spindle with the forward run command. (a) |
| : | |
| M33 S3=250 | Command 250 (r/min) to the 3rd spindle with the forward run command. (b) |
| : | |
| G164H1D3 | Superimpose the 3rd spindle (superimposed spindle) on the 1st spindle (reference spindle) with the forward run command. (c) |
| Mxxxx | Check that spindle superimposition is completed. (d) |
| M4 S1=500 | Command 500 (r/min) to the 1st spindle (reference spindle) with the reverse run command. (e) |
| : | |
| M34 S3=500 | Command 500 (r/min) to the 3rd spindle (superimposed spindle) with the reverse run command. (f) |
| : | |
| G113 | Cancel the spindle superimposition control. (g) |
| : | |

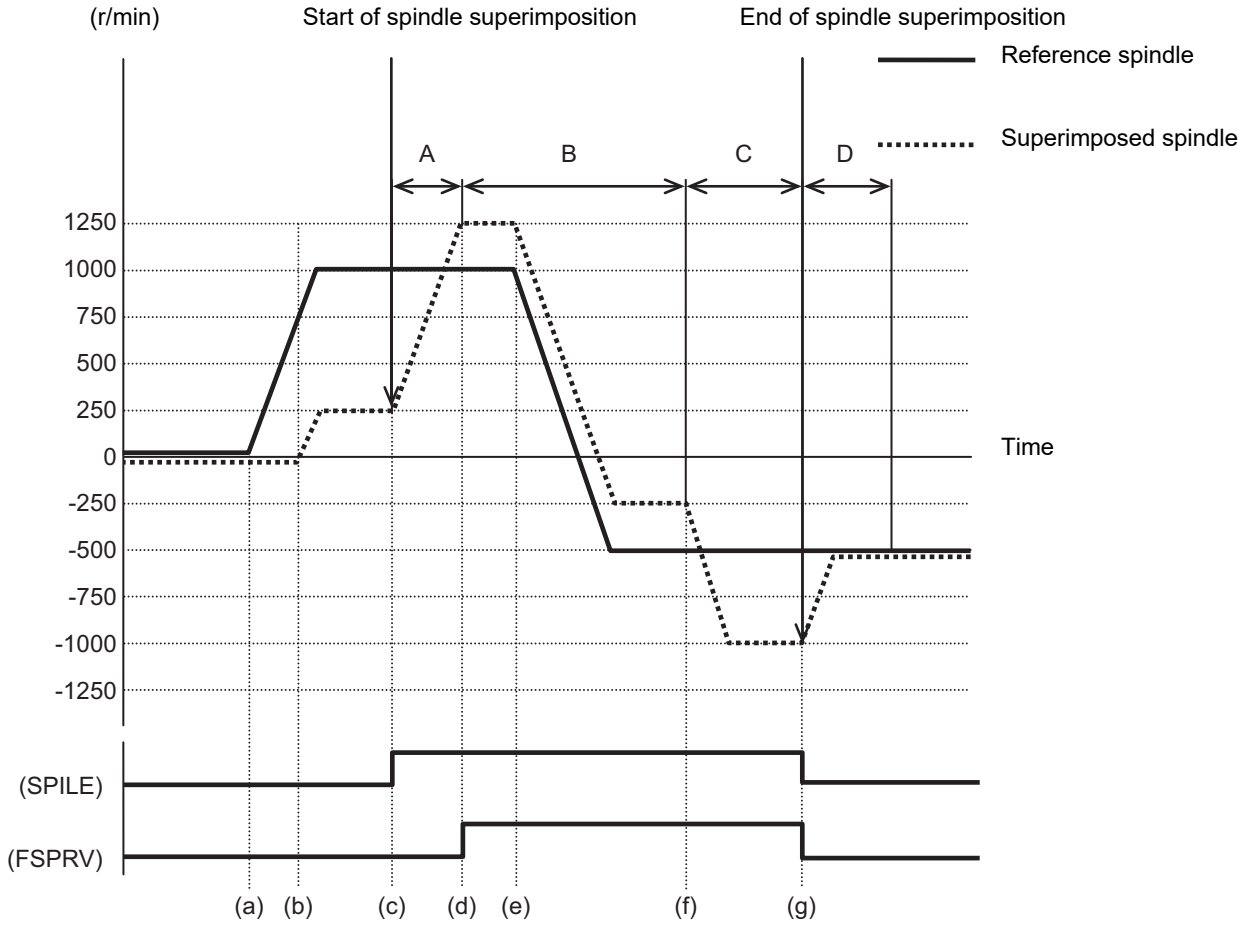


SPILE (Under spindle superimposition control mode): Setting ON outputs the PLC signal indicating that the spindle is in the spindle superimposition control mode.
FSPRV (Spindle rotation speed synchronization completion): Setting ON outputs the PLC signal indicating that the spindle superimposition has been completed.

(a) The rotation speed of the superimposed spindle in the superimposition mode between intervals A and C is obtained in the following formula.

[Superimposed rotation speed] = ([Sign of D command] x [Rotation direction of reference spindle command] x [Rotation speed of reference spindle command]) + ([Rotation direction of superimposed spindle command] x [Rotation speed of superimposed spindle command])

(b) If the spindle superimposition is commanded, the superimposed spindle accelerates in the speed mode up to the rotation speed that is obtained in the formula shown in item (1). (Interval A)

(c) In interval B, the rotation speed command of the reference spindle is changed from 1000 (r/min) to -500 (r/min), and the superimposed spindle also accelerates/decelerates synchronously with the acceleration/deceleration of the reference spindle. The rotation speed of the superimposed spindle is changed from 1250(r/min) to -250 (r/min).

(d) In the superimposition mode, the reference spindle or superimposed spindle accelerates/decelerates (between intervals B and C) as shown below.
First, each spindle synchronization time constant parameter (#3049 spt) is compared.
The spindle is accelerated/decelerated based on the spindle synchronization multi-step acceleration/deceleration speed parameter settings (combination of "#3049 spt" and "#3054 sptc1" to "#3060 sptc7" and combination of "#3061 spdiv1" to "#3067 spdiv7") of the time constant that is longer. These parameters are all determined in the MTB specifications.

(e) The spindle superimposition mode signal is set on with the spindle superimposition command (G164). This is set off with the cancel command.

(f) The spindle rotation speed synchronization completion signal is set to ON when each of the reference and superimposed spindles reaches the commanded rotation speed in the spindle superimposition mode. Be sure to check that this signal is set on before starting machining. This is set off with the cancel command. The operation of the PLC signal depends on the MTB specifications.

(g) After the spindle superimposition is canceled (interval D), the superimposed spindle decelerates in the speed mode, and finally reaches the commanded rotation speed.

(9) If the forward run command or reverse run command is not input to the superimposed spindle when the spindle superimposition is commanded, the superimposed spindle is set in the servo ON state, and accelerates up to the rotation speed of the reference spindle to be set in the spindle superimposition control state (in the same way as when the rotation speed 0 (r/min) is commanded to the superimposed spindle).
If the forward run command or reverse run command is input in this state, the rotation speed is set to the value based on the "rotation speed of the reference spindle", "rotation direction of the reference spindle by the D command", and "rotation speed commanded to the superimposed spindle" that are commanded in advance. If the forward run command or reverse run command of the superimposed spindle in the spindle superimposition state is set off, the spindle accelerates/decelerates up to the rotation speed of the reference spindle (in the same way as when the rotation speed 0 (r/min) is commanded to the superimposed spindle).

<Program example>

| | |
|---|---|
| SI=1000; | Command 1000 (r/min) to the 1st spindle (reference spindle). |
| : | |
| M03; | 1st spindle (reference spindle) forward run command (a) |
| : | |
| G164H1 D3 ; | Superimpose the 3rd spindle (superimposed spindle) on the 1st spindle (reference spindle) with the forward run command. (b) |
| : | |
| S3=250; | Command 250 (r/min) to the 3rd spindle (superimposed spindle). |
| : | |
| M33; | 3rd spindle (superimposed spindle) forward run command (c) |
| : | |
| M35; | 3rd spindle (superimposed spindle) forward run command OFF (d) |
| : | |
| G113; | Cancel the spindle superimposition. (e) |

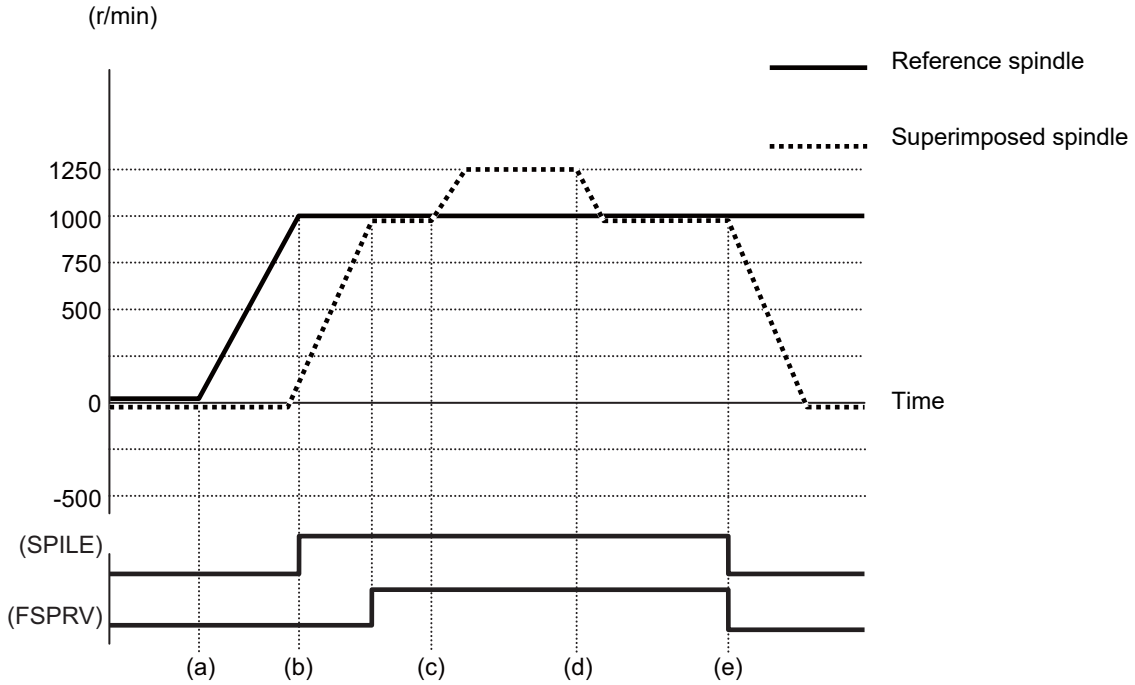


SPILE (Under spindle superimposition control mode): Setting ON outputs the PLC signal indicating that the spindle is in the spindle superimposition control mode.
FSPRV (Spindle rotation speed synchronization completion): Setting ON outputs the PLC signal indicating that the spindle superimposition has been completed.

(10) If neither the forward run command nor the reverse run command is input to the reference spindle when the spindle superimposition control is commanded, the superimposed spindle runs normally. After this, if the forward run command or reverse run command is input to the reference spindle, the rotation speed accelerates/decelerates up to the rotation speed based on the "rotation speed of the reference spindle", "rotation direction of the reference spindle by the D command", and "rotation speed commanded to the superimposed spindle" that are commanded in advance. Then, it is set into the spindle superimposition state.

<Program example>

| | |
|---|---|
| S3=500; | Command 500 (r/min) to the 3rd spindle (superimposed spindle). |
| : | |
| M33; | 3rd spindle (superimposed spindle) forward run command (a) |
| : | |
| G164H1 D3 ; | Superimpose the 3rd spindle (superimposed spindle) on the 1st spindle (reference spindle) with the forward run command. (b) |
| : | |
| S1=750; | Command 750 (r/min) to the 1st spindle (reference spindle). |
| : | |
| M03; | 1st spindle (reference spindle) forward run command (c) |
| : | |
| G113; | Cancel the spindle superimposition. (d) |

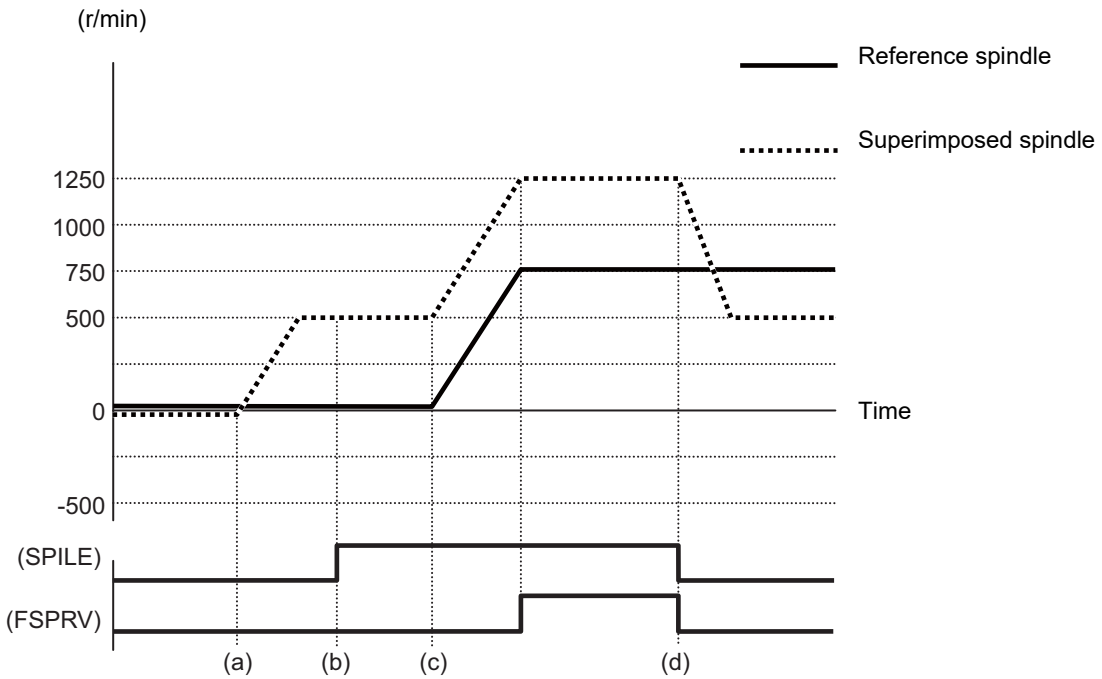


SPILE (Under spindle superimposition control mode): Setting ON outputs the PLC signal indicating that the spindle is in the spindle superimposition control mode.
FSPRV (Spindle rotation speed synchronization completion): Setting ON outputs the PLC signal indicating that the spindle superimposition has been completed.

### Acceleration/deceleration under spindle superimposition

(1) Acceleration/deceleration of reference spindle or superimposed spindle under spindle superimposition

When the reference spindle or superimposed spindle accelerates or decelerates during spindle superimposition, the superimposed spindle also accelerates or decelerates synchronously with the acceleration/deceleration of the reference spindle. Therefore, select a shelving acceleration/deceleration pattern of the reference spindle or superimposed spindle acceleration/deceleration patterns in order to perform acceleration/deceleration. This is also applied to the acceleration/deceleration pattern particular to the superimposed spindle.

<Example of operation>

The following shows an operation example when the rotation speed commanded to the reference spindle is changed to 3000 (r/min) while the reference spindle and superimposed spindle set to the acceleration/deceleration pattern shown below is rotating at 1000 (r/min) for the reference spindle and at 3000 (r/min) for the superimposed spindle in the spindle superimposition state.

The reference spindle is set to the acceleration/deceleration pattern (A), but the superimposed spindle is set to the shelving acceleration/deceleration pattern; therefore, select the acceleration/deceleration pattern (B) of the superimposed spindle to perform acceleration/deceleration.

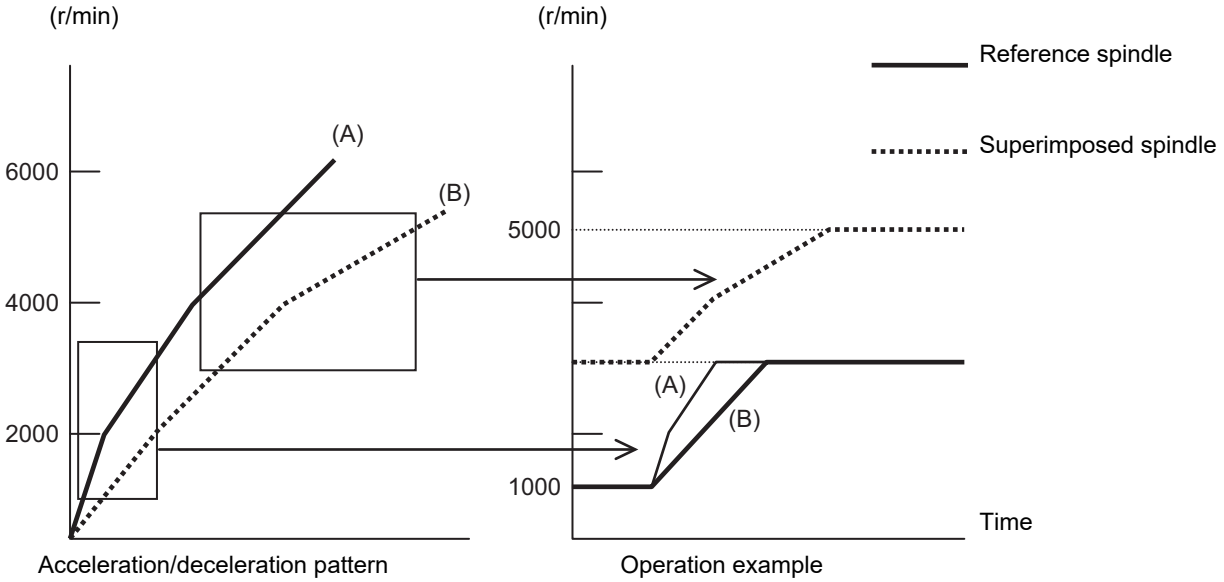

(2) When the acceleration/deceleration speed is superimposed between the reference and superimposed spindles:

If the command speed or rotation direction of the reference spindle or superimposed spindle is changed in the spindle superimposition state, the spindle accelerates/decelerates based on the spindle synchronization acceleration/deceleration speed time constant or the time constant of the doubled spindle synchronization acceleration/deceleration speed time constant that is specified in the parameter.

The table below shows which time constant is to be used.

When based on the spindle synchronization acceleration/deceleration speed time constant, "x1" is shown. When based on the doubled spindle synchronization acceleration/deceleration speed time constant, "x2" is shown.

These parameter settings depend on the MTB specifications.

| | | | Reference spindle | | | | |
|---|---|---|---|---|---|---|---|
| | | | At acceleration | | At deceleration | | In normal mode |
| | | | Forward rotation | Reverse rotation | Forward rotation | Reverse rotation | |
| Superimposed spindle | Forward rotation | At acceleration in forward run | x2 | x1 | x1 | x2 | x1 |
| | | At acceleration in reverse run | x1 | x2 | x2 | x1 | x1 |
| | | At deceleration in forward run | x1 | x2 | x2 | x1 | x1 |
| | | At deceleration in reverse run | x2 | x1 | x1 | x2 | x1 |
| | | In normal mode | x1 | x1 | x1 | x1 | x1 |
| | Reverse rotation | At acceleration in forward run | x1 | x2 | x2 | x1 | x1 |
| | | At acceleration in reverse run | x2 | x1 | x1 | x2 | x1 |
| | | At deceleration in forward run | x2 | x1 | x1 | x2 | x1 |
| | | At deceleration in reverse run | x1 | x2 | x2 | x1 | x1 |
| | | In normal mode | x1 | x1 | x1 | x1 | x1 |

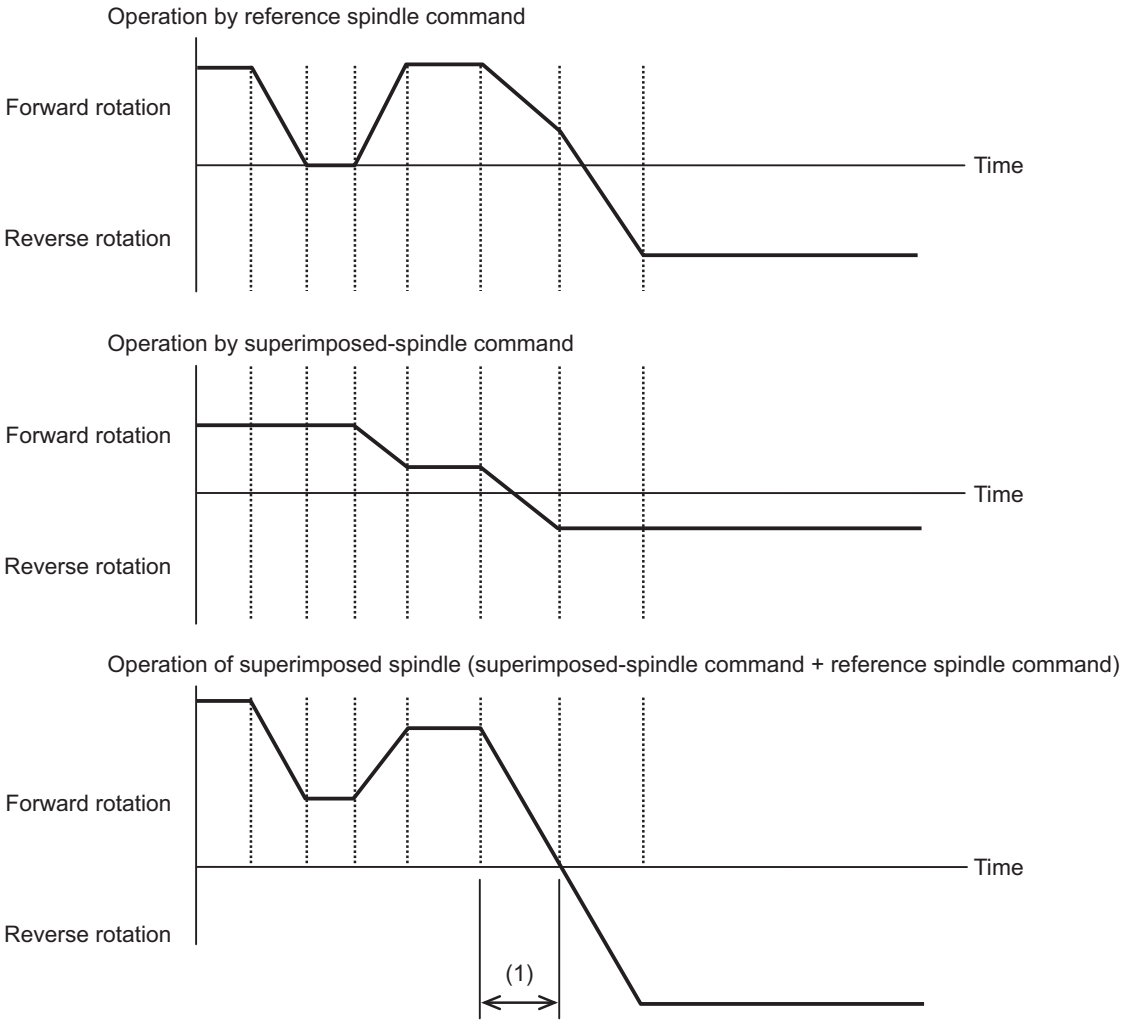


In interval "A", the forward-run deceleration of the reference spindle and the forward- and reverse-run deceleration of the superimposed spindle are carried out frequently; therefore, the acceleration/deceleration time constant is doubled for both the reference and superimposed spindles.

## Rotation speed clamp

(1) Maximum rotation speed clamp

In the spindle superimposition state, the reference spindle is clamped at the maximum rotation speed of the lower rotation speed of the maximum rotation speed of the reference spindle and the maximum rotation speed of the superimposed spindle that are designated in parameters. The superimposed spindle is clamped if the maximum rotation speed of the superimposed spindle is exceeded. In this case, a displacement occurs between the reference and superimposed spindles.
If either the reference spindle or the superimposed spindle is clamped, the state shifts to under spindle superimposition clamp. (The PLC signal is set on.)

After the spindle superimposition has been commanded, a clamp is triggered if the maximum rotation speed of the superimposed spindle is exceeded before the spindle is placed into the spindle superimposition state. In this case, a displacement also occurs between the reference and superimposed spindles, and the state shifts to under spindle superimposition clamp. (The PLC signal is set on.)

<Program example>

| | |
|---|---|
| S1=3000; | Command 3000 (r/min) to the 1st spindle (reference spindle). |
| : | |
| M03; | 1st spindle (reference spindle) forward run command (a) |
| : | |
| S3=1000; | Command 1000 (r/min) to the 3rd spindle (superimposed spindle). |
| : | |
| M33; | 3rd spindle (superimposed spindle) forward run command (b) |
| : | |
| G164 H1 D3; | Superimpose the 3rd spindle (superimposed spindle) on the 1st spindle (reference spindle) with the forward run command. (c) |
| : | |
| S3=3000; | Command 3000 (r/min) to the 3rd spindle (superimposed spindle). (d) |
| M4 S1=4000; | Command 4000 (r/min) to the 1st spindle (reference spindle). (e) |

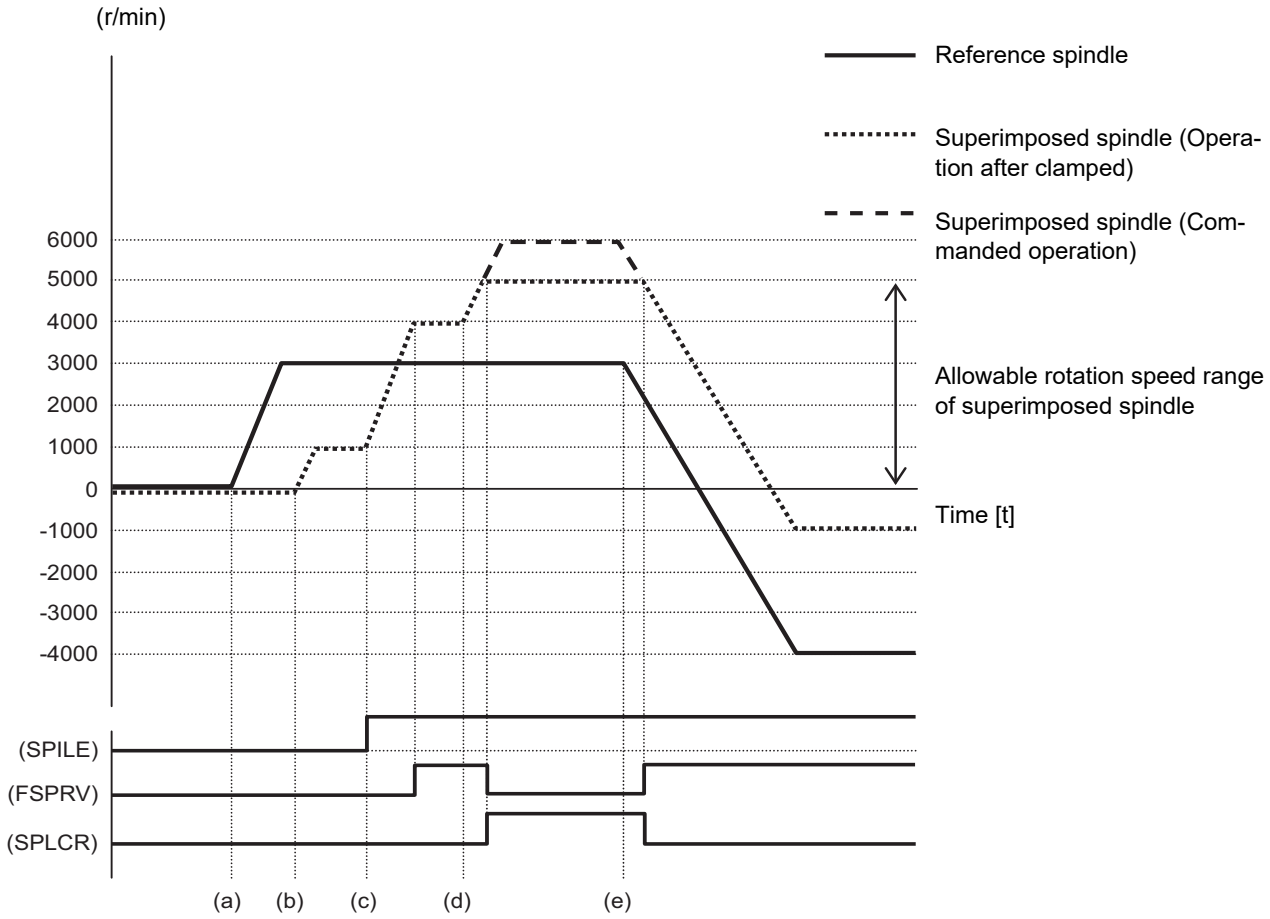


(2) Minimum rotation speed clamp

In the spindle superimposition state, the minimum rotation speed clamp is not carried out for the superimposed spindle.

If the rotating spindle is set to the superimposed spindle under spindle superimposition at the minimum rotation speed, the minimum rotation speed clamp is canceled, and the spindle rotates at the commanded rotation speed. When the spindle is released from the superimposed spindle, its minimum rotation speed clamp is enabled again.

## Relationship with other functions

### Synchronous tapping cycle

(1) If the synchronous tap cycle is commanded to the reference spindle in the spindle superimposition state, it causes an operation error (M01 1131).

(2) The synchronous tap cycle command is enabled for the superimposed spindle under the spindle superimposition control state. (This is hereinafter referred to as "differential velocity tap".)
The example below shows a differential velocity tapping case in which tapping is carried out by the rotary tool while the main spindle is turning. The tap axis (Z2) and tool spindle (S3) are synchronized with the synchronous tap cycle command to carry out tapping by using the main spindle (S1) as the reference spindle and rotating the tool spindle (S3) as the superimposed spindle.

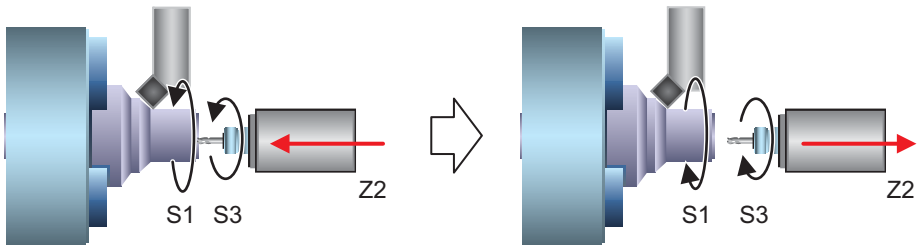


S1 = 1000 (r/min)
Synchronous tap S3
Forward: +1500 (r/min)
Differential speed between S1 and S3: 500 (r/min)

S1 = 1000 (r/min)
Synchronous tap S3
Backward: +250 (r/min)
Differential speed between S1 and S3: 750 (r/min)

| $1 | $2 | | |
|---|---|---|---|
| : | : | | |
| M03 S1=1000; | : | [$1]S1=1000 r/min Forward run command | (a) |
| : | G164 H1 D3; | [$2] Spindle superimposition control<br>S1: Reference spindle, S3: Superimposed spindle | (b) |
| : | M***; | [$2] Spindle superimposition completed | (c) |
| : | G0Z-2; | [$2] Z2 axis positioning | (d) |
| : | G98 G84 X0. Z10. R2. F1. P0.5 S500 ,S750 ,R1; | [$2] Synchronous tap command (Forward tapping, Pitch: 1 mm, Forward speed: 500 r/min, Backward speed: 750 r/min) | (e) |

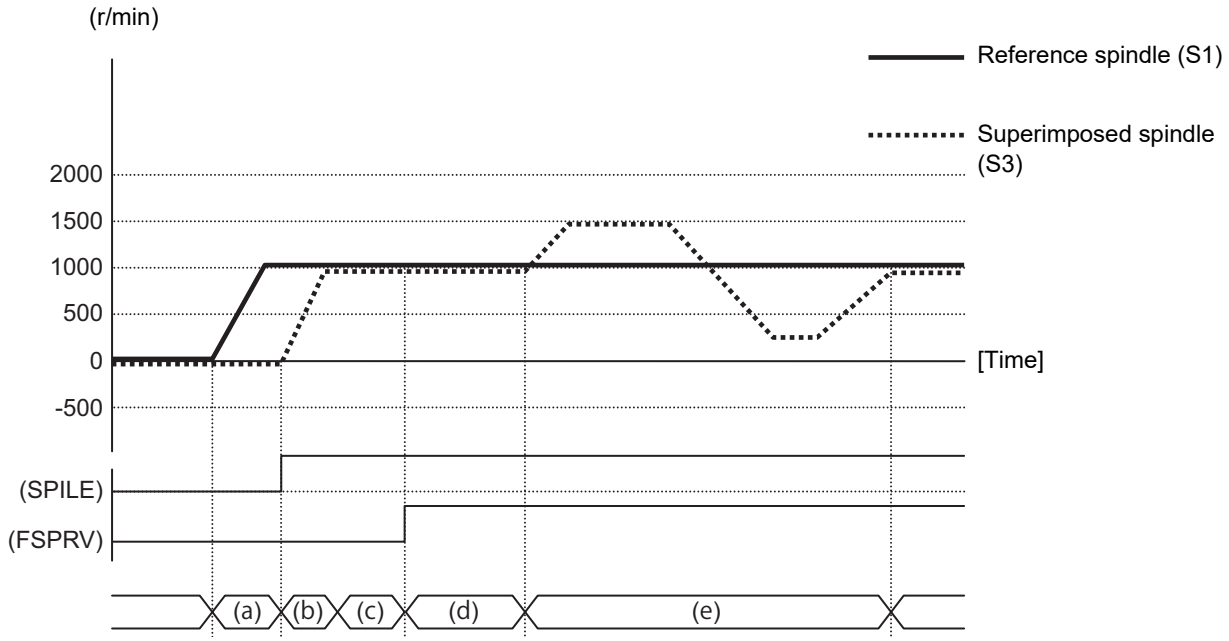


(3) In the spindle superimposition control state, the acceleration/deceleration of the differential velocity tap is performed with the synchronous tap acceleration/deceleration pattern (constant-gradient or multi-step acceleration/deceleration) of the superimposed spindle side in the area of (commanded rotation speed of reference spindle) + (commanded rotation speed for synchronous tap of superimposed spindle). There are two types of acceleration/deceleration patterns: constant-gradient and multi-step acceleration/deceleration. The pattern to be used depends on the MTB specifications. (Parameter "#1223 aux07 bit7")

<Example of operation>

The example below shows how to select the synchronous tapping time constant when the synchronous tap acceleration/deceleration time constant is designated as shown below.

When the rotation speed command of the differential velocity tap is set to 500 (r/min) while the reference spindle is rotating at 3000 (r/min), the rotation speed of the differential velocity tap spindle is set to 2500 (r/min) to 3500 (r/min).

| Types of acceleration/deceleration patterns | Rotation speed area | Pattern to be used |
|---|---|---|
| Multi-step acceleration/deceleration | 2500 (r/min) to 3000 (r/min) | (b) shown below |
| | 3000 (r/min) to 3500 (r/min) | (c) shown below |
| Constant-gradient acceleration/deceleration | (d) shown below | |

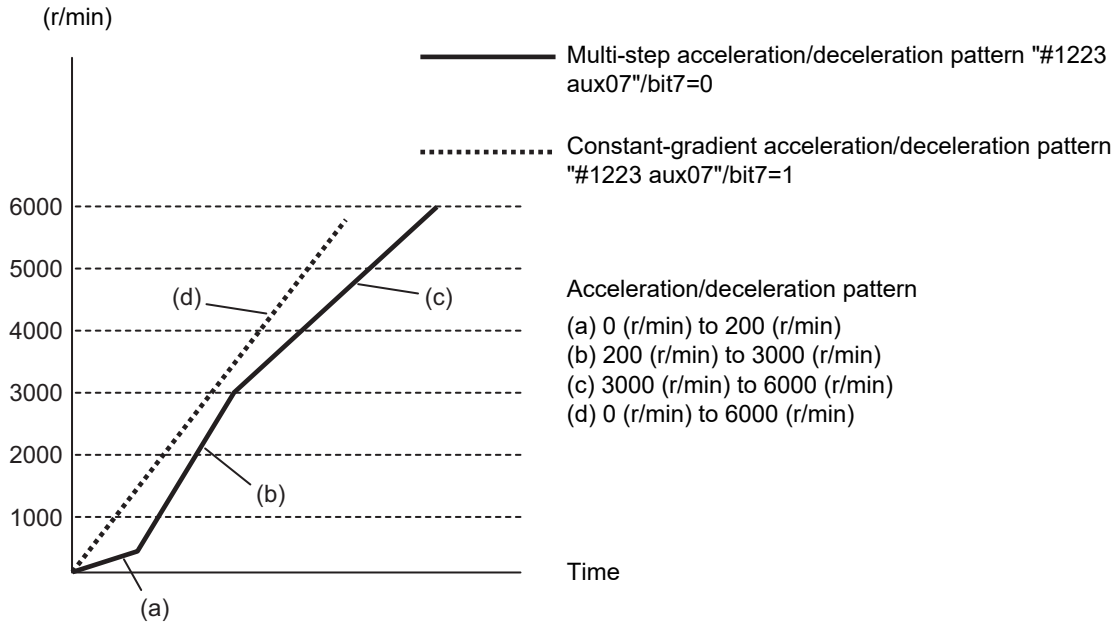


(4) The spindle is decelerated and stopped even when the differential velocity tap starting operation is set as the reference position return. These settings depend on the MTB specifications (parameter "#3106 zrn_typ/bit4").

(5) The normal synchronous tap cycle uses the interpolation mode (#13002 SP002) as the spindle position loop gain, but the spindle synchronous position loop gain (#13003 SP003) is used during differential velocity tapping. Therefore, the feed axis position loop gain at differential velocity tapping is automatically switched to the spindle synchronous position loop gain.
However, it differential velocity tapping is carried out in combination with the control axis superimposition, a greater synchronization error occurs if the gain of the control axis / superimposed axis (reference or superimposed axis) is not the same as that of the synchronous tap spindle.
Therefore, the axis servo gain (#2017 tap_g) of the reference axis in the control axis superimposition mode and the superimposed spindle must be set to the same value as that of the interpolation mode position loop gain (#13002 SP002) and spindle synchronous position loop gain (#13003 SP003) of the superimposed spindle. These parameter settings vary depending on the MTB specifications. Refer to the instruction manual issued by the MTB for details.

(6) A command (S command, spindle override, rotation command OFF, or spindle stop), which changes the rotation speed of the reference spindle during differential velocity tapping, is ignored even if issued. Such a command is enabled after differential velocity tapping has been completed. While a command is ignored, the speed change invalid signal (SPNCH) is output.

(7) If the rotation speed of the superimposed spindle is clamped when the differential velocity tap command is issued, it causes an operation error (M01 1132), and machining stops.

(8) If the constant surface speed control is commanded to the reference or superimposed spindle during differential velocity tapping, it causes an operation error (M01 1133), and machining stops.

(9) If the differential velocity tap is commanded to the reference or superimposed spindle during constant surface speed control, it causes an operation error (M01 1133), and machining stops.

(10) If the synchronous tapping spindle is commanded as the reference or superimposed spindle of the spindle superimposition control, an operation error (M01 1007) will occur.

### Spindle override (SP1 to SP4)

(1) If the spindle override of the reference spindle is changed in the spindle superimposition control state, the spindle runs in the same way as when the commanded rotation speed of the reference spindle is changed.

(2) If the spindle override of the superimposed spindle is changed in the spindle superimposition control state, the spindle runs in the same way as when the commanded rotation speed of the superimposed spindle is changed. When the override is set to 0%, the spindle runs in the same way as when the rotation speed is set to 0 (r/min).

### Spindle position control (Spindle/C axis control)

The C axis control is not applicable to the reference or superimposed spindle in the spindle superimposition mode. If the C axis control is commanded, it causes an operation error (M01 1026). Also, if the spindle superimposition control for the reference or superimposed spindle is commanded to the spindle in the C axis mode, it causes an operation error (M01 1026).
Before commanding the C axis control, cancel the spindle superimposition mode.

### Constant surface speed control

(1) The constant surface speed control command is enabled for the reference spindle in the spindle superimposition control state.
The spindle superimposition command can be issued while the reference spindle is in process of constant surface speed control.

(2) If the constant surface speed control is commanded to the superimposed spindle in the spindle superimposition control state, the spindle is superimposed by the rotation speed that is calculated with the constant surface speed control formula. When the spindle superimposition is commanded to the superimposed spindle during constant surface speed control, the spindle is superimposed by the rotation speed that is calculated with the constant surface speed control formula.

(3) If the constant surface speed control is commanded to the reference spindle or superimposed spindle during differential velocity tapping, it causes an operation error (M01 1133), and machining stops.

### Spindle clamp speed setting

(1) Maximum clamp rotation speed (G92 S command)

The maximum clamp rotation speed specified with the address S following G92 is valid for the reference spindle or superimposed spindle.
The maximum clamp rotation speed of the superimposed spindle is obtained by adding the rotation speed commanded to the reference spindle to that commanded to the superimposed spindle. If the rotation speed of the reference spindle or superimposed spindle exceeds the rotation speed at which either the reference spindle or the superimposed spindle is clamped at a maximum , the spindle superimposition clamping signal is set to ON.

(2) Maximum clamp rotation speed (G92 Q command)

The minimum clamp rotation speed specified with the address Q following G92 is valid for the reference spindle, but invalid for the superimposed spindle.
If the rotating spindle is set to the superimposed spindle at the minimum clamp rotation speed, the minimum rotation speed clamp is canceled, and the spindle rotates at the commanded rotation speed. If the spindle superimposition control state is canceled, the minimum clamp rotation speed is enabled.

### Feed per revolution (synchronous feed)

(1) Feed per revolution is set to the feedrate per spindle revolution (mm/rev) of the differential velocity rotation speed for the superimposed spindle. This enables a tap cycle, etc. with floating tap chuck in the spindle superimposition state.

(2) When the feed per revolution is set to the superimposed spindle, the superimposition state must not be canceled during feed per revolution.
If it is canceled, the spindle rotation speed changes from the differential velocity rotation speed to the superimposed-spindle rotation speed; therefore, the feed axis speed varies, and the machining surface may be damaged.

### Spindle synchronization, Tool spindle synchronization I (polygon), and Tool spindle synchronization II (hobbing)

(1) If the Spindle superimposition control is commanded to the Spindle under spindle synchronization I or II, Tool spindle synchronization I (A/B/C), or Tool spindle synchronization II, it causes an operation error (M01 1005).

(2) If the spindle synchronization I or II, tool spindle synchronization I (A/B/C), or tool spindle synchronization II is commanded to the reference spindle or superimposed spindle in the spindle superimposition control state, it causes an operation error (M01 1005).

### High-speed synchronous tapping

When the high-speed synchronous tapping is enabled in the specifications, the normal synchronous tapping is applied during spindle superimposition. The high-speed synchronous tapping depends on the MTB specifications (parameter "#1281 ext17/bit5").

### Tapping return

When differential velocity tapping is canceled by emergency stop or reset, whether tapping return is to be enabled depends on the MTB specifications. Refer to the instruction manual issued by the MTB for details.
If reset or emergency stop is performed during differential velocity tapping, the differential velocity state cannot be maintained, causing the screw section to be cut off. The tap tool can be removed from the workpiece, but the workpiece will become defective.

### Spindle stop signal

If the spindle stop signal is input to the reference spindle in the spindle superimposition state, the spindle runs in the same way as when the spindle stop or rotation speed 0 (r/min) is commanded to the reference spindle.
If the spindle stop signal is input to the superimposed spindle, the spindle runs in the same way as when the spindle stop or rotation speed 0 (r/min) is commanded to the superimposed spindle. (The operation with a signal depends on the MTB specifications.)

### Spindle orientation signal

The spindle orientation is not applicable to the reference or superimposed spindle in the spindle superimposition mode.
If the orientation is commanded, it causes an operation error (M01 1025). Also, if the spindle superimposition control for the reference or superimposed spindle is commanded to the spindle under orientation, it causes an operation error (M01 1025).
Before commanding the orientation, cancel the spindle superimposition mode.

### Switching the spindle gear

The spindle gear switching is not applicable to the reference or superimposed spindle in the spindle superimposition control mode.
Before commanding the spindle superimposition, switch the gear mode.
The spindle superimposition state or each PLC signal of spindle gear shift command 1 or 2 is kept in the state in which the spindle superimposition commanded.

### Zero speed signal

The superimposed-spindle zero speed signal is et on when the motor rotation speed for (rotation speed commanded to the reference spindle) + (rotation speed commanded to the superimposed spindle) falls below the speed specified in the spindle parameter "#13027 SP027".

### Spindle speed reach signal

The superimposed-spindle speed reach signal is output when the speed reaches (rotation speed commanded to the reference spindle) + (rotation speed commanded to the superimposed spindle).

### Spindle forward running signal / spindle reverse running signal

For the superimposed-spindle forward running / reverse running signal, the forward running signal is set on if the motor rotation direction for (rotation speed commanded to the reference spindle) + (rotation speed commanded to the superimposed spindle) is set to CCW, and the reverse running signal is set on if it is set to CW.

## Precautions

(1) The parameter "#13003 SP003" (Position loop gain spindle synchronization) and SHG setting must be the same between the reference and superimposed spindles. These are determined in the MTB specifications.

(2) Be careful of the rotation speed clamp when issuing the command. The rotation speed difference commanded to the reference or superimposed spindle cannot be maintained while the rotation speed remains clamped.

(3) The rotation speed commanded to the superimposed spindle side in the spindle superimposition control state is indicated by the rotation speed commanded only to the superimposed spindle. The feedback rotation speed is indicated by the actual rotation speed of the superimposed spindle.

(4) Before starting machining in the spindle superimposition control state, be sure to check that the spindle rotation speed synchronization completed signal (FSPRV) is output after the spindle superimposition has been commanded. (The signal check method depends on the MTB specifications.)

(5) The parameters "#3005 smax1" to "#3008 smax4" (Maximum rotation speed) can be set up to 6 digits (999999); however, this function is limited to set up to 5 digits (99999). (The parameter settings depends on the MTB specifications.)

# 18.5 Multiple Spindle Synchronization Set Control

## Function and purpose

This function enables users to combine the following spindle control functions and control them simultaneously.

(*1) The same function can be combined.

When a certain pair of spindles has been designated for one spindle control function, a different pair of spindles can be used for another spindle control function.

- Spindle synchronization I
- Tool Spindle Synchronization IA (Spindle-Spindle, Polygon)
- Tool Spindle Synchronization IB (Spindle-Spindle, Polygon)
- Tool Spindle Synchronization II (Hobbing)
- Spindle superimposition control
- Spindle synchronization II [Only for C80 Series]

The same reference spindle can be used when the following spindle control functions are combined.

- Spindle synchronization I
- Tool Spindle Synchronization IA
- Spindle synchronization II [Only for C80 Series]

| | |
|---|---|
| ♦Spindle synchronization I command (S1-S2)<br>♦Tool spindle synchronization IA command (S3-S4)<br> 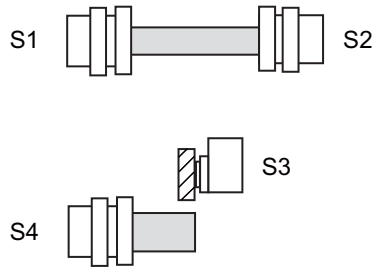 | ♦Spindle synchronization I command (S1-S2)<br>♦Tool spindle synchronization IA command (S1-S5)<br> 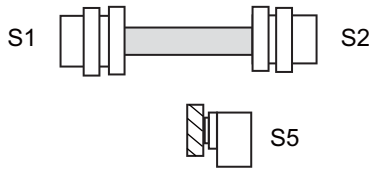 |
| ♦Spindle synchronization I command (S1-S2)<br>♦Tool spindle synchronization II command (S3-C4)<br> 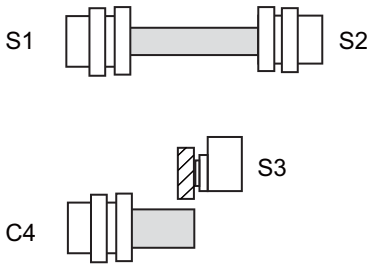 | ♦C axis command of spindle position control (Spindle/C axis control) during spindle synchronization control (S1/C1-S2)<br>♦Tool spindle synchronization II command (S5-C1)<br> 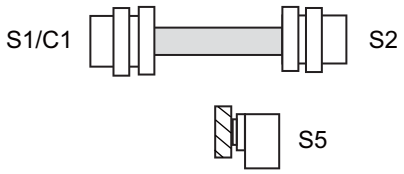 |
| ♦Spindle synchronization I command (S1-S2)<br>♦Spindle superimposition command (S4-S3)<br> 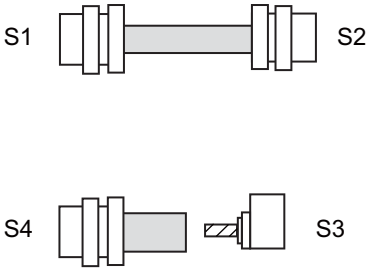 | ♦Tool spindle synchronization IA command (S5-S1)<br>♦Tool spindle synchronization IA command (S3-S4)<br> 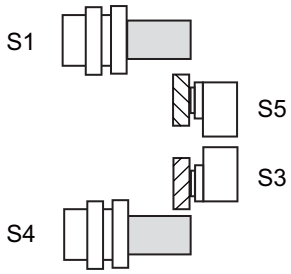 |

| | |
|---|---|
| ♦Tool spindle synchronization II command (S5-C1)<br>♦Tool spindle synchronization II command (S3-C4)<br> 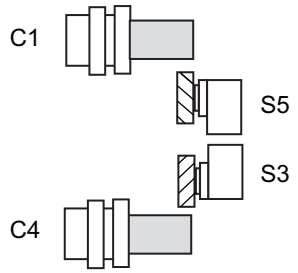 <br> | ♦Spindle superimposition command (S1-S5)<br>♦Spindle superimposition command (S4-S3)<br> 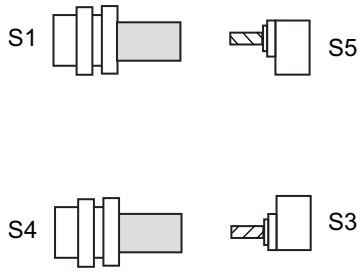 <br> |

### List of available combinations

G114.1: Spindle synchronization I command
G114.2: Tool spindle synchronization IA command
G51.2: Tool spindle synchronization IB command
G114.3: Tool spindle synchronization II command
G164: Spindle superimposition control
G84: Synchronous tap

[Ref] indicates "reference axis" or "reference spindle".
[Sync] indicates "synchronized axis" or "synchronized spindle".

| Spindle synchronization command for the 2nd set | | | Spindle synchronization command for the 1st set | | |
|---|---|---|---|---|---|
| | [Ref] | [Sync] | G114.1<br>S1 [Ref] - S2 [Sync] | G114.2<br>S1 [Ref] - S2 [Sync] | G51.2<br>S1 [Ref] - S2 [Sync] |
| **G114.1** | **S3** | **S4** | ○ | ○ | ○ |
| | **S1** | **S4** | ○ | ○ | x (*1) |
| | **S3** | **S2** | x (*2) | x (*2) | x (*2) |
| | **S2** | **S3** | x (*3) | x (*3) | x (*3) |
| | **S3** | **S1** | x (*3) | x (*3) | x (*3) |
| **G114.2** | **S3** | **S4** | ○ | ○ | ○ |
| | **S1** | **S4** | ○ | ○ | x (*1) |
| | **S3** | **S2** | x (*2) | x (*2) | x (*2) |
| | **S2** | **S3** | x (*3) | x (*3) | x (*3) |
| | **S3** | **S1** | x (*3) | x (*3) | x (*3) |
| **G51.2** | **S3** | **S4** | ○ | ○ | ○ |
| | **S1** | **S4** | ○ | x (*1) | x (*1) |
| | **S3** | **S2** | x (*2) | x (*2) | x (*2) |
| | **S2** | **S3** | x (*3) | x (*3) | x (*3) |
| | **S3** | **S1** | x (*3) | x (*3) | x (*3) |
| **G114.3** | **S3** | **C4** | ○ | ○ | ○ |
| | **S1** | **C4** | x (*1) | x (*1) | x (*1) |
| | **S3** | **C1** | ○ | ○ | ○ |
| **G164** | **S3** | **S4** | ○ | ○ | ○ |
| | **S1** | **S4** | x (*1) | x (*1) | x (*1) |
| | **S3** | **S2** | x (*2) | x (*2) | x (*2) |
| | **S2** | **S3** | x (*3) | x (*3) | x (*3) |
| | **S3** | **S1** | x (*3) | x (*3) | x (*3) |
| **G84** | **S1** | | x (*4) | x (*4) | x (*4) |
| | **S2** | | x (*4) | x (*4) | x (*4) |
| | **S3** | | ○ | ○ | ○ |

| Spindle synchronization command for the 2nd set | | | Spindle synchronization command for the 1st set | | |
|---|---|---|---|---|---|
| | [Ref] | [Sync] | G114.3<br>S1 [Ref] - C1 [Sync] | G164<br>S1 [Ref] - S2 [Sync] | G84<br>S1 |
| G114.1 | S3 | S4 | ○ | ○ | ○ |
| | S1 | S4 | x (*1) | x (*1) | x (*4) |
| | S3 | S2 | ○ | x (*2) | ○ |
| | S2 | S3 | ○ | x (*3) | ○ |
| | S3 | S1 | x (*3) | x (*3) | x (*4) |
| G114.2 | S3 | S4 | ○ | ○ | ○ |
| | S1 | S4 | x (*1) | x (*1) | x (*4) |
| | S3 | S2 | ○ | x (*2) | ○ |
| | S2 | S3 | ○ | x (*3) | × |
| | S3 | S1 | x (*3) | x (*3) | x (*4) |
| G51.2 | S3 | S4 | ○ | ○ | ○ |
| | S1 | S4 | x (*1) | x (*1) | x (*4) |
| | S3 | S2 | ○ | x (*2) | ○ |
| | S2 | S3 | ○ | x (*3) | × |
| | S3 | S1 | x (*3) | x (*3) | x (*4) |
| G114.3 | S3 | C4 | ○ | ○ | ○ |
| | S1 | C4 | x (*1) | x (*1) | x (*1) |
| | S3 | C1 | x (*2) | ○ | ○ |
| G164 | S3 | S4 | ○ | ○ | ○ |
| | S1 | S4 | x (*1) | x (*1) | x (*4) |
| | S3 | S2 | x (*2) | x (*2) | ○ |
| | S2 | S3 | x (*3) | x (*3) | ○ |
| | S3 | S1 | x (*3) | x (*3) | ○ |
| G84 | S1 | | x (*4) | x (*4) | x (*4) |
| | S2 | | ○ | x (*4) | ○ |
| | S3 | | ○ | ○ | ○ |

(*1) The reference spindle of the 1st set overlaps with that of the 2nd set.

(*2) The synchronized spindle of the 1st set overlaps with that of the 2nd set.

(*3) The reference spindle of the 1st set overlaps with the synchronized spindle of the 2nd set. Or the synchronized spindle of the 1st set overlaps with the reference spindle of the 2nd set.

(*4) The reference spindle or synchronous spindle of the 1st or 2nd set overlaps with the synchronized tap spindle.

## Enabling conditions

(1) This function can be applied to a lathe system equipped with two or more spindles.

(2) The validity of this function depends on the MTB specifications (parameter "#1440 multi_sp_syn").
If this function is invalid, multiple spindle synchronization commands cannot be issued. (If two or more spindle synchronization commands are issued, the operation error (M01 1005) occurs, which causes automatic operation to pause.)
Note that guide bushing spindle synchronization is not included in the multiple spindle synchronization sets.

## Command format

For details about the command format to start each function, refer to the relevant function's section.

### Canceling spindle synchronization (G113.1 can be used instead of G113)

(1) Command to cancel all synchronization modes
Cancels all the synchronized sets. The format varies depending on the MTB specifications (parameter "#1242 set14/bit6").

[When "#1242 set14 bit6" = 0]

| | |
|---|---|
| **G113 H0 ;** | Cancels all the active tool spindle synchronization II (hobbing) commands. |

| | |
|---|---|
| **G113 D0 ;** | Cancels all the active Spindle synchronization I, Tool spindle synchronization IA (Spindle-Spindle, Polygon), and spindle superimposition commands. |

**Note**

- If one set of spindle synchronization is active, G113 (without H_/D_) is able to cancel the spindle synchronization control. However, if two or more sets of Spindle synchronization are active, the command causes the operation error (M01 1135) to occur.

[When "#1242 set14 bit6" = 1]

**G113 ;**

**Note**

- If "G113 H0;" or "G113 D0;" is issued, the program error (P35) occurs.

(2) Spindle synchronization I, Tool spindle synchronization IA (Spindle-Spindle, Polygon), or Spindle superimposition control cancel command

**G113 D__ ;**

| Address | Meaning | Command range | Remarks |
|---|---|---|---|
| D | Cancel target synchronized or superimposed spindle<br>Specify the number or name of the spindle that serves as the synchronized spindle in the Spindle synchronization I or Tool spindle synchronization IA, or as the superimposed spindle in the Spindle superimposition control mode. (*1) | Spindle No.: 1 to number of spindles<br>Spindle name: 1 to 9 | ♦If the command range is exceeded, the program error (P35) will occur.<br>♦If you specify a non-existent spindle, the program error (P35) occurs.<br>♦If you specify a spindle that is not under synchronization, the operation error (M01 005) occurs.<br>♦If there is no address D, the synchronization status of all spindle synch sets is cancelled.<br>♦If the address H is issued simultaneously with the address D, the program error (P33) will occur. |

(*1) There are two types of spindle designation methods: Spindle number method and spindle name method. When any name (1 to 9) is set to the spindle name parameter "#3077 Sname" of all the spindles, the spindle name method takes effect. In other cases, the spindle number is used.

(*2) Spindle synchronization I, Tool spindle synchronization IA (Spindle-Spindle, Polygon), or spindle superimposition control can be canceled with the G113D_command regardless of whether the multiple spindle synchronization set control is valid or invalid.

(3) Tool spindle synchronization II (hobbing) cancel command (when the G code system of the program is 2, 3, 4, or 5):

```
G113 H_;
```

| Address | Meaning | Command range | Remarks |
|---|---|---|---|
| H | Reference spindle to be canceled<br>Specify the number or name of the spindle that serves as the reference spindle in the tool spindle synchronization II (hobbing) mode. (*1) | Spindle No.: 1 to number of spindles<br>Spindle name: 1 to 9 | ♦ If the command range is exceeded, the program error (P35) will occur.<br>♦ If you specify a non-existent spindle, the program error (P35) occurs.<br>♦ If you specify a spindle that is not under synchronization, the operation error (M01 1005) occurs.<br>♦ If the address H is not issued, the synchronization status of all the spindle synchronization sets is canceled.<br>♦ If the address D is issued simultaneously with the address H, the program error (P33) will occur. |

(*1) There are two types of spindle designation methods: Spindle number method and spindle name method. When any name (1 to 9) is set to the spindle name parameter "#3077 Sname" of all the spindles, the spindle name method takes effect. In other cases, the spindle number is used.

(*2) Tool spindle synchronization II (hobbing) can be canceled with the G113D_ command regardless of whether the multiple spindle synchronization set control is valid or invalid.

(4) Tool spindle synchronization II (hobbing) cancel command (when the G code system of the program is 6 or 7)
Cancel tool spindle synchronization II (hobbing) of the specified part system.

```
G80.4;
```

(5) Tool spindle synchronization IB (Spindle-Spindle, Polygon) cancel command
Cancel tool spindle synchronization IB (Spindle-Spindle, Polygon) of the specified part system.

```
G50.2;
```

## Operation example

The function combination table in the operation example shows each function as follows.

G114.1: Spindle synchronization I command
G114.2: Tool spindle synchronization IA command
G51.2: Tool spindle synchronization IB command
G114.3: Tool spindle synchronization II command
G164: Spindle superimposition control
G84: Synchronous tap

(1) If there is no overlap among the spindles of each spindle synchronization set or the workpiece spindle of tool spindle synchronization II (hobbing), the multiple synchronization sets can be controlled at the same time.

Example: Combinations when the commanded reference spindle or synchronized spindle is not included in other control sets

| Spindle synchronization command for the 2nd set | Spindle synchronization command for the 1st set | | | | |
|---|---|---|---|---|---|
| | G114.1 (S1-S2) | G114.2 (S1-S2) | G51.2 (S1-S2) | G114.3 (S1-C1) | G164 (S1-S2) |
| G114.1 (S3-S4) | ○ | ○ | ○ | ○ | ○ |
| G114.2 (S3-S4) | ○ | ○ | ○ | ○ | ○ |
| G51.2 (S3-S4) | ○ | ○ | ○ | ○ | ○ |
| G114.3 (S3-C4) | ○ | ○ | ○ | ○ | ○ |
| G164 (S3-S4) | ○ | ○ | ○ | ○ | ○ |

S1, S2, S3, S4: S command name C1, C3: Name of rotary axis

<Program example (1)-1: When Spindle synchronization I [S1-S2] and Tool spindle synchronization IA [S3-S4] are commanded simultaneously>

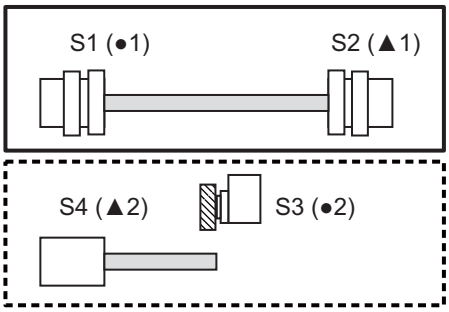


1st set: Spindle synchronization I command [S1(●1) - S2(▲1)]

2nd set: Tool spindle synchronization IA command [S3(●2) - S4(▲2)]

●: Reference axis ▲: Synchronized axis or superimposed axis

The number following each symbol indicates which set is specified. For example, "●1" indicates the reference axis of the 1st set.

| 1st part system | | 2nd part system | |
|---|---|---|---|
| S1=1000 ; | Commands 1000 r/min to the 1st spindle. | : | |
| M13; | Issues forward-run command to S1 | : | |
| S2=1500 ; | Issues 1500r/min command to S2 | | |
| M24 ; | Issues reverse-run command to S2 | | |
| G04X2.; | | | |
| G114.1H1D-2 ;<br>: | 1st set: Spindle synchronization I command<br>Both the 1st and 2nd spindles start synchronization at 1000 r/min. | | |
| : | | S3=1500; | Issues 1500r/min command to S3 |
| | | M33; | Issues forward-run command to S3 |
| | | G04X2.; | |
| | | G114.2H3D-4E4L5;<br>: | 2nd set: Tool spindle synch IA ON<br>Start a synchronization at the rotation speed shown below.<br>3rd spindle: 1500 r/min<br>4th spindle: 1200 r/min |
| G113D2;<br>: | 1st set: Spindle synch control OFF | : | |
| | | G113D4;<br>: | Cancels tool spindle synchronization IA in the 2nd set. |

<Program example (1)-2: When spindle synchronization C axis control [S1/C1-S2] and tool spindle synchronization II [S3-C1] are commanded simultaneously>

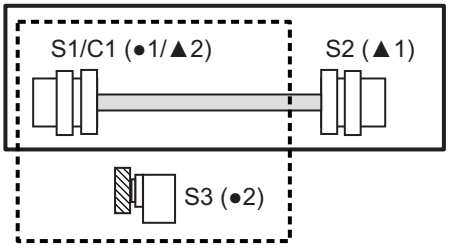


1st set: Spindle synchronization C axis command [S1/C1(●1) - S2(▲1)]

2nd set: Tool spindle synchronization II command [S3(●2) - S1/C1(▲2)]

●: Reference axis ▲: Synchronized axis or superimposed axis

The number following each symbol indicates which set is specified. For example, "●1" indicates the reference axis of the 1st set.

| 1st part system | |
|---|---|
| S1=1000 ; | Commands 1000 r/min to the 1st spindle. |
| M13 ; | Issues forward-run command to S1 |
| S2=1500 ; | Issues 1500r/min command to S2 |
| M24 ; | Issues reverse-run command to S2 |
| G04X2.; | |
| G114.1H1D-2 ; | 1st set: Spindle synchronization I command<br>Both the 1st and 2nd spindles start synchronization at 1000 r/min. |
| : | |
| Mxxx ; | Changes S1 to C axis mode. |
| : | |
| S3=1500 ; | Issues 1500r/min command to S3 |
| M33 ; | Issues forward-run command to S3 |
| G4X2.; | |
| G114.3H3D9; | 2nd set: Tool spindle synchronization II command<br>The 1st, 2nd, and 3rd spindles start synchronization at 1500 r/min. |
| : | |
| : | |
| G113D3; | Cancels the tool spindle synchronization II command in the 2nd set. |
| : | |
| Mxx; | Changes S1 to spindle mode. |
| : | |
| G113; | Cancels the Spindle synchronization I command in the 1st set. |
| : | |

(2) If the reference spindle of one spindle synchronization set overlaps with that of another synchronization set, the operation error (M01 1005) occurs. Note, however, that the reference spindle of Spindle synchronization or Tool spindle synchronization IA (Spindle-Spindle, Polygon) is allowed to be used as the reference spindle of Spindle synchronization or Tool spindle synchronization IA (Spindle-Spindle, Polygon) of another synchronization set.

Example: Combinations when the reference spindle of the 2nd set is controlled as the reference spindle of another set (When S1 is duplicated as the reference spindle)

| Spindle synchronization command for the 2nd set | Spindle synchronization command for the 1st set | | | | |
|---|---|---|---|---|---|
| | G114.1 (S1-S2) | G114.2 (S1-S2) | G51.2 (S1-S2) | G114.3 (S1-C1) | G164 (S1-S2) |
| G114.1 (S1-S3) | ○ | ○ | × | × | × |
| G114.2 (S1-S3) | ○ | ○ | × | × | × |
| G51.2 (S1-S3) | × | × | × | × | × |
| G114.3 (S1-C4) | × | × | × | × | × |
| G164 (S1-S3) | × | × | × | × | × |

S1, S2, S3, S4: S command name C1, C3: Name of rotary axis

<Program example (2)-1: When Spindle synchronization I [S1-S2] and tool spindle synchronization IA [S1-S3] are commanded simultaneously>

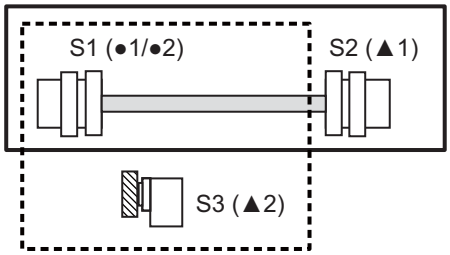


1st set: Spindle synchronization I command [S1(●1) - S2(▲1)]

2nd set: Tool spindle synchronization IA command [S1(●2) - S3(▲2)]

●: Reference axis ▲: Synchronized axis or superimposed axis

The number following each symbol indicates which set is specified. For example, "●1" indicates the reference axis of the 1st set.

| 1st part system | | 2nd part system | |
|---|---|---|---|
| S1=1000 ; | Commands 1000 r/min to the 1st spindle. | : | |
| M13; | Issues forward-run command to S1 | | |
| S2=1500 ; | Issues 1500r/min command to S2 | | |
| M24 ; | Issues reverse-run command to S2 | | |
| G04X2.; | | | |
| G114.1H1D-2 ; | 1st set: Spindle synchronization I command | | |
| : | Both the 1st and 2nd spindles start synchronization at 1000 r/min. | | |
| : | | S3=1500 | Issues 1500r/min command to S3 |
| | | M33 ; | Issues forward-run command to S3 |
| | | G04X2.; | |
| | | G114.2H3D-4E4L5; | 2nd set: Tool spindle synch IA ON |
| | | : | Start a synchronization at the rotation speed shown below.<br>1st spindle: 1000 r/min<br>3rd spindle: 1250 r/min |
| G113D2; | Cancels the Spindle synchronization I command in the 1st set. | : | |
| : | | | |
| | | G113D3; | 2nd set: Tool spindle synch IA OFF |
| | | : | |

<Program example (2)-2: When tool spindle synchronization IA [S3-S2] and spindle superimposition control command [S2-S4] are commanded simultaneously>

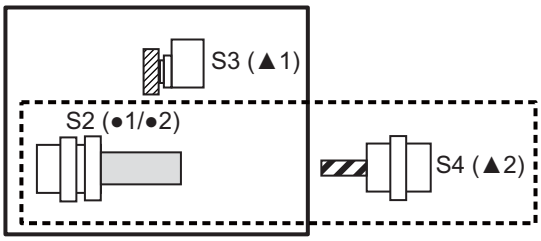


1st set: Tool spindle synchronization IA command [S2(●1) - S3(▲1)]

2nd set: Spindle superimposition control command [S2(●2) - S4(▲2)]

●: Reference axis ▲: Synchronized axis or superimposed axis

The number following each symbol indicates which set is specified. For example, "●1" indicates the reference axis of the 1st set.

| 1st part system | | 2nd part system | |
|---|---|---|---|
| S2=1000 ; | Commands 1000 r/min to the 2nd spindle. | : | |
| M23; | Commands forward running to the 2nd spindle. | | |
| G04X2.; | | | |
| G114.2H2D-3 ; | 1st set: Tool spindle synchronization IA command | | |
| : | Both the 2nd and 3rd spindles start synchronization at 1000 r/min. | | |
| | | S4=1000 ; | Commands 1000 r/min to the 4th spindle. |
| | | M44 ; | Commands reverse running to the 4th spindle. |
| | | G04X2.; | |
| | | G164H2D-4;<br>: | 2nd set: Spindle superimposition control command<br>The operation error (M01 1005) will occur (automatic operation pause). |

(3) If the synchronized spindles (or workpiece spindle for Tool spindle synchronization II (hobbing)) of two spindle synchronization sets overlap with each other, the operation error (M01 1005) occurs.

<Program example (3)-1: When Spindle synchronization I [S1-S2] and tool spindle synchronization IA [S3-S2] are commanded simultaneously>

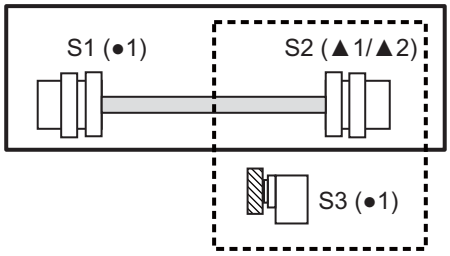


1st set: Spindle synchronization I command [S1(●1) - S2(▲1)]

2nd set: Tool spindle synchronization IA command [S3(●2) - S2(▲2)]

●: Reference axis ▲: Synchronized axis or superimposed axis

The number following each symbol indicates which set is specified. For example, "●1" indicates the reference axis of the 1st set.

| 1st part system | | 2nd part system | |
|---|---|---|---|
| S1=1000 ; | Commands 1000 r/min to the 1st spindle. | : | |
| M13; | Issues forward-run command to S1 | | |
| S2=1500 ; | Issues 1500r/min command to S2 | | |
| M24 ; | Issues reverse-run command to S2 | | |
| G04X2.; | | | |
| G114.1H1D-2 ;<br>: | 1st set: Spindle synchronization I command<br>Both the 1st and 2nd spindles start synchronization at 1000 r/min. | : | |
| : | | : | |
| | | S3=1500 | Issues 1500r/min command to S3 |
| | | M33 ; | Issues forward-run command to S3 |
| | | G04X2.; | |
| | | G114.2H3D-4E4L5;<br>: | 2nd set: Tool spindle synchronization IA command<br>The operation error (M01 1005) will occur (automatic operation pause). |

(4) If the reference spindle of one spindle synchronization set overlaps with the synchronized spindle of another synchronization set, the operation error (M01 1005) occurs.

<Program example (4)-1: When Spindle synchronization I [S1-S2] and Tool spindle synchronization IA [S2-S3] are commanded simultaneously>

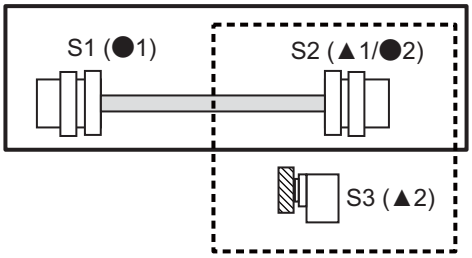


1st set: Spindle synchronization I command [S1(●1) - S2(▲1)]

2nd set: Tool spindle synchronization IA command [S2(●2) - S3(▲2)]

●: Reference axis ▲: Synchronized axis or superimposed axis

The number following each symbol indicates which set is specified. For example, "●1" indicates the reference axis of the 1st set.

| 1st part system | | 2nd part system | |
|---|---|---|---|
| S1=1000 ; | Commands 1000 r/min to the 1st spindle. | : | |
| M13; | Issues forward-run command to S1 | | |
| S2=1500 ; | Issues 1500r/min command to S2 | | |
| M24 | Issues reverse-run command to S2 | | |
| G04X2.; | | | |
| G114.1H1D-2 ;<br>: | 1st set: Spindle synchronization I command<br>Both the 1st and 2nd spindles start synchronization at 1000 r/min. | | |
| | | : | |
| | | S3=1500 | Issues 1500r/min command to S3 |
| | | M33 ; | Issues forward-run command to S3 |
| | | G04X2.; | |
| | | G114.2H3D-4E4L5;<br>: | 2nd set: Tool spindle synchronization IA command<br>The operation error (M01 1005) will occur (automatic operation pause). |

## Relationship with other functions

### Spindle synchronization II

[M800/M80]

Spindle synchronization II does not support the multiple spindle synchronization set control. Thus, output the PLC output signal of the 1st spindle regardless of whether the multiple spindle synchronization set control is valid or invalid.

[C80]

(1) Multiple spindle synchronization set control can be used with spindle synchronization II. However, Spindle synchronous control I and II cannot be used simultaneously.

(2) For Spindle synchronous control II, if the parameter "#1440 multi_sp_syn" is set to "0", the synchronization is performed by using the setting value of the 1st spindle of the PLC interface.

### Tool spindle synchronization IC (Spindle-NC axis, Polygon)

(1) The reference spindle of tool spindle synchronization IC cannot be used as the reference or synchronized (or superimposed) spindle of Spindle synchronization I, Tool spindle synchronization IA, IB (Spindle-Spindle, Polygon), Tool spindle synchronization II (hobbing) or Spindle superimposition control.
The operation error (M01 1005) will occur, which causes automatic operation to pause.

(2) The rotary tool axis of tool spindle synchronization IC cannot be used as the workpiece axis of tool spindle synchronization II (hobbing).
The operation error (M01 1005) will occur, which causes automatic operation to pause.

### Synchronous tapping cycle

In the following cases, the operation error will occur, which causes automatic operation to pause.

(1) A synchronous tap spindle cannot be commanded as the reference spindle of Spindle synchronization I, Tool spindle synchronization IA, IB (Spindle-Spindle, Polygon), Tool spindle synchronization II (hobbing) or Spindle superimposition control. (Operation error (M01 1007))

(2) A synchronous tap spindle cannot be commanded as the synchronized spindle of Spindle synchronization I, Tool spindle synchronization IA, IB (Spindle-Spindle, Polygon) or Spindle superimposition control. (Operation error (M01 1007))

(3) You cannot command a synchronous tapping that uses the reference spindle of Spindle synchronization I, Tool spindle synchronization IA, IB (Spindle-Spindle, Polygon) or Tool spindle synchronization II (hobbing). (Operation error (M01 1139))

(4) You cannot command a synchronous tapping that uses the reference spindle of Spindle superimposition control. (Operation error (M01 1131))

(5) You cannot command a synchronous tap that uses the synchronized spindle of Spindle synchronization I or Tool spindle synchronization IA, IB (Spindle-Spindle, Polygon). (Operation error (M01 1139))

## Precautions

(1) If any of the following commands are issued to a spindle for which cancel operation is being processed by the G113 command or the spindle synchronization/superimposition cancel signal (SPSYC), the operation error (M01 1005) occurs.
- Spindle synchronization
- Tool spindle synchronization IA (Spindle-Spindle, Polygon)
- Tool spindle synchronization II (hobbing)
- Spindle superimposition control

Note that the commanded spindle synchronization operation starts after the cancel process is completed.

(2) If the cancel command (G113 D_ , G113 H_) are issued to a spindle that is not under synchronous control, the operation error (M01 1005) will occur.

(3) If the spindle synchronization/superimposition cancel signal (SPSYC) turns ON for a spindle that is not under synchronization control, the control ignores the cancel signal.

(4) Do not issue two or more tool spindle synchronization II (hobbing) commands to one part system. Doing so causes the program error (P33) when the tool spindle synchronization II command in the 2nd set is issued, which causes automatic operation to pause.

(5) Do not issue two or more tool spindle synchronization IB (Spindle-Spindle, Polygon) commands to one part system. Doing so causes the program error (P33) when the tool spindle synchronization IB command in the 2nd set is issued, which causes automatic operation to pause.

(6) Do not put an axis address that causes any travel in the same block as the spindle synchronization cancel command (G113/G80.4/G50.2). Doing so causes the program error (P33) when the Spindle synchronization cancel command is issued, which causes automatic operation to pause.

# 19

# Advanced Machining Control

# 19.1 Inclined Surface Machining; G68.2/G69.1

## Function and purpose

Inclined surface machining function enables defining a new coordinate system (feature coordinate system) which is obtained by rotating and parallel translating the zero point of the present coordinate system (X, Y, Z) (a coordinate system that existed before the inclined surface machining command was issued). With this function, you can define an arbitrary plane in a space and issue normal program commands to this plane in machining.

It's possible to automatically control the tool axis to be in the + Z direction of the newly defined feature coordinate system. The feature coordinate system is redefined in accordance with the tool axis direction, thus there is no need to mind the feature coordinate system's direction and tool axis' rotation direction in making machining programs.

If the inclined surface machining is commanded while this function is not defined in the specifications, it causes a program error (P950).

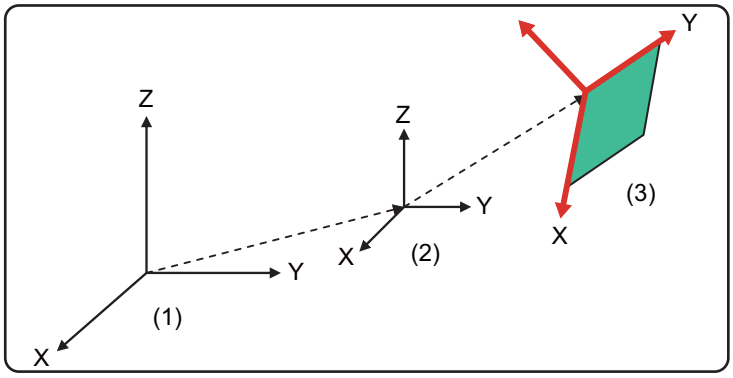


(1) Machine coordinate system
(2) Workpiece coordinate system
(3) Feature coordinate system

When a single linear axis is commanded in the feature coordinate system while the inclined surface machining command is being executed, up to three linear axes may run in the machine coordinate system. Therefore, if the linear axis and two rotary axes are commanded to the same block in a model for which the number of simultaneous contouring control axes is 4 or less, a program error (P10) occurs.

(Example) When the following machining program is executed with machine configuration X-Y-Z-C-B

| | |
|---|---|
| : | |
| G68.2 X10. Y20. I0. J-45. K0.; | |
| : | |
| X20. C10 B20; | Program error (P10) |
| : | |
| G69.1; | |

A new feature coordinate system can be defined in the following method.

| G code | Command method |
|---|---|
| G68.2 P1 | Define using roll-pitch-yaw angles |
| G69.1 | Inclined surface machining cancel |

- G68.2 belongs to G code group 16 modal.
- If address P is omitted when G68.2 is commanded, a program error (P954) occurs.
- If address P is not set to "1" when G68.2 is commanded, a program error (P954) occurs.
- If address P of the G68.2 command includes a decimal point, it is rounded to an integer.
- G68.2 must be commanded alone in a block, which also applies to G69.1. When it is commanded in the same block with other G codes or travel commands, etc., a program error (P954) occurs.
- The cancel command cannot be issued during circular interpolation or fixed cycle mode. If commanded, a program error (P952) occurs.

### Note

(1) Set the short-cut valid or linear-type rotary axis to the rotary axis type (parameter "#8213") of two rotary axes.

### Axis configuration of applicable machines

This function can be used on the machine whose rotary axis is installed with ISO polarity and the machine whose axis is installed with non-ISO polarity. However, the orthogonal axis needs to be installed with ISO polarity. Refer to "Operation when the rotary axis is set with non-ISO polarity" described later for details.

| | |
|---|---|
| Description | Machine equipped with the tool-side rotary axis (B axis), workpiece-side rotary axis (C axis), and 3 axes (X, Y, and Z axes) of the orthogonal coordinate system (combined type machine equipped with a single rotary axis in each of the tool side and workpiece side) |
| Example of machines | 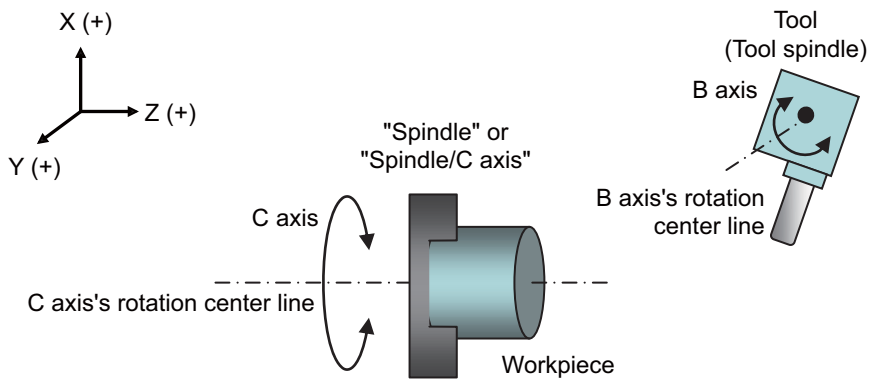 |

<Note>

- This function cannot be applied to the machine in which the rotary axes' rotation center line is not parallel to any of the orthogonal coordinate axes.
- This function cannot be applied to the machine in which three linear axes do not form a right-handed orthogonal coordinate system.
- This function cannot be applied to "tool tilt type" that provides two rotary axes in the tool side and "table tilt type" that provides two rotary axes in the workpiece side.

### Operation when the rotary axis is set with non-ISO polarity

For combined type 5-axis machine, the following functions can be used in the machine whose rotary axis is installed with both ISO polarity or non-ISO polarity.

(5-axis machine other than combined type supports only the rotary axis installed with ISO polarity.)

- Inclined surface machining command (G68.2)
- 3-dimensional manual feed

[Definition of ISO polarity]

"ISO polarity" means that the movement direction and rotation direction of the axis follows the right-hand orthogonal coordinate system (the coordinate system which is defined in ISO standard).

"Non-ISO polarity" means that the movement direction and rotation direction of the axis follows the left-hand orthogonal coordinate system.

To use the rotary axis installed with reverse ISO polarity, set the following parameters.

(1) Set the parameter "#1450 5axis_Spec/bit3" to "1".

(2) Set the parameter, which corresponds to non-ISO polarity axis, between "#7923 DIR_T1", "#7933 DIR_T2", "#7943 DIR_W1", and "#7953 DIR_W2" to "1".

When all the rotary axes are installed with ISO polarity, set the parameter "#1450 5axis_Spec/bit3" to "0".

#### Note

(1) There are following restrictions to use the rotary axis installed with non-ISO polarity.

- When the inclined surface machining command (G68.2) is issued in a machine other than combined type, the program error (P934) occurs.
- When the 3-dimensional manual feed is commanded on a machine other than combined type, the operation alarm (M01 0186) occurs.

## 19.1.1 How to Define Feature Coordinate System Using Roll-Pitch-Yaw Angles

### Command format

**Inclined surface machining mode ON (define using roll-pitch-yaw angles)**

**G68.2 P1 Q__ X(U)__ Y(V)__ Z(W)__ I__ J__ K__** ;

| | |
|---|---|
| X(U), Y(V), Z(W) | Feature coordinate system's zero point<br>Command by the absolute positions with respect to the coordinate system before issuing the inclined surface machining command. |
| Q | Rotation order (q: Setting value for address "Q")<br>q First Second Third<br>123 X Y Z<br>132 X Z Y<br>213 Y X Z<br>231 Y Z X<br>312 Z X Y<br>321 Z Y X<br>If address Q is omitted, "q" will be handled as "123". |
| I | Rotation angle about the X axis (roll angle) (the setting range is from -360.0° to 360.0°) |
| J | Rotation angle about the Y axis (pitch angle) (the setting range is from -360.0° to 360.0°) |
| K | Rotation angle about the Z axis (yaw angle) (the setting range is from -360.0° to 360.0°) |

### Note

(1) If address X(U), Y(V), or Z(W) is omitted, the address will be handled as zero.
When all of addresses X(U), Y(V), and Z(W) are set to "0", the feature coordinate system's zero point will be the same as that of the coordinate system before the inclined surface machining command is issued.

(2) If the address I, J or K is omitted, the address will be regarded as zero.
When all of addresses I, J, and K are set to "0", the axis direction of the feature coordinate system is the same as that of the workpiece coordinate system.

(3) If address I, J or K exceeds the setting range, a program error (P35) occurs.

(4) If any address not described in the format above is designated, a program error (P954) occurs.

(5) A program error (P954) will occur if "q" is a value other than those listed above.
If address Q is omitted, "q" will be handled as "123".

## Detailed description

### Feature coordinate system setting

(Example) The feature coordinate system is established by the machining program as shown below.

G68.2 P1 Q123 Xx Yy Zz Ia Jb Kc;

(When q=123 [rotations in the order of WX, WY and WZ])

(1) Command the zero point of the feature coordinate system using x(u), y(v), and z(w) (coordinate positions that are designated in the coordinate system before inclined surface machining).
The zero point shifts by the (x,y,z) amount as shown in item (1) below.

(2) Rotate the shifted coordinate system by angle "a" about the X axis (WX axis) of the coordinate system before issuing the inclined surface machining command. (Roll angle)

(3) Rotate the coordinate system, which was defined after rotation, by angle "b" about the Y axis (WY axis) of the coordinate system before issuing the inclined surface machining command. (Pitch angle)

(4) Rotate the coordinate system, which was defined after rotation, by angle "c" about the Z axis (WZ axis) of the coordinate system before issuing the inclined surface machining command. (Yaw angle)

(5) The coordinate system created in the above steps is the feature coordinate system (FX, FY, and FZ).

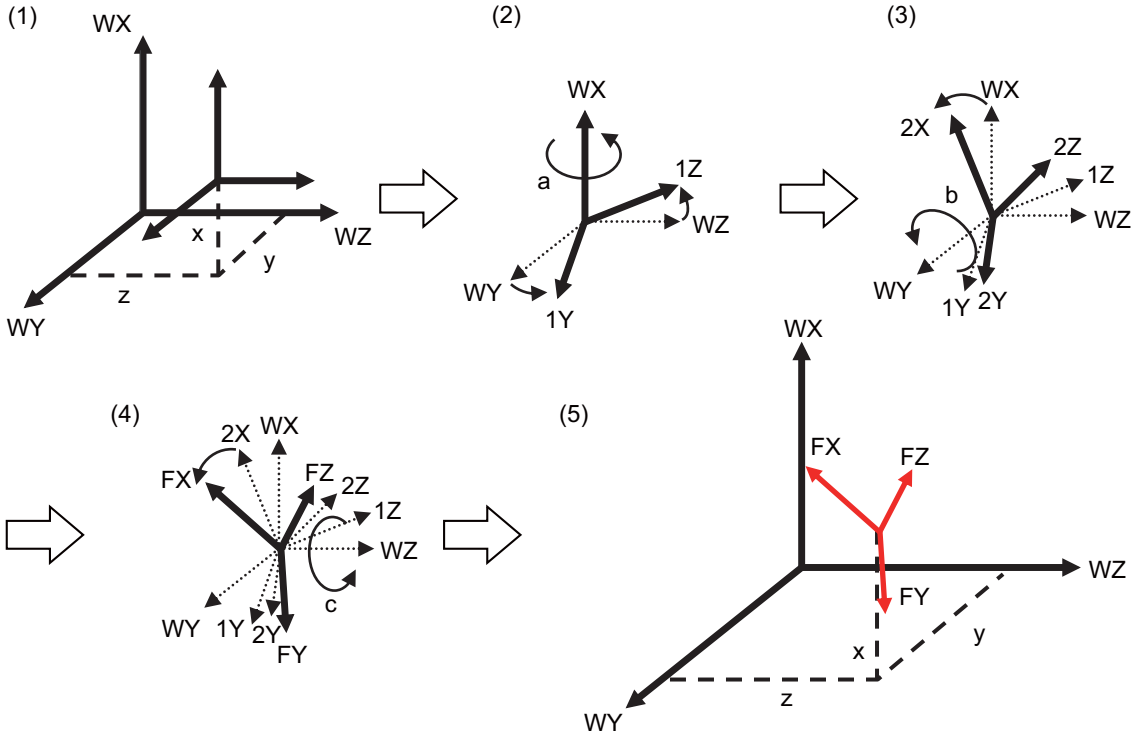

## 19.1.2 Details of Inclined Surface Machining Operation

### Detailed description

#### Operation during inclined surface machining mode

When inclined surface machining is commanded, the above-mentioned feature coordinate system is defined. At this time, the machine sets only the coordinate system without performing operations. Also, the travel commands during inclined surface machining mode are handled with respect to the feature coordinate system.

#### Cancel inclined surface machining mode

The command G69.1 cancels the inclined surface machining. The feature coordinate system setting is canceled, and the coordinate system changes back to the workpiece coordinate system with the inclined surface machining commanded (the machine does not move).

#### Resetting during inclined surface machining mode

Whether the inclined surface machining is retained or canceled when reset is commanded during inclined surface machining mode depends on the MTB specifications (parameters "#1151 rstint" and "#1210 RstGmd/bitF").

| #1151 (Reset initial) | #1210 bitF (Modal G code reset setting) | Reset 1 | Reset 2 | Reset & rewind |
|---|---|---|---|---|
| 0 | 0 | Retains all modals. | Cancel | Cancel |
| | 1 | Retains all modals. | Retains only the inclined surface. | Retains only the inclined surface. |
| 1 | 0 | Cancel | Cancel | Cancel |
| | 1 | Retains only the inclined surface. | Retains only the inclined surface. | Retains only the inclined surface. |

#### Emergency stop or power OFF during inclined surface machining mode

Whether inclined surface machining is retained or canceled when emergency stop or power OFF occurs during inclined surface machining mode depends on the MTB specifications (parameter "#1247 set19/bit2").

| #1247 set19/bit2 (Retains the inclined surface machining mode.) | Emergency stop, power OFF |
|---|---|
| 0 | Cancels the inclined surface machining mode. |
| 1 | Retains the inclined surface machining mode. |

#### Inclined surface coordinate position counter

When "23" is set to the parameters #8901 to #8906, the inclined surface coordinate position counter can be displayed. The position in the configured feature coordinate system is displayed during inclined surface machining mode, and the position in the workpiece coordinate system is displayed during inclined surface machining mode cancel.
The inclined surface coordinate position counter indicates the position on the program command including tool length offset.
The inclined surface coordinate counter can be displayed on the tool tip display window by selecting the "Incline co posn" for "Counter select1" to "Counter select3".
The position on the program command, excluding the tool length compensation/tool radius compensation, can be displayed by setting the inclined surface coordinate display switching. This setting depends on the MTB specifications (parameter "#1287 ext23/bit1, bit2").

## 19.1.3 Rotary Axis Reference Position Selection

### Detailed description

When inclined surface machining is commanded, the basic position for establishing the feature coordinate system's zero point can be set with the parameter ("#7915 SLCT_SLOPE_CRD_MOD" (Rotary axis basic position in inclined surface machining)). There are two types of basic position selection. One is to set the feature coordinate system in view from the workpiece coordinate system independently of the rotary axis' position when inclined surface machining is commanded (Start position basis), and the other is to set the feature coordinate system in view from a workpiece coordinate system which is determined regardless of the rotary axis position when inclined surface machining is commanded (Zero degree position basis).
When the tool-side rotary axis is based on either the start position basis or the zero degree position basis, the feature coordinate system setting is configured regardless of the angle of the tool-side rotary axis.
The figure below shows the feature coordinate system (Fx, Fy, Fz) and workpiece coordinate system (Wx, Wy, Wz).

| | **Rotary axis basic position in inclined surface machining** | |
|---|---|---|
| | **Start position basis (#7915=1)** | **Zero degree position basis (#7915=0)** |
| When indexing the C axis at 0 degree<br> 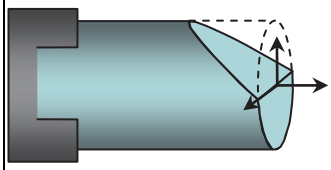 | :<br>G90 G54 C0.;<br>G68.2 P1 Xx Yy Zz Jj;<br>:<br> 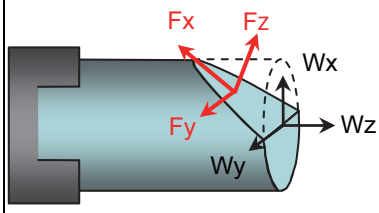 <br><br>Feature coordinate system is defined at a position in view from a workpiece coordinate system. | :<br>G90 G54 C0.;<br>G68.2 P1 Xx Yy Zz Jj;<br>:<br> 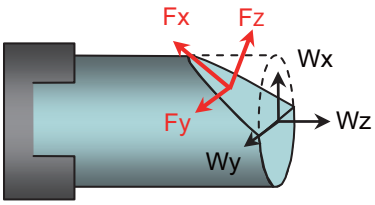 <br><br>Feature coordinate system is defined at a position in view from a coordinate system to suit the rotary axis position. |
| When indexing the C axis at 180 degree<br> 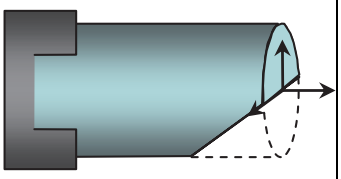 | :<br>G90 G54 C180.;<br>G68.2 P1 Xx Yy Zz Jj;<br>:<br> 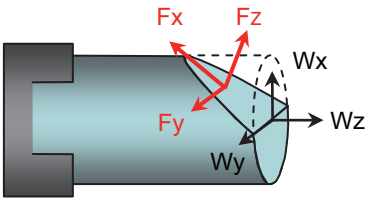 <br><br>Feature coordinate system is defined at a position in view from a workpiece coordinate system. | :<br>G90 G54 C180.;<br>G68.2 P1 Xx Yy Zz Jj;<br>:<br> 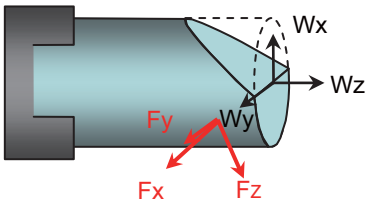 <br><br>Feature coordinate system is defined at a position in view from a coordinate system to suit the rotary axis position.<br>(Feature coordinate system is defined for the machining surface with the C axis set to "0" degree.) |

## 19.1.4 Relationship between Inclined Surface Machining and Other Functions

### Relationship with other functions

**Commands available in inclined surface machining mode**

If commanded in any other mode, a program error (P951) will occur.

| G code (G code list: 3) | Function |
|---|---|
| G00, G01 | Positioning, Linear Interpolation |
| G02, G03 | Circular interpolation, Helical interpolation |
| G04 | Dwell |
| G09 | Exact stop |
| G05 P0, P1, P2, P10000 | High-speed machining mode, High-speed high-accuracy control II |
| G05.1 Q0, Q1 | High-speed high-accuracy control I |
| G10, G11 | Data input by program, Compensation data input by program |
| G08 P1 | High-accuracy control |
| G17, G18, G19 | Plane selection |
| G28 | Automatic reference position return |
| G29 | Start position return |
| G30 | 2nd to 4th reference position return |
| G30.1 | Tool exchange position return 1 |
| G30.2 - G30.5 | Tool exchange position return 2 to 5 |
| G31 | Skip/Speed change skip (*1) |
| G31.1 - G31.3 | Multi-step skip (*1) |
| G40, G41, G42 | Tool nose radius compensation, Tool radius compensation (tool nose point 0 is used) |
| G43.1, G44.1, G47.1 | 1st spindle control mode, 2nd spindle control mode, multiple-spindle simultaneous control mode |
| G53 | Machine coordinate system selection |
| G61 | Exact stop mode |
| G61.1 | High-accuracy mode |
| G62 | Automatic corner override |
| G64 | Cutting mode |
| G65 | Macro simple call |
| G66, G66.1, G67 | Macro modal call |
| G69.1 | Inclined surface machining cancel |
| G80, G81, G82, G83<br>G83.1, G85, G87, G89, | Fixed cycle for drilling / Fixed cycle for drilling (MITSUBISHI CNC special format)<br>(*) Excluding the tap cycle |
| G84, G88, G84.1<br>G84.2, G88.1 | Tapping cycle (X/Z) / Reverse tapping cycle (X/Z) / Synchronous tapping cycle |
| G83.2 | Deep hole drilling cycle 2 |
| G90, G91 | Absolute command, Increment command |
| G94 | Feed per minute |
| G95 | Feed per revolution |
| G98, G99 | Hole drilling cycle I point return, R point return |
| G125 | Control axis synchronization between part systems (*2) |
| G127 | Prohibits the reverse run in all part systems |
| G162, G163 | Spindle speed fluctuation detection |
| G175 | Simple tool center point control cancel |
| G187 | Thread milling cycle |
| G186 | Interference check III |

| G code (G code list: 3) | Function |
|---|---|
| M98, M99 | Subprogram call |
| F | Feedrate command |
| M, S, B | M, S, or B command |
| T | Tool No., compensation amount command |
| Macro instruction | Local variable, Common variable, Arithmetic commands (such as four basic arithmetic rule, trigonometric functions, square root), Control commands (IF-GOTO- and WHILE-DO-) |

(*1) Only the three orthogonal axes designated by the rotary axis configuration parameter can be commanded. If two rotary axes are commanded, a program error (P951) will occur.

(*2) This command is available when any axis in the part system of the inclined surface machining is designated as a reference axis. If any axis in the part system of the inclined surface machining are designated as a synchronized axis, the operation error (M01 1037) occurs.

### Modes where inclined surface machining (including cancel command) is available

If inclined surface machining (G68.2) is commanded in a mode other than those listed below, a program error (P952) occurs.

| G code (G code list: 3) | Function |
|---|---|
| G00, G01 | Positioning, Linear Interpolation |
| G05 P0, P1, P2, P10000 | High-speed machining mode, High-speed high-accuracy control II |
| G05.1 Q0, Q1 | High-speed high-accuracy control I |
| G10.9 | Diameter/Radius designation switch |
| G13.1 | Polar coordinate interpolation cancel (*) |
| G13.1 | Milling interpolation cancel |
| G14 | Balance cut OFF |
| G17, G18, G19 | Plane selection |
| G20, G21 | Inch/Metric command |
| G23 | Barrier check cancel |
| G40 | Tool nose radius compensation cancel, Tool radius compensation cancel |
| G43.1, G44.1, G47.1 | 1st spindle control mode, 2nd spindle control mode, multiple-spindle simultaneous control mode |
| G52 | Local coordinate system setting |
| G54 - G59, G54.1 | Workpiece coordinate system selection 1 to 6, Extended workpiece coordinate selection |
| G61 | Exact stop mode |
| G61.1 | High-accuracy mode |
| G64 | Cutting mode |
| G67 | Macro modal call cancel |
| G69 | Mirror image for facing tool posts cancel |
| G69.1 | Coordinate rotation by program cancel |
| | Inclined surface machining cancel |
| | Simple inclined surface control cancel |
| G80 | Fixed cycle cancel |
| G90, G91 | Absolute command, Increment command |
| G97 | Constant surface speed control OFF |
| G94 | Feed per minute |
| G95 | Feed per revolution |
| G98, G99 | Hole drilling cycle I point return, R point return |
| G110 | Mixed control (Cross axis control) |
| G111 | Axis name switch cancel (*1) |
| G113, G114.1, G114.2, G164 | Spindle synchronization cancel, Spindle superimposition command cancel (*2) |

| G code (G code list: 3) | Function |
|---|---|
| G115, G116 | Start point designation synchronization (*2) |
| G125 | Control axis synchronization between part systems (*3) |
| G162, G163 | Spindle speed fluctuation detection |
| G175 | Simple tool center point control cancel |

(*) Only applies to G code lists 6 and 7.

(*1) This command is available only in the cancel mode. If this command is issued during axis name switching, the program error (P951) occurs.

(*2) Do not issue this command during inclined surface machining.

(*3) This command is available only when there is no synchronized axis in the part system of the inclined surface machining. If there is a synchronized axis in the part system of the inclined surface machining, the program error (P952) occurs.

## Tool length offset

(1) Tool length compensation amount setting at inclined surface machining

The tool length offset in the inclined surface machining command is performed by the T command in the same way as the normal (in the inclined surface machining cancel modal) tool length offset. Executing the T command allows the program to perform tool length offset in the feature coordinate system's axis direction.
To configure the tool length data setting of the tool used for the inclined surface machining command, obtain the length of the rotation center position in the tool side from the tool center point while the tool axis direction (from the tool tip to the tool bottom) matches the positive direction of the Z axis in the machine coordinate system.
The offset setting methods are different between when the rotation center offset (rotary axis configuration parameters "#7934 COFST2H" to "#7936 COFST1T") is used together or not.

(a) When using rotation center offset together

Specify the vector from the tool tip to the tool mount position in tool offset, and the vector from the tool mount position to the rotation center position in rotation center offset ("#7934 COFST2H" to "#7936 COFST1T").

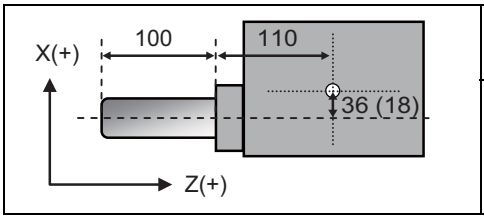


| | |
|---|---|
| Tool length data | X:0<br>Z:100 |
| Rotation center offset<br>(Radius value setting) | X:18<br>Z:110 |

(b) When not using rotation center offset together

Specify the length from the tool tip to the rotation center position in tool offset.

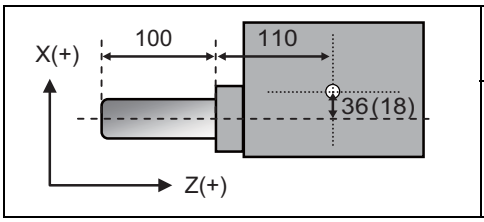


| | |
|---|---|
| Tool length data | X:36(18)<br>Z:210 |
| Rotation center offset<br>(Radius value setting) | X:0<br>Z:0 |

(2) Inclined surface machining command with tool length offset enabled

If the inclined surface machining command (G68.2) is issued while tool length offset is enabled, the actual tool direction does not match the tool length offset direction. Direct the tool axis to the Z axis direction of the feature coordinate system before issuing the inclined surface machining command. Otherwise, direct the tool axis to the feature coordinate system after issuing the inclined surface machining command.

| | |
|---|---|
| 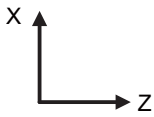 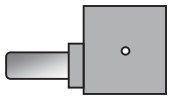 | Before G68.2 is commanded, the actual tool direction matches the tool length offset direction. |
| 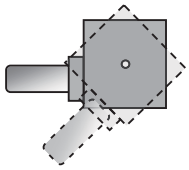 | If the feature coordinate system is designated with the G68.2 command, the tool length is offset in the feature coordinate system direction, which the offset direction does not match the actual tool direction. |
| 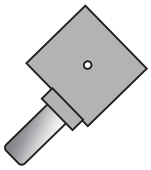 | By turning the tool-side rotary axis, the tool is directed to the feature coordinate system direction, and so the actual tool direction coincides with the tool length offset direction. |

### Tool radius compensation

While the inclined surface machining command (G68.2) is active, the tool radius can be compensated by commanding the tool radius compensation (G41/G42/G40). To compensate the tool radius while the inclined surface machining command (G68.2) is active, set the tool radius compensation amount to the tool nose radius and "0" to the tool nose point P. If the tool nose point P is set to a value other than "0", the tool radius is not compensated to the correct position.

The tool radius can be compensated to the axis direction of the feature coordinate system by commanding the tool radius compensation (G41/G42) after issuing the inclined surface machining command (G68.2).

When an attempt is made to compensate the tool radius while the inclined surface machining command (G68.2) is active, issue the tool radius compensation command (G41/G42) after the inclined surface machining command (G.68.2), then command the inclined surface machining command cancel (G69.1) after the tool radius compensation cancel command (G40).

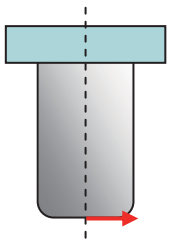

Tool nose radius (indicated by the arrow.)

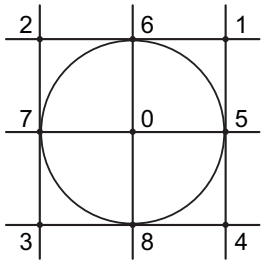


Tool tip point P

```
:
N1 T101;
N2 G00 B45.;
N3 G68.2 P1 J45.;
N4 G01 X0. Z-2. F1000;
N5 G41 G01 X20.;
N6 G01 Y20.;
N7 G02 X0. R10.;
N8 G01 Y0.;
N9 G40;
N10 G01 Z0.;
N11 G69.1;
:
```

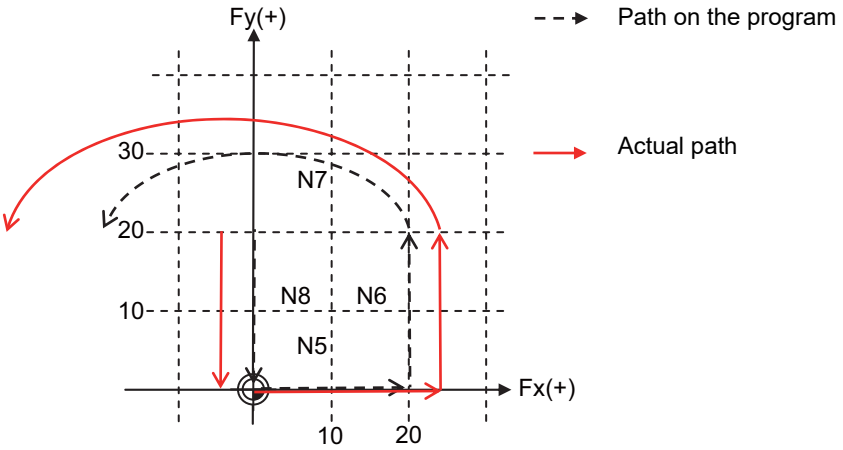

### Tool nose radius compensation

The tool nose radius compensation (G40/41/42) command must be nested between the inclined surface machining commands. In other words, the tool nose radius compensation must be commanded between G68.2 (inclined surface machining command) and G69.1 (inclined surface machining cancel command).

After the tool nose radius compensation cancel (G40) has been commanded alone in a block, if G68.2/G69.1 is commanded while no travel command has been issued, a program error (P952) occurs. Issue the travel command after G40, then command G68.2/G69.1.

| | | |
|---|---|---|
| (Under inclined surface machining) | G68.2 X_Y_Z_I_J_K;<br>: | (Inclined surface machining command) |
| | G41;<br>: | (Nose radius compensation)<br><br>(Under nose radius compensation) |
| | G40;<br>: | (Nose radius compensation cancel) |
| | G69.1; | (Inclined surface machining cancel) |

### 3-dimensional manual feed (Feature coordinate system)

Same as for simple inclined surface machining.
Refer to "3-dimensional manual feed" in "19.2 Simple Inclined Surface Machining" for details.

### Manual arbitrary reverse run

The program path commanded by the manual arbitrary reverse run can be set to the forward run or reverse run during inclined surface machining. However, it cannot be reversed before the inclined surface machining command (G68.2) or inclined surface machining command cancel (G69.1).

### Skip during inclined surface machining command

A skip operation during the inclined surface machining command is the same as the normal skip operation. The axis moves on the feature coordinate system.

| Machining program |
|---|
| N1 G68.2 Xx Yy Zz Ii Jj Kk; |
| N2 Bj; |
| N3 G90 G31 Z0. F100; |

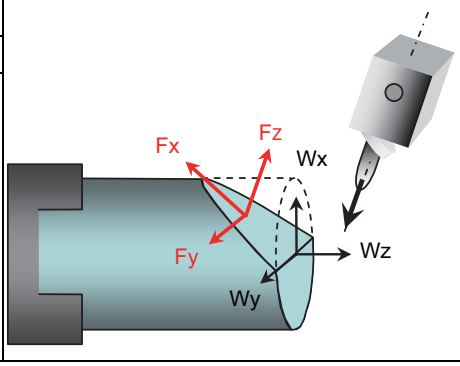


The axis moves to the Z axis direction of the feature coordinate system in the N3 block.

For the skip function, refer to each chapter in "Measurement Support Function".

### Combination with arbitrary axis exchange

When performing inclined surface machining in combination with an arbitrary axis exchange command, you need to set the rotary axis configuration parameters using the 2nd axis name. Set the parameter "#1450 5axis_Spec/bit0" to "1" (setting by the 2nd axis name), and assign the axis configuration for executing inclined surface machining to the rotary axis configuration parameter (#7900 or later) using the 2nd axis name (example: A1, B2).
If the inclined surface machining is commanded after arbitrary axis exchange has been completed while the parameter "#1450 5axis_Spec/bit0" is not designated, a program error (P952) will occur.

You can set the configurations up to the number of valid part systems (up to four part systems) in the rotary axis configuration parameter. With multiple configurations set, you can perform inclined surface machining in different axis configurations.

Inclined surface machining can be performed using the axis configuration in the part system with axis exchange completed by applying the rotary axis configuration parameter in the configuration in which all axes included in the part system are set.

- After the power was turned ON; the NC program was reset; the arbitrary axis exchange control (G140/G141/G142) was commanded; or mixed control I/II was commanded, the rotary axis configuration parameters are applied. After applying the rotary axis configuration parameter, command the inclined surface machining.
- If reset is commanded when the modal retention is designated in the reset initial ("#1151 rstint") or modal G code reset setting ("#1210 RstGmd/bitF"), the applied rotary axis configuration parameters are applied continuously.
  Also, when axis exchange is executed by arbitrary axis exchange control (G140/G141/G142) or mixed control I/II, the axis exchange status is applied continuously.
- If all the axes designated in the specified rotary axis configuration parameter do not exist in the part system, an operation error (M01 0186) will occur.

### Diameter/Radius designation switch

For the axis with the diameter designated, use the diameter value to configure the zero point offset setting of the inclined surface machining command or issue the axis movement command in the inclined surface machining command.
When switching to the radius value, command the diameter/radius designation switch (G10.9) before the inclined surface machining command. (The diameter/radius designation switch (G10.9) cannot be commanded while the inclined surface machining command is running.) When the designation method is switched to the radius designation, use the radius value to configure the zero point offset setting of the inclined surface machining command or issue the axis movement command in the inclined surface machining command.

### Inch/Metric changeover

The inch/metric command (G20/G21) cannot be designated while the inclined surface machining command is running. When switching the inch/metric mode, issue the inch/metric command before the inclined surface machining command.

### Fixed cycle

The fixed cycle command should be nested in the inclined surface machining command. Thus, it must be issued between the inclined surface machining command (G68.2) and the inclined surface machining cancel command (G69.1).

### Reference position return

While the inclined surface machining command is active, the automatic reference position return command (G28 or G30) runs in the feature coordinate system, and then it runs in the machine coordinate system from the intermediate point. If the operation mode is switched to "reference position return" during inclined surface machining command, an operation error (M01 0185) occurs.

### MDI interruption, PLC interruption, Macro interruption

MDI interruption, PLC interruption, and macro interruption are disabled while the inclined surface machining command is active.
If MDI interruption or PLC interruption is attempted while the inclined surface machining command is active, an operation error (M01 0185) occurs. If macro interruption is enabled, a program error (P951) occurs.
When inclined surface machining is commanded during MDI interruption, PLC interruption, or macro interruption, an alarm program error (P952) occurs.

### M code output during axis traveling

If the feature coordinate system is configured with the inclined surface machining command from the time when the M code output during axis traveling (G117) was commanded to the time when the miscellaneous command is output, the miscellaneous command output position is not obtained correctly after this. Do not command the inclined surface machining from the time when the M code output during axis traveling (G117) was commanded to the time when the miscellaneous command is output.

### Program restart

Program restart from the block after the inclined surface machining command cannot be implemented. If commanded, a program error (P49) occurs.

### Linear angle command/Geometric command

If a linear angle command or geometric command is issued while the inclined surface machining command is active, a program error (P951) occurs.

### Mixed control (cross axis control) I/II

The inclined surface machining command can be executed using the axis exchanged by mixed control I/II. However, if the mixed control I is commanded to the part system in which the inclined surface machining command is active, an program error (P951) occurs. When mixed control II is enabled, an operation error (M01 1035) occurs.

### Axis name switch

If the axis name switch is commanded to the part system in which the inclined surface machining command is active, a program error (P951) occurs.
If the inclined surface machining command is issued to a part system, to which the reference axis arrange (axis arrangement at power-on) is not applied, by the axis name switch function, a program error (P952) occurs.

### Control axis synchronization between part systems I/II

The inclined surface machining can be commanded using the reference axis of control axis synchronization between part systems I/II.
If the inclined surface machining command is issued to a part system that contains the synchronized axis of control axis synchronization between part systems I/II, a program error (P952) occurs.

### Control axis superimposition/arbitrary axis superimposition

If control axis superimposition or arbitrary axis superimposition is commanded to a part system in which the inclined surface machining command is active, an operation error (M01 1004) occurs.
If the inclined surface machining command is issued to a part system in which the control axis superimposition command or arbitrary axis superimposition command is active, a program error (P952) occurs.

### Inclined axis control

If the inclined surface machining command is issued to a part system in which inclined axis control is performed, a program error (P952) occurs. Do not enable inclined axis control during inclined surface machining.

### Synchronous tap

For the synchronous tapping cycle during the inclined surface machining command, in-position check improvement during synchronous tapping is invalid.

### Spindle position control (Spindle/C axis control)

If the inclined surface machining command is issued in spindle mode when the axis set to the spindle/C axis is used as a rotary axis of the inclined surface machining command, a program error (P934) occurs.
When the mode is changed to the spindle mode while the inclined surface machining command is active, an operation error (M01 0186) occurs. This error can be reset by NC reset.
When the inclined surface machining command modal is retained by resetting the modal retention (#1151 rstint = 0), an operation error (M01 0186) occurs at the timing of the next automatic operation start. To reset the inclined surface machining modal, command the inclined surface machining command cancel (G69.1) to the head (first block) of the machining program.

### Automatic operation handle interruption function

The automatic operation handle interruption can be used by enabling the automatic operation handle interruption ("#1284 ext20/bit6 = 1") during inclined surface machining.
When using the automatic operation handle interruption, always set the manual absolute to OFF. If automatic handle interruption is attempted in the following cases, an operation error (M01 0185) occurs.

(1) The manual ABS parameter ("#1145 I_abs") is set to "0" and the manual absolute is set to ON.
(2) The manual ABS parameter ("#1145 I_abs") is set to "1", and at least one axis is set to "manual ABS update ON" ("#1061 intabs = 1") in the part system.

### SSS Control

If axis movement is commanded for any axis not specified in the rotary axis configuration parameters during inclined surface machining when SSS is set to ON, a program error (P951) occurs.

### Rapid traverse block overlap

The rapid traverse block overlap is temporarily canceled while the inclined surface machining command is active.
When the rapid traverse block overlap (G00.5) is commanded while the inclined surface machining command is active, it becomes valid after the inclined surface machining command was canceled.

### Program format switch

If the program format switch command (G188/G189) is commanded while the inclined surface machining command is active, a program error (P29) occurs.

## 19.1.5 Precautions for Inclined Surface Machining

**Precautions**

(1) When G00 non-interpolation (*1) is set, the axis moves linearly (interpolation type ) to the programmed position.

(*1) Depends on the MTB specifications (parameter "#1086 G0Intp").

(2) When manual interruption is commanded with ABS ON while the inclined surface machining command is active, return to the position before interruption, and then restart automatic operation.

(3) Do not perform the manual interruption for the rotary axis while the inclined surface machining command is active.

(4) If the inclined surface machining command is issued while the inclined surface machining command is active, a program error (P951) occurs.

(5) When the rotary axis configuration parameter axis name setting method "#1450 5axis_Spec/bit0" is set to "0", if NC is started while an axis that does not exist in parameters #7900 to #7952 is designated, an operation error (M01 0127) occurs.

(6) When the inclined surface modal is retained at resetting, the axis exchange status is also retained even if the parameter is set so as to cancel the mixed control (cross axis control) by the reset function.
When the part system that retains the inclined surface machining modal is under mixed control, the axis exchange status of all the part systems is retained. To cancel the mixed control, release the inclined surface machining modal, then reset all the part systems in mixed control mode.
If an axis of a part system in which the inclined surface machining command is active is designated as the exchange target axis in the part system, axis exchange is not possible and the operation error (M01 1101) occurs regardless of the automatic operation mode.

(7) Even if "#1247 set19bit2" is set to "1" to retain the inclined surface machining modal when the power is turned OFF, other modals are not retained. Reconfigure modal settings as needed.

(8) If the inclined surface machining is performed during axis exchange when "#1247 set19bit2 is set to "1" to retain the inclined surface machining modal at power OFF, the axis arrangement is initialized at power OFF, so the inclined surface machining modal at power OFF is not retained.

(9) When the machine type is set to the tool tilt type or table tilt type with the rotary axis configuration parameter, do not combine the inclined surface machining command with the following functions. If the inclined surface machining command is issued, a program error (P932) occurs.

(10) Do not combine the inclined surface machining command with the following functions.
- Balance Cut (G14/G15)
- Mirror Image for Facing Tool Posts (G68/G69)
- Sub Part System Control I/II (G122/G144/G145)
- Automatic error detection (AUTED:YCFB)
- NC axis/PLC axis switch (NPCHGREQn:YBC0)
- Torque Limitation Skip (G160)

(11) While the inclined surface machining command is active, any axis not specified in the rotary axis configuration parameter can be commanded only in the G00 modal state. If the axis not specified in the rotary axis configuration parameter is commanded when the G code modal of group 01 is other than G00, a program error (P951) occurs.

(12) The acceleration rate at rapid traverse (G00) during the high-accuracy control is same as that at cutting feedrate (G01) (*1).

(*1) Acceleration rate determined by "#1206 G1bF" (maximum speed) and "#1207 G1btL" (time constant).

# 19.2 Simple Inclined Surface Machining

## Function and purpose

In a lathe with three orthogonal axes and one rotary axis on the tool side, this function enables simultaneous 4-axis control milling on an inclined surface along workpiece end face.
To facilitate machining on an inclined surface, this function uses three commands: Simple inclined surface control (G176), Simple tool center point control (G174), and Tool axis direction control (G53.1) as follows. The tool axis direction can be turned at right angles to the inclined surface by issuing the tool axis direction control command (G53.1) after the simple inclined surface control command (G176). When Simple tool center point control (G174) is given after Simple inclined surface control (G176), the direction of tool length is compensated in accordance with the tool angle.
For a machine configured with a turret, this function allows you to use any tool on the turret to carry out simple inclined surface machining.

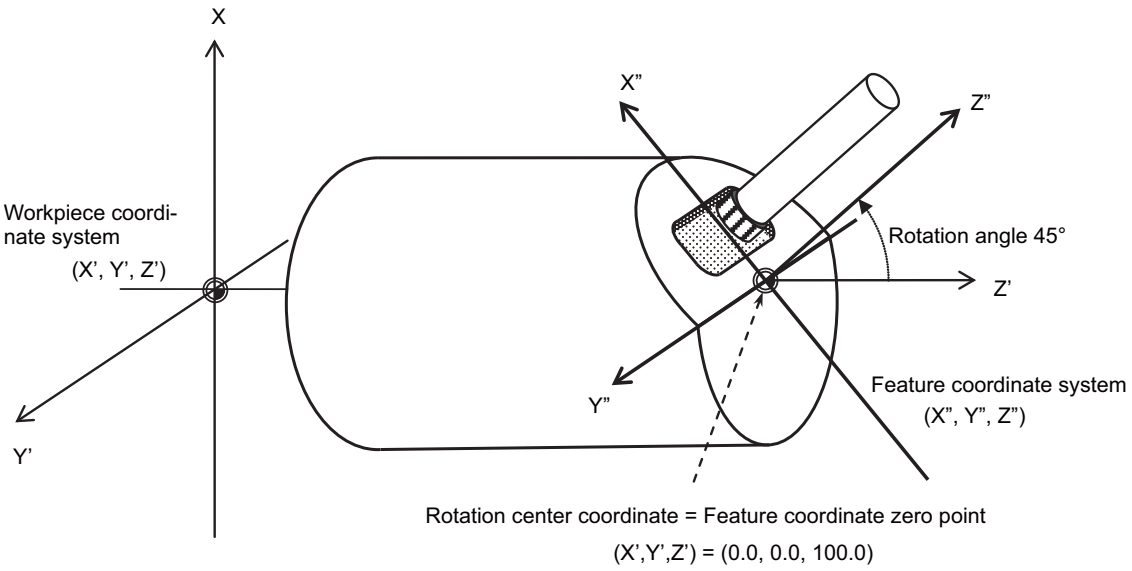


If simple inclined surface control (G176) or simple tool center point control (G174) is commanded while this function is not defined in the specifications, it causes a program error (P959).

### Simple inclined surface control (G176)

G176 enables a new coordinate system (called "feature coordinate system") to be defined. Feature coordinate system is obtained by rotating and parallel translating a plane using the X, Y and Z axes configuring the workpiece coordinate system as a rotary axis.
Consequently, there is no need to calculate the coordinate position in accordance with the inclined surface angle. This simplifies creation of a machining program. Refer to "19.2.1 Simple Inclined Surface Control ; G176".

### Simple tool center point control (G174)

G174 allows a tool length offset in the tool axis direction even when the tool axis direction is not parallel to the orthogonal coordinate system after rotation of the rotary axis.
Consequently, the nose of the tool mounted on the rotary axis can be kept in the programmed position at all times. This simplifies creation of a complicated-shape machining program. Refer to "19.2.2 Simple Tool Center Point Control ; G174".

### Tool axis direction control (G53.1)

The tool can be turned in the + Z direction of the feature coordinate system using the G53.1 command. This eliminates the need for you to mind the feature coordinate system's direction or tool axis' rotation direction, resulting in greater ease of programming. Refer to "19.2.3 Tool Axis Direction Control ; G53.1".

## Detailed description

### Supporting axis configuration

This function is available for the machines equipped with the following axis configurations.

| [Work-moving-type tool tilt] | [Work-stationary-type tool tilt] |
|---|---|
| Tool head side: Rotary axis<br>X-Y: Orthogonal axis<br>Z : Spindle | Tool head side: Rotary axis<br>XZY: Orthogonal axis |

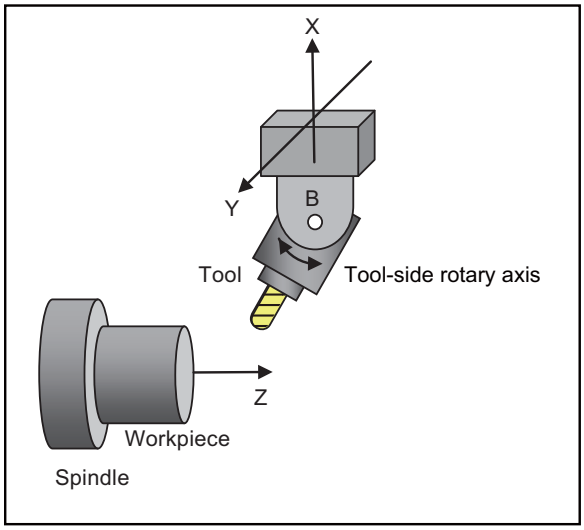


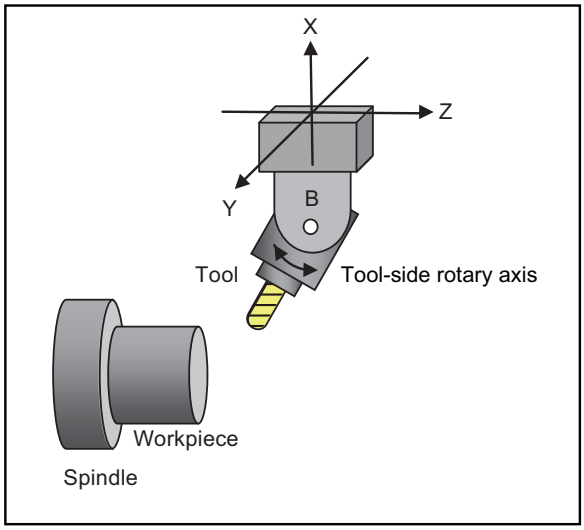


| [Turret-type tool tilt] |
|---|
| Tool head side: Rotary axis<br>X-Y: Orthogonal axis<br>Any tool on the turret can be used. |

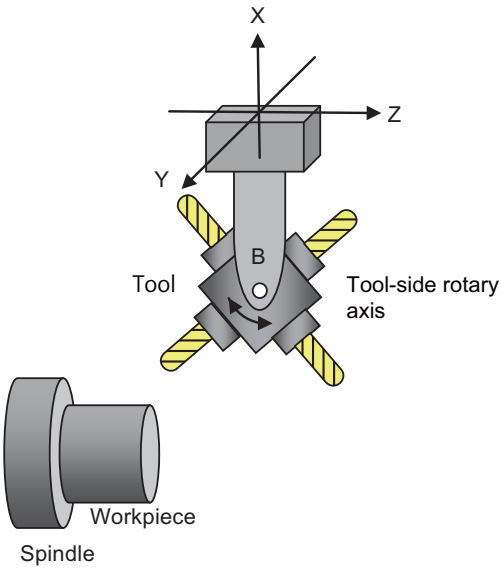

## Tool length offset in simple inclined surface machining

(1) Tool length offset setting when simple inclined surface machining (G174, G176) is active

While simple inclined surface machining is ON, tool offset can be applied in the feature coordinate system axis direction.
Tool offset is set while the tool for simple inclined surface machining is facing Z(-) of the machine coordinate system.
For tool offset, specify the vector from the tool tip to the B axis rotation center.
The offset setting methods are different between when the rotation center offset (rotary axis configuration parameters "#7934 COFST2H" to "#7936 COFST1T") is used together or not.

(a) When using rotation center offset together

Specify the vector from the tool tip to the tool mount position in tool offset, and the vector from the tool mount position to the rotation center position in rotation center offset ("#7934 COFST2H" to "#7936 COFST1T").

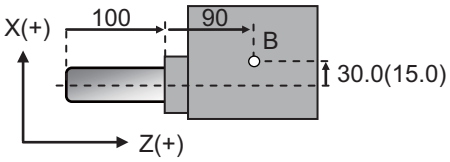


| | |
|---|---|
| Tool offset | X:0.0<br>Y:0.0<br>**Z:100.0** |
| Rotation center offset<br>(radius value setting) | **X:15.0**<br>Y:0.0<br>**Z:90.0** |

(b) When not using rotation center offset together

Specify the length from the tool tip to the rotation center position in tool offset.

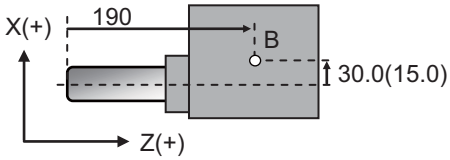


| | |
|---|---|
| Tool offset | **X:30.0(15.0)**<br>Y:0.0<br>**Z:190.0** |
| Rotation center offset<br>(radius value setting) | X:0.0<br>Y:0.0<br>Z:0.0 |

(2) Tool length direction when simple inclined surface machining control (G176) is used as a single command (when not combined with simple tool center point control (G174))

When Simple inclined surface control (G176) is commanded, the tool length offset is applied in the feature coordinate system direction (Z' direction in the following illustration).

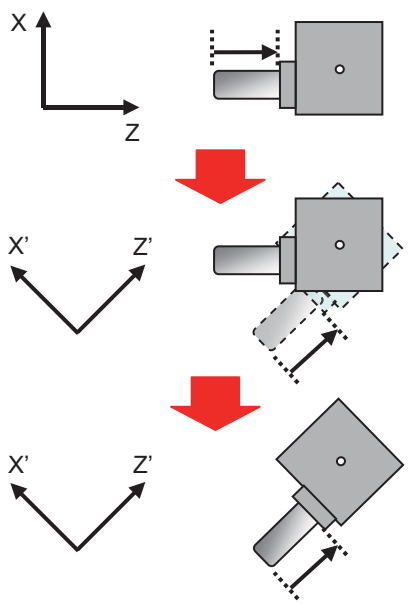


| |
|---|
| Before G176 is issued, tool length offset is applied in machine coordinate direction.<br>(Tool tip position = Programmed command position) |
| After G176 has been issued, tool length offset is applied in feature coordinate direction.<br>(Tool tip position and programmed command position are almost the same.) |
| By turning B axis, the tool is directed to the feature coordinate system direction, and so the tool's direction coincides with the tool length offset direction.<br>(Tool tip position = Programmed command position) |

### Combination with arbitrary axis exchange function

In a compounded machine, a single rotary tool may be shared among multiple part systems. In this case, use the arbitrary axis exchange control function that allows you to freely exchange any axis between part systems.
When performing inclined surface machining in combination with an arbitrary axis exchange (G140) command, you need to set the rotary axis configuration parameters using the 2nd axis name. Set the parameter "#1450 5axis_Spec/bit0" to "1" (setting by the 2nd axis name), and assign the axis configuration for executing simple inclined surface machining to the rotary axis configuration parameter (#7900 or later) using the 2nd axis name (example: A1, B2).
If the simple inclined surface control (G176) or simple tool center point control (G174) is commanded after the arbitrary axis exchange has been completed while the parameter "#1450 5axis_Spec/bit0" is not designated, a program error (P952) or (P941) will occur.
You can set the configurations up to the number of valid part systems (up to four part systems) in the rotary axis configuration parameter. With multiple configurations set, you can perform simple inclined surface machining in different axis configurations.

(1) Application of rotary axis configuration parameters

Simple inclined surface machining can be performed using the axis configuration in the part system with axis exchange completed by applying the rotary axis configuration parameter in the configuration in which all axes included in the part system are set.

(2) Methods to apply the rotary axis configuration parameters

The following two methods are provided to apply rotary axis configuration parameters. Which method is to be applied depends on the MTB specifications (parameter "#1450 5axis_Spec/bit2" (application of rotary axis configuration parameters)).

| | |
|---|---|
| Automatic selection method | When the power is turned ON, NC is reset, or the arbitrary axis exchange control (G140/G141/G142) is commanded, the system searches for the configuration in which all the axes of the command's part system are set in the order of the designated rotary axis configuration parameters: self part system, $1, $2, and after. The system applies the rotary axis configuration parameters of the configuration that first matches the designated conditions.<br>This method is available when the rotary axis configuration parameters that match the axis configuration for executing simple inclined surface machining is determined uniquely. |
| PLC designation method | Designate the rotary axis configuration parameters to be applied to the axis configuration for executing simple inclined surface machining using the R register, and enable it with the M command or T command.<br>This method is available when designating the parameters to be applied. |

(3) Use example

Case to first perform the inclined surface machining in the part system 1 ($1), and change the part system of X1, Z1, and B1 axes to the part system 2 ($2), and then perform the inclined surface machining in $2 using the changed axes.

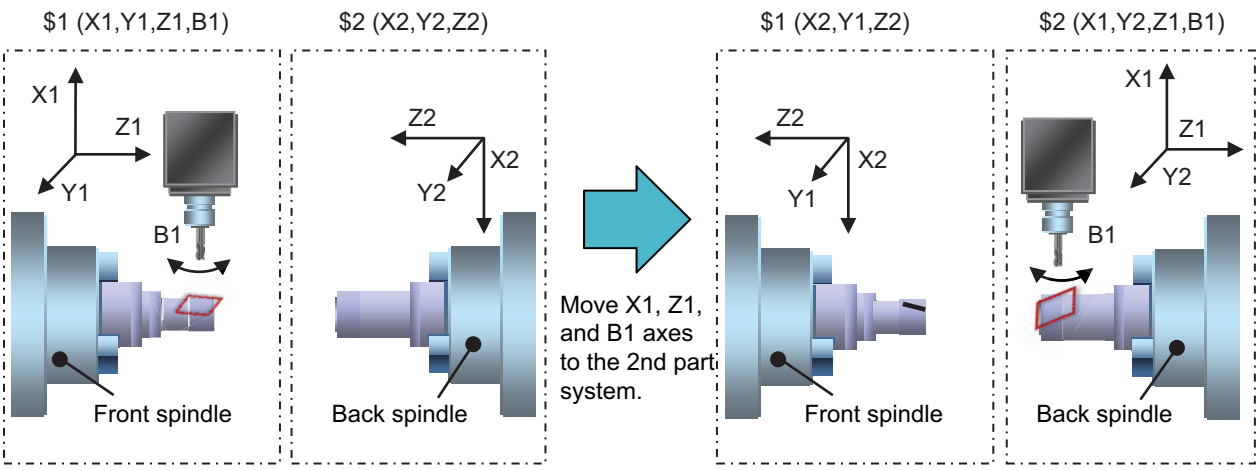

| [$1] | | [$2] | |
|---|---|---|---|
| G28 X0. Y0. Z0. B0.;<br>T1010 ; | | G28 X0 Y0. Z0. B0.; | |
| G176 X0. Z0. D-60.;<br>G174 G00 B-60.;<br>G01 X0. Y0. Z10. F1000;<br>G175;<br>G69.1; | Execute simple inclined surface machining command, referencing the rotary axis configuration parameters of configuration 1. | | |
| !2 L10; | <-Timing synchronization-> | !1 L10; | |
| G140 X=X2 Y=Y1 Z=Z2<br>B=B2; | Use X1, Z1, and B1 axes in $2. | G140 X=X1 Y=Y2 Z=Z1<br>B=B1 ; | Search the configuration of the rotary axis configuration parameter. Apply the configuration 3 parameter which matches first. |
| | | T2020;<br>G176 Y0. Z0. D30.;<br>G174;<br>G01 Y10. Z5. F1000<br>G175;<br>G69.1; | Execute simple inclined surface machining, referencing configuration 3 of the rotary axis configuration parameters. |
| !2 L20 | <-Timing synchronization-> | !1 L20 | |
| G142; | Return from axis exchange | G142; | |
| M2; | | M2; | |

[Parameter configuration example (For 4-axis tool tilt)]

| Rotary axis configuration parameter | | Configuration 1 | Configuration 2 | Configuration 3 | Configuration 4 |
|---|---|---|---|---|---|
| #7900 | RCDAX_I | X1 | X2 | X1 | X2 |
| #7901 | RCDAX_J | Y1 | Y2 | Y2 | Y1 |
| #7902 | RCDAX_K | Z1 | Z2 | Z1 | Z2 |
| #7930 | SLCT_T2 | 2 | 2 | 2 | 2 |
| #7932 | ROTAXT2 | B1 | B2 | B1 | B2 |

<Note>

- If the simple inclined surface machining command after the arbitrary axis exchange is to be drawn with the graphic check, the machining path will be drawn but the arbitrary axis exchange command will be ignored.
- To manually take out the tool used by the simple inclined surface machining control, use 3-dimensional manual feed.

## Operation example

The following shows the machining program intended to cut grooves in the shape as illustrated above on an inclined surface of cylinder as illustrated in the figure below. The main program uses an inclined surface machining command to define a feature coordinate system and index the rotary axis, while the sub program (O100) executes grooving.

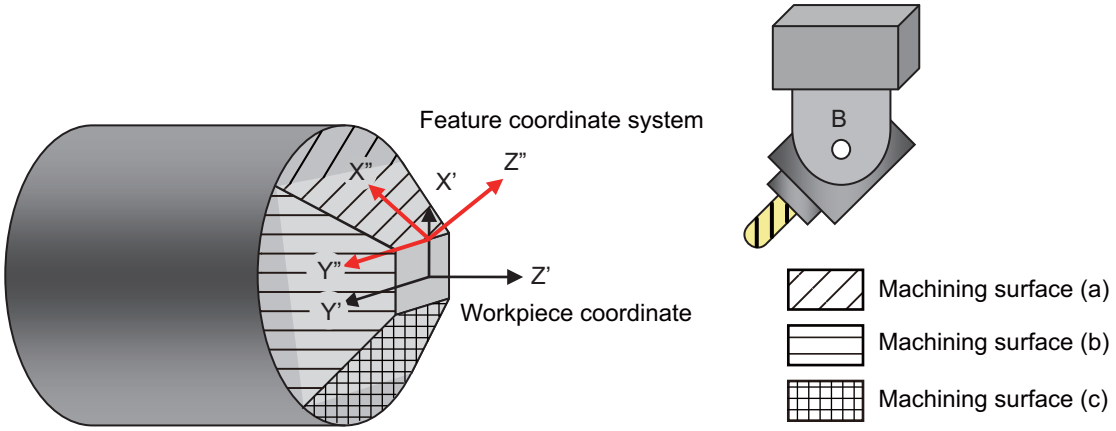


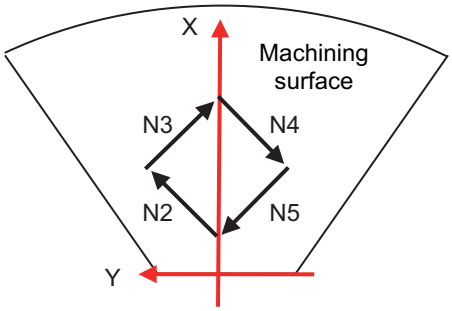


Subprogram O100 (Grooving)

```
N1 G90 G00 X20. Y0. ;
N2 G01 X40. Y10. F1000 ;
N3 G01 X60. Y0. ;
N4 G01 X40. Y-10. ;
N5 G01 X20. Y0. ;
N6 G00 X0. Y0. ;
M99 ;
```

| | |
|---|---|
| : | Positioned in the tool exchange position |
| T0101; | Tool exchange (Tool No. and offset No. command) |
| G176, G174; | During modal, the tool offset in Z axis direction is used as the tool length offset. |
| G90 G00 X0 Y0 Z0 C0.; | Index Surface (a) |
| G176 X10. Z0. D45.; | Simple inclined surface machining control command<br>Define the feature coordinate system by using (X',Y',Z')=(10.0,0.0,0.0) of the workpiece coordinate system as the feature coordinate zero point, and turning the coordinate system 45° around X and Z axes. |
| G00 X0. Y0. Z0. B45. ; | Position the tool tip to be on (X',Y',Z')=(0.0,0.0,0.0) of the feature coordinate system with the B axis head inclined by 45°. |
| M98 P100; | Execute milling on Surface (a) (Subprogram O100)<br>Control the XYZ machine position so that the tool tip point passes through the command path on the feature coordinate system. |
| G00 C90.; | Index Surface (b) |
| M98 P100; | Execute milling on Surface (b) (Subprogram O100) |
| : | Ditto on Surfaces (c) and (d). |
| G69.1; | Simple inclined surface control cancel<br>The feature coordinate system is canceled. No axis movement is caused by the offset cancel. The axes retain their current positions. |
| G00 X100. Y0. Z150. B0.; | Since the feature coordinate system has been canceled, the programmed position is relative to the workpiece coordinate system. Tool offset is in Z axis direction, regardless of the B axis head angle. (Normal tool compensation) |
| : | : |

## Relationship with other functions

### Commands given during simple inclined surface machining mode

The commands marked with "○" in the table are able to be commanded during the simple inclined surface control (G176) or simple tool center point control (G174) modal state. If any other command is issued during the simple inclined surface control (G176) modal state, the program error (P951) occurs. If any other command is issued during the simple tool center point control (G174) modal state, the program error (P942) occurs. These alarms are cancelled by NC reset.

| Group | G code Lists | | | | Function | G176 | G174 |
|---|---|---|---|---|---|---|---|
| | 2 | 3 | 4 | 5 | | | |
| 0 | G04 | | | | Dwell | ○ | ○ |
| | G05 P0, P1, P2, P10000 | | | | High-speed machining mode, High-speed high-accuracy control II | ○ | ○ |
| | G05.1 Q0, Q1 | | | | High-speed high-accuracy control I | ○ | P34 |
| | G08 P1 | | | | High-accuracy control | ○ | ○ |
| | G09 | | | | Exact stop | ○ | ○ |
| | G10, G11 | | | | Parameter input by program, Compensation data input by program | ○ | P942 |
| | G27 | | | | Reference position check | P951 | P942 |
| | G28 | | | | Automatic reference position return | ○ | P942 |
| | G29 | | | | Start position return | ○ | P942 |
| | G30 | | | | 2nd to 4th reference position return | ○ | P942 |
| | G30.1 | | | | Tool exchange position return 1 | ○ | P942 |
| | G30.2-G30.5 | | | | Tool exchange position return 2 to 5 | ○ | P942 |
| | G31 | | | | Skip/Speed change skip (*2) | P951 | P942 |
| | G31.1-G31.3 | | | | Multi-step skip (*2) | P951 | P942 |
| | G37 | | G36/G37 | | Automatic tool length measurement | P951 | P942 |
| | G50 | G92 | G50 | G92 | Spindle clamp speed setting<br>Coordinate system setting | P951 | P942 |
| | G52 | | | | Local coordinate system setting | P951 | P942 |
| | G53 | | | | Machine coordinate system selection | ○ | P942 |
| | G53.1 | | | | Tool axis direction control | ○ | P942 |
| | G65 | | | | Macro simple call | ○ | ○ |
| | G110 | | | | Mixed control (cross axis control) I | P951 | P942 |
| | G111 | | | | Axis name switch | P951 | P942 |
| | G113, G114.1-G114.3, G164 | | | | Spindle synchronization, Spindle superimposition command, Cancel | P951 | P942 |
| | G115, G116 | | | | Start point designation synchronization (*3) | P951 | P942 |
| | G122, G144, G145 | | | | Sub part system control I/II, Sub part system completion standby | P951 | P942 |
| | G125 | | | | Control axis synchronization between part systems | (*5) | P942 |
| | G126 | | | | Control axis superimposition | P951 | P942 |
| | G156 | | | | Arbitrary axis superimposition | P951 | P942 |
| 1 | G00, G01 | | | | Positioning, Linear Interpolation | ○ | ○ |
| | G02, G03 | | | | Circular interpolation, Helical interpolation | ○ | (*1) |
| | G32 | G33 | G32 | G33 | Thread cutting | P951 | P942 |
| | G34,<br>G35, G36 | | | | Variable lead thread cutting<br>Circular screw | P951 | P942 |
| 2 | G17, G18, G19 | | | | Plane selection | ○ | ○ |
| 3 | G190 | G90 | G190 | G90 | Absolute command | ○ | ○ |
| | G191 | G91 | G191 | G91 | Incremental command | | |
| 4 | G22 | | | | Barrier check | P951 | P942 |
| | G23 | | | | Barrier check cancel | P951 | P942 |

| Group | G code Lists | | | | Function | G176 | G174 |
|---|---|---|---|---|---|---|---|
| | 2 | 3 | 4 | 5 | | | |
| 5 | G98 | G94 | G98 | G94 | Feed per minute | ○ | ○ |
| | G99 | G95 | G99 | G95 | Feed per revolution | ○ | P942 |
| 6 | G20, G21 | | | | Inch command, Metric command | P951 | P942 |
| 7 | G40, G41, G42 | | | | Tool nose radius compensation, Tool radius compensation (tool nose point 0 is used) | ○ | P942 |
| 8 | G174 | | | | Simple tool center point control | ○ | ○ |
| | G175 | | | | Simple tool center point control cancel | ○ | ○ |
| 9 | G70, G71, G72, G73, G74, G75, G76, G76.1, G76.2 | | | | Compound type fixed cycle for turning machining | P951 | P942 |
| | G79 | G83.2 | G79 | G83.2 | Deep hole drilling cycle 2 | ○ | ○ |
| | G81, G82, G83, G83.1, G85, G87, G89 | | | | Fixed cycle for drilling/Fixed cycle for drilling (MITSUBISHI CNC special format)<br>(*) Excluding the tapping cycle. | ○ | ○ |
| | G84, G88, G84.1, G84.2, G88.1 | | | | Tapping cycle (X/Z)/<br>Reverse tapping cycle (X/Z)/<br>Synchronous tapping cycle | ○ | P942 |
| | G90<br>G92<br>G94 | G77<br>G78<br>G79 | G90<br>G92<br>G94 | G77<br>G78<br>G79 | Longitudinal cutting fixed cycle<br>Thread cutting fixed cycle<br>Face cutting fixed cycle | P951 | P942 |
| 10 | - | G98<br>G99 | - | G98<br>G99 | Hole drilling cycle I point return, R point return | ○ | ○ |
| 12 | G54-G59, G54.1 | | | | Workpiece coordinate system selection 1 to 6, Extended workpiece coordinate system selection | P951 | P942 |
| 13 | G61 | | | | Exact stop mode | ○ | ○ |
| | G61.1 | | | | High-accuracy mode | ○ | ○ |
| | G62 | | | | Automatic corner override | ○ | P942 |
| | G64 | | | | Cutting mode | ○ | ○ |
| 14 | G66, G66.1, G67 | | | | Macro modal call | ○ | ○ |
| 15 | G68, G69 | | | | Mirror image for facing tool posts (*4) | ○ | ○ |
| 16 | G68.1 | | | | Coordinate rotation by program | P951 | P942 |
| | G69.1 | | | | Inclined surface machining cancel | ○ | ○ |
| | G176 | | | | Simple inclined surface control | P951 | P942 |
| 17 | G96, G97 | | | | Constant surface speed control | P951 | P942 |
| 18 | G14, G15 | | | | Balance cut | ○ | ○ |
| 19 | G12.1, G13.1 | | | | Milling interpolation | P951 | P942 |
| 20 | G43.1, G44.1, G47.1 | | | | 1st spindle control mode, 2nd spindle control mode, multiple-spindle simultaneous control mode | ○ | ○ |
| | M98, M99 | | | | Subprogram call | ○ | ○ |
| | F | | | | Feedrate command | ○ | ○ |
| | M, S, B | | | | M, S, B command | ○ | ○ |
| | T | | | | Tool No., compensation amount command | ○ | P942 |
| | Macro instruction | | | | Local variable, Common variable, Arithmetic commands (such as four basic arithmetic rule, trigonometric functions, square root), Control commands (IF-GOTO- and WHILE-DO-) | ○ | ○ |

(*1) Refer to "Circular interpolation, helical interpolation (G02, G03)" of the "Relationship with other functions".

(*2) Only the three orthogonal axes designated by the rotary axis configuration parameter can be commanded. If used for a rotary axis, the program error (P951) occurs.

(*3) If you use start point designation timing synchronization during G176 or G174 modal status, specify the timing synchronization position with respect to the feature coordinate system.

(*4) Do not issue this G code command under simple inclined surface control or simple tool center point control.

(*5) This command is available when any axis in the part system of the simple inclined surface machining is designated as a reference axis. If any axis in the part system of the simple inclined surface machining are designated as a synchronized axis, the operation error (M01 1037) occurs.

### Modes where simple inclined surface machining is able to be commanded

During the modal status marked with "○" below, simple inclined surface control (G176) and simple tool center point control (G174) commands can be issued.
In any mode other than them, the simple inclined surface control command (G176) causes the program error (P952), the simple tool center point control command (G174) causes the program error (P941), and the tool axis direction control command (G53.1) causes the program error (P953). These alarms are cancelled by NC reset.

| Group | G code Lists | | | | Function | G176 | G174 | G53.1 |
|---|---|---|---|---|---|---|---|---|
| | 2 | 3 | 4 | 5 | | | | |
| 0 | G05 P0, P1, P2, P10000 | | | | High-speed machining mode, High-speed high-accuracy control II | ○ | ○ | ○ |
| | G05.1 Q0, Q1 | | | | High-speed high-accuracy control I | ○ | ○ | ○ |
| | G52 | | | | Local coordinate system setting | ○ | ○ | ○ |
| | G110 | | | | Mixed control (cross axis control) I | ○ | P941 | ○ |
| | G111 | | | | Axis name switch | P952 | P941 | P953 |
| | G113, G114.1-G114.3, G164 | | | | Spindle synchronization, Spindle superimposition command, Cancel (*1) | ○ | ○ | ○ |
| | G115, G116 | | | | Start point designation synchronization (*1) | ○ | ○ | ○ |
| | G122, G144, G145 | | | | Sub part system control I/II, Sub part system completion standby | ○ | ○ | ○ |
| | G125 | | | | Control axis synchronization between part systems (*2) | ○ | P941 | ○ |
| | G126 | | | | Control axis superimposition | ○ | ○ | ○ |
| | G156 | | | | Arbitrary axis superimposition | ○ | ○ | ○ |
| 1 | G00, G01 | | | | Positioning, Linear Interpolation | ○ | ○ | ○ |
| | G02, G03 | | | | Circular interpolation, Helical interpolation | P952 | P941 | P953 |
| | G32 | G33 | G32 | G33 | Thread cutting | P952 | P941 | P953 |
| | G34 | | | | Variable lead thread cutting | P952 | P941 | P953 |
| | G35, G36 | | | | Circular screw | | | |
| 2 | G17, G18, 19 | | | | Plane selection | ○ | ○ | ○ |
| 3 | G190 | G90 | G190 | G90 | Absolute command | ○ | ○ | ○ |
| | G191 | G91 | G191 | G91 | Incremental command | | | |
| 4 | G22 | | | | Barrier check | P952 | P941 | P953 |
| | G23 | | | | Barrier check cancel | ○ | ○ | ○ |
| 5 | G98 | G94 | G98 | G94 | Feed per minute | ○ | ○ | ○ |
| | G99 | G95 | G99 | G95 | Feed per revolution | ○ | P941 | ○ |
| 6 | G20, G21 | | | | Inch command, Metric command | ○ | ○ | ○ |
| 7 | G41, G42 | | | | Tool nose radius compensation, Tool radius compensation (tool nose point 0 is used) | P952 | P941 | P953 |
| | G40 | | | | Tool nose radius compensation, Tool radius compensation cancel | ○ | ○ | ○ |
| 8 | G174 | | | | Simple tool center point control | P952 | ○ | P942 |
| | G175 | | | | Simple tool center point control cancel | ○ | ○ | ○ |
| 9 | G70, G71, G72, G73, G74, G75, G76, G76.1, G76.2 | | | | Compound type fixed cycle for turning machining | P952 | P941 | P953 |
| | G79 | G83.2 | G79 | G83.2 | Deep hole drilling cycle 2 | P952 | P941 | P953 |
| | G80 | | | | Fixed cycle cancel | ○ | ○ | ○ |
| | G81, G82, G83, G83.1, G84, G85, G87, G88, G89, G84.1, G84.2, G88.1 | | | | Fixed cycle for drilling/Fixed cycle for drilling (MITSUBISHI CNC special format) | P952 | P941 | P953 |
| | G90 | G77 | G90 | G77 | Longitudinal cutting fixed cycle | P952 | P941 | P953 |
| | G92 | G78 | G92 | G78 | Thread cutting fixed cycle | | | |
| | G94 | G79 | G94 | G79 | Face cutting fixed cycle | | | |

| Group | G code Lists | | | | Function | G176 | G174 | G53.1 |
|---|---|---|---|---|---|---|---|---|
| | 2 | 3 | 4 | 5 | | | | |
| 10 | - | G98 G99 | - | G98 G99 | Hole drilling cycle I point return, R point return | ○ | ○ | ○ |
| 12 | G54-G59, G54.1 | | | | Workpiece coordinate system selection 1 to 6, Extended workpiece coordinate system selection | ○ | ○ | ○ |
| 13 | G61 | | | | Exact stop mode | ○ | ○ | ○ |
| | G61.1 | | | | High-accuracy mode | ○ | ○ | ○ |
| | G62 | | | | Automatic corner override | P952 | P941 | P953 |
| | G64 | | | | Cutting mode | ○ | ○ | ○ |
| 14 | G67 | | | | Macro modal call Cancel | ○ | ○ | ○ |
| 15 | G68 | | | | Mirror image for facing tool posts | P952 | P941 | P953 |
| | G69 | | | | Mirror image for facing tool posts cancel | ○ | ○ | ○ |
| 16 | G68.1 | | | | Coordinate rotation by program | P952 | P941 | P953 |
| | G69.1 | | | | Coordinate rotation by program cancel, inclined surface control cancel, or simple inclined surface machining cancel | ○ | ○ | P953 |
| | G176 | | | | Simple inclined surface control | P952 | ○ | ○ |
| 17 | G96, G97 | | | | Constant surface speed control | P952 | P941 | P953 |
| 18 | G14, G15 | | | | Balance cut | P952 | P941 | P953 |
| 19 | G12.1 | | | | Milling interpolation | P952 | P941 | P953 |
| | G13.1 | | | | Milling interpolation cancel | ○ | ○ | ○ |
| 20 | G43.1, G44.1, G47.1 | | | | 1st spindle control mode, 2nd spindle control mode, multiple-spindle simultaneous control mode | ○ | ○ | ○ |

(*1) Do not issue the command under Inclined surface control or tool center point control.

(*2) This command is available only when there is no synchronized axis in the part system of the simple inclined surface machining. If there is a synchronized axis in the part system of the simple inclined surface machining, the program error (P952) occurs.

### Arbitrary axis exchange (G140, G141, G142)

You can perform simple inclined surface control (G176), simple tool center point control (G174), or tool axis direction control (G53.1) by using the axis that was exchanged with the arbitrary axis exchange command.
However, if you use an axis exchange command in a certain part system to take an axis out of any other part system that is in simple inclined surface control (G176) or simple tool center point control (G174) modal, the operation error (M01 1101) occurs. These alarms are cancelled by NC reset. If an arbitrary axis exchange command is issued during simple inclined surface control (G176) or simple tool center point control (G174) mode, the program error (P951) or (P942) occurs.

### Resetting

Whether modal information of the simple inclined surface control (G176) is retained or canceled by resetting depends on the MTB specifications (parameters "#1151 rstint" and "#1210 RstGmd/bitF"). However, modal information of simple tool center point control (G174) is canceled regardless of which parameter is designated.

| #1151 rstint (Reset initial) | #1210 RstGmd/bitF (Modal G code reset setting) | Reset 1 | Reset 2 | Reset & rewind |
|---|---|---|---|---|
| 0 | 0 | Retains all modals. | Cancel | Cancel |
| | 1 | Retains all modals. | Retains only the inclined surface. | Retains only the inclined surface. |
| 1 | 0 | Cancel | Cancel | Cancel |
| | 1 | Retains only the inclined surface. | Retains only the inclined surface. | Retains only the inclined surface. |

### Emergency stop, power OFF

Whether modal information of the simple inclined surface control (G176) is retained or canceled when emergency stop or power OFF occurs during simple inclined surface machining mode depends on the MTB specifications (parameter "#1247set19/bit2").

| #1247 set19 / bit2 | Emergency stop, power OFF |
|---|---|
| 0 | Cancel |
| 1 | Retains inclined surface machining modal. |

### Circular interpolation, helical interpolation (G02, G03)

Issuing a circular command during simple tool center point control (G174) causes the program error (P942). However, a circular interpolation and helical interpolation are enabled under the following conditions.

(1) When simple inclined surface control (G176) is not active, and B axis (the tool head rotation axis) angle is at 0° (machine coordinate system)

(2) When simple inclined surface control (G176) is active, and B axis (the rotation angle of the tool head) is at an angle that makes the tool direction coincide with a line perpendicular to the inclined surface.
The angles of B axis and inclined surface are both clamped in the range of 0° to 360°.

### Reference position return command (G28, G30)

If G28 or G30 is issued during simple inclined surface control (G176), the control is performed relative to the feature coordinate system up to the intermediate point, and then relative to the machine coordinate system after the point.

### Reading position information (system variables)

During simple inclined surface control (G176), the coordinates that are relative to the feature coordinate system are set to the system variables for position information (#5001 to #5100+n (excluding #5021 to #5021+n)). However, the coordinates that are relative to the machine coordinate system are set to the variables #5021 to #5021+n (machine coordinate values) even during simple inclined surface control.

### Tool No./Tool compensation No. (T Code)

If the simple tool center point control (G174) is commanded without issuing a T command, the program error (P941) occurs. If the tool axis direction control (G53.1) is commanded, the program error (P953) occurs.
If a T command is issued during simple tool center point control modal (G174), the program error (P942) results.
These alarms are cancelled by NC reset.
Make sure to perform tool compensation with the T command before the simple inclined surface machining.

### Restart search

If you execute restart search during simple inclined surface control (G176) or simple tool center point control (G174) mode, the program error (P49) occurs.

### Linear angle command, Figure rotation command

If a linear angle command or figure rotation command is executed during simple inclined surface control mode (G176), the program error (P951) occurs.

### Manual arbitrary reverse run

Reverse run is disabled for the simple inclined surface control start or cancel command (G176 or G69.1) or for the simple tool center point control start or cancel command (G174 or G175). It is not possible to go back to a block that precedes the command block.
Reverse run is enabled during simple inclined surface control (G176) or simple tool center point control (G174) mode. A programmed path can be reversed.

### Manual speed command

Reverse run is enabled during simple inclined surface control (G176) or simple tool center point control (G174) mode. A programmed path can be reversed.

### Inclined Axis Control

When the inclined axis control is active (YC35:ON), do not issue a command that causes the inclined axis to move during simple inclined surface control (G176) or simple tool center point control (G174).

### Actual feedrate display

During the simple tool center point control (G174) mode, the screen indicates the travel speed of the tool tip position.

### Cutting feed / Rapid traverse override

During the simple tool center point control (G174) mode, the override is applied to the feedrate on the tool tip point. If speed clamp is ON, the override is applied to the clamp speed.

### Corner chamfering/Corner R

If the corner chamfering/corner R command is issued during simple tool center point control (G174) mode, simple tool center point control (G174) will be valid for the path after corner chamfering/corner R.
In the block for simple tool center point control (G174) command, do not command corner chamfering/corner R.

### 3-dimensional manual feed

(1) Manual feed in feature coordinate system

When the parameter "#7912 NO_MANUAL" is "0", and you perform manual feed in the simple inclined surface control modal status, the feed can be done in the feature coordinate axis direction. In addition, when you use the PLC output signals YD1A (3-dimensional manual feed [JOG,INC] in feature coordinate system) and YD1D (3-dimensional manual feed [1st handle] in feature coordinate system), you can switch the axial direction between the feature coordinate and machine coordinate systems.

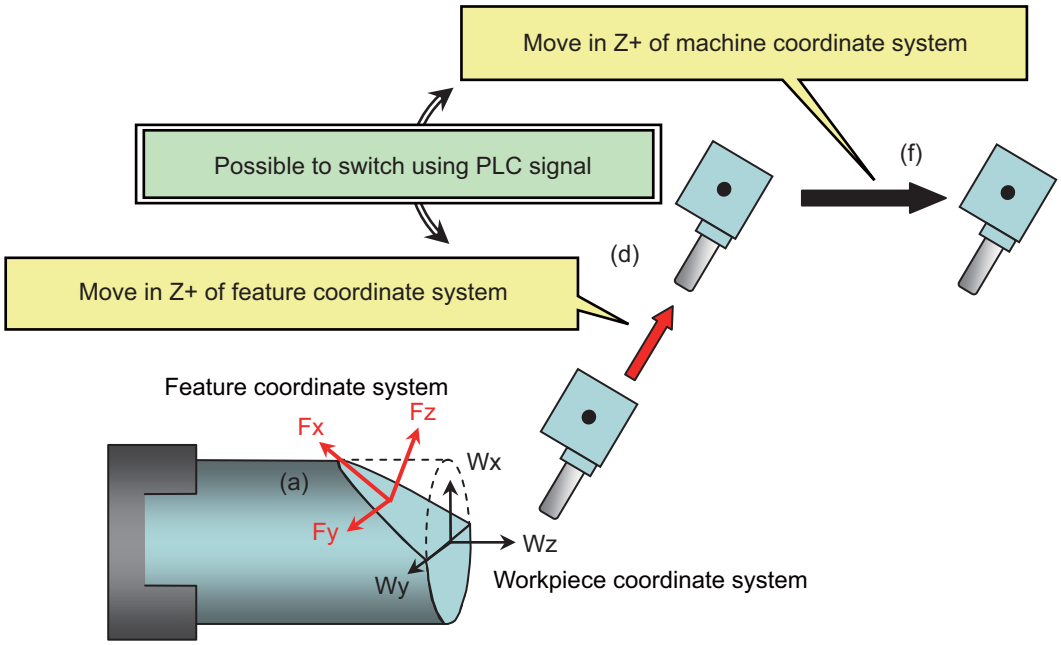


(a) Activate memory mode/MDI mode and command simple inclined surface control (G176) through a program.
(b) Use Reset 1 ("#1151 rstint" = 0) to reset the NC with the feature coordinate system retained.
(c) Change the mode to handle, and select the feature coordinate system (turn ON the PLC output signal YD1D).
(d) Select the Z+ direction of the handle.
-> The axis moves in Z+ direction of the feature coordinate system.

(e) Select the machine coordinate system (turn OFF the PLC output signal YD1D).

(f) Select the Z+ direction of the handle.
-> The axis moves in Z+ direction of the machine coordinate system.

At this time, the NC retains the feature coordinate system. Thus, by selecting the feature coordinate system again (turning ON the PLC signal YD1D), you can move the axis in the feature coordinate axis direction. If you wish to cancel the feature coordinate system, switch the mode to memory/MDI, and issue the Inclined surface control cancel command (G69.1) through a program.

(2) Counter display during manual feed

[Inclined surface coordinate position counter]

The machine position on the feature coordinate system is displayed in the inclined surface coordinate position counter.
If inclined surface control cancel command is invalid, the machine position on the workpiece coordinate system is displayed in the inclined surface coordinate position counter.
However, while the manual absolute signal is OFF, the inclined surface coordinate position counter is not updated.

| Manual absolute signal | Inclined surface machining command | Selected coordinate system | Inclined surface coordinate position counter |
|---|---|---|---|
| ON | ON | Feature coordinate system | The machine position is displayed on the feature coordinate system. |
| | | Other than feature coordinate system | |
| | OFF | Feature coordinate system | The machine position is displayed on the workpiece coordinate system. |
| | | Other than feature coordinate system | |
| OFF | ON/OFF | - | Not updated |

[Manual interruption amount counter]

If simple inclined surface control is valid, the manual interruption amount on the feature coordinate system is displayed in the manual interruption amount counter.
If simple inclined surface control is invalid, the manual interruption amount on the machine coordinate system is displayed in the manual interruption amount counter.
However, while the manual absolute signal is ON, the manual interruption amount counter is not updated.

| Manual absolute signal | Inclined surface machining command | Selected coordinate system | Manual interruption amount counter |
|---|---|---|---|
| ON | ON/OFF | - | Not updated |
| OFF | ON | - | The interruption amount in the feature coordinate system is displayed. |
| | OFF | Machine coordinate system | The interruption amount in the machine coordinate system is displayed. |

## Spindle position control (Spindle/C axis control)

If the simple inclined surface machining is commanded in spindle mode when the axis set for Spindle/C axis control is used as a rotary axis of the simple inclined surface machining, a program error (P934) occurs.
When the mode is changed to the spindle mode during the simple inclined surface machining, an operation error (M01 0186) occurs. An operation error (M01 0186) can be reset by NC reset.
When the simple inclined surface control modal is retained by resetting the modal retention (#1151 rstint = 0), an operation error (M01 0186) occurs at the timing of the next automatic operation start.
To reset the simple inclined surface control modal, issue the simple inclined surface control cancel command (G69.1) to the head (first block) of the machining program.

## Mixed control (cross axis control) I/II

You can perform simple inclined surface control (G176) or tool axis direction control (G53.1) by using the axis that was exchanged with mixed control I/II. However, if mixed control I is commanded to the part system in which the inclined surface machining command is active, a program error (P951) will occur. When mixed control II is enabled, an operation error (M01 1035) will occur.

### Control axis synchronization between part systems I/II

The reference axis of control axis synchronization between part systems I or II can be combined with the simple inclined surface machining command (G176) or the tool axis direction control command (G53.1). If the simple inclined surface machining command is issued to the part system that provides the synchronized axis of control axis synchronization between part systems I or II, a program error (P952) occurs.

## Precautions and restrictions

(1) During simple inclined surface control, simple tool center point control, or tool axis direction control, even if G00 non-interpolation is set, the axis moves linearly (interpolation type ) to the programmed position. (Parameter "#1086 G0Intp")

(2) Indirect interpolation type is applied regardless of the parameter setting. (Parameter "#7910 SLCT_INT_MODE")

(3) Make sure to specify the names of the three orthogonal axes set in the rotary axis configuration parameters ("#7900 RCDAX_I" to "#7902 RCDAX_K").

(4) When a tool is to be installed in the left-hand orthogonal coordinate system, the target rotation direction parameters ("#7923 DIR_T1", "#7933 DIR_T2", "#7943 DIR_W1", and "#7953 DIR_W2") must be set to CCW.

In case of the work-stationary-type tool tilt for the simple inclined surface machining, set "#7933" to CCW.

(5) When simple inclined surface control (G176) and simple tool center point control (G174) are used together, always command so that the start and cancel of simple inclined surface control are nested within the start and cancel of simple tool center point control start or cancel. If simple inclined surface control start or cancel is commanded during simple tool center point control, it causes a program error (P952).

| | | |
|---|---|---|
| (During simple inclined surface control) | G176 X_Z_D_;<br>: | Simple inclined surface machining control command |
| | G174 Rr;<br>:<br><br>(During simple tool center point control) | Simple tool center point control start |
| | G175; | Simple tool center point control cancel |
| | :<br>G69.1; | Simple inclined surface control cancel |

(6) During simple inclined surface control or simple tool center point control, SSS control is temporarily disabled.

(7) When the inclined surface modal is retained at resetting, the axis exchange status is also retained even if the parameter is set so as to cancel the mixed control (cross axis control) by the reset function.
If an axis of a part system in which simple inclined surface machining is being carried out is specified as the exchange target axis, axis exchange will not be possible and the operation error (M01 1101) will occur regardless of the automatic operation mode.

(8) Even if "#1247 set19/bit2" is set to "1" to retain modal information of the simple inclined surface control (G176) when the power is turned OFF, other modals are not retained. Reconfigure modal settings as needed.

(9) If the simple inclined surface control is performed during axis exchange when "#1247 set19/bit2" is set to "1" to retain modal information of the simple inclined surface at power OFF, the axis arrangement is initialized at power OFF, so modal information of the inclined surface at power OFF is not retained.

(10) While the high-speed machining mode and simple inclined surface control (G176) are ON, any axis not specified in the rotary axis configuration parameter can be commanded only in the G00 modal state. If the axis not specified in the rotary axis configuration parameter, is commanded when the G code modal of group 01 is other than G00, a program error (P951) occurs.

(11) When the high-accuracy control is enabled, the acceleration rate at rapid traverse (G00) in the simple inclined surface control (G176) mode or the simple tool center point control (G174) mode is the same as that at cutting feed (G01). (*1)

(*1) Acceleration rate determined by the parameters "#1206 G1bF" (maximum speed) and "#1207 G1btL" (time constant).

## 19.2.1 Simple Inclined Surface Control ; G176

### Function and purpose

Refer to "19.2 Simple Inclined Surface Machining".

### Command format

**Simple inclined surface control start**

| | |
|---|---|
| **G176 X_ Z_ D_;** | **Rotates K-I plane about the axis parallel to the J axis.** |

| | |
|---|---|
| **G176 X_ Y_ D_;** | **Rotates I-J plane about the axis parallel to the K axis.** |

| | |
|---|---|
| **G176 Y_ Z_ D_;** | **Rotates J-K plane about the axis parallel to the I axis.** |

| | |
|---|---|
| X/Y/Z | Feature coordinate system's zero point (Rotation center position) |
| D | Rotation angle |

**Note**

(1) The command is enabled when the G code system of the program is 2, 3, 4 or 5 (#1037 cmdtyp=3, 4, 5 or 6). If the command is issued while the G code system is other than 2, 3, 4 or 5, the program error (P34) occurs.

(2) The command belongs to G code group 16 modal.

(3) "G176" appears on the modal status screen during simple inclined surface control (G176).

(4) G176 must be commanded alone in a block. If any other G code is included in the G176 command block, the program error (P954) occurs.

(5) If G176 is issued during the G176 modal status, the program error (P951) occurs.

(6) If the addresses of the axis specified by the parameters "#7900 RCDAX_I", "#7901 RCDAX_J", or "#7902 RCDAX_K", or any other addresses than address D are commanded, the program error (P954) occurs.

(7) If the value of address D is outside the command range, the program error (P35) occurs.

**Simple inclined surface control cancel**

| |
|---|
| **G69.1 ;** |

**Note**

(1) G69.1 must be commanded alone in a block. When it is commanded in the same block with other G codes or travel commands, etc., a program error (P954) occurs.

(2) If a cancel command is issued during any modal state other than G176, the cancel command is ignored.

(3) G176 (single command) can also cancel the G176 modal status.

(4) When not in simple inclined surface control (G176), "G69.1" appears on the modal status screen.

## Detailed description

### Detailed address setting

| Address | Meaning | Command range (unit) | Remarks |
|---|---|---|---|
| X/Y/Z | Feature coordinate system's zero point (Rotation center position) | -99999.999 to 99999.999 (mm) | Specify the zero point of the feature coordinate system that is viewed from the workpiece coordinate system, using the coordinates of the two axes that configure the plane to rotate.<br>•Specify the position from the workpiece coordinate zero point using an absolute position.<br>•The zero point position for simple inclined surface control is specified with an absolute position, irrespective of G90/G91.<br>•Use a command address of the axis specified by the parameters "#7900 RCDAX_I", "#7901 RCDAX_J", or "#7902 RCDAX_K" for axis command.<br>•Use an absolute position name for axis command. A program error (P954) will occur if an incremental position is used.<br>•It is not possible to omit the rotation center coordinates.<br>•Whether to use a diameter or radius to specify the zero point of coordinate rotation depends on the MTB specifications (parameter "#1009 dia"). |
| D | Rotation angle | -359.999 to 359.999 (°) | Specify the angle by which to rotate the coordinate plane.<br>•Rotation angle (D) is always an absolute position, irrespective of G90 or G91.<br>•It is not possible to omit the rotation angle.<br>•If the rotation of the coordinate system is CCW when the rotation center is viewed from the positive direction of each rotation center axis, the rotation is regarded as positive. |

## Operation example

### Define the coordinate system after a workpiece coordinate system is rotated

This section describes operations when the following program is executed.

| | |
|---|---|
| G176 X100. Z80. D-30.; | (1) |
| G00 X100. Z50.; | (2) |
| G69.1(G176); | (3) |

(1) When G176 (start command) is executed, the feature coordinate system rotated by 30 degrees in the negative direction is set using the command position (X100., Z80.) on the workpiece coordinate as the zero point. At this time no axes move.

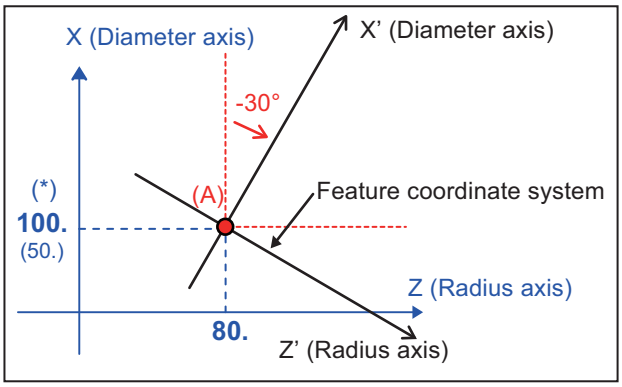


(*) The contents enclosed in parentheses ( ) indicate the value of the radius value command.

Whether to use a diameter or radius to specify the zero point of coordinate rotation (X/Y/Z) depends on the MTB specifications (parameter "#1009 dia").

For the rotation direction, refer to "Define the rotation direction by Simple inclined surface control (G176)".

After coordinate system rotation, the position programmed in G176 block serves as the rotation coordinate zero point. (Point (A) in the figure)

(2) During the simple inclined surface control mode, the machine position is calculated so that it will be relative to the feature coordinate system.

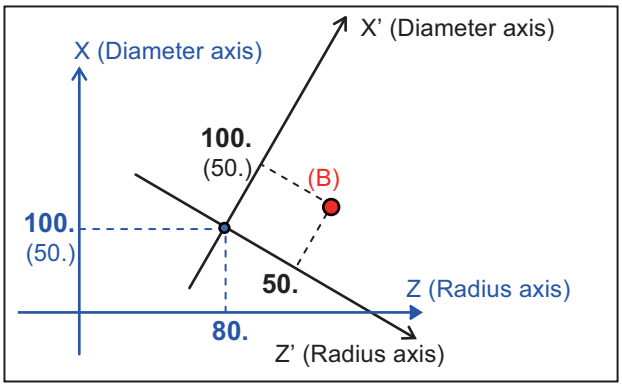


A position command given during the simple inclined surface control mode specifies a position in feature coordinate system.
(Point (B) in the left-side figure indicates the position (X100(50)., Z50.) on the feature coordinate system.)
If a travel command is given to a diameter designation axis during the simple inclined surface control mode, use a diameter value for the travel command.

(3) Use either G69.1 or G176 (single command) to cancel the simple inclined surface control modal status. At this time, no axes move, but the setting of the feature coordinate system is cancelled and the original workpiece coordinate system becomes active.

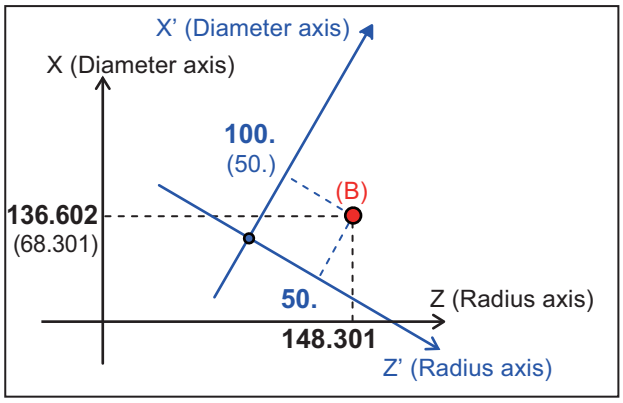


Point (B) in the left-side figure indicates the position (X136.602, Z148.301) on the workpiece coordinate system before rotation.

## Define the rotation direction by Simple inclined surface control (G176)

[When rotating ZX plane around J axis]

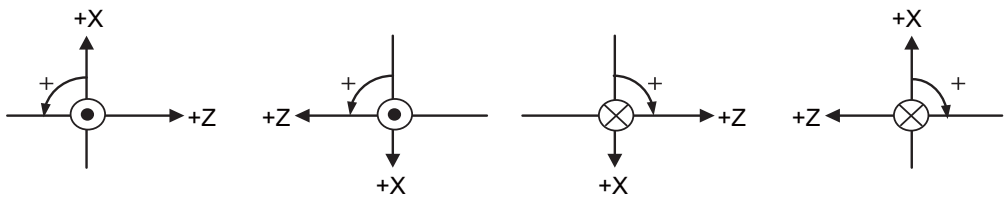


[When rotating XY plane around Z axis]

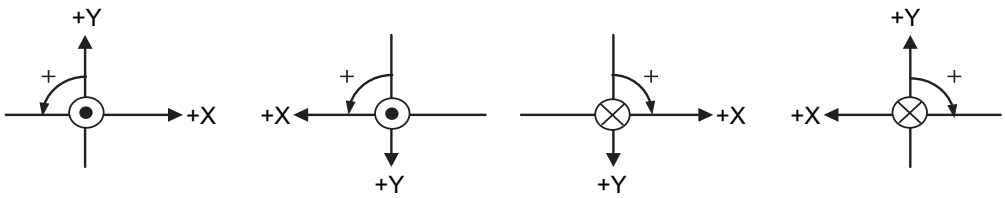


[When rotating YZ plane around X axis]

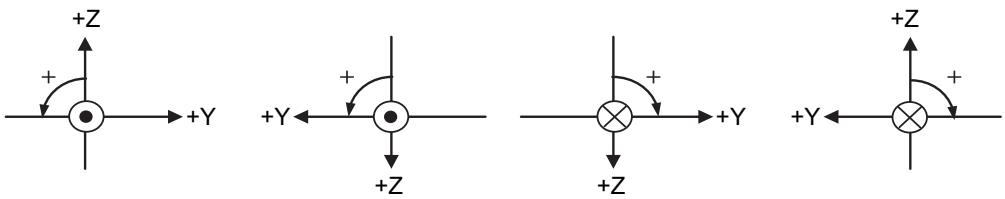


⊙ :The forward direction of the rotary axis is on the front side.

⊗ :The forward direction of the rotary axis is on the back side.

↷ :"D_" command direction

## Relationship with other functions

Refer to "19.2 Simple Inclined Surface Machining".

## 19.2.2 Simple Tool Center Point Control ; G174

### Function and purpose

Refer to "19.2 Simple Inclined Surface Machining".

### Command format

#### Simple tool center point control start

```
G174 R__ ;
```

| | |
|---|---|
| R | Tool axis rotation angle compensation amount |

**Note**

(1) The command is enabled when the G code system of the program is 2, 3, 4 or 5 (#1037 cmdtyp=3, 4, 5 or 6). If the command is issued while the G code system is other than 2, 3, 4 or 5, the program error (P34) occurs.

(2) The command belongs to G code group 8 modal.

(3) G174 appears on the modal status screen during simple tool center point control (G174).

(4) If G174 is issued without any tool compensation command (T code), the program error (P941) occurs.

(5) A G174 command issued during the G174 modal state is ignored.

(6) If an axis travel command is given along with G174, the command follows either the G00 or G01 modal state. It is possible to issue G00 or G01 in the same block.
However, if any travel command other than G00 and G01 is given, the program error (P941) occurs.

(7) If no axis travel command is given along with G174, the axes will not move (No startup operation). At the first axis travel command after G174, the startup operation is carried out.

(8) If an axis travel command is given simultaneously with G174, the tool moves so that the tool tip position coincides with the programmed position (Startup operation).

(9) Tool axis rotation angle compensation amount is able to be specified with the address R of the G174 block, while parameter "#1450 5axis_Spec/bit1" is 0 (Using G174 tool axis rotation angle as compensation amount). (This setting depends on the MTB specifications.)

(10) If the value of address R is outside the command range, a program error (P35) will occur.

#### Simple Tool Center Point Control Cancel

```
G175 ;
```

**Note**

(1) The command is enabled when the G code system of the program is 2, 3, 4 or 5 (#1037 cmdtyp=3, 4, 5 or 6). If the command is issued while the G code system is other than 2, 3, 4 or 5, the program error (P34) occurs.

(2) A G175 command issued during the G175 modal state is ignored.

(3) If an axis travel command is included in G175 block, a program error (P33) will occur.

(4) "G175" appears on the modal status screen when not in simple tool center point control (G174).

## Detailed description

### Detailed address setting

| Address | Meaning of address | Command range (unit) | Remarks |
|---|---|---|---|
| R | Tool axis rotation angle compensation amount | -359.999 to 359.999 (°) | Compensates the rotation angle reference position with respect to the tool-side rotary axis.<br>♦Use the address R to specify the tool offset angle relative to the Z axis (- direction) of the machine coordinate system.<br>For details, refer to "How to apply tool axis rotation angle compensation amount".<br>When parameter "#7933 DIR_T2" (rotation direction of the tool-side rotary axis) is "0", the CW direction is treated as positive. When this parameter is "1", the CCW direction is treated as positive. This setting depends on the MTB specifications.<br>♦Address R can be omitted. If address R is omitted, it will be handled as "R0.". |

### Start simple tool center point control (startup operation)

(1) When no axis travel command is included in the G174 command block
If no axis travel command is given along with G174, the axes will not move. If a first travel command is given after G174, the tool moves so that the tool tip coincides with the programmed position.

(2) When an axis travel command is included in the G174 command block
If a travel command is given along with G174, the tool moves so that the tool tip coincides with the programmed position.

| | **(1) When no axis travel command is included in the G174 command block** | **(2) When an axis travel command is included in the G174 command block** |
|---|---|---|
| | G00 X150. Y0. Z20. B-45.; | G174 X150. Y0. Z20. B-45.; |
| non-turret type | 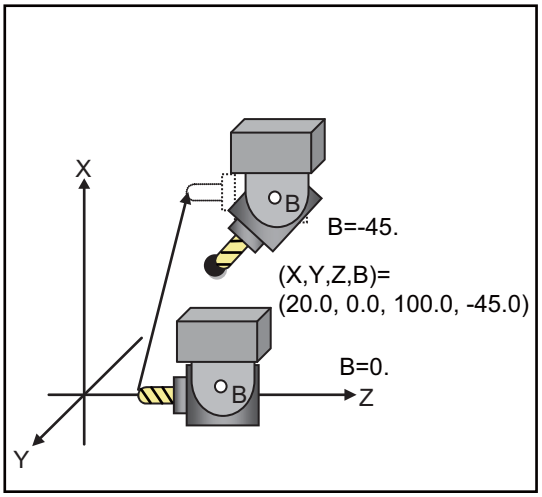 | 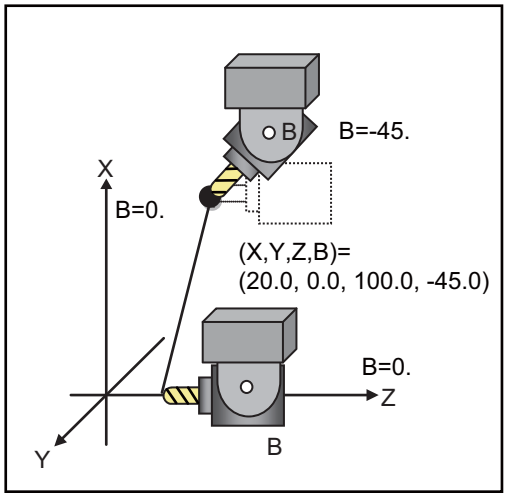 |
| Turret type | 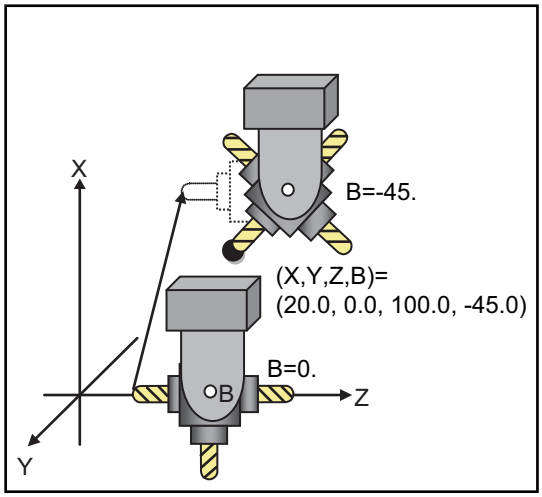 | 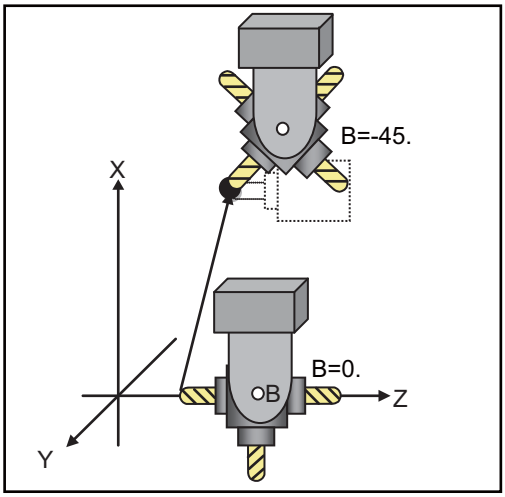 |

### Cancel operation

Cancel operation for the tool offset is not carried out as a result of the cancel command.

### Operation during the modal state

(1) When travel commands are given to orthogonal and rotary axes
The tool tip moves along the programmed path. (Refer to following figure.)

```
G174;
G0 X10. Y0. Z0. B-45.;
N100 G01 Z50. B0. F1000;
N200 Z100. B45.;
```

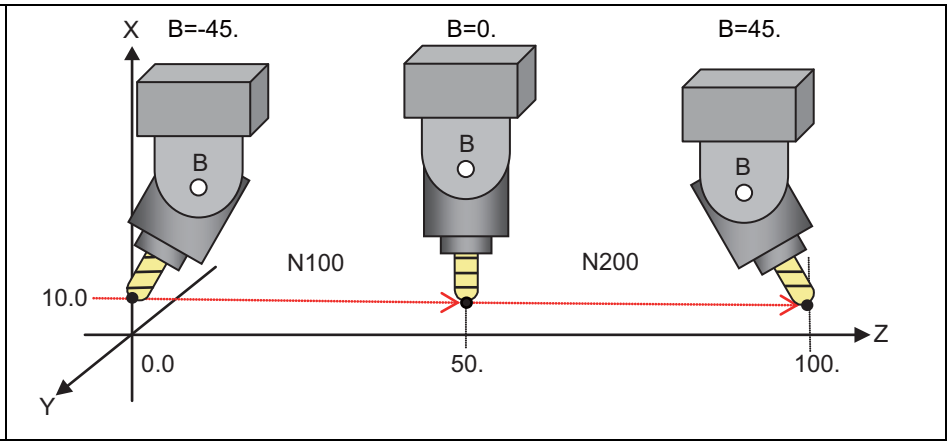


(2) When a travel command is given to a rotary axis only
The tool tip position does not move. The orthogonal axes are controlled so that the tool rotates around the tool tip position. (Refer to following figure.)

```
G174;
G0 X10. Y0. Z50. B60.;
N100 G01 B-60. F1000;
```

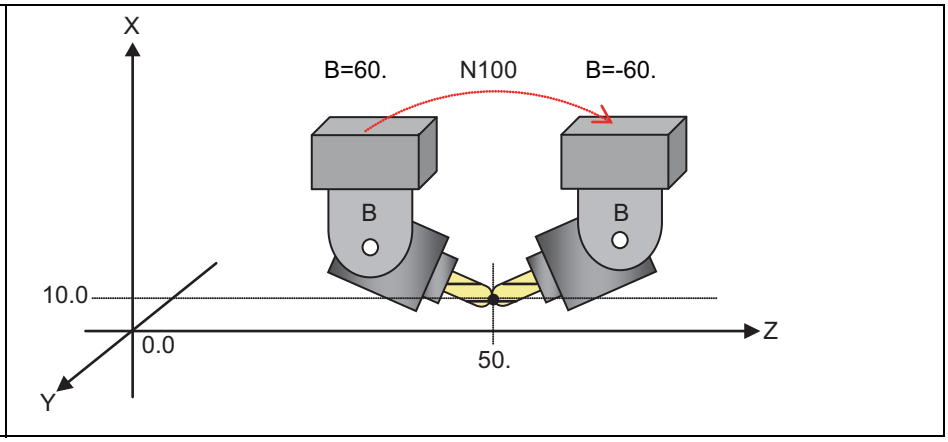


(3) If a travel command is given to any axis not specified for the rotary axis configuration parameters, the program error (P942) occurs.

### Feedrate during simple tool center point control

During simple tool center point control (G174), the feedrate is controlled so that the tool tip moves at a programmed speed.

### Operation of the axis not specified in the rotary axis configuration parameter

For axes not specified in the rotary axis configuration parameter, only one axis can be put in one block during the simple tool center point control (G174).

If two or more of the axes are put in one block, a program error (P942) occurs.

[Travel speed of the axis not specified in the rotary axis configuration parameter]

- When a single axis is commanded, processing is controlled so that the axis travels at the commanded speed.
- If the axis is commanded for the same block as for the three orthogonal axes (X, Y, and Z axes), interpolation is performed so that the tool tip position runs at the commanded speed. At this time, the speed is controlled not to exceed the clamp speed (or the rapid traverse rate) of each axis.

### How to apply tool axis rotation angle compensation amount

If you want to perform simple tool center point control (G174) or tool axis direction control (G53.1) using a tool that is not parallel to Z(-) of the machine coordinate system while the tool axis rotation angle is at 0 degree, the simple tool center point control (G174) or tool axis direction control (G53.1) can be implemented by specifying the tool axis rotation angle compensation amount (offset angle).
This is effective, for instance, when you use any tool mounted on a turret for machining.

There are two types of methods to apply the tool axis rotation angle compensation amount: "Offset angle designation method" and "Rotary axis position automatic-read method". The method is chosen depending on the MTB specifications (parameter "#1450 5axis_Spec/bit1").

(1) Offset angle designation method ("#1450 5axis_Spec/bit1" is 0)
There are two offset angle designation methods: program command method and PLC signal method.
- The program command method can be designated using the R address of the simple tool center point control (G174) or tool axis direction control (G53.1).
- The PLC signal method can be designated using the R register (TANGOFS :R2634 to R2635).

The offset angle can be designated using the total value of the angle specified in the program command method and that specified in the PLC signal method when the simple tool center point control (G174) or tool axis direction control (G53.1) is commanded.
The offset angle must be designated using the status in which the tool axis rotation angle is at 0 degree, as the standard.
Note that the offset angle varies depending on the tool rotary axis's rotation direction (*1).
When you use a tool of which the center point is in the X axis "-" direction of the machine coordinate system, the offset angle is set as follows:
- When the tool rotary axis's rotation direction is set to CW (#7933 DIR_T2 = 0), the offset angle is set to 270 degrees. (Refer to (A) in the following figure.)
- When the tool rotary axis's rotation direction is set to CCW (#7933 DIR_T2 = 1), the offset angle is set to 90 degrees. (Refer to (B) in the following figure.)

(*1) The rotation direction setting depends on the MTB specifications (parameter "#7933 DIR_T2").

When you use any tool with the hexagon turret, the offset angle is set as follows:
- When the tool rotary axis's rotation direction is set to CCW, the tool A's offset angle is set to 90 degrees. (Refer to (C) in the following figure.)
  For the R registers (R2634 to R2635), designate the reference tool's offset angle, 30 degrees (30000).
  For the R address of the G174/G53.1 command block, designate the offset angle 60 degrees (G176 R60./G53.1 R60.) from the standard tool.
- The offset angle can be designated using only either the R address in the G174/G53.1 command block or the R register (R2634 to R2635). In this case, set 0 degree (0) to the one that is not selected.

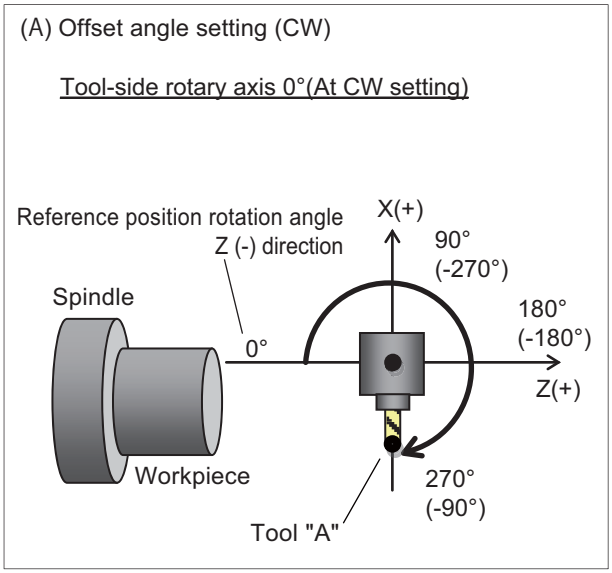


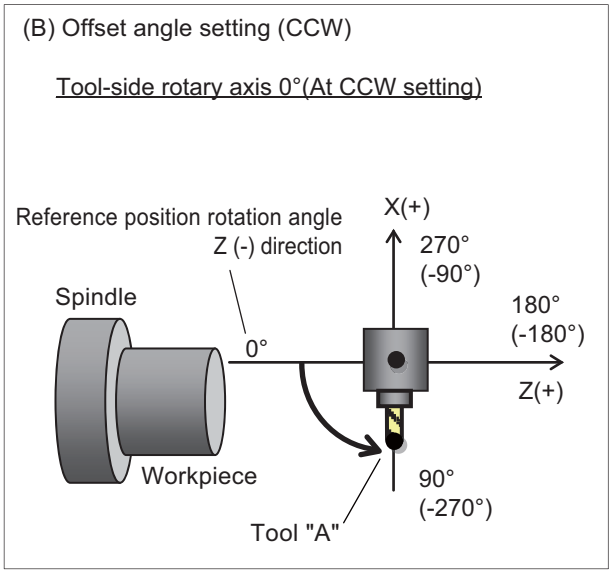


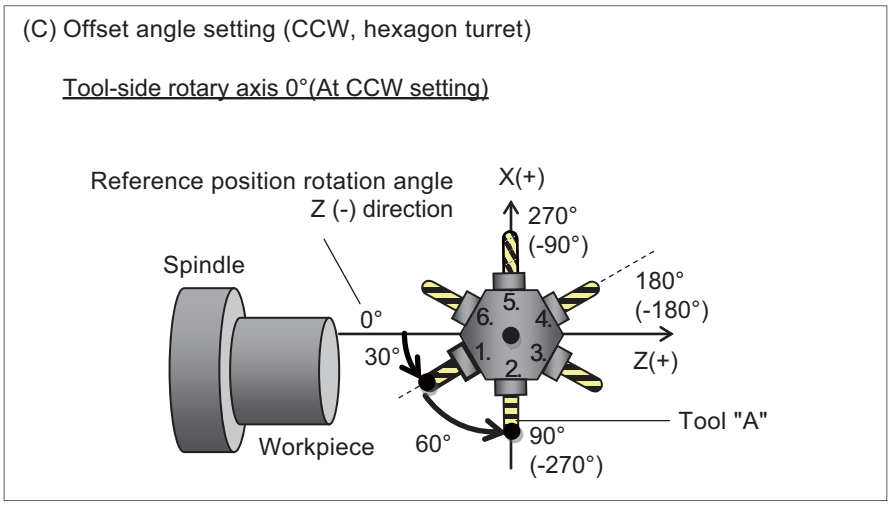


<Note>

- In the R address of the G174/G53.1 block and R register, specify the tool angle relative to the reference position rotation angle when the tool axis rotation angle is at 0 degree. Thus, even when the tool axis rotation angle rotates and the tool axis rotation angle of the target tool is not at 0 degree, make sure to designate the offset angle at which the tool axis rotation angle is at 0 degree, for the tool axis rotation angel compensation amount.

(2) Rotary axis position automatic-read method ("#1450 5axis_Spec/bit1" is "1")
The tool-side rotary axis position at the command of simple tool center point control (G174) or tool axis direction control (G53.1) is treated as the tool axis rotation angle compensation amount.
Direct the tool you use toward the reference position rotation angle (Z(-) of the machine coordinate system) before issuing a G174/G53.1 command.

(Example) If you use a tool (Tool "A") that is at 90 (-270) degrees relative to the reference position rotation angle while "#7933 DIR_T2" is "1" (CCW direction), use the following machining program.

| | |
|---|---|
| T1010 ; | |
| G00 X0. Z0. B90. | Direct the tool (Tool "A") toward the Z (-) direction of machine coordinate system (Refer to following figure.) |
| G92 B0. | Coordinate system setting |
| G174 ; | Simple tool center point control is started. |
| G01 X100. B45. F1000 ; | |
| : | |
| G175 ; | Simple tool center point control cancel |

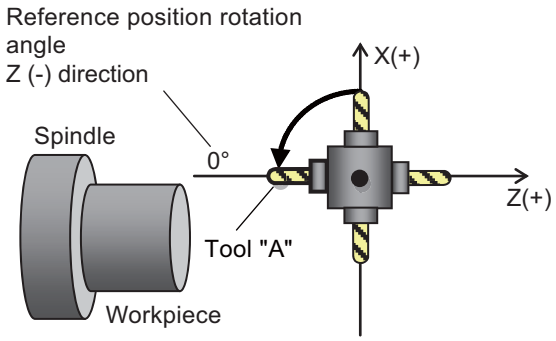


Rotate the target tool by the reference position rotation angle, then issue G174/G53.1 command.

<Note>

- If you execute the simple tool center point control (G174) after canceling the tool center point control modal (G174) or the tool axis direction control (G53.1), rotate the target tool up to the "reference position rotation angle" again before the simple tool center point control (G174) or the tool axis direction control (G53.1).

## 19.2.3 Tool Axis Direction Control ; G53.1

### Function and purpose

A rotary axis is automatically moved so that the tool axis direction (direction from the tool's tip to the bottom) will match the +Z axis direction of the feature coordinate system.

### Command format

| **G53.1 R__ ;** | |
|---|---|
| R | Tool axis rotation angle compensation amount |

**Note**

(1) Command the tool axis direction control (G53.1) during the simple inclined surface control (G176) modal. If the command is issued in a modal other than the simple inclined surface control (G176) modal, the program error (P953) occurs.

(2) The tool axis direction control (G53.1) must be commanded alone in a block. When it is commanded in the same block with other G codes or travel commands, etc., a program error (P953) occurs.

(3) If the tool axis direction control (G53.1) is issued without any tool compensation command (T code), the program error (P953) occurs.

(4) If the tool axis direction control (G53.1) is commanded while the tool compensation amount of the orthogonal coordinate height axis (#7902 RCDAX_K) is set to "0", the program error (P957) occurs.

(5) If the tool axis direction cannot be set to the +Z direction of the feature coordinate system by the rotation direction of the feature coordinate system, the program error (P958) occurs.
For example, if the feature coordinate system is turned around the I axis (G176 Y0. Z0. D45.) when the rotation axis is set to the J axis rotation (#7930 SLCT_T2 = 2), the tool axis direction cannot be set to the +Z direction of the feature coordinate system by the rotation of the rotary axis.

(6) If any address other than the R address is commanded when the tool axis direction control (G53.1) is commanded, a program error (P957) occurs.

(7) If an invalid value is designated to the R address at the tool axis direction control (G53.1) command, a program error (P35) occurs.

(8) If the tool axis rotation angle compensation amount application method is set to the rotary axis position automatic-read method ("#1450 5axis_Spec/bit1" = 1), the R address is ignored when the tool axis direction control (G53.1) is commanded.

(9) The travel speed with the tool axis direction control (G53.1) command follows the G group 1 modal during the tool axis direction control command.

## Detailed description

### Detailed address setting

| Address | Meaning of address | Command range (unit) | Remarks |
|---|---|---|---|
| R | Tool axis rotation angle compensation amount | -359.999 to 359.999 (°) | Compensates the rotation angle reference position with respect to the tool-side rotary axis.<br>♦Use the address R to specify the tool offset angle relative to the Z axis (- direction) of the machine coordinate system.<br>When parameter "#7933 DIR_T2" (rotation direction of the tool-side rotary axis) is "0", the CW direction is treated as positive. When this parameter is "1", the CCW direction is treated as positive. This setting depends on the MTB specifications.<br>♦Address R can be omitted. If address R is omitted, it will be handled as "R0.". |

### Details of operation

For the tool axis direction control (G53.1) command, the 3 orthogonal axes (X, Y, and Z axes) do not move, however, only the rotary axes rotate so that the tool axis direction is in line with the +Z direction of the feature coordinate system.

**Note**

(1) Depending on the feature coordinate system setting, rotary axis may move greatly when the tool axis direction control (G53.1) is commanded. Thus, before commanding the tool axis direction control (G53.1), move the tool far enough away from the table.

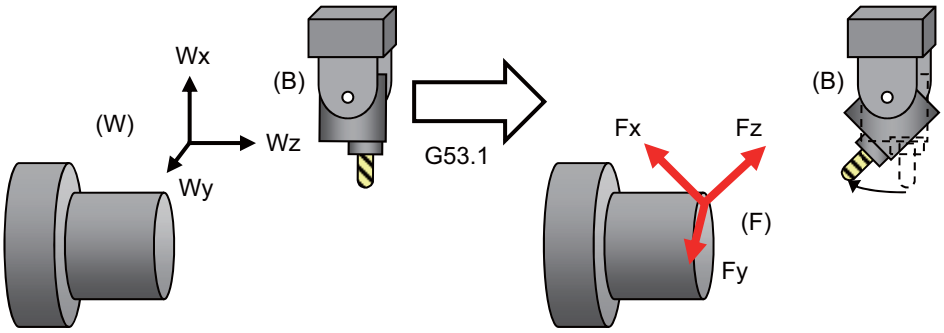


(W): Workpiece coordinates
(F): Feature coordinates
(B): B axis

# 19.3 Rotation Center Error Compensation (Precautions for Creating a Machining Program)

## Function and purpose

In the machine having a rotary axis, the rotation center deviates due to the assembly error of the rotary axis. Thus, if a machining is carried out with the rotary axis, the machining accuracy is impaired because an error is caused in the relative position between the tool and workpiece.

There are two types of rotation center deviation. One is "position deviation", in which the rotation center is shifted in the planar direction, and the other is "angle deviation", in which the rotation center inclines.

Higher-accuracy machining is realized by compensating for these two types of deviation.

If the option for this function is not set, the operation error (M01 0240) is output, and compensation is not performed.

[Position deviation and angular deviation]

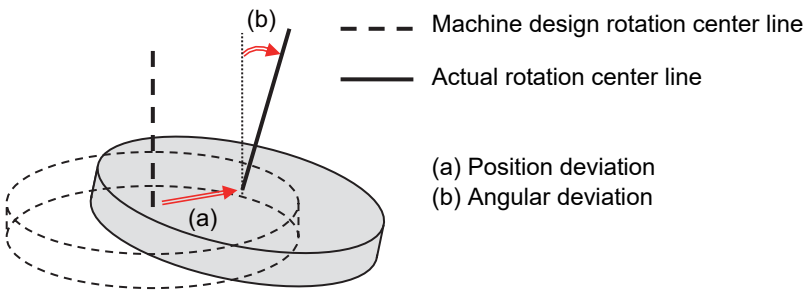


[Compensation for deviation of center of rotation]

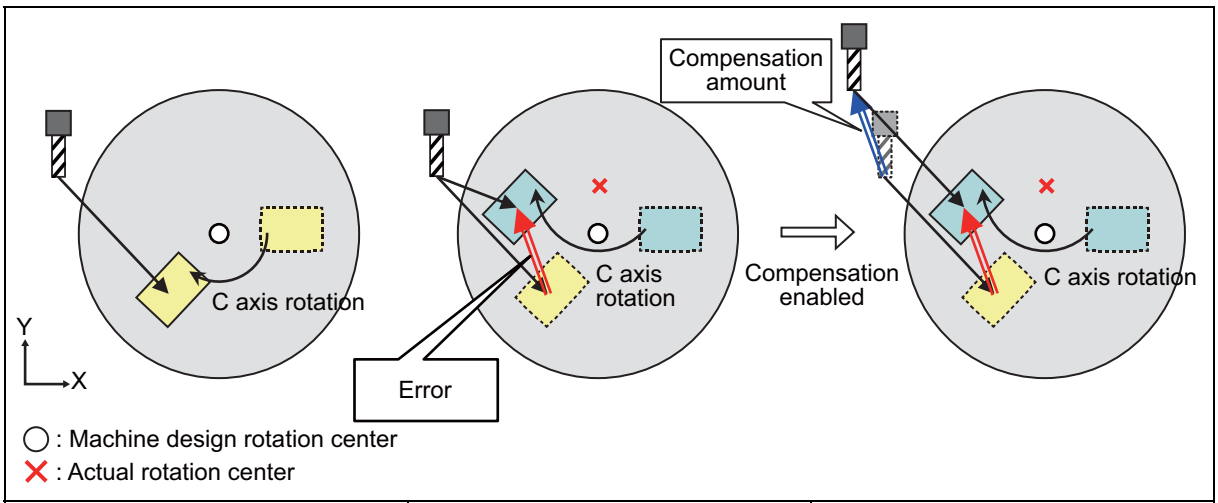


| [No deviation] | [With deviation]<br>The error arises between tool and workpiece; accuracy decreases | [When this function is enabled]<br>The error between the tool and workpiece is compensated for by using the measured deviation (parameter). |
|---|---|---|

## Detailed description

The position deviation and angular deviation between the actual center line of rotation and the center line of rotation on the machine design lead to a lower machining accuracy at the cutting point. By setting the position deviation and angular deviation to be compensated beforehand, high machining accuracy is achieved as if these centers of rotation were coincided.

### Position deviation compensation

Due to position deviation, an error arises between the position rotated around the design center of rotation and the position rotated around the actual center of rotation (see the figure in item (a)). This error is compensated for by distributing the compensation amount of this error to the orthogonal axes. This enables cutting to be carried out based on the position rotated at the actual rotation center position (see the figure in item (b)).

(a) Error when there is position deviation of C axis

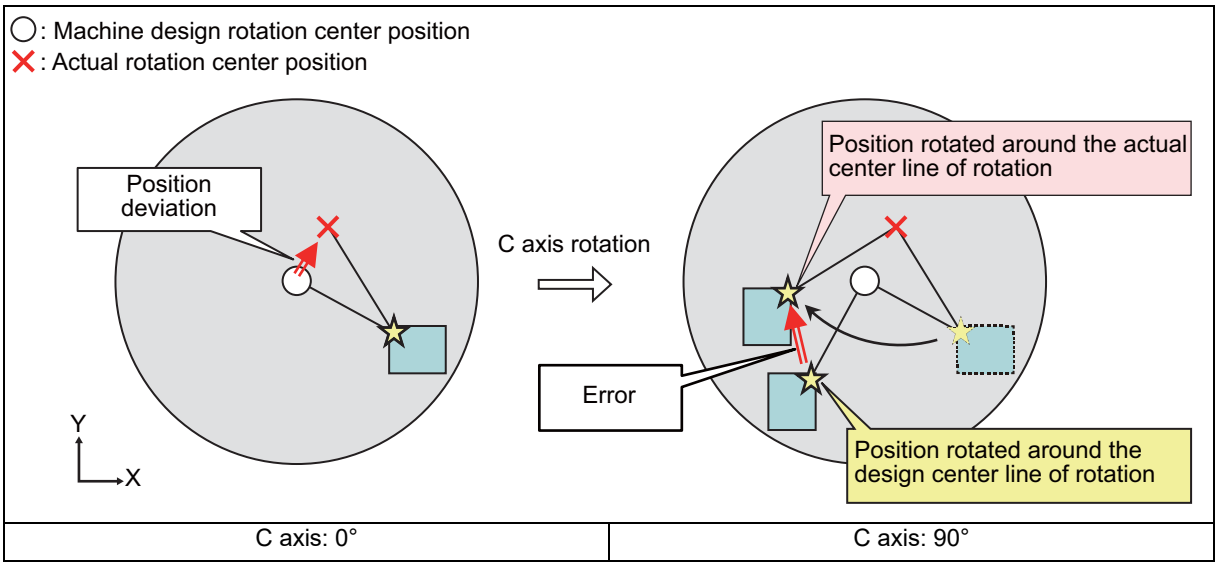


(b) Compensation for position deviation when C axis is 90°

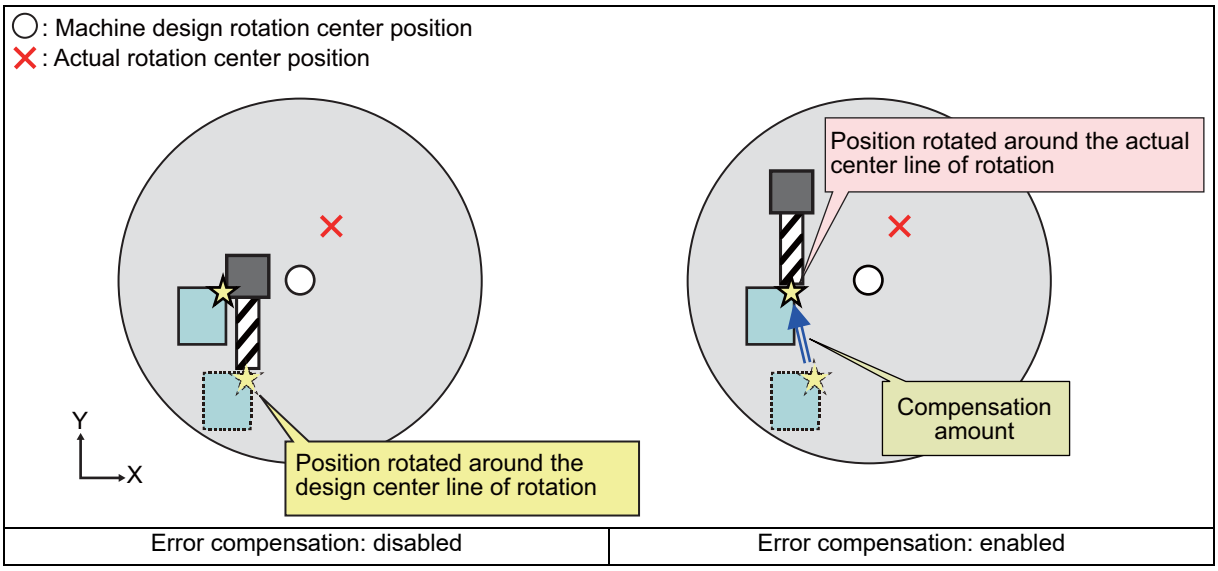

### Angular deviation compensation

Due to angular deviation, an error arises between the position rotated around the machine design center of rotation and the position rotated around the actual center of rotation (see the figure in item (a)). This error is compensated by distributing the compensation amount of this error among the orthogonal axes and rotary axes. This enables cutting to be done based on the position rotated around the actual center of rotation. Whether compensation amount is distributed to rotary axes or not depends on the MTB specifications (the parameter "#7916 ROT_ERR_MODE" (Rotation center error compensation method)) (see the figure in item (b)).

The compensation amount for angular deviation varies depending on the position of the cutting point. By setting the tool length, the tool center point can be corrected. The tool length data to be applied differ between M system and L system (see the table below). If no tool length is set, the compensation amount at the position of the machine end face is applied.

| Operation mode | Machine | Tool length data to be applied |
|---|---|---|
| Automatic operation | M system | Tool length data specified in tool length offset (G43/G44), tool length compensation along the tool axis (G43.1), or tool center point control (G43.4/G43.5) |
| | L system | Tool length data specified in T command (tool offset) |
| Manual operation | M system/L system | The tool length data set in the parameter "#8043 Tool HDL FD OFS" |

(a) When there is angular deviation of C axis

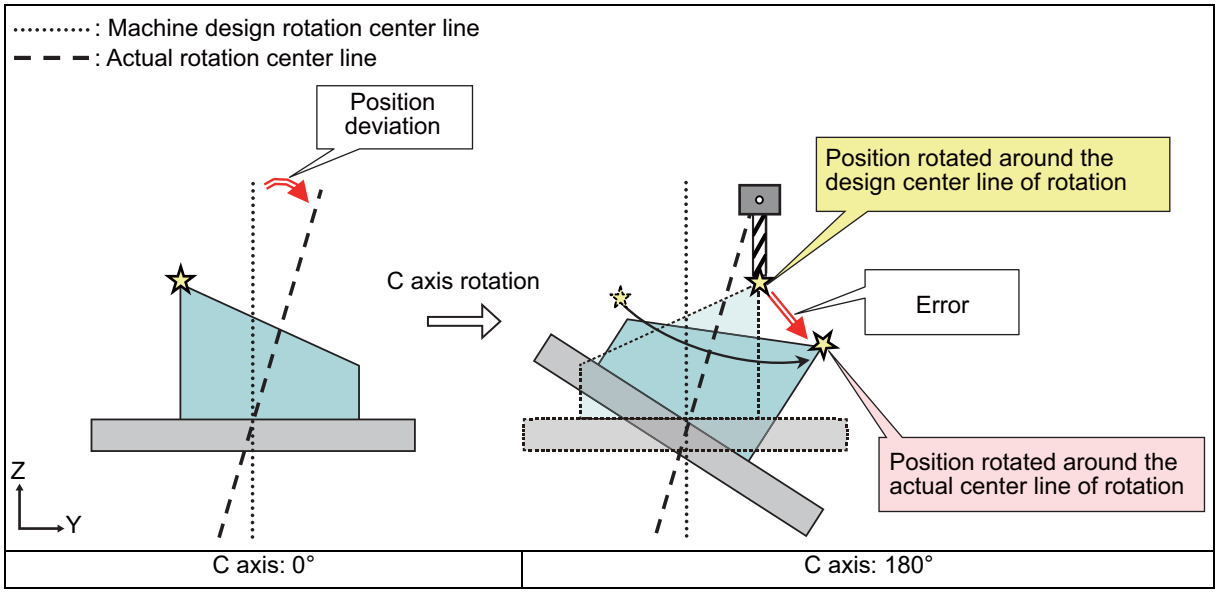


(b) Compensation for angular deviation when C axis is 180°

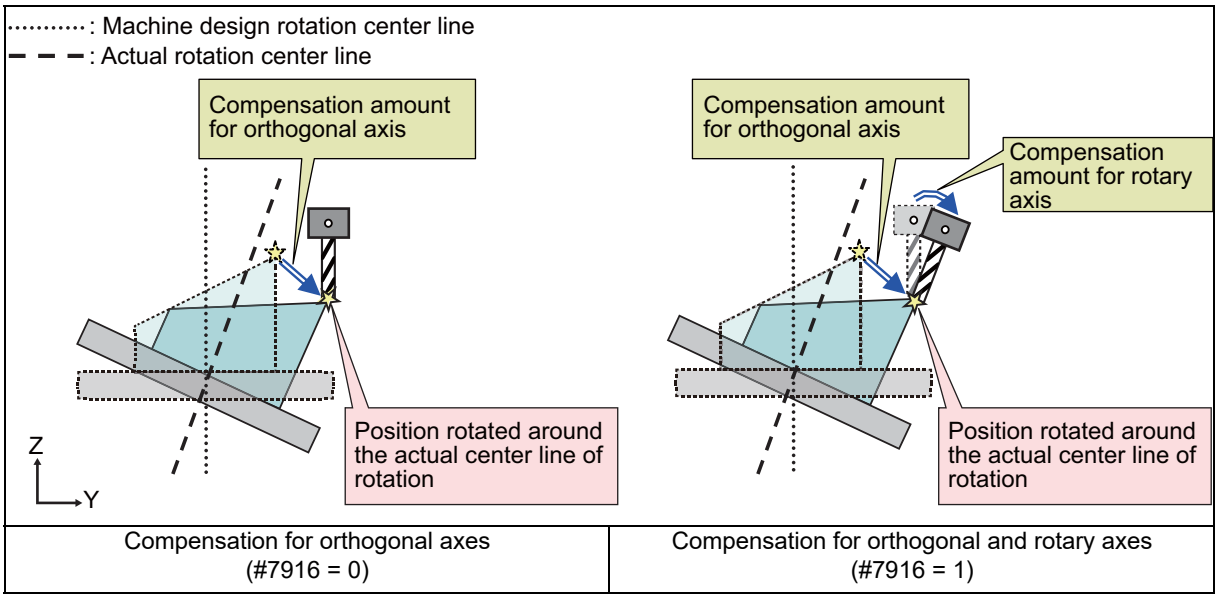

## Relationship with other functions

When the additional functions in the table below are commanded during rotation center error compensation, the operation depends on the MTB specifications (parameter "#1450 5axis_Spec/bit5").

- "#1450 5axis_Spec/bit5" (0: Machine movement is suppressed. 1: Machine movement is not suppressed.)
- "#1280 ext16/bit1" (Mixed control (cross axis control) cancel with reset)
- "#1280 ext16/bit3" (Reset operation for synchronization/superimposition control)

| Additional function | "#1450/bit5" setting value | Operation to be performed when the following function is commanded during rotation center error compensation | | | Angular deviation compensation for superimposed axis or synchronized axis |
|---|---|---|---|---|---|
| | | Operation of the function on the left | | Operation to be performed when the function on the left is commanded | |
| | | At emergency stop | When resetting | | |
| Mixed control (Arbitrary axis exchange control) (G140) | 0 | Not canceled | Not canceled (*1) | (a) When commanded: Program error (P501)<br>(b) When the axis exchange in the part system is commanded (*2): Operation error (M01 1101) | - |
| | 1 | Canceled | Depends on "#1280 ext16/bit1". | Can be commanded. (*3) | - |
| Mixed control I/II (Cross axis control) (G110) | 0 | Not canceled | Not canceled (*1) | (a) When the G command issued: Program error (P501)<br>(b) When a command by the PLC signal is issued: Operation error (M01 1035) | - |
| | 1 | Canceled | Depends on "#1280 ext16/bit1". | Can be commanded. (*3) | - |
| Control axis superimposition (G126) | 0 | Canceled | Not canceled (*1) | (a) When the G command issued: Program error (P520)<br>(b) When a command by the PLC signal is issued: Operation error (M01 1004) | Disabled (*4)<br>Operation error (M01 1003) |
| | 1 | Canceled | Depends on "#1280 ext16/bit3". | Can be commanded. (*5) | Enabled (*6) |
| Arbitrary axis superimposition (G156) | 0 | Canceled | Not canceled (*1) | Program error (P520) | Disabled (*4)<br>Operation error (M01 1003) |
| | 1 | Canceled | Depends on "#1280 ext16/bit3". | Can be commanded. (*5) | Enabled (*6) |
| Control axis synchronization between part systems I/II (G125) | 0 | Canceled | Not canceled (*1) | (a) When the G command issued: Program error (P521)<br>(b) When a command by the PLC signal is issued: Operation error (M01 1037) | Disabled (*4)<br>Operation error (M01 1038) |
| | 1 | Canceled | Depends on "#1280 ext16/bit3". | Can be commanded. (*3) | Enabled (*6) |

(*1) This does not depend on the setting of the parameter "#1280 ext16/bit1" or "#1280 ext16/bit3".

(*2) This means a case in which the axis in the part system during rotation center error compensation is designated as the replacement axis.

(*3) The command can be issued, however, machine movement may occur. To ensure safety, issue the command at a 0 degree angle to the rotary axis.

(*4) If angle deviation compensation is commanded to the superimposed axis or synchronized axis, an operation error will occur. This alarm can be reset by turning the "Rotation center error compensation ON" signal (RCEE) OFF.

(*5) The error compensation amount is immediately applied to the superimposed axis or synchronized axis, so machine movement may occur. To ensure safety, issue the command at a 0 degree angle to the rotary axis.

(*6) The angle deviation compensation can be commanded to the superimposed axis or synchronized axis, however, the rotation center error compensation amount of the superimposed axis or synchronized axis is not applied to the reference axis. Therefore, the relative positional relationship between the reference axis and the superimposed axis may be broken. To ensure safety, issue the command at a 0 degree angle to the rotary axis.

**Note**

(1) If the relative positional relationship between the reference axis and the superimposed axis may be broken or machine movement may occur, issue the command at a 0 degree angle to the rotary axis to ensure safety.

# 20

# Coordinate System Setting Functions

# 20.1 Coordinate Words and Control Axes

## Function and purpose

In the case of a lathe, axis names (coordinate words) and directions are defined as follows.

The axis at right angles to the spindle
Axis name: X axis

The axis parallel to the spindle
Axis name: Z axis

### Coordinate axes and polarities

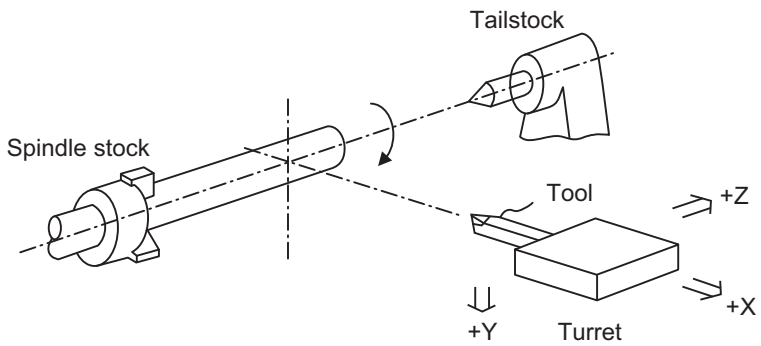


Since coordinates based on the right hand rule are used with a lathe, in the above figure, the positive direction of the Y axis which is at right angles to the X-Z plane is downward.
Note that a circular on the X-Z plane is expressed as clockwise or counterclockwise as seen from the forward direction of the Y axis.
(Refer to "Circular Interpolation; G02, G03".)

**Relationship between coordinates**

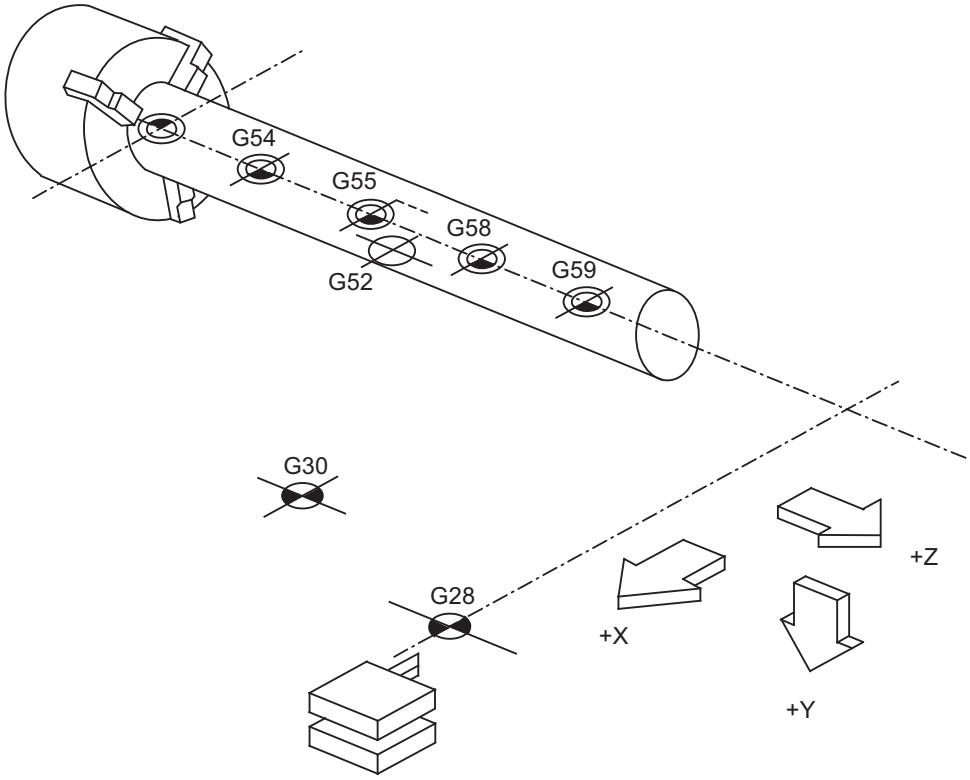


Reference position

Basic machine coordinate

Workpiece coordinate zero point

Local coordinate zero point

# 20.2 Types of Coordinate Systems

## 20.2.1 Basic Machine, Workpiece and Local Coordinate Systems

### Function and purpose

The basic machine coordinate system is fixed in the machine and it denotes that position which is determined inherently by the machine.
The workpiece coordinate systems are used for programming and in these systems the basic point on the workpiece is set as the coordinate zero point.
The local coordinate systems are created on the workpiece coordinate systems and they are designed to facilitate the programs for parts machining.
Upon completion of the reference position return, the basic machine coordinate system and workpiece coordinate systems (G54 to G59) are automatically set with reference to the parameters.
The basic machine coordinate system is set so that the first reference position is brought to the position specified by the parameter from the basic machine coordinate zero point (machine zero point).

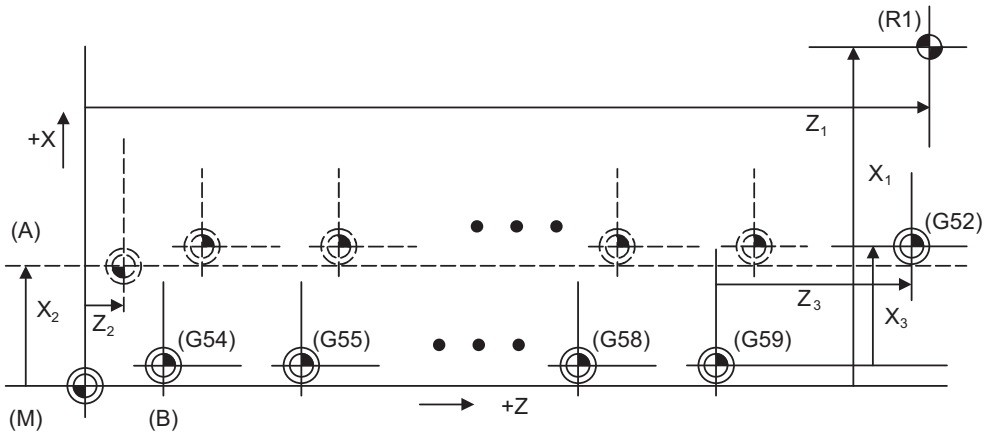


(A) Hypothetical machine coordinate system (G92 shift)
(B) Machine zero point
(G54) Workpiece coordinate system 1
(G55) Workpiece coordinate system 2
(G58) Workpiece coordinate system 5
(G59) Workpiece coordinate system 6
(G52) Local coordinate system
(R1) 1st reference position
(M) Basic machine coordinate system

The local coordinate systems (G52) are valid on the coordinate systems designated by workpiece coordinate systems 1 to 6.
The hypothetical machine coordinate system can be set on the basic machine coordinate system using a G92 command. At this time, the workpiece coordinate system 1 to 6 is also simultaneously shifted.

Also refer to "Coordinate Systems and Coordinate Zero Point symbols".

## 20.2.2 Machine Zero Point and 2nd Reference Position (Zero point)

### Function and purpose

The machine zero point serves as the reference for the basic machine coordinate system. It is inherent to the machine and is determined by the reference (zero) point return.
2nd reference position (zero point) relates to the position of the coordinates which have been set beforehand by parameter from the zero point of the basic machine coordinate system.

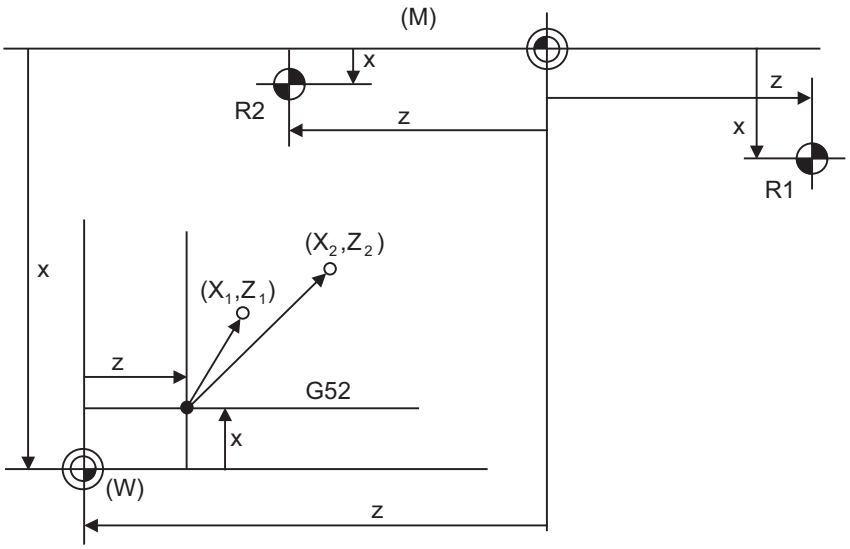


(M) Basic machine coordinate system
(G52) Local coordinate system
(W) Workpiece coordinate systems (G54 to G59)
(R1) 1st reference position
(R2) 2nd reference position

## 20.2.3 Automatic Coordinate System Setting

### Function and purpose

This function creates each coordinate system according to the parameter values input beforehand from the setting and display unit when the first manual reference position return or the reference position is reached with the dog-type reference position return when the NC power is turned ON.
The actual machining program is programmed over the coordinate systems which have been set above.

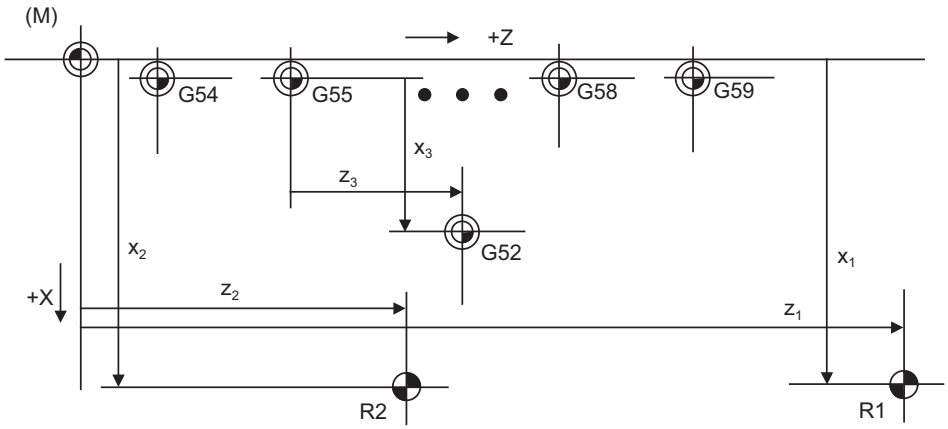


(M) Basic machine coordinate system
(G52) Local coordinate system
(G54) Workpiece coordinate system 1
(G55) Workpiece coordinate system 2
(G58) Workpiece coordinate system 5
(G59) Workpiece coordinate system 6
(R1) 1st reference position
(R2) 2nd reference position

### Detailed description

(1) The coordinate systems created by this function are as follow:
- Basic machine coordinate system
- Workpiece coordinate systems (G54 to G59)

(2) The parameters related to the coordinate system all provide the distance from the zero point of the basic machine coordinate system. Therefore, after deciding at which position the first reference position should be set in the basic machine coordinate system and then set the zero point positions of the workpiece coordinate systems.

(3) When the automatic coordinate system setting function is executed, shifting of the workpiece coordinate system with G92, setting of the local coordinate system with G52, shifting of the workpiece coordinate system with origin set, and shifting of the workpiece coordinate system with manual interrupt will be canceled.

(4) The dog-type reference position return will be executed when the first time manual reference position return or the first time automatic reference position return is executed after the power has been turned ON. It will be also executed when the dog-type is selected by the parameter for the manual reference position return or the automatic reference position return for the second time onwards.

**⚠ CAUTION**

**⚠ If the workpiece coordinate offset amount is changed during automatic operation (including during single block operation), it will be validated from the next block or after multiple blocks of the command.**

## 20.2.4 Coordinate System for Rotary Axis

### Function and purpose

The axis designated as the rotary axis with the parameters is controlled with the rotary axis' coordinate system.
The rotary axis includes the rotating type (short-cut valid/invalid) and linear type (workpiece coordinate position linear type and all coordinate position linear type).
The workpiece coordinate position range is 0 to 359.999° for the rotating type, and 0 to ± 99999.999° for the linear type.
The machine coordinate value and relative position differ according to the parameters.
The rotary axis is commanded with a degree (°) unit regardless of the inch or metric designation.
The rotary axis type can be set with the parameter "#8213 rotation axis type" for each axis.

| | **Rotary axis** | | | | **Linear axis** |
|---|---|---|---|---|---|
| | **Rotating type rotary axis** | | **Linear type rotary axis** | | |
| | **Short-cut invalid** | **Short-cut valid** | **Workpiece coordinate position linear type** | **All-coordinate position linear type** | |
| **#8213 setting value** | **0** | **1** | **2** | **3** | **-** |
| **Workpiece coordinate position** | Displayed in the range of 0° to 359.999°. | | Displayed in the range of 0° to ± 99999.999°. | | |
| **Machine coordinate position/ relative position** | Displayed in the range of 0° to 359.999°. | | | Displayed in the range of 0° to ± 99999.999°. | |
| **ABS command** | The incremental amount from the end point to the current position is divided by 360 degrees, and the axis moves by the remainder amount according to the sign. | Moves with a short-cut to the end point. | In the same manner as the normal linear axis, it moves according to the sign by the amount obtained by subtracting the current position from the end point (without rounding up to 360 degrees). | | |
| **INC command** | Moves in the direction of the commanded sign by the commanded incremental amount starting at the current position. | | | | |
| **Reference position return** | Depends on the absolute command or the incremental command during the movement to the intermediate point. | | | | |
| | Returns with movement within 360 degrees. | | | Moves and returns in the R point direction for the difference from the current position to the R point. | |

## Operation example

Examples of differences in the operation and counter displays according to the type of rotation coordinate are given below.
(The workpiece offset is set as 0°.)

### Rotary type (short-cut invalid)

(1) The machine coordinate position, workpiece coordinate position and relative position are displayed in the range of 0° to 359.999°.

(2) For the absolute command, the axis moves according to the sign by the remainder amount obtained by dividing by 360°.

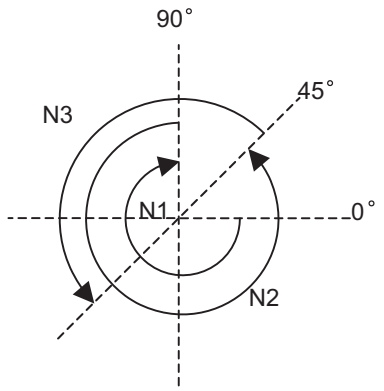


| Program | Workpiece | Machine |
|---|---|---|
| G28 C0. | | |
| N1 G90 C-270. | 90.000 | 90.000 |
| N2 C405. | 45.000 | 45.000 |
| N3 G91 C180. | 225.000 | 225.000 |

### Rotary type (short-cut valid)

(1) The machine coordinate position, workpiece coordinate position and relative position are displayed in the range of 0° to 359.999°.

(2) For the absolute command, the axis rotates to the direction having less amount of movement to the end point.

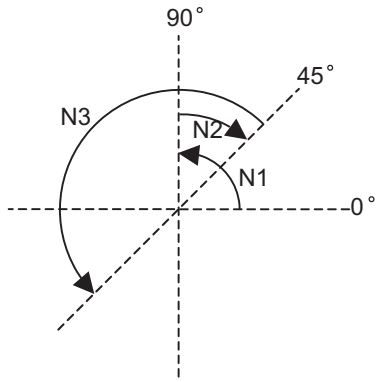


| Program | Workpiece | Machine |
|---|---|---|
| G28 C0. | | |
| N1 G90 C-270. | 90.000 | 90.000 |
| N2 C405. | 45.000 | 45.000 |
| N3 G91 C180. | 225.000 | 225.000 |

### Linear type (workpiece coordinate position linear type)

(1) The coordinate position counter other than the workpiece coordinate position is displayed in the range of 0° to 359.999°.
The workpiece coordinate position is displayed in the range of 0 to ±99999.999°.

(2) The movement is the same as the linear axis.

(3) During reference position return, the axis moves in the same manner as the linear axis until the intermediate point is reached. The axis returns with a rotation within 360° from the intermediate point to the reference position.

(4) During absolute position detection, even if the workpiece coordinate position is not within the range of 0 to 359.999°, the system will start up in the range of 0 to 359.999° when the power is turned ON again.

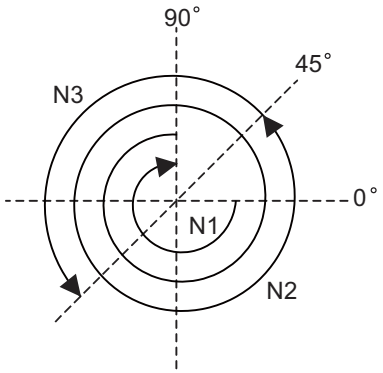


| Program | Workpiece | Machine | Relative position |
|---|---|---|---|
| G28 C0. | | | |
| N1 G90 C-270. | -270.000 | 90.000 | 90.000 |
| N2 C405. | 405.000 | 45.000 | 45.000 |
| N3 G91 C180. | 585.000 | 225.000 | 225.000 |
| | After the power is turned ON again | | |
| | **Workpiece** | **Machine** | |
| | 225.000 | 225.000 | |

### Linear type (all coordinate position linear type)

(1) The workpiece coordinate position counter is displayed in the range of 0 to ±99999.999°.

(2) The movement is the same as the linear axis.

(3) During reference position return, the axis moves in the same manner as the linear axis until the intermediate point is reached.
The axis rotates by the difference from the intermediate point to the reference position and returns to the reference position.

(4) During absolute position detection, the system starts up at the position where the power was turned OFF when the power is turned ON again.

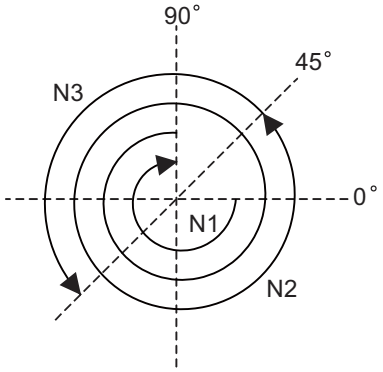


| Program | Workpiece | Machine | Relative position |
|---|---|---|---|
| G28 C0. | | | |
| N1 G90 C-270. | -270.000 | -270.000 | -270.000 |
| N2 C405. | 405.000 | 405.000 | 405.000 |
| N3 G91 C180. | 585.000 | 585.000 | 585.000 |
| | After the power is turned ON again | | |
| | **Workpiece** | **Machine** | |
| | 585.000 | 585.000 | |

# 20.3 Basic Machine Coordinate System Selection; G53

## Function and purpose

The tool is moved to the position commanded on the basic machine coordinate system with the G53 command and feed mode command (G01 or G00) and the coordinate command that follows them.

## Command format

```
G53 G00 X__ Z__ α__;
```

```
G53 G00 U__ W__ β__;
```

| | |
|---|---|
| α | Additional axis |
| β | Incremental command of the additional axis |

## Detailed description

(1) When the power is turned ON, the basic machine coordinate system is automatically set as referenced to the reference position (zero point) return position, which is determined by the automatic or manual reference position (zero point) return.

(2) The basic machine coordinate system is not changed by the G92 command.

(3) The G53 command is valid only in the designated block.

(4) When an incremental command is issued (U, W, β), the axis will move with the incremental position within the selected coordinate system.

(5) The 1st reference coordinate position indicates the distance from the basic machine coordinate system zero point to the reference position (zero point) return position.

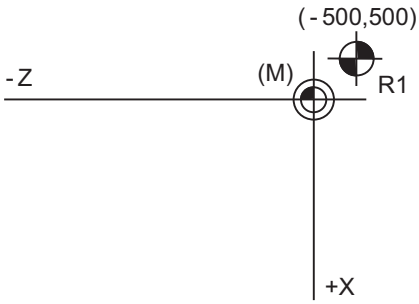


(M) Basic machine coordinate system
(R1) 1st reference position

1st reference position coordinate value: X=-500 and Z=+500

(6) The G53 command will move with cutting feed or rapid traverse following command modal.

(7) If the G53 command and G28 command (reference position return) are issued in the same block, the command issued last will be valid.

(8) Depending on the MTB specifications, all movement commands in the G53 command block may run in rapid traverse mode (parameter "#1253 set/bit5").

(a) When the movement method of the G53 command block follows the command modal

[Example in which the G53 block is executed during G01 modal]

| Program | G group 01 modal | Cutting or Rapid traverse |
|---|---|---|
| N01 G01 X100. Z100. F1000; | G01 | Cutting |
| N02 G53 X200. Z200.; | G01 | Cutting |
| N03 X300. Z300.; | G01 | Cutting |

[Example in which the G53 block is executed during G00 modal]

| Program | G group 01 modal | Cutting or Rapid traverse |
|---|---|---|
| N01 G00 X100. Z100.; | G00 | Rapid traverse |
| N02 G53 X200. Z200.; | G00 | Rapid traverse |
| N03 X300. Z300.; | G00 | Rapid traverse |

(b) When all the movement methods of the G53 command block are set to rapid traverse

[Example in which the G53 block is executed during G01 modal]

| Program | G group 01 modal | Cutting or Rapid traverse |
|---|---|---|
| N01 G01 X100. Z100. F1000; | G01 | Cutting |
| N02 G53 X200. Z200.; | G01 | Rapid traverse |
| N03 X300. Z300.; | G01 | Cutting |

The G group 01 modal does not change in the G53 command block; only the operation is set to rapid traverse.

## Relationship with other functions

(1) Milling interpolation
When the G53 command is issued in the compensation mode, the compensation vectors are temporarily eliminated and then, compensation mode will automatically return.
In this case, the compensation is not canceled, and the tool goes directly from the intersection point vector to the point without vectors, in other words, to the programmed command point. When returning to the compensation mode, it goes directly to the intersection point.

(2) Tool compensation functions
When the G53 command is issued, the tool compensation amount of the axis with the movement command designated is canceled temporarily.

(3) Nose R compensation
When the compensation direction is reversed during nose R compensation, a program error (P157) will occur except when it is commanded in G00 block. Even if directions differ between before and after the G53 block, an error will not occur because compensation is temporarily canceled. A parameter can be set to move the tool in the same compensation direction.

(4) Fixed cycle for turning machining
The group modal of fixed cycle for turning machining will be canceled by the G53 command.

(5) Mirror image for facing tool posts
Mirror image for facing tool posts will be invalidated during the movement of G53. Mirror image for facing tool posts will be validated from the next block.

(6) Machine coordinate system selection, Feedrate designation
If an ",F" command is issued when there are no specifications of the feedrate command for G53, a program error (P39) occurs.

(7) Polar coordinate interpolation
Do not issue the G53 command during the polar coordinate interpolation mode.

(8) High-speed high-accuracy control
If the G53 command is issued during the high-speed high-accuracy control II mode, a program error occurs.

(9) 3-dimensional coordinate conversion
Coordinate conversion will not be carried out for the machine coordinate system even if G53 command is issued in the 3-dimensional coordinate conversion modal.

## Precautions

(1) In the machine with the specifications in which all the movement commands of the G53 command block run in rapid traverse mode, if the G53 and G01 commands are issued in the same block, the block is set to rapid traverse. However, the G group 01 modal is switched; therefore, the movement commands in the next and subsequent blocks run in cutting feed mode.
[Example in which the G53 and G01 commands are issued in the same block]

| Program | G group 01 modal | Cutting or Rapid traverse |
|---|---|---|
| N01 G00 X100. Z100.; | G00 | Rapid traverse |
| N02 G53 G01 X200. Z200. F1000; | G01 | Rapid traverse |
| N03 X300. Z300.; | G01 | Cutting |

(2) The travel amount of G53 block will be analyzed after the movement by the previous block is completed. Therefore, the update of the coordinate counter such as the "next command" or "remaining command" may not follow the actual movement.

# 20.4 Coordinate System Setting; G92

## Function and purpose

The zero point position of the program coordinate system can be shifted to an arbitrary position by G92 command.

This coordinate system is set so that, basically, the zero point is located in the center of the workpiece for the X and Y axes and located in the end face of the workpiece for the Z axis.

## Command format

```
G92 X__ Z__ α__ ;
```

| | |
|---|---|
| α | Additional axis |

## Detailed description

As shown in the figure below, when a coordinate system setting is specified by G92, G92 shift amount is applied so that the tool position in the current workpiece coordinate system (*1) is set to the coordinate position specified by G92, and the workpiece coordinate system is shifted accordingly. All the workpiece coordinate systems (G54 to G59 and G54.1 Pn) are also shifted simultaneously at this time, but the machine does not move.

(*1) The "tool position in the current workpiece coordinate system" includes the compensation amounts for nose radius and tool length offset.

Coordinate system created by automatic coordinate system setting

Coordinate system after coordinate system setting by G92

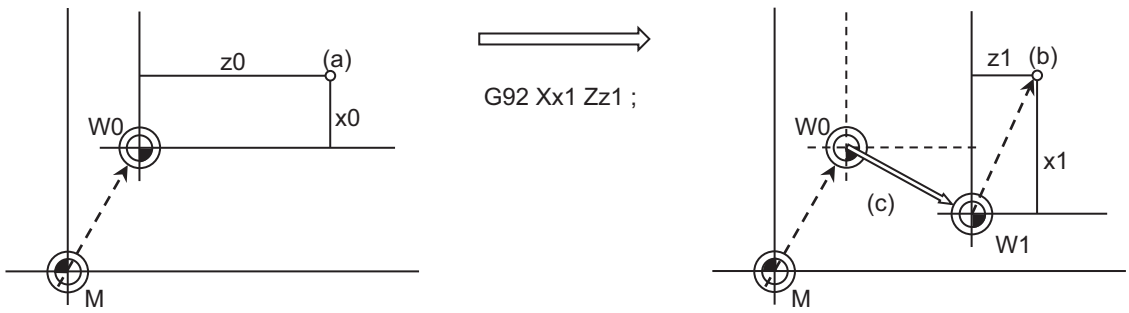


A workpiece coordinate system in which the current tool position is set at (x1, z1) will be newly created.

(a) Tool position
(b) G92 commanded position
(c) G92 shift amount
(W0) Workpiece coordinate system
(W1) Workpiece coordinate system after G92 command
(M) Basic machine coordinate system

The following values are set as G92 shift amounts.
X: x0 - x1
Z: z0 - z1

There are two methods to return a shifted coordinate system to its original position.

(1) Carry out dog-type reference position return.

(2) Move the coordinate system to the machine coordinate system zero point, then command G92 and G53 in the same block to set the machine coordinate system.

| | |
|---|---|
| G90 G53 G00 X0 Z0 ; | Positioning at machine coordinate system zero point |
| G92 G53 X0 Z0 ; | Coordinate system zero setting in machine coordinate system<br>This returns all the workpiece coordinates (G54 to G59 and G54.1 Pn) to their original positions |

### Precautions

(1) If the parameter "#1279 ext15/bit5" is set to "1", the coordinate systems setting (G92) shift amount is cleared when the axis reaches to the manual reference position.

(2) When G92 is commanded with "S" or "Q", the spindle clamp rotation speed is set. (Refer to "10.3 Spindle Clamp Speed Setting; G92".)

(3) For the "G92 G53" command, do not specify a value other than "0" for the axis address. When a command other than "0" is specified, the operation depends on the setting of "#1751 cfgPR01/bit4".

When "#1751 cfgPR01/bit4" is set to "0", the program error (P35) occurs.

When "#1751 cfgPR01/bit4" is set to "1", the operation is performed assuming that "0" is commanded to the axis address.

# 20.5 Local Coordinate System Setting; G52

## Function and purpose

The local coordinate systems can be set on the G54 through G59 workpiece coordinate systems using the G52 command so that the commanded position serves as the programmed zero point.
The G52 command can also be used instead of the G92 command to change the deviation between the zero point in the machining program and the machining workpiece zero point.

## Command format

```
G54 (or G55 to G59) G52  X__  Z__ ;
```

## Detailed description

(1) When G52 is commanded with the absolute mode (X,Z), command position on the workpiece coordinate system being selected is determined as the zero point of local workpiece coordinate system. To cancel the local coordinate system, command "G52 X0 Y0 Z0 α0;".
When G52 is commanded with the incremental mode (U,W), the zero point of the local workpiece coordinate system shifts by the commanded amount.

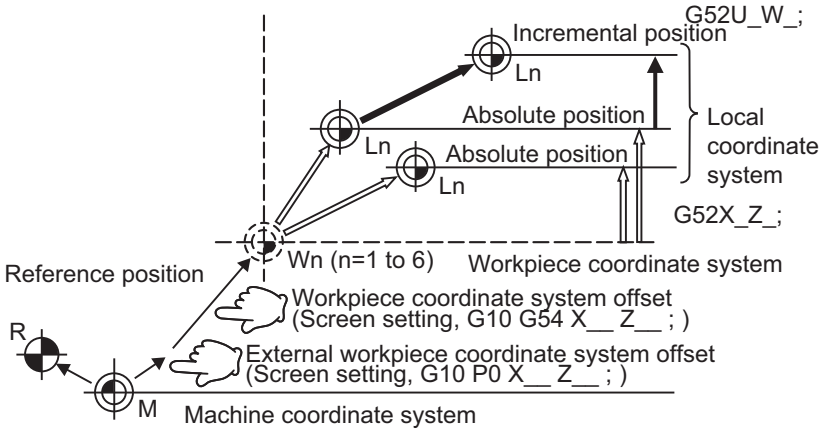


(2) The G52 command is valid until a new G52 command is issued. In the G52 command block, no movement is performed. This command, G52, comes in handy for employing another coordinate system without changing the zero point positions of the workpiece coordinate systems (G54 to G59).

(3) The local coordinate system offset will be cleared when the dog-type reference position return is carried out or the power is turned ON again.

<Note>

- If the program is executed repeatedly, the workpiece coordinate system will deviate each time. Thus, when the program is completed, the reference position return operation must be commanded.

# 20.6 Workpiece Coordinate System Selection and Extended Workpiece Coordinate System Selection; G54 to G59, G54.1

## Function and purpose

The workpiece coordinate systems facilitate the programming on the workpiece, serving the reference position of the machining workpiece as the zero point.

These commands enable the tool to move to the positions in the workpiece coordinate system. There are extended workpiece coordinate systems (G54.1) in addition to six workpiece coordinate systems, which are used by the programmer for programming (G54 to G59). The number of the extended workpiece coordinate systems varies depending on the MTB specifications.

### Workpiece coordinate system

| | |
|---|---|
| **G54 - G59 ;** | **Workpiece coordinate system selection** |

### Extended workpiece coordinate system

| | |
|---|---|
| **G54.1 Pn ;** | **Extended workpiece coordinate system selection (P1 to P48) (*1)** |

| | |
|---|---|
| **G54 Pn ;** | **Extended workpiece coordinate system selection (P1 to P48) (*1)**<br>**(It is valid when the parameter "#1274 ext10/bit5" is "1".)** |

(*1) The maximum number of coordinate systems depends on the specifications.

**Note**

(1) Address "P" cannot be omitted in the G54.1 command.

### Detailed description

(1) Even if the switching of the workpiece coordinate system is commanded using G54 to G59 or G54.1Pn, the nose R compensation amount and tool length offset amount are not canceled.

(2) The G54 workpiece coordinate system is selected when the power is turned ON.

(3) G54 through G59 and G54.1Pn commands are modal commands (group 12).

(4) The position of the workpiece coordinate system can be specified in [Coord] on the setup screen. For the offset amount, specify the distance from the basic machine coordinate system zero point to the workpiece coordinate system zero point.

(5) If G92 is commanded, all the workpiece coordinate systems (G54 to G59) and the extended workpiece coordinate system (G54.1 Pn) shift in addition to the currently selected workpiece coordinate system and the extended workpiece coordinate system.

(6) When the first automatic (G28) or manual reference position (zero point) return is completed after the power has been turned ON, the basic machine coordinate system and workpiece coordinate systems are set automatically in accordance with the parameter settings.

(7) Do not command a G code for which a P code is used in the same block as G54.1. If such a G code is commanded, a P code is used for a prior G command or the program error occurs (P33).

(8) Extended workpiece coordinate system selection (G54.1) and the number of workpieces depend on the MTB specifications. When unavailable commands are executed, the program error (P39) occurs.

(9) The local coordinate system for the G54 to G59 commands is independently set on each workpiece coordinate system; however, only a single local coordinate system is set to the "G54.1 (G54) Pn" command.
Even if the extended workpiece coordinate system number 1 to 48 is changed, the local coordinate system offset amount is inherited.
However, if the G52 command is executed during the "G54.1 (G54) Pn" command modal while the CNC of C80 series or the CNC of earlier version than the M800/M80/E80 series S/W version D4 is used, a program error (P438) occurs.

(10) The workpiece coordinate system offset amount and the extended workpiece coordinate system offset amount can be specified by the G10 L2/L20 command and the variable command.
For details, refer to the following chapters.
- 15.7.3 Compensation Data Input by Program (Workpiece Offset Amount) ; G10 L2/L20, G11
- 23.8 System Variables (Workpiece Coordinate Offset)
- 23.9 System Variables (Extended Workpiece Coordinate Offset)

**⚠ CAUTION**

**⚠ If the workpiece coordinate system offset amount is changed during single block stop, the new setting will be valid from the next block.**

(11) When the "#1151 rstint" parameter is set to "0", the modal of G54.1 command will be retained even if the reset 1 is carried out.

(12) Address "P" cannot be omitted in the G54.1 command.
Address "P" can be omitted in the G54 command; however, the standard workpiece coordinate system (G54) is selected regardless of the parameter "#1274 ext10/bit5".

(13) The P address of the G54.1 command cannot be commanded alone even in G54.1 modal. Even if commanded, the designated extended workpiece coordinate system cannot be selected.

(Example)

| | |
|---|---|
| P54.1 P5 ; | Changed to P5 workpiece coordinate system. |
| P3 ; | Ignored. |

### Program example

(Example 1)

(1) G28 X0. Z0.;
(2) G00 G53 X0. Z0.;
(3) G54 X-500. Z-500.;
(4) G01 W-500. F100;
(5) U-500.;
(6) W+500.;
(7) U+500.;
(8) G00 G55 X0. Z0.;
(9) G01 Z-500. F200;
(10) X-500. Z0.;
(11) G28 X0. Z0.;

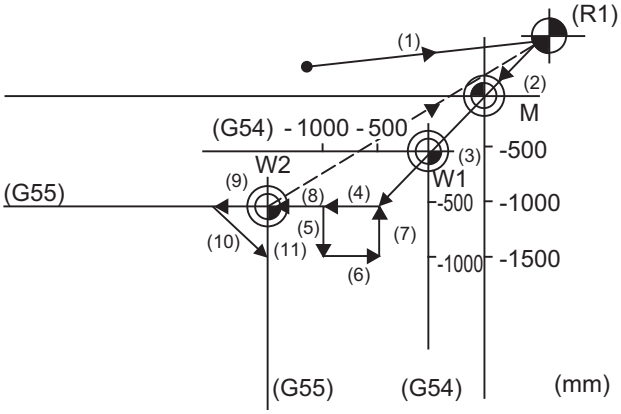

# 20.7 Workpiece Coordinate System Shift; G10 L10 P0

## Function and purpose

This function allows you to shift the workpiece coordinate system.
There may be a case in which the workpiece coordinate system assumed when the machining program is created does not match the coordinate system that is actually programmed or programmed by the automatic coordinate system setting. The function allows you to machine parts without changing the machining program by shifting from the measured coordinate system to the coordinate system that is assumed when the program is created. (In the figure below, amount of shift from O' to O is specified as the workpiece coordinate system shift amount.)
In addition, workpieces can be machined using the same program even if their shapes are changed.

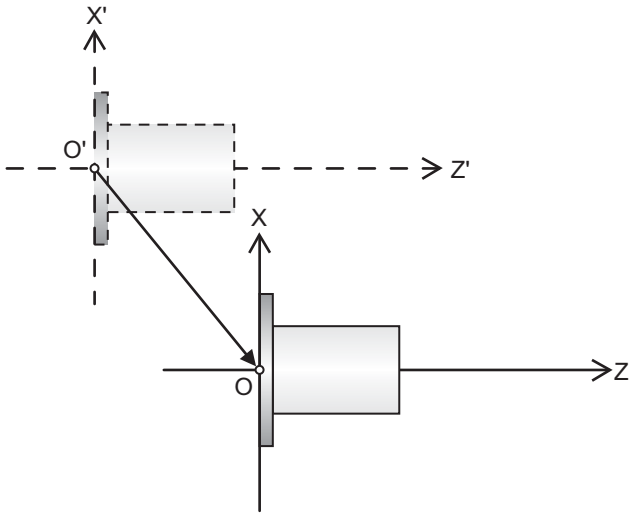


X' - Z' : Measured coordinate system
X - Z : Coordinate system established when the program is created

The validity of the functions depends on the MTB specifications.
This can be programmed via the screen. However, this section describes how to program them in a machining program.

## Command format

**G10 P0 X__ (U__) Z__ (W__); ... Input of workpiece coordinate system shift amount (no L command)**

**G10 L10 P0 X__ (U__) Z__ (W__); ... Input of workpiece coordinate system shift amount (L10)**

| | |
|---|---|
| X | X axis compensation amount (absolute) |
| U | X axis compensation amount (incremental) |
| Z | Z axis compensation amount (absolute) |
| W | Z axis compensation amount (incremental) |

(1) The G10 command is unmodal. When executing the G10 command continuously, it must always be command for each block separately.

(2) X, Z and U, W can be programmed in one block when using G10. When an address that commands the same compensation input (X,U or Z, W) is commanded, the address which is input last is valid.

(Example) When "G10 P0 Z10. W50" is executed, the workpiece shift amount for Z axis is set to "50.0".

(3) If "G10 P0" is commanded when the workpiece coordinate system shift is invalid, it is input as an external workpiece offset.

(4) If "G10 L10 P0" is commanded when the workpiece coordinate system shift is invalid, the program error (P170) occurs.

(5) When the workpiece coordinate offset measurement specifications are effective, you can automatically set the measured workpiece shift amount, rather than manually input workpiece coordinate system shift amount. Refer to the "Instruction Manual" for details on the measuring method.

## Relation with other functions

(1) If the external workpiece coordinate offset has been set, the amount of workpiece coordinate system shift from the external workpiece offset position is set.

(2) If parameter "#8716 Ext" (Workpiece coordinate system shift share) is set to "1", the display of the external workpiece coordinate offset changes to the workpiece coordinate system shift amount. The validity of this parameter depends on the MTB specifications. (Parameter "#11056 Work shift invld")

# 20.8 Workpiece Coordinate System Preset; G92.1

## Function and purpose

This function presets the workpiece coordinate system shifted with the program command during manual operation to the workpiece coordinate system offset from the machine zero point by the workpiece coordinate offset amount by the program command G92.1 (G50.3).
The workpiece coordinate system, which is set when the following type of operation or program command is executed, will be shifted from the machine coordinate system.

- When manual interrupt is executed while manual absolute is OFF
- When movement command is issued in machine lock state
- When axis is moved with handle interrupt
- When operation is carried out with mirror image
- When local coordinate system is set with G52
- Shifting the workpiece coordinate system with G92

This function presets the shifted workpiece coordinate system to the workpiece coordinate system offset from the machine zero point by the workpiece coordinate offset amount. This takes place in the same manner as manual reference position return. Whether to preset the relative coordinate depends on the MTB specifications (parameter "#1228 aux12/bit6").

## Command format

| |
|---|
| **G92.1 X0. Y0. Z0. α0;**<br>**(G50.3)** |

| | |
|---|---|
| α0 | Additional axis |

(1) Command the address of the axis to be preset. The axis will not be preset unless commanded.
(2) A program error (P35) will occur if a value other than "0" is commanded.
(3) Depending on the G code list, the G code will be "G50.3".
(4) G92.1 (G53) must be commanded alone in a block.
(5) Whether to conduct an error check when the coordinate system preset command (G92.1 or G50.3) is issued alone in a block depends on the MTB specifications (parameter "#1242 set14/bit1").

## Detailed description

(1) When the manual operation is carried out when the manual absolute is set to OFF, or if the axis is moved with handle interrupt.

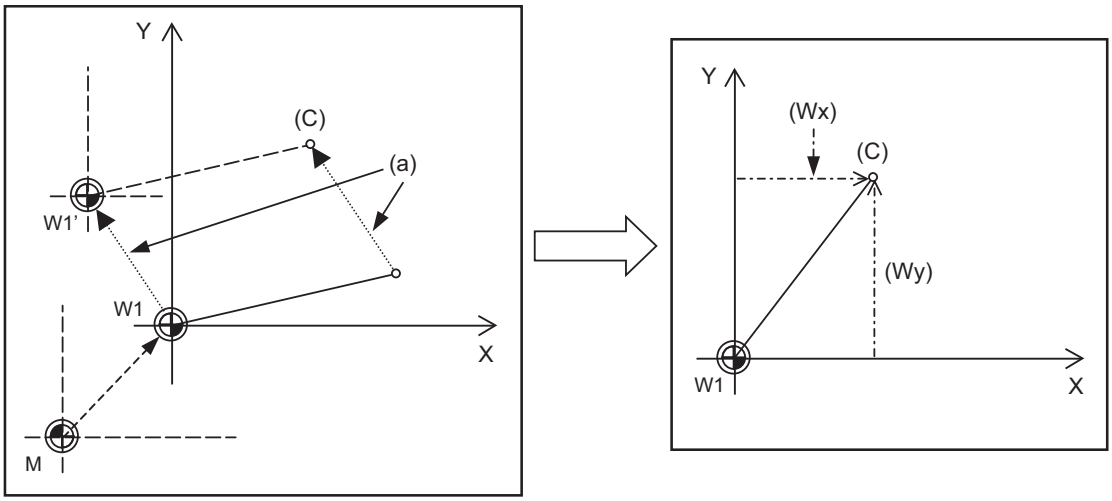


(a) Manual movement amount
(C) Current position
(Wx) (Wy) Workpiece coordinate (x, y) after preset

If manual operation is carried out when manual absolute is set to OFF, or if the axis is moved with handle interrupt, the workpiece coordinate system will be shifted by the manual movement amount.
This function returns the shifted workpiece coordinate zero point W1' to the original workpiece coordinate zero point W1, and sets the distance from W1 to the current position as the workpiece coordinate system's current position.

(2) When movement command is issued in machine lock state

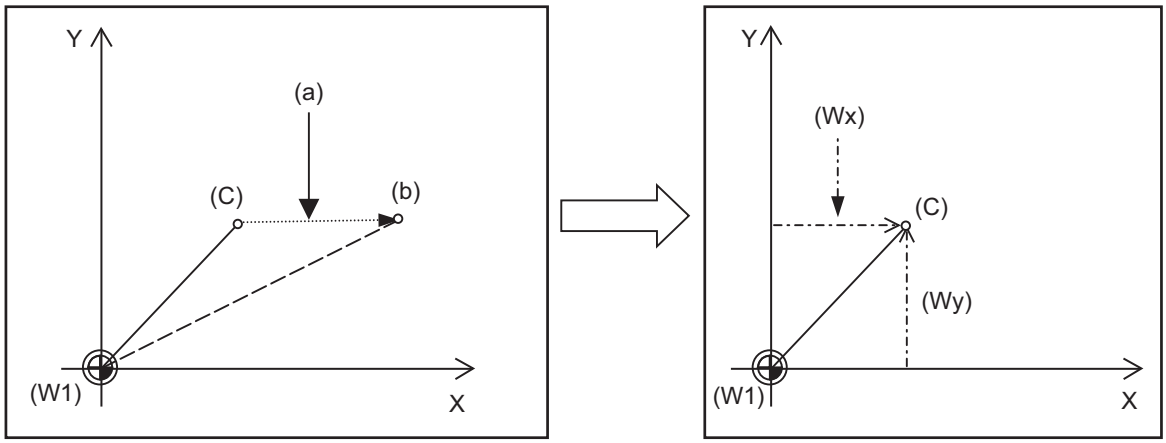


(a) Movement amount during machine lock
(b) Workpiece coordinate system coordinate value
(Wx) (Wy) Workpiece coordinate (x, y) after preset
(C) Current position
(W1) Workpiece coordinate zero point

If the movement command is issued in the machine lock state, the current position will not move, and only the workpiece coordinates will move.
This function returns the moved workpiece coordinates to the original current position, and sets the distance from W1 to the current position as the workpiece coordinate system's current position.

(3) When operation is carried out with mirror image

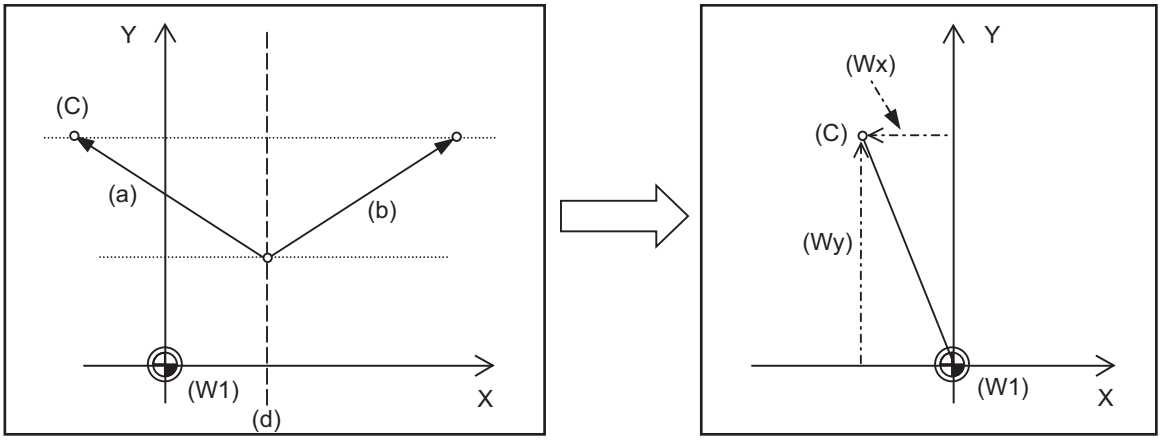


(a) Actual operation
(b) Program command
(C) Current position
(d) Mirror image center
(Wx) (Wy) Workpiece coordinate (x, y) after preset
(W1) Workpiece coordinate zero point

If operation is carried out with mirror image, only the NC internal coordinates are used as the program command coordinates. The other coordinates are the current position coordinates.
This function sets the NC internal coordinates as the current position coordinates.

(4) Setting local coordinate system with G52

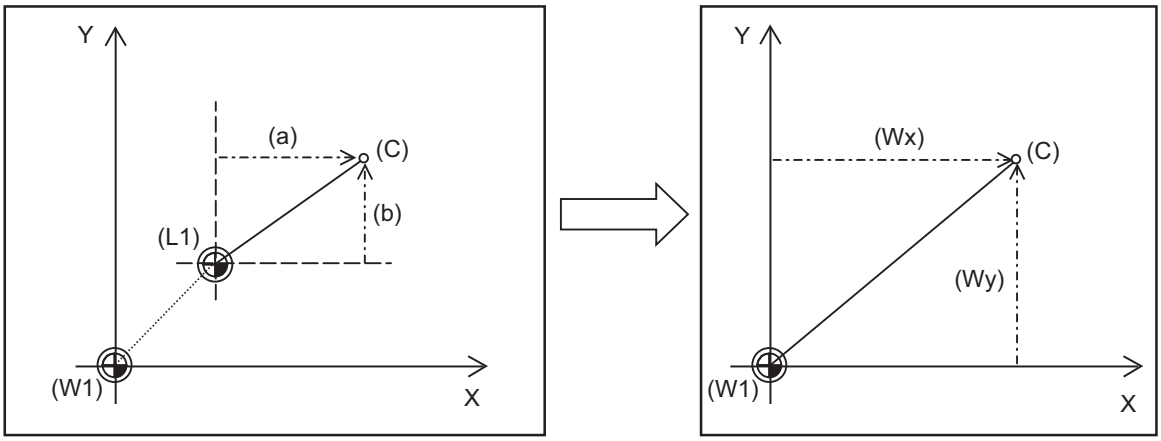


(a) Local coordinates x
(b) Local coordinates y
(Wx) (Wy) Workpiece coordinate (x, y) after preset
(C) Current position
(L1) Local coordinate zero point
(W1) Workpiece coordinate zero point

The local coordinate system is set with the G52 command, and the program commands, etc., are issued with the local coordinate system.
With this function, the set local coordinate system is canceled, and the program commands, etc., use the workpiece coordinate system which has W1 as the zero point. The canceled local coordinate system is only the selected workpiece coordinate system.

(5) Shifting the workpiece coordinate system with G92

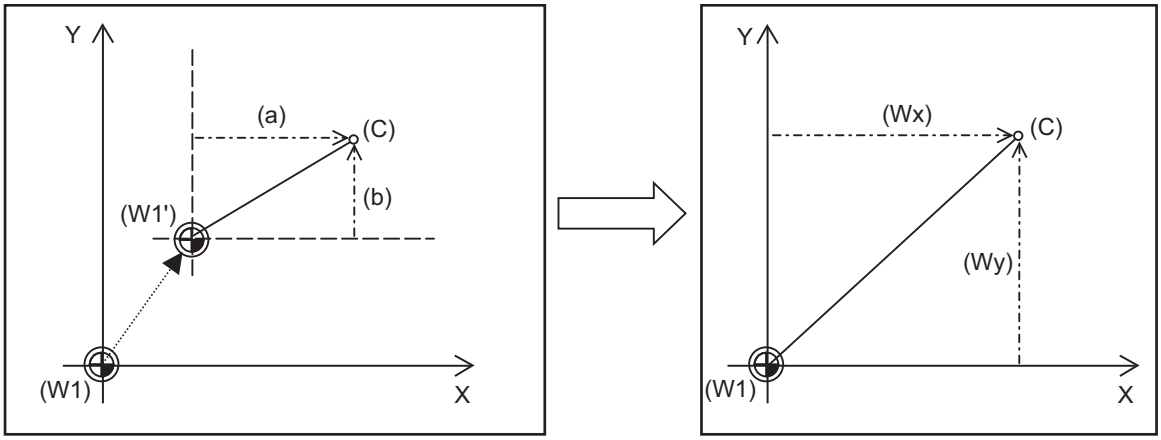


(a) Local coordinates x
(b) Local coordinates y
(Wx) (Wy) Workpiece coordinate (x, y) after preset
(C) Current position
(W1) Workpiece coordinate zero point
(W1') Workpiece zero point after G92 command

The workpiece coordinate system shifts with the G92 command, and the distance between W1' and the current position is set as the current position of the workpiece coordinate system.

This function returns the shifted workpiece coordinate zero point to W1, and sets the distance from W1 to the current position as the workpiece coordinate system's present position. This is valid for all workpiece coordinate systems.

## Program example

The workpiece coordinate system shifted with G92 is preset with G92.1.

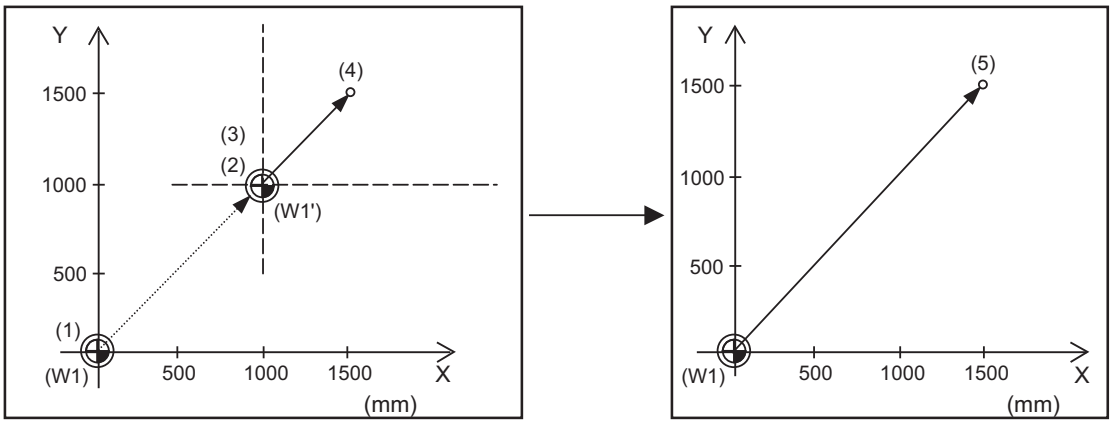


(W1) Workpiece coordinate zero point

(W1') Workpiece zero point after G92 command

(Example)

```
G28 X0 Y0 ;                ... (1)
G00 G90 X1000. Y1000.;     ... (2)
G92 X0 Y0 ;                ... (3)
G00 X500. Y500.;           ... (4)
G92.1 X0 Y0 ;              ... (5)
```

## Relationship with other functions

### Tool No./Tool Compensation No. (T Code)/tool length compensation

If the error check is enabled when the workpiece coordinate system preset is commanded alone in a block (*1), command all the tool compensation axes when commanding "G92.1" during the tool compensation. When commanding "G92.1" during the tool length compensation, designate the tool length compensation axis.
If those axes are not commanded, a program error (P29) will occur.

(*1) The setting depends on the MTB specifications (parameter "#1242 set14/bit1").

When the parameter "#1100 Tmove" is set to "1" or "2", it is assumed that the tool compensation is in process until the movement command is issued to the tool compensation axis after T0101 (tool compensation execution) and T0000 (tool compensation cancellation) are commanded.

### Tool nose radius compensation / Tool radius compensation

Cancel the tool nose radius compensation or the tool radius compensation, and command the workpiece coordinate system preset (G92.1). When the workpiece coordinate system preset (G92.1) is commanded during the tool nose radius compensation or the tool radius compensation, a program error (P29) will occur if none of the tool compensation axes are commanded.

### Other G code commands

If the workpiece coordinate system preset (G92.1) is commanded during the modal shown below, a program error (P34) will occur.

(1) Milling interpolation

(2) Coordinate rotation by program

## Precautions

(1) Cancel tool length compensation, tool nose radius compensation, and tool length compensation when using this function. If this function is executed without canceling them, the workpiece coordinates will be at a position obtained by subtracting the workpiece coordinate offset amount from the machine value. Thus, the compensation vector will be temporarily canceled.

(2) This function cannot be executed while the program is being resumed.

# 20.9 3-dimensional Coordinate Conversion; G68.1/G69.1

## Function and purpose

With the 3-dimensional coordinate conversion function, a new coordinate system can be defined by shifting the zero point and rotating in respect to the X, Y and Z axes of the currently set workpiece coordinate system. By using this function, an arbitrary spatial plane can be defined, and machining on that plane can be carried out with normal program commands.
The validity of this function depends on the MTB specifications. Refer to the specifications of your machine tool.

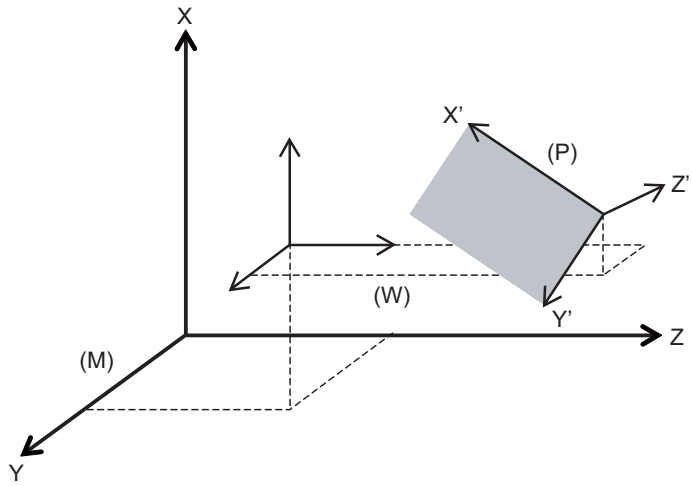


(M) Machine coordinate system (P) G68.1 Program coordinate system (W) Workpiece coordinate system

When 3-dimensional coordinate conversion is commanded, the zero point is shifted by the command value (x, y, z) in respect to the current local coordinate system. A new G68.1 program coordinate system rotated by the designated rotation angle "r" in respect to the commanded rotation center direction (i, j, k) is created.

The local coordinate system is the same as the workpiece coordinate system when the local coordinate system offset is not ON.

## Command format

### 3-dimensional coordinate conversion mode command

```
G68.1 X__ Y__ Z__ I__ J__ K__R__ ,E__ ;
```

| | |
|---|---|
| X, Y, Z | Rotation center coordinates<br>Designate with the absolute position of the local coordinate system. |
| I, J, K | Rotation center axis direction (1: Designated, 0: Not designated)<br>Set only one of the three axes to "1". Set the other two axes to "0". |
| R | Rotation angle<br>The counterclockwise direction looking at the rotation center from the rotation center axis direction is positive (+).<br>The setting range is -360 to 360°, and the unit follows the minimum command unit. |
| ,E | Command coordinate system selection<br>0: G68.1 Program coordinate system<br>1: Coordinate system before rotation (Local coordinate system)<br>When the ",E" command is omitted, it is considered that "0" is commanded. |

### 3-dimensional coordinate conversion mode cancel command

```
G69.1 ;
```

### Detailed description

(1) Command the rotation center coordinates with the absolute command. If the rotation center is commanded with the incremental command address U, V, or W, a program error (P33) will occur.

(2) If the rotation center coordinates are omitted, the zero point of the currently set coordinate system will be the rotation center coordinates.

(3) Designate values for all of I, J and K.
If any of the I, J, K is not designated, the command for coordinate rotation by program will be valid.

(4) Set "1" in only one of I, J and K, and set "0" for the other two.
A program error (P33) will occur if "1" is set in two or more.

(5) A program error (P33) will also occur if "0" is set for all addresses I, J and K.

(6) If a number other than "0" (including numbers of two or more digits) is designated for addresses I, J and K, this will be handled as "1".
If a blank is designated, this will be handled as "0".

(7) If a G code that cannot be commanded in the 3-dimensional coordinate conversion modal is issued, a program error (P921) will occur. When 3-dimensional coordinate conversion is commanded during the modal where 3-dimensional coordinate conversion cannot be carried out, a program error (P922) will occur.
If a G code that cannot be combined with G68.1 or G69.1 is issued to the same block as for the G68.1 or G69.1 command, a program error (P923) will occur. However, when the program is not in the 3-dimensional coordinate conversion modal, even if a G code that cannot be combined with G68.1 or G69.1 is issued to the same block as for the G69.1 command, a program error (P923) will occur. For details, refer to "Relationship with other functions".

(8) Issue this G code alone in a block. If another G code command is issued to the same block as that of the G68.1 command, a program error (P923) will occur.

(9) The 3-dimensional coordinate conversion command for the rotary axis will result in a program error (P32).

(10) If a 3-dimensional coordinate conversion command is issued when there are no specifications for 3-dimensional coordinate conversion, a program error (P920) will occur.

(11) Addresses I, J, and K for determining the rotation center axis refer to the axes set to basis axis I (#1026 base_I), basis axis J (#1027 base_J), and basis axis K (#1028 base_K) respectively. Designate the correct basis axes I, J and K. If these settings are incorrect, a program error (P610) will occur.

(12) When an invalid value is commanded for the rotation angle, it will be divided by 360 (degrees) and the remainder will be a command value.

(13) If any other value than "0" or "1" is designated for address ",E", a program error (P35) will occur.

(14) If an unspecified axis address is commanded to basis axis I, J, or K, a program error (P32) will occur.

(15) When the parameter "#1244 set16/bit6" is set to "1" (ON), if a non-existent axis address is commanded, a program error (P32) will occur. (This parameter setting depends on the MTB specifications.)

### Coordinate system

(1) By issuing the 3-dimensional coordinate conversion command, a new coordinate system (G68.1 program coordinate system) will be created on the local coordinate system.

(2) The coordinate system for the 3-dimensional coordinate conversion rotation center coordinates is the local coordinate system.
Therefore, these coordinate systems are affected by the following coordinate system offset and coordinate system shift amount.

- When local coordinate system is set with G52
- G92 shift amount by G92 command
- Coordinate system offset corresponding to the workpiece coordinate system selected with the command
- External workpiece coordinate offset
- Manual interruption amount or manual feed amount when manual ABS is OFF

(3) Any command that affects the local coordinate system cannot be issued during the 3-dimensional coordinate conversion modal. (If a command that affects the local coordinate system is issued, a program error (P921) will occur.)

(4) After the conversion command is issued, the G68.1 program coordinate system can be canceled either by the G69.1 command or reset input. (However, when the parameter "#1151 rsint" is set to "0", the 3-dimensional coordinate conversion mode will be kept.)

(5) Whether to run the manual operation during the 3-dimensional coordinate conversion modal in the G68.1 program coordinate system can be designated by the "3D coordinate conversion: Manual feed coordinates switch" signal. (This depends on the MTB specifications.)

### Rotation angle

(1) For the rotation angle, the counterclockwise direction looking at the rotation center from the plus direction of the rotation center axis is the plus (+) direction.

### Rotation center coordinates

(1) The rotation center coordinate of this G code is commanded with the local coordinate system (G68.1 program coordinate system during the 3-dimensional coordinate conversion modal).

(2) The rotation center coordinate designation is handled as an absolute command either the absolute modal or the incremental modal (G90 or G91) is being executed at that point. If an address of the incremental command axis name is commanded, a program error (P32) occurs.

(3) If the rotation center coordinate is omitted, it will be handled as if the zero point of the current local coordinate (G68.1 program coordinate system during the 3-dimensional coordinate conversion modal) is designated for the omitted address's axis. (This is equivalent to simply setting "0".)

### Multiple commands

For the "G68.1 ,E0" command, two or more multiple commands can be issued by commanding 3-dimensional coordinate conversion during the 3-dimensional coordinate conversion modal.
For the "G68.1 ,E1" command, multiple commands cannot be issued.

| Command | When the command shown on the left is issued during the "G68.1 ,E0" command | When the command shown on the left is issued during the "G68.1 ,E1" command |
|---|---|---|
| G68.1 ,E0 | Can be commanded (multiple commands can be issued). | Program error (P921) |
| G68.1 ,E1 | Program error (P921) | Program error (P921) |

(1) The 3-dimensional coordinate conversion command in the 3-dimensional coordinate conversion modal is combined with the conversion in the modal.

(2) If 3-dimensional coordinate conversion is overlapped during the 3-dimensional coordinate conversion modal, the overlapped 3-dimensional coordinate conversion will be created on the coordinate system (G68.1 program coordinate system) created with 3-dimensional coordinate conversion in the modal.
Therefore, the rotary axis and coordinates must be designated with this G68.1 program coordinate system.
If creating a 90° rotated coordinate system for X axis and Y axis each, commands must be issued as in Example 2, not Example 1.

<Example 1>

| | |
|---|---|
| G68.1 X0. Y0. Z0. I1 J0 K0 R90.; | X axis rotation 90° |
| G68.1 X0. Y0. Z0. I0 J1 K0 R90.; | Y axis rotation 90°<br>(The Y axis designated here is the same as the Z axis in the original coordinate system.) |

<Example 2>

| | |
|---|---|
| G68.1 X0. Y0. Z0. I1 J0 K0 R90.; | X axis rotation 90° |
| G68.1 X0. Y0. Z0. I0 J0 K1 R-90.; | Z axis rotation 90°<br>(The Z axis -90 rotation designated here is the same as the Y axis +90 rotation in the original coordinate system.) |

(3) Even if multiple commands are issued, all 3-dimensional coordinate conversion commands are canceled by executing the 3-dimensional coordinate conversion cancel command (G69.1) once.

### Conversion method for 3-dimensional coordinate conversion

The coordinate values (Xp, Yp, Zp) in the newly set G68.1 program coordinate system and the coordinate values (Xm, Ym, Zm) in the reference workpiece coordinate system are converted as shown below.

| | |
|---|---|
| [1st G68.1 command] | |
| [Xm, Ym, Zm, 1]=[Xp, Yp, Zp, 1]R1 T1 | (Forward row) |
| [Xp, Yp, Zp, 1]=[Xm, Ym, Zm, 1]$(T1^{-1})(R1^{-1})$ | (Reverse row) |

| |
|---|
| [2nd G68.1 command] |
| [Xm, Ym, Zm, 1]=[Xp, Yp, Zp, 1]R2 T2 R1 T1 |
| [Xp, Yp, Zp, 1]=[Xm, Ym, Zm, 1]$(T1^{-1})(R1^{-1})(T2^{-1})(R2^{-1})$ |

R1, R2 : Rotation row calculated from first and second G68.1 parameter

T1, T2 : Movement row calculated from first and second G68.1 parameter

The conversion rows Rn and Tn (n = 1, 2) are as follow.

Rn conversion row

| I designation (rotation around X axis) | J designation (rotation around Y axis) | K designation (rotation around Z axis) |
|---|---|---|
| $\begin{pmatrix} 1 & 0 & 0 & 0 \\ 0 & \cos R & \sin R & 0 \\ 0 & -\sin R & \cos R & 0 \\ 0 & 0 & 0 & 1 \end{pmatrix}$ | $\begin{pmatrix} \cos R & 0 & -\sin R & 0 \\ 0 & 1 & 0 & 0 \\ \sin R & 0 & \cos R & 0 \\ 0 & 0 & 0 & 1 \end{pmatrix}$ | $\begin{pmatrix} \cos R & \sin R & 0 & 0 \\ -\sin R & \cos R & 0 & 0 \\ 0 & 0 & 1 & 0 \\ 0 & 0 & 0 & 1 \end{pmatrix}$ |

Tn conversion row

| | |
|---|---|
| $\begin{pmatrix} 1 & 0 & 0 & 0 \\ 0 & 1 & 0 & 0 \\ 0 & 0 & 1 & 0 \\ x & y & z & 1 \end{pmatrix}$ | x, y, z : Rotation center coordinates (parallel movement amount)<br>I, J, K : Rotation axis selection<br>R : Rotation angle |

### Manual operation in G68.1 program coordinate system

Whether to run manual operations (jog feed, incremental feed, and manual handle feed) during the 3-dimensional coordinate conversion modal in the coordinate system (G68.1 program coordinate system) after the 3-dimensional coordinate conversion command was issued can be designated by switching the manual feed coordinate for 3-dimensional coordinate conversion.
When the axis stops during machining, operations such as a pulling operation by manual feed can be performed in the G68.1 program coordinate system.

To perform manual operation during oblique hole machining while executing the local coordinate system command, set the "3D coordinate conversion: Manual feed coordinates switch" signal to ON to feed the tool in the Z axis direction; it moves in the tool axis direction. (The tool may be damaged if it is fed in a direction other than the Z axis.)

(1) Coordinate switching enable conditions
A manual operation coordinate change by switching the manual feed coordinate for 3-dimensional coordinate conversion is available only when the "3D coordinate conversion: Manual feed valid" signal is set to ON. (The operation of the PLC signal depends on the MTB specifications.)
The manual operation coordinate change by switching the manual feed coordinate for 3-dimensional coordinate conversion becomes valid after three basic axes have stopped. When the manual feed coordinate for 3-dimensional coordinate conversion is switched while even one of three basic axes is moving, a coordinate change is performed after three basic axes have stopped.
The "3D coordinate conversion: Manual feed valid" signal is set to ON when all of the following conditions are satisfied.

(a) One of the jog, incremental, or handle feed modes is selected.

(b) G68.1 (3-dimensional coordinate conversion command) is commanded at least once.

When the signal is reset after G68.1 (3-dimensional coordinate conversion command) was commanded, the signal turns ON. If the signal is canceled by the G69.1 command, the signal does not turn ON until G68.1 is commanded again. However, even if blocks following the G69.1 command are searched by restarting the program, the "3D coordinate conversion: Manual feed valid" signal is not affected.

(2) Precautions

(a) The speed limit is applied so that the speed distributed to the movement amount in the machine axis direction does not exceed the clamp speed of each axis.

(b) If even one axis satisfies the external deceleration conditions, the speed limit is applied so that the movement speed in each axis direction does not exceed the external deceleration speed.

(c) The movement amount by handle feed conforms to that on the G68.1 program coordinate system.

(d) The manual tool length measurement is not available during 3-dimensional coordinate conversion. When the manual tool length measurement is performed during 3-dimensional coordinate conversion, an operation error (M01 0140) will occur. During the manual tool length measurement, set the "3D coordinate conversion: Manual feed coordinates switch" signal OFF.

(e) When the "Manual automatic simultaneous valid axis" signal is set to ON for any of three basic axes, operation is performed in the same way as when the "Manual automatic simultaneous valid axis" signal for three basic axes is set to ON.

(f) When the manual machine lock signal is set to ON for any of three basic axes, operation is performed in the same way as when the manual machine lock signal for three basic axes is set to ON.

(g) During the manual operation of the G68.1 program coordinate system, if a factor to stop the axis under manual movement, such as manual interlock, occurred in the moving basic axis, all the moving basic axes decelerate and stop.

(h) When the 3-dimensional coordinate conversion modal state is canceled by reset, etc., the manual feed for 3-dimensional coordinate conversion can be executed; however, the workpiece coordinate position display function returns to the orthogonal coordinate system regardless of the setting of the parameter "#1561 3Dcdc".

(i) In the 3-dimensional coordinate conversion manual-feed mode, two or more axes of three basic axes cannot be moved simultaneously. If they are moved simultaneously, an operation error (M01 0141) will occur.

## Local coordinate system command

The local coordinate system command can designate the position in the local coordinate system, for which 3-dimensional coordinate conversion is not executed, even after setting the G68.1 program coordinate system that was parallely moved and rotated from the local coordinate system.

The local coordinate system command moves in the direction along the axis of the G68.1 program coordinate system rotated by 3-dimensional coordinate conversion, so oblique machining is possible.

If the local coordinate system command is issued when the specifications of this function are not provided, a program error (P920) will occur.

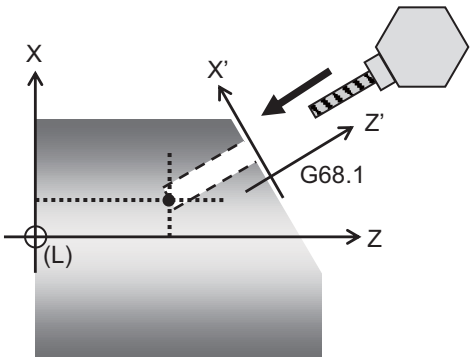


(L): Local coordinate system

G68.1: G68.1 Program coordinate system

[Detailed description]

To command "G68.1 ,E1", set the X axis (I axis) or Y axis (J axis) to the rotation center, and designate the angle between the machining direction (hereinafter referred to as "tool path direction") and the Z axis (K axis) as the rotation angle.
While the "G68.1 ,E1" command is being executed, the tool can be moved in the tool path direction and the axis direction (hereinafter referred to as "rotation center direction") set to the rotation center. The tool cannot be moved in other directions, so determine the machining position before issuing the "G68.1 ,E1" command.

(1) Command for single-axis linear axis

The movement in the tool path direction can be defined with the single-axis linear axis other than the rotation center direction.
In this case, the tool moves in the tool path direction even with the command of the single linear axis only, and travels to the commanded local coordinate system position.

```
#1028 base_K = Z
 :
N01 G68.1 ,E1 Z25. I0K0J1 R30.;
N02 G01 X10. F100.;
 :
N10 G69.1;
 :
```

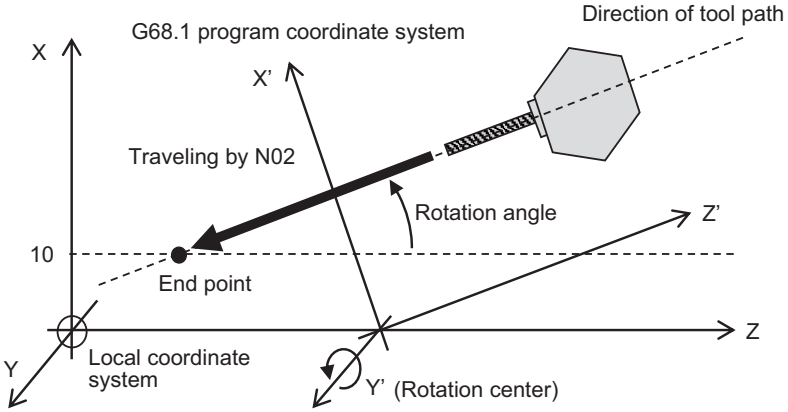


Multiple "G68.1 ,E1" commands cannot be issued. If a "G68.1 ,E1" command is reissued while another "G68.1 ,E1" command is being executed, a program error (P921) will occur.

(2) Command for two linear axes

The movement in the tool path direction can be defined by issuing the movement command in the same block for the two linear axes other than the rotation center direction. However, when the end point of the movement by the command is not in the tool path direction, if a deviation of the end point, to which the tool moves when only a single axis is commanded respectively, is greater than the setting value of the parameter "1599 3DEndPoint-Err" (*1), a program error (P925) will occur.
If the deviation is smaller than the setting value, the command value of the priority axis is determined by plane selection, and the program operates in the same way as when only the single axis is commanded. For the correspondence between the plane selection and priority axis, refer to the following table.
If no command is issued for the priority axis, a program error (P924) will occur.

(*1) This is the parameter to designate the allowable range of an end point deviation in the 3-dimensional coordinate conversion mode, which depends on the MTB specifications.

| Plane | Priority axis |
|---|---|
| X-Y plane (G17) | X axis |
| Z-X plane (G18) | Z axis |
| Y-Z plane (G19) | Y axis |

The figure below shows an example to command the movement to the end point that is not in the tool path direction when the Z-X plane selection is designated. If an end point deviation is below the setting value of the parameter #1599, the tool moves to the local coordinate system position, which is commanded to the Z axis of the priority axis, in the tool path direction.

```
#1026 base_I = X
#1027 base_J = Y
#1028 base_K = Z
 :
N01 G18;
N02 G68.1 ,E1 Z25. I0K0J1 R30.;
N03 G01 X10. Z20. F100.;
 :
N10 G69.1;
 :
```

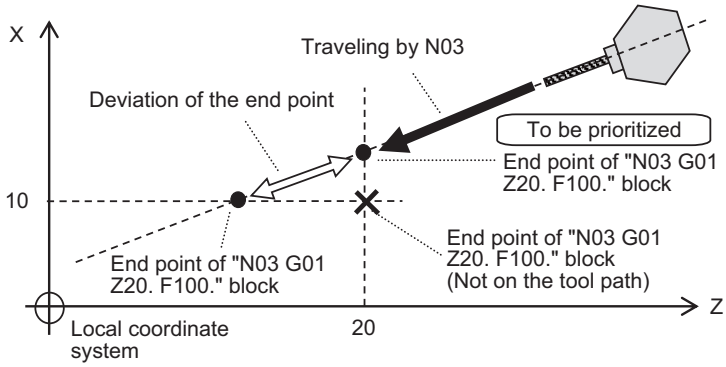


The linear axes unrelated to the 3-dimensional coordinate conversion function other than the axes set to basic axis I, J, or K can be commanded regardless of the setting of the "G68.1 ,E1" command.

[Restrictions]

(1) Set basic axes I, J, and K as shown below.
#1026 base_I = X
#1027 base_J = Y
#1028 base_K = Z

(2) To command "G68.1 ,E1", always set the rotation center coordinates of the rotation center axis to "0".

(3) A linear axis and rotary axis cannot be commanded in the same block. If commanded, a program error (P924) will occur.

(4) The movement in the tool path direction and that in the rotation center direction cannot be commanded in the same block. If commanded, a program error (P924) will occur.

(5) A basic axis and non-basic axis cannot be commanded in the same block. If commanded, a program error (P924) will occur.

(6) Command the circular interpolation and helical interpolation so that the end point is placed in the tool path direction. However, when the end point is not in the tool path direction, if an end point deviation is greater than the setting of the parameter #1599, a program error (P925) will occur.

(7) When the fixed cycle is used during the "G68.1 ,E1" command execution, do not command the initial point for the axes set as basic axis I, J, or K. In this case, define the machining position before commanding the fixed cycle.

(8) The following functions cannot be commanded while "G68.1 ,E1" is active. If commanded, a program error (P921) occurs.

| G code | Function |
|---|---|
| G28 | Reference position return |
| G29 | Start position return |
| G30 | 2nd to 4th reference position return |
| G30.1 | Tool exchange position return 1 |
| G30.2 | Tool exchange position return 2 |
| G30.3 | Tool exchange position return 3 |
| G30.4 | Tool exchange position return 4 |
| G30.5 | Tool exchange position return 5 |

## Program example

**Program example 1**

```
N1 G68.1 X0. Z10. Y0. I0 J1 K0 R30.;
N2 G68.1 X0. Z0. Y-10. I0 J0 K1 R45.;
 :
N3 G69.1;
```

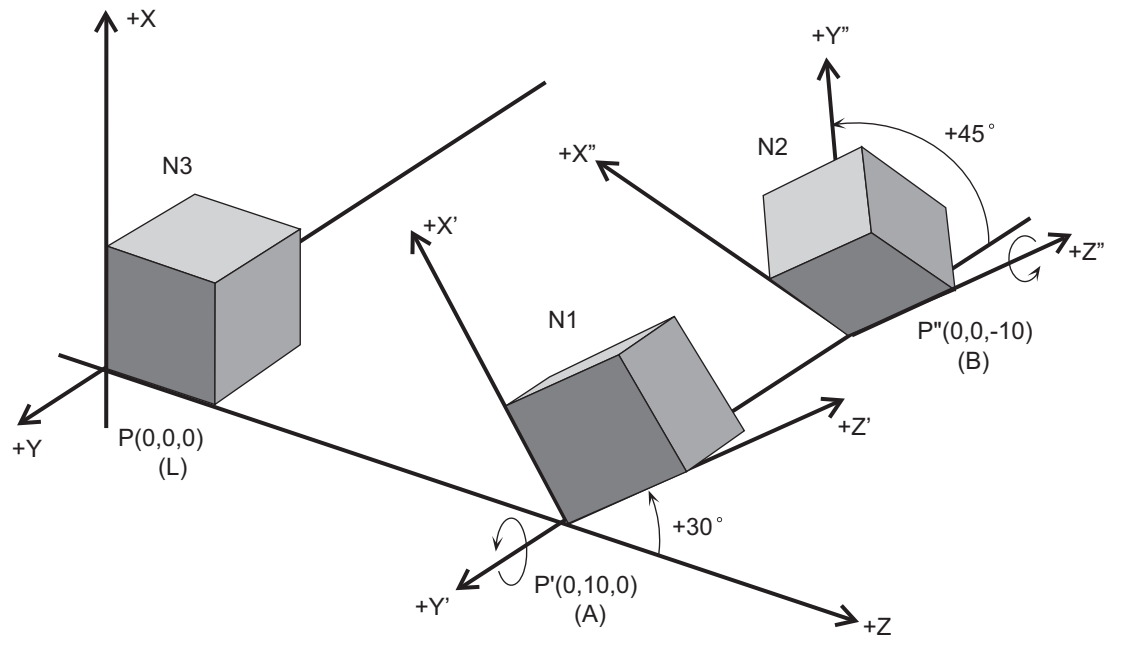


(1) With N1, the zero point is shifted by (X, Z, Y) = (0,10, 0) in respect to the currently set local coordinate system (L). The new G68.1 program coordinate system (A) rotated +30° in the counterclockwise direction using the Y axis as the center, is set.

(2) With N2, the zero point is shifted by (X, Z, Y)=(0, 0, -10) in respect to the newly set G68.1 program coordinate system (A). The new G68.1 program coordinate system (B) rotated +45° in the counterclockwise direction using the Z axis as the center, is set.

(3) With N3, the G68.1 program coordinate systems that have been set are all canceled, and the state prior to where the first G68.1 has been commanded is resumed.

### Program example 2

This is only a sample program to explain about the operations. (To actually proceed with the machining by using this program, the dedicated tools and the tool change functions are required.)

(1) Example of machining program using arc cutting

In the following program example, 3-dimensional coordinate conversion is performed after the arc cutting (N3 block) for the Y-Z plane of the workpiece, and the arc cutting (N8 block) is being carried out on the Y'-Z' plane.

| | |
|---|---|
| N01 G19 G90 G00 X0 Z0 Y0; | Position to the workpiece zero point P. |
| N02 G00 X400. Z200. Y100.; | Move to (400, 200, 100) with rapid traverse. |
| N03 G02 Z400. Y100. K100. F1000; | Carry out arc cutting for the Y-Z plane of the workpiece. |
| N04 G00 X600.; | Escape +200 in +X direction with rapid traverse. |
| N05 G68.1 X400. Z0 Y0 I0 J0 K1 R90.; | Set G68.1 program coordinate system (X' Z' Y') rotated +90° in Z axis direction using (400, 0, 0) position as center. |
| N06 G19 G90 G00 X0 Z0 Y0; | Position to the new program zero point P'. |
| N07 G00 X400. Z200. Y100.; | Move to G68.1 program coordinate system (400, 200, 100) and workpiece coordinate system (200, 200, 200) with rapid traverse. |
| N08 G02 Z400. Y100. K100. F1000; | Carry out arc cutting for the Y'-Z' plane of the workpiece. |
| N09 G00 X600.; | Move +200 in +X' direction of G68.1 program coordinate system with rapid traverse. |
| N10 G69.1; | |
| N11 M02; | |

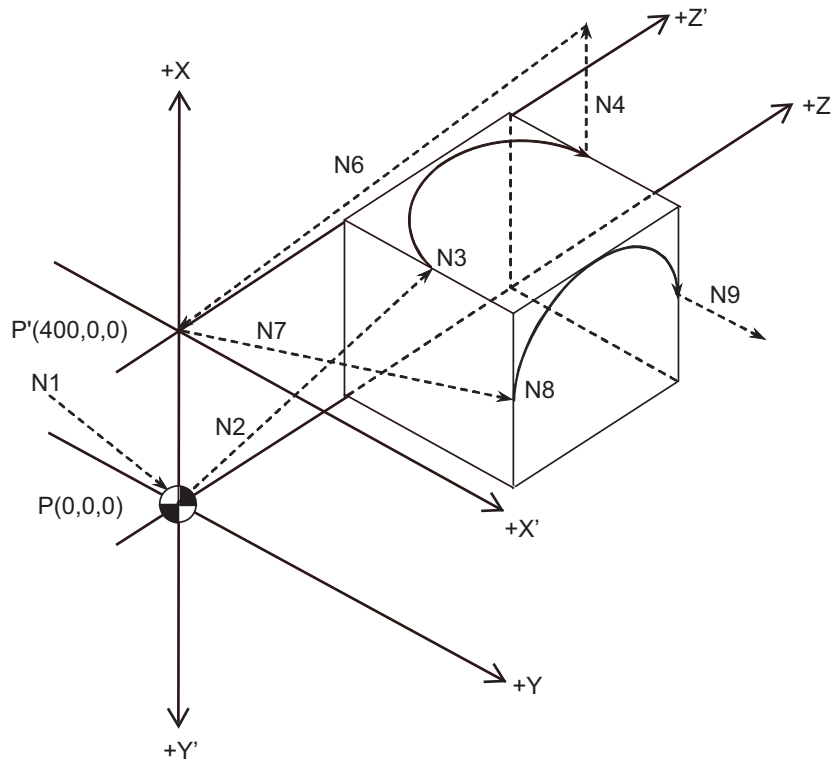

(2) Example of machining program using fixed cycle

In the following program example, the fixed cycle for drilling (subprogram O2000) executed on the face of the workpiece is also carried out on the side of the workpiece. By using 3-dimensional coordinate conversion, the side can be cut using the same process.

| | |
|---|---|
| N01 G00 X0 Z0 Y0 F2000 ; | Position to the workpiece coordinate system's 1st workpiece zero point. |
| N02 G00 Z200.Y80. ; | Move to the (0, 200, 80) position with rapid traverse. |
| N03 G68.1 Z200. Y80. I0 J1 K0 R30. ; | Set G68.1 program coordinate system (X', Y', Z') rotated +30° in Y axis direction using (0, 200, 80) position as center. |
| N04 M98 P2000 ; | Call the drilling subprogram. |
| N10 G69.1 ; | Cancel 3-dimensional coordinate conversion modal. |
| N11 G00 X0 Y0 Z0 ; | Position to workpiece zero point. |
| N12 M02 ; | End program. |

| | |
|---|---|
| O2000 (Drilling) | |
| N101 G00 X0 Z20.Y0. ; | Move to (0, 20, 0) position in the local coordinate system with rapid traverse. |
| N102 G81 X30. Z-20. Y90. R10. F200 ; | Drill a hole at the (30, 20, 90) position in the local coordinate system. |
| N103 X45. ; | Drill a hole at the (45, 20, 90) position in the local coordinate system. |
| N104 G80 ; | Cancel the fixed cycle for drilling. |
| N105 G00 X0 Y0 Z20. ; | Move to (0, 0, 20) position in the local coordinate system with rapid traverse. |
| N106 G00 X0 Y0 Z0 ; | Move to (0, 0, 0) position in the local coordinate system with rapid traverse. |
| N108 M99 ; | Exit the subprogram. |

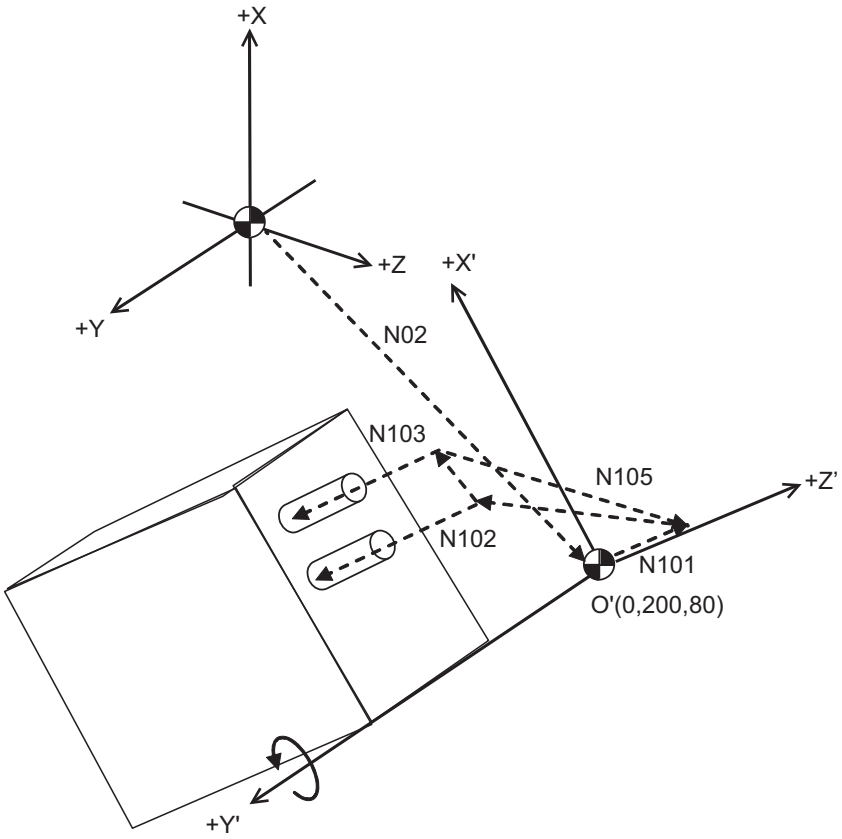

## Relationship with other functions

(1) Circular interpolation
Circular interpolation in the 3-dimensional coordinate conversion modal operates according to the coordinate value resulting from 3-dimensional coordinate conversion. With G17, G18 and G19 commands, circular interpolation functions normally for all the planes in which 3-dimensional coordinate conversion has been executed.

The circular radius error compensation is not performed during 3-dimensional coordinate conversion.
In the local coordinate system command modal, designate the center command (I, J, or K) for circular and helical interpolation with the distance in the oblique coordinate system.

(2) Fine spline
Designation of a spline axis should be done to the movement axis after the 3-dimensional coordinate conversion. When a movement occurs to the axis in which spline cannot be designated, spline will be in the pause status.

(3) Reference position check
The 3-dimensional coordinate conversion is applied for the positioning commanded by G27 in the 3-dimensional coordinate conversion modal.

(4) Reference position return
3-dimensional coordinate conversion is applied for the mid-point commanded by G28 and G30 in the 3-dimensional coordinate conversion modal. However, reference position return will be carried out without the 3-dimensional coordinate conversion.

When this is commanded while the local coordinate system command is active, a program error (P921) occurs.

(5) Tool exchange position return
3-dimensional coordinate conversion is not carried out for the tool change position even if a command from G30.1 to G30.6 is issued in the 3-dimensional coordinate conversion modal. The returning order and position will be on the machine coordinate system.

When this is commanded while the local coordinate system command is active, a program error (P921) occurs.

(6) Nose R compensation
When the nose radius compensation is executed during the 3-dimensional coordinate conversion modal, 3-dimensional coordinate conversion is carried out after the compensation value has been applied to the coordinate value. To execute the nose radius compensation, set the tool nose point to "0". If the nose radius compensation is performed during the 3-dimensional coordinate conversion modal while a value other than "0" is set, a program error (P610) will occur.

(7) Tool shape compensation
For the tool shape compensation, whether to apply the tool shape compensation before or after 3-dimensional coordinate conversion depends on the MTB specifications (parameter "#1256 set28/bit3").

["#1256 set28/bit3" = "0"]

The tool shape compensation is applied before 3-dimensional coordinate conversion is carried out. The tool shape compensation value is also targeted for 3-dimensional coordinate conversion, so you can use the same value as before 3-dimensional coordinate conversion. When the tool shape compensation is commanded before the 3-dimensional coordinate conversion, position all the axes to be affected by compensation after 3-dimensional coordinate conversion, then carry out machining.

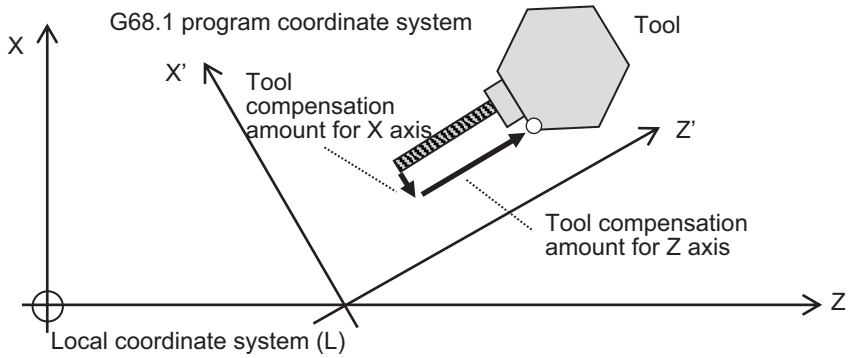

["#1256 set28/bit3" = "1"]

The tool shape compensation is applied after 3-dimensional coordinate conversion is carried out. The tool shape compensation value is not targeted for 3-dimensional coordinate conversion, so set the appropriate value which corresponds to the commanded rotation angle.

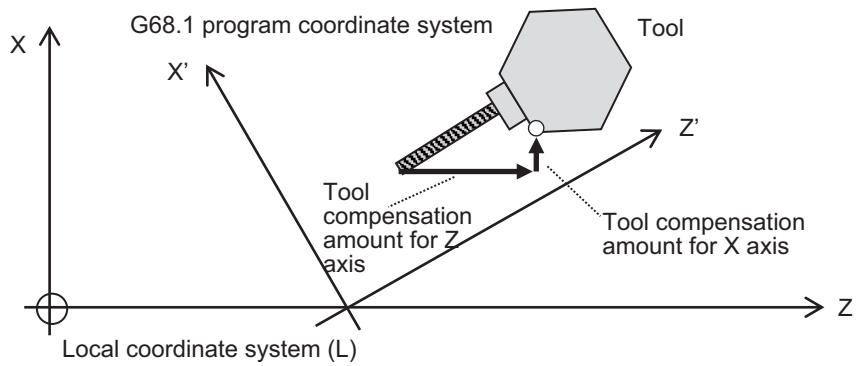


(8) Mirror image

When the mirror image command is issued in the 3-dimensional coordinate conversion modal, as well as when executing the 3-dimensional coordinate conversion in the mirror image modal, 3-dimensional coordinate conversion will be executed for the coordinate value, which is calculated by the mirror image.

If the T code mirror image for facing tool posts or the mirror image for facing tool posts by the G68 command is commanded during the 3-dimensional coordinate conversion modal, a program error (P921) will occur.

Also, if 3-dimensional coordinate conversion is commanded during the T code mirror image for facing tool posts or the mirror image for facing tool posts by the G68 command, a program error (P922) will occur.

(9) Fixed cycle for drilling

The fixed cycle in the 3-dimensional coordinate conversion can be executed in an oblique direction for the orthogonal coordinate system.

However, the fixed cycle hole drilling rapid traverse rate during the 3-dimensional coordinate conversion modal is switched as shown below by the settings of the parameters "#15663 DselctDrillaxMode" and "#1564 3Dspd". (This depends on the MTB specifications.)

Fixed cycle rapid traverse rate during 3-dimensional coordinate conversion

| #1566 | 0 (Rapid traverse mode) | 1 (Cutting mode) | |
|---|---|---|---|
| #1564 | - | 0 | 1 to 1000000 |
| Rapid traverse rate | The "#2001 rapid" value for each machine axis is converted to the speed in the composite movement direction, and the slowest speed is applied. | The "#2002 clamp" value for each machine axis is converted to the speed in the composite movement direction, and the slowest speed is applied. | The value (mm/min) set to "#1564 3Dspd" is applied. |

<Note>

- The speed of operation 1 in the table above conforms to the "#2001 rapid" value regardless of the parameter setting above.
- When a macro interruption, MDI interruption, or PLC interruption is carried out in the fixed cycle during 3-dimensional coordinate conversion, the rapid traverse rate in the interrupt machining program conforms to the "#2001 rapid" value regardless of the parameter setting above.

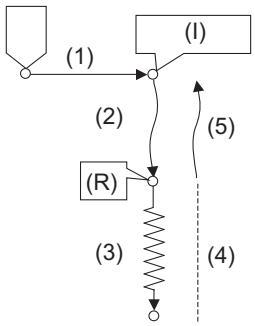


[Operation]

(1) Position to the initial position at the rapid traverse rate.
(2) Position to the R point at the rapid traverse rate.
(3) Hole machining is conducted by cutting feed.
(4) Escape to the R point.
Cutting feed or rapid traverse depending on the fixed cycle mode.
(5) The tool is returned to the initial point at the rapid traverse rate.

(I) Initial point
(R) R point

Each operation shown in the figure is set to compensation operation regardless of the setting of the parameter #1086 (G00 non-interpolation).

Parameter #1566 becomes valid when each fixed cycle is set to rapid traverse mode.

Parameter #1566 is also valid for G83 return operation. For the drilling cycle in the local coordinate system command modal, designate the R point (R) and cutting depth (Q) with the travel amount in the coordinate system before rotation.

(10) Synchronous tapping cycle
The synchronous tapping cycle in the 3-dimensional coordinate conversion can be executed in an oblique direction for the orthogonal coordinate system.
The synchronous tapping cycle in the 3-dimensional coordinate conversion modal will not function even if "#1223 aux07/bit3" (synchronous tapping in-position check improvement) is valid. Set the synchronous tapping cycle to invalid. (This parameter setting depends on the MTB specifications.)
The rapid traverse rate in synchronous tapping cycle always follows the value of #2001 (Rapid traverse rate) during the 3-dimensional coordinate conversion mode, regardless of the values of #1566 (Switch drill axis's mode from rapid traverse during 3-dimensional coordinate conversion) and #1564 (Hole drilling cycle during 3-dimensional coordinate conversion).

When the drive unit in use is not compatible with the high-speed synchronous tapping using multiple axes, set "0" (Invalid) to the parameter "#1281 ext17/bit5" (High-speed synchronous tapping valid).

In the local coordinate system command modal, designate the pitch (F) for tapping cycle with the distance in the oblique coordinate system.

(11) Tapping retract
Tapping retract is possible even when tap machining is interrupted during the 3-dimensional coordinate conversion modal.

(12) Geometric command
Geometric command can be issued in the 3-dimensional coordinate conversion modal. However, if the geometric command is issued in the same block as in the 3-dimensional coordinate conversion command (G68.1, G69.1), a program error (P32) will occur.

(13) Init const sur spd
When the 3-dimensional coordinate conversion command is issued while the parameter initial constant surface speed is valid, the program error (P922) will occur. This is the same consequence as in the case where the 3-dimensional coordinate conversion command is issued in the constant surface speed (G96) modal.

(14) Machine lock
The machine lock in the 3-dimensional coordinate conversion modal will be valid for the movement axis for the coordinate value after executing the 3-dimensional coordinate conversion.

(15) Interlock
The interlock in the 3-dimensional coordinate conversion modal will be valid for the movement axis for the coordinate value after executing the 3-dimensional coordinate conversion.
However, for circular interpolation in the 3-dimensional coordinate conversion modal, when the interlock signal is set to "ON" for any one of the three basic axes (length, width, and height), the axis is interlocked even if the movement is not commanded for the axis.

(16) Coordinate read variable
To read the workpiece coordinate system/skip coordinate system during the 3-dimensional coordinate conversion modal, the local coordinate system and G68.1 program coordinate system can be switched with the parameter "#1563 3Dcdrc".

(17) Workpiece coordinate display
Whether to display the workpiece coordinate system position in the 3-dimensional coordinate conversion modal in the workpiece coordinate system or in the G68.1 program coordinate system can be switched with the parameter "#1561 3Dcdc". This is also applied to the absolute position display of the special display unit.

(18) Remaining command display
Whether to display the remaining commands in the 3-dimensional coordinate conversion modal in the workpiece coordinate system or in the G68.1 program coordinate system can be switched with the parameter "#1562 3Dremc".

<Note>

- A display deviation of the least significant digit may occur during 3-dimensional coordinate conversion; however, this is not an error.

(19) Graphic check
Linear tracing is applied to circular interpolation (including corner R) during 3-dimensional coordinate conversion in graphic check mode.

(20) External deceleration
The external deceleration in the 3-dimensional coordinate conversion modal will be valid for the movement axis for the coordinate value after executing 3-dimensional coordinate conversion.
However, for the external deceleration of each axis in the circular interpolation during the 3-dimensional coordinate conversion modal, when the "External deceleration" signal is set to "ON" for any one of the three basic axes (length, width, and height), the external deceleration speed is applied to the axis even if the movement is not commanded for the axis.

(21) Manual operation in G68.1 program coordinate system
Refer to "Manual Operation in G68.1 Program Coordinate System" in "Detailed description".

(22) Miscellaneous function commands (M, S, T, B)
Do not issue the 3-dimensional coordinate conversion command (G68.1/G69.1) and miscellaneous function commands (M, S, T, and B commands) in the same block. If they are commanded in the same block, a program error (P923) will occur.

(23) PLC window
During the 3-dimensional coordinate conversion modal, the workpiece coordinate offset cannot be rewritten using the PLC window. Doing so causes a PLC window error.

(24) Mixed control
A program error (P921) will occur if the mixed control command (G110) is issued during the 3-dimensional coordinate conversion modal. Also, when an attempt is made to command the mixed control (mixed control II) by the PLC signal during the 3-dimensional coordinate conversion modal, an operation error (M01 1035) will occur.
The 3-dimensional coordinate conversion command in the mixed control mode is available when three basic axes can be composed of the axis configuration with the mixed control executed. If the required conditions are not satisfied, a program error (P610) will occur.

(25) Control axis synchronization between part systems
When an attempt is made to command the control axis synchronization between part systems (control axis synchronization between part systems II) by the PLC signal during the 3-dimensional coordinate conversion modal, an operation error (M01 1037) will occur.
Do not issue the 3-dimensional coordinate conversion command during the control axis synchronization between part systems. Doing so may cause an invalid operation.

(26) Control axis superimposition
When an attempt is made to command the control axis superimposition (control axis superimposition II) by the PLC signal during the 3-dimensional coordinate conversion modal, an operation error (M01 1004) will occur.
Do not issue the 3-dimensional coordinate conversion command during the control axis superimposition. Doing so may cause an invalid operation.

(27) SSS Control, Tolerance Control
The SSS control and tolerance control are temporarily disabled in the 3-dimensional coordinate conversion modal.

(28) Restart search
When the program is resumed in the block that is in the 3-dimensional coordinate conversion modal, it is resumed with the 3-dimensional coordinate conversion execution.
If there is any G69.1 command before the block to resume the search, the state in which the manual feed in 3-dimensional coordinate conversion is valid will be canceled in the same manner as the G69.1 command.

(29) Arbitrary axis exchange control

A program error (P921) will occur if the arbitrary axis exchange control (G140) command is issued during the 3-dimensional coordinate conversion modal.

The 3-dimensional coordinate conversion command in the arbitrary axis exchange control mode is available when three basic axes can be composed of the axis configuration with the arbitrary axis exchange executed. If the required conditions are not satisfied, a program error (P610) will occur.

(30) Others

3-dimensional coordinate conversion is not performed for the following functions. Operation is performed in the machine coordinate system.

- Machine coordinate system selection (G53)
- Start point designation synchronization
- Position switch
- Stored stroke limit
- Chuck barrier/tailstock barrier
- Interference check between part systems

The nose radius compensation command and G81 to G89 fixed cycle commands must be nested inside the G68.1/G69.1 command.

Issue the movement command block following the G68.1 command with the absolute position.

Also, after issuing the nose radius compensation cancel command (G40) and issuing the movement command to the compensation axis, issue the G69.1 command.

(Example)

```
G68.1 X50. Y100. Z150. I1 J0 K0 R60. ;
G00 X0 Y0 Z0 ;
G41 D01 ;

  . . . . . . . . . .

G40 ;
G00 X0 Y0 Z0 ;
G69.1
```

- The G00 command during the 3-dimensional coordinate conversion modal is set to the interpolation type regardless of the setting of the basic parameter "#1086 G0Intp" (G00 non-interpolation).
- During the 3-dimensional coordinate conversion, set "#1200 G0_acc" and "#1201 G1_acc" to "0". If "1" is set, it may cause an invalid acceleration/deceleration operation.
- The manual reference position return is not available during the 3-dimensional coordinate conversion modal. If the manual reference position return mode is set, an operation error (M01 0145) will occur.
- Origin set/Origin cancel is not available during the 3-dimensional coordinate conversion modal.
- When the parameter "#1256 set28/bit3" is set to "0", the program position counter in the G68.1/G69.1 command block, in which the tool shape compensation is active, is shifted by the tool length shape compensation amount. For details about operation differences by the setting of the parameter "#1256 set28/bit3", refer to "Tool shape compensation".

### Relation with other G codes

Pxxx in the list indicates the program error Nos.

Column A: Operation to be carried out when the G command in the list is issued during 3-dimensional coordinate conversion

Column B: Operation to be carried out when 3-dimensional coordinate conversion is commanded while the G command modal in the list is established

Column C: Operation to be carried out when the G command in the list and 3-dimensional coordinate conversion are commanded for the same block

o: Can be commanded.

Δ: Cannot be commanded. (However, this is not assumed to be a program error.)

-: This is an unmodal command, so not targeted.

| G code (G code list: 3) | Function | A | | B | | C | |
|---|---|---|---|---|---|---|---|
| | | G68.1 ,E0 | G68.1 ,E1 | G68.1 ,E0 | G68.1 ,E1 | G68.1 ,E0 | G68.1 ,E1 |
| G00 | Positioning | ○ | | ○ | | P923 | |
| G0.5P1 | Rapid traverse block overlap | ○ | | ○ | | P923 | |
| G0.5P0 | Rapid traverse block overlap invalid | ○ | | ○ | | P923 | |
| G01 | Linear interpolation | ○ | | ○ | | P923 | |
| G02 | Circular interpolation CW | ○ | | ○ | | P923 | |
| | Helical interpolation CW | ○ | | ○ | | P923 | |
| G03 | Circular interpolation CCW | ○ | | ○ | | P923 | |
| | Helical interpolation CCW | ○ | | ○ | | P923 | |
| G02.3 | Exponential interpolation CW | P921 | | P922 | | P923 | |
| G03.3 | Exponential interpolation CCW | P921 | | P922 | | P923 | |
| G04 | Dwell | ○ | | - | | P45 | |
| G05P0 | High-speed machining mode II OFF | P921 | | ○ | | P923 | |
| G05P2 | High-speed machining mode II | P921 | | P922 | | P923 | |
| G05P4 | Direct command mode | P921 | | P961 | | P923 | |
| G05.1Q0 | High-speed high-accuracy control I OFF | P921 | | ○ | | P923 | |
| G05.1Q1 | High-speed high-accuracy control I | P921 | | P922 | | P923 | |
| G05 P0 | High-speed high-accuracy control II OFF | P921 | | ○ | | P923 | |
| G05 P10000 | High-speed high-accuracy control II | P921 | | P922 | | P923 | |
| G07.1/ G107 | Cylindrical interpolation | P921 | | P481 | | P923 | |
| G08P0 | High-accuracy control cancel | P921 | | ○ | | P923 | |
| G08P1 | High-accuracy control | P921 | | P922 | | P923 | |
| G09 | Exact stop check | ○ | | - | | P923 | |
| G10 | Program parameter input | ○ | | P421 | | P421 | |
| | Program compensation input | P921 | | - | | P45 | |

| G code (G code list: 3) | Function | A | | B | | C | |
|---|---|---|---|---|---|---|---|
| | | G68.1 ,E0 | G68.1 ,E1 | G68.1 ,E0 | G68.1 ,E1 | G68.1 ,E0 | G68.1 ,E1 |
| G11 | Parameter input by program cancel | ○ | | - | | P923 | |
| G12.1 | Polar coordinate interpolation | P921 | | P481 | | P923 | |
| G13.1 | Polar coordinate interpolation cancel | ○ | | ○ | | P923 | |
| G12.1 | Milling interpolation ON | P921 | | P481 | | P923 | |
| G13.1 | Milling interpolation cancel | ○ | | ○ | | P923 | |
| G14 | Balance cut OFF | ○ | | ○ | | P923 | |
| G15 | Balance cut ON | P921 | | P922 | | P923 | |
| G16 | Milling interpolation plane selection Y-Z cylindrical plane | P921 | | P481 | | P923 | |
| G17 | Plane selection X-Y | ○ | | ○ | | ○ | |
| G18 | Plane selection Z-X | ○ | | ○ | | ○ | |
| G19 | Plane selection Y-Z | ○ | | ○ | | ○ | |
| G20 | Inch command | ○ | | ○ | | ○ | |
| G21 | Metric command | ○ | | ○ | | ○ | |
| G22 | Barrier check ON (G code list: 2 to 5) | ○ | | ○ | | P923 | |
| G23 | Barrier check OFF (G code list: 2 to 5) | ○ | | ○ | | P923 | |
| G22 | Soft limit ON | ○ | | ○ | | P923 | |
| G23 | Soft limit OFF | ○ | | ○ | | P923 | |
| G27 | Reference position check | ○ | | - | | P45 | |
| G28 | Reference position return | ○ | P921 | - | | P45 | |
| G29 | Start position return | ○ | P921 | - | | P45 | |
| G30 | 2nd to 4th reference position return | ○ | P921 | - | | P45 | |
| G30.1 | Tool position return 1 | ○ | P921 | - | | P33 | |
| G30.2 | Tool position return 2 | ○ | P921 | - | | P33 | |
| G30.3 | Tool position return 3 | ○ | P921 | - | | P33 | |
| G30.4 | Tool position return 4 | ○ | P921 | - | | P33 | |
| G30.5 | Tool position return 5 | ○ | P921 | - | | P33 | |
| G31 | Skip | ○ | | - | | P923 | |
| G31.1 | Multi-step skip 1 | ○ | | - | | P923 | |
| G31.2 | Multi-step skip 2 | ○ | | - | | P923 | |
| G31.3 | Multi-step skip 3 | ○ | | - | | P923 | |
| G33 | Thread cutting | P921 | | P922 | | P923 | |
| G34 | Variable lead thread cutting | P921 | | P922 | | P923 | |
| G35 | Circular thread cutting CW | P921 | | P922 | | P923 | |
| G36 | Circular thread cutting CCW | P921 | | P922 | | P923 | |
| G37 | Automatic tool length measurement | P921 | | - | | P45 | |
| G40 | Tool nose radius compensation cancel | ○ | | ○ | | P923 | |
| G41 | Tool nose radius compensation left | ○ | | P922 | | P923 | |
| G42 | Tool nose radius compensation right | ○ | | P922 | | P923 | |

| G code (G code list: 3) | Function | A | | B | | C | |
|---|---|---|---|---|---|---|---|
| | | G68.1 ,E0 | G68.1 ,E1 | G68.1 ,E0 | G68.1 ,E1 | G68.1 ,E0 | G68.1 ,E1 |
| G43.1 | 1st spindle selection | ○ | | ○ | | ○ | |
| G44.1 | 2nd spindle selection | ○ | | ○ | | ○ | |
| G46 | Tool nose R offset (automatic direction identification) ON | P921 | | P922 | | P923 | |
| G47.1 | All spindles simultaneous control mode ON | ○ | | ○ | | ○ | |
| G50/G92 | Coordinate system setting | P921 | | — | | P923 | |
| G50/G92 | Spindle clamp speed setting | ○ | | ○ | | P923 | |
| G50.2/ G250 (*1) | Polygon machining mode cancel (Spindle-tool axis synchronization) | ○ | | ○ | | P923 | |
| G50.3/ G92.1 | Workpiece coordinate system preset | P921 | | ○ | | P923 | |
| G51.2/ G251 | Spindle-NC axis polygon command (*1) | P921 | | P922 | | P923 | |
| | Spindle-spindle polygon command (*1) | ○ | | ○ | | P923 | |
| G52 | Local coordinate system setting | P921 | | - | | P45 | |
| G53 | Machine coordinate system setting | ○ | | - | | P45 | |
| G54 | Workpiece coordinate system 1 selection | P921 | | ○ | | P923 | |
| G55 | Workpiece coordinate system 2 selection | P921 | | ○ | | P923 | |
| G56 | Workpiece coordinate system 3 selection | P921 | | ○ | | P923 | |
| G57 | Workpiece coordinate system 4 selection | P921 | | ○ | | P923 | |
| G58 | Workpiece coordinate system 5 selection | P921 | | ○ | | P923 | |
| G59 | Workpiece coordinate system 6 selection | P921 | | ○ | | P923 | |
| G54.1 | Extended workpiece coordinate system selection | P921 | | ○ | | P923 | |
| G61 | Exact stop check | ○ | | ○ | | P923 | |
| G61.1 | High-accuracy control | P921 | | P922 | | P923 | |
| G62 | Automatic corner override | ○ | | ○ | | P923 | |
| G63 | Tapping mode | P921 | | P922 | | P923 | |
| G64 | Cutting mode | ○ | | ○ | | ○ | |
| G65 | User macro simple call | ○ | | - | | P261/P923 (*5) | |
| G66 | User macro modal call A | ○ | | ○ | | P261/P923 (*5) | |
| G66.1 | User macro modal call B | ○ | | P262 | | P261/P923 (*5) | |
| G67 | User macro modal call cancel | ○ | | ○ | | P923 | |
| G68 | Mirror image for facing tool posts ON | P921 | | P922 | | P923 | |
| G69 | Mirror image for facing tool posts OFF | ○ | | ○ | | P923 | |
| G68 | Balance cut mode ON | P921 | | P922 | | P923 | |
| G69 | Balance cut mode OFF | P921 | | ○ | | P923 | |

| G code (G code list: 3) | Function | A | | B | | C | |
|---|---|---|---|---|---|---|---|
| | | G68.1 ,E0 | G68.1 ,E1 | G68.1 ,E0 | G68.1 ,E1 | G68.1 ,E0 | G68.1 ,E1 |
| G68.1 | Coordinate rotation by program ON | P921 | | P922 | | - | |
| G68.1 | 3-dimensional coordinate conversion ON (G68.1 ,E0) | ○ | P921 | ○ | P921 | - | |
| | 3-dimensional coordinate conversion ON (G68.1 ,E1) | P921 | | P921 | | - | |
| G69.1 | Coordinate rotation by program cancel | ○ (*2) | | ○ | | (*3) | |
| | 3-dimensional coordinate conversion cancel | ○ | | ○ | | (*3) | |
| G70 | Finishing cycle | P921 | | P922 | | P923 | |
| G71 | Longitudinal rough cutting cycle | P921 | | P922 | | P923 | |
| G72 | Face rough cutting cycle | P921 | | P922 | | P923 | |
| G73 | Formed material rough cutting cycle | P921 | | P922 | | P923 | |
| G74 | Face cut-off cycle | P921 | | P922 | | P923 | |
| G75 | Longitudinal cut-off cycle | P921 | | P922 | | P923 | |
| G76 | Compound type thread cutting cycle | P921 | | P922 | | P923 | |
| G76.1 | Multi-part system simulta-neous thread cutting cycle I | P921 | | - | | P923 | |
| G76.2 | Two-part system simulta-neous thread cutting cycle II | P921 | | - | | P923 | |
| G77(G90) | Longitudinal cutting cycle | P921 | | P922 | | P923 | |
| G78(G92) | Thread cutting cycle | P921 | | P922 | | P923 | |
| G79(G94) | Face cutting cycle | P921 | | P922 | | P923 | |
| G80 | Fixed cycle cancel | ○ | | ○ | | P923 | |
| G81 | Fixed cycle (drill/spot drill) | ○ | | P261 | | P923 | |
| G82 | Fixed cycle (drill/counter boring) | ○ | | P261 | | P923 | |
| G83 | Deep hole drilling cycle (Z axis) | ○ | | P261 | | P923 | |
| G83.1 | Stepping cycle | ○ | | P261 | | P923 | |
| G83.2 | Deep hole drilling cycle 2 | ○ | | P922 | | P923 | |
| G84 | Tap cycle (Z axis) (*4) | ○ | | P261 | | P923 | |
| G84.1 | Reverse tapping cycle (Z axis) (*4) | ○ | | P261 | | P923 | |
| G84.2 | Synchronous tapping cy-cle | ○ | | P261 | | P923 | |
| G85 | Boring cycle | ○ | | P261 | | P923 | |
| G87 | Deep hole drilling cycle (X axis) | ○ | | P261 | | P923 | |
| G88 | Tap cycle (X axis) | ○ | | P261 | | P923 | |
| G88.1 | Reverse tapping cycle (X axis) | ○ | | P261 | | P923 | |
| G89 | Boring cycle | ○ | | P261 | | P923 | |
| G90 | Absolute command | ○ | | ○ | | ○ | |
| G91 | Incremental command | ○ | | ○ | | ○ | |

| G code (G code list: 3) | Function | A | | B | | C | |
|---|---|---|---|---|---|---|---|
| | | G68.1 ,E0 | G68.1 ,E1 | G68.1 ,E0 | G68.1 ,E1 | G68.1 ,E0 | G68.1 ,E1 |
| G92 | Coordinate system setting | P921 | | - | | P923 | |
| G92.1 | Workpiece coordinate system preset | P921 | | - | | P923 | |
| G94 | Asynchronous feed (feed per minute) | ○ | | ○ | | ○ | |
| G95 | Synchronous feed (feed per revolution) | ○ | | ○ | | ○ | |
| G96 | Constant surface speed control ON | P921 | | P922 | | P923 | |
| G97 | Constant surface speed control OFF | P921 | | ○ | | P923 | |
| G98 | Fixed cycle (Initial level return) | ○ | | ○ | | ○ | |
| G99 | Fixed cycle (R point level return) | ○ | | ○ | | ○ | |
| G110 | Mixed control | P921 | | ○ | | P503/P923 | |
| G111 | Axis name switch | P921 | | P922 | | P923 | |
| G113 | Canceling spindle synchronization | ○ | | ○ | | P923 | |
| G114.1 | Spindle synchronization | ○ | | ○ | | P923 | |
| G114.2 | Spindle-spindle polygon | ○ | | ○ | | P923 | |
| G114.3 | Tool spindle synchronization II (Hobbing) ON | P921 | | P922 | | P923 | |
| G115 | Start point designation timing synchronization Type 1 | ○ | | ○ | | P923 | |
| G116 | Start point designation timing synchronization Type 2 | ○ | | ○ | | P923 | |
| G117 | M code output during axis traveling | Δ | | Δ | | P923 | |
| G120.1 | Machining condition selection I | P921 | | - | | P923 | |
| G121 | Machining condition selection I cancel | P921 | | - | | P923 | |
| G122 | Sub part system control I | P921 | | - | | P32/P651 | |
| G125 | Control axis synchronization between part systems | P921 | | P922 | | P33 | |
| G126 | Control axis superimposition | P921 | | P922 | | P923/P33 | |
| G127 | Prohibit manual arbitrary reverse run | P921 | | - | | P923 | |
| G140 | Arbitrary axis exchange control | P921 | | ○ | | P34 | |
| G141 | Arbitrary axis exchange return command | P921 | | ○ | | P34 | |
| G142 | Reference axis arrange return command | P921 | | ○ | | P34 | |
| G144 | Sub part system control II | P921 | | - | | P32/P651 | |
| G145 | Cancel the standby status for completion of sub part system | P921 | | - | | P923 | |
| G156 | Arbitrary axis superimposition | P921 | | P922 | | P923/P33 | |

| G code (G code list: 3) | Function | A | | B | | C | |
|---|---|---|---|---|---|---|---|
| | | G68.1 ,E0 | G68.1 ,E1 | G68.1 ,E0 | G68.1 ,E1 | G68.1 ,E0 | G68.1 ,E1 |
| G160 | Torque limitation skip | P921 | | - | | P923 | |
| G162 | Spindle speed fluctuation detection | P921 | | - | | P923 | |
| G163 | Spindle speed fluctuation detection cancel | P921 | | - | | P923 | |
| G164 | Spindle superimposition control | ○ | | ○ | | P923 | |
| G174 | Simple tool center point control | P941 | | P942 | | P923 | |
| G175 | Simple tool center point control cancel | ○ | | ○ | | P923 | |
| G176 | Simple inclined surface control | P952 | | P951 | | P954 | |
| G180 | Interactive cycle insertion program | P921 | | - | | P923 | |
| G186 | Interference check III Interfering object data enable command | P921 | | - | | P923 | |
| G187 | Thread milling cycle | ○ | | - | | P33 | |
| G189 | Program format switch cancel | ○ | | ○ | | P923 | |

(*1) When the parameter "#1501 polyax" (control axis number of the rotary tool axis) is set to "0", spindle-spindle polygon machining is performed. Otherwise, spindle-NC axis polygon machining is performed.

(*2) The first issued 3-dimensional coordinate conversion command is canceled.

(*3) The last issued command is enabled.

(*4) The synchronous tapping is also included.

(*5) The error type varies depending on the G code format you are using. (The G code format depends on the MTB specifications (parameter "#1265 ext01/bit2").)

- In use of MITSUBISHI CNC special format: Program error (P923)
- In use of the previous format: Program error (P261)

### Note

(1) All the G codes that are not listed in the table are not available.

## Precautions

### Precautions related to arc command

If the first command after the 3-dimensional coordinate conversion command is an arc shape, and the center of the arc did not change before and after the 3-dimensional coordinate conversion, an arc is drawn. However, an error will occur in the following cases:

(1) For the arc in which the arc center is specified with I and J, if the center coordinate has deviated by 3-dimensional coordinate conversion, a program error (P70 Major arc end position deviation) will occur.

```
G90 G28 X0 Z0 Y0 ;
F3000 G17 ;
G68.1 X200. Z0. Y0. I0 K1 J0 R0. ;
G02 X200. I50. ;
```

| No 3-dimensional coordinate conversion | In 3-dimensional coordinate conversion |
|---|---|

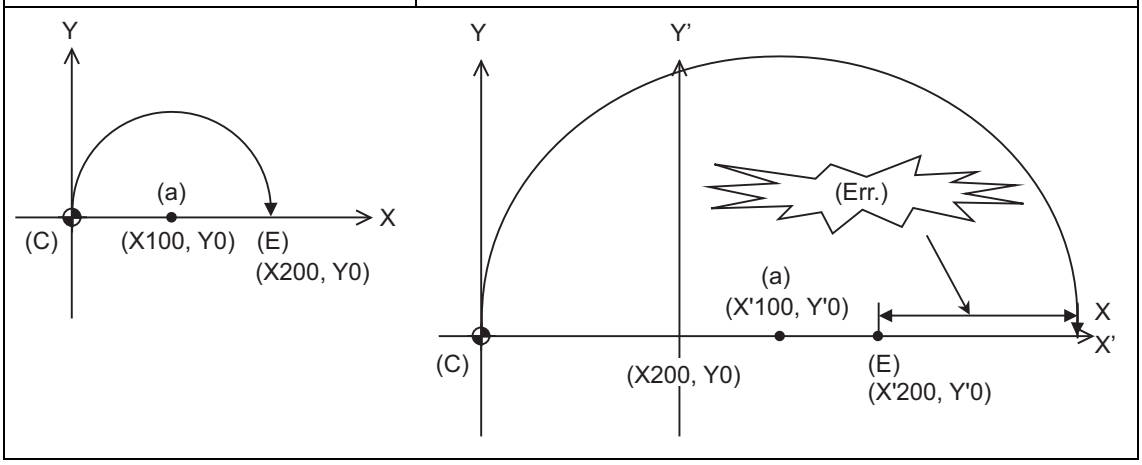


(a) Arc center (C) Current position (E) End point (Err.) Program error

(2) For the arc in which the arc radius is specified with R, if the center coordinate has deviated by 3-dimensional coordinate conversion, a program error (P71 Arc center calculation disabled) will occur.

```
G90 G28 X0 Z0 Y0 ;
F3000 G17 ;
G68.1 X200. Y0. Z0. I0 K1 J0 R0. ;
G02 X200. R50. ;
```

| No 3-dimensional coordinate conversion | In 3-dimensional coordinate conversion |
|---|---|

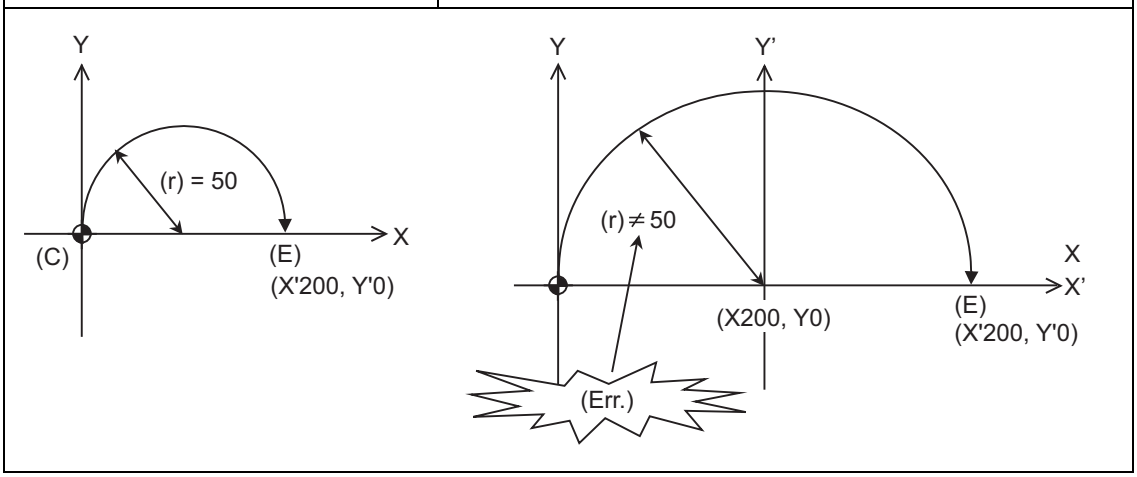


(a) Arc center (C) Current position (E) End point (r) Radius (Err.) Program error

# 20.10 Coordinate Rotation by Program; G68.1/G69.1

## Function and purpose

Coordinate rotation by program is used to rotate the programmed shape by the specified angle and to machine it. Even complex shapes can be easily machined in the rotated position.
This function rotates the coordinate system and realizes mainly drilling and tapping.

## Command format

### Coordinate rotation ON

```
G68.1 X__ Z__ R__ ;
```

| | |
|---|---|
| X, Z | Coordinate values of the rotation center<br>An axis corresponding to the plane selected from the rotation center coordinates X, Y and Z. |
| R | Rotation angle<br>Designate the angle from -360° to 360° in least input increments.<br>The counterclockwise direction on the selected plane is + direction. |

### Coordinate rotation cancel

```
G69.1 ;
```

Select the command plane with G17 to G19.

G68.1 Xx1 Zz1 Rr1 ;

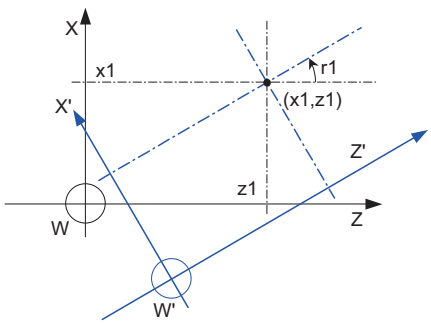


(1) Command the rotation center coordinates (x1, z1) with an absolute position.
(2) Rotate the coordinate counterclockwise by the angle designated in rotation angle r1.
(3) When the minimum setting unit for r1 is 0.001deg, the setting range of rotation angle is -360.000 to 360.000.
When a value out of the range is commanded, a remainder of the value divided by 360° is commanded.

(Ex.) When 400 is commanded, the remainder of 400 minus 360, which is 40, is the commanded angle.

(4) The counter is indicated as the point on the coordinate system prior to rotation.

W: Local coordinate system before rotation
W' : Rotated local coordinate system
r1: Rotation angle
(x1, z1) Rotation center

The following is the example of relationship of program command position and the displayed position.

```
N1 G00 Z50.
N2 G68.1 X100. Z100. R30.;
N3 G00 Z120. ;
```

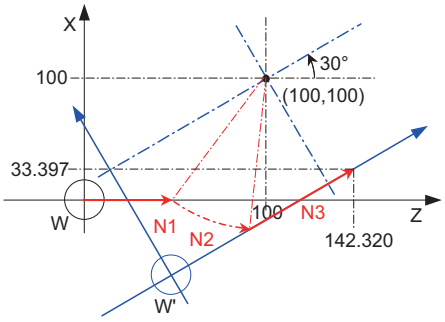


W: Local coordinate system before rotation

W' : Rotated local coordinate system

(1) The program command performs positioning on the local coordinates after the rotation.

(2) The counter display shows the point after the coordinate rotation on the coordinate system before rotation. In this example, the position display when the N3 block is finished is as follows:

X 33.397
Z 142.320

(3) G68.1 command does not carry out the actual movement. Therefore, in this example, it moves linearly from the end point of N1 to the end point of N3.

## Detailed description

(1) G68.1 and G69.1 are the G code of group 16.

(2) Command the rotation center coordinate (x1, z1) with an absolute position. Even if commanded with an incremental address, it will not be handled as an incremental position.

(3) If the rotation center coordinates (x1, z1) are omitted, the position where the G68 command was executed will be the rotation center.

(4) The rotation angle R is commanded with an absolute position. However, it can be commanded with an incremental position if the parameter "#8082 G68.1 R INC" is set.

(5) The performance when the rotation angle R is omitted depends on the setting of parameter "#1270 ext06/bit5":
0: Use the previously commanded value (modal value).
1: Use the set value in "#8081 Gcode Rotat".

If the coordinate rotation mode is canceled by G69.1 command, the modal value will be cleared. If G68.1 is commanded after G69.1 was commanded, the rotation angle becomes 0° by omitting R.
The setting value of the parameter is an absolute position regardless of the setting of the parameter "#8082 G68.1 R INC".

(6) Coordinate rotation by program is a function used on the local coordinate system. The rotated coordinate system is shown as below. (The operation is the same when the parameter setting value is used as the rotation angle R.)

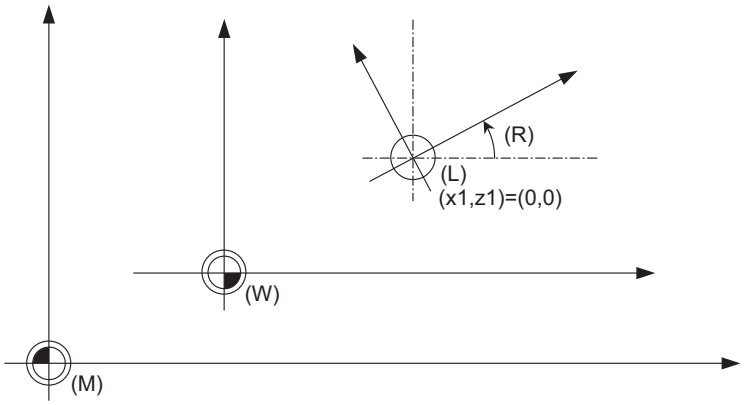


(R) Rotation angle
(L) Local coordinate system
(W) Workpiece coordinate system
(M) Basic machine coordinate system

(7) When the command for coordinate rotation by program is issued during coordinate rotation, it is processed as the changes of center coordinates and rotation angle.

(8) If commanding G68.1 without the coordinate rotation specification, a program error (P260) will occur.

(9) Program error (P111) will occur if the plane selection code is commanded during the coordinate rotation mode.

(10) Coordinate rotation by program is valid only in the automatic operation mode.

(11) G68.1 is displayed on the modal information screen during the coordinate rotation mode. When the mode is canceled, the display changes to G69.1. (The modal value is not displayed for the rotation angle command R.)

### Command for coordinate rotation by program during coordinate rotation

When the command for coordinate rotation by program is issued during coordinate rotation, it is processed as the changes of center coordinates and rotation angle.

(1) For absolute command

G68.1 Xx1 Zz1 Rr1 ;
G68.1 Xx2 Zz2 Rr2 ;

(a) G68.1 Xx1 Zz1 Rr1 ;

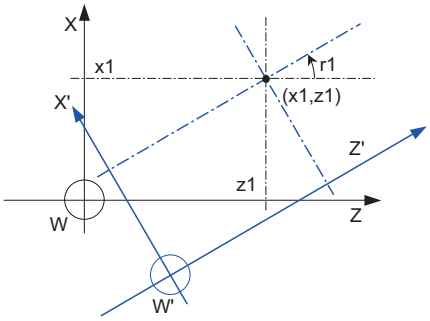


With spinning around on the center coordinate of the rotation (x1, z1), the rotation takes place in the counterclockwise direction by the angle designated in rotation angle r1.

W: Local coordinate system before rotation
W': Local coordinate system after the rotation
r1: Rotation angle
(x1, z1) Rotation center

(b) G68.1 Xx2 Zz2 Rr2 ;

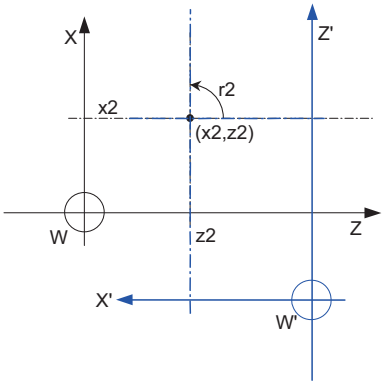


The center coordinate of the rotation switches from (x1, z1) to (x2, z2), and the rotation angle is cleared once. Then the rotation takes place in the counterclockwise direction by the angle designated with r2

W: Local coordinate system before rotation
W': Local coordinate system after the rotation
r2 : Rotation angle
(x2, z2) Rotation center

(2) For incremental command

G68.1 Xx1 Zz1 Rr1 ;
G68.1 Ux2 Uz2 Rr2 ;

(a) G68.1 Xx1 Zz1 Rr1 ;

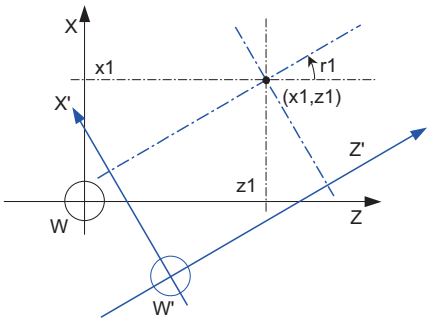


With spinning around on the center coordinate of the rotation (x1, z1), the rotation takes place in the counterclockwise direction by the angle designated in rotation angle r1.

W: Local coordinate system before rotation

W': Local coordinate system after the rotation

r1: Rotation angle

(x1, z1) Rotation center

(b) G68.1 Ux2 Uz2 Rr2 ;

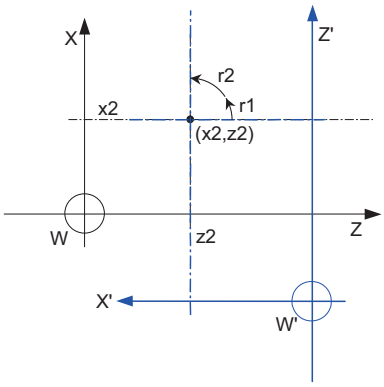


The center coordinate of the rotation switches from (x1, z1) to (x2, z2).
Even if the rotation center coordinate command is the incremental command, it is handled as the absolute position.

The rotation takes place in the counterclockwise direction by the angle rotated at r1 and another angle commanded at r2.

W: Local coordinate system before rotation

W': Local coordinate system after the rotation

r1, r2 : Rotation angle

(x2, z2) Rotation center

## Program example

### Absolute command for coordinate rotation by program

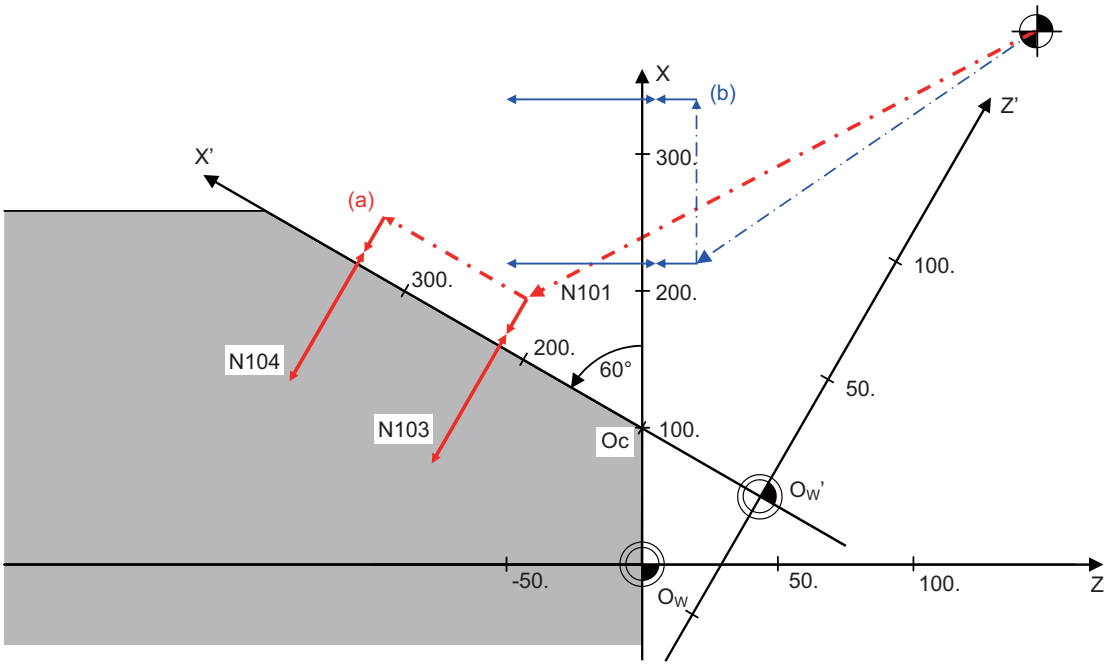


(Oc) Rotation center
(Ow) Workpiece coordinate zero point before rotation
(Ow') Workpiece coordinate zero point after rotation
(a) Subprogram path after rotation
(b) Subprogram path before rotation

[Main program]

```
N01 G97 G18;                    Z-X Plane selection
N02 G91 G28 X0. Z0.;
N03 G54;
N04 G90 T1010;
N05 G68.1 X100. Z0 R60.;        Coordinate rotation ON
N06 M98 H101;                   Subprogram execution
N07 G69.1;                      Coordinate rotation cancel
N08 M02;                        End
```

[Subprogram] (Shape programmed with coordinate system before rotation)

```
N101 G00 X220. Z20.;
N102 G94 S2=1000 M3;            2nd spindle (tool spindle) forward
N103 G98 G83 Z-50. R-15. Q-10. F100;
N104 X340. ;
N105 G80;
N106 S2=0 M5;                   2nd spindle stop
N107 M99;
```

### Operation when only one axis was commanded by the first movement command

Command basically two axes in the rotation plane by an absolute position immediately after the coordinate rotation command.
When commanding one axis only, the following two kinds of operations can be selected by the parameter "#19003 PRG coord rot type".

(1) When "#19003 PRG coord rot type" is "1", the operation is the same as when "N04" is "X50.Z0.". The end point is calculated on the assumption that the start point rotates along with the coordinates' rotation.

```
N01 G18 G91 G28 X0. Z0.;
N02 G90 G92 G53 X0. Z0.;
N03 G68.1 X0. Z40. R90.;      Coordinate rotation ON
N04 Z50.;
N05 X100.;
N06 G69.1;                    Coordinate rotation cancel
N07 M02;                      End
```

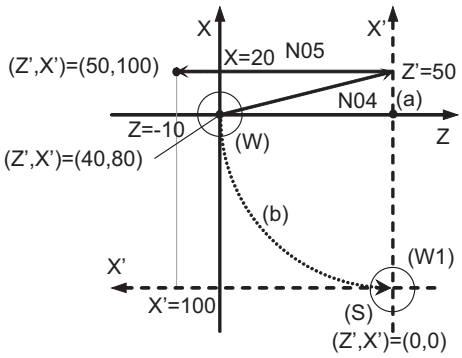


→ Machine movement path (S) Start point
(a) Center of rotation (b) The start point is rotated virtually
(W) Local coordinate system before rotation (W') Local coordinate system after rotation

(2) When "#19003 PRG coord rot type" is "0", only axis commanded in N04 (Z' Axis) is moved. The start point does not rotate along with the coordinate rotation; therefore the end position is calculated based on the current position on local coordinate system before rotation.

```
N01 G18 G91 G28 X0. Z0.;
N02 G90 G92 G53 G0 X0. Z0.;
N03 G68.1 X0. Z40. R90.;      Coordinate rotation ON
N04 Z50.;
N05 X100.;
N06 G69.1;                    Coordinate rotation cancel
N07 M02;                      End
```

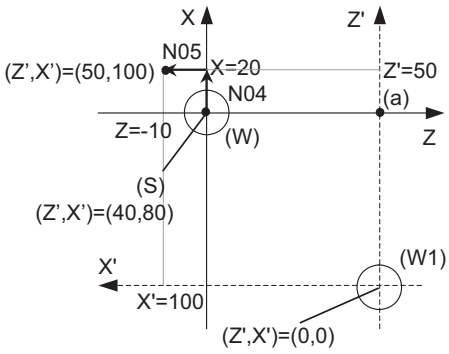


→ Machine movement path (S) Start point
(a) Center of rotation
(W) Local coordinate system before rotation (W') Local coordinate system after rotation

### Local coordinate designation during coordinate rotation by program

(1) When "#19003 PRG coord rot type" is "0", the position commanded on the rotated coordinate system is set as the local coordinate zero point.

(2) When "#19003 PRG coord rot type" is "1", the position commanded on the coordinate system before it is rotated, is set as the local coordinate zero point and the local coordinate will be rotated.

```
N01 G18 G91 G28 X0. Z0.;
N02 G90 G92 G53 G0 X0. Z0.;
N03 G68.1 X0. Z20. R90.;        Coordinate rotation ON
N04 G52 X20. Z10.;              Local coordinate setting
N05 Z20.;
N06 X20.;
N07 G69.1 ;                     Coordinate rotation cancel      W: Workpiece coordinate system
N08 M02 ;                       End                             L : Local coordinate system
```

| | (1) Operation of #19003 = 0 | (2) Operation of #19003 = 1 |
|---|---|---|
| **N03** | 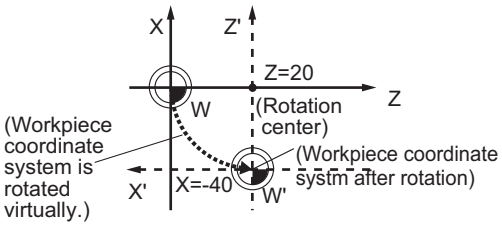 | 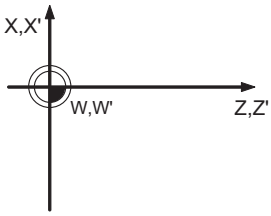 |
| | Workpiece coordinate system is rotated virtually. | Workpiece coordinate system is not rotated. |
| **N04** | 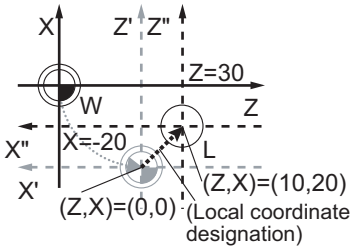 | 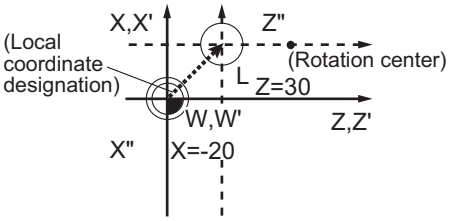 |
| | The workpiece coordinate zero point after rotation is considered as (Z,X)=(0,0).<br>The position after shifted by 10 in the X and 20 in the Y direction is set as the local coordinate zero point.<br>The direction of the shift is not the direction of Z' and X'. | Designate the local coordinate system on the workpiece coordinate system. |
| **N05** | 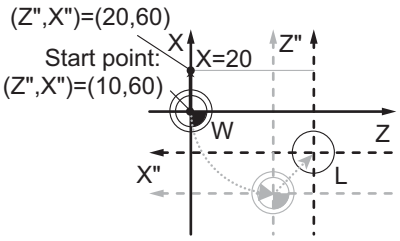 | 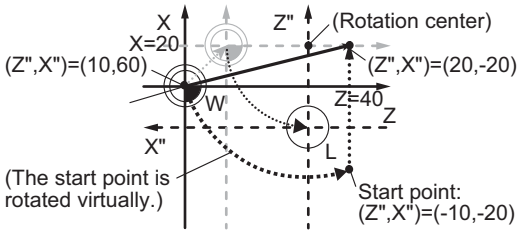 |
| | The commanded axis moves on the rotation coordinate system.<br>Axis without movement command does not move. | The commanded axis moves on the rotation coordinate system.<br>Axis without movement command moves to the position on rotation coordinate system. |
| **N06** | 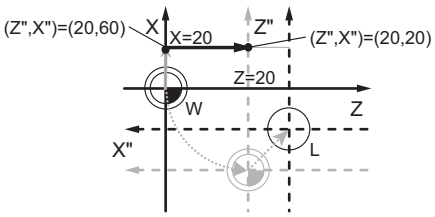 | 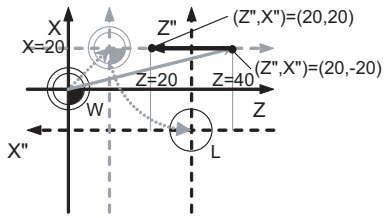 |

### Coordinate system designation during coordinate rotation by program

When the coordinate system setting (G92) is executed during coordinate rotation by program (G68.1), this program operates same as "Local coordinate designation during coordinate rotation by program".

(1) When "#19003 PRG coord rot type" is "0", the position is preset to the current position commanded on the rotated coordinate system.

(Example) Setting on the coordinate system (Z' -X') after rotation

Position after rotation　　Commanded position

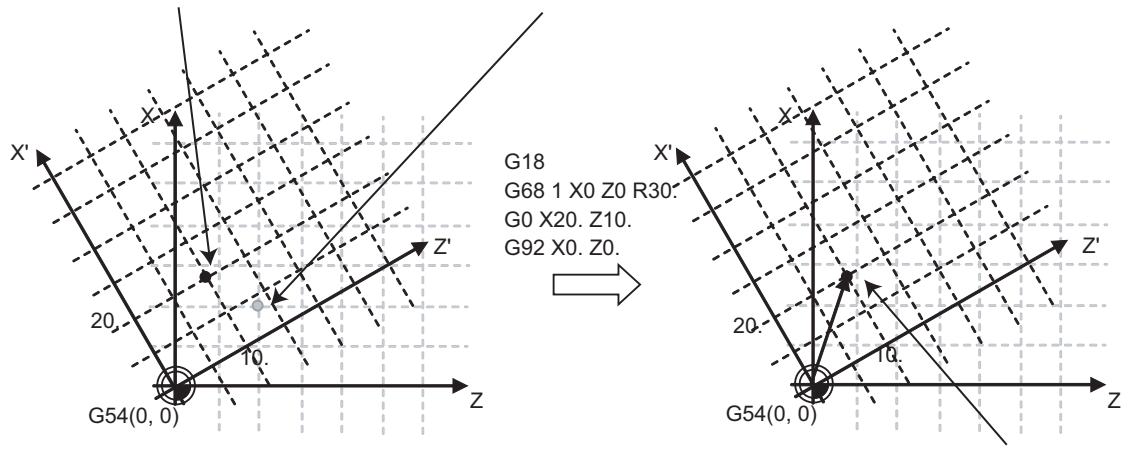


G92 shift amount

(2) When "#19003 PRG coord rot type" is "1", the position is preset to the current position commanded on the coordinate system before rotation. The coordinate system is rotated after the position is commanded.

(Example) Setting on the coordinate system (Z-X) after rotation

Position after rotation　　Commanded position

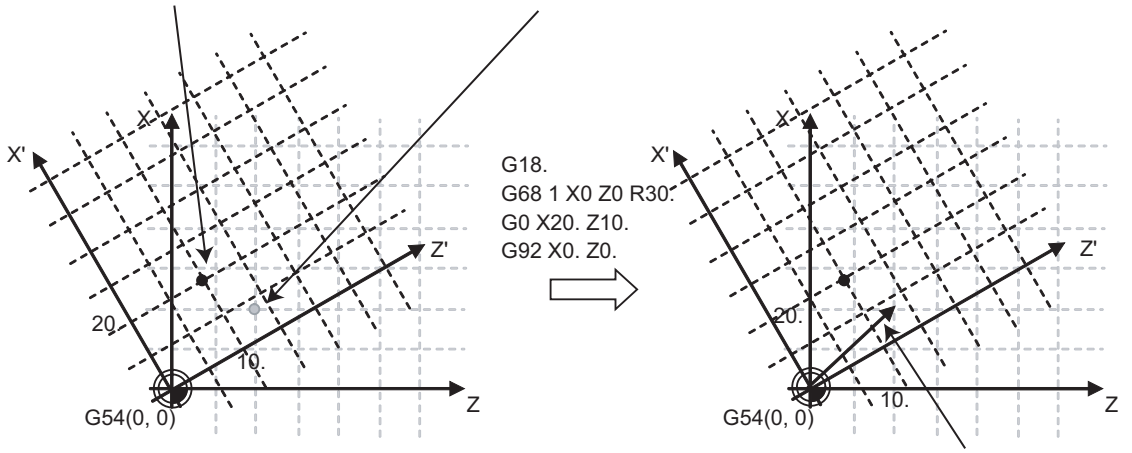


G92 shift amount

**Note**

(1) When "#19003 PRG coord rot type" is "1"and the coordinate system setting (G92) is executed during coordinate rotation by program, the rotation center of the coordinate is not shifted.
(It stays at the same position in respect to the basic machine coordinate system.)

### Operation when circular interpolation is commanded after commanding rotation

Basically, command two axes in the rotation plane by positioning/linear interpolation with an absolute position immediately after the coordinate rotation command.

When commanding the circular interpolation, command the movement by positioning/linear interpolation to the start point even if the axis does not move.

When the circular interpolation is commanded straight after the coordinate rotation command, the following operation takes place depending on the setting of the parameter "#19003 PRG coord rot type".

(1) When "#19003 PRG coord rot type" is "1", the start point position which was assumed to be rotated with the coordinate rotation and the actual axis position are positioned in a different position in respect to the basic machine coordinate system. Consequently, the axis cannot move along with the circular path between the start point and the end point, and a program error (P70) will occur.

```
N01 G18 G91 G28 X0. Z0.;
N02 G90 G92 G53 G0 X0. Z0.;
N03 G68.1 X0. Z40. R90.;        Coordinate rotation ON
N04 G03 X-40. Z20. R20. F500;
N05 G00 X50.;
N06 G69.1;                      Coordinate rotation cancel
N07 M02 ;                       End
```

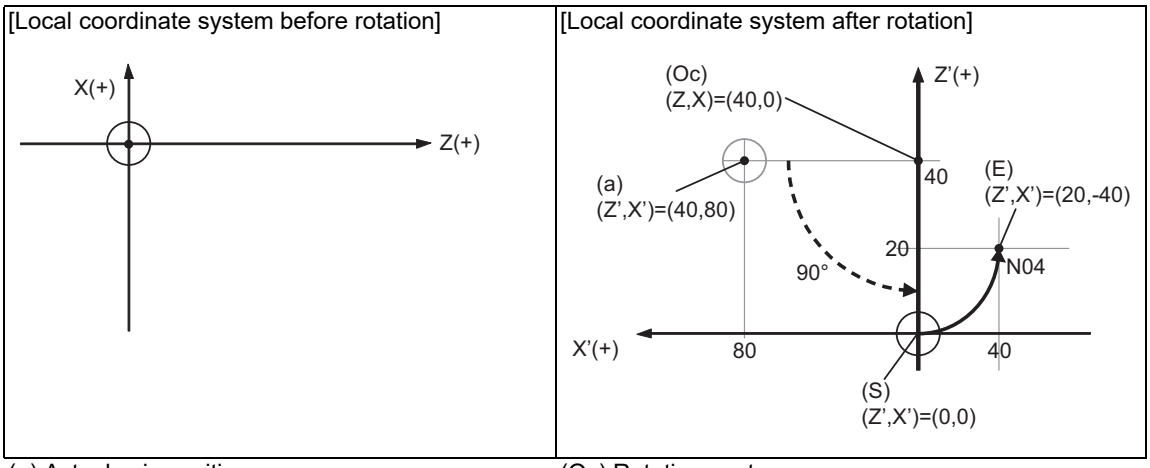


(a) Actual axis position (Oc) Rotation center

(S) Start point (*1) (E) End point

(*1) Start point which was assumed to be rotated with the coordinate rotation

(2) When "#19003 PRG coord rot type" is "0", the circular interpolation start point does not rotate with the coordinate rotation. It remains in the same position before the coordinate rotation in respect to the basic machine coordinate system. Consequently, the axis operates the circular interpolation from this start point to the end point.

```
N 01 G18 G91 G28 X0. Z0.;
N 02 G90 G92 G53 G0 X0. Z0.;
N 03 G68.1 X0. Z40. R90.;        Coordinate rotation ON
N 04 G03 X40. Z20. R20. F500;
N 05 G00 X50.;
N06 G69.1;                       Coordinate rotation cancel
N07 M02 ;                        End
```

[Local coordinate system before rotation]

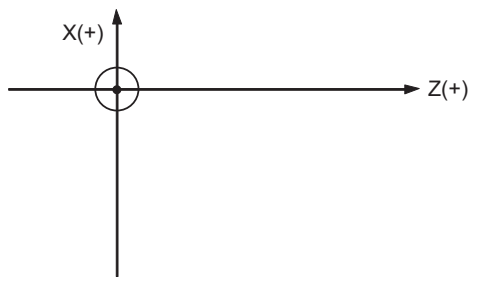


[Local coordinate system after rotation]

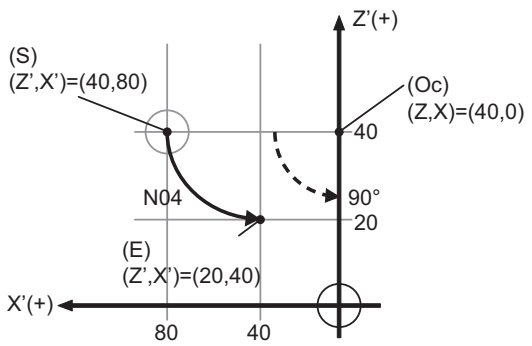


(Oc) Rotation center

(S) Start point

(E) End point

## Relationship with Other Functions

(1) The tool compensation during the coordinate rotation mode is carried out in the local coordinate system after the coordinate rotation.

(2) During the coordinate rotation mode, the mirror image performs reverse processing of the point after the coordinate rotation is inverted in the coordinate system before the coordinate rotation.

(3) For all position display, points after the coordinate rotation are displayed in the coordinate system before the rotation.

(4) Similarly for the system variable of the coordinate value, points after the coordinate rotation are displayed in the coordinate system before the rotation.

(5) The coordinates can also be rotated for the parallel axis. Select the plane that contains the parallel axis before issuing the G68.1 command. (The plane which contains the parallel axis cannot be selected in the same block as the G68.1 command.)

(6) Program error (P485) will occur if pole coordinate interpolation/milling interpolation is commanded during the coordinate rotation mode.

(7) Program error (P481) will occur if the coordinate rotation is commanded during the polar interpolation/milling interpolation mode.

(8) Program error (P485) will occur if cylindrical interpolation is commanded during the coordinate rotation mode.

(9) Program error (P481) will occur if coordinate rotation is commanded during the cylindrical interpolation mode.

(10) Program error (P34) will occur if the workpiece coordinate system preset (G92.1) is commanded during the coordinate rotation mode.

(11) A system variable can read the skip coordinate value when the skip command is issued during the coordinate rotation. The system variable reads the workpiece coordinate value after the coordinate conversion.
When the multiple axes move for one axis movement command, the skip coordinate value is read by the multiple axes.

(12) Program error (P261) will occur if the coordinate rotation and other G code are commanded in the same block. However, when a G code is combined with either of the following functions, the program error differs from P261.

| | |
|---|---|
| Control axis synchronization between part systems start/end<br>Control axis superimposition start/end | Program error (P33) |
| Mixed control (Cross axis control) | Program error (P503) |

(13) Program error (P34) will occur if the following functions are commanded during coordinate rotation:
- Mixed control (Cross axis control)
- Axis name switch
- Control axis synchronization between part systems start/end
- Control axis superimposition start/end
- Thread cutting
- Variable lead thread cutting
- Circular thread cutting
- Fixed cycle for turning machining
- Compound type fixed cycle for turning machining
- Multi-part system simultaneous thread cutting cycle
- User macro modal call B
- Mirror image for facing tool posts
- Balance cut

(14) Program error (P111) will occur if the following functions are commanded during coordinate rotation:
- Plane selection (X-Y, Z-X, Y-Z)
- Milling interpolation plane selection Y-Z cylindrical plane

(15) Program error (P262) will occur if the coordinate rotation is commanded during the following G code modal:
- Thread cutting
- Variable lead thread cutting
- Circular thread cutting
- Fixed cycle for turning machining
- Compound type fixed cycle for turning machining
- Multi-part system simultaneous thread cutting cycle
- Fixed cycle for drilling
- User macro
- User macro modal call A, B
- Mirror image for facing tool posts
- Balance cut

(16) Tapping cycle can be carried out during the coordinate rotation mode. This enables the tapping diagonally. Refer to "Face tapping cycle (longitudinal tapping cycle);G84(G88)" for details on tapping cycle.

```
G68.1 Xx1 Zz1 Rr1 ;
      ·
      ·
G84 Zz2 Rr2 Ff Ss ,Rr ;
      ·
      ·
```

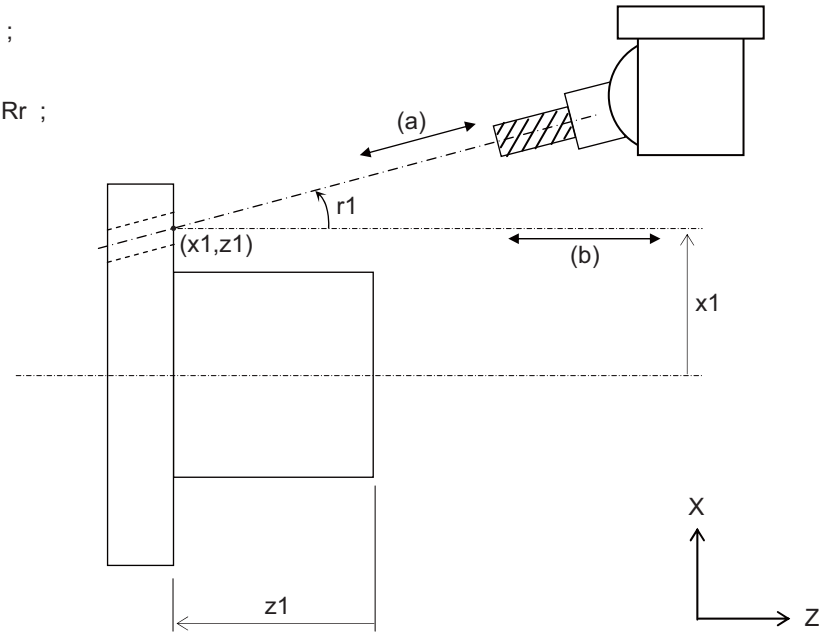


(a): Actual movement direction
(b): Movement direction with program command
r1: Rotation angle
(x1, z1): Rotation center

(16-1) Feedrate/pitch command (F command)

- The F command value specified with the machining program is as follows:
  Asynchronous tap: Feedrate toward the tap cutting direction (diagonally)
  Synchronous tap: Pitch toward the tap cutting direction (diagonally)

(16-2) Programmable in-position check

- In-position check takes place on two axes as two axes move during tapping diagonally.
- Each axis is checked, and the in-position check is complete when both of two axes come into the commanded in-position width.

(16-3) Tapping retract

- Tapping return can be carried out by the tapping return signal (1st part system: YC5C, 2nd part system: YD9C) for diagonal cutting.
- Tap cutting axes (two axes moved during tap cutting) move toward the initial point.
- For multiple spindle control II ("#1300 ext36/bit0" is set to "1"), select the spindle when the tapping cycle is interrupted before turning ON the tapping return signal.
  The error "M01 operation error 1032" will occur if the tapping return is carried out while a different spindle is being selected.

(16-4) Servo gain during the synchronous tapping cycle

- When diagonal synchronous tapping is carried out, the setting value of "#2017 tap_g" is the servo gain of two axes which move during tap cutting.

(16-5) Specify boring axis (#1080 Dril_Z)

- When "#1080 Dril_Z" is set to "1", the tapping cycle during coordinate rotation mode can be carried out only when G17 plane is being selected.
  Program error (P111) will occur if the tapping cycle is commanded while G18 or G19 is being selected.

  <Note>

  - "#1080 Dril_Z" is valid when MITSUBISHI CNC special format ("#1265 ext01/bit2" is set to "1") is applied.

(16-6) Precautions for synchronous tapping cycle

- Set the same value for the servo gain ("#2017 tap_g") of two axes which move during tap cutting.
- Do not issue a command which moves the inclined axis during tap cutting.

(17) Program error (P612) will occur when the exponential interpolation is commanded during coordinate rotation by program.

## Precautions

(1) Command G68.1 alone in a block. Program error (P261) will occur if it is not commanded alone in a block.

(2) If an axis which is not in the selected plane is commanded to the coordinate value of the rotation center, axes in other than the selected plane moves to the position which is specified by the last G01 modal.

(3) Always command an absolute position for the movement command immediately after G68.1 and G69.1.
If an increment position is commanded, it may not move to the intended position.
Also command it together with the axis address on the selected plane (for G18 plane, Z-X).
If it is omitted, that axis is handled as "no movement command".

(4) If the manual absolute is ON and interrupted the coordinate rotary axis, then, do not use automatic operation for the following absolute command.

(5) The intermediate point during reference position return is the position after the coordinates are rotated.

(6) If the workpiece coordinate system offset amount is changed during coordinate rotation by program, the rotation center of the coordinate will be shifted. (The center will follow the coordinate system.)

(7) If workpiece coordinate system setting (G92) is executed during coordinate rotation by program, the rotation center of the coordinate will not be shifted. (The same position in respect to the basic machine coordinate system)

(8) If the workpiece coordinates are changed (ex. from G54 to G55) during coordinate rotation by program, the rotation center of the coordinate will be the position on the coordinate system which the command was issued. (The same position in respect to the basic machine coordinate system)

(9) If coordinate rotation is executed to the G00 command for only one axis during the coordinate rotation mode, two axes will move. If the parameter "#1086 G0Intp" is set to "1", the interpolation is carried out.

(10) If a synchronous tapping is commanded during the coordinate rotation mode in inclined axis control, a normal synchronous tapping is applied even if the high-speed synchronous tapping function is enabled. (The availability of the high-speed synchronous tapping function depends on the MTB specifications (parameter "#1281 ext17/bit5").

(11) During coordinate rotation by program and machine lock on a axis of vertical/horizontal axes of selected plane, normal synchronous tapping is applied even if high-speed synchronous tapping function is enabled. (The availability of the high-speed synchronous tapping function and coordinate system rotation depend on the MTB specifications (parameter "#1281 ext17/bit5").

(12) For synchronous tapping cycle during the coordinate rotation mode, in-position check executed at a hole bottom or R point is disabled.

# 20.11 Reference Position (Zero Point) Return; G28, G29

## Function and purpose

After the commanded axes have been positioned by G0, they are returned respectively at rapid traverse to the first reference position when G28 is commanded.
By commanding G29, the axes are first positioned independently at high speed to the G28 or G30 intermediate point and then positioned by G0 at the commanded position.

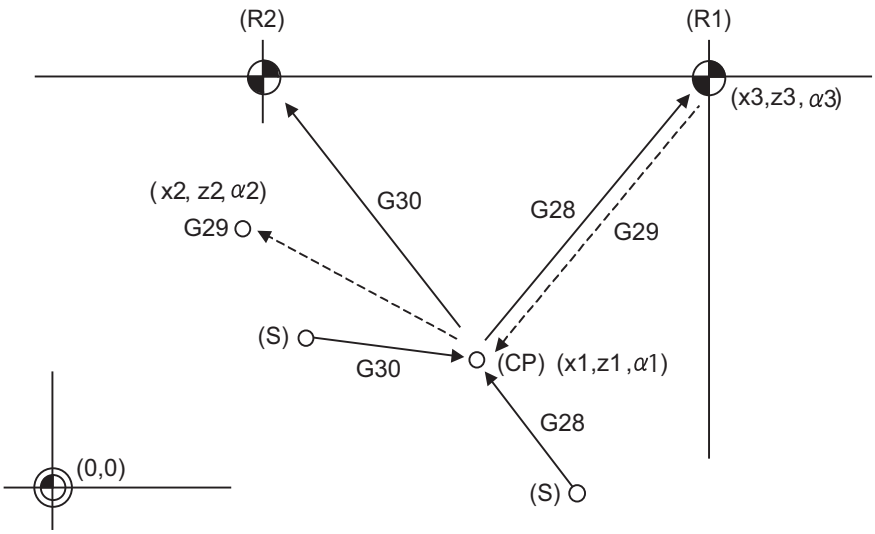


(R1) 1st reference position
(R2) 2nd reference position
(S) Start point
(CP) Intermediate point

## Command format

| |
|---|
| **G28 Xx1 Zz1 αα1; ... Automatic reference position return** |

| | |
|---|---|
| X, Z, α | Coordinate value of the intermediate point (α is an additional axis) |

| |
|---|
| **G29 Xx2 Zz2 αα2; ... Start point return** |

| | |
|---|---|
| X, Z, α | Coordinate value of the end point (α is an additional axis) |

## Detailed description

(1)The G28 command is equivalent to the following:
G00 Xx1 Zz1 αα1 ;G00 Xx3 Zz3 αα3 ;
where x3, z3 and α3 are the coordinate values of the reference position which are set in parameters "#2037 G53ofs" for the distance from the basic machine coordinate system zero point as specified by the MTB.

(2)After the power has been switched on, the axes which have not been subject to manual reference position return are returned by the dog type of return just as with the manual type. In this case, the return direction is regarded as the command sign direction. For the second and subsequent returns, the return is made at high speed to the reference position which was stored at the first time.

(3)When reference position return is completed, the zero point arrival output signal is output and also #1 appears at the axis name line on the setting and display unit screen.

(4)The G29 command is equivalent to the following:
G00 Xx1 Zz1 αα1 ;
G00 Xx2 Zz2 αα2 ;
The rapid traverse (non-interpolation type) independent for each axis takes place.
In this case, x1, z1 and α1 are the coordinate value of the G28 or G30 intermediate point.

(5)Program error (P430) occurs when G29 is executed without executing automatic reference position (zero point) return (G28) after the power has been turned ON.

(6)The intermediate point coordinate values (x1, z1, α1) of the positioning point are assigned by absolute/incremental commands.

(7)G29 is valid for either G28 or G30 but the commanded axes are positioned after a return has been made to the latest intermediate point.

(8)The tool offset will be temporarily canceled during reference position return unless it is already canceled, and the intermediate point will be the compensated position.

(9)The intermediate point can be ignored by parameter "#1091 Ignore middle point" setting.

(10)Control from the intermediate point to the reference position is ignored for reference position return in the machine lock status. When the designated axis reaches as far as the intermediate point, the next block will be executed.

(11)Mirror image is valid from the start point to the intermediate point during reference position return in the mirror image mode and the tool will move in the opposite direction to that of the command. However, mirror image is ignored from the intermediate point to the reference position and the tool will move to the reference position.

(12)Do not issue T commands in a block where G29 exits. Program error (P29) occurs if the workpiece compensation amounts differ between the current and the previous blocks.

(13)When G28/G29/G30 is commanded in single block mode, if "#1279 ext15/bit6 Enable single block stop at middle point" is set to "1", single block stop at middle point will be performed; single block stop at middle point will not be performed if set to "0".

(14)If the mode is switched to MDI mode or reference position return mode while in a single block stop at the interim position, an operation error (M01 0013) occurs.

(15)If the NC is reset while in a single block stop at middle point, the interim position for G29 start position return will not be updated.

(16)If a miscellaneous function is commanded in the same block as G28/G29, the miscellaneous function completion waiting point will be the end of commanded movement, instead of the interim position.

(17) If the PLC interrupt operation is operated while in a single block stop at the interim position, an operation error (M01 0129) occurs.

### Program example

(Example 1) G28 Xx1 Zz1 ;

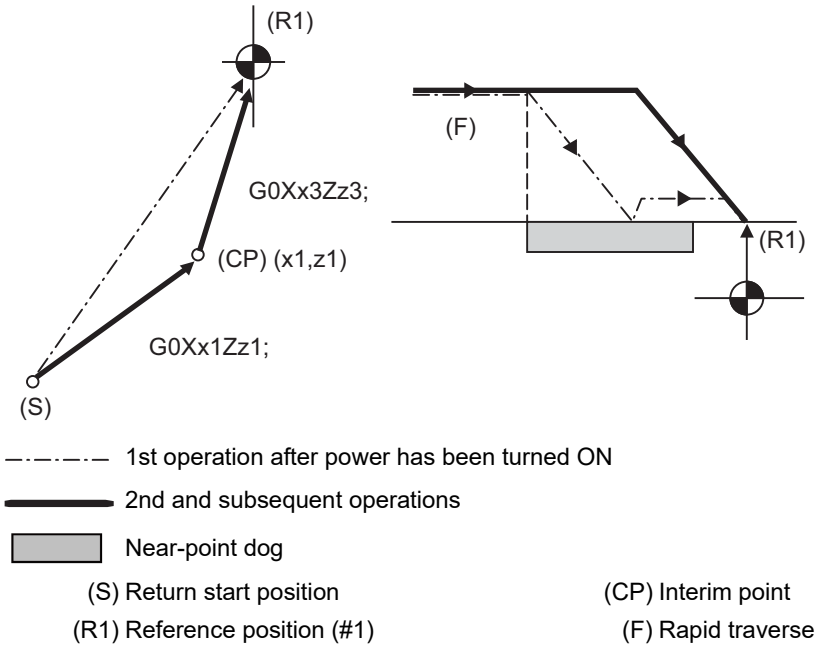


(S) Return start position
(CP) Interim point
(R1) Reference position (#1)
(F) Rapid traverse rate

(Example 2) G29 Xx2, Zz2 ;

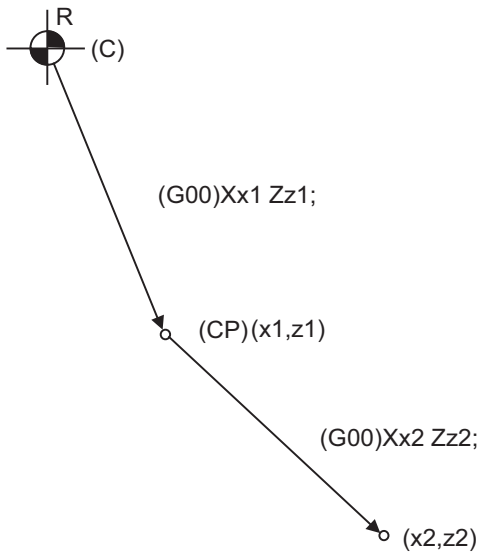


(C) Current position
(CP) G28, G30 Intermediate point

(Example 3) G28 Xx1 Zz1 ;
: (From point A to 1st reference position)
:
G30 Xx2 Zz2 ;
: (From point B to 2nd reference position)
:
G29 Xx3 Zz3 ;
(From point C to point D)

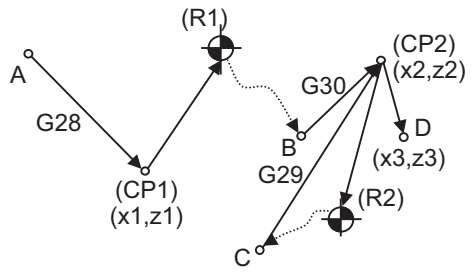


(CP1) Old intermediate point
(CP2) New intermediate point
(R1) Reference position (#1)
(R2) 2nd reference position (#2)

# 20.12 2nd, 3rd, and 4th Reference Position (Zero Point) Return ; G30

## Function and purpose

The tool can return to the second, third, or fourth reference position by specifying G30 P2 (P3 or P4).

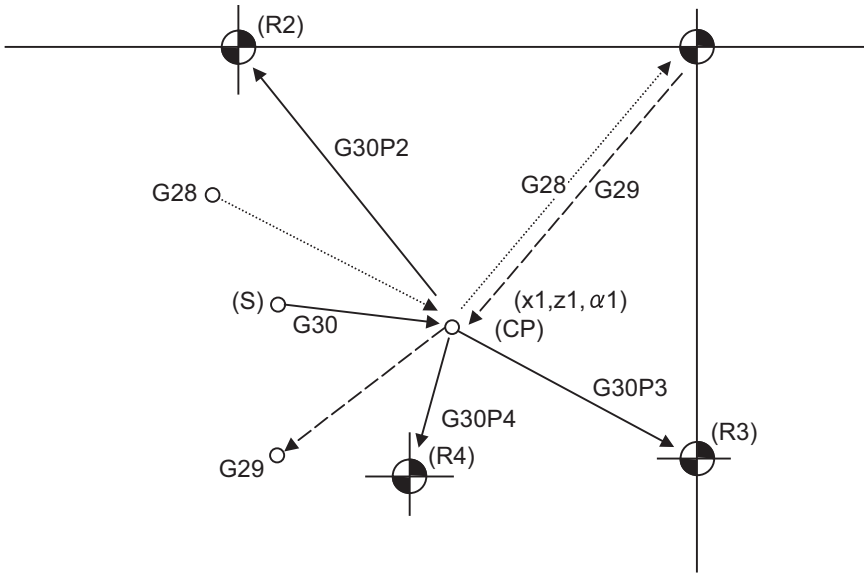


(S) Start point
(CP) Intermediate point
(R2) 2nd reference position
(R3) 3rd reference position
(R4) 4th reference position

## Command format

| |
|---|
| **G30 P2 (P3, P4) X__ Z__ α__ ;** |

| | |
|---|---|
| X, Z, α | Coordinate value of the intermediate point (α is an additional axis) |
| P | Reference position No.<br>P2: 2nd reference position return<br>P3: 3rd reference position return<br>P4: 4th reference position return |

## Detailed description

(1) The 2nd, 3rd, or 4th reference position return is specified by P2, P3, or P4.
A command without P or with other designation method will return the tool to the 2nd reference position.

(2) In the 2nd, 3rd, or 4th reference position return mode, as in the 1st reference position return mode, the tool returns to the 2nd, 3rd, or 4th reference position via the intermediate point specified by G30.

(3) The 2nd, 3rd, and 4th reference position coordinates refer to the positions specific to the machine, and these can be checked with the setting and display unit.

(4) If G29 is commanded after completion of returning to the 2nd, 3rd, and 4th reference position, the intermediate position used last is used as the intermediate position for returning by G29.

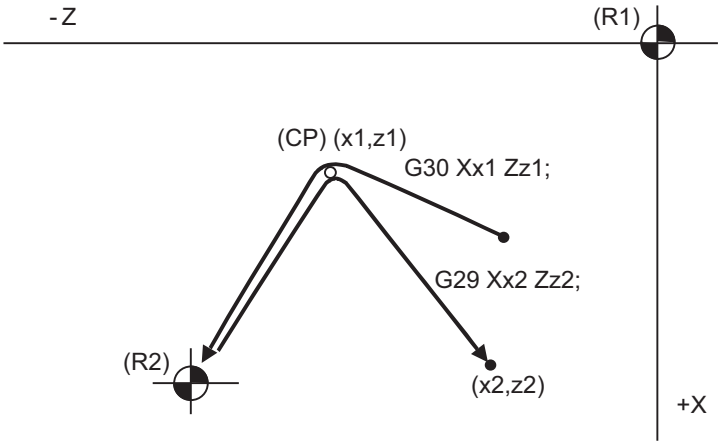


(CP) Intermediate point

(R1) 1st reference position (R2) 2nd reference position

(5) With reference position return on a plane during compensation, the tool moves without nose R compensation (zero compensation) from the intermediate point as far as the reference position. With a subsequent G29 command, the tool move without nose R compensation from the reference position to the intermediate point and it moves with such compensation until the G29 command from the intermediate point.

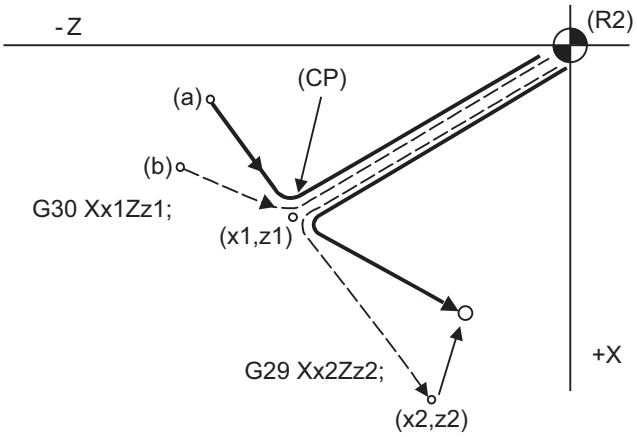


(a) Tool nose center path (b) Program path

(CP) Intermediate point

(R1) 1st reference position (R2) 2nd reference position

(6) The tool length offset amount for the axis involved is temporarily canceled after the 2nd, 3rd and 4th reference position return.

(7) With second, third and fourth reference position returns in the machine lock status, control from the intermediate point to the reference position will be ignored. When the designated axis reaches as far as the intermediate point, the next block will be executed.

(8) With second, third and fourth reference position returns in the mirror image mode, mirror image will be valid from the start point to the intermediate point and the tool will move in the opposite direction to that of the command. However, mirror image is ignored from the intermediate point to the reference position and the tool moves to the reference position.

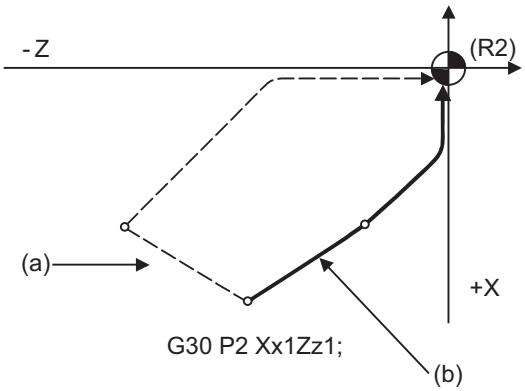


(a) X-axis mirror image
(b) No mirror image
(R2) 2nd reference position

(9) If the 2nd, 3rd or 4th reference position is changed while G30 zero point return operation is in pause due to an interlock, "M01 Operation Error" occurs.

(10) When G28/G29/G30 is commanded in single block mode, if "#1279 ext15/bit6 Enable single block stop at middle point" is set to "1", single block stop at middle point will be performed; single block stop at middle point will not be performed if set to "0".

(11) If the mode is switched to MDI mode or reference position return mode while in a single block stop at the interim position, an operation error (M01 0013) occurs.

(12) If the NC is reset while in a single block stop at middle point, the interim position for G29 start position return will not be updated.

(13) If a miscellaneous function is commanded in the same block as G30, the miscellaneous function completion waiting point will be the end of commanded movement, instead of the interim position.

(14) If the PLC interrupt operation is operated while in a single block stop at the interim position, an operation error (M01 0129) occurs.

# 20.13 Tool Change Position Return ; G30.1 - G30.5

## Function and purpose

By specifying the tool change position in a parameter "#8206 tool change" and also specifying a tool change position return command in a machining program, the tool can be changed at the most appropriate position.
The axes that are going to return to the tool change position and the order in which the axes begin to return can be changed by commands.

## Command format

**Tool change position return**

| |
|---|
| **G30.n ;** |

| |
|---|
| n = 1 to 5: Specify the axes that return to the tool change position and the order in which they return. |

## Detailed description

Commands and return order are given below.

| Command | Return order |
|---|---|
| G30.1 | X axis only (-> additional axis) |
| G30.2 | Z axis only (-> additional axis) |
| G30.3 | X axis -> Z axis (-> additional axis) |
| G30.4 | Z axis -> X axis (-> additional axis) |
| G30.5 | X axis - Z axis (-> additional axis) |

<Note>

- An arrow ( ->) indicates the order of axes that begin to return. An period ( - ) indicates that the axes begin to return simultaneously. (Example: "Z axis -> X axis" indicates that the Z axis returns to the tool change position, then the X axis does.)

(1) Whether the tool exchange position return for the additional axis is enabled or disabled depends on the MTB specifications (parameter "#1092 Tchg_A").
For the order for returning to the tool change position, the axes return after the standard axis completes the return to the tool change position (refer to above table). For specifications having two additional axes, the two additional axes simultaneously return to the tool change position after the standard axis has finished its return to the tool change position.
The additional axis alone cannot return to the tool change position.

(2) If the axis address is commanded in the same block as the tool change position return command, a program error (P33) will occur.

(3) When additional axes have also completed their tool change position return commanded by G30.n, the tool change position return completion signal TCP (XC93) turns ON. When an axis out of those having returned to the tool change position by a G30.n command leaves the tool change position, the TCP signal is turned OFF. (With a G30.3 command, for example, the TCP signal is turned ON when the Z axis has reached the tool change position after the X axis did (after the additional axis did if additional axis tool change position return is valid)). The TCP signal is then turned OFF when the X or Z axis leaves the position. If tool change position return for additional axes is ON with parameter "#1092 Tchg_A", the TCP signal is turned ON when the additional axis or axes have reached the tool change position after the standard axes did. It is then turned OFF when one of the X, Z, and additional axes leaves the position.)

[TCP signal output timing chart] (G30.3 command with tool change position return for additional axes set ON)

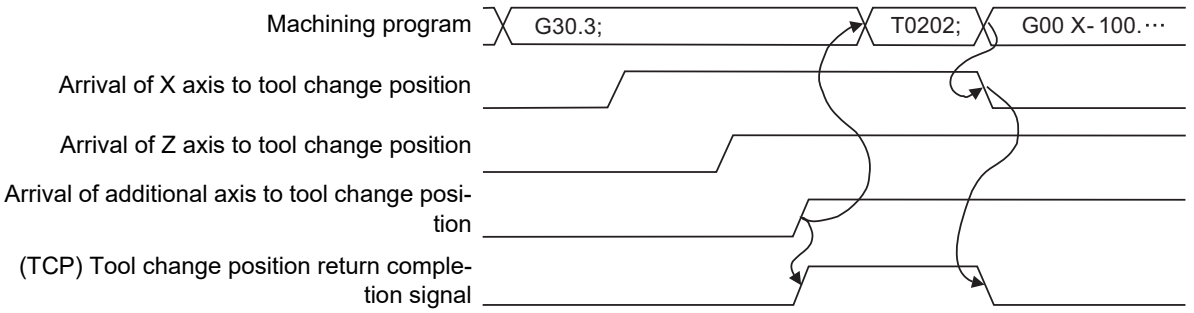


(4) Tool compensation data such as tool length offset and tool nose wear compensation are temporarily canceled by the tool change position return command. The machine moves to the tool change position set in the parameters, but because the tool compensation amount is stored in the memory, it moves by the next movement command to a position with the tool compensation applied.

(5) This command is executed by dividing blocks for every axis. If this command is issued during single-block operation, therefore, a block stop occurs each time one axis returns to the tool change position. To make the next axis tool change position return, therefore, a cycle start needs to be specified.

## Operation example

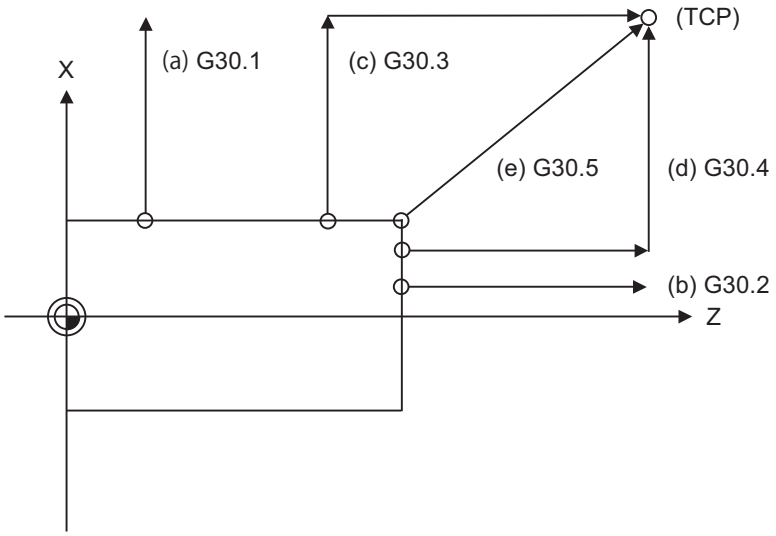


TCP : Tool change position

(a) G30.1 command: X axis only returns to the tool change position. (If the tool change position return is validated for the additional axis, the additional axis also returns to the tool change position after the X axis reaches the tool change position.)

(b) G30.2 command: Z axis only returns to the tool change position. (If the tool change position return is validated for the additional axis, the additional axis also returns to the tool change position after the Z axis reaches the tool change position.)

(c) G30.3 command : X axis returns to the tool change position, then Z axis does the same thing. (If the tool change position return is validated for the additional axis, the additional axis also returns to the tool change position after the X and Z axes reached the tool change position.)

(d) G30.4 command : Z axis returns to the tool change position, then X axis does the same thing. (If the tool change position return is validated for the additional axis, the additional axis also returns to the tool change position after the Z and X axes reache the tool change position.)

(e) G30.5 command : X and Z axes return to the tool change position simultaneously. (If the tool change position return is validated for the additional axis, the additional axis also returns to the tool change position after the Z and X axes reached the tool change position.)

# 20.14 Reference Position Check; G27

## Function and purpose

This command first positions the tool at the position assigned by the program and then, if that positioning point is the 1st reference position, it outputs the reference position arrival signal to the machine in the same way as with the G28 command. Therefore, when a machining program is prepared so that the tool will depart from the 1st reference position and return to the 1st reference position, it is possible to check whether the tool has returned to the reference position after the program has been run.

## Command format

**G27 X__ Z__ α__ P__ ; ... Check command**

| | |
|---|---|
| X Z α | Return control axis |
| P | Check No.<br>P1: 1st reference position check<br>P2: 2nd reference position check<br>P3: 3rd reference position check<br>P4: 4th reference position check |

## Detailed description

(1) If the P command has been omitted, the 1st reference position will be checked.

(2) The number of axes whose reference positions can be checked simultaneously depends on the number of axes which can be controlled simultaneously.

(3) An alarm will occur if the reference position is not reached after the command is completed.

# 21

# Protection Function

# 21.1 Chuck Barrier/Tailstock Barrier ; G22,G23

## Function and purpose

By limiting the tool nose movement range, the chuck barrier and tailstock barrier prevent collision with the chuck and tailstock due to programming errors. If movement is commanded which exceeds the region set by the parameters, the tool will automatically stop at the barrier boundary.

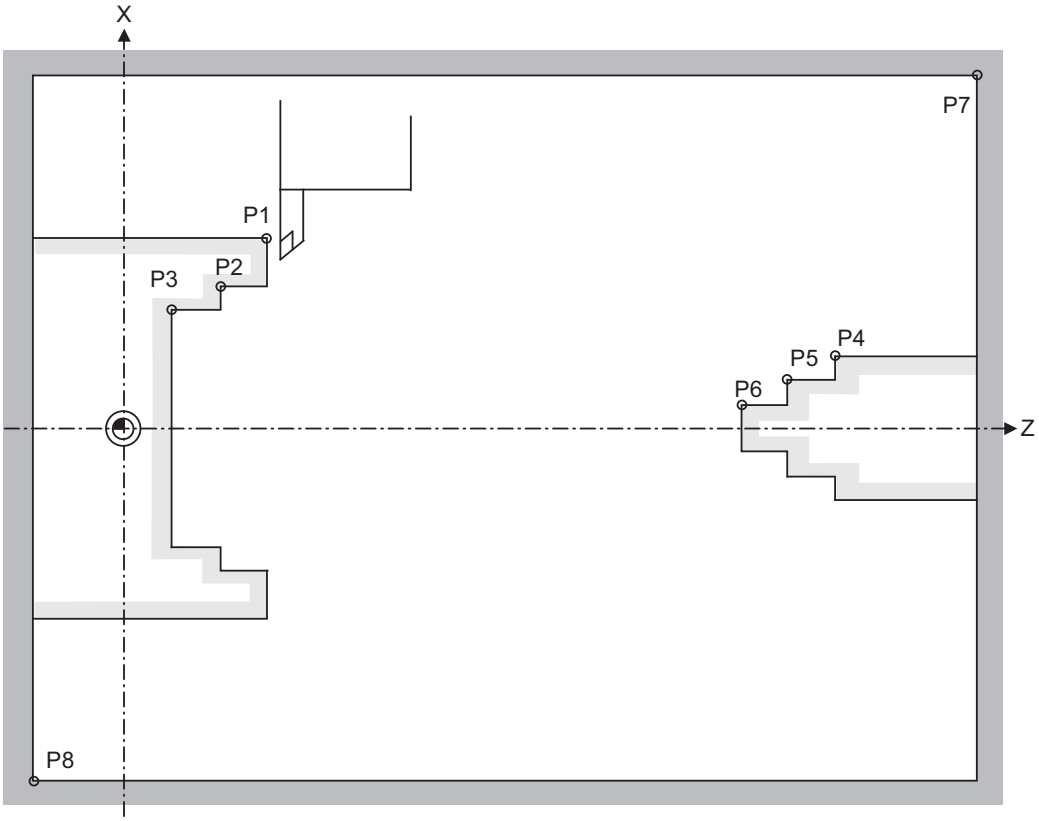


P1,P2,P3 : Chuck barrier
P4,P5,P6 : Tailstock barrier
P7,P8 : Stored stroke limit

## Command format

**G22 ; ... Barriers valid**

**G23 ; ... Barriers invalid**

G22 or G23 must be commanded alone in a block.

## Detailed description

(1) An alarm will appear at the same time as the machine stops because it was about to exceed the set region. Reset to cancel this alarm.

(2) This function is also valid during machine lock.

(3) This function is validated when all axes in which chuck barrier and tailstock barrier are set have finished their reference position returns.

(4) When there is a stored stroke check function, and the stored stroke limit region is set, the chuck barrier/tailstock barrier function is validated simultaneously with the stored stroke check function.

(5) A detailed barrier can be set on the left and right by using the PLC signal. This depends on the MTB specifications.

### Setting when using G22 and G23

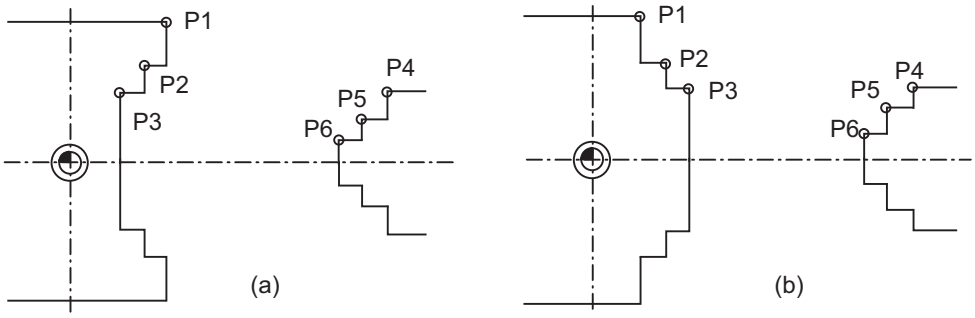


(1) Three points can be input as parameters for both the chuck barrier and tailstock barrier. Set them in the machine coordinate system.
Points P1, P2 and P3 (parameters "#8301 P1" to "#8303 P3") are for the chuck barrier. Points P4, P5 and P6 (parameters "#8304 P4" to "#8306 P6") are for the tailstock barrier.

(2) The barrier region should be a symmetric shape regarding the Z axis. When the X axis coordinates of barrier point P_ are a negative value, reverse the sign to the positive side, then convert and check.
The absolute value of each barrier point's X axis coordinates must be set as follows.

P1 >= P2 >= P3,  P4 >= P5 >= P6

(Note that the Z axis coordinates do not have to follow this setting.)

### Setting when using the PLC external signal input

Set the coordinate values for each point between "#8300 P0" to "#8314 P10".
P0 is the basic X coordinate of the chuck and tailstock barrier. Set the workpiece center coordinate in the basic machine coordinate system as a radius value.
The coordinate value from the workpiece center (P0) is set as a radius value for the P1 to P10 X axes. The Z axis is set as a basic machine coordinate system coordinate.
The barrier region is symmetrical in respect to P0.
The X axis coordinate of each point must be set in the following manner.

P1 >= P2 >= P3, P4 >= P5 >= P6,
P7 >= P8, P9 >= P10

If the P8 Z axis coordinate must be less than P1 to P3, and the P10 Z axis coordinate must be more than P4 to P6.

The positions of the each point between P0 and P10 in the chuck/tailstock are as follow.

(1) Setting the chuck

**[For external claw]**

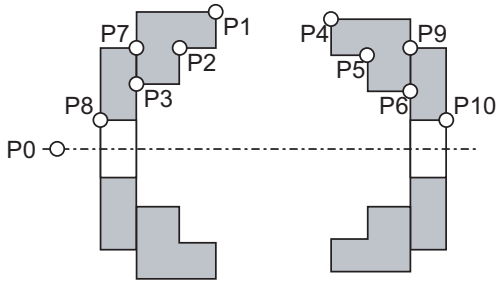


**[For internal claw]**

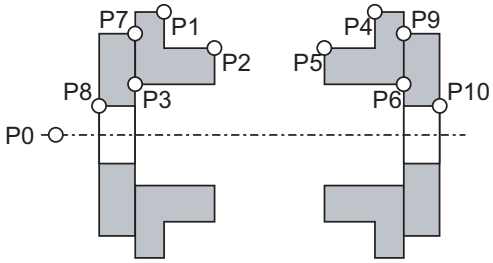


P0 : Workpiece rotation center coordinate
P4,P5,P6 : Chuck section (right)
P9,P10 : Spindle section (right)
P1,P2,P3 : Chuck section (left)
P7,P8 : Spindle section (left)

- Set the X axis coordinates so that P1 > P2 > P3 is established.
- The P3 and P7 in Z coordinates and the P6 and P9 in Z coordinates shall be equal.
- If there is no spindle inner diameter, set the P8 X coordinate to the same value as P0.

If a spindle section is not to be set, set the P3, P7 and P8 values to the same values, and the P6, P9 and P10 values to the same values. The barrier range will be as shown below in this case.

**[For external claw]**

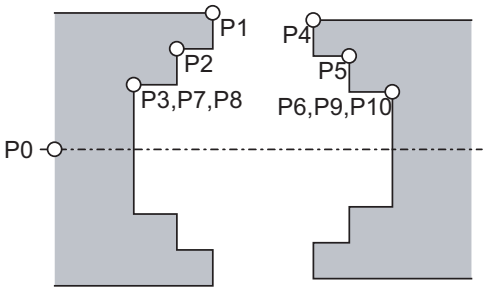


**[For internal claw]**

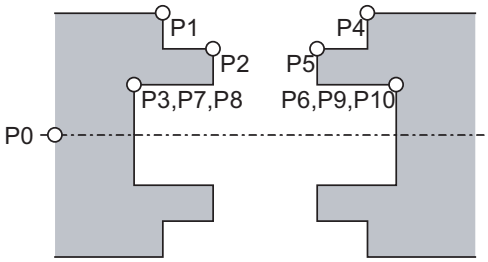


(2) Setting the tailstock

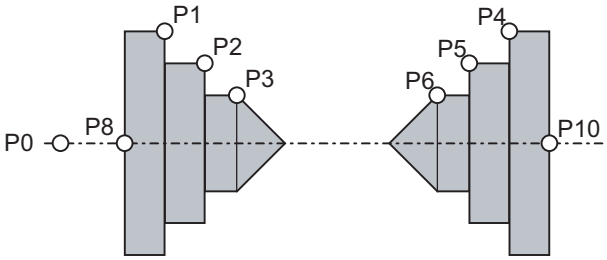


- P7 and P9 are not used.
- The tailstock end section angle is set with the parameters.
  "#8318 STOCK ANGLE (L)"
  "#8319 STOCK ANGLE (R)"
- If "0" is set, the angle will be 90°(default).
- Set the P8 X coordinate to the same value as P0. (No spindle inner diameter)

## Precautions

(1) There is only one checkpoint from the tool regarding the chuck barrier/tailstock barrier. Therefore, the following cautions must be observed.
In the following examples, when the barrier points are set to be checked by the hypothetical tool nose point and the tool moves in the direction of the arrow in the drawing, the following situation may occur. In Example 1, there is a checkpoint in the range "a", so the tool will automatically stop at the barrier boundary. However, in Example 2 there is a checkpoint in the range "b", so the chuck and tool may collide in the range "a".

(Example 1)

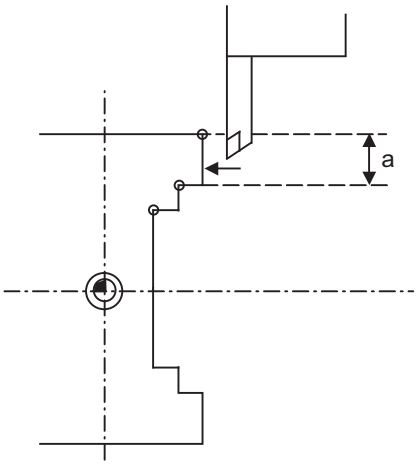


(Example 2)

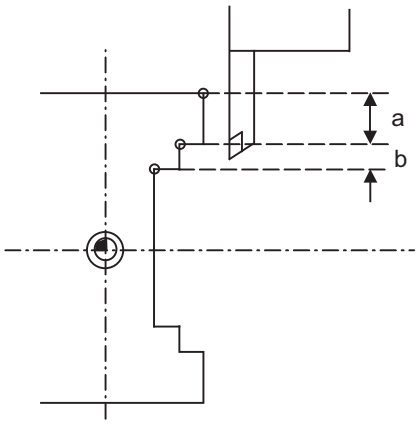


To avoid this, Example 3 is given. In this example, if the barrier points P1, P2 and P3 are set and the checkpoint is set in range "c", the tool can be stopped at the barrier boundary.

(Example 3)

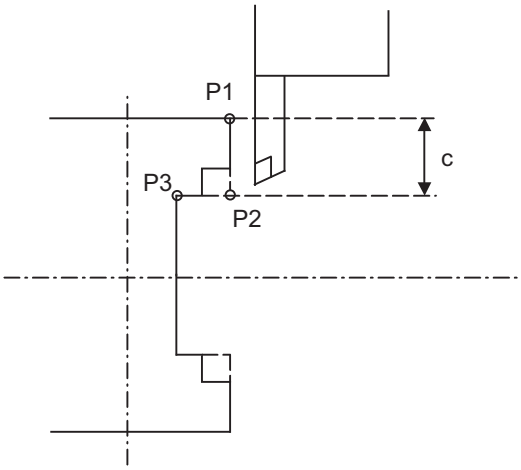


(2) When the tool enters the barrier region and an alarm occurs, the tool may move in the opposite direction from which it came, once the alarm is canceled by resetting.

(3) There is no barrier region for axes without a reference position return function. Thus, there is no barrier alarm for that axis.

(4) When the tool enters a canceled barrier region, and that barrier is then validated, an alarm will occur immediately if the tool is moved.
In this case, after canceling the alarm with reset and then invalidate the barrier (G23) before escaping or change the value set for each barrier point.

(5) The soft limit is valid even if the barrier is invalid (G23).

# 21.2 Stored Stroke Limit; G22, G23

## Function and purpose

The stored stroke limit is a function that can prevent collision of the tools by setting the tool entry prohibited ranges. The stored stroke limit II function can change the tool entry prohibited ranges (parameter) and command its function's ON/OFF by the program.

## Command format

**Stored stroke limit II function (parameter change, function ON (all axes))**

```
G22 X__ Z__ C__ I__ J__ K__ ;
```

**Stored stroke limit II function OFF (all axes)**

```
G23;
```

| | |
|---|---|
| X, Z, C (1st to 3rd axis name) | Stored stroke limit + side designation |
| I, J, K (Plane selection axis name) | Stored stroke limit - side designation |

## Detailed description

G22 must be commanded alone in a block, which also applies to G23.
Whether to set the prohibited range on the inside or outside follows the parameter settings (#8204 or #8205).

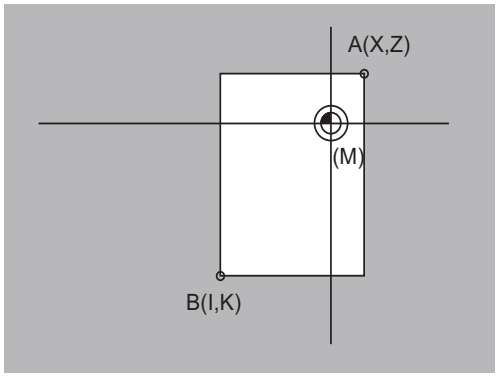


**[When prohibited range is on outside]**

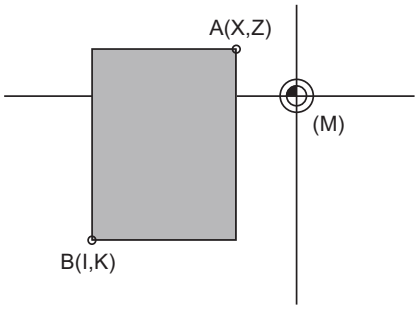


**[When prohibited range is on inside]**

Prohibited range

(M) Basic machine coordinate system

## Precautions

(1) If the maximum value and minimum value of the stored stroke limit's prohibited range are set to the same value, the following will occur.

(a) When the maximum value and minimum value are set to 0, if the outside is the prohibited range, the entire range will be prohibited. If the inside is the prohibited range, the entire range will be the moveable range.

(b) If data other than 0 is set for the maximum value and minimum value, the entire range will be the moveable range. It depends on the MTB specifications (parameter "#1037 cmdtyp").

(2) The settings (G22, G23) with the stored stroke limit II program command are valid at the G code list 6 and 7. It depends on the MTB specifications (parameter "#1037 cmdtyp").

(3) G22 and G23 are unmodal, and are valid only in the commanded block.

## 21.2.1 Stroke Check before Travel in Stored Stroke Limit Area (only 6 and 7 in G code list)

### Function and purpose

When "#12057 OT_prechkON" is set to "1", stroke check before travel is carried out for the stored stroke limit prohibited area.
The stroke check before travel is available only for the axes for which the stored stroke limit prohibited area is designated. Stroke check before travel will not be carried out for the axes with no prohibited area designated.
When a command is issued to move to the stored stroke limit prohibited area, a program error (P452) occurs before the block movement starts, and the axis travel is not carried out.

#### Path passing decision

The tool path of the travel command can also be targeted for "Stroke check before travel in stored stroke limit area" by setting the parameter "#8179" to "1". If a prohibited-area passing command is executed as shown below while the enabling conditions for stroke check before travel are satisfied, operation is stopped due to a program error (P452).

This function applies only to G00, G01, G02, G03, G28, G30, G33, and G53. If a non-target command is executed, a decision is made depending on whether or not the end point is included in the prohibited area. Also, when the axis passes through the prohibited area by a non-target command while the end point is not included in the prohibited area, an operation error (M01 0007) occurs just before the end point gets into the prohibited area, and operation is stopped.

This function is available for stored stroke limit I, stored stroke limit IB, stored stroke limit II, and stored stroke limit IIB. If there is even one axis with stored stroke limit IC enabled, this function is disabled, and the stroke check before travel is determined depending on whether or not the end point is included in the prohibited area.

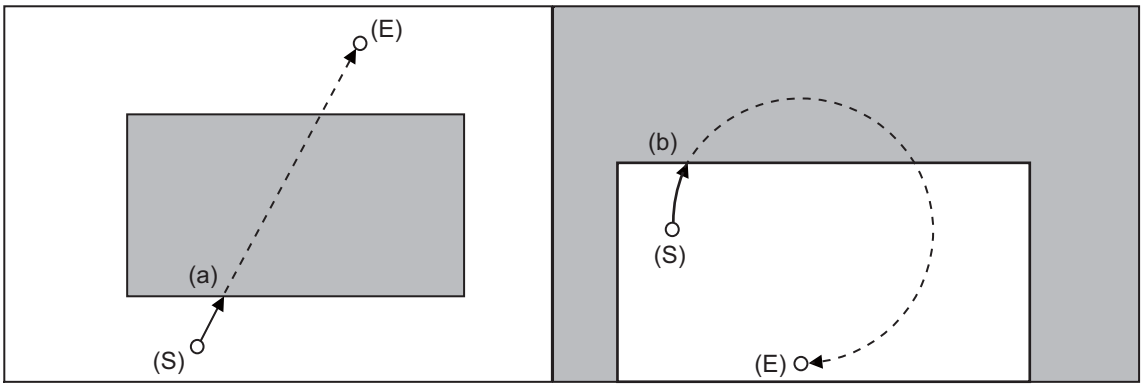


(a) Even if a prohibited-area passing command is executed when the end point is inside the prohibited area, a program error (P452) occurs.

(b) Also, even if a prohibited-area passing command is executed when the end point is outside the prohibited area, a program error (P452) occurs.

## Relationship with other functions

(1) Stroke check before travel will not be carried out during the following modes.
The axis travel stop by the stored stroke limit function is available.

| G code | Function |
|---|---|
| G07.1 | Cylindrical interpolation |
| G12.1/G112 | Polar coordinate interpolation |
| G12.1 | Milling interpolation |
| G05 P1 | High-speed machining mode I |
| G05 P2 | High-speed machining mode II |
| G68.1 | 3-dimensional coordinate conversion |

| G code | Function |
|---|---|
| G05.1 Q1 | High-speed high-accuracy control I |
| G05 P10000 | High-speed high-accuracy control II |
| G05 P4 | Direct command mode |
| G30.1 - G30.5 | Tool exchange position return |
| - | PLC axis control |
| | |

(2) For the axis for inclined axis control (inclined axis or base axis), stroke check before travel is carried out only when it is designated in the orthogonal coordinate system (*1).
Stroke check before travel is not carried out in the prohibited area on the machine coordinate system.
The axis travel stop by the stored stroke limit function is available.

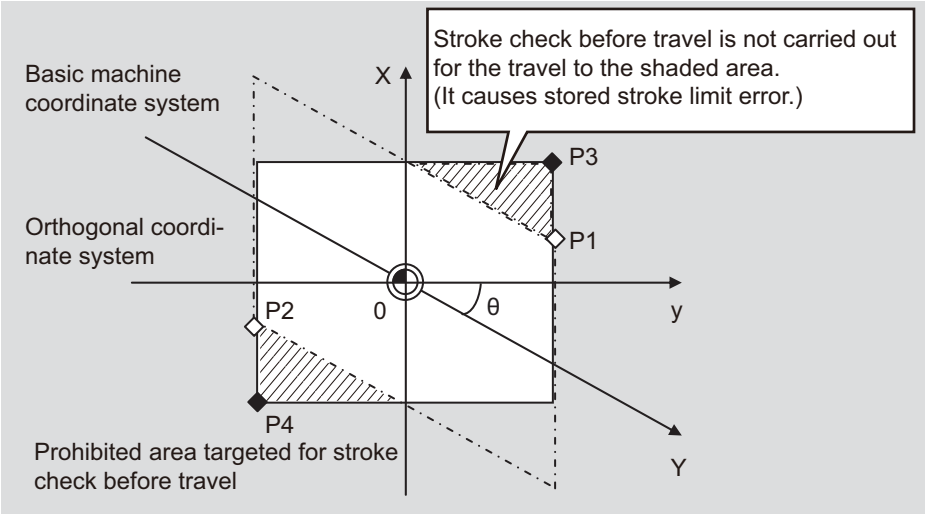


(*1) To carry out the stored stroke limit of the axis for inclined axis control in the orthogonal coordinate system, the following settings are required.

| Range setting parameter | Enabling conditions | Remarks |
|---|---|---|
| #2061 OT_1B-<br>#2062 OT_1B+ | ♦"#2063 OT_1Btype" = "3"<br>♦"#2061 OT_1B-" ≠ "#2062 OT_1B+"<br>♦Zero point return complete | The stored stroke limit IC specification is required. |

(3) Whether stroke check before travel is enabled by the skip function (G31 or G31.n) or the automatic tool length measurement (G37) depends on the MTB specifications (parameter "#12058 OT_prechkTYPE").
When #12058=1, stroke check before travel is carried out for the skip function or the automatic tool length measurement.

(4) For G code lists 6 and 7 ("#1037 cmdtyp" = 7, 8) in the lathe system, a change of the prohibited area and the function ON/OFF switching are possible for stored stroke limit II/IIB using the G22 (stored stroke limit II ON) or G23 (stored stroke limit II OFF) command.

(5) When the following commands are executed, the stroke check before travel by the path passing decision is not available. In a block including any of the following commands, the stroke check before travel is performed depending on whether or not the end point is included in the prohibited area.

| G code | Function |
|---|---|
| G02, G03 | Helical interpolation |
| G02.1, G03.1 | Spiral/conical interpolation |
| G02.3, G03.3 | Exponential interpolation |

(6) The stroke check before travel in the stored stroke limit area with the inside prohibited is not determined correctly in a part system including a synchronized axis for control axis synchronization between part systems. As the same, that is not determined correctly in a part system including a superimposed axis for control axis superimposition or arbitrary axis superimposition. In this case, operation may be stopped due to an operation error (M01 0007) just before the prohibited area.

(7) When the prohibited area is changed by switching the stored stroke limit I area, the changed contents are not reflected in the decision of the stroke check before travel.

## Precautions

(1) If the restarting point is in the prohibited area when the program restarts, a program error (P452) occurs by the automatic restart position return operation.

(2) Issuing a command (fixed cycle, block inserted by tool radius compensation, etc.) that is divided into multiple operations in a single block causes a program error (P452) before the program starts a travel by which the end point enters the prohibited area.

(3) Stroke check before travel is carried out also during machine lock.

(4) When the parameter "#8179" is set to "0", the tool path of the travel command is not targeted for a stroke check before travel. An operation error (M01 0007) occurs and processing stops by the stored stroke limit function just before the prohibited area. To target the following command for the stroke check before travel, set the parameter "#8179" to "1".

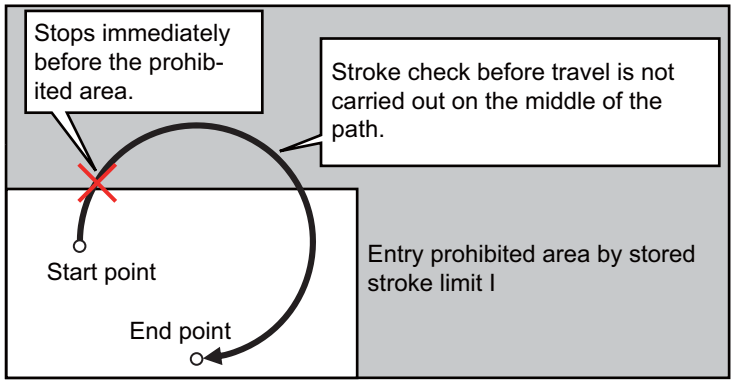


(5) If the end point at block restart enters the prohibited area by the manual interruption after the axis travel has stopped by field hold, it does not cause a program error (P452) by the stroke check before travel.

(6) A travel from the intermediate point to the reference position by the automatic reference position return G28/G30 and a travel from the reference position to the intermediate point by G29 are not targeted for stroke check before travel.

(7) If the stroke check before travel specification by parameter is not provided, a program error (P451) occurs at the timing of the automatic operation start.

(8) To rewrite the parameter #12057 to "1" using the parameter input by program (G10L70), the stroke check before travel specification is required. If the specification is not provided, a program error (P451) occurs when an attempt is made to rewrite the parameter #12057 to "1" using the parameter input by program (G10L70).

(9) The command path passing decision cannot be combined with stored stroke limit IC. If there is even one axis with stored stroke limit IC enabled, a decision is made depending on whether or not the end point is included in the prohibited area.

(10) Even when G00, G28, G30, or G53 is operated in non-interpolation mode, the command path passing decision is made, assuming that the command is operated on a line connecting the start point and end point.

(11) A command for rotary axis is not targeted for the command path passing decision. In a block including a command for rotary axis, a decision is made depending on whether or not the orthogonal axis passes through the prohibited area.

# 21.3 Enable Interfering Object Selection Data; G186

## Function and purpose

Sixteen interfering objects to be checked in the interference check III are preset by the MTB (R register or system variables).
The interfering object selection is enabled by the "Interference check III: Enable interfering object selection data" signal (Y769) or the "Enable interfering object selection data" command (G186) after the target interfering object has been selected.
When the "Interference check III mode" signal (Y76A) is set to ON after the interfering object selection has been enabled, the interference check starts.

Refer to the "PLC Interface Manual" for the R register and commands issued by the PLC device.
For details on the system variables, refer to "23.25 System Variables (Interfering Object Selection)".
This section describes the "Enable interfering object selection data" command (G186).

## Command format

### "Enable interfering object selection data" command

```
G186;
```

## Detailed description

### Consistency check between interfering object definition and interfering object selection

(1) When the "Enable interfering object selection data" command (G186) or the "interference check III: Enable interfering object selection data" signal is set to ON, the consistency between the interfering object definition and interfering object selection is checked.

(2) If the consistency check causes an operation error, all axes in all part systems will stop.
An operation error can be remedied by redefining the interfering object data (*1) or resetting all part systems (except for sub part system 2).

(*1) After correcting the interfering object data, issue the "Enable interfering object selection data" signal or "Enable interfering object selection data" command (G186).

(3) The manual operation and automatic operation are not available until all the part systems (except for subpart system 2) are reset.

(4) In the case the alarm occurs due to the consistency check, the interfering data will not be updated. For the interference check between interfering objects, the interfering data enabled last time is continuously used.

### Interference check III mode enable command

While the interference check III mode signal is set to ON after the "Enable interfering object selection data" signal or the "Enable interfering object selection data" command (G186) has been executed, the interference between interfering objects is checked. While the interference check III is being executed, the interference check III mode active signal is turned ON.
After the NC power is turned ON, if the interference check III mode signal is turned ON without executing the "Enable interfering object selection data" signal or the "Enable interfering object selection data" command (G186) even once, an operation error (M03 1001) will occur.

### Timing chart at execution of G186

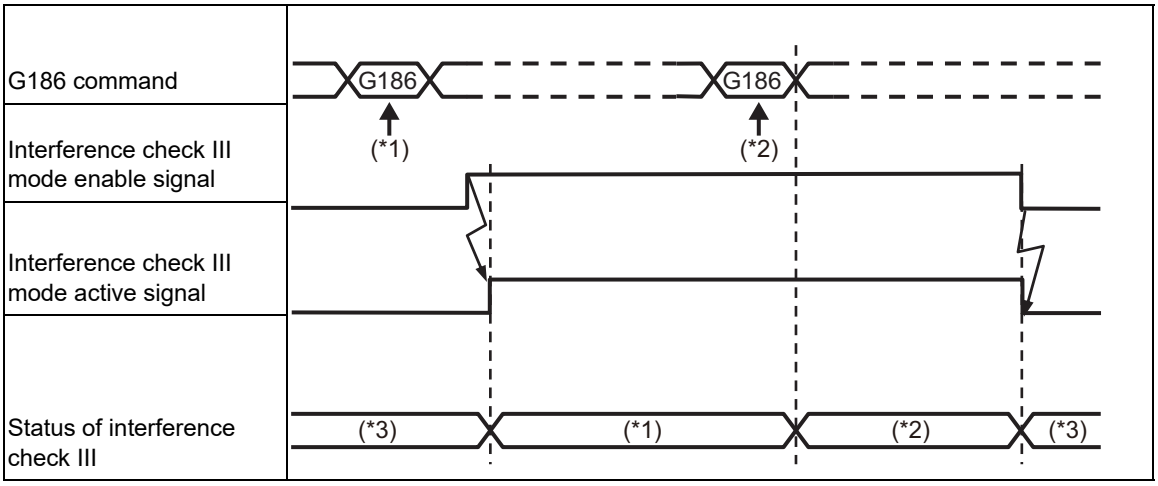


(*1) The first interfering data pattern is set by the G186 command.
The interference check III function executes check processing based on the first data pattern setting.

(*2) The second interfering data pattern is set by the G186 command.
The interference check III function executes check processing based on the second data pattern setting.

(*3) The interference check III function is not executed.

## Relationship with other functions

### Manual arbitrary reverse run

The program cannot be run backward prior to the "Enable interfering object selection data" command (G186).

### Arbitrary reverse run

If the "Enable interfering object selection data" command (G186) is run backward, the interference data at the reverse run is enabled, instead of returning to the interference data at forward run.

## Precautions

(1) The high-speed high-accuracy control function (high-speed machining mode, high-accuracy control, spline interpolation, etc.) generates a path appropriate for the tolerance amount to execute a machining program commanded with fine segments at high speed and smoothly. Thus, a difference arises between the path on which the interference check III is performed and the path on which the tool actually passes. When using the interference check III together with the high-speed high-accuracy control (high-speed machining mode, high-accuracy control, spline interpolation, etc.), define an interfering object (solid) with the clearance amount to suit the path difference that occurs depending on the tolerance amount.

(2) The axis that is stopped when an operation error (M03 0001) or (M03 0002) is detected depends on the MTB specifications (parameter "#1444 otsys" (OT all-part-system stop enable/disable selection).
When "0" is set, all the axes in the part system which controls the axes set to "interfering object I/J/K control axis" and "I/J/K rotary control axis" in the interfering object definition will stop.
When "1" is set, all axes in all part systems will stop.

(3) If an operation error (M03 0002) is detected between the fixed interfering objects (*1), an alarm will be output to part system 1.
(*1) These refer to the interfering objects for which "interfering object I/J/K control axis" and "I/J/K rotary control axis" are not set in the interfering object definition.

(4) If you perform the interference check III during the high-speed simple program check, an operation error (M03 0001) may occur at a position different from the actual operation.

(5) If multiple interfering objects including the rotary axis setting are set as one interfering object using the interfering check III: designation of disabled interference object, only the interfering object in which a rotary axis is set will be in rotating operation, checking the interference between the interfering objects.

(6) If an operation error (M03 0001) occurs, cancel the alarm by moving the interfering object to the retracting direction with the linear axis.

(7) The PLC axis is not available for the interference check III. However, it is available when NC axis/auxiliary axis switching is enabled.

(8) In the interference check III, the interference is checked in 0.1μm units regardless of the control unit.

(9) At the occurrence of the operation error (M03 0001), all the axes in the part system in which the alarm has occurred will stop. If the entry to the interference alarm area is not detected by the subsequent axis travel command (manual operation/automatic operation), the operation error (M03 0001) will be cancelled and the axes will travel. Depending on the relative positional relation between the interfering objects or the feedrate of axes, the axis can travel further to the interfering direction from the stopped position (a direction to which the interfering objects interfere).
Even if the axis moves toward the interfering direction, it will stop before entering the interference alarm area.

# 22

# Measurement Support Functions

# 22.1 Automatic Tool Length Measurement; G37

## Function and purpose

These functions issue the command values from the measuring start position as far as the measurement position, move the tool in the direction of the measurement position, stop the machine once the tool has arrived at the sensor, cause the NC system to calculate automatically the difference between the coordinate values at that time and the coordinate values of the commanded measurement position and provide this difference as the tool offset amount. When offset is already being applied to a tool, it moves the tool toward the measurement position with the offset still applied, and if a further offset amount is generated as a result of the measurement and calculation, it provides further compensation of the present wear compensation amount.

## Command format

### Automatic tool length measurement command

**G37 α__ R__ D__ F__ ;**

| | |
|---|---|
| α | Measuring axis address and coordinates of the measurement position |
| R | This commands the distance between the measurement position and point where the movement is to start at the measuring speed. (Radius value fixed, incremental position) |
| D | This commands the range within which the tool is to stop. (Radius value fixed, incremental position) |
| F | This commands the measuring feedrate.<br>When R_, D_ or F_ is omitted, the value set in the parameter is used instead.<br><Parameter> ("AUTO TLM" on machining parameter screen)<br>•"#8004 SPEED" (measuring feedrate): 0 to 60000 [mm/min]<br>•"#8005 ZONE r": 0 to 99999.999 [mm]<br>•"#8006 ZONE d": 0 to 99999.999 [mm] |

## Detailed description

(1) Operation with G37 command is shown below.

- When the tool (measurement axis) reaches the sensor and the sensor signal detects it, movement on the axis stops.
- When the tool (measurement axis) exceeds the measurement allowable range (a), movement on the axis stops.
- When the sensor signal is detected within the measurement allowable range (a), the measurement is performed.
- When the axis stops moving outside of the measurement allowable range (a), the program error (P607) occurs.

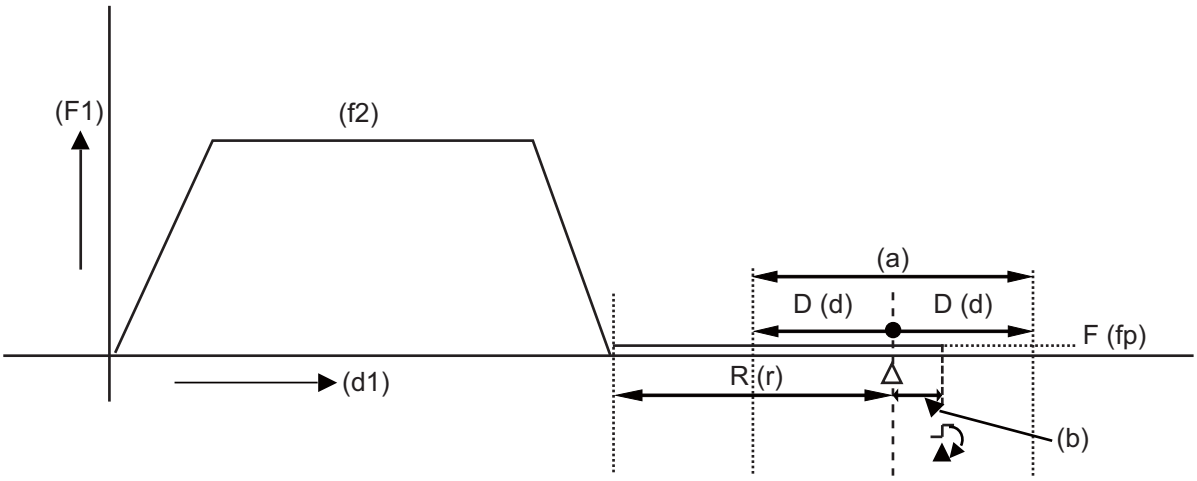


(a) Measurement allowable range (b) Compensation amount (d1) Distance
(F1) Speed (f2) Feedrate (d) Measurement range
(r) Deceleration range

△ Measuring position ▲ Stop point ⎍ Sensor output

(2) The sensor signal (measuring position arrival signal) is used in common with the skip signal.

(3) The feedrate will be 1mm/min if the F command and parameter measurement speed are 0.

(4) During the synchronous feed mode, the axis will move at the synchronous feedrate [mm/rev].

(5) An updated offset amount is valid unless it is assigned from the following T command of the G37 command.

(6) Excluding the delay at the PLC side, the delay and fluctuations in the sensor signal processing range from 0 to 0.2ms.
As a result, the measuring error shown below is caused.

Maximum measuring error [mm] = Measuring speed [mm/min] * 1/60 * 0.2 [ms]/1000

(7) The machine position coordinates at that point in time are read by sensor signal detection, and the machine will overtravel and stop at a position equivalent to the servo droop.

Maximum overtravel [mm] = Measuring speed [mm/min] * 1/60 * 1/Position loop gain [1/s]

The standard position loop gain is 33 (1/s).

## Precautions

(1) Program error (P600) occurs if G37 is commanded when the automatic tool length measurement function is not provided.

(2) Program error (P604) will occur when no axis has been commanded in the G37 block or when two or more axes have been commanded.

(3) Program error (P605) will occur when the T code is commanded in the G37 block. If the last one digit or last two digits is 0, the (4) error will occur.

(4) Program error (P606) will occur when T code is not commanded prior to the G37 block. If the last one digit or last two digits is 0, the (P606) error will occur even if T is commanded.

(5) Program error (P607) will occur when the sensor signal was input outside the allowable measuring range or when the sensor signal was not detected even upon arrival at the end point.

(6) When a manual interrupt is applied while the tool is moving at the measuring speed, a return must be made to the position prior to the interrupt and then operation must be resumed.

(7) The data commanded in G37 or the parameter setting data must meet the following conditions:

| Measurement point - start point | > "R command" or parameter "#8005 ZONE r" > "D command" or parameter "#8006 ZONE d"

(8) When the "D" address and parameter "#8006 ZONE d" in (7) above are "0", the operation will be completed normally only when the commanded measurement point and "sensor" signal detection point coincide. Otherwise, program error (P607) will occur.

(9) When the "R" and ",D" addresses as well as parameters "#8005 ZONE r" and "#8006 ZONE d" in (7) above are all "0", program error (P607) will occur regardless of whether the "sensor" signal is present or not after the tool has been positioned at the commanded measurement point.

(10) When the measurement allowable range is larger than the measurement command distance, it becomes the measurement allowable range for all axes.

(11) When the measurement speed movement distance is larger than the measurement command distance, all axes move at the measurement speed.

(12) When the measurement allowable range is larger than the measurement speed movement distance, the axis moves in the measurement allowable range at the measurement speed.

(13) Always cancel nose R compensation before commanding G37.

(14) Calculate the tool length compensation without regard for the nose R value and tool nose point No. even if the nose R compensation specification is valid.
To set the tool nose point No. to 0, subtract the nose R value from the measured tool length offset amount.
When the tool nose point No. (tool nose shape) is 5, 6, 7, or 8, measure the tool length at the tool tip.

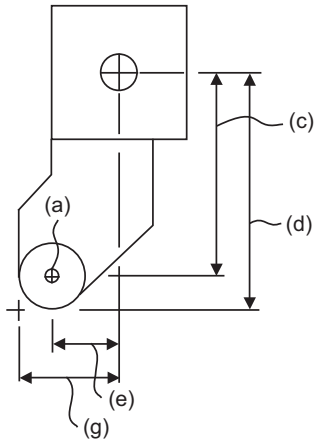


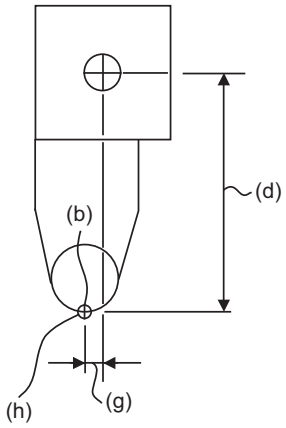


(a) Tool nose point 0
(b) Tool nose point 8
(c) X axis tool length offset value with nose R value subtracted
(d) Measured X axis tool length offset amount
(e) Z axis tool length offset value with nose R value subtracted
(g) Measured Z axis tool length offset amount
(h) Tip of tool nose

# 22.2 Skip Function; G31

## Function and purpose

When the skip signal is input externally during linear interpolation based on the G31 command, the machine feed is stopped immediately, the coordinate value is read, the remaining distance is discarded and the command in the following block is executed.

## Command format

| |
|---|
| **G31 X/U__ Z/W__ R__ F__ ;** |

| | |
|---|---|
| X, Z, U, W | Axis coordinate value; they are commanded with the absolute or the incremental positions. |
| R | Acceleration/deceleration command<br>R0: Acceleration/deceleration time constant=0 (No automatic acceleration/deceleration after interpolation.)<br>R1: Acceleration/deceleration time constant valid. Accelerate/decelerate with the time constant set in the parameters "#2102 skip_tL" and "#2103 skip_t1".<br>When omitted, R0 will be applied. |
| F | Feedrate (mm/min) |

## Detailed description

(1) If an F command is programmed in the same block as G31, the commanded speed is set as the skip speed.
If an F 1-digit feed command is issued to program the feedrate, F 1-digit feed is disabled.
Note that, in the following cases, the skip speed and operations depend on the MTB specifications (parameter "#12022 skipF_spec/bit2").

| | #12022/bit2 = 0 | #12022/bit2 = 1 |
|---|---|---|
| Skip speed if an F command is not programmed in the G31 block | The value of parameter "#1174 skip_F" is used as the skip speed. | The skip speed is determined based on the modality of F when G31 is executed. |
| | A program error (P603) will occur if the value of parameter "#1174 skip_F" is "0". | A program error (P62) will occur if the value of F modality is "0". |
| Mode of commanded speed | Only feed per minute mode is available. Feed per minute mode is enabled even in feed per revolution mode. | Follows the mode (Feed per minute/ Feed per revolution) that is active when G31 is executed. |
| Modality of F command | The F modal is not updated even if the G31 block contains an F command. | The F modal that is updated by an F command in the G31 block varies depending on the mode (Feed per minute/Feed per revolution) that is active when G31 is executed. |

(2) The maximum speed of G31 command is determined by the machine specification.

(3) When R0 is commanded or the R command is omitted, the step acceleration/deceleration will be applied to G31 block after the interpolation without performing the automatic acceleration/deceleration.
When R1 is commanded, the automatic acceleration/deceleration will be performed according to the cutting feed acceleration/deceleration mode set by the parameter "#2003 smgst" with the time constant set by the parameter "#2102 skip_tL" and "#2103 skip_t1". Even if G1 constant-gradient acceleration/deceleration (the parameter "#1201 G1_acc" is set to "1") is valid, the acceleration/deceleration with fixed time constant will be performed.

(4) When the R1 is commanded with the acceleration and deceleration command, the automatic acceleration and deceleration will be performed after the interpolation even if the skip single is input. Note that if the value of the parameter "#2102 skip_tL" and "#2103 skip_t1" are large, the movement will not stop immediately.

Acceleration/deceleration when R0 is commanded or R is omitted

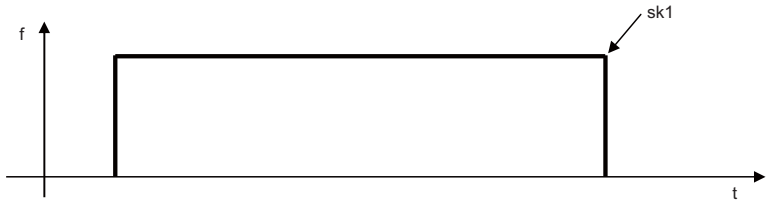


Acceleration/deceleration when R1 is commanded

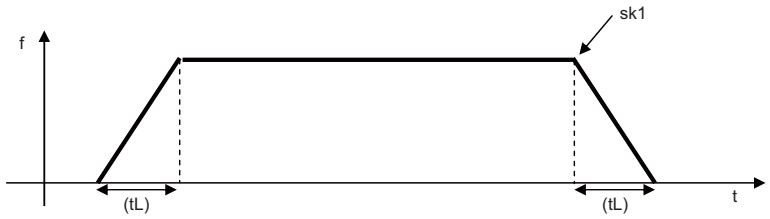


(sk1) Skip signal (tL) Skip time constant

(5) Command the acceleration/deceleration command (R0/R1) whenever G31 is commanded. If R0/R1 has not been commanded, or anything other than R0/R1 has been commanded, the acceleration/deceleration time constant is assumed to "0" (R0), and automatic acceleration/deceleration after interpolation will not be performed.

(6) When G31 is commanded, the stop conditions (feed hold, interlock, override zero and stroke end) are valid. External deceleration is also valid. For the validity of the following functions, confirm to the MTB specifications.

- Cutting feed override (parameter "#12022 skipF_spec/bit0")
- Dry run (parameter "#12022 skipF_spec/bit1")

(7) The G31 command is unmodal and it needs to be commanded each time.

(8) If the skip command is input at the start of the G31 command, the G31 command will be completed immediately. When a skip signal has not been input until the completion of the G31 block, the G31 command will also be completed upon completion of the movement commands.

(9) When the G31 command is issued during nose radius compensation, the program error (P608) will occur.

(10) When there is no F command in the G31 command and the parameter speed is also zero, the program error (P603) will occur.

(11) With machine lock or with the Z axis cancel switch ON when only the Z axis is commanded, the skip signal will be ignored and execution will continue as far as the end of the block.

### Readout of skip coordinates

The coordinate positions for which the skip signal is input are stored in the system variables #5061 (1st axis) to #506n (n-th axis), so these can be used in the user macros.

```
:
G00  X-100. ;
G31 X-200. F60  ;     (Skip command)
#101=#5061 ;          Skip signal input coordinate position (workpiece coordinate system) is readout to #101.
:
```

**Note**

(1) When the parameter "#1366 skipExTyp (Multi-part system simultaneous skip command)" is set to "1", the skip coordinate value will be "0", even if G31 command is given in the first part system or G31 command is given in only one of the multiple part system.

### G31 coasting

The amount of coasting from when the skip signal is input during the G31 command until the machine stops differs according to the parameter "#1174 skip_F" or F command in G31.
The time to start deceleration to stop after responding to the skip signal is short, so the machine can be stopped precisely with a small coasting amount. The coasting amount can be calculated from the following formula.

$$\delta 0 = \frac{F}{60} \times Tp + \frac{F}{60} \times (t1 \pm t2)$$

$$= \underbrace{\frac{F}{60} \times (Tp+t1)}_{\delta 1} \underbrace{\pm \frac{F}{60} \times t2}_{\delta 2}$$

δ0 : Coasting amount (mm)
F : G31 skip speed (mm/min)
Tp : Position loop time constant (s) = (position loop gain)$^{-1}$
t1 : Response delay time (s) = (time taken from the detection to the arrival of the skip signal at the controller)
t2 : Response error time 0.001 (s)

When G31 is used for calculation, the value calculated from the section indicated by δ1 in the above equation can be compensated for, however, δ2 results in calculation error.

Stop pattern with skip signal input is shown below.

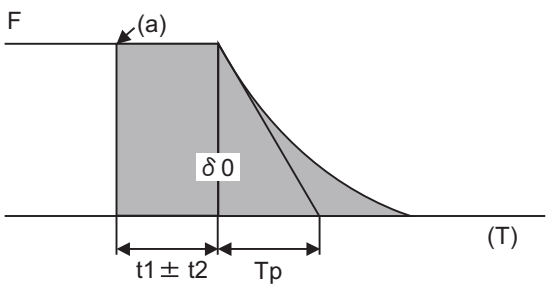


F: Feedrate
(a) Skip signal input
(T) Time
Coasting amount

The relationship between the coasting amount and speed when Tp is 30ms and t1 is 5ms is shown in the following figure.

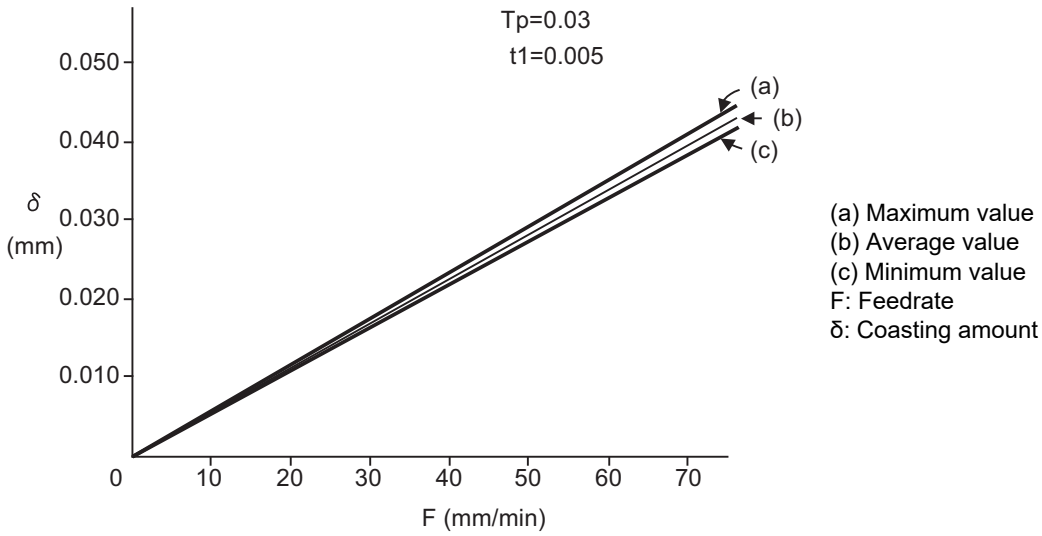


## Readout error of skip coordinates mm

(1) Skip signal input coordinate readout

The coasting amount based on the position loop time constant Tp and cutting feed time constant Ts is not included in the skip signal input coordinate values.
Therefore, the workpiece coordinate values applying when the skip signal is input can be readout within the error range in the following formula as the skip signal input coordinate values. However, coasting based on response delay time t1 results in a measurement error and so compensation must be provided.

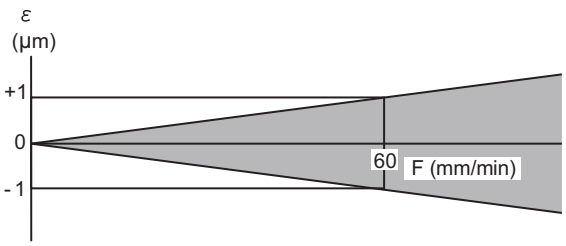


ε : Readout error
ε=±(F/60)×t 2
F : Feedrate
t2 : Response error time 0.001 (s)

Measurement value

Readout error of skip signal input coordinates

Readout error with a 60mm/min feedrate is as shown below and the measurement value is within readout error range of ±1μm:

ε= ± (60/60) x 0.001 = ± 0.001 (mm)

(2) Readout of other coordinates

The readout coordinate values include the coasting amount. Therefore, when coordinate values at the time of skip signal input is required, reference should be made to the section on the G31 coasting amount to compensate the coordinate value. As in the case of (1), the coasting amount based on the delay error time t2 cannot be calculated, and this generates a measuring error.

### Examples of compensating for coasting

(1) Compensating for skip signal input coordinates

```
:
G31 X100.F100 ;            Skip command
G04 ;                      Machine stop check
#101=#5061 ;               Skip signal input coordinate readout
#102=#110*#111/60 ;        Coasting based on response delay time
#105=#101-#102 ;           Skip signal input coordinates
:
#110 = Skip feedrate:
#111 = Response delay time t1;
```

(2) Compensating for workpiece coordinates

```
:
G31 X100.F100 ;            Skip command
G04 ;                      Machine stop check
#101=#5061 ;               Skip signal input coordinate readout
#102=#110*#111/60 ;        Coasting based on response delay time
#103=#110*#112/60 ;        Coasting based on position loop time constant
#105=#101-#102-#103 ;      Skip signal input coordinates
:
#110 = Skip feedrate:
#111 = Response delay time t1;
#112 = Position loop time constant Tp ;
```

### Operation when the skip command is executed on multiple part systems at the same time

The operation resulting from the G31 command executed simultaneously on multiple part systems depends on the MTB specifications (parameter "#1366 skipExTyp").

| #1366 | Operation |
|---|---|
| 0 | When any part system is executing the G31 command, the G31 command issued for other part systems is subjected to a block interlock state, and such G31 command will be executed after the current G31 command execution is completed. (No error is displayed.)<br>In a single block operation, for example, where the G31 block is started in multiple part systems at the same time, it is executed in the smallest part system first. |
| 1 | The G31 command is executed on multiple part systems at the same time.<br>However, the skip coordinate position is not read and is set to "0" in all part systems. (*1) |

(*1) The skip coordinate position is also set to "0" when the G31 command is executed on a single part system. Furthermore, it is set to "0" when the G31 command is executed on one part system in a multiple part system configuration.
When the G31 command is used for measuring purposes, "#1366 skipExTyp" must be "0".

## Operation example

(Example 1) When the next block is an incremental command.

```
G31 Z1000 F100;
G01 U2000 W1000;
```

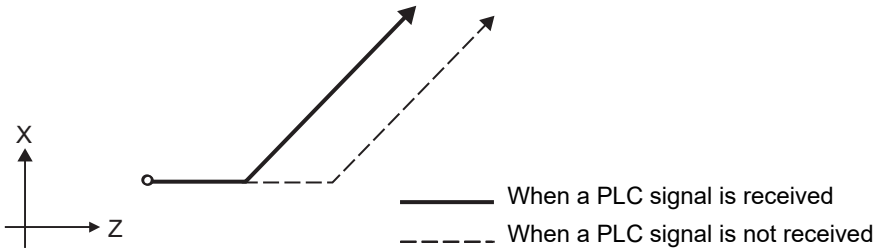


(Example 2) When the next block is a one-axis movement command with absolute position.

```
G31 Z1000 F100;
G01 X1000;
```

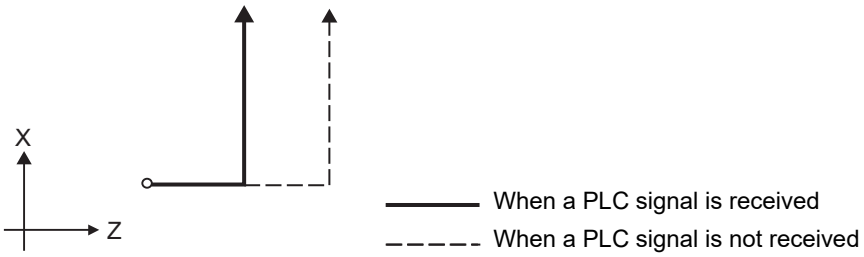


(Example 3) When the next block is a two-axis movement command with absolute position.

```
G31 Z1000 F100;
G01 X1000 Z2000;
```

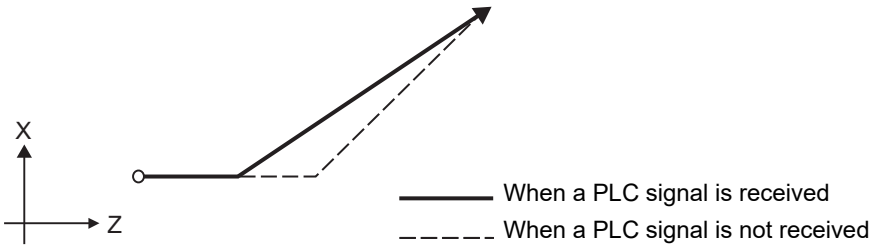

# 22.3 Multi-step Skip Function 1; G31.n, G04

## Function and purpose

The setting of combinations of skip signals to be input enables skipping under various conditions. The actual skip operation is the same as G31.
The G commands which can specify skipping are G31.1, G31.2, G31.3, and G04, and the correspondence between the G commands and skip signals and settings for each parameter depend on the MTB specifications.

## Command format

```
G31.1 X__ Z__ α__ R__ F__ ;
```

| | |
|---|---|
| X Z α | Target coordinates |
| R | Acceleration/deceleration command<br>R0: Acceleration/deceleration time constant=0 (No automatic acceleration/deceleration after interpolation.)<br>R1: Acceleration/deceleration time constant valid. Accelerate/decelerate with the time constant set in the parameters "#2102 skip_tL" and "#2103 skip_t1".<br>When omitted, R0 will be applied. |
| F | Feedrate (mm/min) |

Same with G31.2 and G31.3; Ff is not required with G04.
As with the G31 command, this command executes linear interpolation and when the preset skip signal conditions have been met, the machine is stopped, the remaining commands are canceled, and the next block is executed.

## Detailed description

(1) The skip speed is specified by program command or parameter. Feedrate G31.1 set with the parameter corresponds to "#1176 skip1f", G31.2 corresponds to "#1178 skip2f", G31.3 corresponds to "#1180 skip3f", and G04 corresponds to "#1173 dwlskp". Note that the F modal is not updated in each case.

(2) A command is skipped if it meets the specified skip signal condition.

(3) The feedrates corresponding to the G31.1, G31.2, and G31.3 commands can be set by parameters.

(4) The skip conditions (logical sum of skip signals that have been set) corresponding to the G31.1, G31.2, G31.3 and G04 commands can be set by parameters.

| Parameter setting | Valid skip signal | | |
|---|---|---|---|
| | 1 | 2 | 3 |
| 1 | ○ | | |
| 2 | | ○ | |
| 3 | ○ | ○ | |
| 4 | | | ○ |
| 5 | ○ | | ○ |
| 6 | | ○ | ○ |
| 7 | ○ | ○ | ○ |

(5) Details other than the above are the same as those on G31 (Skip function).

## Operation example

(1) The multi-step skip function enables the following control, thereby improving measurement accuracy and shortening the time required for measurement.

[Parameter settings]

| Skip condition | Skip speed |
|---|---|
| G31.1 :7 | 20.0 mm/min (f1) |
| G31.2 :3 | 5.0 mm/min (f2) |
| G31.3 :1 | 1.0 mm/min (f3) |

[Program example]
N10 G31.1 X200.0 ;
N20 G31.2 X40.0 ;
N30 G31.3 X1.0 ;

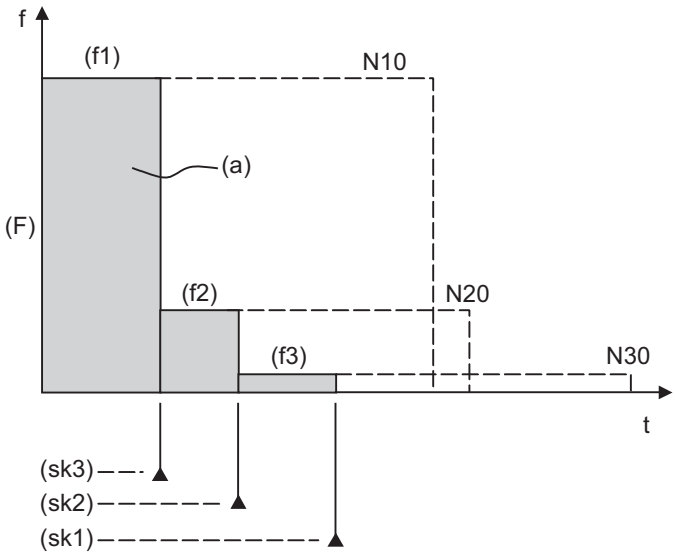


(a) Measurement distance
(F) Skip speed
(sk1) Input of skip signal 1
(sk2) Input of skip signal 2
(sk3) Input of skip signal 3

<Note>
- If skip signal 1 is input before skip signal 2 in the above operation, N20 is skipped at that point and N30 is also ignored.

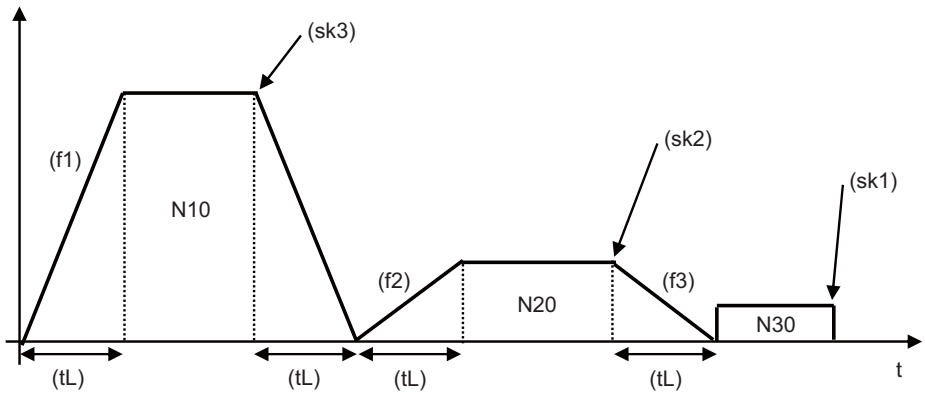


(sk1) Skip signal (tL) Skip time constant

(2) If a skip signal with the condition set during G04 (dwell) is input, the remaining dwell time is canceled and the following block is executed.

# 22.4 Multi-step Skip Function 2; G31 P

## Function and purpose

During linear interpolation by the skip command (G31), operation can be skipped according to the conditions of the skip signal parameter Pp.

If multi-step skip commands are issued simultaneously in different part systems as shown in the left figure, both part systems perform skip operation simultaneously if the input skip signals are the same, or they perform skip operation separately if the input skip signals are different as shown in the right figure. The skip operation is the same as a normal skip command (G31 without P command).

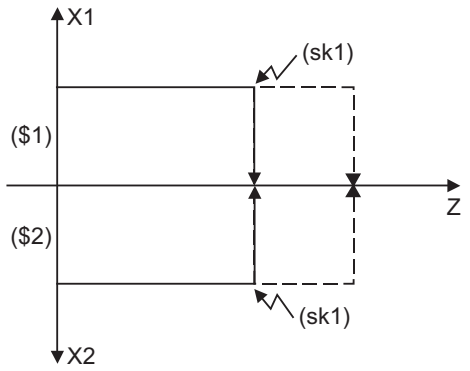


**[Same skip signal input in both 1st and 2nd part systems]**

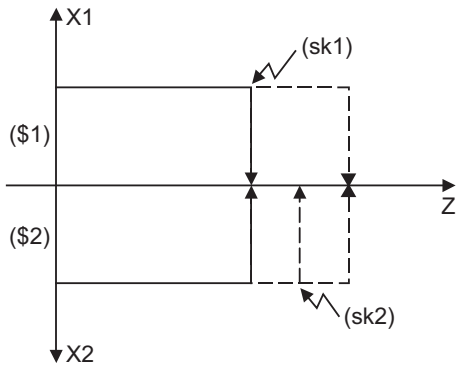


**[Different skip signals input in 1st and 2nd part systems]**

($1) 1st part system
($2) 2nd part system
(sk1) Skip signal 1
(sk2) Skip signal 2

If the skip condition specified by the parameter "#1173 dwlskp" (indicating external skip signals 1 to 4) is met during execution of a dwell command (G04), the remaining dwell time is canceled and the following block is executed.

## Command format

**G31 X__ Z__ α__ P__ R__ F__ ;**

| | |
|---|---|
| X Z α | Target coordinates |
| P | Skip signal command |
| R | Acceleration/deceleration command<br>R0: Acceleration/deceleration time constant=0<br>(No automatic acceleration/deceleration after interpolation.)<br>R1: Acceleration/deceleration time constant valid. Accelerate/decelerate with the time constant set with the parameters "#2102 skip_tL" and "#2103 skip_t1".<br>R0 is applied when it is omitted. |
| F | Feedrate (mm/min) |

## Detailed description

(1) The skip speed is specified by program command or parameter. The feedrate by the parameter is set by "#1174 skip_F". Note that the F modal is not updated in each case.

(2) The skip signal is specified by skip signal command p. The command range of "p" is from 1 to 255. If outside the range is commanded, program error (P35) will occur.

| Skip signal command P | Valid skip signal | | | | | | | |
|---|---|---|---|---|---|---|---|---|
| | 8 | 7 | 6 | 5 | 4 | 3 | 2 | 1 |
| 1 | | | | | | | | ○ |
| 2 | | | | | | | ○ | |
| 3 | | | | | | | ○ | ○ |
| 4 | | | | | | ○ | | |
| 5 | | | | | | ○ | | ○ |
| 6 | | | | | | ○ | ○ | |
| 7 | | | | | | ○ | ○ | ○ |
| 8 | | | | | ○ | | | |
| :<br>:<br>: | | | | | | | | |
| | | | | | | | | |
| 253 | ○ | ○ | ○ | ○ | ○ | ○ | | ○ |
| 254 | ○ | ○ | ○ | ○ | ○ | ○ | ○ | |
| 255 | ○ | ○ | ○ | ○ | ○ | ○ | ○ | ○ |

(3) The specified skip signal command is a logical sum of the skip signals.

(Example) G31 X100. P5 F100 ;
Operation is skipped if skip signal 1 or 3 is input.

(4) If skip signal parameter Pp is not specified, it works as a skip function (G31), not as a multi-step skip function. If speed parameter Ff is not specified, the skip speed set by the parameter "#1174 skip_F" will apply.

[Relations between skip and multi-step skip]

| Skip specifications | × | | ○ | |
|---|---|---|---|---|
| | Condition | Speed | Condition | Speed |
| G31 X100 ;<br>(Without P and F) | Program error<br>(P601) | | Skip 1 | #1174 skip_F |
| G31 X100 P5 ;<br>(Without F) | Program error<br>(P602) | | Command value | #1174 skip_F |
| G31 X100 F100 ;<br>(Without P) | Program error<br>(P601) | | Skip 1 | Command value |
| G31 X100 P5 F100 ; | Program error<br>(P602) | | Command value | Command value |

(5) If skip specification is effective and P is specified as an axis address, skip signal parameter P will be given a priority. The axis address "P" will be ignored.

(Example) G31 X100. P500 F100 ;
This is regarded as a skip signal. (The program error (P35) will occur.)

(6) Other than above, the same detailed description as "Skip function; G31" applies.

# 22.5 Speed Change Skip; G31 Fn

## Function and purpose

When the skip signal is detected during linear interpolation by the skip command (G31), the feedrate is changed.

## Command format

**G31 X__ (Y__) Z__ α__ R__ F__ F1 = __ ... Fn = __ ; ("n" is the skip signal 1 to 8) ... Skip command**

| | |
|---|---|
| X, (Y,) Z, α | Target coordinates |
| R | Acceleration/deceleration command<br>R0: Acceleration/deceleration time constant=0<br>When the movement is stopped by the skip signal detection, the step stop will occur.<br>R1: Acceleration/deceleration time constant valid.<br>When the movement is stopped by the skip signal detection, it will decelerate with the time constant set in the parameter "#2102 skip_tL" and "#2103 skip_t1".<br>When omitted, R0 will be applied. |
| F | Feedrate when starting the cutting feed (mm/min) |
| Fn= | Feedrate after detecting the skip signal (mm/min)<br>Fn = 0: Movement stop<br>Fn ≠ 0 :Changing the feedrate to fn<br>F1 = Feedrate after inputting the skip signal 1<br>:<br>F8 = Feedrate after inputting the skip signal 8 |

## Detailed description

(1) When the skip signal for which the feedrate fn≠0 is commanded, the speed is changed to the command speed corresponding to the skip signal.

(2) When the skip signal for which the feedrate fn=0 is commanded, the movement is stopped. If R0 is commanded or R command is omitted, the skip stop will occur when the movement is stopped by the skip signal detection without performing the automatic acceleration/deceleration by the skip time constant.
When R1 is commanded, the automatic acceleration/deceleration will be performed with the skip time constant after the interpolation even if the movement is stopped by the skip signal detection. Note that if the value of the parameter "#2102 skip_tL" and #2103 skip_t1" are large, it will not stop immediately.
After the movement is stopped, the remaining movement commands are canceled and the following block will be executed.

(3) When a skip signal has not been input until the completion of the G31 block, the G31 command will also be completed upon completion of the movement commands.

(4) When the skip return is valid, the return operation by the skip signal detection is executed after the movement is stopped.

(5) Even if G1 constant-gradient acceleration/deceleration (#1201 G1_acc) is valid, the speed change skip will be the operation of the acceleration/deceleration with fixed time constant.

(6) When the feedrate command (Fn=fn) is not specified after detecting the skip signal, the normal G31 skip operation will be applied.

(7) If a skip signal (one of sk1 to sk4) are input during the deceleration (area (A) in the figure) after a move command has finished:

(a) A skip signal (sk2 in the figure) for changing speed is ignored.

(b) A skip signal (sk1 in the figure) for stopping the movement is executed and the speed is set to "0".

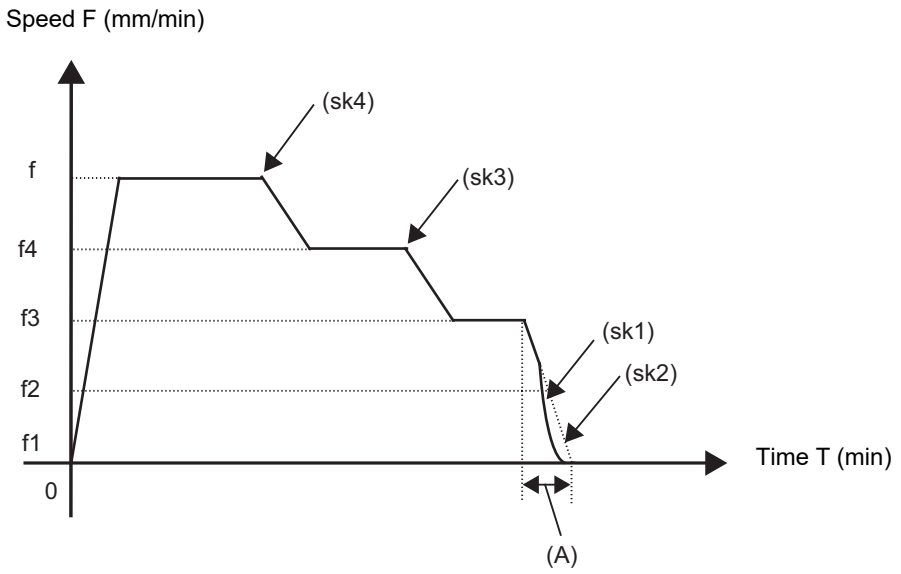


(8) The skip signal without commanding the feedrate in the program will be ignored.

(9) The speed change or the movement stop is performed when detecting the rising edge of the skip signal. Note that if several rising edges are input at 3.5ms intervals or less, they may be judged as the simultaneous input. When they are judged as the simultaneous input, the smaller value will be valid.
Shown below are changes in time (T) and speed (F) when skip signals, 1 (sk1) to 4 (sk4), are input.

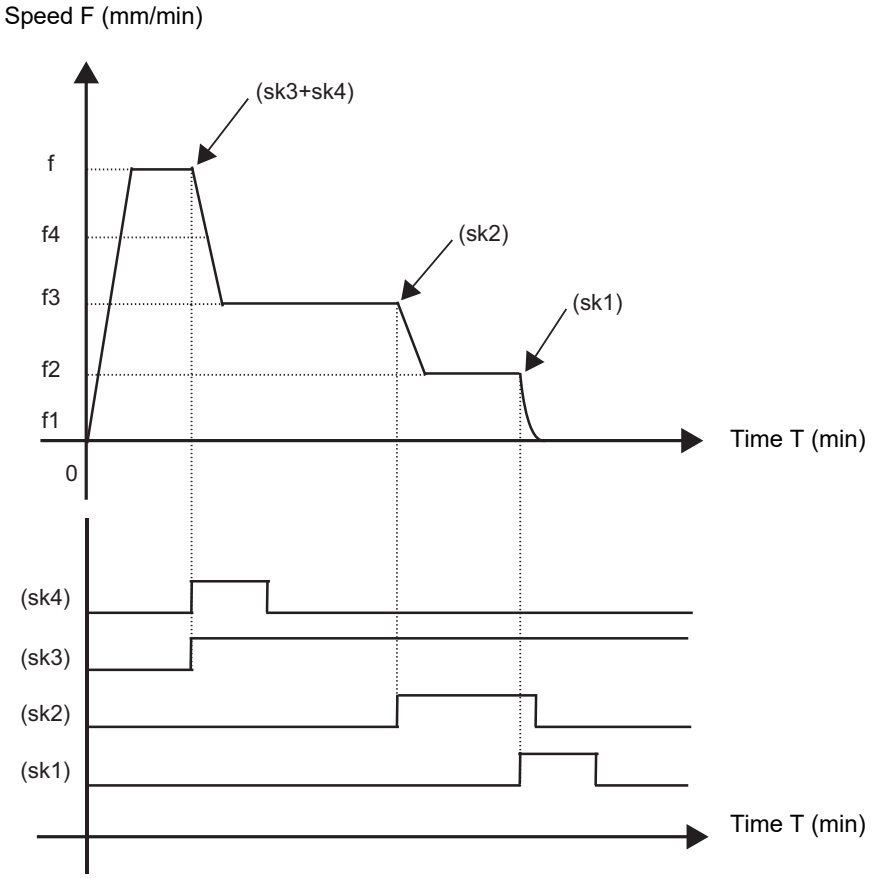


(10) If the G31 block is started with the skip signal input, that signal is considered to rise at the same time as the block starts.

(11) If the skip signals for changing the speed and for stopping the movement are simultaneously input, the skip signal for stopping the movement will be valid regardless of the size of the number.

(12) If the skip time constant "#2102 skip_tL" is illegal, an MCP alarm (Y51 15) will occur. If the "#2103 skip_t1" is illegal, an MCP alarm (Y51 16) will occur.

(13) Other than above, the same detailed description as "Skip function; G31" applies.

## Operation example

The following shows the operations when a skip time constant and skip signals, 1 (sk1) to 4 (sk4), are input.

(1) Example of when R is not commanded

Skip time constant ((a) in the figure) and position loop time constant ((b) in the figure)

G31 X100. Ff F1=0 F2=f2 F3=f3 F4=f4 ;

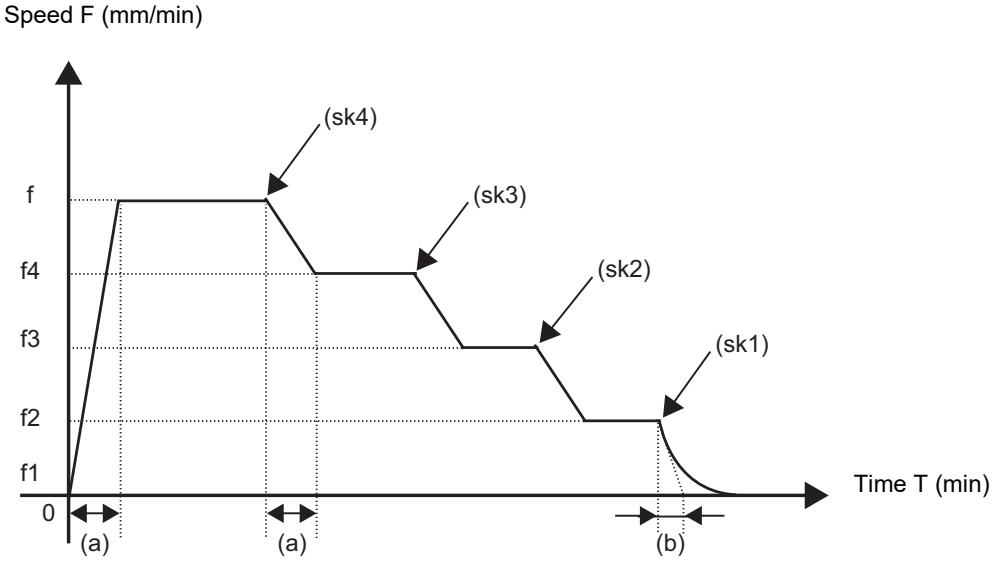


(2) Example of when R1 is commanded

Skip time constant ((tL) in the figure)

G31 X100. R1 Ff F1=0 F2=f2 F3=f3 F4=f4;

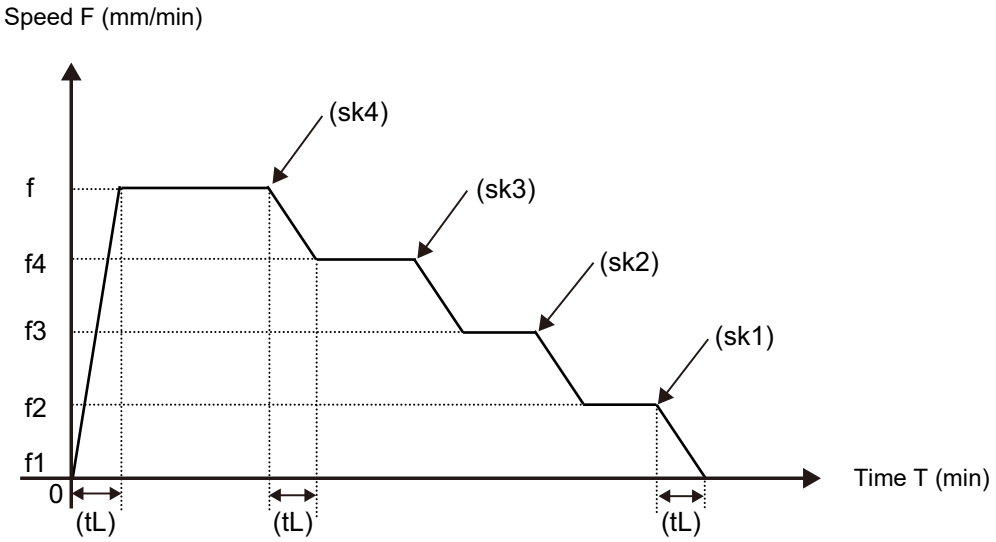

# 22.6 Torque Limitation Skip; G160

## Function and purpose

Axis movement is performed in the torque limited status, and the axis movement command is suspended to proceed to the next block when the current command value reaches the designated torque skip value and the torque skip turns ON. In addition to the torque, the droop value can be add to the condition of the skip ON (Droop skip).
This function enables measurement without a sensor.

Workpiece radius measurement tool

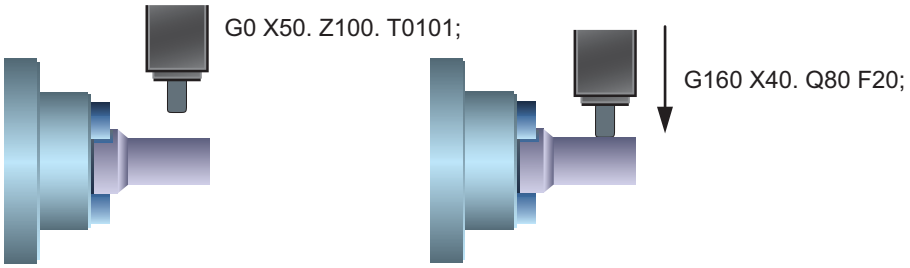


| | |
|---|---|
| : | |
| G00 X50. Z100. T0101; | Tool selection for measurement |
| G160 X40. Q80 F20; | Torque skip command |
| #100=#5061; | Coordinate position (workpiece value) read |
| : | |

## Command format

### Torque limitation skip

**G160 X/U/Z/W/α__ Q__ D__ F__ ;**

The G160 command is unmodal (group 00). When executing the G160 command continuously, it must always be command for each block separately.

| | |
|---|---|
| X/U/Z/W/α | Axis address and coordinate value command (mm/inch) (Decimal point command is possible) |
| Q | Torque skip value (0 to 500 (%)) |
| D | Droop skip value (0 to 99999.999 mm, 0 to 9999.9999 inch) |
| F | Skip speed<br>Set it in the range of feedrates. (mm/min, inch/min, mm/rev, inch/rev) |

**Note**

(1) Designate an axis that exits in the part system for the axis address. If an axis that does not exist in the part system, a program error (P32) will occur.

(2) Only one axis can be commanded with the axis address. If no axis is specified or if two or more axes are specified in the same block, a program error (P595) will occur.

(3) For spindle/C axis (C axis command), a Q command is specified with 121 to 500 %, the axis is clamped at 120%.

(4) If a Q command is omitted, torque skip function is performed as specified by the MTB (parameter shown below).
NC axis (servo axis): SV014 ILMTsp (current limit value in special control)
Spindle/C axis (C axis command):
- For the normal spindle, SP065 TLM1 (torque limit 1)
- For spindle-mode servo, SV014 ILMTsp (current limit value in special control)

(5) If D command is omitted, a skip operation is performed using the torque skip value only.

(6) D command must be programmed within the excessive error width shown below.
NC axis (servo axis): SV023 OD1 (detected excessive error width when servo is on)
Spindle/C axis: SP023 OD1 (detected excessive error width (interpolation mode))

(7) If an F command is omitted, the feedrate depends on the MTB specifications (parameter "#1174 skip_F").

(8) A program error (P603) will occur if the skip speed in F command is 0.

## Detailed description

### Acceleration/deceleration when G160 is commanded

- Follow the acceleration/deceleration pattern for linear interpolation (G01).
- Even if G01 constant-gradient acceleration/deceleration is valid, the time constant acceleration and deceleration will be performed.

### Skip speed

If F command is programmed in the same block as G160, the commanded speed is set as the skip speed.

If an F 1-digit feed command is issued to program the feedrate, F 1-digit feed is disabled.

Note that, in the following cases, the skip speed and operations depend on the MTB specifications (parameter "#12022 skipF_spec/bit2").

| | #12022/bit2 = 0 | #12022/bit2 = 1 |
|---|---|---|
| Skip speed if F command is not programmed in the G160 block | The value of parameter "#1174 skip_F" is used as the skip speed. | The skip speed is determined based on the modality of F when G160 is executed. |
| | A program error (P603) will occur if the value of parameter "#1174 skip_F" is "0". | A program error (P62) will occur if the value of F modality is "0". |
| Mode of commanded speed | Only feed per minute mode is available. Feed per minute mode is enabled even in feed per revolution mode. | Follows the mode (Feed per minute/Feed per revolution) that is active when G160 is executed. |
| Modality of F command | F modal is not updated even if the G160 block contains an F command. | The F modal that is updated by F command in the G160 block varies depending on the mode (Feed per minute/Feed per revolution) that is active when G160 is executed. |

### Control signals regarding speed control and stop

(1) For the validity of the following various functions, refer to the MTB specifications.
- Cutting feed override valid/invalid (parameter "#12022 skipF_spec/bit0")
- Dry run valid/invalid (parameter "#12022 skipF_spec/bit1")

(2) An operation error (M01 0102) occurs if 0% cutting feed override is performed when cutting feed override is invalid.

(3) The stop conditions (feed hold, interlock, override zero and stroke end) and external deceleration are valid when torque limitation skip is used.

(4) The machine lock signal is valid. (The counter is updated until the program reaches the end point of the block.)

### Processing when the torque skip turns on

(1) If the current value for the specified axis exceeds the torque skip value, the torque limit is reached and droop exceeds the droop skip value, the torque skip turns on. If there is no D command, the torque skip turns on when the torque limit is reached.

(2) The current position when the torque skip turns on is regarded as the block end point and the remaining distance (command value - actual movement distance) is discarded.

### Completion of skip command

(1) If the torque skip turns on during G160 command, the program completes the current block before moving on to the next block.

(2) If the torque skip does not turn on until G160 command reaches the end point, the skip command completes at the end of the block and then the program moves on to the next block.

(3) Set the skip coordinate values (workpiece coordinate values) to system variables (#5061 and onwards). When the tool has moved to the end point, set the end point position.

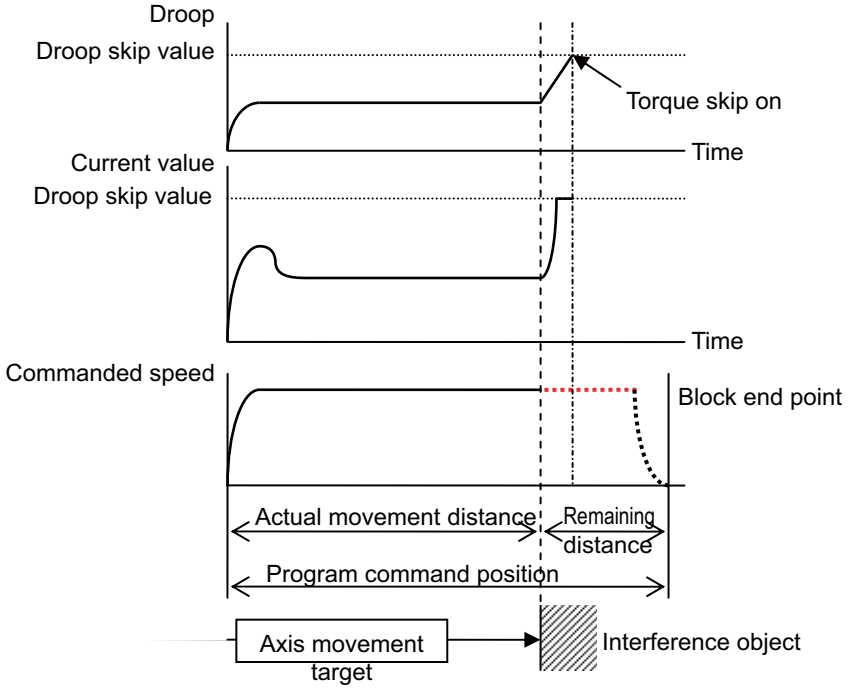


### Program example

| | |
|---|---|
| : | : |
| G00 X50. Z100. T0101; | Tool selection for measurement |
| G160 X40. Q80 F20; | Torque skip command |
| #100=#5061; | Completion of skip command<br>Coordinate position (workpiece value) read |
| : | |

Workpiece radius measurement tool

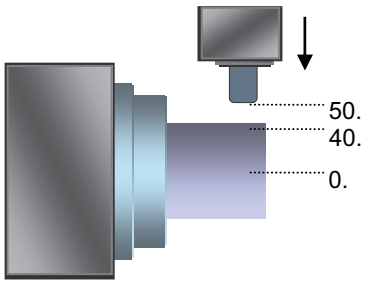

## Relationship with Other Functions

### Manual arbitrary reverse run

The skip speed is controlled with the manual arbitrary reverse run speed. Torque skip command block cannot be executed in the reverse run.

### Manual interruption

When a manual interrupt is applied during execution of torque skip, calculate the position shifted by the amount of the manual interruption as the skip position.

### Skip variables

The torque skip position is common to skip variables (#5061 and onwards) for G31 skip function.

### Geometric, Corner Rounding, Corner Chamfering

Geometric, Corner Rounding, and Corner Chamfering are not available for torque skip blocks. Program error (P595) will occur.

### Torque limit

Torque skip command, if executed on the axis to which torque limits are applied, is based on the torque skip value in the G160 command.

### Functions for which torque skip command is not available

Torque skip command (G160) cannot be commanded when any of the following functions is in use. (An error will occur.)

| Function name | Error |
|---|---|
| Nose R Compensation (G40, G41, G42, G46) | Program error (P608) |
| Milling Interpolation (G12.1) | Program error (P481) |
| Synchronous control (G114.1) | Program error (P595) |
| High-speed high-accuracy control (G05.1/G05) | Program error (P34) |
| Axis under inclined axis control | Program error (P595) |
| Axis during the control axis synchronization between part systems | Operation error (M01 1038) |
| Axes in the control axis superimposition and arbitrary axis superimposition | Operation error (M01 1003) |

## Precautions

(1) Decreasing the torque limit value may cause a torque limit to be applied during acceleration/deceleration.

(2) When the reset button is pressed while torque skip is active, an axis moving with G160 stops. After the axis has stopped, the original torque is restored.

(3) Writing parameters via a PLC or other host controller during execution of torque skip causes the torque limit value to be the setting value of servo parameter SV014, possibly causing it to be no longer correct torque skip value. (The PLC signal operations and setting values of the servo parameters are based on the MTB specifications.)

(4) When using D command (droop skip value), command a value that does not exceed the excessive error width.

(5) After a torque skip, the droop is canceled.

(6) The droop is displayed in interpolation increments on the drive monitor. They are different from the command increments of D command.

# 22.7 Programmable Current Limitation; G10 L14

## Function and purpose

This function allows the current limit value of the NC axis to be changed to a desired value in the program, and is used for the workpiece stopper, etc. "#2214 SVO14(current limit value in special control)" can be changed.
The commanded current limit value is designated with a ratio of the limit current to the rated current.

## Command format

| |
|---|
| **G10 L14 Xn ;** |

| | |
|---|---|
| L14 | Current limit value setting (+ side/- side) |
| X | Axis address |
| n | Current limit value (%) (Setting range: 1 to 999) |

## Precautions

(1) If the current limit value is reached when the current limit is valid, the current limit reached signal is output.

(2) The following two modes can be used with external signals as the operation after the current limit is reached. The external signal determines which mode applies.

[Normal mode]

The movement command is executed in the current state.
During automatic operation, the movement command is executed until the end, and then move to the next block with the droops still accumulated.

[Interlock mode]

During the occurrence of the droops, it enters to the internal interlock state and the next movement will not be carried out.
During automatic operation, the operation stops at the corresponding block, and the next block is not moved to.
During manual operation, the following same direction commands are ignored.

(3) The position droop generated by the current limit can be canceled when the current limit changeover signal of external signals is canceled. (Note that the axis must not be moving.)

(4) The setting range of the current limit value is 1% to 999%. Commands that exceed this range will cause a program error (P35).

(5) If a decimal point is designated with the G10 command, only the integer will be valid.

(Example) G10 L14 X10.123 ; The current limit value will be set to 10%.

(6) For the axis name "C", the current limit value cannot be set from the program (G10 command).
To set from the program, set the axis address with an incremental axis name, or set the axis name to one other than "C".

# 23

# System Variables

# 23.1 System Variables List

MITSUBISHI CNC provides the following system variables.
Note that the available types and numbers vary depending on the models, the machine specifications and whether the machine is intended for use by a user or MTB.

○: Available
-: Unavailable

| No. | Data type or use | Reading | Setting | Section |
|---|---|---|---|---|
| #1000 - #1035,<br>#1200 - #1295 | Signal input from PLC to NC | ○ (*1) | - | 23.21 |
| #1100 - #1135,<br>#1300 - #1395 | Signal output from NC to PLC | ○ (*1) | ○ (*1) | 23.22 |
| #2001 - #2000+n<br>#2101 - #2100+n<br>#2201 - #2200+n<br>#2301 - #2300+n<br>#2701 - #2700+n<br>#2801 - #2800+n<br>#2901 - #2900+n | Tool offset data<br>Also refer to "#10001" and later. | ○ | ○ | 23.6 |
| #2501, #2601 | External workpiece coordinate offset / Workpiece coordinate system shift | ○ | ○ | 23.10 |
| #3000 | Used to forcibly set to the alarm mode.<br>Designate the number and message. | - | ○ | 23.12 |
| #3001, #3002 | Cumulative time (integrating time) | ○ | - | 23.14 |
| #3001, #3002,<br>#3011, #3012 | Time read variables | ○ | ○ | 23.15 |
| #3003 | ♦Inhibition of single block stop<br>♦Inhibition of miscellaneous function finish signal waiting<br>♦Prohibition of program check reverse run<br>♦Synchronization between part systems OFF | ○ | ○ | 23.16 |
| #3004 | ♦Automatic operation pause OFF<br>♦Cutting override OFF<br>♦G09 check OFF<br>♦Dry run invalid | ○ | ○ | |
| #3006 | Used to display and stop a message. | - | ○ | 23.13 |
| #3007 | Mirror image | ○ | - | 23.18 |
| #3901, #3902 | Number of machining processes / Maximum number of machining processes | ○ | ○ | 23.17 |
| #4001 - #4021<br>#4201 - #4221 | G command modal information | ○ | - | 23.2 |
| #4101 - #4120<br>#4301 - #4320 | Non-G command modal information | ○ | - | 23.3 |
| #4401 - #4421<br>#4507 - #4520 | Modal information at macro interruption | ○ | - | 23.4 |
| #5001 - #5140+n | Position information<br>♦End point coordinate position of the previous block<br>♦Machine coordinate position<br>♦Workpiece coordinate position<br>♦Skip coordinate position<br>♦Servo deviation amount<br>♦Macro interruption stop block coordinate position | ○ | - | 23.11 |
| #5201 - #532n | External workpiece coordinate offset data | ○ | ○ | 23.8 |
| #7001 - #7948 | Extended workpiece coordinate offset data | ○ | ○ | 23.9 |

| No. | Data type or use | Reading | Setting | Section |
|---|---|---|---|---|
| #10001 - #10000+n<br>#11001 - #11000+n<br>#12001 - #12000+n<br>#13001 - #13000+n<br>#14001 - #14000+n<br>#15001 - #15000+n<br>#16001 - #16000+n<br>#17001 - #17000+n<br>#18001 - #18000+n | Tool offset data<br>Also refer to "#2001" and later. | ○ | ○ | 23.6 |
| #28001 - #28000+n<br>#29001 - #29000+n | (M8 Series only) | | | |
| #31001 - #31023 | Rotary axis configuration parameter | ○ | - | 23.19 |
| #40000 - #40097 | Specification of the selected interfering object and interfering model coordinate system offset | ○ | ○ | 23.25 |
| #50000 - #50749<br>#51000 - #51749<br>#52000 - #52749 | Data of user backup area for R device | ○ (*1) | ○ (*1) | 23.23 |
| #50000-#50749<br>#51000-#51749<br>#52000-#52749 | ZR device access variables (C80 series only) | ○ | ○ | 23.26 |
| #60000 - #63016 | Tool life management | ○ | ○ (*2) | 23.7 |
| #68000 - #68003 | Tool management | ○ | ○ (*2) | 23.5 |
| #68011 - #68023 | Basic information | ○ | ○ (*2) | |
| #68031 - #68040 | Shape information | ○ | ○ | |
| #68051 - #68054 | Cutting conditions | ○ | ○ | |
| #68061 - #68072 | Additional information | ○ | ○ | |
| #68081 - #68088 | Tool life | ○ | ○ | |
| #68101 - #68113 | Compensation amount | ○ | ○ | |
| #100000 | Parameter No. designation | - | ○ | 23.20 |
| #100001 | Part system No. designation | - | ○ | |
| #100002 | Axis No./spindle No. designation | - | ○ | |
| #100010 | Parameter value read | ○ | - | |
| #100050 - #100054 | NC data reading/writing with API section and sub-section designation (M8 Series only) | ○ | ○ | 23.27 |
| #100100 | Device type designation | - | ○ | 23.24 |
| #100101 | Device No. designation | - | ○ | |
| #100102 | Number of read bytes designation | - | ○ | |
| #100103 | Read bit designation | - | ○ | |
| #100110 | Reading PLC data | ○ | - | |

(*1) Only for MTB. This cannot be designated by the user.

(*2) Some numbers are not available depending on the contents.

### 23.1.1 System Variables for Program Format Switch

The table below lists the system variables that are available in the G code lists before and after program format switch.

L: Lathe system
M: Machining center system

○: Enabled, ×: Disabled

| System variable No. | | Description | | G code lists | |
|---|---|---|---|---|---|
| Head number | Final number | | | L | M |
| 1000 | 1035 | Macro interface input (PLC -> NC) | | ○ | ○ |
| 1100 | 1135 | Macro interface output (NC -> PLC) | | ○ | ○ |
| 1200 | 1295 | Macro interface input (PLC -> NC) | | ○ | ○ |
| 1299 | 1299 | Sampling start/end trigger | | ○ | ○ |
| 1300 | 1395 | Macro interface output (NC -> PLC) | | ○ | ○ |
| 1900 | 1901 | Normal line control | | × | ○ |
| 2001 | 2000+n | Tool compensation<br>L system: n = 99<br>M system: n = 200 | 1st axis tool length (L system)/length dimension (M system) | ○ | ○ |
| 2101 | 2100+n | | 2nd axis tool length (L system) | ○ | × |
| 2201 | 2200+n | | Tool nose radius (L system)/length wear (M system) | ○ | ○ |
| 2301 | 2300+n | | Tool nose point P (L system) | ○ | × |
| 2401 | 2400+n | | Radius dimension (M system) | × | ○ |
| 2601 | 2600+n | | Radius wear (M system) | × | ○ |
| 2701 | 2700+n | | 1st axis wear (L system) | ○ | × |
| 2801 | 2800+n | | 2nd axis wear (L system) | ○ | × |
| 2901 | 2900+n | | Radius wear (L system) | ○ | × |
| 3000 | 3000 | Macro alarm message | | ○ | ○ |
| 3001 | 3002 | Cumulative time (milliseconds) | | ○ | ○ |
| 3003 | 3003 | Single block stop, inhibition of miscellaneous function finish signal waiting | | ○ | ○ |
| 3004 | 3004 | Feed hold, feedrate override, G09 valid/invalid | | ○ | ○ |
| 3006 | 3006 | Used to display and stop a message. | | ○ | ○ |
| 3007 | 3007 | Mirror image axis | | ○ | ○ |
| 3011 | 3012 | Current time | | ○ | ○ |
| 3900 | 3900 | Synchronous tapping (Return override valid/invalid) | | ○ | ○ |
| 3901 | 3902 | Number of machining processes/Maximum number of machining processes | | ○ | ○ |
| 4001 | 4021 | G command modal information (Pre-read) | | ○ | ○ |
| 4201 | 4221 | G command modal information (Execute) | | ○ | ○ |
| 4101 | 4120 | Non-G command modal information (Pre-read) | | ○ | ○ |
| 4301 | 4320 | Non-G command modal information (Execute) | | ○ | ○ |
| 4401 | 4421 | Modal information at macro interruption (Pre-read) | | ○ | ○ |
| 4507 | 4520 | Modal information at macro interruption (Execute) | | ○ | ○ |
| 5001 | 5176 | Position information | | ○ | ○ |
| 5201 | 5336 | Workpiece coordinate system offset | | ○ | ○ |
| 7001 | 8900+n | Extended workpiece offset - variable number area 1 (n = Axis No.) | | ○ | ○ |
| 10001 | 10999 | Tool compensation | 1st axis tool length (L system)/length dimension (M system) | ○ | ○ |
| 11001 | 11999 | | 1st axis wear (L system)/length wear (M system) | ○ | ○ |
| 12001 | 12999 | | 1st additional axis tool length (L system) | ○ | × |
| 13001 | 13999 | | 1st additional axis wear (L system) | ○ | × |
| 14001 | 14999 | | 2nd axis tool length (L system) | ○ | × |
| 15001 | 15999 | | 2nd axis wear (L system) | ○ | × |
| 16001 | 16999 | | Tool nose radius (L system)/radius dimension (M system) | ○ | ○ |
| 17001 | 17999 | | Radius wear (L system)/radius wear (M system) | ○ | ○ |
| 18001 | 18999 | | Tool nose point P (L system) | ○ | × |

| System variable No. | | Description | | G code lists | |
|---|---|---|---|---|---|
| Head number | Final number | | | L | M |
| 23901 | 23901 | Number of workpiece machining times | | ○ | ○ |
| 23902 | 23902 | Maximum workpiece value | | ○ | ○ |
| 26000 | 26078 | Workpiece installation error compensation amount | | × | ○ |
| 27000 | 27007 | Backlash adjustment | | × | ○ |
| 28001 | 28999 | Tool compensation | 2nd additional axis tool length (L system) [M8] | ○ | × |
| 29001 | 29999 | | 2nd additional axis wear (L system) [M8] | ○ | × |
| 30000 | 30016 | External switch mirror image | | × | ○ |
| 30020 | 30036 | Mirror image by parameter setting | | × | ○ |
| 30040 | 30056 | Program mirror image | | × | ○ |
| 30060 | 30068 | Coordinate rotation by parameter | | × | ○ |
| 30070 | 30076 | Coordinate rotation by program | | ○ | ○ |
| 30080 | 30097 | Scaling | | × | ○ |
| 31001 | 31023 | Rotary axis configuration parameter | | × | ○ |
| 31100 | 31102 | Number of blocks for which the arbitrary reverse run is enabled | | ○ | ○ |
| 35000 | 35007 | Inertia Estimation | | ○ | ○ |
| 60000 | 64700 | Tool life management | | ○ | ○ |
| 68000 | 68072 | Tool management | | ○ | ○ |
| 68081 | 68088 | Tool life | | ○ | ○ |
| 68101 | 68102 | Tool compensation | Tool compensation - H number/D number | ○ | ○ |
| 68103 | 68105 | | Tool compensation - compensation amount (Length dimension/XZ additional axis) | ○ | ○ |
| 68106 | 68108 | | Tool compensation - wear amount (Length wear/XZ additional axis) | ○ | ○ |
| 68109 | 68109 | | Tool compensation - radius dimension/tool nose radius | ○ | ○ |
| 68110 | 68110 | | Tool compensation - radius wear/R wear | ○ | ○ |
| 68111 | 68111 | | Tool compensation - tool nose point P | ○ | ○ |
| 68112 | 68112 | | Tool compensation - compensation amount (2nd additional axis) | ○ | × |
| 68113 | 68113 | | Tool compensation - wear amount (2nd additional axis) | ○ | × |
| 100000 | 100010 | Reading parameters | | ○ | ○ |
| 100100 | 100110 | Reading PLC data | | ○ | ○ |
| 101001 | 116000 | Extended workpiece offset (Variable number area 3) | | ○ | ○ |
| 999000 | 999099 | NAVI variable | | ○ | ○ |

# 23.2 System Variables (G Command Modal)

**Detailed description**

Using variable Nos. #4001 to #4021, it is possible to read the modal commands which have been issued in previous blocks.
Similarly, it is possible to read the modals in the block being executed with variable Nos. #4201 to #4221.

| Variable No. | | Function | |
|---|---|---|---|
| Pre-read block | Execution block | | |
| #4001 | #4201 | Interpolation mode | G00 : 0, G01 : 1, G02 : 2, G03 : 3, G33 : 33 |
| #4002 | #4202 | Plane selection | G17 : 17, G18 : 18, G19 : 19 |
| #4003 | #4203 | Absolute/incremental | G90 : 90, G91 : 91 |
| #4004 | #4204 | Barrier check | G22 : 22, G23 : 23 |
| #4005 | #4205 | Feed designation | G94 : 94, G95 : 95 |
| #4006 | #4206 | Inch/metric | G20 : 20, G21 : 21 |
| #4007 | #4207 | Tool nose radius compensation | G40 : 40, G41 : 41, G42 : 42, G46 : 46 |
| #4008 | #4208 | No variable No. | |
| #4009 | #4209 | Fixed cycle | G80 : 80, G70-G79 : 70-79, G83-G85 : 83-85, G83.2 : 83.2, G87-G89 : 87-89 |
| #4010 | #4210 | Return level | G98 : 98, G99 : 99 |
| #4011 | #4211 | | |
| #4012 | #4212 | Workpiece coordinate system | G54-G59 : 54-59, G54.1:54.1 |
| #4013 | #4213 | Acceleration/deceleration | G61-G64 : 61-64, G61.1 : 61.1 |
| #4014 | #4214 | Macro modal call | G66 : 66, G66.1 : 66.1, G67 : 67 |
| #4015 | #4215 | | |
| #4016 | #4216 | No variable No. | |
| #4017 | #4217 | Constant surface speed | G96 : 96, G97 : 97 |
| #4018 | #4218 | Balance cut | G14 : 14, G15 : 15 |
| #4019 | #4219 | | |
| #4020 | #4220 | | |
| #4021 | #4221 | | |

Example:

```
G28 X0 Z0 ;
G00 X150. Z200 ;
G65 P300 G02 W-30. K-15. F1000 ;
M02 ;
O300
#1 = #4001 ;   = -> Group 01  G modal (pre-read) #1 = 2.0
#2  = #4201 ;    = ->Group 01  G modal (active) #2 = 0.0
G#1 W#24 ;
M99 ;
%
```

# 23.3 System Variables (Non-G Command Modal)

**Detailed description**

Using variable Nos. #4101 to #4120, it is possible to read the modal commands which have been issued in previous blocks.
Similarly, it is possible to read the modals in the block being executed with variable Nos. #4301 to #4320.

| Variable No. | | Modal information | Variable No. | | Modal information |
|---|---|---|---|---|---|
| Pre-read block | Execution block | | Pre-read block | Execution block | |
| #4101 | #4301 | | #4111 | #4311 | |
| #4102 | #4302 | 2nd miscellaneous function B | #4112 | #4312 | |
| #4103 | #4303 | | #4113 | #4313 | Miscellaneous function M |
| #4104 | #4304 | | #4114 | #4314 | Sequence number N |
| #4105 | #4305 | | #4115 | #4315 | Program number O (*1) |
| #4106 | #4306 | | #4116 | #4316 | |
| #4107 | #4307 | | #4117 | #4317 | |
| #4108 | #4308 | | #4118 | #4318 | |
| #4109 | #4309 | Feedrate F | #4119 | #4319 | Spindle function S |
| #4110 | #4310 | | #4120 | #4320 | Tool function T (*2) |
| | | | #4130 | #4330 | Extended workpiece coordinate system No. P |

(*1) Programs are registered as files. When the program No. (file name) is read with #4115, #4315, the character string will be converted to a value.

(Example 1)

The file name "123" is the character string of "0x31", "0x32", and "0x33". Thus, the value is as follows:

(0x31-0x30)*100 + (0x32-0x30)*10 + (0x33-0x30) = 123.0

Note that if the file name contains characters other than numbers, it will be "blank".

(Example 2)

If the file name is "123ABC", it contains characters other than numbers, so the result will be "blank".

(*2) The tool number is read with omitted by the number of digits in the compensation number that is designated in the parameter "#1097 T1digt".

# 23.4 System Variables (Modal Information at Macro Interruption)

**Detailed description**

Modal information when control passes to the user macro interruption program can be known by reading system variables #4401 to #4520.
The unit specified with a command applies.

| System variable | Modal information | |
|---|---|---|
| #4401<br>:<br>#4421 | G code (group 01)<br>:<br>G code (group 21) | Some groups are not used. |
| #4507 | D code | |
| #4509 | F code | |
| #4511 | H code | |
| #4513 | M code | |
| #4514 | Sequence number N | |
| #4515 | Program number O (*1) | |
| #4519 | S code | |
| #4520 | T code | |

The above system variables are available only in the user macro interrupt program.
If they are used in other programs, program error (P241) will occur.

(*1) Programs are registered as files. When the program No. (file name) is read with #4515, the character string will be converted to a value.

(Example 1)

The file name "123" is the character string 0x31, 0x32, 0x33, so the value will be (0x31-0x30)*100 + (0x32-0x30)*10 + (0x33-0x30) = 123.0.
Note that if the file name contains characters other than numbers, it will be "blank".

(Example 2)

If the file name is "123ABC", it contains characters other than numbers, so the result will be "blank".

### Modal information affected by user macro interruption

If modal information is changed by the interrupt program, it is handled as follows after control returns from the interrupt program to the main program.

| | |
|---|---|
| Returning with M99; | The change of modal information by the interrupt program is invalidated and the original modal information is restored.<br>With interrupt type 1, however, if the interrupt program contains a move or miscellaneous function (MSTB) command, the original modal information is not restored. |
| Returning with M99P__ ; | The original modal information is updated by the change in the interrupt program even after returning to the main program. This is the same as in returning with M99P__; from a program called by M98, etc. |

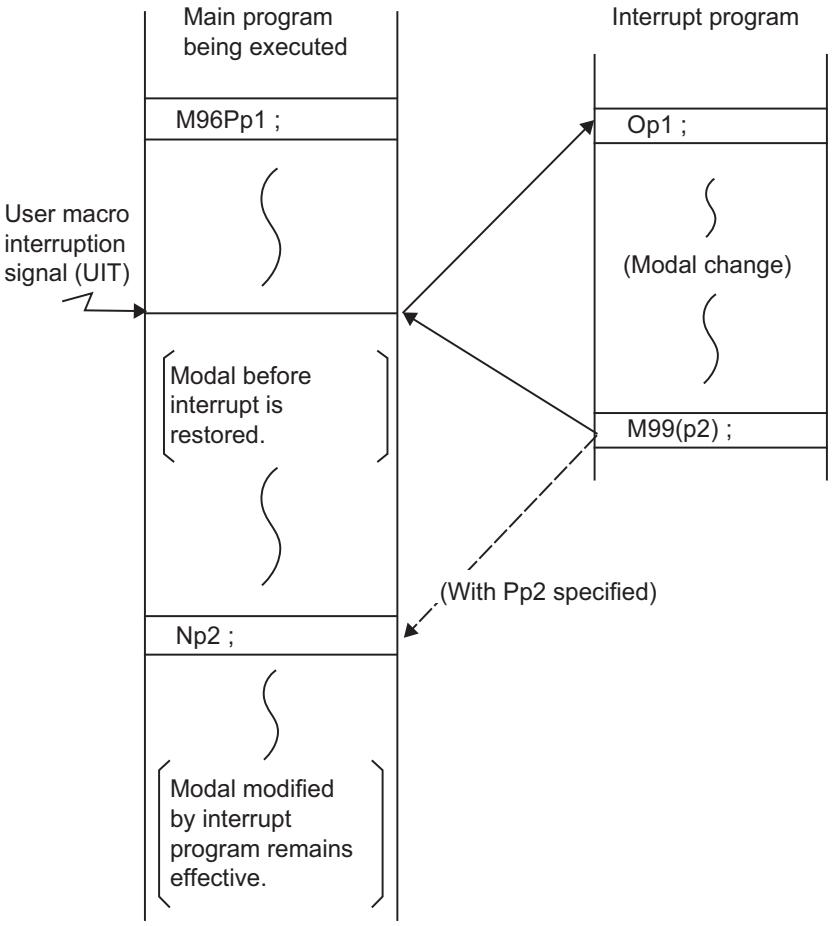


Modal information affected by user macro interruption

# 23.5 System Variables (Tool Information)

## Tool management (#68000 - #68003)

<table>
<tr><th>Variable No.</th><th colspan="2">Item / Description</th><th>Data range</th><th>Attribute</th></tr>
<tr><td>#68000</td><td>Tool designation method</td><td>Method to designate the tool to be read or written<br>1: In-use tool designation<br>2: Tool number designation<br>3: Tool management screen registration number designation</td><td>1 to 3</td><td>-/W</td></tr>
<tr><td>#68001</td><td>Tool selection No.</td><td>Designate the tool selection number that matches the setting of "#68000".
<table>
<tr><th>#68000</th><th>Details of "#68001"</th><th>Data range</th></tr>
<tr><td>1</td><td>ATC magazine number<br>(Used only when the ATC is added.)</td><td>0 to 5</td></tr>
<tr><td>2</td><td>Tool No. (T No.)<br>(Tool No. and compensation No. for lathe system)</td><td>1 to 99999999</td></tr>
<tr><td>3</td><td>Tool management screen registration number</td><td>1 to Number of managed tools</td></tr>
</table></td><td>Refer to the "Description" column.</td><td>-/W</td></tr>
<tr><td>#68003</td><td>Top vacant registration number on tool management screen</td><td>The tool number indicates a vacant line number.<br>0: No vacant registration number<br>1 to 999: Vacant registration number</td><td>0 to 999</td><td>R/-</td></tr>
</table>

- If you command to read data to a write only variable or write to a read only variable, a program error (P241) will occur.
- If a value exceeding the allowable range is issued, a program error (P35) will occur.

(1) Tool designation method (#68000), Tool selection number (#68001)

Substitute a value to the parameters "#68000" and "#68001" to designate the tool to be read and written with the parameters "#68011" to "#68111".
The tool designation methods are classified into three types as shown below.

| Tool designation method | Details | "#68000" setting value | "#68001" setting value |
|---|---|---|---|
| In-use tool designation | Reads or writes tool management data of the tool in use. | 1 | ATC magazine No. |
| Tool number designation | Reads or writes tool management data designated with the tool number. | 2 | Tool No. (T No.) |
| Tool management screen registration number designation | Reads or writes tool management data designated with the registration number. | 3 | Tool management screen registration number |

(a) In-use tool designation (#68000=1)

For the in-use tool, when the R register is checked in the order from "1" to "3" shown below, if the value designated in the R register is other than "0", it is judged to be the in-use tool number.

- Tool life management spindle tool number in machining center system (R12200: 1st part system to R12270: 8th part system)
- ATC spindle tool number (R10620: magazine 1 to R10660: magazine 5)
- T code data (R536)

"#68001" designates the ATC magazine number.

If ATC is not used, this item does not need to be designated.

The "#68001" setting value has the meanings shown below.

| "#68001" setting value | Meaning |
|---|---|
| "0" or no "#68001" command | Magazine 1 |
| 1 to 5 | Magazine 1 to magazine 5 |

**Note**

- The in-use tool is determined when "#68000=1" or "#68001" is commanded.
  To designate the tool which is exchanged after the in-use tool has been determined as an in-use tool, command "#68000=1" or "#68001" again.

(b) Tool number designation (#68000=2)

"#68001" designates the tool number.
In the lathe system, designate the T code (tool number and tool compensation number).

(c) Tool management screen registration number designation (#68000=3)

"#68001" designates the tool management screen registration number (line number).

**Note**

- If "#68000" is commanded multiple times, the last designation method will be valid.
- "#68000" and "#68001" are valid until they are reset. When the power is turned ON or when the system is reset, "0" is set.
- When #68000 is 2, and when there are multiple tools which have the same tool number and the same tool compensation number as the ones designated by "#68001", the tool that has been found first will be selected.
- A program error (P245) will occur when:

  "#68000" is not designated;

  "#68000=1 ;" is commanded while the in-use tool number is set to "0";

  "#68000=1 ;" is commanded while the in-use tool number is not registered on the tool management screen;

  "#68000=2 ;" is commanded while a read/write command is issued using "#68011" to "#68111" without commanding "#68001";

  a tool not registered on the tool management screen with "#68011" is designated during the "#68000=2 ;" command;

  a write command is issued with "#68011" during the "#68000=2 ;" command;

  "#68000=3 ;" is commanded while a read/write command is issued using "#68011" to "#68111" without commanding "#68001";

  "#68001=0 ;" is commanded.

(2) Top vacant registration number on tool management screen (#68003)

Designating this value reads the top vacant registration number on the tool management screen with "#68003".

Use example:

Follow the procedure below to measure the compensation amount with the measurement macro, etc. and search for and register a vacant registration number when registering a new tool.

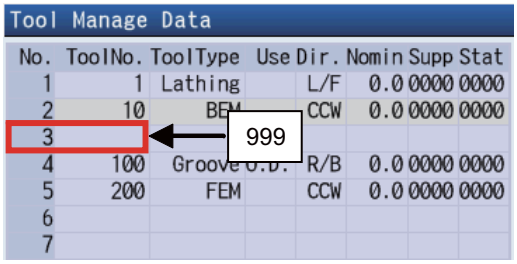


[Measurement macro program]

:

#68000 = 3 ;

| | |
|---|---|
| : | Measurement |
| #68001=#68003 ; | Searches for a vacant registration number (No.3 in the example above), and designates registration number 3. |
| #68011=999 ; | Sets "999" to the tool management data "tool number" of tool management screen registration number 3. |

**Note**

- If no vacant registration number is found because all numbers are registered, "0" is set when "#68003" is read out.
  When "#68001=#68003;", "#68001" is set to "0", and a program error (P245) will occur.

## Basic information ("#68011" to "#68023")

| Variable No. | Item / Description | | Data range | Attri-bute |
|---|---|---|---|---|
| #68011 | Tool No. | | 0 to 99999999 | R/W |
| #68012 | Name | | Eight one-byte alphanu-meric characters | R/W |
| #68013 | Type | 0: No setting<br>1: Ball end mill<br>2: Flat end mill<br>3: Drill<br>4: Radius end mill<br>5: Chamfering<br>6: Tapping<br>7: Face mill<br>51: Turning<br>52: Slotting<br>53: Thread cutting<br>54: Turning drill<br>55: Turning tap | 0 to 7, 51 to 55 | R/W |
| #68014 | Usage | 0: No setting<br>1: External diameter<br>2: Internal diameter<br>3: Face | 0 to 3 | R/W |
| #68015 | Direction: hand/ro-tation | <Mill tool, turning drill, turning tap><br>0: CW<br>1: CCW<br>2: CW<br>3: CW<br><Turning, slotting, thread cutting><br>0: Right hand / Front<br>1: Left hand / Front<br>2: Right hand / Rear<br>3: Left hand / Rear | 0 to 3 | R/W |
| #68016 | Call | | 0.0 to 999.9 (mm)<br>0.00 to 99.99 (inch) | R/W |
| #68017 | Number of blades | | 0 to 9 | R/W |
| #68018 | Tool ID | | Eight one-byte alphanu-meric characters | R/W |
| #68019 | Supplementary information | | 0 to 65535 | R/W |
| #68020 | Conditions | | 0 to 65535 | R/- |
| #68021 | Mounting angle | | 0.0 to 359.999 (degree) | R/W |
| #68023 | Gang tool offset J [M8] | | ±9999.999 (mm)<br>±999.9999 (inch) | R/W |

♦If a value exceeding the allowable range is issued, a program error (P35) will occur.

(1) Tool No. ("#68011")

The registered tool cannot be registered. If a tool is registered, the operation will be performed as shown below.

| Type | | Operation performed when a registered tool is designated |
|---|---|---|
| Machining center system | Life management I | Program error (P245) |
| | Life management II | Program error (P245) |
| | Life management III | Program error (P245) |
| | The life management specifications are invalid. | Program error (P245) |
| Lathe system | Life management I | Program error (P245) |
| | Life management II | Can be registered. |
| | The life management specifications are invalid. | Can be registered. |

Example: When an attempt is made to change tool management data "tool number" of No.3 (3rd line) from "11" to "1" in life management II of the machining center system, the setting is as follows.

Tool Manage Data

| No. | ToolNo. | ToolType | Use | Dir. | Nomin | Supp | Stat |
|---|---|---|---|---|---|---|---|
| 1 | 1 | FEM | | CCW | 0.0 | 0000 | 0000 |
| 2 | 2 | BEM | | CCW | 0.0 | 0000 | 0000 |
| 3 | 11 | L-drill | | CW | 0.0 | 0000 | 0000 |
| 4 | 12 | Lathing | O.D. | R/F | 0.0 | 0000 | 0000 |

#68000=3 Tool management screen registration number designation

#68001=3 Designates No. 3 (3rd line)

#68013=1 Tool No. 1 is already registered with No. 1 (1st line), causing a program error (P245).

(2) Tool name ("#68012"), Tool ID ("#68018"), Material ("#68053")

(a) Read

Reads data only with the variable No. designation of the DPRNT command.

Example 1: DPRNT [#68012] ; The tool name is read.

Example 2: #100=#68012 ; A program error (P243) will occur.

(b) Write

A string can be designated by enclosing it in parentheses ( ).

Example 1: #68012=(M-TOOL1) ; Data is written up to the number of valid characters, and the rest is ignored.

Example 2: #68012=#0 ; A string is cleared by writing "null" characters.

Example 3: #68012= M-TOOL1 ; If parentheses are omitted, a program error will occur.

(3) Type ("#68013") to tool nose point P ("#68111")

A program error will occur in the following case.

| Operation | Operation result |
|---|---|
| Type ("#68013") to tool nose point P ("#68111") is read or written for the registration number with the tool number unspecified. | Program error (P245) |

(4) Compensation amount ("#68103" to "#68111")

A program error will occur in the following case.

| Operation | Operation result |
|---|---|
| The compensation amount ("#68103" to "#68111") is read or written for the tool with the compensation number unspecified. | Program error (P170) |

(5) Tool life ("#68082" to "#68086")

A program error will occur in the following case.

| Operation | Operation result |
|---|---|
| The tool life ("#68082" to "#68086") is read or written for the tool with the tool life group number unspecified in tool life management I and II of the machining center system, or in tool life management II of the lathe system. | Program error (P179) |

## Shape information ("#68031" to "#68040")

| Variable No. | Item / Description | | Data range | Attribute |
|---|---|---|---|---|
| #68031 - #68039 | Tool shapes A to I | | Length:<br>0 to 9999.999 (mm)<br>0 to 999.9999 (inch)<br>Angle:<br>0 to 180.000 (degree) | R/W |
| #68040 | Tool color | 1: Gray<br>2: Red<br>3: Yellow<br>4: Blue<br>5: Green<br>6: Light blue<br>7: Purple<br>8: Pink | 1 to 8 | R/W |

♦If a value exceeding the allowable range is issued, a program error (P35) will occur.

## Cutting conditions ("#68051" to "#68054")

| Variable No. | Item / Description | Data range | Attribute |
|---|---|---|---|
| #68051 | Spindle rotation speed S | 0 to 99999999 | R/W |
| #68052 | Feedrate F | 0 to 1000000 (mm/min)<br>0 to 100000 (inch/min) | R/W |
| #68053 | Material | Four one-byte alphanu-meric characters | R/W |
| #68054 | Coolant M code | 0 to 99999999 | R/W |

♦If a value exceeding the allowable range is issued, a program error (P35) will occur.

## Additional information ("#68061" to "#68072")

| Variable No. | Item / Description | Data range | Attribute |
|---|---|---|---|
| #68061 - #68066 | Customize 1 to 6 | ±999999999 (*1) | R/W |
| #68067 - #68072 | Customize 7 to 12 | ±9999.999 (*1) | R/W |

(*1) For customize data 1 to 12, the data range varies depending on the data format.

♦If a value exceeding the allowable range is issued, a program error (P35) will occur.

### Tool life (#68081 to #68088)

| Variable No. | Item / Description | | Attribute |
|---|---|---|---|
| | Tool life management I | Tool life management II | |
| #68081 | (Not used) | Group No. (0 to 9999) | R/W |
| #68082 | Status A (0 to 2) | Status (0 to 3) | R/W |
| #68083 | (Not used) | Method (0 to 1) | R/W |
| #68084 | Status B (0 to 99) | (Not used) | R/W |
| #68085 | Estimated tool life (hours) (0 to 5999 min.) | Estimated tool life (hours)/Estimated number of cuttings<br>(0 to 999999 min. / 0 to 999999 sets) | R/W |
| #68086 | Cumulative cutting hours (0 to 5999 min.) | Cumulative cutting hours/Cumulative number of cuttings<br>(0 to 999999 min. / 0 to 999999 sets) | R/W |
| #68087 | Estimated number of cuttings<br>(0 to 65000 sets) | (Not used) | R/W |
| #68088 | Cumulative number of cuttings<br>(0 to 65000 sets) | (Not used) | R/W |

- If an unused variable is commanded, a program error (P241) will occur.
- If a value exceeding the allowable range is issued, a program error (P35) will occur.

**Compensation amount ("#68101" to "#68113")**

| Variable No. | Item / Description | | | Attri-bute |
|---|---|---|---|---|
| | Compensation type I | Compensation type II | Compensation type III | |
| #68101 | No. H (0 to number of tool offset sets) | No. H (0 to number of tool offset sets) | Tool length compensation No.<br>(0 to number of tool offset sets) | R/W |
| #68102 | (Not used) | No. D (0 to number of tool offset sets) | Wear compensation No.<br>(0 to number of tool offset sets) | R/W |
| #68103 | Tool length<br>(±9999.999999 (mm)<br>±999.9999999 (inch)) | Length dimension<br>(±9999.999999 (mm)<br>±999.9999999 (inch)) | Tool length X<br>(±9999.999999 (mm)<br>±999.9999999 (inch)) | R/W |
| #68104 | (Not used) | (Not used) | Tool length Z<br>(±9999.999999 (mm)<br>±999.9999999 (inch)) | R/W |
| #68105 | (Not used) | (Not used) | Additional axis tool length<br>(±9999.999999 (mm)<br>±999.9999999 (inch)) | R/W |
| #68106 | (Not used) | Length wear<br>(±9999.999999 (mm)<br>±999.9999999 (inch)) | Wear X<br>(±9999.999999 (mm)<br>±999.9999999 (inch)) | R/W |
| #68107 | (Not used) | (Not used) | Wear Z<br>(±9999.999999 (mm)<br>±999.9999999 (inch)) | R/W |
| #68108 | (Not used) | (Not used) | Additional axis wear<br>(±9999.999999 (mm)<br>±999.9999999 (inch)) | R/W |
| #68109 | (Not used) | Radius dimension<br>(±9999.999999 (mm)<br>±999.9999999 (inch)) | Tool nose radius<br>(±9999.999999 (mm)<br>±999.9999999 (inch)) | R/W |
| #68110 | (Not used) | Radius wear<br>(±9999.999999 (mm)<br>±999.9999999 (inch)) | Radius wear<br>(±9999.999999 (mm)<br>±999.9999999 (inch)) | R/W |
| #68111 | (Not used) | (Not used) | Tool nose point P<br>(0 to 9) | R/W |
| #68112 | (Not used) | (Not used) | 2nd additional axis tool length [M8]<br>(±9999.999999 (mm)<br>±999.9999999 (inch)) | R/W |
| #68113 | (Not used) | (Not used) | 2nd additional axis wear [M8]<br>(±9999.999999 (mm)<br>±999.9999999 (inch)) | R/W |

- If an unused variable is commanded, a program error (P241) will occur.
- If a value exceeding the allowable range is issued, a program error (P35) will occur.

# 23.6 System Variables (Tool Offset)

## Detailed description

This function reads or sets tool offset data using a variable No.

| Variable number range | | | Description |
|---|---|---|---|
| | #1120 TofVal = 0 | #1120 TofVal = 1 | |
| #10001 - #10000+n | #2001 - #2000+n | #2701 - #2700+n | X shape compensation amount |
| #11001 - #11000+n | #2701 - #2700+n | #2001 - #2000+n | X wear compensation amount |
| #12001 - #12000+n | | | Additional axis shape compensation amount |
| #13001 - #13000+n | | | Additional axis wear compensation amount |
| #28001 - #28000+n | | | Tool length compensation amount for the 2nd additional axis [M8] |
| #29001 - #29000+n | | | Tool wear compensation amount for the 2nd additional axis [M8] |
| #14001 - #14000+n | #2101 - #2100+n | #2801 - #2800+n | Z shape compensation amount |
| #15001 - #15000+n | #2801 - #2800+n | #2101 - #2100+n | Z wear compensation amount |
| #16001 - #16000+n | #2201 - #2200+n | #2901 - #2900+n | R shape compensation amount |
| #17001 - #17000+n | #2901 - #2900+n | #2201 - #2200+n | R wear compensation amount |
| #18001 - #18000+n | #2301 - #2300+n | | Nose compensation amount |

"n" in the table corresponds to the tool No. Maximum "n" value is the number of tool compensation sets.
The #10000s and #2000s are equivalent functions.
The tool offset data has a decimal point in the same way as other variables.
If "#10001=1000;" is programmed, "1000.000" is set to tool offset data.
The additional axes' tool compensation can be used for only either the 3rd axis or 4th axis.
Whether to use either one depends on the MTB specifications (parameter "#1520 Tchg34)").
The variable No. corresponding to the #2000s' shape/wear compensation amount can be changed with the parameter "#1120 TofVal".

Programming example

```
#101=1000;
#10001=#101;
#102=#10001;
```

Common variable

```
#101=1000.0
#102=1000.0
```

Tool offset data

```
H1=1000.000
```

Example 1: Tool offset data measurement example

| | |
|---|---|
| G28X0 T0101 ; | Reference position return |
| M06; | Tool change (T0101) |
| #1=#5001; | Start point memory |
| G00 X-200 ; | Rapid traverse to safe position |
| G31 X-50.F100 ; | Skip measurement |
| #10001=#5061-#1; | Measurement distance calculation and tool offset data set |

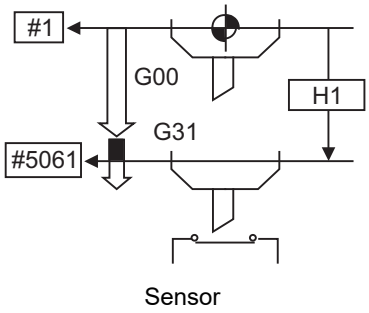

### Note

(1) In (Example 1), no consideration is given to the delay in the skip sensor signal.
#5001 is the X axis start point position and #5061 indicates the position at which the skip signal is input while G31 is being executed in the X axis skip coordinates.

(2) When multi-part system

There are cases when each part system has tool data, and cases when the part systems share common tool data. This can be selected with parameter (#1051 MemTol).

Parameter #1051 MemTol
0: Tool data is provided for each part system.
1: Common tool data is shared by part systems.

When the tool data is shared by the part systems, the read amount and substitution value for all part systems' tool compensation variables will be the same (when the same variable No. is commanded).

(3) Whether to enable or disable the tool compensation for the 2nd additional axis function and which axis is to be used as the 2nd additional axis vary depending on the MTB specifications (parameters "#12103 2nd add T-ofs ON" and "#12104 2nd add T-ofs set").

# 23.7 System Variables (Tool Life Management)

## Detailed description

### Definition of variable Nos.

(1) Group number designation

#60000

Assign the value to this variable No. to designate the group number of the tool life management data to be read with parameters "#60001" to "#63016". If a group No. is not designated, the data of the group registered first is read. This is valid until reset.

(2) Tool life management system variable No. (Read)

#60001 to #63016

# | a | b | c | d | e |

| a | : Fixed to "6" (Tool life management)

| b | c | : Details of data classification

| Data class | Details | Remarks |
|---|---|---|
| 00 | For control | Refer by data types |
| 05 | Group No. | Refer by registration No. |
| 10 | Tool No. | Refer by registration No. |
| 15 | Method | Refer by registration No. |
| 20 | Status | Refer by registration No. |
| 25 | Estimated tool life (hours)/Estimated number of cuttings | Refer by registration No. |
| 30 | Cumulative cutting hours/Cumulative number of cuttings | Refer by registration No. |

The group No., method, and estimated tool life data are common to all groups.

| d | e | : Registration No. or data type

Registration No.

| |
|---|
| 1 to 16 |

Data type

| Type | Details |
|---|---|
| 1 | Number of registered tools |
| 2 | Tool life data (current value) |
| 3 | Tool selection No. |
| 4 | Number of remaining registered tools |
| 5 | Execution signal |
| 6 | Cumulated cutting time (min) |
| 7 | Signal to indicate tool life over |

**List of variables**

| Variable No. | Item | Type | Details | Data range |
|---|---|---|---|---|
| 60001 | Number of registered tools | Common to part systems | Total number of tools registered in each group. | 0 to 80 |
| 60002 | Tool life data (current value) | For each group (*1) | "Cumulative cutting hours" and "Cumulative number of cuttings" of a tool in use<br>Cumulative usage data of the tool in use (total of usage data for each compensation number when multiple compensation numbers are used for the tool) | 0 to 999999 min.<br>0 to 999999 sets |
| 60003 | Tool selection No. | | Tool registration number of the tool in use<br>This number is a registration number of the selected tool in the designated group. Supplimentary explanation for the selected tool is provided as follows:<br>•If there is no selected tool, the first tool of the tools with "ST" set to "1" is selected.<br>•If there is no tool with "ST" set to "1", the first tool of the tools with "ST" set to "0" is selected.<br>•If all tools have reached the end of their tool lives, the last tool is selected. | 0 to 16 |
| 60004 | Number of remaining registered tools | | Total number of "available" tools in this group<br>This is a number of tools with "ST" set to "0" (unused tool) among the registered tools in a designated group. | 0 to 16 |
| 60005 | Execution signal | | The value is set to "1" when this group is used in the program being executed.<br>The value is set to "1" when the tool registered to the designated group is selected. | 0/1 |
| 60006 | Cumulated cutting time (min) | | Indicates the accumulated time that this group was used in the program being executed. | (Not used) |
| 60007 | Signal to indicate that tool life is over | | The value is set to "1" when all tools in this group have reached the end of their tool lives.<br>The value is set to "1" when all registered tools in the designated group have reached the end of their tool lives. | 0/1 |

(*1) Designate group number "#60000".

### Program example

(1) Normal commands

| | |
|---|---|
| #101 = #60001 ; | Reads the number of registered tools. |
| #102 = #60002 ; | Reads the tool life data (current value). |
| #103 = #60003 ; | Reads the tool selection No. |
| #60000 = 10 ; | Designates the group No. of the tool of which the tool life data is to be read.<br>Designated group No. is valid until reset. |
| #104 = #60004 ; | Reads the remaining number of registered tools of group 10. |
| #105 = #60005 ; | Reads the execution signal of group 10. |
| #111 = #61001 ; | Reads the tool No. allocated to #1 of group 10. |
| #112 = #62001 ; | Reads the status displayed in #1 of group 10. |
| #113 = #61002 ; | Reads the tool No. allocated to #2 of group 10. |
| % | |

(2) When the group number is not designated:

| | |
|---|---|
| #104 = #60004 ; | Reads the remaining number of registered tools of the first registered group. |
| #111 = #61001 ; | Reads the tool No. of #1 of the first registered group. |
| % | |

(3) When an unregistered group number is designated (group 9999 does not exist):

| | |
|---|---|
| #60000 = 9999 ; | Designates the group No. |
| #104 = #60004 ; | The value of #104 will be "-1". |

(4) When an unused registration number is designated (15 tools for group 10):

| | |
|---|---|
| #60000 = 10 ; | Designates the group No. |
| #111 = #61016 ; | The value of #111 will be "-1". |

(5) When a registration number not defined in the specifications is designated:

| | |
|---|---|
| #60000 = 10 ; | |
| #111 = #61017 ; | Program error (P241) |

(6) When tool life management data is registered with the G10 command after a group number has been designated:

| | |
|---|---|
| #60000 = 10 ; | Designates the group No. |
| G10 L3 ; | Starts registration of the tool life management data.<br>The tool life data of group 10 is registered through the commands between G10 and G11. |
| P10 LLn NNn ; | "10" is the group No., "Ln" is the tool life for a tool, "Nn" is the method. |
| TTn ; | "Tn" is the tool No. |
| : | |
| G11; | Registers data in group 10 with the G10 command. |
| #111 = #61001 ; | Reads the tool No. allocated to #1 of group 10. |
| G10 L3 ; | Starts registration of the tool life management data.<br>The tool life data of the group other than group 10 is registered through the commands between G10 and G11. |
| P1 LLn NNn ; | "1" is the group No., "Ln" is the tool life for a tool, "Nn" is the method. |
| TTn ; | "Tn" is the tool No. |
| : | |
| G11; | Registers the tool life data with the G10 command.<br>(The registered data is deleted.) |
| #111 = #61001 ; | Group 10 does not exist. The value of #111 will be "-1". |

### Precautions

(1) If a system variable for tool life management is commanded without designating a group No., the data of the group registered at the head of the registered data will be read.

(2) If a system variable for tool life management is commanded with non-registered group No., "-1" will be read as the data.

(3) If a system variable for tool life management is commanded with the registered No. is not in use, "-1" will be read as the data.

(4) Once commanded, the group No. is valid until NC reset.

(5) When the tool life management I specifications are provided, the tool life management system variable specifications are not provided. A program error (P241) will occur if commanded.

# 23.8 System Variables (Workpiece Coordinate Offset)

## Detailed description

By using variable Nos #5201 to #532n, it is possible to read out the workpiece coordinate system compensation data or to substitute values.

### Note

(1) The number of controllable axes varies depending on the specifications.
The last digit of the variable No. corresponds to the control axis No.

| Coordinate name | 1st axis | 2nd axis | 3rd axis | 4th axis | ..... | nth axis | Remarks |
|---|---|---|---|---|---|---|---|
| External workpiece offset | #5201 | #5202 | #5203 | #5204 | ..... | #520n | External workpiece offset specifications are required. |
| G54 | #5221 | #5222 | #5223 | #5224 | ..... | #522n | Workpiece coordinate system offset specifications are required. |
| G55 | #5241 | #5242 | #5243 | #5244 | ..... | #524n | |
| G56 | #5261 | #5262 | #5263 | #5264 | ..... | #526n | |
| G57 | #5281 | #5282 | #5283 | #5284 | ..... | #528n | |
| G58 | #5301 | #5302 | #5303 | #5304 | ..... | #530n | |
| G59 | #5321 | #5322 | #5323 | #5324 | ..... | #532n | |

(Example 1)

```
N1 G28 X0  Z0 ;
N2 #5221=-20. #5222= - 20. ;
N3 G00 G54 X0 Z0 ;
      ~
N10 #5221= -10. #5222= - 90. ;
N11 G00 G54 X0Z0 ;
      ~
M02 ;
```

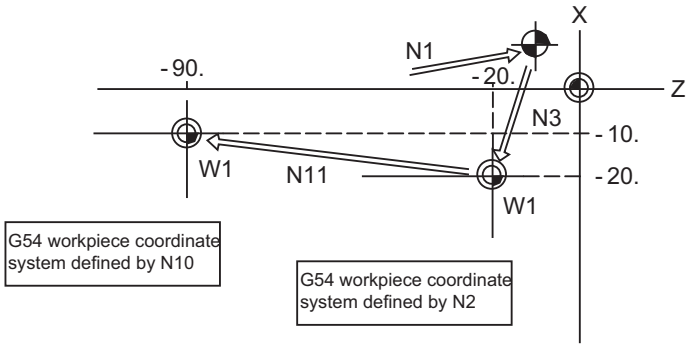


(Example 2)

```
      ~
N100 #5221=#5221+#5201 ;
     #5222=#5222+#5202 ;
     #5241=#5241+#5201 ;
     #5242=#5242+#5202 ;
     #5201=0 #5202=0;
      ~
```

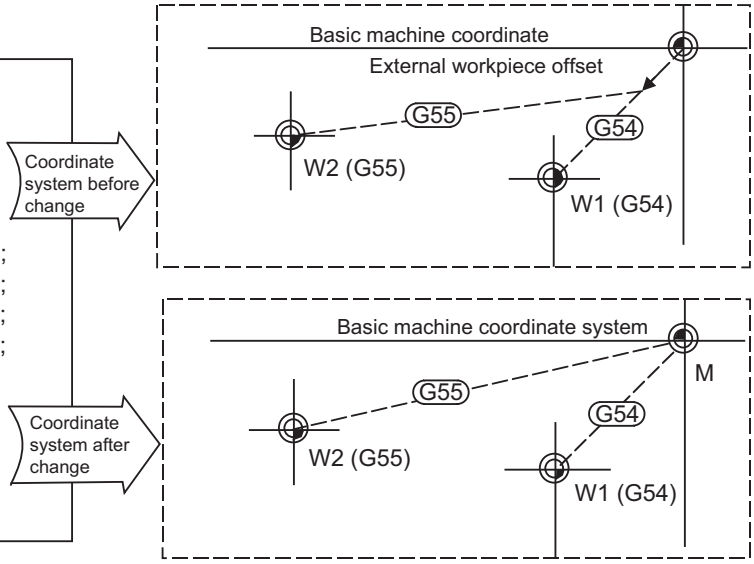


This is an example where the external workpiece compensation values are added to the workpiece coordinate (G54, G55) system compensation values without changing the position of the workpiece coordinate systems.

# 23.9 System Variables (Extended Workpiece Coordinate Offset)

## Detailed description

### #7001 to #794n (48-set specification)

By using variable Nos #7001 to #794n, it is possible to read out the extended workpiece coordinate system compensation data or to substitute values.

**Note**

(1) The system variables #7001 to #794n are available up to the valid number of sets. The last digit of the variable No. corresponds to the control axis No.

[Table 1] System variables for extended workpiece coordinate system compensation (n=1 to 8)

| | 1st axis to nth axis | | 1st axis to nth axis |
|---|---|---|---|
| P1 | #7001 to #700n | P25 | #7481 to #748n |
| P2 | #7021 to #702n | P26 | #7501 to #750n |
| P3 | #7041 to #704n | P27 | #7521 to #752n |
| P4 | #7061 to #706n | P28 | #7541 to #754n |
| P5 | #7081 to #708n | P29 | #7561 to #756n |
| P6 | #7101 to #710n | P30 | #7581 to #758n |
| P7 | #7121 to #712n | P31 | #7601 to #760n |
| P8 | #7141 to #714n | P32 | #7621 to #762n |
| P9 | #7161 to #716n | P33 | #7641 to #764n |
| P10 | #7181 to #718n | P34 | #7661 to #766n |
| P11 | #7201 to #720n | P35 | #7681 to #768n |
| P12 | #7221 to #722n | P36 | #7701 to #770n |
| P13 | #7241 to #724n | P37 | #7721 to #772n |
| P14 | #7261 to #726n | P38 | #7741 to #774n |
| P15 | #7281 to #728n | P39 | #7761 to #776n |
| P16 | #7301 to #730n | P40 | #7781 to #778n |
| P17 | #7321 to #732n | P41 | #7801 to #780n |
| P18 | #7341 to #734n | P42 | #7821 to #782n |
| P19 | #7361 to #736n | P43 | #7841 to #784n |
| P20 | #7381 to #738n | P44 | #7861 to #786n |
| P21 | #7401 to #740n | P45 | #7881 to #788n |
| P22 | #7421 to #742n | P46 | #7901 to #790n |
| P23 | #7441 to #744n | P47 | #7921 to #792n |
| P24 | #7461 to #746n | P48 | #7941 to #794n |

# 23.10 System Variables (External Workpiece Coordinate Offset / Workpiece Coordinate System Shift)

## Detailed description

### External workpiece coordinate system offset

The workpiece coordinate system compensation amount can be read using variables #2501 and #2601.
By substituting a value in these variable Nos., the workpiece coordinate system compensation amount can be changed.

| System variable No. | External workpiece coordinate system offset amount |
|---|---|
| #2501 | 1st axis |
| #2601 | 2nd axis |

### Workpiece coordinate system shift

When the workpiece coordinate system shift function is enabled, "#2501" and "#2601" are used to acquire or set the workpiece coordinate system shift amount (parameter "#11056 Workshift invalid").

| System variable No. | Workpiece coordinate system shift amount |
|---|---|
| #2501 | 1st axis |
| #2601 | 2nd axis |

# 23.11 System Variables (Position Information)

## Detailed description

Using variable Nos. #5001 to #5160+n, it is possible to read the end point coordinates of the last block, machine coordinates, workpiece coordinates, skip coordinates and servo deviation amounts.

| Position information | | | | Axis No. (in part system) | | | | | Reading during movement |
|---|---|---|---|---|---|---|---|---|---|
| | | | | 1 | 2 | 3 | ... | n | |
| End point coordinate of the last block | | | | #5001 | #5002 | #5003 | ... | #5000+n | Enabled |
| Machine coordinate | | | | #5021 | #5022 | #5023 | ... | #5020+n | Disabled |
| Workpiece coordinate | | | | #5041 | #5042 | #5043 | ... | #5040+n | Disabled |
| Skip coordinate | Parameters #8713 | 0 | Workpiece coordinate system | #5061 | #5062 | #5063 | ... | #5060+n | Enabled |
| | | 1 | Feature coordinate | | | | | | |
| | Feature coordinate | | | #5161 | #5162 | #5163 | ... | #5160+n | |
| Servo deviation amount | | | | #5101 | #5102 | #5103 | ... | #5100+n | Enabled |
| Start point coordinates of the block that was interrupted by macro interruption | | | | #5121 | #5122 | #5123 | ... | #5120+n | Enabled |
| End point coordinates of the block that was interrupted by macro interruption | | | | #5141 | #5142 | #5143 | ... | #5140+n | Enabled |

### Note

- The number of axes which can be controlled differs according to the specifications.
  The last digit of the variable No. corresponds to the control axis No.

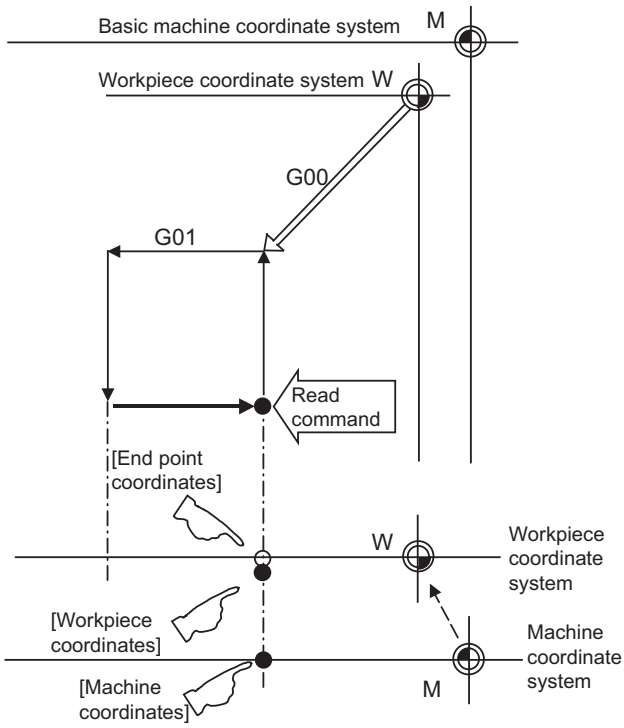

### Note

- During simple inclined surface control (G176) or inclined surface machining command, the coordinates on the feature coordinate system are set to the system variables for position information (#5001 to #5100+n (excluding #5021 to #5021+n)).
  However, the coordinates on the machine coordinate system are set to the variables #5021 to #5021+n (machine coordinate values) even during simple inclined surface control or inclined surface machining command.

(1) The position of the end point coordinates is position on the workpiece coordinate system.

(2) The end point coordinates, skip coordinates and servo deviation amounts can be read even during movement. However, it must first be checked that movement has stopped before reading the machine coordinates and the workpiece coordinates.

(3) The skip coordinates indicates the position where the skip signal is turned ON in the G31 block. If the skip signal does not turn ON. they will be the end point position.
(For further details, refer to the section on Automatic Tool Length Measurement.)

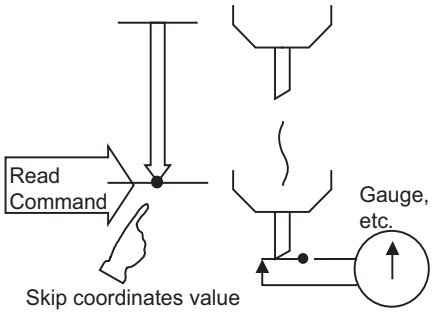


(4) The end point coordinates indicate the tool nose position regardless of the tool compensation and other such factors. On the other hand, the machine coordinates, workpiece coordinates and skip coordinates indicate the tool reference point position with consideration given to tool compensation.

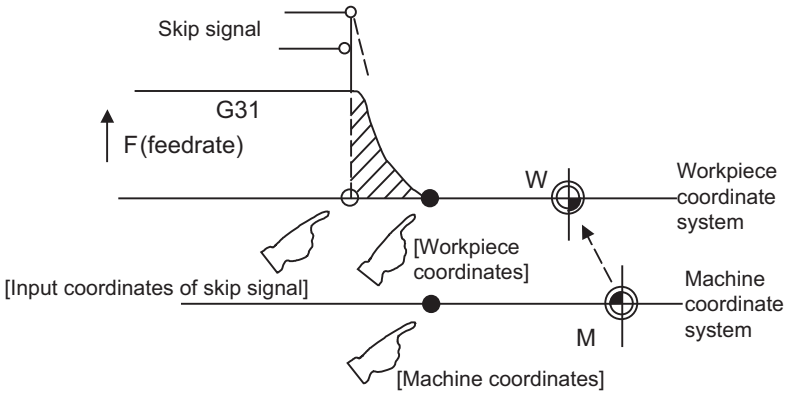


For "●", check stop and then proceed to read.

For "○", reading is possible during movement.

### Note

- Multiple orthogonal axes move simultaneously while the inclined surface machining command is being executed. The moved axis is updated at the workpiece coordinates of the orthogonal axis designated in the rotary axis configuration parameter.
  Therefore, if the skip signal is continuously input to the X, Y, and Z directions, the workpiece coordinate value of the skip coordinates is overwritten.
- While the inclined surface machining command is disabled, the skip coordinate position is read in the workpiece coordinate system of all the axes.
- The skip signal input coordinates value is the position in the workpiece coordinate system.
- The coordinate value in variable Nos. #5061 to #5060+n or #5161 to #5160+n memorize the moments when the skip input signal during movement was input and so they can be read at any subsequent time.
  For details, refer to "22.2 Skip Function; G31".
- When the parameter "#1366 skipExTyp" (Multi-part system simultaneous skip command) is set to "1", the skip coordinate value will be "0", even if G31 command is given in one-part system or G31 command is given in only one of the multiple part systems.

# 23.12 System Variables (Alarm)

### Detailed description

The NC unit can be forcibly set to the alarm state by using variable No. #3000.

| **#3000 = n (ALARM.MESSAGE) ;** | |
|---|---|
| n | Alarm No. (1 to 9999) |
| ALARM.MESSAGE | Alarm message |

Any alarm number from 1 to 9999 can be specified.
The alarm message must be written in not more than 31 half-width characters or 15 full-width characters.
NC alarm 3 signal (program error) is output.
Program execution stops, then "P277 Macro alarm message" and the specified alarm (message and No.) are displayed alternately in the message display area. The above stated items also appears in the [NC message] and [Operator message] fields on the diagnosis screen.

Example of program (alarm when #1 = 0)

| | |
|---|---|
| : | |
| IF[#1 NE 0]GOTO 100 ; | |
| #3000=70 (CALL #PROGRAMMER #TEL #530); | Program error (P277) (*1) |
| N100 | |
| : | |

(*1) "P277 Macro alarm message" and "CALL#PROGRAMMER#TEL#530 70" (specified message and No.) are displayed alternately.

### Note

(1) If "0" or any number greater than "9999" is specified for the alarm No., the number will be invalid and it will not display. However, the operation will be in the alarm status, and the specified alarm message will appear.

(2) Specify the alarm message by enclosing it in round parentheses after the alarm number. If there is any character string between the number and the alarm message enclosed in round parentheses, the alarm message will be invalid and it will not display. However, the operation will be in the alarm status, and the specified alarm No. will appear. When the alarm No. is omitted, the program error (P33) occurs.

(3) When 32 or more half-width characters are specified for the alarm message, characters after the 32nd character will not display.
When the commanded string has 16 or more full-width characters, the 16th and subsequent characters are not displayed.

(4) Spaces included in an alarm message character string are ignored, and will not display. To split the character string insert a character such as "." (period).

(5) Do not use half-width kana characters for the alarm message. A part of half-width kana character string will be missing (for Japanese).

(6) To create a machining program using a general text editor, set the character code according to the language used. For details, refer to "3.2 File Format".

# 23.13 System Variables (Message Display and Stop)

## Detailed description

By using variable No. #3006, the operation stops after the previous block is executed and, if message display data is commanded, the corresponding message and the stop No. will be indicated on the operator message area.

| **#3006 = n (MESSAGE) ;** | |
|---|---|
| n | Stop No. (1 to 9999) |
| MESSAGE | Message |

The message should be written in not more than 31 half-width characters or 15 full-width characters and should be enclosed by round parentheses.

### Note

(1) If "0" or any number greater than "9999" is specified for the stop No., the command is invalid and the program does not stop.

(2) Specify an alarm message by enclosing it in round parenthesis immediately after the stop No. If there is any character string between the number and the message enclosed in round parenthesis, the program error (P33) occurs. When the stop No. is omitted, the program error (P33) occurs as well.

(3) When only the stop No. is specified and no message is specified, nothing is displayed. The program stops without the stop number being displayed.

(4) When 32 or more half-width characters are specified for the message, the 32nd and subsequent characters are not displayed.
When 16 or more full-width characters are specified, the 16th and subsequent characters are not displayed.

(5) Spaces in message strings are ignored and are not displayed on the screen. To separate strings, insert a character such as "." (period).

(6) Do not use half-width kana characters for the message. A part of half-width kana character string will be missing (for Japanese).

(7) To create a machining program using a general text editor, set the character code according to the language used. For details, refer to "3.2 File Format".

### Switching #3006 operation during inhibition of single block stop

The operation when the variable No. #3006 is commanded during inhibition of single block stop by system variable (the variable No. "#3003/bit0" is set to "1") can be switched by the setting of the parameter "#11482 ValBlkStopSelect" (System variable #3006 block stop switch).

| System variable #3003/bit0 | Parameter #11482 | System variable #3006 operation |
|---|---|---|
| 0 | 0 | Block stop is executed with the system variable #3006 and the message is displayed. |
| 0 | 1 | |
| 1 | 0 | Block stop is not executed with the system variable #3006. (The message does not remain.) |
| 1 | 1 | Block stop is executed with the system variable #3006 and the message is displayed. |

# 23.14 System Variables (Cumulative Time)

## Detailed description

The integrating time during the power is turned ON or the automatic start is running, can be read or values can be substituted by using variable Nos. #3001 and #3002.

| Type | Variable No. | Unit | Contents when power is switched on | Initialization of contents | Count condition |
|---|---|---|---|---|---|
| Power-on | 3001 | 1ms | Same as when power is switched off | Substitute values to variables | At all times while power is ON |
| Automatic start | 3002 | | | | In-automatic start |

The cumulative time is reset to "0" at approximately $2.44 \times 10^{11}$ms (approximately 7.7 years).

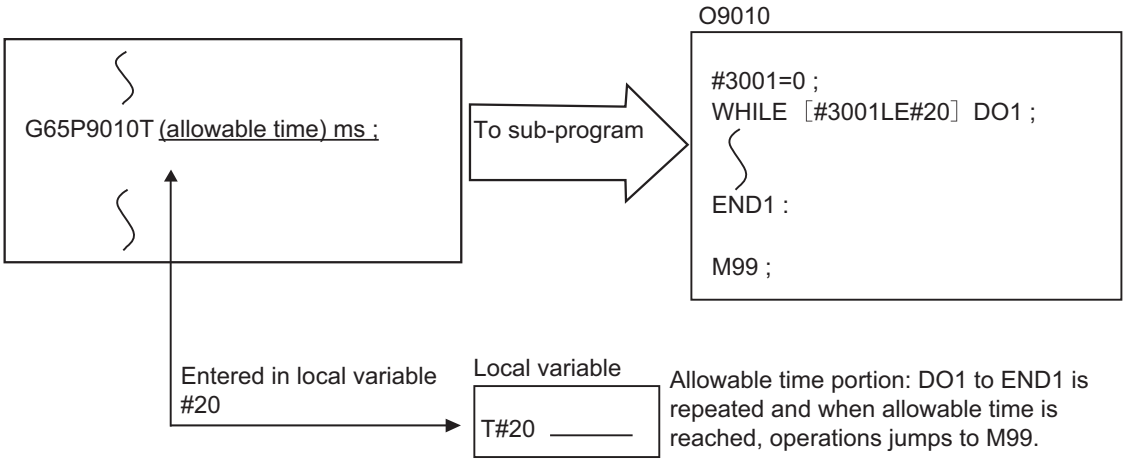

# 23.15 System Variables (Time Read Variables)

**Detailed description**

The following operations can be carried out using the system variable extension for the user macro time.

(1) By adding time information system variable #3011 and #3012, the current date (#3011) and current time (#3012) can be read and written.

(2) By adding parameter #1273/bit1, the unit (millisecond unit/hour unit) of the system variable "#3002" (cumulative time during automatic start) can be changed.

| Variable No. | Details |
|---|---|
| **#3001** | The cumulative time during power ON can be read and the value can be substituted.<br>The unit is millisecond. |
| **#3002** | The cumulative time during automatic start can be read and the value can be substituted.<br>The unit can be changed between millisecond and hour with parameter #1273/bit1. |
| **#3011** | The current date can be read and written.<br>YYYY/MM/DD is read as a YYYYMMDD value.<br>If a value "YYYYMMDD" is written, it is set to YY/MM/DD (the year is indicated by the last two digits).<br>Command range for year/month/day setting: Year (YYYY): 2000 to 2099<br>Month (MM): 1 to 12<br>Day (DD): 1 to maximum number of days in one month |
| **#3012** | The current time can be read and written.<br>HH/MM/SS is read as a value "HHMMSS".<br>When a value "HHMMSS" is written in, it will be set as HH/MM/SS.<br>Command range for time setting: Hour (HH): 0 to 23 (24-hour system)<br>Minute (MM): 0 to 59<br>Second (SS): 0 to 59 |

(3) The cumulative time is reset to "0" at approximately $2.44 \times 10^{11}$ms (approximately 7.7 years).

(4) If a negative value or a value exceeding 244335917226 milliseconds (67871.08811851 hours for #3002 time designation) is set for the cumulative time, a program error (P35) will occur.

(5) If a value exceeding the command range is set for the date or time, a program error (P35) will occur.

(6) Always set the month/date/hour/minute/second as a two-digit value when setting the date and time.
If the value only has one digit, always add 0.
(February 14, 2001 => #3011= 20010214 ;, etc.)

## Program example

### Example of use (#3011, #3012)

(Example 1) To read the current date (February 14, 2001) in common variable #100

#100 = #3011 ; (20010214 is inserted in #100)

(Example 2) To write current time (18 hours, 13 minutes, 6 seconds) into system variable #3012

#3012 = 181306 ; (The command value cumulative time #2: time is set to 18:13:06.)

(Example 3) By setting the following program example, the machining start/end time (year/month/date/hour/minute/second) can be viewed.

```
#100=#3011 ; => Machining start year/month/date
#101=#3012 ; => Machining start hour/minute/second
G28 X0 Y0 Z0 ;

G92 ;
G0 X50. ;
    :
    :
    :
#102=#3011 ;    => Machining end year/month/date
#103=#3012 ;    => Machining end hour/minute/second
M30 ;
```

## Precautions

### Limits and precautions for using time reading variable

(1) #3011 reads the date as an eight-digit value, so the difference between the two dates read in will not be the difference of days.

(2) #3012 reads the time as a six-digit value, so the difference between the two times read in will not be the difference of hours.

# 23.16 System Variables (Machining Information)

## Detailed description

### Contents of variable No. "#3003"

By substituting the values below in variable No. #3003, it is possible to suppress single block stop in the subsequent blocks or to advance to the next block without waiting for the miscellaneous function (M, S, T, B) finish (FIN) signal.

| #3003/bit | Function | Set to "1" | Set to "0" |
|---|---|---|---|
| 0 | Inhibition of single block stop | Inhibits stop. | Does not inhibit stop. |
| 1 | Inhibition of miscellaneous function complete signal waiting | Does not wait for the signal. | Waits for the signal. |
| 2 | Prohibition of program check reverse run | Prohibits reverse run. | Allows reverse run. |
| 3 | Synchronization between part systems OFF | Invalid | Valid |
| 4 | (Not used) | - | - |
| 5 | (Not used) | - | - |
| 6 | (Not used) | - | - |
| 7 | (Not used) | - | - |

**Note**

(1) Variable No. #3003 is set to "0" by reset.

(2) For details on the "Synchronization between part systems" function, refer to "16.8 Synchronization between Part Systems".

### Contents of variable No. "#3004"

By substituting the values below in variable No. #3004, it is possible to make the feed hold, feedrate override and G09 functions either valid or invalid in the subsequent blocks.

| #3004/bit | Function | Set to "1" | Set to "0" |
|---|---|---|---|
| 0 | Automatic operation pause OFF | Invalid | Valid |
| 1 | Cutting override OFF | Invalid | Valid |
| 2 | G09 check OFF | Invalid | Valid |
| 3 | (Not used) | - | - |
| 4 | Dry run invalid | Invalid | Valid |
| 5 | (Not used) | - | - |
| 6 | (Not used) | - | - |
| 7 | (Not used) | - | - |

**Note**

(1) Variable No. #3004 is set to "0" by reset.

(2) The functions are valid when the above bits are "0", and invalid when they are "1".

(3) When the feed hold is set to invalid with #3004, the following will occur when the feed hold switch is pressed.

- During thread cutting, block stop will be carried out at the end of the next block of the block where thread cutting is completed.
- During tapping with tap cycle, block stop will be carried out after the operation of R point return.
- In the case other than above, block stop will be carried out after the termination of the currently executing block.

## 23.17 System Variables (Number of Workpiece Machining Times)

### Detailed description

The number of workpiece machining times can be read using variables #3901 and #3902.
By substituting a value in these variable Nos., the number of workpiece machining times can be changed.

| Variable No. | Type | Data setting range |
|---|---|---|
| #3901 | Number of workpiece machining times | 0 to 999999 |
| #3902 | Maximum workpiece value | |

**Note**

(1) The number of workpiece machining times must be a positive value.

## 23.18 System Variables (Mirror Image)

### Detailed description

By reading variable No. #3007, it is possible to ascertain the status of mirror image of the each axis at the point.
The axis corresponds to each bit of "#3007" as shown below.
0: Mirror image invalid
1: Mirror image valid
The number of axes varies depending on your machine's specifications.

#3007

| Bit | 15 | 14 | 13 | 12 | 11 | 10 | 9 | 8 | 7 | 6 | 5 | 4 | 3 | 2 | 1 | 0 |
|---|---|---|---|---|---|---|---|---|---|---|---|---|---|---|---|---|
| nth axis | | | | | | | | | 8 | 7 | 6 | 5 | 4 | 3 | 2 | 1 |

# 23.19 System Variables (Rotary Axis Configuration Parameter)

**Detailed description**

The following rotary axis configuration parameters can be read by the system variables of the variable command.

By substituting a value in these variables, the setting value of rotary axis configuration parameter can be changed.

| Variable No. | Parameter | |
|---|---|---|
| #31001 | #7903 G92_CRD | Origin zero set coordinate selection |
| #31002 | #7904 NO_TIP | Tool handle feed function selection |
| #31003 | #7920 SLCT_T1 | Rotary axis selection (Base-side rotary axis of tool rotation type) |
| #31004 | #7923 DIR_T1 | Rotation direction (Base-side rotary axis of tool rotation type) |
| #31005 | #7924 COFST1H | Horizontal axis rotation center offset (Base-side rotary axis of tool rotation type) |
| #31006 | #7925 COFST1V | Vertical axis rotation center offset (Base-side rotary axis of tool rotation type) |
| #31007 | #7926 COFST1T | Height axis rotation center offset (Base-side rotary axis of tool rotation type) |
| #31008 | #7930 SLCT_T2 | Rotary axis selection (Tool-side rotary axis of tool rotation type) |
| #31009 | #7933 DIR_T2 | Rotation direction (Tool-side rotary axis of tool rotation type) |
| #31010 | #7934 COFST2H | Horizontal axis rotation center offset (Tool-side rotary axis of tool rotation type) |
| #31011 | #7935 COFST2V | Vertical axis rotation center offset (Tool-side rotary axis of tool rotation type) |
| #31012 | #7936 COFST2T | Height axis rotation center offset (Tool-side rotary axis of tool rotation type) |
| #31013 | #7940 SLCT_W1 | Rotary axis selection (Base-side rotary axis of table rotation type) |
| #31014 | #7943 DIR_ W1 | Rotation direction (Base-side rotary axis of table rotation type) |
| #31015 | #7944 COFSW1H | Horizontal axis rotation center offset (Base-side rotary axis of table rotation type) |
| #31016 | #7945 COFSW1V | Vertical axis rotation center offset (Base-side rotary axis of table rotation type) |
| #31017 | #7946 COFSW1T | Height axis rotation center offset (Base-side rotary axis of table rotation type) |
| #31018 | #7950 SLCT_W2 | Rotary axis selection (Workpiece-side rotary axis of table rotation type) |
| #31019 | #7953 DIR_W2 | Rotation direction (Workpiece-side rotary axis of table rotation type) |
| #31020 | #7954 COFSW2H | Horizontal axis rotation center offset (Workpiece-side rotary axis of table rotation type) |
| #31021 | #7955 COFSW2V | Vertical axis rotation center offset (Workpiece-side rotary axis of table rotation type) |
| #31022 | #7956 COFSW2T | Height axis rotation center offset (Workpiece-side rotary axis of table rotation type) |
| #31023 | #7912 NO_MANUAL | Selection of manual feed for 3-dimensional |

# 23.20 System Variables (Parameter Reading)

## Function and purpose

Parameter data can be read in with the system variables.

| Variable No. | Application |
|---|---|
| #100000 | Parameter No. designation |
| #100001 | Part system No. designation |
| #100002 | Axis No./spindle No. designation |
| #100010 | Parameter value read |

## Detailed description

The parameter values are read in with the following four blocks using these four system variables.

| | |
|---|---|
| #100000 = 1001 ; | Designates the parameter No. |
| #100001 = 1 ; | Designates the part system No. |
| #100002 = 1 ; | Designates the axis No./spindle No. |
| #100 = #100010; | Reads the parameter value. |

### Parameter No. designation (#100000)

The parameter to be read in is designated by substituting the parameter No. in this system variable.
If the parameters are read without designating this No., the parameters will be read in the same manner as if the minimum parameter No. (#1) is designated. Once designated, the setting is held until the parameter No. is designated again or until it is reset.
A program error (P39) will occur if a nonexistent parameter No. is set.

### Part system No. designation (#100001)

(1) System variable for part system No. designation
The part system No. of the parameter to be read in is designated by substituting an index value for this system variable. This designation will be ignored when reading in parameters that are not in a specific part system.
If the parameters are read without designating this No., the parameters will be read in the same manner as if the index value 0 (part system in running program) is designated. Once designated, the setting is held until the part system No. is designated again or until it is reset.
A program error (P39) will occur if a nonexistent part system No. is set.

(2) Index values

| Index values | Parameters per part system |
|---|---|
| 0 | Running part system |
| 1 | 1st part system |
| 2 | 2nd part system |
| 3 | - |
| : | - |
| 9 | - |
| 10 | PLC axis |

### Axis No. /spindle No. designation (#100002)

(1) System variable for axis or spindle No. designation
The axis or spindle No. of the parameter to be read in is designated by substituting an index value for this system variable. This designation will be ignored when reading in parameters that are neither for a specific axis nor spindle.
The axis parameter index value is the value set in the part system designated with #100001.
Thus, when reading parameters that are not in the designated part system, the part system No. must be designated again.
The spindle parameter's index value is not affected by the part system designation.
If the parameters are read without designating this number, the parameters will be read in the same manner as when the index value 1 (1st axis/1st spindle in the designated part system) is designated. Once designated, the setting is held until the index value is designated again or until it is reset.
A program error (P39) will occur if a nonexistent axis/spindle No. is set.

(2) Index values

| Index values | Axis parameter | Spindle parameter |
|---|---|---|
| 1 | 1st axis | 1st spindle |
| 2 | 2nd axis | 2nd spindle |
| 3 | 3rd axis | 3rd spindle |
| 4 | 4th axis | 4th spindle |
| 5 | 5th axis | - |
| 6 | 6th axis | - |

### Reading the parameters (#100010)

The designated parameter data is read with this system variable.
Data to be read as follows, depending on the parameter type.

| Type | Read in data |
|---|---|
| Numeric value | The values displayed on the Parameter screen are output. |
| Text | ASCII codes are converted into decimal values. |

### Program example

(1) To read the parameter "#1002 axisno (number of axes)" for each part system:

```
#100000 = 1002 ;      Designates [#1002].
#100001 = 1 ;         Designates [1st part system].
#101 = #100010;       Reads the number of axes in 1st part system.
#100000 = 1002 ;      Designates [#1002]. (can be omitted since parameter No. is same)
#100001 = 2 ;         Designates [2nd part system].
#102 = #100010;       Reads the number of axes in 2nd part system.
#100001 = 5 ;         Designates [5th part system]. (The program error (P39) will occur.)
#100001 = 10 ;        Designates [PLC axis].
#110 = #100010;       Reads the number of PLC axes.
```

(2) To read the axis parameter "#2037 G53ofs (#1 reference position)":

| [Conditions] | 1 part system | | 2 part systems | |
|---|---|---|---|---|
| | <1st axis> | <2nd axis> | <1st axis> | <2nd axis> |
| #2037 G53ofs | 100.000 | 200.000 | 300.000 | 400.000 |

[1st part system program]

```
#100002 = 1 ;         Designates [1st axis].
#100000 = 2037 ;      Designates [#2037].
#101 = #100010;       Reads the [#1 reference point] for the 1st axis.
                      (#101=100.000)
#100002 = 2 ;         Designates [2nd axis].
#102 = #100010;       Reads the [#2 reference point] for the 1st axis.
                      (#102=200.000)
#100001 = 2 ;         Designates [2nd part system].
#100002 = 1 ;         Designates [1st axis].
#201 = #100010;       Reads the [#2 reference position] for the 1st axis in the 1st part system.
                      (#201=300.000)
```

[2nd part system program]

```
#100002 = 1 ;         Designates [1st axis].
#100000 = 2037 ;      Designates [#2037].
#101 = #100010;       Reads the [#1 reference point] for the 1st axis.
                      (#101=300.000)
#100002 = 2 ;         Designates [2nd axis].
#102 = #100010;       Reads the [#2 reference point] for the 1st axis.
                      (#102=400.000)
#100001 = 1 ;         Designates [1st part system].
#100002 = 1 ;         Designates [1st axis].
#201 = #100010;       Reads the [#1 reference position] for the 1st axis in the 1st part system.
                      (#201=100.000)
```

(3) To read the parameter for each part system, axis, or spindle:

| | |
|---|---|
| #100002 = 1 ; | Designates [1st spindle]. |
| #100000 = 3001 ; | Designates [#3001]. |
| #101 = #100010; | Reads the [#3001 slimt1 (Number of limit rotation gears 00)] for 1st spindle. |
| #100000 = 3002 ; | Designates [#3002]. |
| #102 = #100010; | Reads the [#3002 slimt2 (Number of limit rotation gears 01)] for 1st spindle. |
| #100002 = 2 ; | Designates [2nd spindle]. |
| #100000 = 3001 ; | Designates [#3001]. |
| #201 = #100010 ; | Reads the [#3001 slimt1 (Number of limit rotation gears 00)] for 2nd spindle. |
| #100000 = 3002 ; | Designates [#3002]. |
| #202 = #100010; | Reads the [#3002 slimt2 (Number of limit rotation gears 01)] for 2nd spindle. |

(4) To read the text type parameter "#1169 system name" (part system name):

| [Conditions] | <1st part system> | <2nd part system> |
|---|---|---|
| #1169 system name | SYS1 | SYS2 |

| | |
|---|---|
| #100000 = 1169 ; | Designates #1169. |
| #100001 = 1 ; | Designates 1st part system. |
| #101 = #100010; | This will be #101 = 1398362929 (0x53595331). |

## Precautions

(1) The number of part systems, axes and spindles is set at the maximum number specified by the model.

(2) The inch/metric changeover function for the setting and display is valid for the readout data.

(3) The machining condition parameter group cannot set the parameters from the program using the G10 command, and cannot read the parameters using the system variables ("#100000" and later).

# 23.21 System Variables (Macro Interface Input (PLC -> NC))

## Function and purpose

The status of the interface input signals can be ascertained by reading out the values of variable Nos. #1000 to #1035, #1200 to #1295.

**Note**

- The interface output signals can be sent by substituting values in variable Nos. #1100 to #1135, #1300 to #1395. (For details of the system variables for the output signals, refer to "23.22 System Variables (Macro Interface Output (NC -> PLC))".)

Example of 1st part system

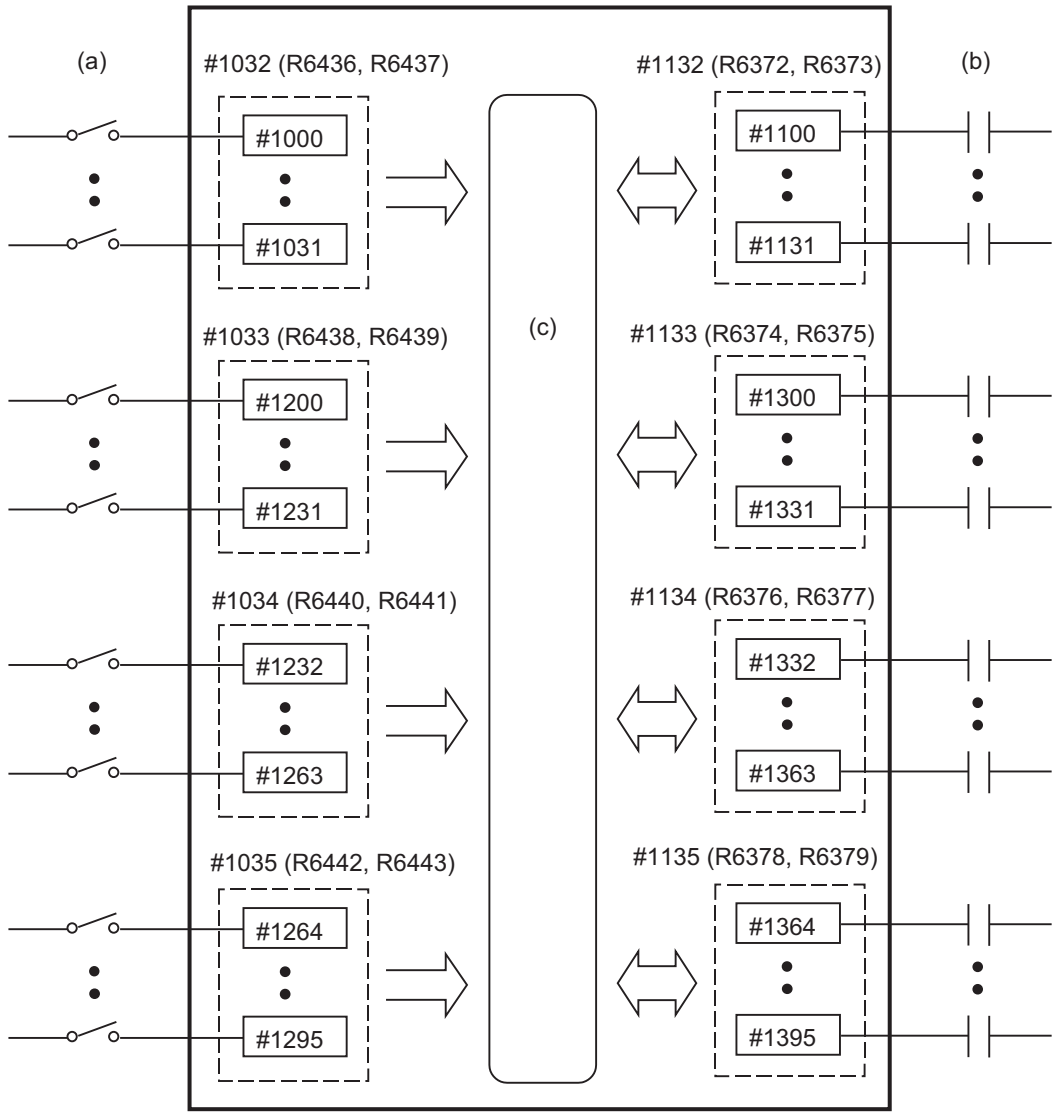


(a) Input signal (b) Output signal (c) Macro instructions

## Detailed description

Variable Nos. #1000 to #1035, #1200 to #1295 are for readout only, and nothing can be placed in the left side member of their operation formula.
Input here refers to input to the NC.
Whether it is per part system or common between part systems depends on the MTB specifications (parameter "#1230 set02/bit07").

### Data unit (32 bits)

All the input signals from #1000 to #1031 can be read at once by reading out the value of variable No. #1032.
The input signals from #1200 to #1231, #1232 to #1263, and #1264 to #1295 can be read by reading out the values of variable Nos. #1033 to #1035.
The data of the 1st part system ($1) to the 8th part system ($8) is as follows.

| System variable | No. of points | Interface input signal | | | | | | | |
|---|---|---|---|---|---|---|---|---|---|
| | | $1 | $2 | $3 | $4 | $5 | $6 | $7 | $8 |
| #1032 | 32 | R6436, R6437 | R6444, R6445 | R6452, R6453 | R6460, R6461 | R6468, R6469 | R6476, R6477 | R6484, R6485 | R6492, R6493 |
| #1033 | 32 | R6438, R6439 | R6446, R6447 | R6454, R6455 | R6462, R6463 | R6470, R6471 | R6478, R6479 | R6486, R6487 | R6494, R6495 |
| #1034 | 32 | R6440, R6441 | R6448, R6449 | R6456, R6457 | R6464, R6465 | R6472, R6473 | R6480, R6481 | R6488, R6489 | R6496, R6497 |
| #1035 | 32 | R6442, R6443 | R6450, R6451 | R6458, R6459 | R6466, R6467 | R6474, R6475 | R6482, R6483 | R6490, R6491 | R6498, R6499 |

### Bit unit

The input signal has only two values: "0" and "1".

| Part system | $1 | $2 | $3 | $4 | $5 | $6 | $7 | $8 |
|---|---|---|---|---|---|---|---|---|
| R device | R6436-R6443 | R6444-R6451 | R6452-R6459 | R6460-R6467 | R6468-R6475 | R6476-R6483 | R6484-R6491 | R6492-R6499 |

If the value is common between part systems, refer to the column of the 1st part system ($1).

| System variable | No. of points | Interface input signal register | | | | | | | |
|---|---|---|---|---|---|---|---|---|---|
| | | $1 | $2 | $3 | $4 | $5 | $6 | $7 | $8 |
| #1000 | 1 | R6436/bit0 | R6444/bit0 | R6452/bit0 | R6460/bit0 | R6468/bit0 | R6476/bit0 | R6484/bit0 | R6492/bit0 |
| #1001 | 1 | bit1 | bit1 | bit1 | bit1 | bit1 | bit1 | bit1 | bit1 |
| #1002 | 1 | bit2 | bit2 | bit2 | bit2 | bit2 | bit2 | bit2 | bit2 |
| #1003 | 1 | bit3 | bit3 | bit3 | bit3 | bit3 | bit3 | bit3 | bit3 |
| #1004 | 1 | bit4 | bit4 | bit4 | bit4 | bit4 | bit4 | bit4 | bit4 |
| #1005 | 1 | bit5 | bit5 | bit5 | bit5 | bit5 | bit5 | bit5 | bit5 |
| #1006 | 1 | bit6 | bit6 | bit6 | bit6 | bit6 | bit6 | bit6 | bit6 |
| #1007 | 1 | bit7 | bit7 | bit7 | bit7 | bit7 | bit7 | bit7 | bit7 |
| #1008 | 1 | bit8 | bit8 | bit8 | bit8 | bit8 | bit8 | bit8 | bit8 |
| #1009 | 1 | bit9 | bit9 | bit9 | bit9 | bit9 | bit9 | bit9 | bit9 |
| #1010 | 1 | bit10 | bit10 | bit10 | bit10 | bit10 | bit10 | bit10 | bit10 |
| #1011 | 1 | bit11 | bit11 | bit11 | bit11 | bit11 | bit11 | bit11 | bit11 |
| #1012 | 1 | bit12 | bit12 | bit12 | bit12 | bit12 | bit12 | bit12 | bit12 |
| #1013 | 1 | bit13 | bit13 | bit13 | bit13 | bit13 | bit13 | bit13 | bit13 |
| #1014 | 1 | bit14 | bit14 | bit14 | bit14 | bit14 | bit14 | bit14 | bit14 |
| #1015 | 1 | bit15 | bit15 | bit15 | bit15 | bit15 | bit15 | bit15 | bit15 |
| #1016 | 1 | R6437/bit0 | R6445/bit0 | R6453/bit0 | R6461/bit0 | R6469/bit0 | R6477/bit0 | R6485/bit0 | R6493/bit0 |
| #1017 | 1 | bit1 | bit1 | bit1 | bit1 | bit1 | bit1 | bit1 | bit1 |
| #1018 | 1 | bit2 | bit2 | bit2 | bit2 | bit2 | bit2 | bit2 | bit2 |
| #1019 | 1 | bit3 | bit3 | bit3 | bit3 | bit3 | bit3 | bit3 | bit3 |
| #1020 | 1 | bit4 | bit4 | bit4 | bit4 | bit4 | bit4 | bit4 | bit4 |
| #1021 | 1 | bit5 | bit5 | bit5 | bit5 | bit5 | bit5 | bit5 | bit5 |
| #1022 | 1 | bit6 | bit6 | bit6 | bit6 | bit6 | bit6 | bit6 | bit6 |
| #1023 | 1 | bit7 | bit7 | bit7 | bit7 | bit7 | bit7 | bit7 | bit7 |
| #1024 | 1 | bit8 | bit8 | bit8 | bit8 | bit8 | bit8 | bit8 | bit8 |
| #1025 | 1 | bit9 | bit9 | bit9 | bit9 | bit9 | bit9 | bit9 | bit9 |
| #1026 | 1 | bit10 | bit10 | bit10 | bit10 | bit10 | bit10 | bit10 | bit10 |
| #1027 | 1 | bit11 | bit11 | bit11 | bit11 | bit11 | bit11 | bit11 | bit11 |
| #1028 | 1 | bit12 | bit12 | bit12 | bit12 | bit12 | bit12 | bit12 | bit12 |
| #1029 | 1 | bit13 | bit13 | bit13 | bit13 | bit13 | bit13 | bit13 | bit13 |
| #1030 | 1 | bit14 | bit14 | bit14 | bit14 | bit14 | bit14 | bit14 | bit14 |
| #1031 | 1 | bit15 | bit15 | bit15 | bit15 | bit15 | bit15 | bit15 | bit15 |

| System variable | No. of points | Interface input signal register | | | | | | | |
|---|---|---|---|---|---|---|---|---|---|
| | | $1 | $2 | $3 | $4 | $5 | $6 | $7 | $8 |
| #1200 | 1 | R6438/ bit0 | R6446/ bit0 | R6454/ bit0 | R6462/ bit0 | R6470/ bit0 | R6478/ bit0 | R6486/ bit0 | R6494/ bit0 |
| #1201 | 1 | bit1 | bit1 | bit1 | bit1 | bit1 | bit1 | bit1 | bit1 |
| #1202 | 1 | bit2 | bit2 | bit2 | bit2 | bit2 | bit2 | bit2 | bit2 |
| #1203 | 1 | bit3 | bit3 | bit3 | bit3 | bit3 | bit3 | bit3 | bit3 |
| #1204 | 1 | bit4 | bit4 | bit4 | bit4 | bit4 | bit4 | bit4 | bit4 |
| #1205 | 1 | bit5 | bit5 | bit5 | bit5 | bit5 | bit5 | bit5 | bit5 |
| #1206 | 1 | bit6 | bit6 | bit6 | bit6 | bit6 | bit6 | bit6 | bit6 |
| #1207 | 1 | bit7 | bit7 | bit7 | bit7 | bit7 | bit7 | bit7 | bit7 |
| #1208 | 1 | bit8 | bit8 | bit8 | bit8 | bit8 | bit8 | bit8 | bit8 |
| #1209 | 1 | bit9 | bit9 | bit9 | bit9 | bit9 | bit9 | bit9 | bit9 |
| #1210 | 1 | bit10 | bit10 | bit10 | bit10 | bit10 | bit10 | bit10 | bit10 |
| #1211 | 1 | bit11 | bit11 | bit11 | bit11 | bit11 | bit11 | bit11 | bit11 |
| #1212 | 1 | bit12 | bit12 | bit12 | bit12 | bit12 | bit12 | bit12 | bit12 |
| #1213 | 1 | bit13 | bit13 | bit13 | bit13 | bit13 | bit13 | bit13 | bit13 |
| #1214 | 1 | bit14 | bit14 | bit14 | bit14 | bit14 | bit14 | bit14 | bit14 |
| #1215 | 1 | bit15 | bit15 | bit15 | bit15 | bit15 | bit15 | bit15 | bit15 |
| #1216 | 1 | R6439/ bit0 | R6447/ bit0 | R6455/ bit0 | R6463/ bit0 | R6471/ bit0 | R6479/ bit0 | R6487/ bit0 | R6495/ bit0 |
| #1217 | 1 | bit1 | bit1 | bit1 | bit1 | bit1 | bit1 | bit1 | bit1 |
| #1218 | 1 | bit2 | bit2 | bit2 | bit2 | bit2 | bit2 | bit2 | bit2 |
| #1219 | 1 | bit3 | bit3 | bit3 | bit3 | bit3 | bit3 | bit3 | bit3 |
| #1220 | 1 | bit4 | bit4 | bit4 | bit4 | bit4 | bit4 | bit4 | bit4 |
| #1221 | 1 | bit5 | bit5 | bit5 | bit5 | bit5 | bit5 | bit5 | bit5 |
| #1222 | 1 | bit6 | bit6 | bit6 | bit6 | bit6 | bit6 | bit6 | bit6 |
| #1223 | 1 | bit7 | bit7 | bit7 | bit7 | bit7 | bit7 | bit7 | bit7 |
| #1224 | 1 | bit8 | bit8 | bit8 | bit8 | bit8 | bit8 | bit8 | bit8 |
| #1225 | 1 | bit9 | bit9 | bit9 | bit9 | bit9 | bit9 | bit9 | bit9 |
| #1226 | 1 | bit10 | bit10 | bit10 | bit10 | bit10 | bit10 | bit10 | bit10 |
| #1227 | 1 | bit11 | bit11 | bit11 | bit11 | bit11 | bit11 | bit11 | bit11 |
| #1228 | 1 | bit12 | bit12 | bit12 | bit12 | bit12 | bit12 | bit12 | bit12 |
| #1229 | 1 | bit13 | bit13 | bit13 | bit13 | bit13 | bit13 | bit13 | bit13 |
| #1230 | 1 | bit14 | bit14 | bit14 | bit14 | bit14 | bit14 | bit14 | bit14 |
| #1231 | 1 | bit15 | bit15 | bit15 | bit15 | bit15 | bit15 | bit15 | bit15 |

| System variable | No. of points | Interface input signal register | | | | | | | |
|---|---|---|---|---|---|---|---|---|---|
| | | $1 | $2 | $3 | $4 | $5 | $6 | $7 | $8 |
| #1232 | 1 | R6440/ bit0 | R6448/ bit0 | R6456/ bit0 | R6464/ bit0 | R6472/ bit0 | R6480/ bit0 | R6488/ bit0 | R6496/ bit0 |
| #1233 | 1 | bit1 | bit1 | bit1 | bit1 | bit1 | bit1 | bit1 | bit1 |
| #1234 | 1 | bit2 | bit2 | bit2 | bit2 | bit2 | bit2 | bit2 | bit2 |
| #1235 | 1 | bit3 | bit3 | bit3 | bit3 | bit3 | bit3 | bit3 | bit3 |
| #1236 | 1 | bit4 | bit4 | bit4 | bit4 | bit4 | bit4 | bit4 | bit4 |
| #1237 | 1 | bit5 | bit5 | bit5 | bit5 | bit5 | bit5 | bit5 | bit5 |
| #1238 | 1 | bit6 | bit6 | bit6 | bit6 | bit6 | bit6 | bit6 | bit6 |
| #1239 | 1 | bit7 | bit7 | bit7 | bit7 | bit7 | bit7 | bit7 | bit7 |
| #1240 | 1 | bit8 | bit8 | bit8 | bit8 | bit8 | bit8 | bit8 | bit8 |
| #1241 | 1 | bit9 | bit9 | bit9 | bit9 | bit9 | bit9 | bit9 | bit9 |
| #1242 | 1 | bit10 | bit10 | bit10 | bit10 | bit10 | bit10 | bit10 | bit10 |
| #1243 | 1 | bit11 | bit11 | bit11 | bit11 | bit11 | bit11 | bit11 | bit11 |
| #1244 | 1 | bit12 | bit12 | bit12 | bit12 | bit12 | bit12 | bit12 | bit12 |
| #1245 | 1 | bit13 | bit13 | bit13 | bit13 | bit13 | bit13 | bit13 | bit13 |
| #1246 | 1 | bit14 | bit14 | bit14 | bit14 | bit14 | bit14 | bit14 | bit14 |
| #1247 | 1 | bit15 | bit15 | bit15 | bit15 | bit15 | bit15 | bit15 | bit15 |
| #1248 | 1 | R6441/ bit0 | R6449/ bit0 | R6457/ bit0 | R6465/ bit0 | R6473/ bit0 | R6481/ bit0 | R6489/ bit0 | R6497/ bit0 |
| #1249 | 1 | bit1 | bit1 | bit1 | bit1 | bit1 | bit1 | bit1 | bit1 |
| #1250 | 1 | bit2 | bit2 | bit2 | bit2 | bit2 | bit2 | bit2 | bit2 |
| #1251 | 1 | bit3 | bit3 | bit3 | bit3 | bit3 | bit3 | bit3 | bit3 |
| #1252 | 1 | bit4 | bit4 | bit4 | bit4 | bit4 | bit4 | bit4 | bit4 |
| #1253 | 1 | bit5 | bit5 | bit5 | bit5 | bit5 | bit5 | bit5 | bit5 |
| #1254 | 1 | bit6 | bit6 | bit6 | bit6 | bit6 | bit6 | bit6 | bit6 |
| #1255 | 1 | bit7 | bit7 | bit7 | bit7 | bit7 | bit7 | bit7 | bit7 |
| #1256 | 1 | bit8 | bit8 | bit8 | bit8 | bit8 | bit8 | bit8 | bit8 |
| #1257 | 1 | bit9 | bit9 | bit9 | bit9 | bit9 | bit9 | bit9 | bit9 |
| #1258 | 1 | bit10 | bit10 | bit10 | bit10 | bit10 | bit10 | bit10 | bit10 |
| #1259 | 1 | bit11 | bit11 | bit11 | bit11 | bit11 | bit11 | bit11 | bit11 |
| #1260 | 1 | bit12 | bit12 | bit12 | bit12 | bit12 | bit12 | bit12 | bit12 |
| #1261 | 1 | bit13 | bit13 | bit13 | bit13 | bit13 | bit13 | bit13 | bit13 |
| #1262 | 1 | bit14 | bit14 | bit14 | bit14 | bit14 | bit14 | bit14 | bit14 |
| #1263 | 1 | bit15 | bit15 | bit15 | bit15 | bit15 | bit15 | bit15 | bit15 |

| System variable | No. of points | Interface input signal register | | | | | | | |
|---|---|---|---|---|---|---|---|---|---|
| | | $1 | $2 | $3 | $4 | $5 | $6 | $7 | $8 |
| #1264 | 1 | R6442/ bit0 | R6450/ bit0 | R6458/ bit0 | R6466/ bit0 | R6474/ bit0 | R6482/ bit0 | R6490/ bit0 | R6498/ bit0 |
| #1265 | 1 | bit1 | bit1 | bit1 | bit1 | bit1 | bit1 | bit1 | bit1 |
| #1266 | 1 | bit2 | bit2 | bit2 | bit2 | bit2 | bit2 | bit2 | bit2 |
| #1267 | 1 | bit3 | bit3 | bit3 | bit3 | bit3 | bit3 | bit3 | bit3 |
| #1268 | 1 | bit4 | bit4 | bit4 | bit4 | bit4 | bit4 | bit4 | bit4 |
| #1269 | 1 | bit5 | bit5 | bit5 | bit5 | bit5 | bit5 | bit5 | bit5 |
| #1270 | 1 | bit6 | bit6 | bit6 | bit6 | bit6 | bit6 | bit6 | bit6 |
| #1271 | 1 | bit7 | bit7 | bit7 | bit7 | bit7 | bit7 | bit7 | bit7 |
| #1272 | 1 | bit8 | bit8 | bit8 | bit8 | bit8 | bit8 | bit8 | bit8 |
| #1273 | 1 | bit9 | bit9 | bit9 | bit9 | bit9 | bit9 | bit9 | bit9 |
| #1274 | 1 | bit10 | bit10 | bit10 | bit10 | bit10 | bit10 | bit10 | bit10 |
| #1275 | 1 | bit11 | bit11 | bit11 | bit11 | bit11 | bit11 | bit11 | bit11 |
| #1276 | 1 | bit12 | bit12 | bit12 | bit12 | bit12 | bit12 | bit12 | bit12 |
| #1277 | 1 | bit13 | bit13 | bit13 | bit13 | bit13 | bit13 | bit13 | bit13 |
| #1278 | 1 | bit14 | bit14 | bit14 | bit14 | bit14 | bit14 | bit14 | bit14 |
| #1279 | 1 | bit15 | bit15 | bit15 | bit15 | bit15 | bit15 | bit15 | bit15 |
| #1280 | 1 | R6443/ bit0 | R6451/ bit0 | R6459/ bit0 | R6467/ bit0 | R6475/ bit0 | R6483/ bit0 | R6491/ bit0 | R6499/ bit0 |
| #1281 | 1 | bit1 | bit1 | bit1 | bit1 | bit1 | bit1 | bit1 | bit1 |
| #1282 | 1 | bit2 | bit2 | bit2 | bit2 | bit2 | bit2 | bit2 | bit2 |
| #1283 | 1 | bit3 | bit3 | bit3 | bit3 | bit3 | bit3 | bit3 | bit3 |
| #1284 | 1 | bit4 | bit4 | bit4 | bit4 | bit4 | bit4 | bit4 | bit4 |
| #1285 | 1 | bit5 | bit5 | bit5 | bit5 | bit5 | bit5 | bit5 | bit5 |
| #1286 | 1 | bit6 | bit6 | bit6 | bit6 | bit6 | bit6 | bit6 | bit6 |
| #1287 | 1 | bit7 | bit7 | bit7 | bit7 | bit7 | bit7 | bit7 | bit7 |
| #1288 | 1 | bit8 | bit8 | bit8 | bit8 | bit8 | bit8 | bit8 | bit8 |
| #1289 | 1 | bit9 | bit9 | bit9 | bit9 | bit9 | bit9 | bit9 | bit9 |
| #1290 | 1 | bit10 | bit10 | bit10 | bit10 | bit10 | bit10 | bit10 | bit10 |
| #1291 | 1 | bit11 | bit11 | bit11 | bit11 | bit11 | bit11 | bit11 | bit11 |
| #1292 | 1 | bit12 | bit12 | bit12 | bit12 | bit12 | bit12 | bit12 | bit12 |
| #1293 | 1 | bit13 | bit13 | bit13 | bit13 | bit13 | bit13 | bit13 | bit13 |
| #1294 | 1 | bit14 | bit14 | bit14 | bit14 | bit14 | bit14 | bit14 | bit14 |
| #1295 | 1 | bit15 | bit15 | bit15 | bit15 | bit15 | bit15 | bit15 | bit15 |

# 23.22 System Variables (Macro Interface Output (NC -> PLC))

## Function and purpose

The interface output signals can be sent by substituting values in variable Nos. #1100 to #1135, #1300 to #1395.

**Note**

- The status of the interface input signals can be ascertained by reading out the values of variable Nos. #1000 to #1035, #1200 to #1295. (For details of the system variables for the output signals, refer to "23.21 System Variables (Macro Interface Input (PLC -> NC))".)

Example of 1st part system

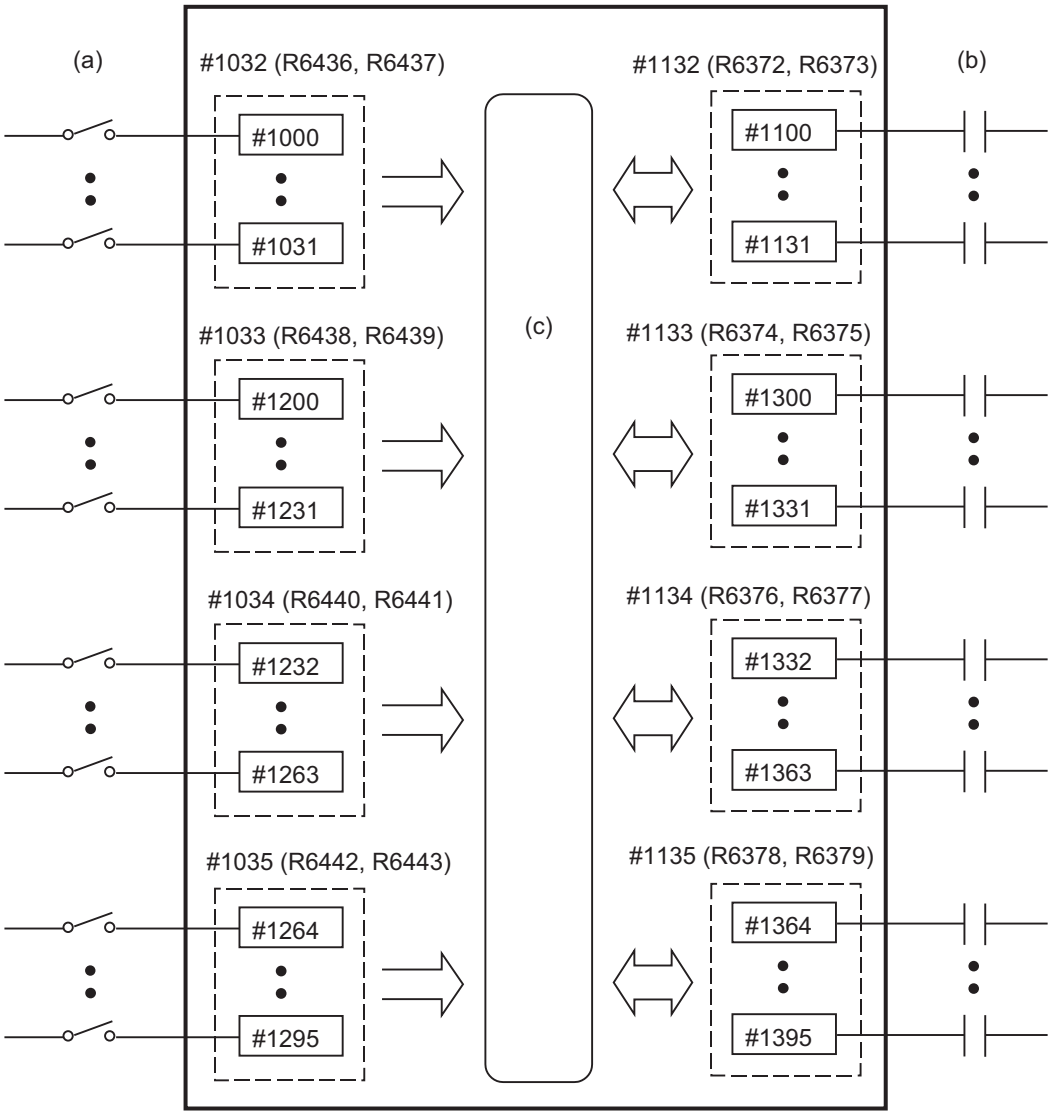


(a) Input signal (b) Output signal (c) Macro instructions

## Detailed description

The status of the writing and output signals can be read in order to compensate the #1100 to #1135, #1300 to #1395 output signals.
Output here refers to the output from the NC side.
Whether it is per part system or common between part systems depends on the MTB specifications (parameter "#1230 set02/bit07").

### Note

(1) The last values of the system variables #1100 to #1135, #1300 to #1395 sent are retained as 1 or 0. (They are not cleared even by resetting.)

(2) The following applies when any number except 1 or 0 is substituted into #1100 to #1131, #1300 to #1395.
<Blank> is treated as 0. All values other than <blank> or "0" are treated as 1.
Any value less than 0.00000001 is indefinite.

### Data unit (32 bits)

All the output Nos. from #1100 to #1131 can be sent at once by substituting a value in variable No. #1132.
The output signals from #1300 to #1331, #1332 to #1363, and #1364 to #1395 can be sent by substituting a value in variable Nos. #1133 to #1135. ($2^0$ to $2^{31}$)
The data of the 1st part system ($1) to the 8th part system ($8) is as follows.

| System variable | No. of points | Interface output signal | | | | | | | |
|---|---|---|---|---|---|---|---|---|---|
| | | $1 | $2 | $3 | $4 | $5 | $6 | $7 | $8 |
| #1132 | 32 | R6372, R6373 | R6380, R6381 | R6388, R6389 | R6396, R6397 | R6404, R6405 | R6412, R6413 | R6420, R6421 | R6428, R6429 |
| #1133 | 32 | R6374, R6375 | R6382, R6383 | R6390, R6391 | R6398, R6399 | R6406, R6407 | R6414, R6415 | R6422, R6423 | R6430, R6431 |
| #1134 | 32 | R6376, R6377 | R6384, R6385 | R6392, R6393 | R6400, R6401 | R6408, R6409 | R6416, R6417 | R6424, R6425 | R6432, R6433 |
| #1135 | 32 | R6378, R6379 | R6386, R6387 | R6394, R6395 | R6402, R6403 | R6410, R6411 | R6418, R6419 | R6426, R6427 | R6434, R6435 |

### Bit unit

The output signal has only two values: "0" and "1".

| Part system | $1 | $2 | $3 | $4 | $5 | $6 | $7 | $8 |
|---|---|---|---|---|---|---|---|---|
| R device | R6372-R6379 | R6380-R6387 | R6388-R6395 | R6396-R6403 | R6404-R6411 | R6412-R6419 | R6420-R6427 | R6428-R6435 |

If the value is common between part systems, refer to the column of the 1st part system ($1).

| System variable | No. of points | Interface output signal register | | | | | | | |
|---|---|---|---|---|---|---|---|---|---|
| | | $1 | $2 | $3 | $4 | $5 | $6 | $7 | $8 |
| #1100 | 1 | R6372/bit0 | R6380/bit0 | R6388/bit0 | R6396/bit0 | R6404/bit0 | R6412/bit0 | R6420/bit0 | R6428/bit0 |
| #1101 | 1 | bit1 | bit1 | bit1 | bit1 | bit1 | bit1 | bit1 | bit1 |
| #1102 | 1 | bit2 | bit2 | bit2 | bit2 | bit2 | bit2 | bit2 | bit2 |
| #1103 | 1 | bit3 | bit3 | bit3 | bit3 | bit3 | bit3 | bit3 | bit3 |
| #1104 | 1 | bit4 | bit4 | bit4 | bit4 | bit4 | bit4 | bit4 | bit4 |
| #1105 | 1 | bit5 | bit5 | bit5 | bit5 | bit5 | bit5 | bit5 | bit5 |
| #1106 | 1 | bit6 | bit6 | bit6 | bit6 | bit6 | bit6 | bit6 | bit6 |
| #1107 | 1 | bit7 | bit7 | bit7 | bit7 | bit7 | bit7 | bit7 | bit7 |
| #1108 | 1 | bit8 | bit8 | bit8 | bit8 | bit8 | bit8 | bit8 | bit8 |
| #1109 | 1 | bit9 | bit9 | bit9 | bit9 | bit9 | bit9 | bit9 | bit9 |
| #1110 | 1 | bit10 | bit10 | bit10 | bit10 | bit10 | bit10 | bit10 | bit10 |
| #1111 | 1 | bit11 | bit11 | bit11 | bit11 | bit11 | bit11 | bit11 | bit11 |
| #1112 | 1 | bit12 | bit12 | bit12 | bit12 | bit12 | bit12 | bit12 | bit12 |
| #1113 | 1 | bit13 | bit13 | bit13 | bit13 | bit13 | bit13 | bit13 | bit13 |
| #1114 | 1 | bit14 | bit14 | bit14 | bit14 | bit14 | bit14 | bit14 | bit14 |
| #1115 | 1 | bit15 | bit15 | bit15 | bit15 | bit15 | bit15 | bit15 | bit15 |
| #1116 | 1 | R6373/bit0 | R6381/bit0 | R6389/bit0 | R6397/bit0 | R6405/bit0 | R6413/bit0 | R6421/bit0 | R6429/bit0 |
| #1117 | 1 | bit1 | bit1 | bit1 | bit1 | bit1 | bit1 | bit1 | bit1 |
| #1118 | 1 | bit2 | bit2 | bit2 | bit2 | bit2 | bit2 | bit2 | bit2 |
| #1119 | 1 | bit3 | bit3 | bit3 | bit3 | bit3 | bit3 | bit3 | bit3 |
| #1120 | 1 | bit4 | bit4 | bit4 | bit4 | bit4 | bit4 | bit4 | bit4 |
| #1121 | 1 | bit5 | bit5 | bit5 | bit5 | bit5 | bit5 | bit5 | bit5 |
| #1122 | 1 | bit6 | bit6 | bit6 | bit6 | bit6 | bit6 | bit6 | bit6 |
| #1123 | 1 | bit7 | bit7 | bit7 | bit7 | bit7 | bit7 | bit7 | bit7 |
| #1124 | 1 | bit8 | bit8 | bit8 | bit8 | bit8 | bit8 | bit8 | bit8 |
| #1125 | 1 | bit9 | bit9 | bit9 | bit9 | bit9 | bit9 | bit9 | bit9 |
| #1126 | 1 | bit10 | bit10 | bit10 | bit10 | bit10 | bit10 | bit10 | bit10 |
| #1127 | 1 | bit11 | bit11 | bit11 | bit11 | bit11 | bit11 | bit11 | bit11 |
| #1128 | 1 | bit12 | bit12 | bit12 | bit12 | bit12 | bit12 | bit12 | bit12 |
| #1129 | 1 | bit13 | bit13 | bit13 | bit13 | bit13 | bit13 | bit13 | bit13 |
| #1130 | 1 | bit14 | bit14 | bit14 | bit14 | bit14 | bit14 | bit14 | bit14 |
| #1131 | 1 | bit15 | bit15 | bit15 | bit15 | bit15 | bit15 | bit15 | bit15 |

| System variable | No. of points | Interface output signal register | | | | | | | |
|---|---|---|---|---|---|---|---|---|---|
| | | $1 | $2 | $3 | $4 | $5 | $6 | $7 | $8 |
| #1300 | 1 | R6374/ bit0 | R6382/ bit0 | R6390/ bit0 | R6398/ bit0 | R6406/ bit0 | R6414/ bit0 | R6422/ bit0 | R6430/ bit0 |
| #1301 | 1 | bit1 | bit1 | bit1 | bit1 | bit1 | bit1 | bit1 | bit1 |
| #1302 | 1 | bit2 | bit2 | bit2 | bit2 | bit2 | bit2 | bit2 | bit2 |
| #1303 | 1 | bit3 | bit3 | bit3 | bit3 | bit3 | bit3 | bit3 | bit3 |
| #1304 | 1 | bit4 | bit4 | bit4 | bit4 | bit4 | bit4 | bit4 | bit4 |
| #1305 | 1 | bit5 | bit5 | bit5 | bit5 | bit5 | bit5 | bit5 | bit5 |
| #1306 | 1 | bit6 | bit6 | bit6 | bit6 | bit6 | bit6 | bit6 | bit6 |
| #1307 | 1 | bit7 | bit7 | bit7 | bit7 | bit7 | bit7 | bit7 | bit7 |
| #1308 | 1 | bit8 | bit8 | bit8 | bit8 | bit8 | bit8 | bit8 | bit8 |
| #1309 | 1 | bit9 | bit9 | bit9 | bit9 | bit9 | bit9 | bit9 | bit9 |
| #1310 | 1 | bit10 | bit10 | bit10 | bit10 | bit10 | bit10 | bit10 | bit10 |
| #1311 | 1 | bit11 | bit11 | bit11 | bit11 | bit11 | bit11 | bit11 | bit11 |
| #1312 | 1 | bit12 | bit12 | bit12 | bit12 | bit12 | bit12 | bit12 | bit12 |
| #1313 | 1 | bit13 | bit13 | bit13 | bit13 | bit13 | bit13 | bit13 | bit13 |
| #1314 | 1 | bit14 | bit14 | bit14 | bit14 | bit14 | bit14 | bit14 | bit14 |
| #1315 | 1 | bit15 | bit15 | bit15 | bit15 | bit15 | bit15 | bit15 | bit15 |
| #1316 | 1 | R6375/ bit0 | R6383/ bit0 | R6391/ bit0 | R6399/ bit0 | R6407/ bit0 | R6415/ bit0 | R6423/ bit0 | R6431/ bit0 |
| #1317 | 1 | bit1 | bit1 | bit1 | bit1 | bit1 | bit1 | bit1 | bit1 |
| #1318 | 1 | bit2 | bit2 | bit2 | bit2 | bit2 | bit2 | bit2 | bit2 |
| #1319 | 1 | bit3 | bit3 | bit3 | bit3 | bit3 | bit3 | bit3 | bit3 |
| #1320 | 1 | bit4 | bit4 | bit4 | bit4 | bit4 | bit4 | bit4 | bit4 |
| #1321 | 1 | bit5 | bit5 | bit5 | bit5 | bit5 | bit5 | bit5 | bit5 |
| #1322 | 1 | bit6 | bit6 | bit6 | bit6 | bit6 | bit6 | bit6 | bit6 |
| #1323 | 1 | bit7 | bit7 | bit7 | bit7 | bit7 | bit7 | bit7 | bit7 |
| #1324 | 1 | bit8 | bit8 | bit8 | bit8 | bit8 | bit8 | bit8 | bit8 |
| #1325 | 1 | bit9 | bit9 | bit9 | bit9 | bit9 | bit9 | bit9 | bit9 |
| #1326 | 1 | bit10 | bit10 | bit10 | bit10 | bit10 | bit10 | bit10 | bit10 |
| #1327 | 1 | bit11 | bit11 | bit11 | bit11 | bit11 | bit11 | bit11 | bit11 |
| #1328 | 1 | bit12 | bit12 | bit12 | bit12 | bit12 | bit12 | bit12 | bit12 |
| #1329 | 1 | bit13 | bit13 | bit13 | bit13 | bit13 | bit13 | bit13 | bit13 |
| #1330 | 1 | bit14 | bit14 | bit14 | bit14 | bit14 | bit14 | bit14 | bit14 |
| #1331 | 1 | bit15 | bit15 | bit15 | bit15 | bit15 | bit15 | bit15 | bit15 |

| System variable | No. of points | Interface output signal register | | | | | | | |
|---|---|---|---|---|---|---|---|---|---|
| | | $1 | $2 | $3 | $4 | $5 | $6 | $7 | $8 |
| #1332 | 1 | R6376/ bit0 | R6384/ bit0 | R6392/ bit0 | R6400/ bit0 | R6408/ bit0 | R6416/ bit0 | R6424/ bit0 | R6432/ bit0 |
| #1333 | 1 | bit1 | bit1 | bit1 | bit1 | bit1 | bit1 | bit1 | bit1 |
| #1334 | 1 | bit2 | bit2 | bit2 | bit2 | bit2 | bit2 | bit2 | bit2 |
| #1335 | 1 | bit3 | bit3 | bit3 | bit3 | bit3 | bit3 | bit3 | bit3 |
| #1336 | 1 | bit4 | bit4 | bit4 | bit4 | bit4 | bit4 | bit4 | bit4 |
| #1337 | 1 | bit5 | bit5 | bit5 | bit5 | bit5 | bit5 | bit5 | bit5 |
| #1338 | 1 | bit6 | bit6 | bit6 | bit6 | bit6 | bit6 | bit6 | bit6 |
| #1339 | 1 | bit7 | bit7 | bit7 | bit7 | bit7 | bit7 | bit7 | bit7 |
| #1340 | 1 | bit8 | bit8 | bit8 | bit8 | bit8 | bit8 | bit8 | bit8 |
| #1341 | 1 | bit9 | bit9 | bit9 | bit9 | bit9 | bit9 | bit9 | bit9 |
| #1342 | 1 | bit10 | bit10 | bit10 | bit10 | bit10 | bit10 | bit10 | bit10 |
| #1343 | 1 | bit11 | bit11 | bit11 | bit11 | bit11 | bit11 | bit11 | bit11 |
| #1344 | 1 | bit12 | bit12 | bit12 | bit12 | bit12 | bit12 | bit12 | bit12 |
| #1345 | 1 | bit13 | bit13 | bit13 | bit13 | bit13 | bit13 | bit13 | bit13 |
| #1346 | 1 | bit14 | bit14 | bit14 | bit14 | bit14 | bit14 | bit14 | bit14 |
| #1347 | 1 | bit15 | bit15 | bit15 | bit15 | bit15 | bit15 | bit15 | bit15 |
| #1348 | 1 | R6377/ bit0 | R6385/ bit0 | R6393/ bit0 | R6401/ bit0 | R6409/ bit0 | R6417/ bit0 | R6425/ bit0 | R6433/ bit0 |
| #1349 | 1 | bit1 | bit1 | bit1 | bit1 | bit1 | bit1 | bit1 | bit1 |
| #1350 | 1 | bit2 | bit2 | bit2 | bit2 | bit2 | bit2 | bit2 | bit2 |
| #1351 | 1 | bit3 | bit3 | bit3 | bit3 | bit3 | bit3 | bit3 | bit3 |
| #1352 | 1 | bit4 | bit4 | bit4 | bit4 | bit4 | bit4 | bit4 | bit4 |
| #1353 | 1 | bit5 | bit5 | bit5 | bit5 | bit5 | bit5 | bit5 | bit5 |
| #1354 | 1 | bit6 | bit6 | bit6 | bit6 | bit6 | bit6 | bit6 | bit6 |
| #1355 | 1 | bit7 | bit7 | bit7 | bit7 | bit7 | bit7 | bit7 | bit7 |
| #1356 | 1 | bit8 | bit8 | bit8 | bit8 | bit8 | bit8 | bit8 | bit8 |
| #1357 | 1 | bit9 | bit9 | bit9 | bit9 | bit9 | bit9 | bit9 | bit9 |
| #1358 | 1 | bit10 | bit10 | bit10 | bit10 | bit10 | bit10 | bit10 | bit10 |
| #1359 | 1 | bit11 | bit11 | bit11 | bit11 | bit11 | bit11 | bit11 | bit11 |
| #1360 | 1 | bit12 | bit12 | bit12 | bit12 | bit12 | bit12 | bit12 | bit12 |
| #1361 | 1 | bit13 | bit13 | bit13 | bit13 | bit13 | bit13 | bit13 | bit13 |
| #1362 | 1 | bit14 | bit14 | bit14 | bit14 | bit14 | bit14 | bit14 | bit14 |
| #1363 | 1 | bit15 | bit15 | bit15 | bit15 | bit15 | bit15 | bit15 | bit15 |

| System variable | No. of points | Interface output signal register | | | | | | | |
|---|---|---|---|---|---|---|---|---|---|
| | | $1 | $2 | $3 | $4 | $5 | $6 | $7 | $8 |
| #1364 | 1 | R6378/ bit0 | R6386/ bit0 | R6394/ bit0 | R6402/ bit0 | R6410/ bit0 | R6418/ bit0 | R6426/ bit0 | R6434/ bit0 |
| #1365 | 1 | bit1 | bit1 | bit1 | bit1 | bit1 | bit1 | bit1 | bit1 |
| #1366 | 1 | bit2 | bit2 | bit2 | bit2 | bit2 | bit2 | bit2 | bit2 |
| #1367 | 1 | bit3 | bit3 | bit3 | bit3 | bit3 | bit3 | bit3 | bit3 |
| #1368 | 1 | bit4 | bit4 | bit4 | bit4 | bit4 | bit4 | bit4 | bit4 |
| #1369 | 1 | bit5 | bit5 | bit5 | bit5 | bit5 | bit5 | bit5 | bit5 |
| #1370 | 1 | bit6 | bit6 | bit6 | bit6 | bit6 | bit6 | bit6 | bit6 |
| #1371 | 1 | bit7 | bit7 | bit7 | bit7 | bit7 | bit7 | bit7 | bit7 |
| #1372 | 1 | bit8 | bit8 | bit8 | bit8 | bit8 | bit8 | bit8 | bit8 |
| #1373 | 1 | bit9 | bit9 | bit9 | bit9 | bit9 | bit9 | bit9 | bit9 |
| #1374 | 1 | bit10 | bit10 | bit10 | bit10 | bit10 | bit10 | bit10 | bit10 |
| #1375 | 1 | bit11 | bit11 | bit11 | bit11 | bit11 | bit11 | bit11 | bit11 |
| #1376 | 1 | bit12 | bit12 | bit12 | bit12 | bit12 | bit12 | bit12 | bit12 |
| #1377 | 1 | bit13 | bit13 | bit13 | bit13 | bit13 | bit13 | bit13 | bit13 |
| #1378 | 1 | bit14 | bit14 | bit14 | bit14 | bit14 | bit14 | bit14 | bit14 |
| #1379 | 1 | bit15 | bit15 | bit15 | bit15 | bit15 | bit15 | bit15 | bit15 |
| #1380 | 1 | R6379/ bit0 | R6387/ bit0 | R6395/ bit0 | R6403/ bit0 | R6411/ bit0 | R6419/ bit0 | R6427/ bit0 | R6435/ bit0 |
| #1381 | 1 | bit1 | bit1 | bit1 | bit1 | bit1 | bit1 | bit1 | bit1 |
| #1382 | 1 | bit2 | bit2 | bit2 | bit2 | bit2 | bit2 | bit2 | bit2 |
| #1383 | 1 | bit3 | bit3 | bit3 | bit3 | bit3 | bit3 | bit3 | bit3 |
| #1384 | 1 | bit4 | bit4 | bit4 | bit4 | bit4 | bit4 | bit4 | bit4 |
| #1385 | 1 | bit5 | bit5 | bit5 | bit5 | bit5 | bit5 | bit5 | bit5 |
| #1386 | 1 | bit6 | bit6 | bit6 | bit6 | bit6 | bit6 | bit6 | bit6 |
| #1387 | 1 | bit7 | bit7 | bit7 | bit7 | bit7 | bit7 | bit7 | bit7 |
| #1388 | 1 | bit8 | bit8 | bit8 | bit8 | bit8 | bit8 | bit8 | bit8 |
| #1389 | 1 | bit9 | bit9 | bit9 | bit9 | bit9 | bit9 | bit9 | bit9 |
| #1390 | 1 | bit10 | bit10 | bit10 | bit10 | bit10 | bit10 | bit10 | bit10 |
| #1391 | 1 | bit11 | bit11 | bit11 | bit11 | bit11 | bit11 | bit11 | bit11 |
| #1392 | 1 | bit12 | bit12 | bit12 | bit12 | bit12 | bit12 | bit12 | bit12 |
| #1393 | 1 | bit13 | bit13 | bit13 | bit13 | bit13 | bit13 | bit13 | bit13 |
| #1394 | 1 | bit14 | bit14 | bit14 | bit14 | bit14 | bit14 | bit14 | bit14 |
| #1395 | 1 | bit15 | bit15 | bit15 | bit15 | bit15 | bit15 | bit15 | bit15 |

# 23.23 System Variables (R Device Access Variables)

## Function and purpose

By using variable Nos. #50000 to #50749, #51000 to #51749, #52000 to #52749, it is possible to read data (R8300 to R9799, R18300 to R19799, R28300 to R29799) and substitute value in the R device user backup area.

| Variable No. | R device | |
|---|---|---|
| **#50000** | R8300, R8301 | User backup area (1500 points) |
| **#50001** | R8302, R8303 | |
| **:** | | |
| **#50749** | R9798, R9799 | |

| Variable No. | R device | |
|---|---|---|
| **#51000** | R18300, R18301 | User backup area (1500 points) |
| **#51001** | R18302, R18303 | |
| **:** | | |
| **#51749** | R19798, R19799 | |

| Variable No. | R device | |
|---|---|---|
| **#52000** | R28300, R28301 | User backup area (1500 points) |
| **#52001** | R28302, R28303 | |
| **:** | | |
| **#52749** | R29798, R29799 | |

## Detailed description

These variables read and write the two words of R device.
Data range of these variables is -2147483648 to 2147483647.
Depending on the setting of the PLC bit selection parameter "#6455" (bit0 to bit2), these variables can be changed between decimal point valid or invalid for each user backup area.
The position of the decimal point when decimal point valid is selected, varies according to the parameters "#1003 iunit" (inupt setting unit) and "#1041 I_inch" (initial inch). (This depends on the MTB specifications.)

| #1041 I_inch | #1003 iunit | | | |
|---|---|---|---|---|
| | **B** | **C** | **D** | **E** |
| 0: Metric | Three digits after the decimal point | Four digits after the decimal point | Five digits after the decimal point | Six digits after the decimal point |
| 1: Inch | Four digits after the decimal point | Five digits after the decimal point | Six digits after the decimal point | Seven digits after the decimal point |

These variables are retained even when the power is off.
These are common among part systems.

## Access from a machining program to R device

**[Reading variables]**

When the variable #50000 is used in a machining program as shown below, the data set in device R8300 and R8301 will be referred.

| | Device | Value | #50000 |
|---|---|---|---|
| G0 X#50000 ;<br>↑<br>R8300,R8301 | R8301 | 0x0001 | 0x1e240 (Hex.)<br>= 123456 (Decimal) |
| | R8300 | 0xe240 | |

(1) When decimal point invalid is selected:

Regardless of the setting of the parameter "#1003 iunit" (input setting unit) and "#1041 I_inch" (initial inch), the data set in the R device will be the command value.
In case of the above example, the command value will be "X123456.".

(2) When decimal point valid is selected:

The data set in the R device will be read as a data with a decimal point.
The position of the decimal point will be as follows, according to the settings of the parameters "#1003 iunit" (inupt setting unit) and "#1041 I_inch" (initial inch).

| #1041 I_inch | #1003 iunit | | | |
|---|---|---|---|---|
| | B | C | D | E |
| 0: Metric | X123.456 | X12.3456 | X1.23456 | X0.123456 |
| 1: Inch | X12.3456 | X1.23456 | X0.123456 | X0.0123456 |

**[Substitution into variables]**

When substituting a value to the variable #50001 in a machining program as shown below, data will be set in the device R8302 and R8303.

#50001 = 123 ;
→ R8302,R8303

(1) When decimal point invalid is selected:

Regardless of the setting of the parameter "#1003 iunit" (inupt setting unit) and "#1041 I_inch" (initial inch), substituted value will be set in the R device.

| #50001 | Device | Value |
|---|---|---|
| 123 (Decimal)<br>= 0x7b (Hex.) | **R8303** | 0x0000 |
| | **R8302** | 0x007b |

When a value with a decimal point is substituted to a variable like "#50001 = 123.456 ;", the numbers after the decimal point will be truncated and "123" will be set.

(2) When decimal point valid is selected:

According to the settings of the parameter "#1003 iunit" (inupt setting unit) and "#1041 I_inch" (initial inch), values which are shifted for the number of decimals will be set in the R device, as shown below.

| #1041 I_inch | | 0: Metric | | | |
|---|---|---|---|---|---|
| #1003 iunit | | B | C | D | E |
| #50001 | | 123000 (Decimal) = 0x1e078 (Hex.) | 1230000 (Decimal) = 0x12c4b0 (Hex.) | 12300000 (Decimal) = 0xbbaee0 (Hex.) | 123000000 (Decimal) = 0x754d4c0 (Hex.) |
| Device | R8303 | 0x0001 | 0x0012 | 0x00bb | 0x0754 |
| | R8302 | 0xe078 | 0xc4b0 | 0xaee0 | 0xd4c0 |

| #1041 I_inch | | 1: Inch | | | |
|---|---|---|---|---|---|
| #1003 iunit | | B | C | D | E |
| #50001 | | 1230000 (Decimal) = 0x12c4b0 (Hex.) | 12300000 (Decimal) = 0xbbaee0 (Hex.) | 123000000 (Decimal) = 0x754d4c0 (Hex.) | 1230000000 (Decimal) = 0x49504f80 (Hex.) |
| Device | R8303 | 0x0012 | 0x00bb | 0x0754 | 0x4950 |
| | R8302 | 0xc4b0 | 0xaee0 | 0xd4c0 | 0x4f80 |

When a value with a decimal point is substituted to a variable like "#50001 = 123.456 ;", the value will directly be set.

| #1041 I_inch | | 0: Metric | | | |
|---|---|---|---|---|---|
| #1003 iunit | | B | C | D | E |
| #50001 | | 123456 (Decimal) = 0x1e240 (Hex.) | 1234560 (Decimal) = 0x12d680 (Hex.) | 12345600 (Decimal) = 0xbc6100 (Hex.) | 123456000 (Decimal) = 0x75bca00 (Hex.) |
| Device | R8303 | 0x0001 | 0x0012 | 0x00bc | 0x075b |
| | R8302 | 0xe240 | 0xd680 | 0x6100 | 0xca00 |

| #1041 I_inch | | 1: Inch | | | |
|---|---|---|---|---|---|
| #1003 iunit | | B | C | D | E |
| #50001 | | 1234560 (Decimal) = 0x12d680 (Hex.) | 12345600 (Decimal) = 0xbc6100 (Hex.) | 123456000 (Decimal) = 0x75bca00 (Hex.) | 1234560000 (Decimal) = 0x4995e400 (Hex.) |
| Device | R8303 | 0x0012 | 0x00bc | 0x075b | 0x4998 |
| | R8302 | 0xd680 | 0x6100 | 0xca00 | 0xe400 |

If the number of decimals of the substituted data exceeds the number of significant figures, the value will be rounded off to the number of significant figures and will be set.

When "#50001 = 123.4567899 ;".

| #1041 I_inch | | 0: Metric | | | |
|---|---|---|---|---|---|
| #1003 iunit | | B | C | D | E |
| #50001 | | 123457 (Decimal) = 0x1e241 (Hex.) | 1234568 (Decimal) = 0x12d688 (Hex.) | 12345679 (Decimal) = 0xbc614f (Hex.) | 123456790 (Decimal) = 0x75bcd16 (Hex.) |
| Device | R8303 | 0x0001 | 0x0012 | 0x00bc | 0x075b |
| | R8302 | 0xe241 | 0xd688 | 0x614f | 0xcd16 |

| #1041 I_inch | | 1: Inch | | | |
|---|---|---|---|---|---|
| #1003 iunit | | B | C | D | E |
| #50001 | | 1234568 (Decimal) = 0x12d688 (Hex.) | 12345679 (Decimal) = 0xbc614f (Hex.) | 123456790 (Decimal) = 0x75bcd16 (Hex.) | 1234567899 (Decimal) = 0x499602db (Hex.) |
| Device | R8303 | 0x0012 | 0x00bc | 0x075b | 0x4996 |
| | R8302 | 0xd688 | 0x614f | 0xcd16 | 0x02db |

### Use of R device access variables in control command

These variables can be used in control command.
However, note that the variable value and the condition of true/false differ between decimal point valid variables and invalid variables.

```
IF [#50003 EQ 1] GOTO 30 ;
G00 X100  ;
N30
```

(1) When decimal point invalid is selected:

Regardless of the setting of the parameter "#1003 iunit" (input setting unit) and "#1041 I_inch" (initial inch), R device value of #50003 whose condition is true, will be "1".

| #50003 | Device | Value |
|---|---|---|
| 1 (Decimal)<br>= 0x01 (Hex.) | R8307 | 0x0000 |
| | R8306 | 0x0001 |

(2) When decimal point valid is selected:

The condition is true when #50003 is "1". So the R device value of #50003 will be as follows depending on the setting of the parameter "#1003 iunit" (inupt setting unit) and "#1041 I_inch" (initial inch).

| #1041 I_inch | | 0: Metric | | | |
|---|---|---|---|---|---|
| #1003 iunit | | B | C | D | E |
| #50003 | | 1000 (Decimal)<br>= 0x3e8 (Hex.) | 10000 (Decimal)<br>= 0x2710 (Hex.) | 100000 (Decimal)<br>= 0x186a0 (Hex.) | 1000000 (Decimal)<br>= 0xf4240 (Hex.) |
| Device | R8307 | 0x0000 | 0x0000 | 0x0001 | 0x000f |
| | R8306 | 0x03e8 | 0x2710 | 0x86a0 | 0x4240 |

| #1041 I_inch | | 1: Inch | | | |
|---|---|---|---|---|---|
| #1003 iunit | | B | C | D | E |
| #50003 | | 10000 (Decimal)<br>= 0x2710 (Hex.) | 100000 (Decimal)<br>= 0x186a0 (Hex.) | 1000000 (Decimal)<br>= 0xf4240 (Hex.) | 10000000 (Decimal)<br>= 0x989680 (Hex.) |
| Device | R8307 | 0x0000 | 0x0001 | 0x000f | 0x0098 |
| | R8306 | 0x2710 | 0x86a0 | 0x4240 | 0x9680 |

## Substitution between R device access variable and other variables.

**[Substitution into R device access variables]**

Common variables and coordinates variables can be substituted to the R device access variables.

(Example 1) Common variables

```
#101 = -123.456 ;
#50004 = #101 ;
```

(Example 2) #5063 : Skip coordinates #5063

```
#50004 = #5063 ;
```

(1) When decimal point invalid is selected:

Regardless of the settings of the parameter "#1003 iunit" (inupt setting unit) and "#1041 I_inch" (initial inch), the value which is rounded off will be set.
When the common variable and coordinate variable in the above example are "-123.456":

| #50004 | Device | Value |
|---|---|---|
| -123 (Decimal) = 0xffffff85 (Hex.) | **R8309** | 0xffff |
| | **R8308** | 0x0085 |

(2) When decimal point valid is selected:

Substitution will be as follows according to the settings of the parameter "#1003 iunit" (inupt setting unit) and "#1041 I_inch" (initial inch).

| **#1041 I_inch** | | **0: Metric** | | | |
|---|---|---|---|---|---|
| **#1003 iunit** | | **B** | **C** | **D** | **E** |
| #50004 | | -123456 (Decimal) = 0xfffe1dc0 (Hex.) | -1234560 (Decimal) = 0xffed2980 (Hex.) | -12345600 (Decimal) = 0xff439f00 (Hex.) | -123456000 (Decimal) = 0xf8a43600 (Hex.) |
| Device | R8309 | 0xfffe | 0xffed | 0xff43 | 0xf8a4 |
| | R8308 | 0x1dc0 | 0x2980 | 0x9f00 | 0x3600 |

| **#1041 I_inch** | | **1: Inch** | | | |
|---|---|---|---|---|---|
| **#1003 iunit** | | **B** | **C** | **D** | **E** |
| #50004 | | -1234560 (Decimal) = 0xffed2980 (Hex.) | -12345600 (Decimal) = 0xff439f00 (Hex.) | -123456000 (Decimal) = 0xf8a43600 (Hex.) | -1234560000 (Decimal) = 0xb66a1c00 (Hex.) |
| Device | R8309 | 0xffed | 0xff43 | 0xf8a4 | 0xb66a |
| | R8308 | 0x2980 | 0x9f00 | 0x3600 | 0x1c00 |

**[Substitution of R device access variables]**

```
#50005 = 123.456789 ;
#102 = #50005 ;
```

(1) When decimal point invalid is selected:

Regardless of the settings of the parameter "#1003 iunit" (inupt setting unit) and "#1041 I_inch" (initial inch), #102 will be "123".

(2) When decimal point valid is selected:

Substitution will be as follows according to the settings of the parameter "#1003 iunit" (inupt setting unit) and "#1041 I_inch" (initial inch).

| **#1041 I_inch** | **0: Metric** | | | |
|---|---|---|---|---|
| **#1003 iunit** | **B** | **C** | **D** | **E** |
| #102 | 123.4570 | 123.4568 | 123.4568 | 123.4568 |

| **#1041 I_inch** | **1: Inch** | | | |
|---|---|---|---|---|
| **#1003 iunit** | **B** | **C** | **D** | **E** |
| #102 | 123.4568 | 123.4568 | 123.4568 | 123.4568 |

## Precautions

(1) The position of a decimal point changes depending on the settings of the parameter "#1003 iunit" (input setting unit) and "#1041 I_inch" (initial inch). Fix the decimal point position while considering these parameter settings when setting a number to an R device.

(2) These variables do not handle <Blank>. If #0<Blank> is substituted, it will be converted into "0".
Therefore, when comparing this variable after substituting #0<Blank> and #0<Blank> with a conditional expression (EQ), it will not be formed.

(3) If a value exceeding the allowable range is substituted into this variable, a program error (P35) will occur.

(4) When these values are used as decimal point invalid, the settings of "#1078 Decpt2" (Decimal point type 2) and "#8044 UNIT*10" will not be applied.

(5) When a graphic is being checked, writing into R device will not be executed even if a value is substituted into these variables.
For reading of these variables (reference to the R device value) during a graphic check, "0" is always read.

# 23.24 System Variables (PLC Data Reading)

## Function and purpose

PLC data can be read in with the system variables.

| Variable No. | Application |
|---|---|
| #100100 | Device type designation |
| #100101 | Device No. designation |
| #100102 | Number of read bytes designation |
| #100103 | Read bit designation |
| #100110 | Reading PLC data |

### Note

(1) Not available with E80 Type B.

(2) The readable devices are limited.

## Detailed description

The PLC data is read in with the following five blocks using these five system variables.

#100100 = 1; Designates the device type.

#100101 = 0; Designates the device No.

#100102 = 1; Designates the number of bytes.

#100103 = 2; Designates the bit. (Valid only when reading word device bits.)

#100=#100110; Reads in the PLC data.

### Device designation (#100100)

(1) System variable for device designation

The type of device to be read in can be designated by substituting the device designation value in this system variable.
If the data is read without designating this variable, the data will be read in the same manner as when the minimum value (0: M device) of the device designation value is designated. Once designated, the setting is held until the device is designated again or until it is reset.
A program error (P39) will occur if a nonexistent device is set.

(2) Device designation value

[M8 series]

| Device designation value | Device | Unit | Device No. |
|---|---|---|---|
| 0 | M | Bit | M0 - M61439 |
| 1 | D | Word | D0 - D4095 |
| 2 | C | Bit | C0 - C511 |
| 4 | X (*1) | Bit | X0 - X1FFF |
| 5 | Y (*1) | Bit | Y0 - Y1FFF |
| 6 | R | Word | R0 - R32767 |
| 7 | T | Bit | T0 - T2047 |
| 9 | SM | Bit | SM0 - SM2047 |

| Device designation value | Device | Unit | Device No. |
|---|---|---|---|
| 10 | F | Bit | F0 - F2047 |
| 13 | L | Bit | L0 - L1023 |
| 18 | V | Bit | V0 - V511 |
| 19 | ST | Bit | ST0 - ST127 |
| 20 | SD | Word | SD0 - SD2047 |
| 21 | SB (*1) | Bit | SB0 - SB3FF |
| 22 | SW (*1) | Word | SW0 - SW3FF |
| 23 | B (*1) | Bit | B0 - BDFFF |
| 24 | W (*1) | Word | W0 - W2FFF |

[C80 series]

| Device designation value | Device | Unit | Device No. |
|---|---|---|---|
| 0 | M | Bit | M0 - M61439 |
| 1 | D | Word | D0 - D8191 |
| 2 | C | Bit | C0 - C511 |
| 4 | X (*1) (*2) | Bit | X0 - X1FFF |
| 5 | Y (*1) (*2) | Bit | Y0 - Y1FFF |
| 6 | R (*2) | Word | R0 - R32767 |
| 7 | T | Bit | T0 - T2047 |
| 9 | SM (*2) | Bit | SM0 - SM4095 |

| Device designation value | Device | Unit | Device No. |
|---|---|---|---|
| 10 | F | Bit | F0 - F2047 |
| 13 | L | Bit | L0 - L1023 |
| 18 | V | Bit | V0 - V511 |
| 19 | ST | Bit | ST0 - STI27 |
| 20 | SD | Word | SD0 - SD4095 |
| 21 | SB (*1) | Bit | SB0 - SB3FF |
| 22 | SW (*1) | Word | SW0 - SW1023 |
| 23 | B (*1) | Bit | B0 - BDFFF |
| 24 | W (*1) | Word | W0 - W2FFF |

The unit indicates the amount of data per device No. "Word" is 16 bits, and "Bit" is one bit.
(*1) Device of which the device number is indicated in hexadecimal notation.

(*2) The device marked by an asterisk (*) in the Device column has the determined use; therefore, do not use the undefined device number even for a vacant device.

## Device No. designation (#100101)

The device to be read in is designated by substituting the device No. in this system variable.
Convert a device expressed as a hexadecimal into a decimal when designating.
If the data is read without designating this number, the data will be read in the same manner as when the minimum device No. (0) is designated. Once designated, the setting is held until the device No. is designated again or until it is reset.
A program error (P39) will occur if a nonexistent device No. is set.

## Number of bytes designation (#100102)

(1) System variable for number of bytes designation

The reading size is designated by substituting the number of bytes designation value in this system variable.
If the data is read without designating this number, the data will be read in the same manner as when the minimum device designation value (0: M device) is designated. Once designated, the setting is held until the number of bytes is designated again or until it is reset.
A program error (P39) will occur if a number of bytes that does not exist in the specifications is set.

(2) Number of bytes designation value

| Number of bytes designation value | Read in data | | | Operation | |
|---|---|---|---|---|---|
| | Size | Sign | Range | Word device | Bit device |
| 0 | 1 bit | - | 0 to 1 | The number of bits designated is read in. | The bits for the designated device No. are read in. |
| 1 | 1 bytes | No | 0 to 255 | The low-order byte is read in. | 8 bits are read in from the designated device No. |
| 101 | | Yes | -128 to 127 | | |
| 2 | 2 bytes | No | 0 to 65535 | Two bytes are read in. | 16 bits are read in from the designated device No. |
| 102 | | Yes | -32768 to 32767 | | |
| 4 | 4 bytes | No | 0 to 4294967295 | The designated device (L) and next device (H) are read in. | 32 bits are read in from the designated device No. |
| 104 | | Yes | -2147483648 to 2147483647 | | |

0 to 4 are designated without a sign, and 101 to 104 are designated with a sign.

### Bit designation (#100103)

(1) System variable for bit designation

The bit to be read in is designated by substituting the bit designation value in this system variable.
This designation is valid only when reading the bits for a 16-bit device, and is invalid for the others.
If the data is read without designating this number, the data will be read in the same manner as if the minimum bit designation value (0: bit 0) is designated. Once designated, the setting is held until the bit is designated again or until it is reset.
A program error (P39) will occur if a nonexistent bit is set.

(2) Bit designation value

| Bit designation value | Read in bit |
|---|---|
| 0 | Bit 0 |
| 1 | Bit 1 |
| : | : |
| 15 | Bit 15 |

### Reading PLC data (#100110)

The data for the designated device is read in with this system variable.
Refer to the table for number of bytes designation for details on the range of data read in.

## Program example

(1) To read a bit device

| | |
|---|---|
| #100100 = 0; | Designates [M device]. |
| #100101 = 0; | Designates [Device No. 0]. |
| #100102 = 0; | Designates [Bit]. |
| #100 = #100110; | Reads M0 (one bit). |
| #100102 = 1; | Designates [1 byte]. |
| #101 = #100110; | Reads M0 to M7 (8 bits).<br>(If M7 to M0 is 0001 0010, this will be #101 = 18 (0x12).) |
| #100102 = 102; | Designates [Signed two bytes]. |
| #102 = #100110; | Reads M0 to M15 (16 bits).<br>(If M15 to M0 is 1111 1110 1101 1100, this will be #102 = -292 (0xFEDC).) |
| #100102 = 4; | Designates [4 byte]. |
| #104 = #100110; | Reads M0 to M31 (32 bits).<br>(If M31 to M0 is 0001 0010 0011 0100 0101 0110 0111 1000, #104 = 305419896 (0x12345678).) |

(2) To read a word device

| | |
|---|---|
| #100100 = 1; | Designates [D device]. |
| #100101 = 0; | Designates [Device No. 0]. |
| #100102 = 0; | Designates [Bit]. |
| #100103 = 1; | Designates [Bit 1]. |
| #100 = #100110; | Reads the D0 bit 1.<br>(If D0 = 0x0102, #100 =1.) |
| #100102 = 1; | Designates [1 byte]. |
| #101 = #100110; | Reads the low-order byte of D0.<br>(If D0 = 0x0102, #101 =2.) |
| #100102 = 2; | Designates [2 byte]. |
| #102 = #100110; | Reads D0. (If D0 = 0x0102, #102 =258.) |
| #100102 = 104; | Designates [Signed four bytes]. |
| #104 = #100110; | Reads D0 and D1.<br>(If D0 = 0xFFFE and D1 = 0xFFFF, #104 =-2.) |

## Precautions

(1) As the PLC data is read asynchronously from the ladder execution, the data is not necessarily the one which was gained when the program was executed. Be careful when reading devices which are changing.

(2) If reading of a nonexistent device is attempted by designating the device No. and number of bytes, the 0 value will be read in only for the nonexistent section.

(3) When "1" is set to the parameter "#1316 CrossCom", #100100 to #100110 cannot be used as system variables to read PLC data.

# 23.25 System Variables (Interfering Object Selection)

### Detailed description

Select 16 interfering objects to use in the interference check III with system variables or R register.
Refer to the "PLC Interface Manual" for the R register.
When selecting an interfering object, specify the specification of the selected interfering object and interfering model coordinate system offset 1.
The write command to the system variables (#40000 to #40097) is possible only in the machine tool builder macro programs (O100010000 to O199999998).

| System variable | R register | Item | Details | Setting range (unit)<br>Upper: System variable<br>Lower: R register |
|---|---|---|---|---|
| #40000 | R20304 | Interfering object enable/disable designation | Set enable/disable for each interfering object.<br>Bit designation (0: enable 1: disable) | 0 to 65535 (decimal) |
| | | | bit0: Disable 1st interfering object<br>:<br>bitF: Disable 16th interfering object | 0x0000 to 0xFFFF (hexadecimal) |
| #40001 | R20305 | preliminary | | 0 |
| | | | | 0 |
| #40002 | R20306 | 1st interfering object selection | Select interfering object definition No. to use. | 0 to 128 (0: not selected) |
| | | | | 0 to 128 (0: not selected) |
| #40003 | R20307 | 1st interfering object specification | In the configured solid specification of the interfering object definition, specify alarm area/warning area/ solid setting invalid of the solid in which switching method is selected. | 0 to 3 |
| | | | 0, 1: Alarm area<br>2: Warning area<br>3: Solid setting invalid | 0 to 3 |
| #40004 | R20308 (L) | 1st interfering model coordinate system I axis offset 1 | Set the interfering model coordinate system offset with a radius value. (I axis direction) (*1) | -99999.999 to 99999.999 (mm) (radius value) |
| | R20309 (H) | | | |
| #40005 | R20310 (L) | 1st interfering model coordinate system J axis offset 1 | Set the interfering model coordinate system offset with a radius value. (J axis direction) (*1) | |
| | R20311 (H) | | | -99999999 to 99999999 (μm) (radius value) |
| #40006 | R20312 (L) | 1st interfering model coordinate system K axis offset 1 | Set the interfering model coordinate system offset with a radius value. (K axis direction) (*1) | |
| | R20313 (H) | | | |
| : | : | | | |
| #40077 | R20426 | 16th interfering object selection | Same as above | Same as above |
| #40078 | R20427 | 16th interfering object specification selection | Same as above | Same as above |
| #40079 | R20428 (L) | 16th interfering model coordinate system I axis offset 1 | Same as above | Same as above |
| | R20429 (H) | | | |
| #40080 | R20430 (L) | 16th interfering model coordinate system J axis offset 1 | Same as above | Same as above |
| | R20431 (H) | | | |

| System variable | R register | Item | Details | Setting range (unit)<br>Upper: System variable<br>Lower: R register |
|---|---|---|---|---|
| #40081 | R20432 (L)<br>R20433 (H) | 16th interfering model coordinate system K axis offset 1 | Same as above | Same as above |
| #40082 | R20434 | 1st interfering object Interference check III: Specifying disabled interfering object | Select an interfering object that you do not check the interference with the 1st interfering object.<br>bit0: Disable 1st interfering object (inaction data)<br>bit1: Disable 2nd interfering object<br>:<br>bitF: Disable 16th interfering object | 0 to 65535 (decimal)<br>0x0000 to 0xFFFF (hexadecimal) |
| #40083 | R204325 | 2nd interfering object Interference check III: Specifying disabled interfering object | Select an interfering object that you do not check the interference with the 2nd interfering object.<br>bit0: Disable 1st interfering object<br>bit1: Disable 2nd interfering object (inaction data)<br>:<br>bitF: Disable 16th interfering object | 0 to 65535 (decimal)<br>0x0000 to 0xFFFF (hexadecimal) |
| : | : | | | |
| #40097 | R20449 | 16th interfering object Interference check III: Specifying disabled interfering object | Select an interfering object that you do not check the interference with the 16th interfering object.<br>bit0: Disable 1st interfering object<br>bit1: Disable 2nd interfering object<br>:<br>bitF: Disable 16th interfering object (inaction data) | 0 to 65535 (decimal)<br>0x0000 to 0xFFFF (hexadecimal) |

(*1) The interfering model coordinate system offset is the sum of the interfering model coordinate system offsets 1 and 2.

### Interference check III: Specifying disabled interfering object

(Example) In the case that you do not check the interference between the 1st interfering object and the 2nd interfering object
"R20434 (#40082): 0x0002 (disable 2nd interfering object)" or "R20435 (#40083): 0x0001 (disable 1st interfering object)"
Since each interfering object is designated to perform the interference check, the setting of the interference check III specifying disabled interference object is repeated, but if either one is on disabled setting, the interference check is not performed.

| Back side of spindle part (without a workpiece) | Back side of spindle part (with a workpiece) |
|---|---|
| 1st interfering object<br>(back side of spindle part)<br> 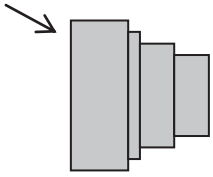 | 1st interfering object<br>(back side of spindle part)<br>2nd interfering object (workpiece part)<br> 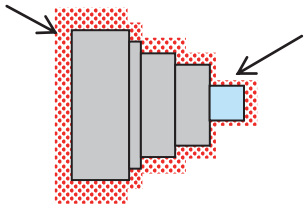 <br>By specifying the interference III disabled between the back side of spindle part (1st interfering object) and workpiece part (2nd interfering object), these 2 parts are treated as one interfering object. |

## Precautions

(1) When the interfering object selection is input with the system variables, the system variable in which the command range integer is set in R register with the value after the decimal point being ignored.
(a) When any value out of the setting range is input in #40000 to #40097, the low-order 16 bits of the input value are set in R register.
(b) When "#0" <empty> is input in #40000 to #40097, "0" is set in R register.

(2) If you have made a write command to the system variable (#40000 to #40097) in a program except for the machine tool builder macro program, the program error (P241) occurs.

# 23.26 System Variables (ZR Device Access Variables) [C80]

## Detailed description

System variables that can read and write data from and to the ZR device are provided by 2,250 sets (#50000 to #52749).
Data can be read and written between the NC machining program and RnCPU sequence program by using the ZR device as shown below.
How to handle the ZR device in the RnCPU sequence program depends on the MTB specifications.
Refer to the "PLC Interface Manual" for the DDWR/DDRD command.

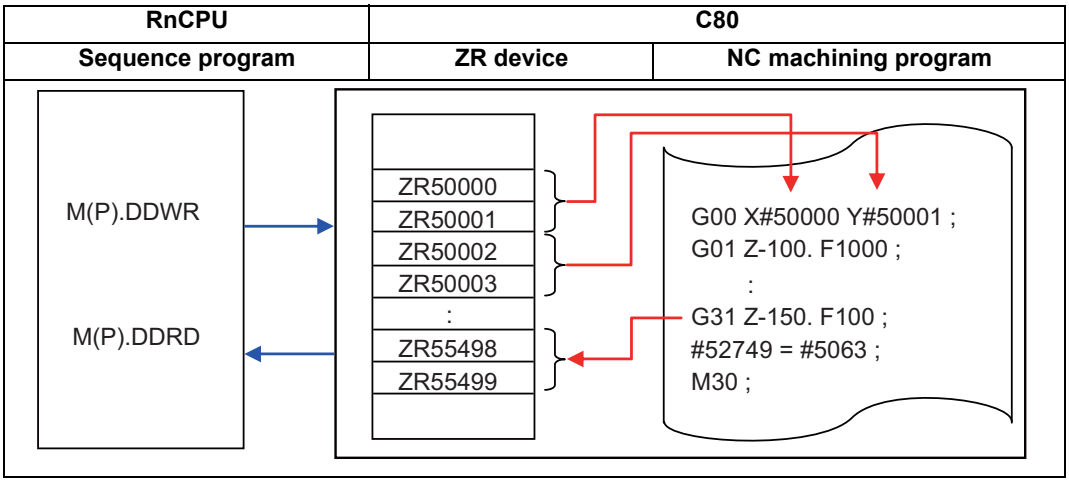


### Number of variable sets

The table below shows a list of variables specific to C80.
A ZR device access variable is based on long-type data, and a ZR device on word-type data.
Therefore, when this variable is read or a value is substituted to this variable, it reads and writes two words of the ZR device. The correspondence between the ZR device access variable numbers and ZR device numbers is shown below.

| Variable No. (2,250 sets) | | Corresponding ZR device (4,500 units) (*1) |
|---|---|---|
| #50000 - #50749 | #50000 | ZR50000, ZR50001 |
| | #50001 | ZR50002, ZR50003 |
| | #50002 | ZR50004, ZR50005 |
| | : | : |
| | #50000+n | ZR50000+2n, ZR50000+2n+1 |
| | : | : |
| | #50749 | ZR51498, ZR51499 |
| #51000 - #51749 | #51000 | ZR52000, ZR52001 |
| | : | : |
| | #51749 | ZR53498, ZR53499 |
| #52000 - #52749 | #52000 | ZR54000, ZR54001 |
| | : | : |
| | #52749 | ZR55498, ZR55499 |

(*1) The data of ZR devices are also allocated to the following R devices.

| ZR device | R device |
|---|---|
| ZR50000 - ZR51499 | R8300 - R9799 |
| ZR51000 - ZR53499 | R18300 - R19799 |
| ZR54000 - ZR55499 | R28300 - R29799 |

(1) The data range of these variables is -2147483648 to 2147483647.

(2) The ZR device is backed up even when the power is turned OFF; therefore, the value is maintained after the power has been turned ON again.

(3) Whether this variable is used with the decimal point invalid or valid can be selected for each user backup area according to the MTB specifications (parameter "#6455 bit0 -bit2").

(4) When "decimal point valid" is selected, the position of the decimal point depends on the MTB specifications (parameters "#1003 iunit" (input setting unit) and "#1041 I_inch" (initial inch)).
Therefore, to set a numeric value to a ZR device, consider the position of the decimal point according to these parameters.
The table below shows the number of digits that is valid after the decimal point.

| #1041 I_inch | #1003 iunit | | | |
|---|---|---|---|---|
| | B | C | D | E |
| Metric | 3 digits | 4 digits | 5 digits | 6 digits |
| Inch | 4 digits | 5 digits | 6 digits | 7 digits |

(5) When the data is read from or written to the system variables #50000 to #52479 by the machining program command, the machining program is performed block by block. This allows the ZR registers and variables to be synchronized, allowing data to be passed quickly to the sequence program.
However, the operation can be switched to the batch processing with other macro statements by setting the parameter "#1701 cfg01/bit3" to "1".

# 23.27 System Variables (NC Data Reading/Writing with API Section and Sub-section Nos. Input/Output by Program) [M8]

Use system variables to designate the section No., sub-section No., part system No., and axis No.; you can read and write data in the NC.

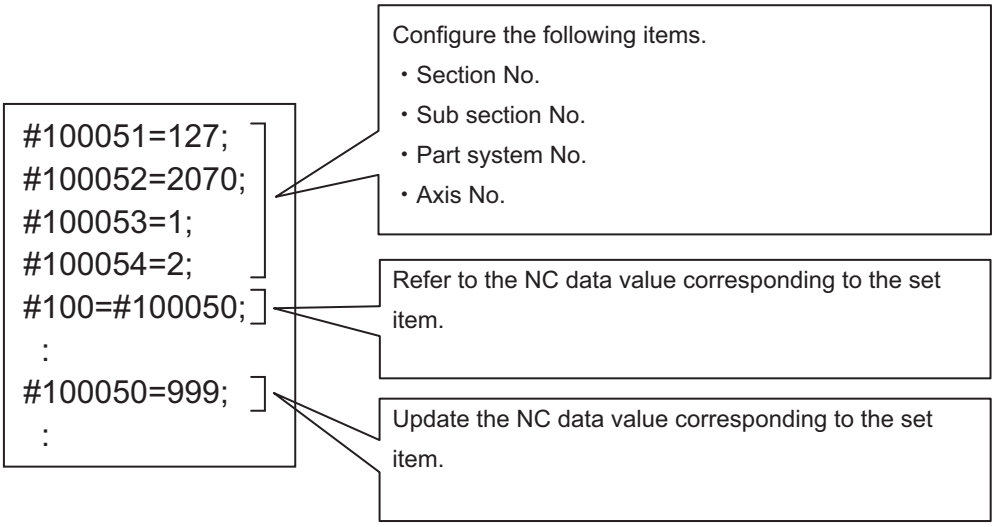


| Variable No. | Item | Value | Description |
|---|---|---|---|
| #100050 | NC data | Signed 4-byte data value | At reading: Reads the data values corresponding to various numbers shown below. |
| | | | At writing: Sets the designated value as the NC data value. |
| #100051 | Section No. | Integer value | Designate the data type. |
| #100052 | Sub-section No. | Integer value | Designate data. |
| #100053 | Part system No. | 0 to 8 | Designate the part system No.<br>If the part system No. is omitted, the system runs as the self part system. No part system needs to be designated for data if one is not required. |
| #100054 | Axis No. | 0 to 32 | Designate the axis No.<br>If the axis No. is omitted, the system runs using a single axis. No axis needs to be designated for data if one is not required. |

**Note**

(1) A program error (P35) occurs in the following cases:

- The section No. is invalid.
- The sub-section No. is invalid.
- The part system No. is invalid.
- The axis No. is invalid.

(2) A program error (P243) occurs in the following cases:

- The read command is issued to the write-only variable.
- The write command is issued to the read-only variable.
- The write command is issued when data writing is not possible.

## Use examples

(1) When referencing NC data

| Setting | Left-side value | Right-side value |
|---|---|---|
| #100051=127 ; | Section No. designation | Axis parameter |
| #100052=2070 ; | Sub-section No. designation | Number of rotary axis division |
| #100053=1 ; | Part system No. designation | 1st part system |
| #100054=2 ; | Axis No. designation | 2nd axis |
| #100=#100050 ; | NC data reference | |
| #100053=2 ; | Part system No. designation | 2nd part system |
| #101=#100050 ; | NC data reference | |
| #100053=3 ; | Part system No. designation | 3rd part system |
| #102=#100050 ; | NC data reference | |
| #100053=4 ; | Part system No. designation | 4th part system |
| #103=#100050 ; | NC data reference | |

### Note

- The section No., sub-section No., part system No., and axis No. can be designated in random order. When these values have already been designated in the previous operation, they can be omitted. However, designate them before reading NC data.

(2) When updating NC data

| Setting | Left-side value | Right-side value |
|---|---|---|
| #100051=127 ; | Section No. designation | Axis parameter |
| #100052=2070 ; | Sub-section No. designation | Number of rotary axis division |
| #100053=1 ; | Part system No. designation | 1st part system |
| #100054=1 ; | Axis No. designation | 1st axis |
| #100050=999 ; | NC data update | Designate the maximum value in the range of 0 to 999. |
| #100054=2 ; | Axis No. designation | 2nd axis |
| #100050=500 ; | NC data update | Designate "500" in the range of 0 to 999. |
| #100054=3 ; | Axis No. designation | 3rd axis |
| #100050=10 ; | NC data update | Designate "10" in the range of 0 to 999. |

### Note

- The section No., sub-section No., part system No., and axis No. can be designated in random order. When these values have already been designated in the previous operation, they can be omitted. However, designate them before writing NC data.

(3) When assigning the part system No. and axis No. to variables

| Setting | Left-side value | Right-side value |
|---|---|---|
| #100051=127 ; | Section No. designation | Axis parameter |
| #100052=2070 ; | Sub-section No. designation | Number of rotary axis division |
| #100=8 ; | Maximum value of part system No. | |
| #101=5 ; | Maximum value of axis No. | |
| #102=#101 ; | Retains the maximum value of the axis No. | |
| WHILE[#100GT0]DO1 ; | Repeats processing by a number of times equivalent to the part system No. (repeats processing of 1 to 8 part systems). | |
| WHILE[#101GT0]DO2 ; | Repeats processing by a number of times equivalent to the axis No. (repeats processing of 1 to 5 axes). | |
| #100053=#100 ; | Part system No. designation | |
| #100054=#101 ; | Axis No. designation | |
| #103=#100050 ; | NC data reference | |
| #103=#103-2 ; | Changes the NC data value to a value that is 2 lower than the current value. | |
| #100050=#103 ; | NC data update | |
| #101=#101-1 ; | Subtracts the axis No. | |
| END2 | Ends repeat processing by a number of times equivalent to the axis No. | |
| #101=#102 ; | Returns the axis No. to the initial setting value. | |
| #100=#100-1 ; | Subtracts the axis No. | |
| END1 | Ends repeat processing by a number of times equivalent to the part system No. | |

## Precautions

(1) NC data is read and written by accessing "#100050" for reading/writing.
Therefore, designate the section No., sub-section No., part system No., and axis No. before accessing "#100050".

(2) "#100051" to "#100054" (section No., sub-section No., part system No., and axis No.) are cleared by NC reset 1 or Reset & rewind. After NC reset 1 or Reset & rewind was commanded, designate those numbers again.

(3) It is prohibited to pre-read "#100050" to "#100054".

(4) When the system runs with a graphic check (background or foreground), writing is not performed.

(5) If NC data reading or writing fails, buffer correction cannot be performed.

# 24

# Appx.1: Fixed Cycles

**[G37 (O100000370) Automatic tool length measurement]**

```
G31 Z#5 F#3 ;
IF[ ROUND[ ABS[#2-[##10*#11-#12]]] GT#8]G
OTO1 ;
IF[ ROUND[##10*#11-#12] EQ#4] GOTO1 ;
##9=##10-#12/#11-#2/#11+##9 ;
#3003=#1 ;
N2 ;
M99 ;
N1#3901=126 ;
```

**[G74 (O100000740) End face cutoff cycle]**

```
G.1 ;
IF[ ABS[#2] GT0] GOTO10 ;
#14=1 ;
N10#13=#3 ;
IF[#15NE0] GOTO11 ;
#13=#3-#5 ;
N11#16=0 ;
DO1 ;
#10=0 ;
#11=#4 ;
DO2 ;
#10=#10+#4 ;
IF[ ABS[#10] GE[ ABS[#1]]] GOTO1 ;
G01 X#11 ;
G00 X#6 ;
#11=#4-#6 ;
END2 ;
N1 G01 X#1-#10+#11 ;
IF[#15 EQ0] GOTO20 ;
IF[#16 EQ0] GOTO21 ;
N20 G00 Y#5 ;
N21#16=1 ;
G00 X-#1 ;
IF[#14] GOTO3 ;
#12=#12+#3 ;
IF[ ABS[#12] LT[ ABS[#2]]] GOTO2 ;
#14=1 ;
#13=#2-#12+#13 ;
N2 G00Y#13 ;
#13=#3-#5 ;
END1 ;
N3 G00 Y-#2-#5 ;
M99 ;
```

**[G75 (O100000750) Longitudinal cutting cycle]**

```
G.1 ;
IF[ ABS[#2] GT0] GOTO10 ;

#14=1 ;
N10#13=#3 ;
IF[#15NE0] GOTO11 ;
#13=#3-#5 ;
N11#16=0 ;
DO1 ;
#10=0 ;
#11=#4 ;
DO2 ;
#10=#10+#4 ;
IF[ ABS[#10] GE[ ABS[#1]]] GOTO1 ;
G01 X#11 ;
G00 X#6 ;
#11=#4-#6 ;
END2 ;
N1 G01 X#1-#10+#11 ;
IF[#15 EQ0] GOTO20 ;
IF[#16 EQ0] GOTO21 ;
N20 G00 Y#5 ;
N21#16=1 ;
G00 X-#1 ;
IF[#14] GOTO3 ;
#12=#12+#3 ;
IF[ ABS[#12] LT[ ABS[#2]]] GOTO2 ;
#14=1 ;
#13=#2-#12+#13 ;
N2 G00Y#13 ;
#13=#3-#5 ;
END1 ;
N3 G00 Y-#2-#5 ;
M99 ;
```

**[G76 (O100000760) Compound thread cutting cycle]**

```
G.1 ;
#12=1 ;
#13=#9 ;
IF[ ABS[#13] GE[ ABS[#8]]] GOTO1 ;
#16=1 ;
#13=#8 ;
N1#11=#13 ;
IF[ ABS[#11] LT[ ABS[#4-#5]]] GOTO2 ;
#11=#4-#5 ;
#14=1 ;
N2#17=#11 ;
#10= ROUND[[#11+#5]*#7] ;
IF[[#10 XOR#1] GE0] GOTO20 ;

#10=-#10 ;N20 G00X#10 ;
#55=#10 ;
DO1 ;
#15= ROUND[#10*#3/#1] ;
N90#40=90#41=#5001#42=#5002 ;
G00 Y#2+#3-#4-#15+#11 ;
G33 X#1-#10 Y-#3+#15 Q#22 M96.101 P1000 D3
;
G00 Y-#2+#4-#11 M97.101 ;
IF[#14 GT0] GOTO3 ;
IF[#16 GT0] GOTO7 ;
#12=#12+1 ;
#13= ROUND[#9* SQRT[#12]] ;
IF[ ABS[#13-#11] GE[ ABS[#8]]]GOTO8 ;
#16=1 ;
N7#13=#11+#8 ;
N8#11=#13 ;
IF[ ABS[#11] LT[ ABS[#4-#5]]] GOTO9 ;
#11=#4-#5 ;
#14=1 ;
N9#10= ROUND[[#17-#11]*#7] ;
IF[[#10 XOR#1] GE0] GOTO6 ;
#10=-#10 ;
N6#10=#10+#55 ;
G00X-#1+#10 ;
N12 END1 ;
N3IF[ ABS[#6] LT1] GOTO5 ;
#14=0 ;
#13=0 ;
DO2 ;
IF[#14 GT0] GOTO5 ;
#13=#13+#6 ;
IF[ ABS[#13] LT[ ABS[#5]]] GOTO4 ;
#13=#5 ;
#14=1 ;
N4 G00 X#10-#1 ;
N91#40=91#41=#5001#42=#5002 ;
G00 Y#2+#3-#4+#13-#15+#11 ;
G33 X#1-#10 Y-#3+#15 Q#22 M96.101 P1000 D3
;
G00 Y-#2+#4-#13-#11 M97.101 ;
END2 ;
N5 G00X-#1 ;
M99 ;
```

**[G76.1 (O100000761) Two-part system simultaneous compound thread cutting cycle]**

```
G.1 ;
N761! L10 ;
#12=1 ;
#13=#9 ;
IF[ ABS[#13] GE[ ABS[#8]]] GOTO1 ;
#16=1 ;
#13=#8 ;
N1#11=#13 ;
IF[ ABS[#11] LT[ ABS[#4-#5]]] GOTO2 ;
#11=#4-#5 ;
#14=1 ;
N2#17=#11 ;
#10= ROUND[[#11+#5]*#7] ;
IF[[#10 XOR#1] GE0] GOTO3 ;
#10=-#10 ;
N3 G00X#10 ;
#55=#10 ;
DO1 ;
#15= ROUND[#10*#3/#1] ;
N90#40=90#41=#5001#42=#5002 ;
G00 Y#2+#3-#4-#15+#11 ;
! L11 ;
G33 X#1-#10 Y-#3+#15 M96.101 P1000 D3 ;
G00 Y-#2+#4-#11 M97.101 ;
! L12 ;
IF[#14 GT0] GOTO4 ;
IF[#16 GT0] GOTO11 ;
#12=#12+1 ;
#13= ROUND[#9* SQRT[#12]] ;
IF[ ABS[#13-#11] GE[ ABS[#8]]] GOTO12 ;
#16=1 ;
N11#13=#11+#8 ;
N12#11=#13 ;
IF[ ABS[#11] LT[ ABS[#4-#5]]] GOTO13 ;
#11=#4-#5 ;
#14=1 ;
N13#10= ROUND[[#17-#11]*#7] ;
IF[[#10 XOR#1] GE0] GOTO14 ;
#10=-#10 ;
N14#10=#10+#55 ;
G00 X-#1+#10 ;
N15 END1 ;
N4 IF[ ABS[#6] LT1] GOTO5 ;
#14=0 ;
#13=0 ;
DO2 ;
IF[#14 GT0] GOTO5 ;
#13=#13+#6 ;
IF[ ABS[#13] LT[ ABS[#5]]] GOTO21 ;
#13=#5 ;
#14=1 ;
N21 G00 X#10-#1 ;
N91#40=91#41=#5001#42=#5002 ;
G00 Y#2+#3-#4+#13-#15+#11 ;
! L11 ;
G33 X#1-#10 Y-#3+#15 M96.101 P1000 D3 ;
G00 Y-#2+#4-#13-#11 M97.101 ;
! L12 ;
END2 ;
N5 G00 X-#1 ;
M99 ;
```

**[G76.2 (O100000762) Two-part system simultaneous compound thread cutting cycle]**

```
G.1 ;
N762! L10 ;
#12=1 ;
#13=#9 ;
IF[ ABS[#13] GE[ ABS[#8]]] GOTO1 ;
#16=1 ;
#13=#8 ;
N1#11=#13 ;
IF[ ABS[#11] LT[ ABS[#4-#5]]] GOTO2 ;
#11=#4-#5 ;
#14=1 ;
N2#17=#11 ;
#10= ROUND[[#11+#5]*#7] ;
IF[[#10 XOR#1] GE0] GOTO3 ;
#10=-#10 ;
N3 IF[#27 NE1] GOTO4 ;
G00 X#10 ;
N4#55=#10 ;
#28=1 ;
DO1 ;
#15= ROUND[#10*#3/#1] ;
#29=#28 MOD2 ;
IF[[#27 EQ1] AND[#29 EQ0]] GOTO11 ;
IF[[#27 EQ2] AND[#29 EQ1]] GOTO11 ;
N90#40=90#41=#5001#42=#5002 ;
G00 Y#2+#3-#4-#15+#11 ;
! L11 ;
G33 X#1-#10 Y-#3+#15 M96.101 P1000 D3 ;
G00 Y-#2+#4-#11 M97.101 ;
! L12 ;
N11 IF[#14 GT0] GOTO5 ;
IF[#16 GT0] GOTO12 ;
#12=#12+1 ;
#13= ROUND[#9* SQRT[#12]] ;
IF[ ABS[#13-#11] GE[ ABS[#8]]] GOTO13 ;
#16=1 ;
N12#13=#11+#8 ;
N13#11=#13 ;
IF[ ABS[#11] LT[ ABS[#4-#5]]] GOTO14 ;
#11=#4-#5 ;
#14=1 ;
N14#10= ROUND[[#17-#11]*#7] ;
IF[[#10 XOR#1] GE0] GOTO15 ;
#10=-#10 ;
N15#10=#10+#55 ;
IF[[#27 EQ1] AND[#29 EQ1]] GOTO17 ;
IF[[#27 EQ2] AND[#29 EQ0]] GOTO17 ;
IF[[#27 EQ2] AND[#28 EQ1]] GOTO16 ;
G00 X-#1+#10 ;
GOTO17 ;
N16 G00 X#10 ;
N17#28=#28+1 ;
END1 ;
N5 IF[ ABS[#6] LT1] GOTO6 ;
#14=0 ;
#13=0 ;
DO2 ;
IF[#14 GT0] GOTO6 ;
#13=#13+#6 ;
IF[ ABS[#13] LT[ ABS[#5]]] GOTO21 ;
#13=#5 ;
#14=1 ;
N21#29=#28 MOD2 ;
IF[[#27 EQ1] AND[#29 EQ1]] GOTO23 ;
IF[[#27 EQ2] AND[#29 EQ0]] GOTO23 ;
IF[[#27 EQ2] AND[#28 EQ1]] GOTO22 ;
G00 X#10-#1 ;
GOTO91 ;
N22 G00X#10 ;
N91#40=91#41=#5001#42=#5002 ;
G00 Y#2+#3-#4+#13-#15+#11 ;
! L11 ;
G33 X#1-#10 Y-#3+#15 M96.101 P1000 D3 ;
G00 Y-#2+#4-#13-#11 M97.101 ;
! L12 ;
N23#28=#28+1 ;
END2 ;
N6 G00 X-#1 ;
M99 ;
```

**[G77 (O100000770) Longitudinal cutting cycle]**

```
G.1 ;
IF[[#1 EQ0] OR[#2 EQ0]] GOTO1 ;
Y#2+#7 ;
G1 X#1 Y-#7 ;
Y-#2 ;
G0 X-#1 ;
N1 M99 ;
```

**[G78 (O100000780) Thread cutting cycle]**

```
G.1 ;
IF[[#1 EQ0] OR[#2 EQ0]] GOTO1 ;
N90#40=90#41=#5001#42=#5002 ;
Y#2+#7 ;
G33 X#1 Y-#7 F#9 E#10 Q#20 M96.101 P1000
D3 ;
G0 Y-#2 M97.101 ;
X-#1 ;
N1 M99 ;
```

**[G79 (O100000790) End face cutting cycle]**

```
G.1 ;
IF[[#1 EQ0] OR[#2 EQ0]] GOTO1 ;
X#1+#7 ;
G1 X-#7 Y#2 ;
X-#1 ;
G0 Y-#2 ;

N1 M99 ;
```

**[G83, G87 (O100000830) Deep hole drilling cycle B]**

```
G.1 ;
IF[#30] GOTO2 ;
M#24 ;
#29=#11#28=0 ;
Z#2 ;
#2=##5#3003=#8 OR1 ;
DO1 ;
#28=#28-#11#26=-#28-#29 ;
Z#26 ;
IF[ ABS[#28] GE[ ABS[#3]]] GOTO1 ;
G1 Z#29 ;
G0 Z#28 ;
#29=#11+#14 ;
END1 ;

N1 G1 Z#3-#26 ;
G4 P#4 ;
#3003=#8 ;
G0 Z-#3-#2 ;
IF[#24 EQ#0] GOTO2 ;
M#24+1 ;
G4 P#56 ;
N2 M99 ;
```

**[G83, G87 (O100000831) Deep hole drilling cycle A]**

```
G.1 ;
IF[#30] GOTO2 ;
M#24 ;
#29=0#28=#11 ;
Z#2 ;
#2=##5#3003=#8OR1 ;
DO1 ;
#29=#29+#11 ;
IF[ ABS[#29] GE[ ABS[#3]]] GOTO1 ;
G1 Z#28 ;
G0 Z-#14 ;
#28=#11+#14 ;
END1 ;
N1 G1 Z#3-#29+#28 ;
G4 P#4 ;
#3003=#8 ;
G0 Z-#3-#2 ;
IF[#24 EQ#0] GOTO2 ;
M#24+1 ;
G4 P#56 ;
N2 M99 ;
```

**[G83.2 (O100000832) Deep hole drilling cycle 2]**

```
G.1 ;
IF[#30] GOTO3 ;
#3003=#8 OR1 ;
#29=#12#28=0#26=0 ;
G0 Z#2 ;
IF[#12 NE#0] GOTO1 ;
IF[#11 EQ#0] GOTO2 ;
N1#28=#28-#12#26=-#28-#29 ;
IF[ ABS[#28] GE[ ABS[#3]]] GOTO2 ;
G1 Z#12 ;
G4 P#4 ;
G0 Z#28-#2 ;
G4 P#13 ;
#29=#11+#15 ;
DO1 ;
#28=#28-#11#26=-#28-#29 ;
G0 Z#26+#2 ;
IF[ ABS[#28] GE[ ABS[#3]]] GOTO2 ;
G1 Z#29 ;
G4 P#4 ;
G0 Z#28-#2 ;
G4 P#13 ;
END1 ;
N2 G1 Z#3-#26 ;
G4 P#4 ;
#3003=#8 ;
G0 Z-#3-#2 ;
N3 M99 ;
```

**[G84, G88 (O100000840) Tapping cycle]**

```
G.1 ;
IF[#30] GOTO2 ;
M#24 ;
Z#2 ;
#2=##5#3003=#8 OR1#3004=#9 OR3 ;
G1 Z#3 ;
G4 P#4 ;
M#53 ;
#3900=1 ;
G1 Z-#3 ;
#3004=#9 ;
M#54 ;
#3003=#8 ;
IF[#24 EQ#0] GOTO1 ;
M#24+1 ;
G4 P#56 ;
N1 G0 Z-#2 ;
N2 M99 ;
```

**[G85, G89 (O100000850) Boring cycle]**

```
G.1 ;
IF[#30] GOTO2 ;
M#24 ;
Z#2 ;
#2=##5#3003=#8 OR1 ;
G1 Z#3 ;
G4 P#4 ;
#3003=#8 ;
Z-#3 F#23 ;
F#22 ;
IF[#24 EQ#0] GOTO1 ;
M#24+1 ;
G4 P#56 ;
N1 G0 Z-#2 ;
N2 M99 ;
```

**[Precautions for MTB]**

- The G.1 command is used to realize the fixed cycle operation. Therefore, do not edit the blocks before the G.1 command such as deleting or inserting another command before the G.1 command.
- The fixed cycle program uses modal information of group 01 dedicated for the fixed cycle program so that the modal of the main program that called the fixed cycle program is not affected. Therefore, there is no need to edit the fixed cycle program based on the modal when returning to the main program. In the fixed cycle program, the modal of group 01 is set to G00 after the G.1 command is executed.

# 25

# Appx.2: Supplementary Explanation for Incomplete Thread Area of Thread Control

## Function and purpose

The delay caused by the automatic acceleration/deceleration and delay caused by the position loop in the servo system create an illegal pitch near the start and end points of thread cutting. When programming steps must be taken to assign thread cutting commands which include a margin for the approach distance 1 and for the length of the area 2 where the thread is incomplete during chamfering, as shown in the figure below.

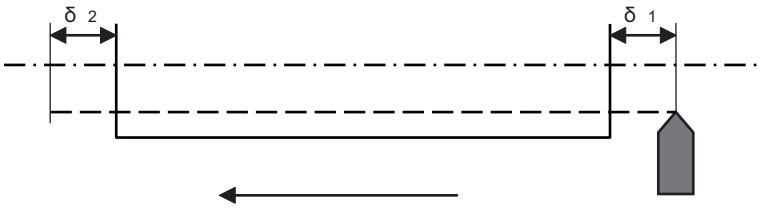


Command direction

δ1 : Approach distance

δ2 : Area where thread is incomplete at retract

## Detailed description

### Approach distance [δ1]

(1) When Ts is not equal to zero (Ts ≠ 0)

$$\delta_1 = \frac{F}{60} t1 - \frac{F}{60}\left(Ts + Tp - \frac{Tp^2 e^{-\frac{t1}{Tp}} - Ts^2 e^{-\frac{t1}{Tp}}}{Tp - Ts}\right) \text{ (mm)}$$

Where F : Thread cutting speed (mm/min)

t1 : Time taken until pitch error reaches allowable limit "a" (s)

Ts : Acceleration/deceleration time constant (s)

Tp : Position loop time constant (s) = 1/Position loop gain(PGN1)

During the SHG control, a position loop gain should be calculated by multiplying √ 2.

If "p" is the pitch and "ΔP" is the pitch error, then allowable limit "a" will be:

$$a = \frac{1}{Tp - Ts}\left(Tp\, e^{-\frac{t1}{Tp}} - Ts\, e^{-\frac{t1}{Ts}}\right)$$

(2) When Ts is equal to zero (Ts = 0)

$$\delta_1 = \frac{F}{60} t1 - \frac{F}{60}\left( Tp - Tp\, e^{\frac{T1}{Tp}} \right) \quad (mm)$$

$$a = e^{-\frac{t1}{Tp}}$$

Since the calculation of approach distance δ1 is a complicated procedure, δ1 is normally determined from the chart on the next page. This chart is used as follows.

(a)Find the position on the p axis scale represents by the thread grade and pitch [P], and follow the perpendicular <1> drawn upward to find the point where it intersects with the curve of acceleration/ deceleration time constant [Ts].

(b) Follow horizontal line <2> and find where it intersects with the thread cutting speed [F].

(c) Follow perpendicular <3> and find approach distance [δ1] on the scale at the point where it intersects with the δ1 axis.

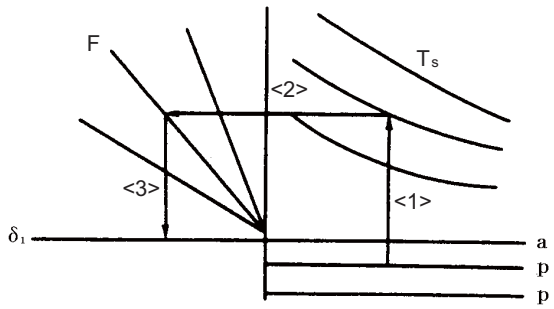

Approach distance δ1 calculation chart (when position loop gain = 33)

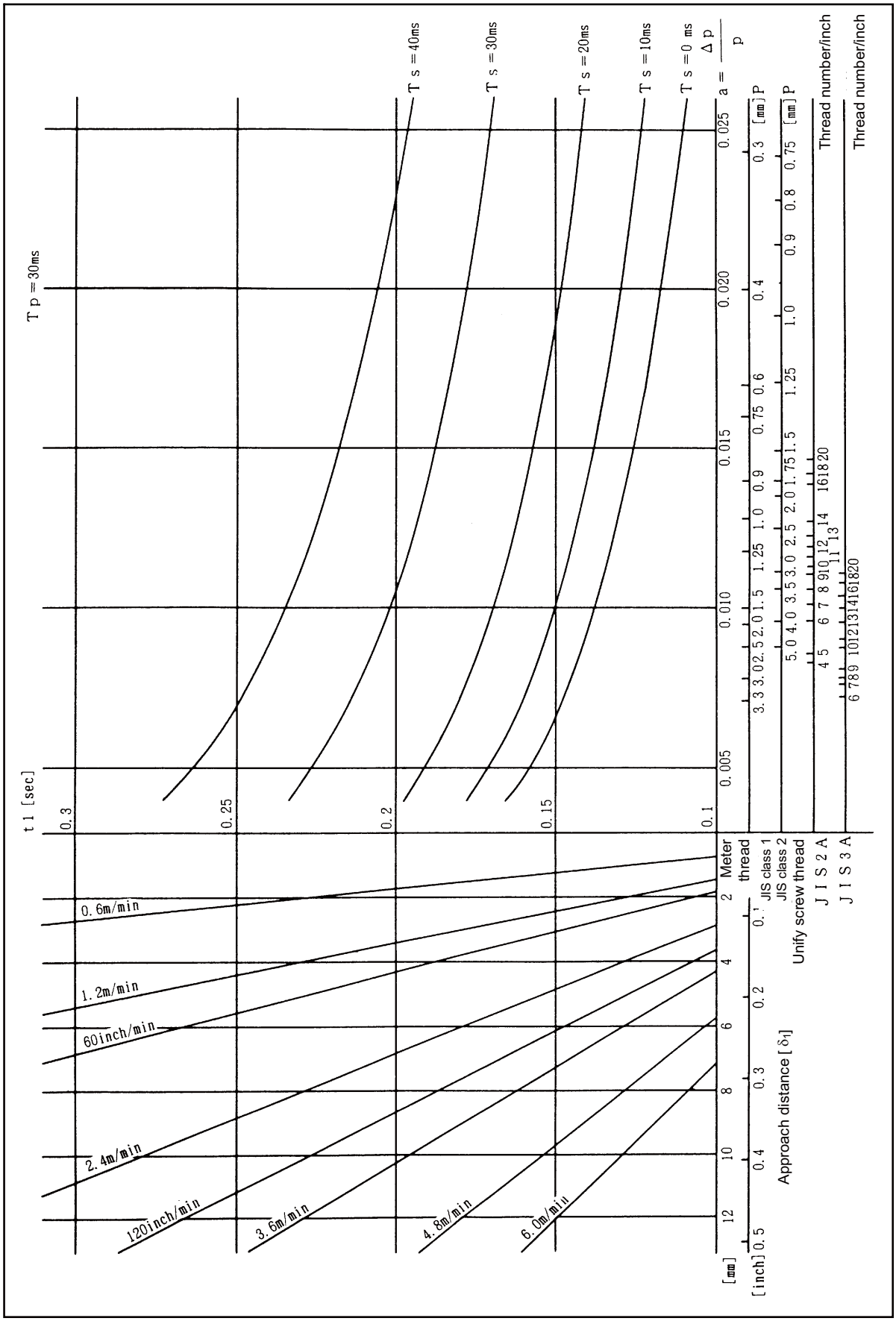

### Length of area where thread is incomplete at retract [δ2]

$$\delta_2 = (T_s + T_p)\frac{F}{60} \text{ (mm)}$$

Where F : Thread cutting speed (mm/min)
Ts : Acceleration/deceleration time constant (s)
Tp : Position loop time constant (s) = 1/ position loop gain (PGN1)
During the SHG control, a position loop gain should be calculated by multiplying √ 2.

**Note**

(1) When proceeding with chamfering during a thread cutting cycle, the length of the area where the thread is incomplete is equivalent to the value produced by adding δ2 determined by the above formula to the chamfering pitch set by parameter.

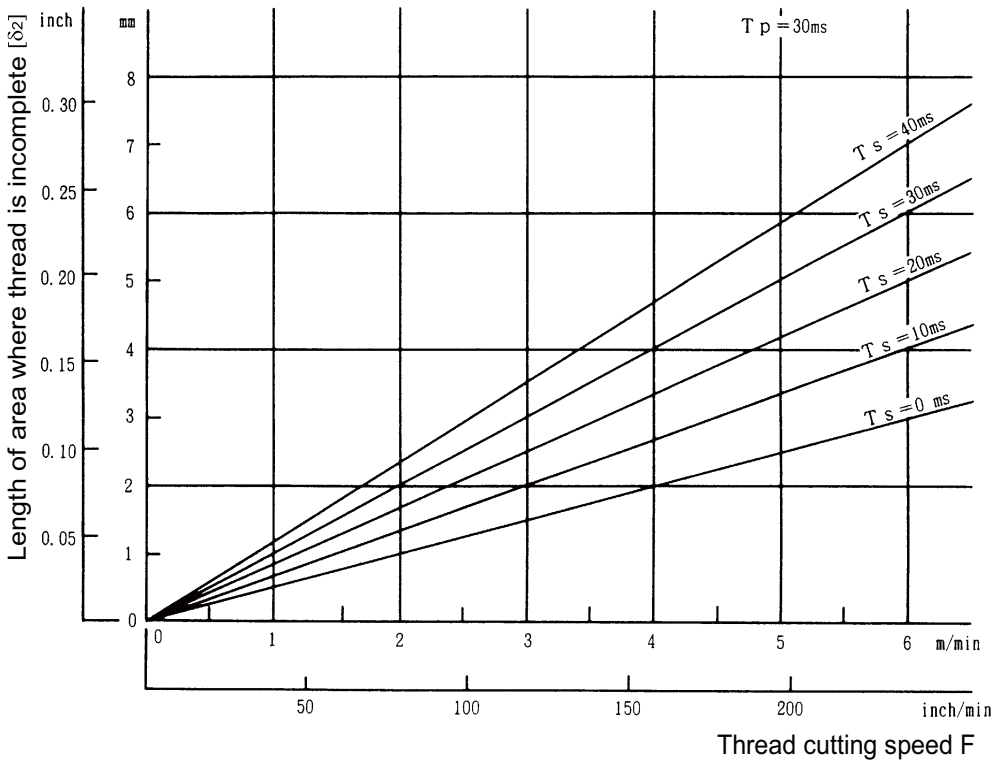


Chart to calculate length of area where thread is incomplete [ δ2 ]

26

# Appx.3: Parameter Input by Program N No. (G10 L50, G11)

## Function and purpose

The parameters set from the setting and display unit can be changed in the machining programs.

### Note

(1) G10 L50 is for specific models only (no specification for M8 Series).

## Command format

### Data setting command

```
G10 L50 ;
P_ N_ H □ _ ;
P_ A_ N_ D_ ;
P_ A_ N_ S_ ;
P_ A_ N_ L_ ;
```

| | |
|---|---|
| P | Major classification No. |
| N | Data No. |
| A | Axis No. |
| H | Bit type data |
| D | Byte type data |
| S | S word type data |
| L | 2 word type data |

### Data setting mode cancel (data setting completed)

```
G11 ;
```

There are 8 types of data formats according to the type of parameter (axis-common and axis-independent) and data type, as listed below..

With axis-common data

| | |
|---|---|
| P__N__H □ __ ; | Bit-type parameter |
| P__N__D__ ; | Byte-type parameter |
| P__N__S__ ; | Word-type parameter |
| P__N__L__ ; | 2-word-type parameter |

With axis-independent data

| | |
|---|---|
| P__A__N__H □ __ ; | Bit-type parameter |
| P__A__N__D__ ; | Byte-type parameter |
| P__A__N__S__ ; | Word-type parameter |
| P__A__N__L__ ; | 2-word-type parameter |

### Note

(1) The sequence of addresses in a block must be as shown above.

(2) For a bit type parameter, the data type will be H □ ( □ is a value between 0 and 7).

(3) The axis No. is set in the following manner: 1st axis is 1, 2nd axis is 2, and so forth.
When using multi-part systems, the 1st axis in each part system is set as 1, the 2nd axis is set as 2, and so forth.

(4) "G10 L50" must be commanded alone in a block, which also applies to "G11". A program error (P33, P421) will occur if it is not commanded alone in a block.

### Detailed description

(1) The units in the table indicate the minimum setting units for the parameter data.

(2) The setting ranges given in the table are the setting ranges on the screen. Designate parameters related to the length by doubling the input setting unit.

(Example 1) If the input setting unit in the metric system is "B" (0.001mm), set 30mm in the parameter.

L60000

(Example 2) If the input setting unit in the inch system is "B" (0.0001inch), set 5inch in the parameter.

L100000

(3) The binary type parameters must be converted into byte type data, and commanded with a decimal data following address D.

(Example 1) Binary data

01010101B = 55H = 85D : Command 85

(Example 2) ASCII code

"M" = 01001101B = 4DH = 77D : Command 77

(B indicates Binary, H indicates Hexadecimal, and D indicates Decimal.)

(4) In a system with a section No. (P) (in case of G10 L50), the section No. is assigned according to the function increment after No. 20. Thus, the No. may be duplicated with the parameters that can be set with other section Nos.

| [Machining parameters] | | | | | | | |
|---|---|---|---|---|---|---|---|
| **#** | **Item** | **P** | **A** | **N** | **Data type** | **Setting range** | **Unit** |
| | | | | | | | |
| 8007 | Override | 11 | - | 1010 | D | 0 - 100 | % |
| 8008 | MAX ANGLE | 11 | - | 756 | L | 0 - 180 | ° |
| 8009 | DSC.ZONE | 11 | - | 760 | L | 0 - 199999998 | 0.5μm |
| 8010 | ABS. MAX. | 11 | - | 776 | L | 0 - 199998 | 0.5μm |
| 8011 | INC. MAX. | 11 | - | 780 | L | 0 - 199998 | 0.5μm |
| | | | | | | | |
| 8013 | G83 n | 11 | - | 832 | L | 0 - 199999998 | 0.5μm |
| 8014 | CDZ-VALE | 11 | - | 1012 | D | 0 - 127 | 0.1 lead |
| 8015 | CDZ-ANGLE | 11 | - | 1011 | D | 0 - 89 | ° |
| 8016 | G71 MINIMUM | 11 | - | 788 | L | 0 - 199998 | 0.5μm |
| 8017 | G71 DELTA-D | 11 | - | 792 | L | 0 - 199998 | 0.5μm |
| | | | | | | | |
| 8051 | G71 THICK | 11 | - | 784 | L | 0 - 199999998 | 0.5μm |
| 8052 | G71 PULL UP | 11 | - | 796 | L | 0 - 199999998 | 0.5μm |
| 8053 | G73 U | 11 | - | 800 | L | ±199999998 | 0.5μm |
| 8054 | G73 W | 11 | - | 804 | L | ±199999998 | 0.5μm |
| 8055 | G73 R | 11 | - | 808 | L | 0 - 99999 | |
| 8056 | G74 RETRACT | 11 | - | 820 | L | 0 - 199998 | 0.5μm |
| 8057 | G76 LAST-D | 11 | - | 824 | L | 0 - 199998 | 0.5μm |
| 8058 | G76 TIMES | 11 | - | 997 | D | 0 - 99 | |
| 8059 | G76 ANGLE | 11 | - | 998 | D | 0 - 99 | |

| [Axis parameters] | | | | | | | |
|---|---|---|---|---|---|---|---|
| **#** | **Item** | **P** | **A** | **N** | **Data type** | **Setting range** | **Unit** |
| | | | | | | | |
| 8202 | OT-CHECK OFF | 2 | No. | 897 | H2 | 0 - 1 | |
| | | | | | | | |
| 8204 | OT-CHECK-N | 2 | No. | 916 | L | ±199999998 | 0.5μm |
| 8205 | OT-CHECK-P | 2 | No. | 912 | L | ±199999998 | 0.5μm |

| [Barrier data] | | | | | | | |
|---|---|---|---|---|---|---|---|
| **#** | **Item** | **P** | **A** | **N** | **Data type** | **Setting range** | **Unit** |
| 8300 | (P0) X | 11 | - | 1128 | L | ±199999998 | 0.5μm |
| 8301 | (P1) X | 11 | No. | 1136 | L | ±199999998 | 0.5μm |
| | Z | 11 | No. | 1160 | L | ±199999998 | 0.5μm |
| 8302 | (P2) X | 11 | No. | 1140 | L | ±199999998 | 0.5μm |
| | Z | 11 | No. | 1164 | L | ±199999998 | 0.5μm |
| 8303 | (P3) X | 11 | No. | 1144 | L | ±199999998 | 0.5μm |
| | Z | 11 | No. | 1168 | L | ±199999998 | 0.5μm |
| 8304 | (P4) X | 11 | No. | 1148 | L | ±199999998 | 0.5μm |
| | Z | 11 | No. | 1172 | L | ±199999998 | 0.5μm |
| 8305 | (P5) X | 11 | No. | 1152 | L | ±199999998 | 0.5μm |
| | Z | 11 | No. | 1176 | L | ±199999998 | 0.5μm |
| 8306 | (P6) X | 11 | No. | 1156 | L | ±199999998 | 0.5μm |
| | Z | 11 | No. | 1180 | L | ±199999998 | 0.5μm |

| [BASE SPEC PARAM] | | | | | | | |
|---|---|---|---|---|---|---|---|
| **#** | **Item** | **P** | **A** | **N** | **Data type** | **Setting range** | **Unit** |
| 1595 | hobm | 11 | - | 595 | D | 1 to the number of spindles | |
| 1596 | hobs | 11 | - | 596 | D | 1 to the number of the axis in the part system | |

| [AXIS SPEC PARAM] | | | | | | | |
|---|---|---|---|---|---|---|---|
| **#** | **Item** | **P** | **A** | **N** | **Data type** | **Setting range** | **Unit** |
| 2592 | Extstnum | 2 | No. | 2592 | S | 4101 - 5508 | |
| 2593 | Extset | 2 | No. | 2593 | D | 0 - 32 | |
| 2594 | Extsc | 2 | No. | 2594 | D | 0 - 99 | |

## Program example

```
G10 L50 ;
P11 N1010 D30 ;     parameter "#8007 OVERRIDE" to "30"
G11 ;
```

27

# Appx.4: Command Value Range Lists

**<Lists of command values and setting value ranges>**

(1) Linear axis: Input unit [mm] (L system)

| Input setting unit | 0.001 | 0.0001 | 0.00001 | 0.000001 |
|---|---|---|---|---|
| Max. stroke (Value in machine coordinate system) | ±99999.999 mm | ±99999.9999 mm | ±99999.99999 mm | ±99999.999999 mm |
| Max. command value | ±99999.999 mm | ±99999.9999 mm | ±99999.99999 mm | ±99999.999999 mm |
| Rapid traverse rate (including the rate at dry running) | 1 to 1000000 mm/min | 1 to 1000000 mm/min | 1 to 1000000 mm/min | 1 to 1000000 mm/min |
| Cutting feedrate (including the rate at dry running) Asynchronous feed (feed per minute) | 0.001 to 1000000.000 mm/min | 0.0001 to 1000000.0000 mm/min | 0.00001 to 1000000.00000 mm/min | 0.000001 to 1000000.000000 mm/min |
| Synchronous feed (feed per revolution) | 0.0001 to 999.9999 mm/rev | 0.00001 to 999.99999 mm/rev | 0.000001 to 999.999999 mm/rev | 0.0000001 to 999.9999999 mm/rev |
| 2nd to 4th reference position offset (Value in machine coordinate system) | ±99999.999 mm | ±99999.9999 mm | ±99999.99999 mm | ±99999.999999 mm |
| Tool compensation amount (Shape) | ±99999.999 mm | ±99999.9999 mm | ±99999.99999 mm | ±99999.999999 mm |
| Tool compensation amount (Wear) | ±99999.999 mm | ±99999.9999 mm | ±99999.99999 mm | ±99999.999999 mm |
| Incremental feed amount | 0.001 mm/pulse | 0.0001 mm/pulse | 0.00001 mm/pulse | 0.000001 mm/pulse |
| Handle feed amount | 0.001 mm/pulse | 0.0001 mm/pulse | 0.00001 mm/pulse | 0.000001 mm/pulse |
| Soft limit range (Value in machine coordinate system) | ±99999.999 mm | ±99999.9999 mm | ±99999.99999 mm | ±99999.999999 mm |
| Dwell time | 0 to 99999.999 s | 0 to 99999.9999 s | 0 to 99999.99999 s | 0 to 99999.999999 s |
| Backlash compensation amount | ±9999999 pulse | ±9999999 pulse | ±9999999 pulse | ±9999999 pulse |
| Pitch error compensation amount | -32768 to 32767 pulse | -32768 to 32767 pulse | -32768 to 32767 pulse | -32768 to 32767 pulse |
| Thread lead (F) | 0.0001 to 999.9999 mm/rev | 0.00001 to 999.99999 mm/rev | 0.000001 to 999.999999 mm/rev | 0.0000001 to 999.9999999 mm/rev |
| Thread lead (Precision E) | 0.00001 to 999.99999 mm/rev | 0.000001 to 999.999999 mm/rev | 0.0000001 to 999.9999999 mm/rev | 0.00000001 to 999.99999999 mm/rev |
| Thread lead (Threads/inch) | 0.03 to 999.99 | 0.026 to 222807.017 | 0.0255 to 224580.0000 | 0.02540 to 224719.00000 |

(2) Linear axis: Input unit [inch] (L system)

| Input setting unit | 0.0001 | 0.00001 | 0.000001 | 0.0000001 |
|---|---|---|---|---|
| Max. stroke (Value in machine coordinate system) | ±9999.9999 inch | ±9999.99999 inch | ±9999.999999 inch | ±9999.9999999 inch |
| Max. command value | ±9999.9999 inch | ±9999.99999 inch | ±9999.999999 inch | ±9999.9999999 inch |
| Rapid traverse rate (including the rate at dry running) | 1 to 100000 inch/min | 1 to 100000 inch/min | 1 to 100000 inch/min | 1 to 100000 inch/min |
| Cutting feedrate (including the rate at dry running) Asynchronous feed (feed per minute) | 0.0001 to 100000.0000 inch/min | 0.00001 to 100000.00000 inch/min | 0.000001 to 100000.000000 inch/min | 0.0000001 to 100000.0000000 inch/min |
| Synchronous feed (feed per revolution) | 0.00001 to 99.99999 inch/rev | 0.000001 to 99.999999 inch/rev | 0.0000001 to 99.9999999 inch/rev | 0.00000001 to 99.99999999 inch/rev |
| 2nd to 4th reference position offset (Value in machine coordinate system) | ±9999.9999 inch | ±9999.99999 inch | ±9999.999999 inch | ±9999.9999999 inch |
| Tool compensation amount (Shape) | ±9999.9999 inch | ±9999.99999 inch | ±9999.999999 inch | ±9999.9999999 inch |
| Tool compensation amount (Wear) | ±9999.9999 inch | ±9999.99999 inch | ±9999.999999 inch | ±9999.9999999 inch |
| Incremental feed amount | 0.0001 inch/pulse | 0.00001 inch/pulse | 0.000001 inch/pulse | 0.0000001 inch/pulse |
| Handle feed amount | 0.0001 inch/pulse | 0.00001 inch/pulse | 0.000001 inch/pulse | 0.0000001 inch/pulse |
| Soft limit range (Value in machine coordinate system) | ±9999.9999 inch | ±9999.99999 inch | ±9999.999999 inch | ±9999.9999999 inch |
| Dwell time | 0 to 99999.999 s | 0 to 99999.9999 s | 0 to 99999.99999 s | 0 to 99999.999999 s |
| Backlash compensation amount | ±9999999 pulse | ±9999999 pulse | ±9999999 pulse | ±9999999 pulse |
| Pitch error compensation amount | -32768 to 32767 pulse | -32768 to 32767 pulse | -32768 to 32767 pulse | -32768 to 32767 pulse |
| Thread lead (F) | 0.00001 to 39.37007inch/rev | 0.000001 to 39.370078inch/rev | 0.0000001 to 39.3700787inch/rev | 0.00000001 to 39.37007873inch/rev |
| Thread lead (Precision E) | 0.000001 to 39.370078 inch/rev | 0.0000001 to 39.3700787 inch/rev | 0.00000001 to 39.37007873 inch/rev | 0.000000001 to 39.370078736 inch/rev |
| Thread lead (Threads/inch) | 0.025 to 9999.999 | 0.0254 to 9999.9999 | 0.02540 to 9999.99999 | 0.025400 to 9999.999999 |

(3) Rotary axis: Degree [°] (L system)

| Input setting unit | 0.001 | 0.0001 | 0.00001 | 0.000001 |
|---|---|---|---|---|
| Max. stroke (Value in machine coordinate system) | ±99999.999 ° | ±99999.9999 ° | ±99999.99999 ° | ±99999.999999 ° |
| Max. command value | ±99999.999 ° | ±99999.9999 ° | ±99999.99999 ° | ±99999.999999 ° |
| Rapid traverse rate (including the rate at dry running) | 1 to 1000000 °/min | 1 to 1000000 °/min | 1 to 1000000 °/min | 1 to 1000000 °/min |
| Cutting feedrate (including the rate at dry running) Asynchronous feed (feed per minute) | 0.001 to 1000000.000 °/min | 0.0001 to 1000000.0000 °/min | 0.00001 to 1000000.00000 °/min | 0.000001 to 1000000.000000 °/min |
| Synchronous feed (feed per revolution) | 0.0001 to 999.9999 °/rev | 0.00001 to 999.99999 °/rev | 0.000001 to 999.999999 °/rev | 0.0000001 to 999.9999999 °/rev |
| 2nd to 4th reference position offset (Value in machine coordinate system) | ±99999.999 ° | ±99999.9999 ° | ±99999.99999 ° | ±99999.999999 ° |
| Incremental feed amount | 0.001 °/pulse | 0.0001 °/pulse | 0.00001 °/pulse | 0.000001 °/pulse |
| Handle feed amount | 0.001 °/pulse | 0.0001 °/pulse | 0.00001 °/pulse | 0.000001 °/pulse |
| Soft limit range (Value in machine coordinate system) | ±99999.999 ° | ±99999.9999 ° | ±99999.99999 ° | ±99999.999999 ° |
| Backlash compensation amount | ±9999999 pulse | ±9999999 pulse | ±9999999 pulse | ±9999999 pulse |
| Pitch error compensation amount | -32768 to 32767 pulse | -32768 to 32767 pulse | -32768 to 32767 pulse | -32768 to 32767 pulse |

# Index

Refer to Programming Manual (Lathe System) (1/2) for Chapter 14 and previous chapters (page 580 and before).

Refer to Programming Manual (Lathe System) (2/2) for Chapter 15 and succeeding chapters (page 581 and later).

## Symbols


/ ..... 19
/n ..... 21


## Numerics


2nd Miscellaneous Functions (A8-digits, B8-digits or C8-digits) ..... 260
2nd, 3rd, and 4th Reference Position (Zero point) Return .... 1110
3-dimensional Coordinate Conversion ..... 1070


## A


Absolute command/Incremental command ..... 34
Acceleration/Deceleration Mode Change in The Fixed Cycle for Drilling ..... 485
Allocation of the Number of Tool Life Management Sets to Part Systems ..... 630
Arbitrary Axis Exchange ..... 727
Arbitrary Axis Superimposition ..... 772
ASCII Code Macro ..... 543
Automatic Acceleration/Deceleration after Interpolation .... 188
Automatic Coordinate System Setting ..... 1050
Automatic Corner Override ..... 238, 243
Automatic Tool Length Measurement ..... 1132
Axis Name Extension ..... 653
Axis Name Switch ..... 632


## B


Balance Cut ..... 717
Basic Machine Coordinate System Selection ..... 1054
Basic Machine, Workpiece and Local Coordinate Systems ... 1048
Boring Cycle ..... 505, 506


## C


Chuck Barrier/Tailstock Barrier ..... 1118
Circular Interpolation ..... 57
Circular Thread Cutting ..... 78
Command Value Range Lists ..... 1244
Common Variables ..... 550
Compensation Data Input by Program (Tool Compensation Amount) ..... 619
Compensation Data Input by Program (Workpiece Offset Amount) ..... 621
Compound Type Fixed Cycle for Turning Machining .... 389
Compound Type Fixed Cycle for Turning Machining (MITSUBISHI CNC Special Format) ..... 435
Compound Type Thread Cutting Cycle ..... 420
Constant Lead Thread Cutting ..... 68
Constant Surface Speed Control ..... 269
Continuous Thread Cutting ..... 75
Control Axis Superimposition ..... 749
Control Axis Synchronization between Part Systems .... 789
Control Commands ..... 559
Coordinate Rotation by Program ..... 1092
Coordinate System for Rotary Axis ..... 1051
Coordinate System Setting ..... 1057
Coordinate Systems and Coordinate Zero Point Symbols .... 4
Coordinate Words and Control Axes ..... 2, 1046
Corner Chamfering Expansion/Corner Rounding Expansion ..... 586, 594
Corner Chamfering I ..... 582
Corner Chamfering I /Corner Rounding I ..... 582
Corner Chamfering II ..... 589
Corner Chamfering II / Corner Rounding II ..... 589
Corner Rounding I ..... 584
Corner Rounding II ..... 592
Cross Axis Control ..... 722
Cutting Feed Constant-gradient Acceleration/Deceleration .... 199
Cutting Feedrate ..... 177
Cutting Mode ..... 245
Cutting Speed Clamp with Acceleration Rate Judgment .... 897
Cylindrical Interpolation ..... 146


## D


Deceleration Check ..... 213
Deceleration Check when Movement in The Opposite Direction Is Reversed ..... 221
Decimal Point Input ..... 44
Deep Hole Drilling Cycle ..... 492
Deep Hole Drilling Cycle 2 ..... 466
Detailed Description for Macro Call Instruction ..... 537
Details of Inclined Surface Machining Operation ..... 1000
Diameter/Radius Designation ..... 36
Diameter/Radius designation switch ..... 37
Drilling Cycle High-Speed Retract ..... 483
Drilling Cycle, Counter Boring Cycle ..... 491
Drilling Cycle, Spot Drilling Cycle ..... 490
Dwell (Revolution-based designation) ..... 251
Dwell (Time-based designation) ..... 248
Dwell/Miscellaneous Function Time Override ..... 807


## E


Enable Interfering Object Selection Data ..... 1127
Exact Stop Check ..... 208
Exact Stop Check Mode ..... 212
Expanded Method of Starting Tool Compensation ..... 317
Exponential Interpolation ..... 164
External Output Commands ..... 565


## F


F1-Digit Feed ..... 178
Face Boring Cycle (Longitudinal boring cycle) ..... 464
Face Cut-off Cycle ..... 416
Face Cutting Cycle ..... 384
Face Deep Hole Drilling Cycle 1 (Longitudinal deep hole drilling cycle 1) ..... 444
Face Rough Cutting Cycle ..... 408
Face Tapping Cycle (Longitudinal tapping cycle) / Face Reverse Tapping Cycle (Longitudinal reverse tapping cycle) ..... 446
Feed Functions ..... 118
Feed Per Minute/Feed Per Revolution (Asynchronous Feed/Synchronous Feed) ..... 180
Feedrate Designation and Effects on Control Axes ..... 182
File Format ..... 16
Finishing Cycle ..... 414
Fixed Cycle for Drilling ..... 441
Fixed Cycle for Drilling (MITSUBISHI CNC special format) .... 487
Fixed Cycle for Drilling Cancel ..... 479
Fixed Cycle for Turning Machining ..... 376
Fixed Cycles ..... 1226
Fixed Cycles for Turning Machining (MITSUBISHI CNC Special Format) ..... 387
Formed Material Rough Cutting Cycle ..... 410

G


G Code Lists ..... 23
G Code Macro Call ..... 533
G0.5 ..... 226
G0.5 P1 ..... 224
G00 ..... 52
G00 Feedrate Command (,F command) ..... 173
G01 ..... 55
G01 A_ ..... 596
G01 A_ , G02/G03 P_Q_H_ ..... 603
G01 A_ , G02/G03 R_H_ ..... 607
G01 X_ Z_ ,C_/I_/K_/C_ ..... 582
G01 X_ Z_ ,R_/R_ ..... 584
G01 X_/Z_ A_/,A_ ..... 595
G01/G02/G03 X_ Z_ ,C_/I_/K_/C_ ..... 589
G01/G02/G03 X_ Z_ ,R_/R_ ..... 592
G02, G03 ..... 57, 98
G02,G03 ..... 63
G02.3,G03.3 ..... 164
G02/G03 P_Q_ /R_ ..... 599
G04 ..... 248, 251
G05 P1, G05 P2 ..... 846
G05.1 Q1/Q0,G05 P10000/P0 ..... 886
G07.1 ..... 146
G08.5 ..... 685
G09 ..... 208
G10 L10 P0 ..... 1063
G10 L10/L11, G11 ..... 619
G10 L101, G11 ..... 623
G10 L14 ..... 1154
G10 L2/L20, G11 ..... 621
G10 L3, G11 ..... 628
G10 L70 ,G11 ..... 617
G10.9 ..... 37
G110 ..... 722
G111 ..... 632
G114.1 ..... 907
G114.2, G113 ..... 928
G114.3/G113 ..... 946
G115 ..... 704
G116 ..... 707
G117 ..... 266
G12.1 ..... 103
G12.1,G13.1/G112,G113 (Only 6, 7 in G code list) ..... 157
G120.1, G121 ..... 901
G122 ..... 813
G125 ..... 789
G126 ..... 749
G127 ..... 611
G13.1 ..... 117
G140, G141, G142 ..... 727
G144 ..... 830
G15,G14 ..... 717
G156 ..... 772
G160 ..... 1150
G162/G163 ..... 302
G164, G113/G113.1 ..... 964
G17, G18, G19 ..... 66
G17,G19,G16 ..... 108
G174 ..... 1030
G176 ..... 1026
G180 ..... 649
G185 ..... 472, 507
G186 ..... 1127
G187 ..... 468
G188/G189 ..... 659
G20, G21 ..... 42
G22,G23 ..... 1118, 1122
G26 ..... 670
G27 ..... 1116
G28,G29 ..... 1106
G30 ..... 1110
G30.1 - G30.5 ..... 1113
G31 ..... 1136
G31 Fn ..... 1146
G31 P ..... 1144
G31.n, G04 ..... 1142
G33 ..... 68, 73, 75
G34 ..... 76
G35,G36 ..... 78
G37 ..... 1132
G40, G41, G42, G46 ..... 332
G41/G42 Commands and I, J, K Designation ..... 361
G43.1,G44.1,G47.1 ..... 287
G51.2/G50.2 or G251/G250 (only 6 and 7 in G code list) .... 942
G51.2/G50.2 or G251/G250 (only 6, 7 in G code list) .... 935
G52 ..... 1059
G53 ..... 1054
G53.1 ..... 1037
G54 to G59, G54.1 ..... 1060
G61 ..... 212
G61.1,G08 ..... 855
G62 ..... 243
G63 ..... 244
G64 ..... 245
G65 ..... 525
G66 ..... 529
G66.1 ..... 531
G68,G69 ..... 639
G68.1/G69.1 ..... 1070, 1092
G68.2/G69.1 ..... 996
G70 ..... 414
G71 ..... 390
G71, G73, G74, G76 ..... 435
G72 ..... 408
G73 ..... 410
G74 ..... 416
G75 ..... 418
G76 ..... 420, 797
G76.1 ..... 798
G76.1, G76.2 ..... 804
G76.2 ..... 801
G77 ..... 377
G77, G78, G79 ..... 387
G78 ..... 380
G79 ..... 384
G80 ..... 479
G81 ..... 490
G82 ..... 491
G83 ..... 492
G83 (G87) ..... 444
G83.1 ..... 494
G83.2 ..... 466
G84 ..... 496
G84 (G88) / G84.1 (G88.1) ..... 446
G84.2 ..... 500
G85 ..... 505
G85 (G89) ..... 464
G89 ..... 506
G90,G91 ..... 34
G92 ..... 283, 1057
G92.1 ..... 1065
G94,G95 ..... 180
G96,G97 ..... 269

G98,G99 ..... 481
General Precautions for Nose R Compensation ..... 367
Geometric I ..... 596
Geometric IB ..... 598
Geometric IB (Automatic calculation of contact point between line and circular arc) ..... 607
Geometric IB (Automatic calculation of contact point of two circular arcs) ..... 599
Geometric IB (Automatic calculation of intersection point between line and circular arc) ..... 603

H

Handling the Macro Call Command [C80] ..... 539
Helical Interpolation ..... 98
High-accuracy Control ..... 855
High-speed High-accuracy Control ..... 886
High-speed High-accuracy Control I, II ..... 886
High-speed Machining Mode I, II ..... 846
High-speed Mode Corner Deceleration ..... 898
Hole Edge Chamfering Cycle ..... 472, 507
How to Define Feature Coordinate System Using Roll-Pitch-Yaw Angles ..... 998

I

Inch Thread Cutting ..... 73
Inch/Metric Conversion ..... 42
Inclined Surface Machining ..... 996
Index Table Indexing ..... 261
Indexing Increment ..... 9
Initial High-accuracy Control ..... 883
Initial Point and R Point Level Return ..... 481
Input Setting Unit and Program Command Unit ..... 8
Interactive Cycle Insertion ..... 649
Interactive Macro ..... 652
Interference Check ..... 136, 368
Interrupt during Corner Chamfering/Interrupt during Corner Rounding ..... 588, 594
Interrupts during Nose R Compensation ..... 365

L

Linear Angle Command ..... 595
Linear Interpolation ..... 55
Local Coordinate System Setting ..... 1059
Local Variables (#1 to #33) ..... 551
Longitudinal Cut-off Cycle ..... 418
Longitudinal Cutting Cycle ..... 377
Longitudinal Rough Cutting Cycle ..... 390

M

M Code Output during Axis Traveling ..... 266
M*** ..... 710
M198 ..... 518
M96, M97 ..... 571
M98, M99 ..... 512
Machine Zero Point and 2nd Reference Position (Zero point) ..... 1049
Machining Condition Selection I ..... 901
Machining Interruption [C80] ..... 670
Macro Call Instructions ..... 525
Macro Interruption ..... 571
Manual Arbitrary Reverse Run Prohibition ..... 611
Material Shape Input by Program ..... 623
Milling Interpolation ..... 103
Milling Interpolation Control and Command Axes ..... 106
Mirror Image for Facing Tool Posts ..... 639
Miscellaneous Command Macro Call (for M, S, T, B Code Macro Call) ..... 535
Miscellaneous Functions (M8-Digits) ..... 256
Modal Call A (Movement Command Call) ..... 529
Modal Call B (for Each Block) ..... 531
Modal, Unmodal ..... 23
Multi-part System Simultaneous High-accuracy ..... 884
Multi-part System Simultaneous Thread Cutting Cycle ..... 797
Multi-part System Simultaneous Thread Cutting Cycle (MITSUBISHI CNC Special Format) ..... 804
Multi-part System Simultaneous Thread Cutting Cycle I ..... 798
Multi-part System Simultaneous Thread Cutting Parameter Setting Command ..... 797
Multiple Spindle Synchronization Set Control ..... 980
Multiple-spindle Control ..... 285
Multiple-spindle Control I (Spindle Control Command) ..... 286
Multiple-spindle Control I (Spindle Selection Command) ..... 287
Multi-step Skip Function 1 ..... 1142
Multi-step Skip Function 2 ..... 1144

N

Nose R Compensation Operations ..... 337
Number of Tool Offset Sets Allocation to Part Systems ..... 320

O

Operation Commands ..... 554
Optional Block Skip ..... 19
Optional Block Skip Addition ..... 21
Other Operations during Nose R Compensation ..... 354

P

Parameter Input by Program ..... 617
Parameter Input by Program N No. (G10 L50, G11) ..... 1240
Plane Selection ..... 66
Polar coordinate interpolation ..... 157
POPEN, PCLOS, DPRNT ..... 565
Positioning (Rapid Traverse) ..... 52
Precautions ..... 569
Precautions before Starting Machining ..... 30
Precautions for Compound Type Fixed Cycle for Turning Machining (G70 to G76) ..... 432
Precautions for Inclined Surface Machining ..... 1011
Precautions for Using Spindle Synchronization Control ..... 920
Precautions on High-speed High-accuracy Control ..... 899
Precautions on Using The Fixed Cycle for Drilling (MITSUBISHI CNC Special Format) ..... 508
Precautions When Using a Fixed Cycle for Drilling ..... 480
Preparatory Function ..... 112
Pre-read Buffer ..... 32
Program Format ..... 12
Program format switch ..... 659
Programmable Current Limitation ..... 1154

R

R Specification Circular Interpolation ..... 63
Rapid Traverse Block Overlap ..... 224
Rapid Traverse Block Overlap for G00 ..... 226
Rapid Traverse Block Overlap for G28 ..... 236
Rapid Traverse Constant-gradient Acceleration/ Deceleration ..... 193
Rapid Traverse Rate ..... 172
Reference Position (Zero point) Return ..... 1106
Reference Position Check ..... 1116
Relationship between Inclined Surface Machining and Other Functions ..... 1002
Relationship between Milling Interpolation and Other Functions ..... 144
Rotary Axis Reference Position Selection ..... 1001
Rotation center error compensation ..... 1039

S

S○= ..... 286

Select Finished Shape Program Search Method ..... 425
Selecting a Plane during the Milling Mode ..... 108
Selecting Milling Mode ..... 105
Setting Milling Coordinate System ..... 110
Setting of Workpiece Coordinates in Fixed Cycle Mode .... 482
Simple Inclined Surface Control ..... 1026
Simple Inclined Surface Machining ..... 1012
Simple Macro Calls ..... 525
Simple Tool Center Point Control ..... 1030
Skip Function ..... 1136
Speed Change Skip ..... 1146
Speed Clamp ..... 207
Spindle Clamp Speed Setting ..... 283
Spindle Functions ..... 268
Spindle Position Control (Spindle/C Axis Control) ..... 293
Spindle Position Control (Spindle/C Axis Control) under Spindle Synchronization Control ..... 922
Spindle Speed Fluctuation Detection ..... 302
Spindle Superimposition ..... 964
Spindle Synchronization ..... 906
Spindle Synchronization I ..... 907
SSS Control ..... 875
Stepping Cycle ..... 494
Stored Stroke Limit ..... 1122
Stroke Check before Travel in Stored Stroke Limit Area (only 6 and 7 in G code list) ..... 1124
Sub Part System Control I ..... 813
Sub Part System Control II ..... 830
Subprogram Call ..... 512, 518
Supplementary Explanation for Incomplete Thread Area of Thread Control ..... 1234
Switching from Milling Mode to Turning Mode ..... 117
Synchronization between Part Systems OFF ..... 811
Synchronous Tapping Cycle ..... 500
System Variables ..... 553
System Variables (Alarm) ..... 1183
System Variables (Cumulative Time) ..... 1185
System Variables (Extended Workpiece Coordinate Offset) ..... 1179
System Variables (External Workpiece Coordinate Offset / Workpiece Coordinate System Shift) ..... 1180
System Variables (G Command Modal) ..... 1160
System Variables (Interfering Object Selection) ..... 1217
System Variables (Machining Information) ..... 1188
System Variables (Macro Interface Input (PLC -> NC)) .... 1195
System Variables (Macro Interface Output (NC -> PLC)) .... 1201
System Variables (Message Display and Stop) ..... 1184
System Variables (Mirror Image) ..... 1189
System Variables (Modal Information at Macro Interruption) .... 1162
System Variables (NC Data Reading/Writing with API Section and Sub-section Nos. Input/Output by Program) ..... 1222
System Variables (Non-G Command Modal) ..... 1161
System Variables (Number of Workpiece Machining Times) ..... 1189
System Variables (Parameter Reading) ..... 1191
System Variables (PLC Data Reading) ..... 1213
System Variables (Position Information) ..... 1181
System Variables (R Device Access Variables) ..... 1207
System Variables (Rotary Axis Configuration Parameter) .... 1190
System Variables (Time Read Variables) ..... 1186
System Variables (Tool Information) ..... 1164
System Variables (Tool Life Management) ..... 1174
System Variables (Tool Offset) ..... 1172
System Variables (Workpiece Coordinate Offset) ..... 1178
System Variables (ZR Device Access Variables) [C80] .... 1220
System Variables for Program Format Switch ..... 1158
System Variables List ..... 1156

T

T Code Mirror Image for Facing Tool Posts ..... 311
T****99, T****88 ..... 626
Table of G Code Lists ..... 24
Tapping Cycle ..... 496
Tapping Mode ..... 244
Thread Cutting ..... 68
Thread Cutting Cycle ..... 380
Thread Cutting Feed Forward ..... 95
Thread Cutting Mode ..... 187
Thread Cutting Override ..... 82
Thread Cutting Start Shift Angle Operation Switching ..... 93
Thread Cutting Time Constant ..... 91
Thread Milling Cycle ..... 468
Timing Synchronization Operation ..... 700
Timing Synchronization Operation (! code) !n (!m ...) L .... 700
Timing Synchronization Operation Function Using M codes ... 710
Timing Synchronization Operation with Start Point Designated (Type 1) ..... 704
Timing Synchronization Operation with Start Point Designated (Type 2) ..... 707
Timing Synchronization When Timing Synchronization Ignore Is Set ..... 714
Tolerance Control ..... 879
Tool Axis Direction Control ..... 1037
Tool Change Position Return ..... 1113
Tool Compensation ..... 314
Tool Compensation for 2nd Additional Axis ..... 325
Tool Compensation for Additional Axes ..... 322
Tool Compensation Start ..... 315
Tool Functions (T8-digit BCD) ..... 310
Tool Length Compensation ..... 119, 329
Tool Life Management Data Input ..... 628
Tool Life Management II ..... 626
Tool Nose Point and Compensation Direction ..... 334
Tool Nose Radius Compensation ..... 332
Tool Nose Wear Compensation ..... 331
Tool Radius Compensation ..... 121
Tool Radius Compensation Operation ..... 122
Tool Shape Compensation for Turning ..... 428
Tool Spindle Synchronization IA (Spindle-Spindle, Polygon) ..... 928
Tool Spindle Synchronization IB (Spindle-Spindle, Polygon) ..... 935
Tool Spindle Synchronization IC (Spindle-NC Axis, Polygon) ..... 942
Tool Spindle Synchronization II (Hobbing) ..... 946
Torque Limitation Skip ..... 1150
Two-part System Simultaneous Thread Cutting Cycle II .... 801

U

User Macro ..... 524
User Macro Commands ..... 554

V

Variable Commands ..... 519
Variable Feed Thread Cutting ..... 85
Variable Lead Thread Cutting ..... 76
Variables Used in User Macros ..... 548
Vibration Cutting Control (VCC) ..... 685

W

Workpiece Coordinate System Preset ..... 1065
Workpiece Coordinate System Selection and Extended Workpiece Coordinate System Selection ..... 1060
Workpiece Coordinate System Shift ..... 1063

# Revision History

| Date of revision | Manual No. | Revision details |
|---|---|---|
| Apr. 2015 | IB(NA)1501275-A<br>IB(NA)1501276-A | First edition created. |
| Sep. 2015 | IB(NA)1501275-B<br>IB(NA)1501276-B | The descriptions were revised in response to S/W version A4 of Mitsubishi Electric CNC M800 Series/M80 Series.<br>The following chapters were added.<br>•6.6.6 Thread Cutting Override<br>•6.6.7 Variable Feed Thread Cutting<br>•7.15.2 Inner Arc Override<br>•15.7.3 Tool/Material Shape Input by Program; G10 L100/L101, G11<br><br>The following chapters were revised.<br>•3.4 G Codes<br>•5.4 Decimal Point Input<br>•7.3 F1-digit Feed<br>•7.13 Deceleration Check<br>•7.15 Automatic Corner Override<br>•10.4 Multiple-spindle Control<br>•13.5 Fixed Cycle for Drilling<br>•14.4 Macro Call Instructions<br>•15.7.2 Compensation Data Input by Program; G10 L2/L10/L11, G11<br>•16.4.2 Arbitrary Axis Superimposition; G156<br>•16.9 Sub Part System Control<br>•17.1 High-speed Machining Mode<br>•17.2 High-accuracy Control<br>•17.3 High-speed High-accuracy Control<br>•18.1 Spindle Synchronization<br>•18.2 Tool Spindle Synchronization I<br>•18.4 Spindle Superimposition; G164, G113<br>•19.3 Basic Machine Coordinate System Selection; G53<br>•19.6 Workpiece Coordinate System Setting and Offset; G54 to G59 (G54.1)<br><br>The following chapters were moved.<br>•Parameter Input by Program; G10 L70/L100, G11 (15.6 -> 15.7.1)<br>•Compensation Data Input by Program; G10 L2/L10/L11, G11 (12.6 -> 15.7.2)<br>•Tool Life Management II; G10 L3, G11 (12.7 -> 15.8)<br><br>Other contents were added/revised/deleted according to the specifications. |
| Apr. 2016 | IB(NA)1501275-C<br>IB(NA)1501276-C | The descriptions were revised in response to S/W version B2 of Mitsubishi Electric CNC M800 Series/M80 Series.<br>The following chapters were added.<br>•12.1.5 Tool Compensation for 2nd Additional Axis<br>•18.5 Multiple Spindle Synchronization Set Control<br>•19. Advanced Machining Control<br>•19.1 Simple Inclined Surface Machining<br>•23. System Variables<br><br>(Continue to the next page) |

| Date of revision | Manual No. | Revision details |
|---|---|---|
| | | (Continued from the previous page)<br><br>The following chapters were revised.<br>•Introduction<br>•3.4 G Codes<br>•5.4 Decimal Point Input<br>•6.3 Circular Interpolation; G02/G03<br>•6.4 R Specification Circular Interpolation; G02, G03<br>•6.6 Thread Cutting<br>•6.7 Helical Interpolation; G17, G18, G19, and G02, G03<br>•7.3 F1-digit Feed<br>•7.8 Rapid Traverse Constant Inclination Acceleration/Deceleration<br>•7.14 Rapid Traverse Block Overlap; G0.5 P1<br>•9.3 Index Table Indexing<br>•10.4 Multiple-spindle Control<br>•10.5 Spindle Position Control (Spindle/C Axis Control)<br>•12.1 Tool Compensation<br>•13.5 Fixed Cycle for Drilling<br>•14.1 Subprogram Control; M98, M99, M198<br>•14.2 Variable Commands<br>•14.4 Macro Call Instructions<br>•14.6 User Macro Commands<br>•15.5 Geometric IB<br>•15.6 Manual Arbitrary Reverse Run Prohibition; G127<br>•15.7 Data Input by Program<br>•16.3 Mixed Control<br>•16.4 Control Axis Superimposition<br>•16.6 Multi-part System Simultaneous Thread Cutting Cycle<br>•16.7 Multi-part System Simultaneous Thread Cutting Cycle (MITSUBISHI CNC Special Format); G76.1, G76.2<br>•16.9 Sub Part System Control<br>•17.1 High-speed Machining Mode<br>•17.2 High-accuracy Control<br>•17.3 High-speed High-accuracy Control<br>•18.1 Spindle Synchronization<br>•18.2 Tool Spindle Synchronization I<br>•18.3 Tool Spindle Synchronization II<br>•18.4 Spindle Superimposition; G164, G113<br>•20.6 Workpiece Coordinate System Setting and Offset; G54 to G59 (G54.1)<br>•22.2 Skip Function; G31<br><br>Other mistakes were corrected. |
| Sep. 2016 | IB(NA)1501275-D<br>IB(NA)1501276-D | The descriptions were revised in response to S/W version C1 of Mitsubishi Electric CNC M800 Series/M80 Series.<br>The descriptions were revised in response to S/W version A1 of Mitsubishi Electric CNC C80 Series.<br>The following chapters were added.<br>•6.6.9 Thread Cutting Start Shift Angle Operation Switching<br>•6.6.10 Thread Cutting Feed Forward<br>•21.3 Enable Interfering Object Selection Data; G186<br>•23.24 System Variables (Interfering Object Selection)<br>•23.25 System Variables (ZR Device Access Variables) [C80]<br><br>The following chapters were revised.<br>•Introduction<br>•Precautions for Safety<br>•3.2 File Format<br>•3.4 G Codes<br>•6.8 Milling Interpolation; G12.1<br><br>(Continue to the next page) |

| Date of revision | Manual No. | Revision details |
|---|---|---|
| | | (Continued from the previous page)<br>•6.9 Cylindrical Interpolation; G07.1 (Only 6 and 7 in G Code List)<br>•6.10 Polar Coordinate Interpolation; G12.1,G13.1/G112,G113 (Only 6 and 7 in G Code List)<br>•7.4 Feed Per Minute/Feed Per Revolution (Asynchronous Feed/Synchronous Feed); G94, G95<br>•13.1 Fixed Cycle for Turning Machining<br>•13.2 Fixed Cycles for Turning Machining (MITSUBISHI CNC special format); G77, G78, G79<br>•13.5 Fixed Cycle for Drilling<br>•14.1 Subprogram Control; M98, M99, M198<br>•14.6 User Macro Commands<br>•15.7.1 Parameter Input by Program; G10 L70, G11<br>•16.3 Mixed Control<br>•16.9 Sub Part System Control<br>•17.1 High-speed Machining Mode<br>•17.3 High-speed High-accuracy Control<br>•18.5 Multiple Spindle Synchronization Set Control<br>•19.1 Simple Inclined Surface Machining<br>•20.8 Workpiece Coordinate System Preset; G92.1<br>•22.6 Torque Limitation Skip; G160<br>•23.1 System Variable List<br>•23.5 System Variables (Tool Information)<br>•23.15 System Variables (Time Read Variables)<br>•23.22 System Variables (R Device Access Variables)<br><br>Other mistakes were corrected. |
| Mar. 2017 | IB(NA)1501275-E<br>IB(NA)1501276-E | The descriptions were revised in response to S/W version C3 of Mitsubishi Electric CNC M800 Series/M80 Series.<br>The following chapters were added.<br>•10.6 Spindle Speed Fluctuation Detection; G162/G163<br>•13.5.5 Thread Milling Cycle; G187<br>•15.11 Interactive Cycle Insertion; G180<br>•15.12 Axis Name Extension<br>•15.13 Program format switch;G188/G189<br>•19.1.3 Tool Axis Direction Control ; G53.1<br>•23.1.1 System Variable for Program Format Switch<br>•27 Appendix 4: Command Value Range Lists<br><br>The following chapters were revised.<br>•Introduction<br>•3.1 Program Format<br>•3.4 G Codes<br>•5.4 Decimal Point Input<br>•6.9 Cylindrical Interpolation ; G07.1<br>•7.15 Automatic Corner Override<br>•10.1 Spindle Functions<br>•10.4 Multiple-spindle Control<br>•13.5 Fixed Cycle for Drilling<br>•13.6 Fixed Cycle for Drilling (MITSUBISHI CNC special format)<br>•14.6 User Macro Commands<br>•14.7 Macro Interruption; M96, M97<br>•15.6 Manual Arbitrary Reverse Run Prohibition ; G127<br>•15.8 Tool Life Management II ; G10 L3, G11<br>•16.3.2 Arbitrary Axis Exchange ; G140, G141, G142<br>•17.1 High-speed Machining Mode<br>•17.3 High-speed High-accuracy Control<br>•18.1 Spindle Synchronization<br>•19.1 Simple Inclined Surface Machining<br>(Continue to the next page) |

| Date of revision | Manual No. | Revision details |
|---|---|---|
| | | (Continued from the previous page)<br><br>The following chapters were removed.<br>•7.15.2 Inner Arc Override<br><br>Other mistakes were corrected. |
| Aug. 2017 | IB(NA)1501275-F<br>IB(NA)1501276-F | The descriptions were revised in response to S/W version A2 of Mitsubishi Electric CNC C80 Series.<br>The following chapters were revised.<br>•10.5 Spindle Position Control (Spindle/C Axis Control)<br>•14.1 Subprogram Control; M98, M99, M198<br>•17.2.5 Multi-part System Simultaneous High-accuracy<br>•18.1.3 Spindle Position Control under Spindle Synchronization Control<br>•20.3 Basic Machine Coordinate System Selection ; G53<br>•23.25 System Variables (ZR Device Access Variables) [C80]<br><br>Other mistakes were corrected. |
| Dec. 2017 | IB(NA)1501275-G<br>IB(NA)1501276-G | The descriptions were revised in response to S/W version C7 of Mitsubishi Electric CNC M800 Series/M80 Series.<br>The following chapters were added.<br>•5.2.2 Diameter/Radius Designation Switch ; G10.9<br>•19.1 Inclined Surface Machining ; G68.2/G69.1<br>•23.19 System Variables (Rotary Axis Configuration Parameter)<br>•23.27 System Variables (NC Data Reading/Writing with API Section and Sub-section Designation)<br><br>The following chapters were revised.<br>•3.4.3 Table of G Code Lists<br>•5.4 Decimal Point Input<br>•6.6.5 Circular Thread Cutting ; G35,G36<br>•6.8.11 Tool Radius Compensation<br>•6.9 Cylindrical Interpolation ; G07.1<br>•10.2 Constant Surface Speed Control ; G96,G97<br>•10.5 Spindle Position Control (Spindle/C Axis Control)<br>•13.1 Fixed Cycle for Turning Machining<br>•13.3.1 Longitudinal Cutting Cycle ; G77<br>•14.3 User Macro<br>•15.6 Manual Arbitrary Reverse Run Prohibition ; G127<br>•15.7 Data Input by Program<br>•15.11 Interactive Cycle Insertion; G180<br>•16.3 Mixed Control<br>•16.5 Control Axis Synchronization between Part Systems ; G125<br>•17.1 High-speed Machining Mode<br>•17.2 High-accuracy Control<br>•17.3 High-speed High-accuracy Control<br>•17.4 Machining Condition Selection I ; G120.1,G121<br>•18.1 Spindle Synchronization<br>•18.3 Tool Spindle Synchronization II<br>•19.2 Simple Inclined Surface Machining<br>•20.6 Workpiece Coordinate System Setting and Offset ; G54 to G59 (G54.1)<br>•20.8 Workpiece Coordinate System Preset ; G92.1<br>•23.1 System Variables List<br>•23.11 System Variables (Position Information)<br><br>Other mistakes were corrected. |

| Date of revision | Manual No. | Revision details |
|---|---|---|
| Apr. 2018 | IB(NA)1501275-H<br>IB(NA)1501276-H | The descriptions were revised in response to Mitsubishi Electric CNC E80 Series.<br>The descriptions were revised in response to S/W version D1 of Mitsubishi Electric CNC M800 Series/M80 Series.<br><br>The following chapters were added.<br>•13.3.8 Selecting Finished Shape Program Search Method<br>•13.3.9 Tool Shape Compensation for Turning<br><br>The following chapters were revised.<br>•Introduction<br>•5.4 Decimal Point Input<br>•10.5 Spindle Position Control (Spindle/C Axis Control)<br>•13.3 Compound Type Fixed Cycle for Turning Machining<br>•13.3.2 Face Rough Cutting Cycle; G72<br>•13.3.3 Formed Material Rough Cutting Cycle; G73<br>•13.3.4 Finishing Cycle; G70<br>•13.3.8 Precautions for Compound Type Fixed Cycle for Turning Machining (G70 to G76)<br>•13.5.2 Face Tapping Cycle (Longitudinal Tapping Cycle) / Face Reverse Tapping Cycle (Longitudinal Reverse Tapping Cycle); G84 (G88)/G84.1 (G88.1)<br>•15.8 Tool Life Management II ; G10 L3, G11<br>•19.1.4 Relationship between Inclined Surface Machining and Other Functions<br>•19.2 Simple Inclined Surface Machining<br><br>Other mistakes were corrected. |
| Sep. 2018 | IB(NA)1501275-J<br>IB(NA)1501276-J | The descriptions were revised in response to S/W version B0 of Mitsubishi Electric CNC C80 Series.<br>The following chapters were added.<br>•15.14 Machining Interruption [C80]; G26<br><br>The following chapters were revised.<br>•3.2 File Format<br>•3.4.3 Table of G Code Lists<br>•5.4 Decimal Point Input<br>•7.14.1 Rapid Traverse Block Overlap for G00; G0.5<br>•10.5 Spindle Position Control (Spindle/C Axis Control)<br>•12.1.4 Tool Compensation for Additional Axes<br>•13.3.1 Longitudinal Rough Cutting Cycle; G71<br>•14.1 Subprogram Control; M98, M99, M198<br>•14.2 Variable Commands<br>•16.3.2 Arbitrary Axis Exchange ; G140, G141, G142<br>•16.9.1 Sub Part System Control I; G122<br>•17.2 High-accuracy Control<br>•18.1 Spindle Synchronization<br>•18.2.3 Tool Spindle Synchronization IC (Spindle-NC Axis, Polygon) ; G51.2/G50.2 or G251/G250 (only 6 and 7 in G code list)<br>•18.3.1 Tool Spindle Synchronization II (Hobbing) ; G114.3/G113<br>•18.5 Multiple Spindle Synchronization Set Control<br><br>Other mistakes were corrected. |

| Date of revision | Manual No. | Revision details |
|---|---|---|
| Jun. 2019 | IB(NA)1501275-K<br>IB(NA)1501276-K | The descriptions were revised in response to S/W version E0 of Mitsubishi Electric CNC M800 Series/M80 Series/E80 Series.<br><br>The following chapters were added.<br>•15.7.2 Compensation Data Input by Program (Tool Compensation Amount) ; G10 L10/L11, G11<br>•15.7.3 Compensation Data Input by Program (Workpiece Offset Amount) ; G10 L2/L20, G11<br>•20.9 3-dimensional Coordinate Conversion; G68.1/G69.1<br>•21.2.1 Stroke Check Before Travel in Stored Stroke Limit Area (only 6 and 7 in G code list)<br><br>The following chapters were revised.<br>•Introduction<br>•3.4 G Code<br>•5.1 Absolute Command/Incremental Command; G90, G91<br>•5.4 Decimal Point Input<br>•6.7 Helical Interpolation; G02, G03<br>(The title and contents were revised.)<br>•14.1 Subprogram Control; M98, M99, M198<br>•15.8 Tool Life Management<br>(The title and contents were revised.)<br>•15.4 Geometric I; G01 A_<br>•15.5 Geometric IB<br>•15.13 Program Format Switch; G188/G189<br>•16.3 Mixed Control<br>•16.4 Control Axis Superimposition<br>•16.8 Synchronization between Part Systems<br>•17.1 High-speed Machining Mode<br>•17.2 High-accuracy Control<br>•17.3 High-speed High-accuracy Control<br>•18.1 Spindle Synchronization<br>•18.2 Tool Spindle Synchronization I<br>•18.3 Tool Spindle Synchronization II<br>•19.1 Inclined Surface Machining; G68.2/G69.1<br>•19.2 Simple Inclined Surface Machining<br>•20.3 Basic Machine Coordinate System Selection; G53<br>•20.4 Coordinate System Setting; G92<br>•20.5 Local Coordinate System Setting; G52<br>•20.6 Workpiece Coordinate System Selection and Extended Workpiece Coordinate System Selection; G54 to G59, G54.1<br>•20.7 Workpiece Coordinate System Shift; G10 L10 P0<br>(The title and contents were revised.)<br>•20.10 Coordinate Rotation by Program; G68.1/G69.1<br><br>Other mistakes were corrected. |

| Date of revision | Manual No. | Revision details |
|---|---|---|
| Sep. 2019 | IB(NA)1501275-L<br>IB(NA)1501276-L | The descriptions were revised in response to S/W version E1 of Mitsubishi Electric CNC M800 Series/M80 Series/E80 Series.<br><br>The following chapters were revised.<br>•Introduction<br>•3.1 Program Format<br>•5.4 Decimal Point Input<br>•6.7 Helical Interpolation; G02, G03<br>•6.10 Polar Coordinate Interpolation; G12.1, G13.1/G112, G113 (Only 6 and 7 in G Code List)<br>•6.11 Exponential Interpolation; G02.3, G03.3<br>•10.5 Spindle Position Control (Spindle/C Axis Control)<br>•12.1.3 Allocation of Tool Compensation Sets to Part Systems<br>•13.3.1 Longitudinal Rough Cutting Cycle; G71<br>•13.5.2 Face Tapping Cycle (Longitudinal Tapping Cycle) / Face Reverse Tapping Cycle (Longitudinal Reverse Tapping Cycle); G84 (G88)/G84.1 (G88.1)<br>•13.5.10 Drilling Cycle High-Speed Retract<br>•13.6.1 Drilling Cycle, Spot Drilling Cycle ; G81<br>•15.6 Manual Arbitrary Reverse Run Prohibition ; G127<br>•15.7.1 Parameter Input by Program; G10 L70, G11<br>•17.1.1 High-speed Machining Mode I, II; G05 P1, G05 P2<br>•17.2.3 Tolerance Control<br>•17.3.1 High-speed High-accuracy Control I, II ; G05.1 Q1/Q0, G05 P10000/P0<br>•17.3.4 Precautions on High-speed High-accuracy Control<br>•17.4 Machining Condition Selection I ; G120.1,G121<br>•18.5 Multiple Spindle Synchronization Set Control<br>•19.1 Inclined Surface Machining; G68.2/G69.1<br>•19.1.5 Precautions for Inclined Surface Machining<br>•19.2.1 Simple Inclined Surface Control ; G176<br>•19.3 Rotation Center Error Compensation (Precautions for Creating a Machining Program)<br>•20.5 Local Coordinate System Setting; G52<br>•20.10 Coordinate Rotation by Program; G68.1/G69.1<br>•23.1 System Variables List<br>•23.7 System Variables (Tool Life Management)<br>•24 Appx.1: Fixed Cycles<br><br>Other mistakes were corrected. |

| Date of revision | Manual No. | Revision details |
|---|---|---|
| Dec. 2019 | IB(NA)1501275-M<br>IB(NA)1501276-M | The descriptions were revised in response to S/W version B5 of Mitsubishi Electric CNC C80 Series.<br><br>The following chapters were revised.<br>•2.1 Input Setting Unit And Program Command Unit<br>•7.13.2 Deceleration Check When Movement in the Opposite Direction Is Reversed<br>•9.1 Miscellaneous Functions (M8-digits)<br>•10.5 Spindle Position Control (Spindle/C Axis Control)<br>•14.2 Variable Commands<br>•14.4.5 Miscellaneous Command Macro Call (for M, S, T, B Code Macro Call)<br>•14.6.1 Operation Commands<br>•18.2.1 Tool Spindle Synchronization IA (Spindle-Spindle, Polygon) ; G114.2, G113<br>•22.1 Automatic Tool Length Measurement; G37<br>•23.1 System Variables List<br>•23.7 System Variables (Tool Life Management)<br>•23.26 System Variables (ZR Device Access Variables) [C80]<br><br>Other mistakes were corrected. |
| Jun. 2020 | IB(NA)1501275-N<br>IB(NA)1501276-N | The descriptions were revised in response to S/W version F1 of Mitsubishi Electric CNC M800 Series/M80Series/E80 Series.<br><br>The following chapters were revised.<br>•Precautions for Safety<br>•3.2 File Format<br>•3.4.3 Table of G Code Lists<br>•7.8 Rapid Traverse Constant-gradient Acceleration/Deceleration<br>•7.9 Cutting Feed Constant-gradient Acceleration/Deceleration<br>•8.1 Dwell (Time-based Designation); G04<br>•8.2 Dwell (Revolution-based Designation); G04<br>•13.3.10 Precautions for Compound Type Fixed Cycle for Turning Machining (G70 to G76)<br>•14.2 Variable Commands<br>•14.4.4 G Code Macro Call<br>•14.4.7 ASCII Code Macro<br>•15.7.3 Compensation Data Input by Program (Workpiece Offset Amount) ; G10 L2/L20, G11<br>•15.12 Axis Name Extension<br>•16.3.2 Arbitrary Axis Exchange ; G140, G141, G142<br>•16.4.1 Control Axis Superimposition ; G126<br>•16.9.1 Sub Part System Control I; G122<br>•16.9.2 Sub Part System Control II ; G144<br>•17.3.2 Acceleration Clamp Speed<br>•17.4 Machining Condition Selection I ; G120.1, G121<br>•18.4 Spindle Superimposition ; G164, G113/G113.1<br>(The title and contents were revised.)<br>•20.4 Coordinate System Setting; G92<br>•20.6 Workpiece Coordinate System Selection and Extended Workpiece Coordinate System Selection; G54 to G59, G54.1<br>•20.9 3-dimensional Coordinate Conversion; G68.1/G69.1<br>•22.7 Programmable Current Limitation; G10 L14<br><br>(Continue to the next page) |

| Date of revision | Manual No. | Revision details |
|---|---|---|
| | | (Continued from the previous page)<br>•23.12 System Variables (Alarm)<br>•23.13 System Variables (Message Display and Stop)<br>•23.24 System Variables (PLC Data Reading)<br><br>Other mistakes were corrected. |
| Mar. 2021 | IB(NA)1501275-P<br>IB(NA)1501276-P | The descriptions were revised in response to S/W version F4 of Mitsubishi Electric CNC M800 Series/M80 Series/E80 Series.<br>The descriptions were revised in response to S/W version B7 of Mitsubishi Electric CNC C80 Series.<br><br>The following chapters were added.<br>•6.8.10 Relationship between Milling Interpolation and Other Functions<br>•15.15 Vibration Cutting Control (VCC); G08.5<br><br>The following chapters were revised.<br>•6.10 Polar Coordinate Interpolation; G12.1, G13.1/G112, G113 (Only 6 and 7 in G Code List)<br>•13.3 Compound Type Fixed Cycle for Turning Machining<br>•17.1.1 High-speed Machining Mode I, II; G05 P1, G05 P2<br>•17.3.1 High-speed High-accuracy Control I, II ; G05.1 Q1/Q0, G05 P10000/P0<br>•23.26 System Variables (ZR Device Access Variables) [C80]<br><br>The following chapters were removed.<br>•6.8.8 Program Support Functions<br><br>Other mistakes were corrected. |
| Jul. 2022 | IB(NA)1501275-Q<br>IB(NA)1501276-Q | The descriptions were revised in response to S/W version F8 of Mitsubishi Electric CNC M800 Series/M80 Series/E80 Series.<br>The descriptions were revised in response to S/W version BA of Mitsubishi Electric CNC C80 Series.<br><br>The following chapters were added.<br>•13.5.6 Hole Edge Chamfering Cycle; G185<br>•13.6.9 Hole Edge Chamfering Cycle; G185<br>•14.4.7 Handling the Macro Call Command [C80]<br><br>The following chapters were revised.<br>•3.4.3 Table of G Code Lists<br>•6.6.1 Constant Lead Thread Cutting; G33<br>•6.9 Cylindrical Interpolation; G07.1<br>•7.4 Feed Per Minute/Feed Per Revolution (Asynchronous Feed/Synchronous Feed); G94,G95<br>•7.14.1 Rapid Traverse Block Overlap for G00; G0.5<br>•7.14.2 Rapid Traverse Block Overlap for G28<br>•8.1 Dwell (Time-based Designation); G04<br>•8.2 Dwell (Revolution-based Designation); G04<br>•9.1 Miscellaneous Functions (M8-Digits)<br>•10.5 Spindle Position Control (Spindle/C Axis Control)<br>•13.5 Fixed Cycle for Drilling<br>•13.5.7 Fixed Cycle for Drilling Cancel; G80<br>•13.5.8 Precautions When Using a Fixed Cycle for Drilling<br>•13.6 Fixed Cycle for Drilling (MITSUBISHI CNC Special Format)<br>(Continue to the next page) |

| Date of revision | Manual No. | Revision details |
|---|---|---|
| | | (Continued from the previous page)<br>•14.1.1 Subprogram Call; M98, M99<br>•14.4.6 Detailed Description for Macro Call Instruction<br>•14.6.2 Control Commands<br>•20.10 Coordinate Rotation by Program; G68.1/G69.1<br>•23.3 System Variables (Non-G Command Modal)<br>•23.13 System Variables (Message Display and Stop)<br>•23.27 System Variables (NC Data Reading/Writing with API Section and Sub-section Nos. Input/Output by Program) [M8]<br><br>Other mistakes were corrected. |
| | | |

# Global Service Network

## AMERICA

***MITSUBISHI ELECTRIC AUTOMATION INC. (AMERICA FA CENTER)***
**Central Region Service Center (Chicago)**
500 CORPORATE WOODS PARKWAY, VERNON HILLS, ILLINOIS 60061, U.S.A.
TEL: +1-847-478-2500 / FAX: +1-847-478-2650
**Minneapolis, MN Service Satellite**
**Detroit, MI Service Satellite**
**Grand Rapids, MI Service Satellite**
**Milwaukee, WI Service Satellite**
**Cleveland, OH Service Satellite**
**Indianapolis, IN Service Satellite**
**St. Louis, MO Service Satellite**

**South/East Region Service Center (Georgia)**
1845 SATELLITE BOULEVARD STE. 450, DULUTH, GEORGIA 30097, U.S.A.
TEL +1-678-258-4529 / FAX +1-678-258-4519
**Charleston, SC Service Satellite**
**Charlotte, NC Service Satellite**
**Raleigh, NC Service Satellite**
**Dallas, TX Service Satellite**
**Houston, TX Service Satellite**
**Hartford, CT Service Satellite**
**Knoxville, TN Service Satellite**
**Nashville, TN Service Satellite**
**Baltimore, MD Service Satellite**
**Pittsburg, PA Service Satellite**
**Tampa, FL Service Satellite**
**Syracuse, NY Service Satellite**
**Orlando, FL Service Satellite**
**Lafayette, LA Service Satellite**
**Philadelphia, PA Service Satellite**

**Western Region Service Center (California)**
5900-B KATELLA AVE. - 5900-A KATELLA AVE. CYPRESS, CALIFORNIA 90630, U.S.A.
TEL: +1-714-699-2625 / FAX: +1-847-478-2650
**San Jose, CA Service Satellite**
**Seattle, WA Service Satellite**
**Denver, CO Service Satellite**

**Canada Region Service Center (Toronto)**
4299 14TH AVENUE MARKHAM, ONTARIO L3R OJ2, CANADA
TEL: +1-905-475-7728 / FAX: +1-905-475-7935
**Edmonton, AB Service Satellite**
**Montreal, QC Service Satellite**

**Mexico Region Service Center (Queretaro)**
Parque Tecnológico Innovación Querétaro, Lateral Carretera Estatal 431, Km 2+200, Lote 91 Modulos 1 y 2
Hacienda la Machorra, CP 76246, El Marqués, Querétaro, México
TEL: +52-442-153 6050
**Monterrey, NL Service Satellite**
**Mexico City, DF Service Satellite**

## BRAZIL

***MITSUBISHI ELECTRIC DO BRASIL COMÉRCIO E SERVIÇOS LTDA.***
**Votorantim Office**
AV. GISELE CONSTANTINO,1578, PARQUE BELA VISTA, VOTORANTIM-SP, BRAZIL CEP:18.110-650
TEL: +55-15-3023-9000
**Blumenau, Santa Catarina Office**

## EUROPE

***MITSUBISHI ELECTRIC EUROPE B.V.***
**European Service Headquarters (Dusseldorf, GERMANY)**
Mitsubishi-Electric-Platz 1 40882 RATINGEN, GERMANY
TEL: +49-2102-486-5000 / FAX: +49-2102-486-5910

**South Germany Service Center (Stuttgart)**
SCHELMENWASENSTRASSE 16-20, 70567 STUTTGART, GERMANY
TEL: + 49-711-770598-123 / FAX: +49-711-770598-141

**France Service Center (Paris)**
2 RUE DE L'UNION, 92565 RUEIL-MALMAISON CEDEX, FRANCE
TEL: +33-1-41-02-83-13 / FAX: +33-1-49-01-07-25

**France Service Satellite (Lyon)**
120, ALLEE JACQUES MONOD 69800 SAINT PRIEST FRANCE
TEL: +33-1-41-02-83-13 / FAX: +33-1-49-01-07-25

**Italy Service Center (Milan)**
CENTRO DIR. COLLEONI, PALAZZO SIRIO, VIALE COLLEONI 7, 20864 AGRATE BRIANZA (MB) ITALY
TEL: +39-039-6053-342 / FAX: +39-039-6053-206

**Italy Service Satellite (Padova)**
VIA G. SAVELLI, 24 - 35129 PADOVA, ITALY
TEL: +39-039-6053-342 / FAX: +39-039-6053-206

**U.K. Service Center**
TRAVELLERS LANE, HATFIELD, HERTFORDSHIRE, AL10 8XB, U.K.
TEL: +44-1707-288-780 / FAX: +44-1707-278 695

**Spain Service Center**
CTRA. RUBI, 76-80 8174 SAINT CUGAT DEL VALLES, BARCELONA, SPAIN
TEL: +34-935-65-2236 / FAX: +34-935-89-1579

**Poland Service Center**
UL.KRAKOWSKA 50, 32-083 BALICE, POLAND
TEL: +48-12-347-6500 / FAX: +48-12-630-4701

**Hungary Service Center**
BUDAÖRS OFFICE PARK, SZABADSÁG ÚT 117., 2040 BUDAÖRS, HUNGARY
TEL: +48-12-347-6500 / FAX: +48-12-630-4701

**Turkey Service Center**
**MITSUBISHI ELECTRIC TURKEY ELEKTRİK ÜRÜNLERİ A.Ş**
SERIFALI MAHALLESI KALE SOKAK. NO.41 34775
UMRANIYE, ISTANBUL, TURKEY
TEL: +90-216-969-2500 / FAX: +90-216-661-44-47

**Czech Republic Service Center**
**AutoCont Control Systems s.r.o (Service Partner)**
KAFKOVA 1853/3, 702 00 OSTRAVA 2, CZECH REPUBLIC
TEL: +420-59-5691-185 / FAX: +420-59-5691-199

**Russia Service Center**
**MITSUBISHI ELECTRIC RUSSIA LLC**
LETNIKOVSKAYA STREET 2, BLD.1, 5TH 115114 MOSCOW, RUSSIA
TEL: +7-495-721-2070 / FAX: +7-495-721-2071

**Sweden Service Center**
HAMMARBACKEN 14, P.O.BOX 750 SE-19127, SOLLENTUNA, SWEDEN
TEL: +46-8-6251200 / FAX: +46-8-6251014

**Bulgaria Service Center**
**AKHNATON Ltd. (Service Partner)**
4 ANDREJ LJAPCHEV BLVD. POB 21, BG-1756 SOFIA, BULGARIA
TEL: +359-2-8176009 / FAX: +359-2-9744061

**Ukraine Service Center (Kiev)**
**CSC Automation Ltd. (Service Partner)**
4 B, YEVHENA SVERSTYUKA STR., 02002 KIEV, UKRAINE
TEL: +380-44-494-3344 / FAX: +380-44-494-3366

**Belarus Service Center**
**TECHNIKON Ltd. (Service Partner)**
NEZAVISIMOSTI PR.177, 220125 MINSK, BELARUS
TEL: +375-17-393-1177 / FAX: +375-17-393-0081

**South Africa Service Center**
**Adroit Technologies (Service Partner)**
20 WATERFORD OFFICE PARK, WATERFORD DRIVE, CNR OF WITKOPPEN ROAD,
FOURWAYS JOHANNESBURG SOUTH AFRICA
TEL: +27-11-658-8100 / FAX: +27-11- 658-8101

## ASEAN

***MITSUBISHI ELECTRIC ASIA PTE. LTD. (ASEAN FA CENTER)***
**Singapore Service Center**
307 ALEXANDRA ROAD #05-01/02 MITSUBISHI ELECTRIC BUILDING SINGAPORE 159943
TEL: +65-6473-2308 / FAX: +65-6476-7439

## PHILIPPINES

***MELCO FACTORY AUTOMATION PHILIPPINES INC.***
**Head Office**
128 LOPEZ RIZAL STREET, BRGY., HIGHWAY HILLS, MANDALUYONG CITY , MM PHILIPPINES 1550
TEL: +63-2-8256-8042 / FAX: +632-8637-2294

**Philippines Service Center**
KM.23 WEST SERVICE ROAD SSH, CUPANG ,MUNTINLUPA CITY, PHILIPPINES
TEL: +63-2-8807-0420 / FAX: +63-2-8842-5202

## VIETNAM

***MITSUBISHI ELECTRIC VIETNAM CO., LTD.***
**Vietnam Ho Chi Minh Service Center**
11TH & 12TH FLOOR, VIETTEL TOWER B, 285 CACH MANG THANG 8 STREET, WARD 12, DISTRICT 10,
HO CHI MINH CITY, VIETNAM
TEL: +84-28-3910 5945 / FAX: +84-28-3910 5947

**Vietnam Hanoi Service Center**
24TH FLOOR, HANDICO TOWER, PHAM HUNG ROAD, ME TRI HA, ME TRI WARD,
NAM TU LIEM DISTRICT, HA NOI CITY, VIETNAM
TEL: +84-24-3937-8075 / FAX: +84-24-3937-8076

## INDONESIA

***PT. MITSUBISHI ELECTRIC INDONESIA***
**Indonesia Service Center (Cikarang)**
JL. KENARI RAYA BLOK G2-07A, DELTA SILICON 5, LIPPO CIKARANG - BEKASI 17550, INDONESIA
TEL: +62-21-2961-7797 / FAX: +62-21-2961-7794

## MALAYSIA

***MITSUBISHI ELECTRIC SALES MALAYSIA SDN. BHD.***
**Malaysia Service Center (Kuala Lumpur Service Center)**
LOT 11, JALAN 219, P.O BOX 1036, 46860 PETALING JAYA, SELANGOR DARUL EHSAN, MALAYSIA
TEL: +60-3-7626-5032 / FAX: +60-3-7960-2629
**Johor Bahru Service Satellite**
**Pulau Pinang Service Satellite**

## THAILAND

***MITSUBISHI ELECTRIC FACTORY AUTOMATION (THAILAND) CO., LTD.***
**Thailand Service Center (Bangkok)**
101, TRUE DIGITAL PARK OFFICE, 5TH FLOOR, SUKHUMVIT ROAD, BANGCHAK, PHRAKHANONG,
BANGKOK, 10260 THAILAND
TEL: +66-2-092-8600 / FAX: +66-2-043-1231-33

## INDIA

***MITSUBISHI ELECTRIC INDIA PVT., LTD.***
**CNC Technical Center (Bangalore)**
PLOT NO. 56, 4TH MAIN ROAD, PEENYA PHASE 3,
PEENYA INDUSTRIAL AREA, BANGALORE 560058, KARNATAKA, INDIA
TEL : +91-80-4655-2121 / FAX : +91-80-4655-2147
**Chennai Service Satellite**
**Coimbatore Service Satellite**
**Hyderabad Service Satellite**

**North India Service Center (Gurgaon)**
PLOT 517, GROUND FLOOR, UDYOG VIHAR PHASE-III, GURUGRAM 122008, HARYANA, INDIA
TEL : +91-124-463-0300 / FAX : +91-124-463-0399
**Ludhiana Service Satellite**
**Panthnagar Service Satellite**
**Delhi Service Satellite**
**Jamshedpur Service Satellite**
**Manesar Service Satellite**

**West India Service Center (Pune)**
ICC-Devi GAURAV TECHNOLOGY PARK, UNIT NO.402, FOURTH FLOOR, NORTH WING,
SURVEY NUMBER 191-192 (P), NEXT to INDIAN CARD CLOTHING COMPANY Ltd,
OPP. VALLABH NAGAR, PIMPRI, PUNE- 411 018, MAHARASHTRA, INDIA
TEL : +91-20-6819 2274 / FAX : +91-20-4624 2100
**Kolhapur Service Satellite**
**Aurangabad Service Satellite**
**Mumbai Service Satellite**

**West India Service Center (Ahmedabad)**
204-209, 2ND FLOOR, 31FIVE, CORPORATE ROAD PRAHLADNAGAR,
AHMEDABAD -380015, GUJARAT, INDIA
TEL : + 91-79-6777 7888
**Rajkot Service Satellite**

## CHINA

***MITSUBISHI ELECTRIC AUTOMATION (CHINA) LTD. (CHINA FA CENTER)***
**CNC Call Center**
TEL: +86-400-921-5130

**Shanghai Service Center**
1-3,5-10,18-23/F, NO.1386 HONG QIAO ROAD, CHANG NING QU,
SHANGHAI 200336, CHINA
TEL: +86-21-2322-3030 / FAX: +86-21-2322-3000*8422
**Qingdao Service Center**
**Suzhou Service Center**
**Wuhan Service Center**
**Ningbo Service Center**
**Hefei Service Center**
**Beijing Service Center**
**Tianjin Service Center**
**Xian Service Center**
**Dalian Service Center**
**Chengdu Service Center**

**Shenzhen Service Center**
LEVEL8, GALAXY WORLD TOWER B, 1 YABAO ROAD, LONGGANG DISTRICT,
SHENZHEN 518129, CHINA
TEL: +86-755-2399-8272 / FAX: +86-755-8229-3686
**Dongguan Service Center**
**Xiamen Service Center**

## KOREA

***MITSUBISHI ELECTRIC AUTOMATION KOREA CO., LTD. (KOREA FA CENTER)***
**Korea Service Center**
8F GANGSEO HANGANG XI-TOWER A, 401 YANGCHEON-RO, GANGSEO-GU,
SEOUL 07528 KOREA
TEL: +82-2-3660-9631 / FAX: +82-2-3664-8668
**Korea Daegu Service Satellite**

## TAIWAN

***MITSUBISHI ELECTRIC TAIWAN CO., LTD. (TAIWAN FA CENTER)***
**Taiwan Taichung Service Center**
NO. 8-1, GONGYEQU 16th RD., XITUN DIST., TAICHUNG CITY 40768 , TAIWAN
TEL: +886-4-2359-0688 / FAX: +886-4-2359-0689

**Taiwan Taipei Service Center**
11F, NO.88, SEC.6, ZHONGSHAN N. RD., SHILIN DIST., TAIPEI CITY 11155, TAIWAN
TEL: +886-2-2833-5430 / FAX: +886-2-2833-5433

**Taiwan Tainan Service Center**
11F.-1, NO.30, ZHONGZHENG S. RD., YONGKANG DIST., TAINAN CITY 71067, TAIWAN
TEL: +886-6-252-5030 / FAX: +886-6-252-5031

## OCEANIA

***MITSUBISHI ELECTRIC AUSTRALIA PTY. LTD.***
**Oceania Service Center**
348 VICTORIA ROAD, RYDALMERE, N.S.W. 2116 AUSTRALIA
TEL: +61-2-9684-7269/ FAX: +61-2-9684-7245

**Notice**

Every effort has been made to keep up with software and hardware revisions in the contents described in this manual. However, please understand that in some unavoidable cases simultaneous revision is not possible.
Please contact your Mitsubishi Electric dealer with any questions or comments regarding the use of this product.

**Duplication Prohibited**

This manual may not be reproduced in any form, in part or in whole, without written permission from Mitsubishi Electric Corporation.

COPYRIGHT 2015-2022 MITSUBISHI ELECTRIC CORPORATION
ALL RIGHTS RESERVED

**MITSUBISHI ELECTRIC CORPORATION**
HEAD OFFICE : TOKYO BLDG.,2-7-3 MARUNOUCHI,CHIYODA-KU,TOKYO 100-8310,JAPAN



| | |
|---|---|
| MODEL | M800/M80/E80/C80 Series |
| MODEL CODE | 100-440<br>100-441 |
| Manual No. | IB-1501275 |

Made in JAPAN

Specifications are subject to change without notice.