MITSUBISHI ELECTRIC

Changes for the Better

Numerical Control (CNC)

Connection and Setup Manual

C80 Series

IB-1501452(ENG)-E

Introduction

This manual covers the items required for installing, connecting and setting up the C80.
Read this manual thoroughly and understand the product's functions and performance before starting to use.
This manual is written on the assumption that all optional functions are added, but the actually delivered device may not have all functions.
The unit names, cable names and various specifications are subject to change without notice. Please confirm these before placing an order.
Be sure to keep this manual always at hand.

Notes on Reading This Manual

(1) This manual explains general parameters as viewed from the NC.
For information about each machine tool, refer to manuals issued from the machine tool builder.
If the descriptions relating to "restrictions" and "allowable conditions" conflict between this manual and the machine tool builder's instruction manual, the later has priority over the former.

(2) This manual is intended to contain as much descriptions as possible even about special operations.
The operations to which no reference is made in this manual should be considered "impossible".

(3) The characteristic values and numerical values without tolerances mentioned in this manual are representative values.

⚠ CAUTION

⚠ **For items described as "Restrictions" or "Usable State" in this manual, the instruction manual issued by the machine tool builder takes precedence over this manual.**

⚠ **Items that are not described in this manual must be interpreted as "not possible".**

⚠ **This manual is written on the assumption that all the applicable functions are included.**
Some of them, however, may not be available for your NC system.
Refer to the specifications issued by the machine tool builder before use.

⚠ **For information about each machine tool, refer to manuals issued from the machine tool builder.**

⚠ **Some screens and functions may differ depending on each NC system (or version), and some functions may not be possible. Please confirm the specifications before starting to use.**

⚠ **To protect the availability, integrity and confidentiality of the NC system against cyber-attacks including unauthorized access, denial-of-service (Dos) (*1) attack, and computer virus from external sources via a network, take security measures such as firewall, VPN, and anti-virus software.**
(*1) Denial-of-service (Dos) refers to a type of cyber-attack that disrupts services by overloading the system or by exploiting a vulnerability of the system.

⚠ **Mitsubishi Electric assumes no responsibility for any problems caused to the NC system by any type of cyber-attacks including DoS attack, unauthorized access and computer virus.**

Also refer to the manuals on "Manual List" as necessary.

Manual List

Manuals related to M800/M80/E80/C80 Series are listed as follows.
These manuals are written on the assumption that all optional functions are added to the targeted model.
Some functions or screens may not be available depending on the machine or specifications set by MTB. (Confirm the specifications before use.)
The manuals issued by MTB take precedence over these manuals.

Manual	IB No.	Purpose and Contents
M800/M80/E80 Series Instruction Manual	IB-1501274	• Operation guide for NC • Explanation for screen operation, etc.
C80 Series Instruction Manual	IB-1501453	• Operation guide for NC • Explanation for screen operation, etc.
M800/M80/E80/C80 Series Programming Manual (Lathe System) (1/2)	IB-1501275	• G code programming for lathe system • Basic functions, etc.
M800/M80/E80/C80 Series Programming Manual (Lathe System) (2/2)	IB-1501276	• G code programming for lathe system • Functions for multi-part system, high-accuracy function, etc.
M800/M80/E80/C80 Series Programming Manual (Machining Center System) (1/2)	IB-1501277	• G code programming for machining center system • Basic functions, etc.
M800/M80/E80/C80 Series Programming Manual (Machining Center System) (2/2)	IB-1501278	• G code programming for machining center system • Functions for multi-part system, high-accuracy function, etc.
M800/M80/E80 Series Alarm/Parameter Manual	IB-1501279	• Alarms • Parameters
C80 Series Alarm/Parameter Manual	IB-1501560	• Alarms • Parameters

Manuals for MTBs (NC)

Manual	IB No.	Purpose and Contents
M800/M80/E80/C80 Series Specifications Manual (Function)	IB-1501505	• Model selection • Outline of various functions
M800/M80/E80/C80 Series Specifications Manual (Hardware)	IB-1501506	• Model selection • Specifications of hardware unit
M800W/M80W Series Connection and Setup Manual	IB-1501268	• Detailed specifications of hardware unit • Installation, connection, wiring, setup (startup/adjustment)
M800S/M80/E80 Series Connection and Setup Manual	IB-1501269	• Detailed specifications of hardware unit • Installation, connection, wiring, setup (startup/adjustment)
C80 Series Connection and Setup Manual	IB-1501452	• Detailed specifications of hardware unit • Installation, connection, wiring, setup (startup/adjustment)
M800/M80/E80 Series PLC Development Manual	IB-1501270	• Electrical design • I/O relation (assignment, setting, connection), field network • Development environment (PLC on-board, peripheral development environment), etc.
M800/M80/E80 Series PLC Programming Manual	IB-1501271	• Electrical design • Sequence programming • PLC support functions, etc.
M800/M80/E80/C80 Series PLC Interface Manual	IB-1501272	• Electrical design • Interface signals between NC and PLC
M800/M80/E80 Series Maintenance Manual	IB-1501273	• Cleaning and replacement for each unit • Other items related to maintenance
C80 Series Maintenance Manual	IB-1501454	• Cleaning and replacement for each unit • Other items related to maintenance

Manuals for MTBs (drive section)

Manual	IB No.	Contents
MDS-E/EH Series Specifications Manual	IB-1501226	• Specifications for power supply regeneration type
MDS-E/EH Series Instruction Manual	IB-1501229	• Instruction for power supply regeneration type
MDS-EJ/EJH Series Specifications Manual	IB-1501232	• Specifications for regenerative resistor type
MDS-EJ/EJH Series Instruction Manual	IB-1501235	• Instruction for regenerative resistor type
MDS-EM/EMH Series Specifications Manual	IB-1501238	• Specifications for multi-hybrid, power supply regeneration type
MDS-EM/EMH Series Instruction Manual	IB-1501241	• Instruction for multi-hybrid, power supply regeneration type
DATA BOOK	IB-1501252	• Specifications of servo drive unit, spindle drive unit, motor, etc.

Manuals for MTBs (Others)

Manual	No.	Purpose and Contents
GOT2000 Series User's Manual (Hardware)	SH-081194	• Outline of hardware such as part names, external dimensions, installation, wiring, maintenance, etc. of GOTs
GOT2000 Series User's Manual (Utility)	SH-081195	• Outline of utilities such as screen display setting, operation method, etc. of GOTs
GOT2000 Series User's Manual (Monitor)	SH-081196	• Outline of each monitor function of GOTs
GOT2000 Series Connection Manual (Mitsubishi Electric Products)	SH-081197	• Outline of connection types and connection method between GOT and Mitsubishi Electric connection devices
GT Designer3 (GOT2000) Screen Design Manual	SH-081220	• Outline of screen design method using screen creation software GT Designer3

■ For M800/M80/E80 Series

Manual	No.	Purpose and Contents
GOT2000/GOT1000 Series CC-Link Communication Unit User's Manual	IB-0800351	• Explanation for handling CC-Link communication unit (for GOT2000 series/GOT1000 series)
GX Developer Version 8 Operating Manual (Startup)	SH-080372E	• Explanation for system configuration, installation, etc. of PLC development tool GX Developer
GX Developer Version 8 Operating Manual	SH-080373E	• Explanation for operations using PLC development tool GX Developer
GX Converter Version 1 Operating Manual	IB-0800004E	• Explanation for operations using data conversion tool GX Converter
GX Works2 Installation Instructions	BCN-P5999-0944	• Explanation for the operating environment and installation method of GX Works2
GX Works2 Version 1 Operating Manual (Common)	SH-080779ENG	• Explanation for the system configuration of GX Works2 and the functions common to Simple project and Structured project such as parameter setting, operation method for the online function
GX Works2 Version 1 Operating Manual (Simple Project)	SH-080780ENG	• Explanation for methods for such as creating and monitoring programs in Simple project of GX Works2
GX Works2 Version 1 Operating Manual (Simple Project, Function Block)	SH-080984ENG	• Explanation for methods for such as creating function blocks, pasting function blocks to sequence programs, and operating FB library in Simple project of GX Works2
GX Works2 Version 1 Operating Manual (Structured Project)	SH-080781ENG	• Explanation for methods for such as creating and monitoring programs in Structured project of GX Works2
GX Works3 Installation Instructions	BCN-P5999-0391	• Explanation for the operating environment and installation method of GX Works3
MELSEC-Q CC-Link System Master/ Local Module User's Manual	SH-080394E	• Explanation for system configuration, installation, wiring, etc. of master/local modules for CC-Link system
GOT2000 Series Connection Manual (Non-Mitsubishi Electric Products 1)	SH-081198ENG	• Explanation for connection types and connection method between GOT and other company's devices
GOT2000 Series Connection Manual (Non-Mitsubishi Electric Products 2)	SH-081199ENG	
GOT2000 Series Connection Manual (Microcomputers, MODBUS/ Fieldbus Products, Peripherals)	SH-081200ENG	• Explanation for connection types and connection method between GOT and microcomputers, MODBUS/fieldbus products, peripherals
GT SoftGOT2000 Version1 Operating Manual	SH-081201ENG	• Explanation for system configuration, screen configuration and operation method of monitoring software GT SoftGOT2000

■ For C80 Series

Manual	No.	Purpose and Contents
MELSEC iQ-R Module Configuration Manual	SH-081262	♦ Outline of system configuration, specifications, installation, wiring, maintenance, etc.
MELSEC iQ-R CPU Module User's Manual (Startup)	SH-081263	♦ Outline of specifications, procedures before operation, troubleshooting, etc. for CPU module
MELSEC iQ-R CPU Module User's Manual (Application)	SH-081264	♦ Outline of memory, functions, devices, parameters, etc. for CPU module
MELSEC iQ-R CC-Link IE Field Network User's Manual (Application)	SH-081259	♦ Explanation for functions, parameter settings, programming, troubleshooting, etc. of the CC-Link IE Field Network function
QCPU User's Manual (Hardware Design, Maintenance and Inspection)	SH-080483	♦ Outline of specifications, necessary knowledge to configure the system and maintenance-related descriptions for Q series CPU module, etc.
GX Works3 Operating Manual	SH-081215	♦ Outline of functions, programming, etc.

Reference Manual for MTBs

Manual	No.	Purpose and Contents
M800/M80 Series Smart safety observation Specification manual	BNP-C3072-022	♦ Explanation for smart safety observation function
C80 Series Smart safety observation Specification manual	BNP-C3077-022	
M800/M80 Series CC-Link (Master/ Local) Specification manual	BNP-C3072-089	♦ Explanation for CC-Link
M800/M80 Series PROFIBUS-DP Specification manual	BNP-C3072-118	♦ Explanation for PROFIBUS-DP communication function
M800/M80 Series Interactive cycle insertion (Customization) Specification manual	BNP-C3072-121-0003	♦ Explanation for interactive cycle insertion
M800/M80 Series EtherNet/IP Specifications manual	BNP-C3072-263	♦ Explanation for EtherNet/IP
M800/M80 Series CC-Link IE Field (Master/local) Specifications manual	BNP-C3072-283	♦ Explanation for CC-Link IE Field
M800/M80 Series GOT Connection Specifications manual	BNP-C3072-314	♦ Explanation for GOT connection
M800/M80 Series CC-Link IE Field Basic Specifications manual	BNP-C3072-337	♦ Explanation for CC-Link IE Field Basic
M800/M80 Series FL-net Specifications manual	BNP-C3072-368	♦ Explanation for FL-net
M800/M80 Series Synchronous Control Specifications manual	BNP-C3072-074	♦ Explanation for synchronous control
M800/M80 Series Multiple-Axis Synchronization Control Specifications manual	BNP-C3072-339	♦ Explanation for multiple-axis synchronization control

Precautions for Safety

Always read this manual and enclosed documents before installation, operation, maintenance and inspection to ensure correct usage. Thoroughly understand the basics, safety information and precautions of the devices before using.
This manual classifies the safety precautions into "DANGER", "WARNING" and "CAUTION".

⚠ **DANGER** **When the user could be subject to imminent fatalities or serious injuries if handling is mistaken.**
⚠ **WARNING** **When the user could be subject to fatalities or serious injuries if handling is mistaken.**
⚠ **CAUTION** **When the user could be subject to injuries or the property could be damaged if handling is mistaken.**

Note that the items under " ⚠CAUTION" could lead to serious consequences as well depending on the situation. All the items are important and must always be observed.

The following signs indicate prohibition and compulsory.

⃠	**This sign indicates prohibited behavior (must not do).** **For example, indicates "Keep fire away".**
●	**This sign indicated a thing that is pompously (must do).** **For example, indicates "it must be grounded".**

The meaning of each pictorial sign is as follows.

CAUTION	**CAUTION rotated object**	**CAUTION HOT**	**Danger Electric shock risk**	**Danger explosive**
Prohibited	**Disassembly is prohibited**	**KEEP FIRE AWAY**	**General instruction**	**Earth ground**

For Safe Use

Mitsubishi CNC is designed and manufactured solely for applications to machine tools to be used for industrial purposes.
Do not use this product in any applications other than those specified above, especially those which are substantially influential on the public interest or which are expected to have significant influence on human lives or properties.

1. Items related to prevention of electric shocks

⚠ WARNING

- **Do not open or remove the front cover while the power is ON or during operation. The high voltage terminals and charged sections will be exposed, and this could result in electric shocks.**
- **Do not remove the front cover even when the power is OFF, except for the wiring works or periodic inspections. The inside of the controller and drive unit are charged, and this could result in electric shocks.**
- **Always wait at least 15 minutes after turning the power OFF. Then, check the voltage with a tester, etc., before wiring works, inspections or connecting with peripheral devices. Failure to observe this could result in electric shocks.**
- **Earth ground the controller, drive unit and motor according to the local laws. (In Japan, ground the 200V Series input products with Class C or higher protective grounding and the 400V Series input with Class D or higher protective grounding.)**
- **All wiring works, maintenance and inspections must be carried out by a qualified technician. Failure to observe this could result in electric shocks. Contact your nearby Service Center for replacing parts and servicing.**
- **Wire the controller, drive unit and motor after installation. Failure to observe this could result in electric shocks.**
- **Do not operate the switches with wet hands. Failure to observe this could result in electric shocks.**
- **Do not damage, apply excessive stress, place heavy things on or sandwich the cables. Failure to observe this could result in electric shocks.**
- **Insulate the power lead using a fixed terminal block. Failure to observe this could result in electric shocks.**

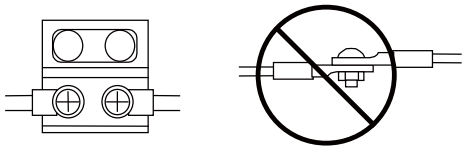

- **Completely turn off the all lines of the power supply externally before wiring. Not completely turning off all power could result in electric shock or damage to the product.**
- **When turning on the power supply or operating the module after wiring, be sure that the module's terminal covers are correctly attached.**
  Not attaching the terminal cover could result in electric shock.

2. Items related to prevention of fire

⚠ CAUTION

- **Install the controller, drive unit, motor and regenerative resistor on non-combustible material. Installation directly on or near combustible materials could result in fires.**
- **If any malfunction in the unit is observed, shut off the power at the unit's power supply side. Continuous flow of large current could result in fires.**
- **Install an appropriate no fuse breaker (NFB) and contactor (MC) on the power input section of the drive unit and configure the sequence that shuts the power off upon drive unit's emergency stop or alarm.**
- **When a breaker is shared for multiple power supply units, the breaker may not function upon short-circuit failure in a small capacity unit. Do not share a breaker for multiple units as this is dangerous.**
- **Incorrect wiring and connections could cause the devices to damage or burn.**

3. Items related to prevention of bodily injury or property damage

⚠ DANGER

- **When transporting or installing a built-in IPM spindle or linear servomotor, be careful so that your hand or property will not be trapped in the motors or other metal objects. Also keep the devices with low magnetic tolerance away from the product.**

⚠ CAUTION

- **Do not apply voltages to the connectors or terminals other than voltages indicated in the connection and setup manual for the controller or specifications manual for the drive unit. Failure to observe this could cause bursting, damage, etc.**
- **Incorrect connections could cause the devices to rupture or damage, etc. Always connect the cables to the indicated connectors or terminals.**
- **Incorrect polarity (+ -) could cause the devices to rupture or damage, etc.**
- **Persons wearing medical devices, such as pacemakers, must stay away from this unit. The electromagnetic waves could adversely affect the medical devices.**
- **Fins on the rear of the unit, regenerative resistor and motor, etc., will be hot during operation and for a while after the power has been turned OFF. Do not touch or place the parts and cables, etc. close to these sections. Failure to observe this could result in burns.**
- **Do not enter the machine's movable range during automatic operation. Keep your hands, feet or face away from the spindle during rotation.**

4. General precautions

Always follow the precautions below. Incorrect handling could result in faults, injuries or electric shocks, etc.

(1) Items related to product and manual

⚠ CAUTION

- **For items described as "Restrictions" or "Usable State" in this manual, the instruction manual issued by the machine tool builder takes precedence over this manual.**
- **Items that are not described in this manual must be interpreted as "not possible".**
- **This manual is written on the assumption that all the applicable functions are included.**
  Some of them, however, may not be available for your NC system.
  Refer to the specifications issued by the machine tool builder before use.
- **For information about each machine tool, refer to manuals issued from the machine tool builder.**
- **Some screens and functions may differ depending on each NC system (or version), and some functions may not be possible. Please confirm the specifications before starting to use.**
- **To protect the availability, integrity and confidentiality of the NC system against cyber-attacks including unauthorized access, denial-of-service (Dos) (*1) attack, and computer virus from external sources via a network, take security measures such as firewall, VPN, and anti-virus software.**
  (*1) Denial-of-service (Dos) refers to a type of cyber-attack that disrupts services by overloading the system or by exploiting a vulnerability of the system.
- **Mitsubishi Electric assumes no responsibility for any problems caused to the NC system by any type of cyber-attacks including DoS attack, unauthorized access and computer virus.**

(2) Transportation and installation

⚠ CAUTION

- **Correctly transport the products according to the mass.**
- **Do not stack the products exceeding the indicated limit.**
- **Do not hold the cables, shaft or encoder when transporting the motor.**
- **Do not transport the controller or drive unit by suspending or holding the connected wires or cables.**
- **Do not hold the front cover when transporting the unit, or the front cover could come off, causing the unit to drop.**
- **Install on a non-combustible place where the unit's or motor's mass can be withstood according to the instruction manual.**
- **The motor does not have a complete water-proof (oil-proof) structure. Do not allow oil or water to contact or enter the motor. Prevent the cutting chips from being accumulated on the motor as they easily soak up oil.**
- **When installing the motor facing upwards, take measures on the machine side so that gear oil, etc., will not enter the motor shaft.**
- **Do not remove the encoder from the motor. (The encoder installation screw is treated with sealing.)**
- **Do not allow foreign matters, especially, conductive foreign matters such as screws or metal chips, or combustible foreign matters such as oil, to enter the controller, drive unit or motor. Failure to observe this could result in rupture or damage.**
- **Do not get on the product or place heavy objects on it.**
- **Provide prescribed distance between the controller/drive unit and inner surface of the control panel/other devices.**
- **Do not install or operate the controller, drive unit or motor that is damaged or has missing parts.**

⚠ CAUTION

- ⚠ **Take care not to cut hands, etc. with the heat radiating fins or metal edges.**
- ⚠ **Do not block the intake/outtake ports of the motor with the cooling fan.**
- ⚠ **Install the controller's display section and operation board section on the spot where cutting oil will not reach.**
- ⚠ **The controller, drive unit and motor are precision devices, so do not drop or apply thumping vibration and strong impacts on them.**
- ⚠ **Store and use the units according to the environment conditions indicated in each specifications manual.**
- ⚠ **When disinfectants or insecticides must be used to treat wood packaging materials, always use methods other than fumigation (for example, apply heat treatment at the minimum wood core temperature of 56 °C for a minimum duration of 30 minutes (ISPM No. 15 (2009))).**

  If products such as units are directly fumigated or packed with fumigated wooden materials, halogen substances (including fluorine, chlorine, bromine and iodine) contained in fumes may contribute to the erosion of the capacitors. When exporting the products, make sure to comply with the laws and regulations of each country.
- ⚠ **Do not use the products in conjunction with any components that contain halogenated flame retardants (bromine, etc). Failure to observe this may cause the erosion of the capacitors.**
- ⚠ **Securely fix the motor to the machine. The motor could come off during operation if insecurely fixed.**
- ⚠ **Always install the motor with reduction gear in the designated direction. Failure to observe this could result in oil leaks.**
- ⚠ **Always install a cover, etc., over the shaft so that the rotary section of the motor cannot be touched during motor rotation.**
- ⚠ **When installing a coupling to the servomotor shaft end, do not apply impacts by hammering, etc. The encoder could be damaged.**
- ⚠ **Use a flexible coupling when connecting with a ball screw, etc., and keep the shaft core deviation smaller than the tolerable radial load of the shaft.**
- ⚠ **Do not use a rigid coupling as an excessive bending load will be applied on the shaft and could cause the shaft to break.**
- ⚠ **Do not apply a load exceeding the tolerable level onto the motor shaft. The shaft or bearing could be damaged.**
- ❗ **Before using this product after a long period of storage, please contact the Service Center.**
- ⚠ **Following the UN recommendations, battery units and batteries should be transported based on the international regulations such as those determined by International Civil Aviation Organization (ICAO), International Air Transport Association (IATA), International Maritime Organization (IMO) and U.S. Department of Transportation (DOT).**
- ⚠ **Due to ventilation problems, do not install the base units vertically or horizontally when C80 is mounted on a board, etc.**
- ⚠ **Install the basic base on a flat surface. Unevenness or warping of the surface can apply undue force to printed circuit boards and lead to operation failures.**
- ⚠ **Avoid installing the base units close to a vibration source, such as a large electromagnetic contactor or no-fuse breaker. Install them on a separate panel or at a safe distance.**
- ⚠ **To limit the effects of reflected noise and heat, leave 100mm(3.94inch) or more clearance to instruments fitted in front of CNC CPU (on the rear of the door). Similarly, leave 50mm(1.97inch) or more clearance between instruments and the left and right sides of the basic base.**

(3) Items related to wiring

⚠ CAUTION

⚠ **Correctly wire this product. Failure to observe this could result in motor runaway, etc.**

⚠ **Incorrect terminal connections could cause the devices to rupture or damage, etc.**

⚠ **Do not install a phase advancing capacitor, surge absorber or radio noise filter on the output side of the drive unit.**

⚠ **Correctly connect the output side (terminal U, V, W). The motor will not run properly if incorrectly connected.**

⚠ **Always install an AC reactor per each power supply unit.**

⚠ **Always install an appropriate breaker per each power supply unit. A breaker cannot be shared for multiple power supply units.**

⚠ **Do not directly connect a commercial power supply to the motor. Failure to observe this could result in faults.**

When using an inductive load such as relays, always connect a diode in parallel to the load as a noise countermeasure.

When using a capacitive load such as a lamp, always connect a protective resistor serially to the load to suppress rush currents.

⚠ **Do not mistake the direction of the surge absorption diode to be installed on the DC relay for the control output signal. If mistaken, the signal will not be output due to fault in the drive unit, and consequently the protective circuit, such as emergency stop, could be disabled.**

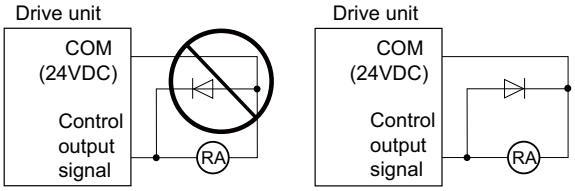

Do not connect or disconnect the cables between units while the power is ON.

⚠ **Do not connect or disconnect the PCBs while the power is ON.**

⚠ **Do not pull the cables when connecting/disconnecting them.**

⚠ **Securely tighten the cable connector fixing screw or fixing mechanism. The motor could come off during operation if insecurely fixed.**

Always treat the shield cables indicated in the Connection Manual with grounding measures such as cable clamps.

⚠ **Separate the signal wire from the drive line or power line when wiring.**

⚠ **Carry out wiring so that there is no possibility of short circuit between wires, nor of dangerous state.**

⚠ **Use wires and cables whose wire diameter, heat resistance level and bending capacity are compatible with the system.**

Ground the device according to the requirements of the country where the device is to be used.

⚠ **Wire the heat radiating fins and wires so that they do not contact.**

⚠ CAUTION

⚠ **When using the RS-232C device as a peripheral device, caution must be paid for connector connection/ disconnection. Always use a double-OFF type AC power supply switch on the device side, and connect/ disconnect the connector with the AC power supply on the device side OFF.**

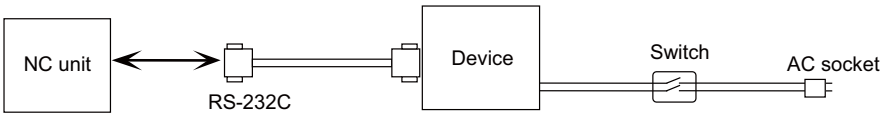

⚠ **Using a stabilized power supply without overcurrent protection may cause the unit's failure due to miswiring of 24V.**

⚠ **12V, 5V, and 3.3V output from connectors are to supply the power for dedicated peripheral devices. Do not use for other equipment to supply the power since we do not guarantee the NC operation by voltage down or noise sneaking.**

❗ **When using an inductive load such as a relay, always connect a diode in parallel to the load to prevent a counter-electromotive force.**

❗ **When the rush current exceeds the maximum output current, always connect a protective resistor serially to the load to suppress rush currents.**

⚠ **The wires from the surge absorber should be connected without extensions.**

⚠ **Be sure to ground the earth terminal FG and LG. Not doing so could result in electric shock or operation failure. (Ground resistance: 100Ω or less)**

⚠ **When wiring in the unit, be sure that it is done correctly by checking the product's rated voltage and the terminal layout. Connecting a power supply that is different from the rating or incorrectly wiring the product could result in fire or damage.**

⚠ **External connections shall be crimped or pressure welded with the specified tools, or correctly soldered. Imperfect connections could result in short circuit, fire, or operation failure.**

⚠ **Tighten the terminal screws within the specified torque range. If the terminal screws are loose, it could result in short circuit, fire, or operation failure. Tightening the terminal screws too far may cause damages to the screws and/or the module, resulting in drop, short circuit, or operation failure.**

⚠ **Be sure there are no foreign matters such as sawdust or wiring debris inside the module. Such debris could cause fire, damage, or operation failure.**

⚠ **The module has an ingress prevention label on its top to prevent foreign matter, such as wiring debris, from entering the module during wiring. Do not remove this label during wiring. Before starting system operation, be sure to remove this label because of heat dissipation.**

⚠ **When connecting to a personal computer and a unit with the USB interface, an electric shock or a unit failure may occur.**
Operate these correctly according to the manual of a unit and a personal computer.
Observe the following cautions when a personal computer in an AC power supply is used.
(1) For a personal computer that uses a 3-pin power plug or power plug with a ground lead type, make sure to use a plug socket including a ground input electrode or ground the earth lead, respectively.
And, ensure to ground a personal computer and a unit. (Ground resistance: 100Ω or less)
(2) For a personal computer that uses a 2-pin power plug without ground lead, make sure to connect the unit to the personal computer according to the following procedures. And, it is recommended to supply the same power supply line to a personal computer and the unit.

- **(a) Pull out the power plug of the personal computer from the AC outlet.**
- **(b) Confirm that the power plug of the personal computer has been pulled out from the AC outlet, and connect USB cables, the extension cable or the bus connection cable of a GOT.**
- **(c) Insert the power plug of the personal computer into the AC outlet.**

(4) Set up

⚠ WARNING

- **Do not cancel the emergency stop before confirming the basic operation.**
- **Always set the stroke end and stored stroke limit. Failure to set this could result in collision with the machine end.**

⚠ CAUTION

- **If the descriptions relating to the "restrictions" and "allowable conditions" conflict between this manual and the machine tool builder's instruction manual. the latter has priority over the former.**
- **The operations to which no reference is made in this manual should be considered "impossible".**
- **This manual is written on the assumption that all the applicable functions are included.**
  Some of them, however, may not be available for your NC system.
  Refer to the specifications issued by the machine tool builder before use.
- **Some screens and functions may differ depending on each NC system (or version), and some functions may not be possible. Please confirm the specifications before starting to use.**
- **If the battery low warning is issued, save the machining programs, tool data and parameters in an input/output device, and then replace the battery. When the battery alarm is issued, the machining programs, tool data and parameters may have been destroyed. Replace the battery and then reload the data.**
- **Do not adjust the spindle when possible risks associated with adjustment procedures are not thoroughly taken into consideration.**
- **Be careful when touching spindle's rotating section, or your hand may be caught in or cut.**
- **It is dangerous to restore the backup data of other machine when the absolute position is established because the zero point will be established with the absolute position of the linear axis rewritten, thus the zero point position is off the right position.**
  Initialize the zero point again.
- **Restoration by SRAM data is available only if the rotary axis motor has not rotated in a same direction 30,000 times or more since the acquisition of the data.**
  Otherwise, the zero point of the rotary axis will change by turning the power OFF and ON after writing the SRAM data, which will cause danger. Make sure the zero point is not off the right position.
  The use of this method should be limited to when necessary, such as when replacing an NC unit, and requires enough safety confirmation before executing.

(5) Operation and adjustments

⚠ CAUTION

- **If the operation start position is set in a block which is in the middle of the program and the program is started, the program before the set block is not executed. Please confirm that G and F modal and coordinate values are appropriate. If there are coordinate system shift commands or M, S, T and B commands before the block set as the start position, carry out the required commands using the MDI, etc. If the program is run from the set block without carrying out these operations, there is a danger of interference with the machine or of machine operation at an unexpected speed, which may result in breakage of tools or machine tool or may cause damage to the operators.**
- **Under the constant surface speed control (during G96 modal), if the axis targeted for the constant surface speed control moves toward the spindle center, the spindle rotation speed will increase and may exceed the allowable speed of the workpiece or chuck, etc. In this case, the workpiece, etc. may jump out during machining, which may result in breakage of tools or machine tool or may cause damage to the operators.**
- **Check and adjust programs and each parameter before starting operation. Failure to observe this could result in unpredictable operations depending on the machine.**
- **Do not make drastic adjustments or changes in the parameters as the operation could become unstable.**
- **In the explanation on bits, set all bits not used, including blank bits, to "0".**

(6) Usage

⚠ CAUTION

- ⚠ **Use C80 in an environment that meets the general specifications contained in this manual. Using C80 in an environment outside the range of the general specifications could result in electric shock, fire, operation failure, and damage to or deterioration of the product.**
- ⚠ **When mounting the module, be sure to insert the module fixing hook on the module's bottom into the module fixing hole on the base unit. Incorrect mounting could cause an operation failure or a damage/drop of the unit.**
- ⚠ **Hold down the module loading lever at the module bottom and securely insert the fixing hook into the fixing hole in the base unit. Install the module with the module fixing hole as a supporting point. Incorrect mounting could cause an operation failure or a damage/drop of the unit.**
- ⚠ **Be sure to fix all the modules with screws to prevent them from dropping. The fixing screws (M3 x 12) are to be prepared by user.**
- ⚠ **Tighten the screw in the specified torque range. Under tightening may cause a drop, short circuit or operation failure. Over tightening may cause a drop, short circuit or operation failure due to damage to the screw or module.**
- ⚠ **Be sure to install the extension cable to connectors of the basic base unit correctly. After installation, check them for looseness. Poor connections could cause an input or output failure.**
- ⚠ **Completely turn off all lines of external power supply used in the system before loading or unloading the module. Not doing so could result in electric shock or damage to the product.**
- ⚠ **Do not mount/dismount the modules or base over 50 times. Mounting/dismounting over 50 times may cause an operation failure.**
- ⚠ **Do not directly touch the module's conductive parts or electronic parts. Touching these parts could cause an operation failure or give damage to the module.**
- ⚠ **Do not touch the radiating fin of the CNC CPU module while an electric current is supplied or in a short while after the power OFF. Touching the fin may cause burns. Take care when removing the unit.**

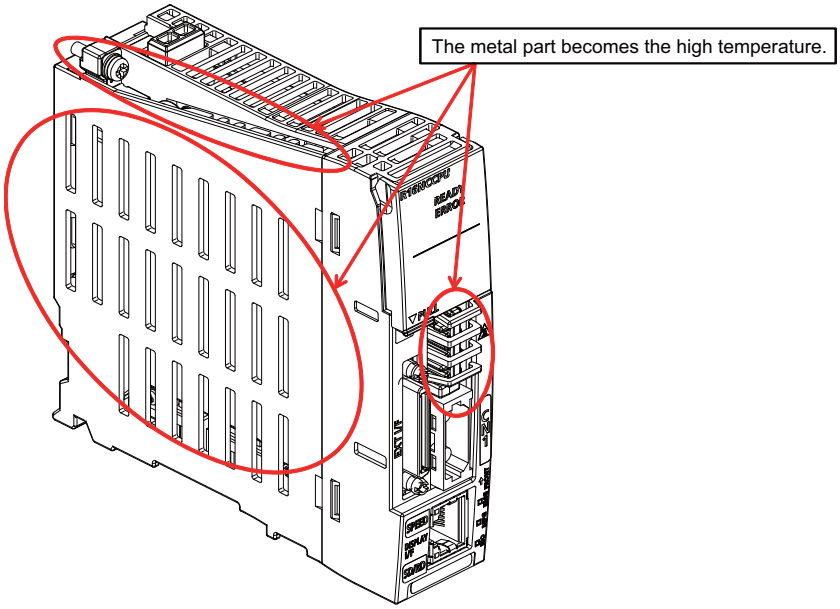

- ⚠ **When removing the unit, always remove the fixing screws and then take the fixing hook out from the fixing hole. Incorrect removal will damage the module fixing hook.**
- ⚠ **When the module fixing screws are used, remove the screws first and module from the base unit. Failure to do so may damage the module.**
- ⚠ **The module surface temperature may be high immediately after power-off. When the module is removed, pay attention to the burn injury.**
- ❗ **Install an external emergency stop circuit so that the operation can be stopped and the power turns OFF immediately when unforeseen situation occurs. A contactor, etc., is required in addition to the shutoff function mounted in the controller.**
- ⚠ **Turn OFF the power immediately if any smoke, abnormal noise or odor is generated from the controller, drive unit or motor.**

⚠ CAUTION

Only a qualified technician may disassemble or repair this product.

Do not alter.

Use a noise filter, etc. to reduce the effect of electromagnetic disturbances in the case where electromagnetic disturbances could adversely affect the electronic devices used near the drive unit.

Use the drive unit, motor and each regenerative resistor with the designated combination. Failure to observe this could result in fires or faults.

The combination of the motor and drive unit that can be used is determined. Be sure to check the models of motor and drive unit before test operation.

The brakes (electromagnetic brakes) mounted in the servomotor are used for the purpose of holding, and must not be used for normal braking. Also, do not run the motor with the motor brake applied. Motor brake is used for the purpose of holding.

For the system running via a timing belt, install a brake on the machine side so that safety can be ensured.

Be sure to confirm SERVO OFF (or READY OFF) when applying the electromagnetic brake. Also, be sure to confirm SERVO ON prior to releasing the brake.

When using the DC OFF type electromagnetic brake, be sure to install a surge absorber on the brake terminal.

Do not connect or disconnect the cannon plug while the electromagnetic brake's power is ON. The cannon plug pins could be damaged by sparks.

After changing programs/parameters, or after maintenance/inspection, always carry out a test operation before starting actual operation.

Use the power that are complied with the power specification conditions (input voltage, input frequency, tolerable time for instantaneous power interruption) indicated in each specifications manual.

When making encoder cables, do not mistake connection. Failure to observe this could result in malfunction, runaway or fire.

(7) Troubleshooting

⚠ CAUTION

Use a motor with electromagnetic brakes or establish an external brake mechanism for the purpose of holding; this serves as countermeasures for possible hazardous situation caused by power failure or product fault.

Use a double circuit structure for the electromagnetic brake's operation circuit so that the brakes will activate even when the external emergency stop signal is issued.

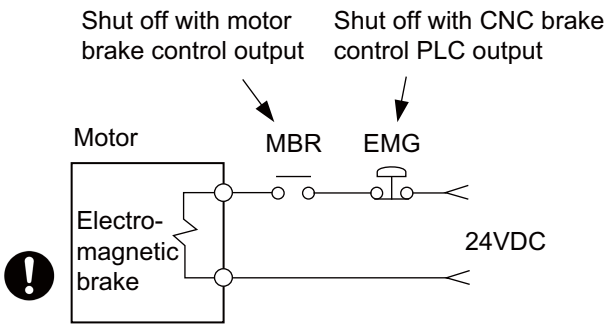

The machine could suddenly restart when the power is restored after an instantaneous power failure, so stay away from the machine. (Design the machine so that the operator safety can be ensured even if the machine restarts.)

To secure the absolute position, do not shut off the servo drive unit's control power supply when its battery voltage drops (warning 9F) in the servo drive unit side.

If the battery voltage drop warning alarm occurs in the controller side, make sure to back up the machining programs, tool data and parameters, etc. with the input/output device before replacing the battery. Depending on the level of voltage drop, memory loss could have happened. In that case, reload all the data backed up before the alarm occurrence.

(8) Maintenance, inspection and part replacement

⚠ CAUTION

- **Periodically back up the programs, tool data and parameters to avoid potential data loss. Also, back up those data before maintenance and inspections.**
- **The electrolytic capacitor's capacity will drop due to deterioration. To prevent secondary damage due to capacitor's faults, Mitsubishi recommends the electrolytic capacitor to be replaced approx. every five years even when used in a normal environment. Contact the Service Center for replacements.**
- **Do not perform a megger test (insulation resistance measurement) during inspection.**
- **Do not replace parts or devices while the power is ON.**
- **Do not short-circuit, charge, overheat, incinerate or disassemble the battery.**
- **Be careful not to break the heat radiating fins during maintenance or replacement.**

(9) Disposal

⚠ CAUTION

- **Take the batteries, etc., off from the controller, drive unit and motor, and dispose of them as general industrial wastes.**
- **Do not alter or disassemble controller, drive unit, or motor.**
- **Collect and dispose of the spent batteries according to the local laws.**

(10) General precautions

To explain the details, drawings given in the instruction manual, etc., may show the unit with the cover or safety partition removed. When operating the product, always place the cover or partitions back to their original position, and operate as indicated in the instruction manual, etc.

Treatment of waste

The following two laws will apply when disposing of this product. Considerations must be made to each law. The following laws are in effect in Japan. Thus, when using this product overseas, the local laws will have a priority. If necessary, indicate or notify these laws to the final user of the product.

(1) Requirements for "Law for Promotion of Effective Utilization of Resources"
   (a) Recycle as much of this product as possible when finished with use.
   (b) When recycling, often parts are sorted into steel scraps and electric parts, etc., and sold to scrap contractors. Mitsubishi recommends sorting the product and selling the members to appropriate contractors.

(2) Requirements for "Law for Treatment of Waste and Cleaning"
   (a) Mitsubishi recommends recycling and selling the product when no longer needed according to item (1) above. The user should make an effort to reduce waste in this manner.
   (b) When disposing a product that cannot be resold, it shall be treated as a waste product.
   (c) The treatment of industrial waste must be commissioned to a licensed industrial waste treatment contractor, and appropriate measures, including a manifest control, must be taken.
   (d) Batteries correspond to "primary batteries", and must be disposed of according to local disposal laws.

Disposal

(Note) This symbol mark is for EU countries only.
This symbol mark is according to the directive 2006/66/EC Article 20 Information for end-users and Annex II.

Your MITSUBISHI ELECTRIC product is designed and manufactured with high quality materials and components which can be recycled and/or reused.
This symbol means that batteries and accumulators, at their end-of-life, should be disposed of separately from your household waste.
If a chemical symbol is printed beneath the symbol shown above, this chemical symbol means that the battery or accumulator contains a heavy metal at a certain concentration. This will be indicated as follows:
Hg: mercury (0,0005%), Cd: cadmium (0,002%), Pb: lead (0,004%)
In the European Union there are separate collection systems for used batteries and accumulators.
Please, dispose of batteries and accumulators correctly at your local community waste collection/recycling centre.

Please, help us to conserve the environment we live in!

Trademarks

MELDAS, MELSEC, EZSocket, EZMotion, iQ Platform, MELSEC iQ-R, MELSOFT, GOT, CC-Link, CC-Link/LT, CC-Link IE, CC-Link IE/field, EcoMonitorLight and SLMP are either trademarks or registered trademarks of Mitsubishi Electric Corporation in Japan and/or other countries.

Ethernet is a registered trademark of Xerox Corporation in the United States and/or other countries.
Microsoft®, Windows®, SQL Server® and Access® are either trademarks or registered trademarks of Microsoft Corporation in the United States and/or other countries.
SD logo and SDHC logo are either registered trademarks or trademarks of LLC.
UNIX is a registered trademark of The Open Group in the United States and/or other countries.
Intel® and Pentium® are either trademarks or registered trademarks of Intel Corporation in the United States and/or other countries.
MODBUS® is either a trademark or a registered trademark of Schneider Electric USA, Inc. or the affiliated companies in Japan and/or other countries.
EtherNet/IP is a trademark of Open DeviceNet Vendor Association,Inc.
PROFIBUS-DP and PROFINET are either trademarks of Profibus International.
Oracle® is a registered trademark of Oracle Corporation, the subsidiaries, or the affiliated companies in the United States and /or other countries.
VNC is a registered trademark of RealVNC Ltd. in the United States and other countries.

Other company and product names that appear in this manual are trademarks or registered trademarks of the respective companies.

本製品の取扱いについて

(日本語 /Japanese)
本製品は工業用 (クラス A) 電磁環境適合機器です。販売者あるいは使用者はこの点に注意し、住商業環境以外での使用をお願いいたします。

Handling of our product

(English)
This is a class A product. In a domestic environment this product may cause radio interference in which case the user may be required to take adequate measures.

본 제품의 취급에 대해서

(한국어 /Korean)
이 기기는 업무용 (A 급) 전자파적합기기로서 판매자 또는 사용자는 이 점을 주의하시기 바라며 가정외의 지역에 서 사용하는 것을 목적으로 합니다 .

Contents

1

System Basic Configuration

1.1 System Basic Configuration Drawing

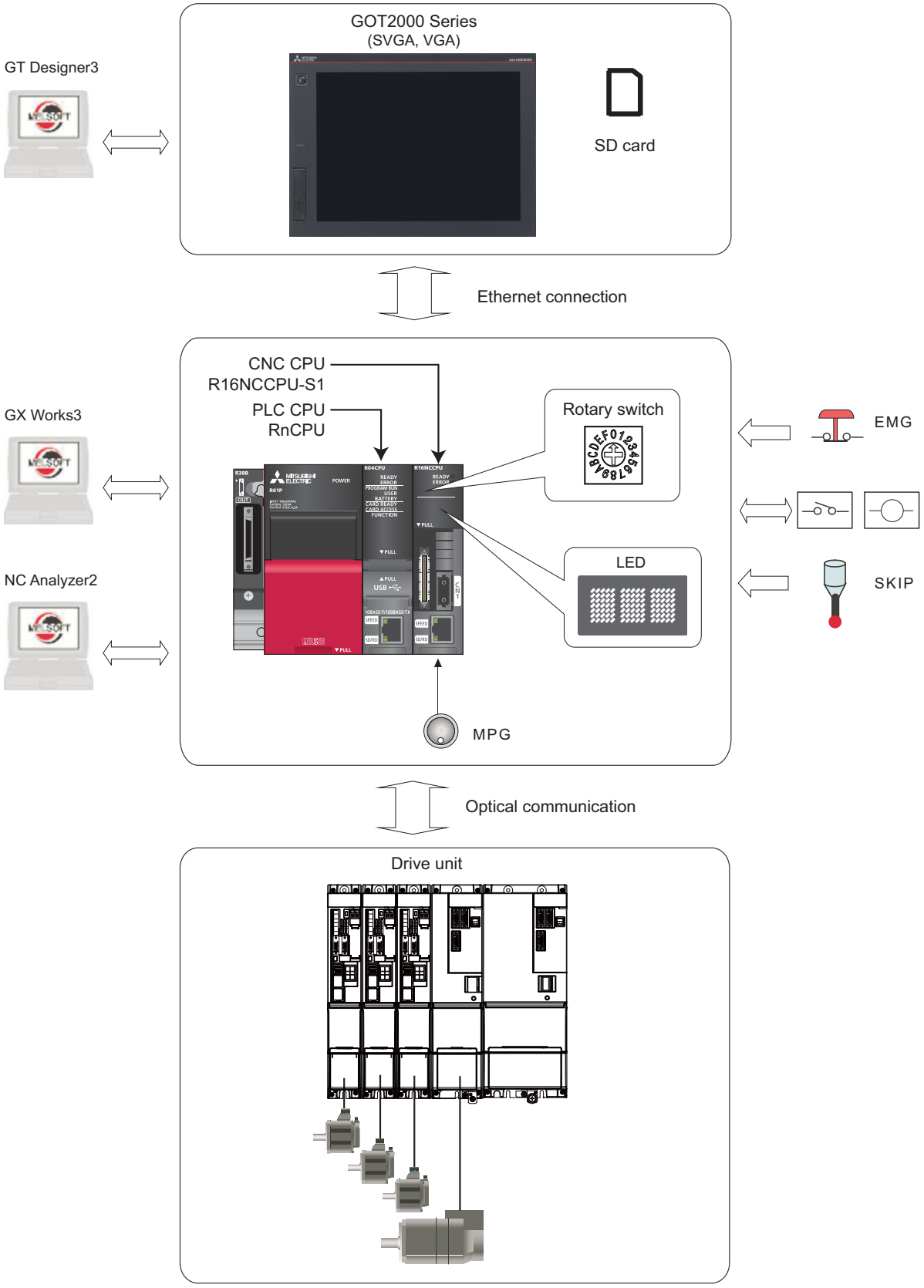

(Note) The supported versions of the GT Designer3 are as follows:
SVGA: Version 1.155M or later
VGA: Version 1.165X or later
GX Works3 Version 1.025B or later is required.

2

General Connection Diagram

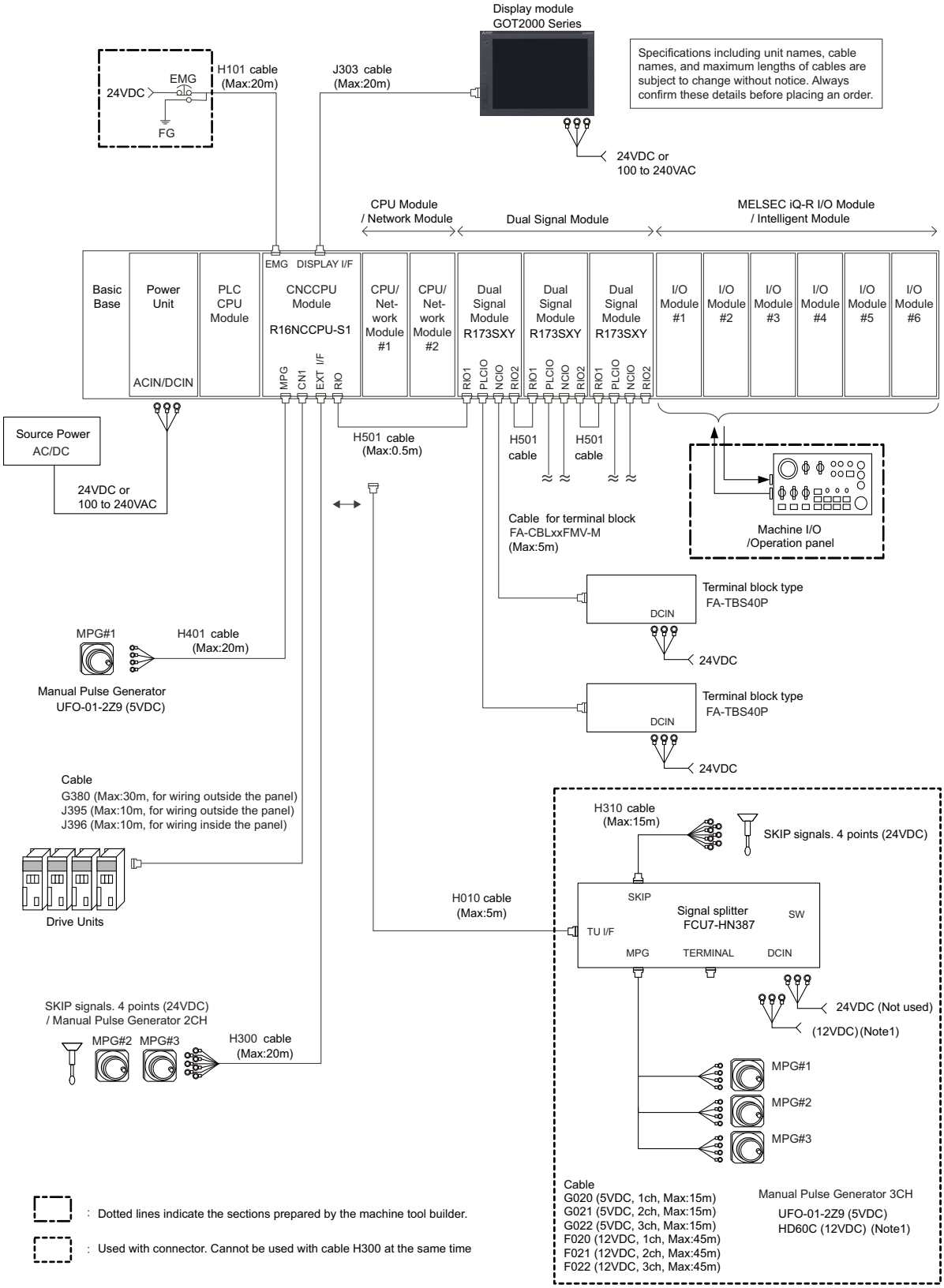

(Note 1) HD60C (12VDC) requires another power source 12VDC.

(Note 2) A CPU module can be mounted on the CPU slot of the base unit or the slot No. 0 to 6. A slot between CPU modules can be left empty for reservation. Note that you cannot mount an I/O module or intelligent function module on a slot between CPU modules.

3

List of Configuration

3.1 CNC Control Unit

(1) Basic base

Model name	Remarks	Reference
R35B	5 slots: for mounting MELSEC iQ-R series module	MELSEC iQ-R Module Configuration Manual (SH(NA)-081262)
R38B	8 slots: for mounting MELSEC iQ-R series module	
R312B	12 slots: for mounting MELSEC iQ-R series module	

(2) Power supply

Model name	Remarks	Reference
R61P	AC power supply module input: AC100 to 240V, output: DC5V/6.5A	MELSEC iQ-R Module Configuration Manual (SH(NA)-081262)
R62P	AC power supply module input: AC100 to 240V, output: DC5V/3.5A, DC24V/0.6A	
R63P	DC power supply module input: DC24V, output: DC5V/6.5A	
R64P	AC power supply module input: AC100 to 240V, output: DC5V/9A	

(3) PLC CPU

Model name	Remarks	Reference
R04CPU	Program capacity: 40k steps, Elementary operation processing speed (LD command): 0.98ns	MELSEC iQ-R CPU Module User's Manual (Startup) (SH(NA)-081263) MELSEC iQ-R CPU Module User's Manual (Application) (SH(NA)-081264)
R08CPU	Program capacity: 80k steps, Elementary operation processing speed (LD command): 0.98ns	
R16CPU	Program capacity: 160k steps, Elementary operation processing speed (LD command): 0.98ns	
R32CPU	Program capacity: 320k steps, Elementary operation processing speed (LD command): 0.98ns	
R120CPU	Program capacity: 1200k steps, Elementary operation processing speed (LD command): 0.98ns	

(4) CNC CPU module

Model name	Remarks
R16NCCPU-S1	CNC CPU module

(5) Input module

(a) AC

Model name	Remarks	Reference
RX10	AC input: 16 points, AC100 to 120V (50/60Hz)	MELSEC iQ-R I/O Module User's Manual (SH(NA)-081247)

(b) DC (positive/negative common type)

Model name	Remarks	Reference
RX40C7	DC input: 16 points, DC24V, 7.0mA	MELSEC iQ-R I/O Module User's Manual (SH(NA)-081247)
RX41C4	DC input: 32 points, DC24V, 4.0mA	
RX42C4	DC input: 64 points, DC24V, 4.0mA	
RX41C4-TS	DC input, 32 points, DC24V, 4.0mA, Spring clamp terminal block	

(6) Analog input module

(a) Voltage input module

Model name	Remarks	Reference
R60ADV8	Voltage input module: 8CH DC-10 to 10V/-32000 to 32000 80μs/CH	MELSEC iQ-R Analog-Digital Converter Module User's Manual (Startup) (SH(NA)-081232) MELSEC iQ-R Analog-Digital Converter Module User's Manual (Application) (SH(NA)-081233)

(b) Current input module

Model name	Remarks	Reference
R60ADI8	Current input module: 8CH DC0 to 20mA/0 to 32000 80μs/CH	MELSEC iQ-R Analog-Digital Converter Module User's Manual (Startup) (SH(NA)-081232) MELSEC iQ-R Analog-Digital Converter Module User's Manual (Application) (SH(NA)-081233)

(c) Voltage/current input module

Model name	Remarks	Reference
R60AD4	Voltage/current input module: 4CH DC-10 to 10V/-32000 to 32000、DC0 to 20mA/0 to 32000 80μs/CH	MELSEC iQ-R Analog-Digital Converter Module User's Manual (Startup) (SH(NA)-081232) MELSEC iQ-R Analog-Digital Converter Module User's Manual (Application) (SH(NA)-081233)

(7) Output module

(a) Relay

Model name	Remarks	Reference
RY10R2	Relay output: 16 points, DC24V/2A, AC240V/2A	MELSEC iQ-R I/O Module User's Manual (SH(NA)-081247)

(b) Triac

Model name	Remarks	Reference
RY20S6	Triac output, 16 points: 100-240 VAC / 0.6A	MELSEC iQ-R I/O Module User's Manual (SH(NA)-081247)

(c) Transistor (sink type)

Model name	Remarks	Reference
RY40NT5P	Transistor (sink type) output: 16 points, DC12 to 24V, 0.5A	MELSEC iQ-R I/O Module User's Manual (SH(NA)-081247)
RY41NT2P	Transistor (sink type) output: 32 points, DC12 to 24V, 0.2A	
RY42NT2P	Transistor (sink type) output: 64 points, DC12 to 24V, 0.2A	

(d) Transistor (independent)

Model name	Remarks	Reference
RY40PT5P	Transistor (source type) output: 16 points, DC12 to 24V, 0.5A	MELSEC iQ-R I/O Module User's Manual (SH(NA)-081247)
RY41PT1P	Transistor (source type) output: 32 points, DC12 to 24V, 0.1A	
RY42PT1P	Transistor (source type) output: 64 points, DC12 to 24V, 0.1A	
RY41PT1P-TS	Transistor (source type) output: 32 points, DC12 to 24V, 0.1A, Spring clamp terminal block	

(8) Analog output module

Voltage output module

Model name	Remarks	Reference
R60DAV8	Voltage output module: 8CH -32000 to 32000/DC-10 to 10V 80μs/CH	MELSEC iQ-R Digital-Analog Converter Module User's Manual (Startup) (SH(NA)-081235) MELSEC iQ-R Digital-Analog Converter Module User's Manual (Application) (SH(NA)-081237)

(b) Current output module

Model name	Remarks	Reference
R60DAI8	Current input module: 8CH 0 to 32000/DC0 to 20mA 80μs/CH	MELSEC iQ-R Digital-Analog Converter Module User's Manual (Startup) (SH(NA)-081235) MELSEC iQ-R Digital-Analog Converter Module User's Manual (Application) (SH(NA)-081237)

(c) Voltage/current output module

Model name	Remarks	Reference
R60DA4	Voltage/current input module: 4CH DC-10 to 10V/-32000 to 32000、DC0 to 20mA/0 to 32000 80μs/CH	MELSEC iQ-R Digital-Analog Converter Module User's Manual (Startup) (SH(NA)-081235) MELSEC iQ-R Digital-Analog Converter Module User's Manual (Application) (SH(NA)-081237)

(9) Temperature adjustment

(a) Thermocouple

Model name	Remarks	Reference
R60TCTRT2TT2 (R60TCTT4)	4 channels Thermocouple (K,J,T,B,S,E,R,N,U,L,PL Ⅱ ,W5Re/W26Re) Platinum RTD (Pt100,JPt100) Without heater disconnection detection Sampling period: 250ms/4channels, 500ms/4channels 18-point terminal block Channels are isolated Heating and cooling control	Temperature Control Module User's Manual (Startup) (SH(NA)-081535) Temperature Control Module User's Manual (Application) (SH(NA)-081536)
R60TCTRT2TT2BW (R60TCTT4BW)	4 channels Thermocouple (K,J,T,B,S,E,R,N,U,L,PL Ⅱ ,W5Re/W26Re) Platinum RTD (Pt100,JPt100) With heater disconnection detection Sampling period: 250ms/4channels, 500ms/4channels 2 units of 18-point terminal block Channels are isolated Heating and cooling control	

(b) Platinum RTD

Model name	Remarks	Reference
R60TCRT4	4 channels Platinum RTD (Pt100,JPt100) Without heater disconnection detection Sampling period: 250ms/4channels, 500ms/4channels 18-point terminal block Channels are isolated Heating and cooling control	Temperature Control Module User's Manual (Startup) (SH(NA)-081535) Temperature Control Module User's Manual (Application) (SH(NA)-081536)
R60TCRT4BW	4 channels Platinum RTD (Pt100,JPt100) With heater disconnection detection Sampling period: 250ms/4channels, 500ms/4channels 2 units of 18-point terminal block Channels are isolated Heating and cooling control	

(10) High-speed counter module

Model name	Remarks	Reference
RD62P2	DC5/12/24V, input: 2CH Maximum counting speed: 200kpulse/s External output: transistor (sink type)	MELSEC iQ-R High-Speed Counter Module User's Manual (Startup) (SH(NA)-081239) MELSEC iQ-R High-Speed Counter Module User's Manual (Application) (SH(NA)-081241)
RD62D2	Differential-input: 2CH Maximum counting speed: 8Mpulse/s External output: transistor (sink type)	
RD62P2E	DC5/12/24V, input: 2CH Maximum counting speed: 200kpulse/s External output: transistor (source type)	

(11) Ethernet

Model name	Remarks	Reference
RJ71EN71	1Gbps/100Mbps/10Mbps: 2 ports Multi-network supported (Ethernet/CC-Link IE Field Network, CC-Link IE Controller Network (twisted pair cable))	MELSEC iQ-R Ethernet/CC-Link IE User's Manual (Startup) (SH(NA)-081256) MELSEC iQ-R Ethernet User's Manual (Application) (SH(NA)-081257) MELSEC iQ-R CC-Link IE Controller Network User's Manual (Application) (SH(NA)-081258) MELSEC iQ-R CC-Link IE Field Network User's Manual (Application) (SH(NA)-081259)

(12) Serial communication

Model name	Remarks	Reference
RJ71C24	Max. 230.4kbps RS-232:1CH、RS-422/485:1CH	MELSEC iQ-R Serial Communication Module User's Manual (Startup) (SH(NA)-081250) MELSEC iQ-R Serial Communication Module User's Manual (Application) (SH(NA)-081251)
RJ71C24-R2	Max. 230.4kbps RS-232:2CH	
RJ71C24-R4	Max. 230.4kbps RS-422/485:2CH	

(13) MES interface module

Model name	Remarks	Reference
RD81MES96	1000BASE-T/100BASE-TX/10BASE-T Database dynamic link (MX ME Interface-R is separately required.)	MELSEC iQ-R MES Interface Module User's Manual (Startup) (SH(NA)-081422) MELSEC iQ-R MES Interface Module User's Manual (Application) (SH(NA)-081423)

(14) CC-Link

Model name	Remarks	Reference
RJ61BT11	Max. 10Mbps master/local station CC-Link Ver.2 supported	MELSEC iQ-R CC-Link System Master/Local Module User's Manual (Startup) (SH(NA)-081269) MELSEC iQ-R CC-Link System Master/Local Module User's Manual (Application) (SH(NA)-081270)

(15) CC-Link IE controller network

Model name	Remarks	Reference
RJ71GP21-SX	1Gbps optical fiber cable control/normal station	MELSEC iQ-R Ethernet/CC-Link IE User's Manual (Startup) (SH(NA)-081256) MELSEC iQ-R CC-Link IE Controller Network User's Manual (Application) (SH(NA)-081258)

(16) CC-Link IE Field Network

Model name	Remarks	Reference
RJ71GF11-T2	1Gbps master/local station	MELSEC iQ-R Ethernet/CC-Link IE User's Manual (Startup) (SH(NA)-081256) MELSEC iQ-R CC-Link IE Field Network User's Manual (Application) (SH(NA)-081259)

(17) Extension base

Model name	Remarks	Reference
R65B	5 slots: for mounting MELSEC iQ-R series module	MELSEC iQ-R Module Configuration Manual (SH(NA)-081262)
R68B	8 slots: for mounting MELSEC iQ-R series module	
R612B	12 slots: for mounting MELSEC iQ-R series module	

(18) RQ extension base

Model name	Remarks	Reference
RQ65B	5 slots: for mounting MELSEC Q series module	MELSEC iQ-R Module Configuration Manual (SH(NA)-081262)
RQ68B	8 slots: for mounting MELSEC Q series module	
RQ612B	12 slots: for mounting MELSEC Q series module	

(19) Spring clamp terminal block

Model name	Remarks	Reference
Q6TE-18SN	For 16 points I/O modules, 0.3 to 1.5mm^2 (AWG22 to 16)	I/O Module Type Building Block User's Manual (SH(NA)-080042)

(20) Connector/terminal block converter module

Model name	Remarks	Reference
A6TBX70	For positive common type input modules (3-wire type)	I/O Module Type Building Block User's Manual (SH(NA)-080042)
A6TBXY36	For positive common type input modules and sink type output modules (standard type)	
A6TBXY54	For positive common type input modules and sink type output modules (2-wire type)	

(21) Cable

(a) Cables for CNC CPU

Cable type	Application	Max. length	Standard cable length (m)	Remarks
F020	Manual pulse generator: 1ch	45m	0.5, 1, 2, 3, 5, 7, 10, 15, 20	12V power supply type can be used. For Signal splitter
F021	Manual pulse generator: 2ch	45m	0.5, 1, 2, 3, 5, 7, 10, 15, 20	
F022	Manual pulse generator: 3ch	45m	0.5, 1, 2, 3, 5, 7, 10, 15, 20	
G020	Manual pulse generator: 1ch	15m	0.5, 1, 2, 3, 5, 7, 10, 15	5V power supply type can be used. For Signal splitter
G021	Manual pulse generator: 2ch	15m	0.5, 1, 2, 3, 5, 7, 10, 15	
G022	Manual pulse generator: 3ch	15m	0.5, 1, 2, 3, 5, 7, 10, 15	
H010	Signal splitter connection	5m	0.5, 1, 2, 3, 5	
H101	Emergency stop	20m	0.5, 1, 2, 3, 5, 7, 10, 15, 20	
H300	SKIP/manual pulse generator input	20m	0.5, 1, 2, 3, 5, 7, 10, 15, 20	
H310	SKIP connection	15m	0.5, 1, 2, 3, 5, 7, 10, 15	For Signal splitter
H401	Manual pulse generator: 1ch for 5V	20m	0.5, 1, 2, 3, 5, 7, 10, 15, 20	
H501	Dual-signal module communication	0.5m	0.1, 0.2, 0.3, 0.5	
J303	Display module communication (Straight)	20m	1, 2, 3, 5, 7, 10, 15, 20	

(Note) The Standard cable length column shows the lengths of the cable available from MITSUBISHI.

(b) Cable for connector and terminal block changeover unit

Model name	Remarks	Reference
AC05TB	For A6TBXY36/A6TBXY54/A6TBX70 (positive common/sink type modules) 0.5m	I/O Module Type Building Block User's Manual (SH(NA)-080042)
AC10TB	For A6TBXY36/A6TBXY54/A6TBX70 (positive common/sink type modules) 1m	
AC20TB	For A6TBXY36/A6TBXY54/A6TBX70 (positive common/sink type modules) 2m	
AC30TB	For A6TBXY36/A6TBXY54/A6TBX70 (positive common/sink type modules) 3m	
AC50TB	For A6TBXY36/A6TBXY54/A6TBX70 (positive common/sink type modules) 5m	
AC80TB	For A6TBXY36/A6TBXY54/A6TBX70 (positive common/sink type modules) 8m (Common current not exceeding 0.5A)	
AC100TB	For A6TBXY36/A6TBXY54/A6TBX70 (positive common/sink type modules) 10m (Common current not exceeding 0.5A)	

(c) Cable for drive unit

Cable type	Application	Max. length	Standard cable length (m)
CNP2E-1-xM	Motor side PLG cable Spindle side accuracy encoder TS5690 cable	30m	2, 3, 4, 5, 7, 10, 15, 20, 25, 30
CNP3EZ-2P-xM	Spindle side encoder cable OSE-1024 cable	30m	2, 3, 4, 5, 7, 10, 15, 20, 25, 30
CNP3EZ-3P-xM	Spindle side encoder cable OSE-1024 cable	30m	2, 3, 4, 5, 7, 10, 15, 20, 25, 30
CNV2E-8P-xM	Motor side encoder cable for HG/HG-H, HQ/HQ-H (For D48/D51/D74)	30m	2, 3, 4, 5, 7, 10, 15, 20, 25, 30
CNV2E-9P-xM	Motor side encoder cable for HG/HG-H, HQ/HQ-H (For D48/D51/D74)	30m	2, 3, 4, 5, 7, 10, 15, 20, 25, 30
CNV2E-D-xM	MDS-B-SD unit cable	30m	2, 3, 4, 5, 7, 10, 15, 20, 25, 30
CNV2E-HP-xM	MDS-B-HR unit cable	30m	2, 3, 4, 5, 7, 10, 15, 20, 25, 30
DG30-xM	Battery cable (drive unit - battery box, drive unit - drive unit)	10m	0.3, 0.5, 1, 2, 3, 5, 7, 10
G380 LxM	Optical communication cable for wiring between drive units (outside panel)	30m	5, 10, 12, 15, 20, 25, 30
J395 LxM	Optical communication cable for wiring between drive units (outside panel) for wiring between NC-drive units	10m	3, 5, 7, 10
J396 LxM	Optical communication cable for wiring between drive units (inside panel)	10m	0.2, 0.3, 0.5, 1, 2, 3, 5
MR-BKS1CBLxMA1-H	<200V Series> Brake cable for HG96 Lead out in direction of motor shaft	10m	2, 3, 5, 7, 10
MR-BKS1CBLxMA2-H	<200V Series> Brake cable for HG96 Lead out in opposite direction of motor shaft	10m	2, 3, 5, 7, 10
MR-BT6V2CBL LxM	Battery cable (MDS-EJ/EJH) (drive unit - drive unit)	1m	0.3, 1
MR-D05UDL3M-B	STO cable	3m	3
MR-PWS1CBLxMA1-H	<200V Series> Power cable for HG96 Lead out in direction of motor shaft	10m	2, 3, 5, 7, 10
MR-PWS1CBLxMA2-H	<200V Series> Power cable for HG96 (Note) It can not be used with HF-KP13. Lead out in opposite direction of motor shaft	10m	2, 3, 5, 7, 10
SH21 LxM	Power supply communication cable Power backup unit communication cable	30m	0.35, 0.5, 1, 2, 3

(Note 1) The Standard cable length column shows the lengths of the cable available from MITSUBISHI.
(Note 2) "x" in type columns indicate cable length (unit: m).

(22) Relay terminal unit

(a) Unit

Model name	Remarks	Reference
A6TE2-16SRN	40 pin connector For 24VDC Transistor output unit (sink type module)	Relay Terminal Module User's Manual (Hardware) A6TE2-16SRN (IB(NA)-66833)

(b) Cable

Model name	Remarks	Reference
AC06TE	For A6TE2-16SRN 0.6m For 32 points (1 connector), one of this cable and two units of the relay terminal unit are used	Relay Terminal Module User's Manual (Hardware) A6TE2-16SRN (IB(NA)-66833)
AC10TE	For A6TE2-16SRN 1m For 32 points (1 connector), one of this cable and two units of the relay terminal unit are used	
AC30TE	For A6TE2-16SRN 3m For 32 points (1 connector), one of this cable and two units of the relay terminal unit are used	
AC50TE	For A6TE2-16SRN 5m For 32 points (1 connector), one of this cable and two units of the relay terminal unit are used	
AC100TE	For A6TE2-16SRN 10m For 32 points (1 connector), one of this cable and two units of the relay terminal unit are used	

(23) Extension cable

Model name	Remarks	Reference
RC06B	0.6m cable for connecting the extension base/the RQ extension base with the basic base	MELSEC iQ-R Module Configuration Manual (SH(NA)-081262)
RC12B	1.2m cable for connecting the extension base/the RQ extension base with the basic base	
RC30B	3m cable for connecting the extension base/the RQ extension base with the basic base	
RC50B	5m cable for connecting the extension base/the RQ extension base with the basic base	

(24) Connector

Model name	Remarks	Reference
A6CON1	Soldering type 32 point-connector (40-pin connector)	I/O Module Type Building Block User's Manual (SH(NA)-080042)
A6CON2	Crimp-contact type 32 point-connector (40-pin connector)	
A6CON3	Flat cable pressure displacement type 32-point connector (40-pin connector)	
A6CON4	Soldering type 32 point-connector (40-pin connector; two-way cable can be mounted)	

(25) CC-Link Remote I/O unit

(a) Thread terminal block type

Model name	Remarks	Reference
AJ65SBTB1-16D	Input 16 points: 24VDC (positive/negative common shared type), 1-wire, terminal block type, response time: 1.5 ms	CC-Link System Compact Type Remote I/O Module User's Manual (SH(NA)-4007)
AJ65SBTB1-32D	Input 32 points: 24VDC (positive/negative common shared type), 1-wire, terminal block type, response time: 1.5 ms	
AJ65SBTB1-16TE	Output 16 points: 12/24VDC (0.1A), transistor output (source type), 1-wire, terminal block type	
AJ65SBTB1-32TE1	Output 32 points: 12/24VDC (0.5A), transistor output (source type), 1-wire, terminal block type	

(b) Waterproof connector type

Model name	Remarks	Reference
AJ65FBTA4-16DE	Input 16 points: 24VDC (negative common), 4-wire, super-slim waterproof type, response time: 1.5 ms	CC-Link System Compact Type Remote I/O Module User's Manual (SH(NA)-4007)
AJ65FBTA2-16TE	Output 16 points: 12/24VDC (1.0A), transistor output (source type), 2-wire, super-slim waterproof type	

(26) I/O mixed unit

(a) DC input/transistor output

Model name	Remarks	Reference
RH42C4NT2P	DC input: 32 points, DC24V, 4.0mA Transistor (sink type) output: 32 points, DC12 to 24V, 0.2A	MELSEC iQ-R I/O Module User's Manual (SH(NA)-081247)

(27) SD memory card

Model name	Remarks	Reference
NZ1MEM-2GBSD	2G byte	MELSEC iQ-R Module Configuration Manual (SH(NA)-081262)

(28) Extended SRAM cassette

Model name	Remarks	Reference
NZ2MC-1MBS	1M byte	MELSEC iQ-R Module Configuration Manual (SH(NA)-081262)

3.2 GOT

3.2.1 GT27

(1) GOT

(a) GT2715

Model name	Remarks	Reference
GT2715-XTBA	15-type XGA [1024×768 dots] TFT color liquid crystal display, 65536 colors <Multimedia and video/RGB and multi-touch supported> 100-240VAC, user memory, storage memory (ROM):57MB, operation memory (RAM): 128MB ・Requiring GT Designer3 Version(GOT2000) 1.117X or later.	GT27 General Description (IB(NA)-0800502)

(b) GT2712

Model name	Remarks	Reference
GT2712-STBA	12.1-type SVGA [800×600 dots] TFT color liquid crystal display, 65536 colors <Multimedia and video/RGB and multi-touch supported> 100-240VAC, user memory, storage memory (ROM):57MB, operation memory (RAM): 128MB ・Requiring GT Designer3 Version1 (GOT2000) 1.155M or later.	GT27 General Description (IB(NA)-0800502)
GT2712-STBD	12.1-type SVGA [800×600 dots] TFT color liquid crystal display, 65536 colors <Multimedia and video/RGB and multi-touch supported> 24VDC, user memory, storage memory (ROM): 57MB, operation memory (RAM): 128MB ・Requiring GT Designer3 Version1 (GOT2000) 1.155M or later.	

(c) GT2710

Model name	Remarks	Reference
GT2710-STBA	10.4-type SVGA [800×600 dots] TFT color liquid crystal display, 65536 colors <Multimedia and video/RGB and multi-touch supported> 100-240VAC, user memory, storage memory (ROM):57MB, operation memory (RAM): 128MB ・Requiring GT Designer3 Version1 (GOT2000) 1.155M or later.	GT27 General Description (IB(NA)-0800502)
GT2710-STBD	10.4-type SVGA [800×600 dots] TFT color liquid crystal display, 65536 colors <Multimedia and video/RGB and multi-touch supported> 24VDC, user memory, storage memory (ROM): 57MB, operation memory (RAM): 128MB ・Requiring GT Designer3 Version1 (GOT2000) 1.155M or later.	
GT2710-VTBA	10.4-type VGA ［640×480 dots] TFT color liquid crystal display, 65536 colors <Multimedia and video/RGB and multi-touch supported> 100-240VAC, user memory, storage memory (ROM):57MB, operation memory (RAM): 128MB ・Requiring GT Designer3 Version1 (GOT2000) 1.165X or later.	GT27 General Description (IB(NA)-0800502)
GT2710-VTBD	10.4-type VGA ［640×480 dots] TFT color liquid crystal display, 65536 colors <Multimedia and video/RGB and multi-touch supported> 24VDC, user memory, storage memory (ROM): 57MB, operation memory (RAM): 128MB ・Requiring GT Designer3 Version1 (GOT2000) 1.165X or later.	

(d) GT2708

Model name	Remarks	Reference
GT2708-STBA	8.4-type SVGA [800×600 dots] TFT color liquid crystal display, 65536 colors <Multimedia and video/RGB and multi-touch supported> 100-240VAC, user memory, storage memory (ROM): 57MB, operation memory (RAM): 128MB ・Requiring GT Designer3 Version1 (GOT2000) 1.155M or later.	GT27 General Description (IB(NA)-0800502)
GT2708-STBD	8.4-type SVGA [800×600 dots] TFT color liquid crystal display, 65536 colors <Multimedia and video/RGB and multi-touch supported> 24VDC, user memory, storage memory (ROM): 57MB, operation memory (RAM): 128MB ・Requiring GT Designer3 Version1 (GOT2000) 1.155M or later.	
GT2708-VTBA	8.4-type VGA ［640×480 dots] TFT color liquid crystal display, 65536 colors <Multimedia and video/RGB and multi-touch supported> 100-240VAC, user memory, storage memory (ROM): 57MB, operation memory (RAM): 128MB ・Requiring GT Designer3 Version1 (GOT2000) 1.165X or later.	GT27 General Description (IB(NA)-0800502)
GT2708-VTBD	8.4-type VGA ［640×480 dots] TFT color liquid crystal display, 65536 colors <Multimedia and video/RGB and multi-touch supported> 24VDC, user memory, storage memory (ROM): 57MB, operation memory (RAM): 128MB ・Requiring GT Designer3 Version1 (GOT2000) 1.165X or later.	

(e) GT2705

Model name	Remarks	Reference
GT2705-VTBD	5.7-type VGA ［640×480 dots] TFT color liquid crystal display, 65536 colors <Multi-touch supported> 24VDC, user memory, storage memory (ROM): 32MB, operation memory (RAM): 80MB ・Requiring GT Designer3 Version1 (GOT2000) 1.165X or later.	GT27 General Description (IB(NA)-0800502)

(2) SD card

Model name	Remarks	Reference
NZ1MEM-2GBSD	2GB SD memory card for GOT	MELSEC iQ-R Module Configuration Manual (SH(NA)-081262)

(3) Protection sheet

Model name	Remarks	Reference
GT27-15PSCC	Protection sheet for 15-type (Clear, 5 sheets) Surface treatment: clear, sheet color: clear, USB environment resistant cover part: with opening, the number of sheets in a set: 5 sheets	GOT2000 Series Protective Sheet for GT27/GT25/GT23 User's Manual (IB(NA)-0800499)
GT25-12PSCC	Protection sheet for 12.1-type (Clear, 5 sheets) Surface treatment: clear, sheet color: clear, USB environment resistant cover part: with opening, the number of sheets in a set: 5 sheets	
GT25-10PSCC	Protection sheet for 10.4-type (Clear, 5 sheets) Surface treatment: clear, sheet color: clear, USB environment resistant cover part: with opening, the number of sheets in a set: 5 sheets	
GT25-08PSCC	Protection sheet for 8.4-type (Clear, 5 sheets) Surface treatment: clear, sheet color: clear, USB environment resistant cover part: with opening, the number of sheets in a set: 5 sheets	
GT25-05PSCC	Protection sheet for 5.7-type (Clear, 5 sheets) Surface treatment: clear, sheet color: clear, USB environment resistant cover part: with opening, the number of sheets in a set: 5 sheets	

3.2.2 GT25

(1) GOT

(a) GT2512

Model name	Remarks	Reference
GT2512-STBA	12.1-type SVGA [800×600 dots] TFT color liquid crystal display, 65536 colors 100-240VAC, user memory, storage memory (ROM):32MB, operation memory (RAM): 80MB ・Requiring GT Designer3 Version1 (GOT2000) 1.155X or later.	GT25 General Description (IB(NA)-0800537)
GT2512-STBD	12.1-type SVGA [800×600 dots] TFT color liquid crystal display, 65536 colors 24VDC, user memory, storage memory (ROM): 32MB, operation memory (RAM): 80MB ・Requiring GT Designer3 Version1 (GOT2000) 1.155X or later.	

(b) GT2510

Model name	Remarks	Reference
GT2510-VTBA	10.4-type VGA ［640×480 dots] TFT color liquid crystal display, 65536 colors 100-240VAC, user memory, storage memory (ROM):32MB, operation memory (RAM): 80MB ・Requiring GT Designer3 Version1 (GOT2000) 1.165X or later.	GT25 General Description (IB(NA)-0800537)
GT2510-VTBD	10.4-type VGA ［640×480 dots] TFT color liquid crystal display, 65536 colors 24VDC, user memory, storage memory (ROM): 32MB, operation memory (RAM): 80MB ・Requiring GT Designer3 Version1 (GOT2000) 1.165X or later.	

(c) GT2508

Model name	Remarks	Reference
GT2508-VTBA	8.4-type VGA ［640×480 dots] TFT color liquid crystal display, 65536 colors 100-240VAC, user memory, storage memory (ROM): 32MB, operation memory (RAM): 80MB ・Requiring GT Designer3 Version1 (GOT2000) 1.165X or later.	GT25 General Description (IB(NA)-0800537)
GT2508-VTBD	8.4-type VGA ［640×480 dots] TFT color liquid crystal display, 65536 colors 24VDC, user memory, storage memory (ROM): 32MB, operation memory (RAM): 80MB ・Requiring GT Designer3 Version1 (GOT2000) 1.165X or later.	

(d) GT25 Handy GOT

Model name	Remarks	Reference
GT2506HS-VTBD	Display section: 6.5" VGA, TFT color liquid crystal display, 65536 colors, panel color: black, power supply: 24 V DC ・Requiring GT Works3 Version1.195D or later	GT25 Handy GOT General Description (GT2506HS-V) (JY997D72901)

(2) SD card

Model name	Remarks	Reference
NZ1MEM-2GBSD	2GB SD memory card for GOT	MELSEC iQ-R Module Configuration Manual (SH(NA)-081262)

(3) Protection sheet

Model name	Remarks	Reference
GT25-12PSCC	Protection sheet for 12.1-type (Clear, 5 sheets) Surface treatment: clear, sheet color: clear, USB environment resistant cover part: with opening, the number of sheets in a set: 5 sheets	GOT2000 Series Protective Sheet for GT27/GT25/GT23 User's Manual (IB(NA)-0800499)
GT25-10PSCC	Protection sheet for 10.4-type (Clear, 5 sheets) Surface treatment: clear, sheet color: clear, USB environment resistant cover part: with opening, the number of sheets in a set: 5 sheets	
GT25-08PSCC	Protection sheet for 8.4-type (Clear, 5 sheets) Surface treatment: clear, sheet color: clear, USB environment resistant cover part: with opening, the number of sheets in a set: 5 sheets	

3.3 Peripheral Device

(1) Signal splitter

Model name	Remarks
FCU7-HN387	Manual pulse generator is required for 2 or 3 axes specifications

(2) FL-net (OPCN-2) Interface module

Model name	Remarks
ER-1FL2-T	10BASE-T, 100BASE-TX

(3) Manual pulse generator

Model name	Remarks
UFO-01-2Z9	5V specifications
HD60C	12V specifications, for connection to operation panel I/O module 12V power supply is separately required.

3.4 Dual Signal Module

(1) Dual signal module

Model name	Remarks
R173SXY	I/O duplication monitoring module (Maximum 3 modules)

(2) Terminal block

Model name	Remarks
FA-TBS40P	Terminal block converter module (Arrangement : MITSUBISHI ELECTRIC ENGINEERING COMPANY LIMITED) UL supported.
FA-LTB40P	Terminal block converter module (Arrangement : MITSUBISHI ELECTRIC ENGINEERING COMPANY LIMITED)

(3) Cable

Model name	Remarks
FA-CBL □□ FMV-M	Cable for terminal block converter module (Cable length □□ = 05:0.5m, 10:1m, 20:2m, 30:3m, 50:5m) (Arrangement: MITSUBISHI ELECTRIC ENGINEERING COMPANY LIMITED)

3.5 List of Q Series Units (for RQ extension base unit)

(1) Extension base

Model name	Remarks	Reference
Q63B	3 slots; for mounting Q series modules including power supply module	QCPU User's Manual (Hardware Design, Maintenance and Inspection) (SH(NA)-080483ENG)
Q65B	5 slots; for mounting Q series modules including power supply module	
Q68B	8 slots; for mounting Q series modules including power supply module	
Q612B	12 slots; for mounting Q series modules including power supply module	
Q52B	2 slots; for mounting Q series modules including power supply module	
Q55B	5 slots; for mounting Q series modules including power supply module	

(2) Extension cable

Model name	Remarks	Reference
QC05B	0.45m Cable	QCPU User's Manual (Hardware Design, Maintenance and Inspection) (SH(NA)-080483ENG)
QC06B	0.6m Cable	
QC12B	1.2m Cable	
QC30B	3m Cable	
QC50B	5m Cable	
QC100B	10m Cable	

(3) Power supply

Model name	Remarks	Reference
Q61P	Input power supply: 100 to 240VAC, output power supply: 5VDC, output current: 6A	QCPU User's Manual (Hardware Design, Maintenance and Inspection) (SH(NA)-080483ENG)
Q63P	Input voltage: 24VDC, output voltage: 5VDC, output current: 6A	
Q64PN	Input voltage: 100 to 240VAC, output voltage: 5VDC, output current: 8.5A	

(4) Output module

(a) Transistor (independent)

Model name	Remarks	Reference
QY68A	8 points, 5 to 24VDC OFF-time leakage current: 0.1mA Response time: 10ms, Sink/source type 18-point terminal block, Surge killer provided All points isolated	I/O Module Type Building Block User's Manual (SH(NA)-080042)

(5) Analog output module

(a) Voltage/current output module

Model name	Remarks	Reference
Q62DA-FG	2 channels Input (resolution): 0 to 12000; -12000 to 12000; -16000 to 16000 Output: -12 to 12VDC, 0 to 22mADC Conversion speed: 10ms/2channels 18-point terminal block, Channels are isolated	Channel Isolated Digital-Analog Converter Module User's Manual (SH(NA)-080281)

(6) MELSECNET/H

(a) SI/QSI optical interface

Model name	Remarks	Reference
QJ71LP21-25	SI/QSI/H-PCF/Broad-band H-PCF optical cable, Double loop PLC to PLC network (control/normal station)/Remote I/O net (remote master station)	Q Corresponding MELSECNET/H Network System Reference Manual (PLC to PLC network) (SH(NA)-080049) Q Corresponding MELSECNET/H Network System Reference Manual (Remote I/O network) (SH(NA)-080124) For QnA/Q4AR MELSECNET/10 Network System Reference Manual (IB(NA)-66690)

(b) Coaxial interface

Model name	Remarks	Reference
QJ71BR11	3C-2V/5C-2V coaxial cable, Single bus PLC to PLC network (control/normal station)/ Remote I/O net (remote master station)	Q Corresponding MELSECNET/H Network System Reference Manual (PLC to PLC network) (SH(NA)-080049) Q Corresponding MELSECNET/H Network System Reference Manual (Remote I/O network) (SH(NA)-080124) For QnA/Q4AR MELSECNET/10 Network System Reference Manual (IB(NA)-66690)

(7) FL-net (OPCN-2)

(a) Ver.2.00

Model name	Remarks	Reference
QJ71FL71-T-F01	10BASE-T/100BASE-TX	FL-net(OPCN-2) Interface Module User’s Manual (SH(NA)-080350E)

(8) AS-i

Model name	Remarks	Reference
QJ71AS92	Master station, AS-Interface Specification Version 2.11 supported	AS-i Master Module User's Manual (Hardware) (IB(NA)-0800122E)

(9) DeviceNet

Model name	Remarks	Reference
QJ71DN91		

4

General Specifications

For the specifications of GOT, I/O unit, etc. refer to the manuals listed in "List of Configuration".
For the drive unit specifications, refer to the specification manual for the drive unit you are using

4.1 Installation Environment Conditions

C80, which is an open equipment, must be installed within a sealed metal control panel (IP54 or higher).
C80 must also be used and stored under the conditions listed in the table of specifications below.

<table>
<tr><th>Item</th><th colspan="6">Specification</th></tr>
<tr><td>Operating ambient temperature</td><td colspan="6">0 to 55 ℃ (-13 to 167°F)</td></tr>
<tr><td>Storage ambient temperature</td><td colspan="6">-25 to 75 ℃ (-13 to 167°F)</td></tr>
<tr><td>Operating ambient humidity</td><td colspan="6">5 to 95%RH non-condensing</td></tr>
<tr><td>Storage ambient humidity</td><td colspan="6">5 to 95%RH non-condensing</td></tr>
<tr><td rowspan="5">Vibration resistance</td><td rowspan="5">Compliant with JIS B 3502 and IEC 61131-2</td><td></td><td>Frequency</td><td>Constant acceleration</td><td>Half amplitude</td><td>Sweep count</td></tr>
<tr><td rowspan="2">Under intermittent vibration</td><td>5 to 8.4Hz</td><td>-</td><td>3.5mm</td><td rowspan="2">10 times each in X, Y, Z directions (For 80 min.)</td></tr>
<tr><td>8.4 to 150Hz</td><td>9.8m/s^2</td><td>-</td></tr>
<tr><td rowspan="2">Under continuous vibration</td><td>5 to 8.4Hz</td><td>-</td><td>1.75mm</td><td rowspan="2">-</td></tr>
<tr><td>8.4 to 150Hz</td><td>4.9m/s^2</td><td>-</td></tr>
<tr><td>Shock resistance</td><td colspan="6">147m/s^2, 3 times in each of 3 directions X, Y, Z</td></tr>
<tr><td>Operating ambience</td><td colspan="6">No corrosive gases nor inflammable gases</td></tr>
<tr><td>Operating altitude</td><td colspan="6">2000m (6561.68ft.) or less (Note 3)</td></tr>
<tr><td>Installation location</td><td colspan="6">Inside control panel</td></tr>
<tr><td>Overvoltage category (Note 1)</td><td colspan="6">II or less</td></tr>
<tr><td>Pollution level (Note 2)</td><td colspan="6">2 or less</td></tr>
</table>

(Note 1) This indicates the section of the power supply to which the equipment is assumed to be connected between the public electrical power distribution network and the machinery within premises.
Category II applies to equipment for which electrical power is supplied from fixed facilities.
The surge withstand voltage for the equipment up to the rated 300V is 2500V.

(Note 2) This index indicates the degree to which conductive material is generated in terms of the environment in which the equipment is used.
Pollution level 2 is when only non-conductive pollution occurs. A temporary conductivity caused by condensing must be expected occasionally.

(Note 3) Do not use or store C80 under pressure higher than the atmospheric pressure of altitude 0m. Doing so can cause an operation failure.

(Note 4) The following environment conditions are also required for the layout design.

- No large amount of conductible dust, iron filings, oil mist, salt, or organic solvents
- No direct sunlight
- No strong electrical or magnetic fields
- No direct vibrations nor shocks on C80

4.2 Base Unit

4.2.1 Basic Base Unit

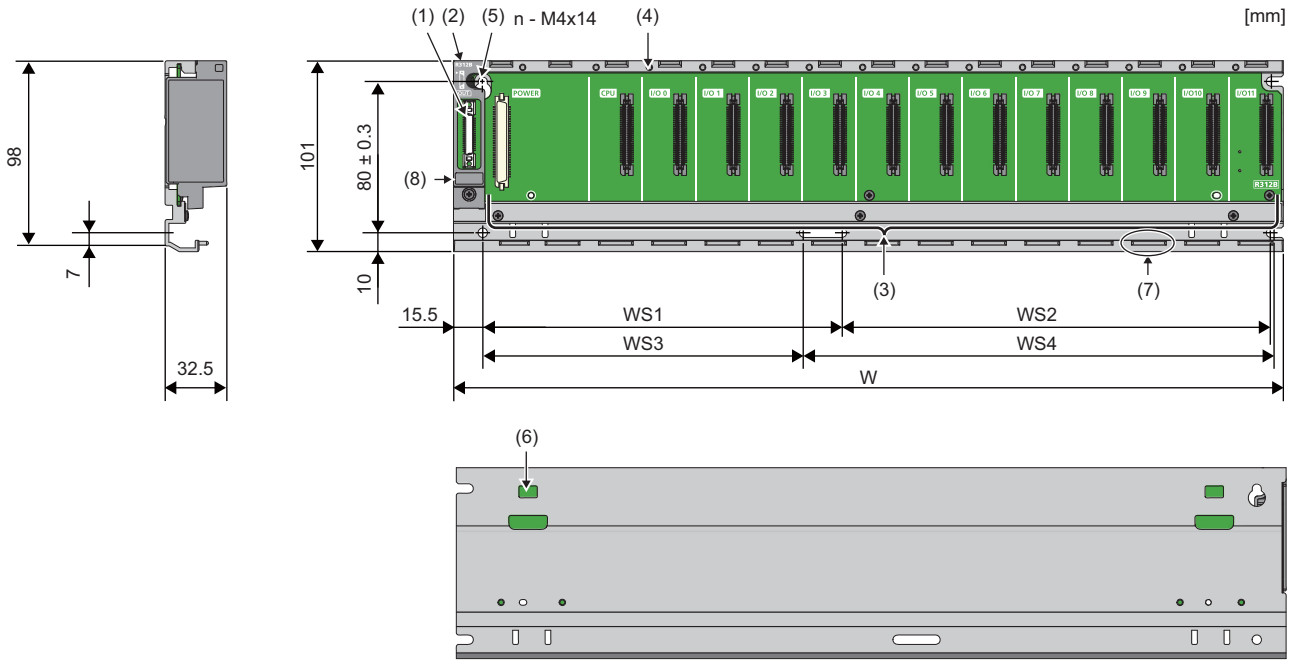

	R35B	R38B	R312B
n	4	5	5
W	245	328	439
WS1	-	190±0.3	190±0.3
WS2	-	116±0.3	227±0.3
WS3	-	(170)	(170)
WS4	-	(138)	(249)
WS1+WS2	222.5±0.3	-	-
WS3+WS4	(224.5)	-	-

[mm]

Number	Name	Description
(1)	Extension cable connector (OUT)	A connector for connecting to an extension base unit. A MELSEC iQ-R series extension cable is connected here. When no cable is connected, attach the supplied extension connector cover to prevent entry of foreign matter such as dust.
(2)	Extension connector cover	A protective cover for the extension cable connector.
(3)	Module connector	A connector for mounting MELSEC iQ-R series modules. Attach the supplied connector cover or the blank cover module (RG60) to the connector(s) where no module is mounted to prevent entry of foreign matter such as dust.
(4)	Module fixing hole	A screw hole to fix a module to the base unit (M3×12 screw)
(5)	Base unit installation hole	A hole to install a base unit to a control panel. (M4 screw)
(6)	DIN rail adapter mounting hole	A hole to mount a DIN rail adapter.
(7)	Guide	A guide to mount a module to the base unit.
(8)	Production information marking	Shows the production information (16 digits) of the module.

4.2.2 Extension Base Unit

(1) R65B/R68B/RQ612B

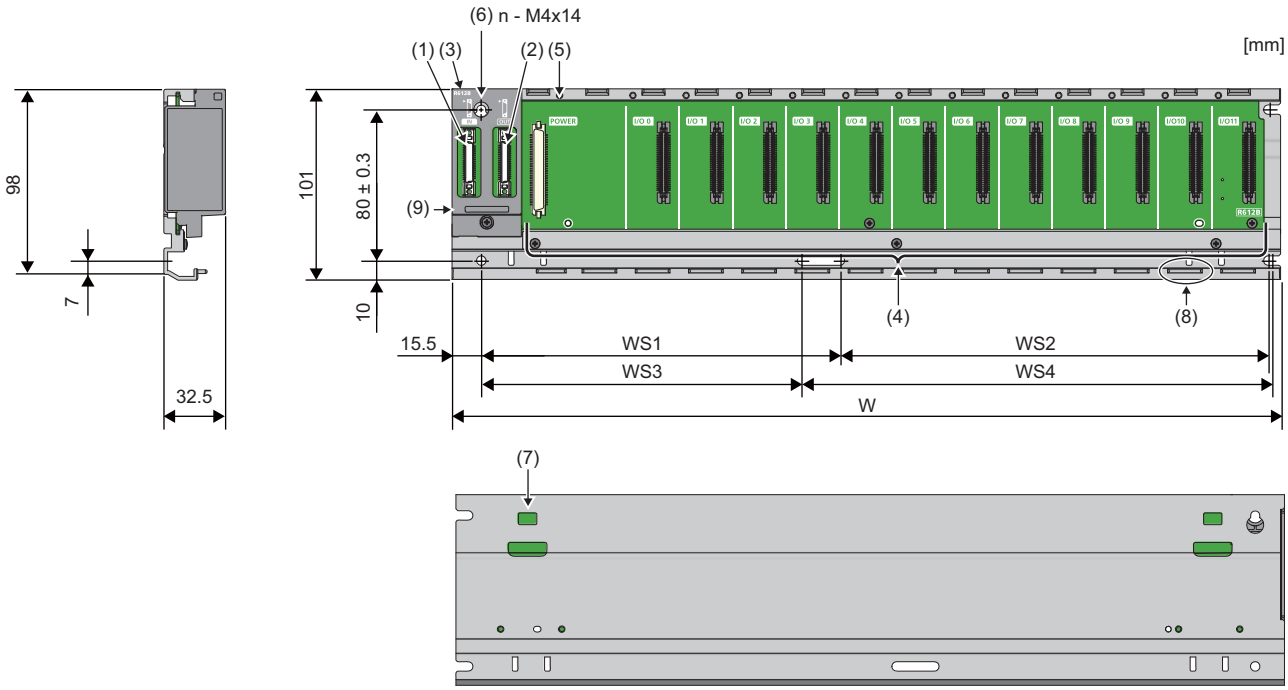

	R65B	R68B	R612B
n	4	5	5
W	245	328	439
WS1	-	190±0.3	190±0.3
WS2	-	116±0.3	227±0.3
WS3	-	(170)	(170)
WS4	-	(138)	(249)
WS1+WS2	222.5±0.3	-	-
WS3+WS4	(224.5)	-	-

[mm]

No.	Name	Description
(1)	Extension cable connector (IN)	A connector for connecting to a base unit (upper level). A MELSEC iQ-R series extension cable is connected here.
(2)	Extension cable connector (OUT)	A connector for connecting to a base unit (lower level). A MELSEC iQ-R series extension cable is connected here. When no cable is connected, attach the supplied extension connector cover to prevent entry of foreign matter such as dust.
(3)	Extension connector cover	A protective cover for the extension cable connector.
(4)	Module connector	A connector for mounting MELSEC iQ-R series modules. The CPU module and remote head module cannot be mounted on an extension base unit. Attach the supplied connector cover or the blank cover module (RG60) to the connector(s) where no module is mounted to prevent entry of foreign matter such as dust.
(5)	Module fixing hole	A screw hole to fix a module to the base unit. (M3×12 screw)
(6)	Base unit installation hole	A hole to install a base unit to a control panel. (M4 screw)
(7)	DIN rail adapter mounting hole	A hole to mount a DIN rail adapter.
(8)	Guide	A guide to mount a module to the base unit.
(9)	Production information marking	Shows the production information (16 digits) of the module.

(2) Q63B/Q65B/Q68B/Q612B/Q52B/Q55B

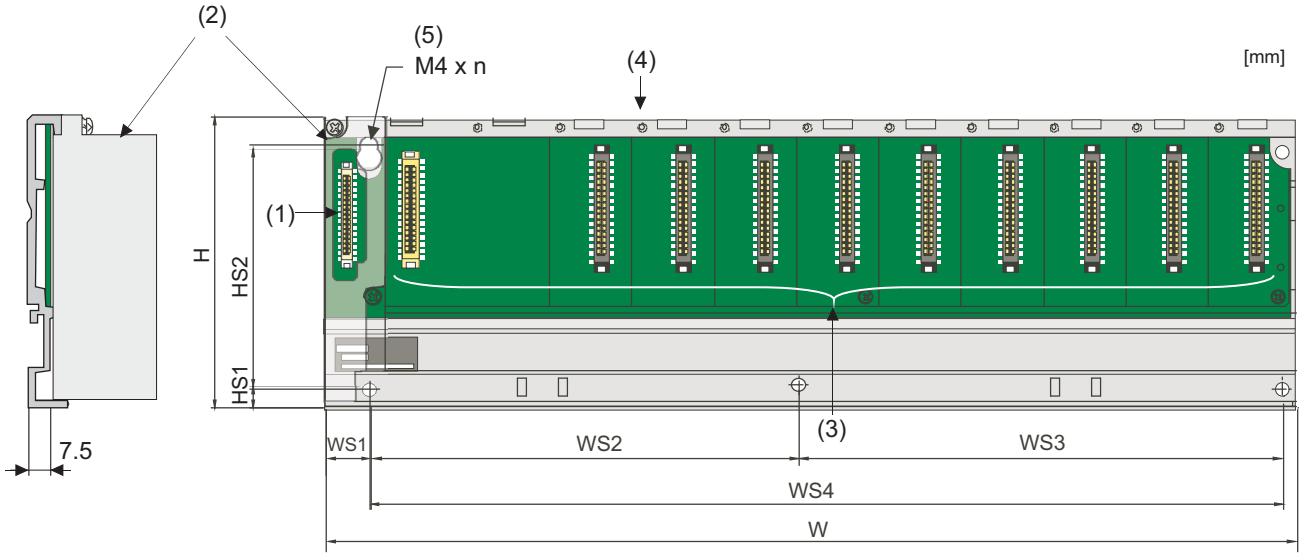

	Q63B	Q65B	Q68B	Q612B	Q52B	Q55B
n	4	4	5	5	4	4
W	189	245	328	439	106	189
WS1	15.5					
WS2	-	-	190±0.3	190±0.3	-	-
WS3	-	-	116±0.3	227±0.3	-	-
WS4	167±0.3	222.5±0.3	-	-	83.5±0.3	167±0.3
H	98					
HS1	7					
HS2	80±0.3					

[mm]

No.	Name	Application
(1)	Extension cable connector	Connector to which the extension cables are connected for sending and receiving signals from the extension base unit.
(2)	Base cover	Protective cover of extension cable connector. Before an extension cable is connected, the area of the base cover surrounded by the groove under the word "OUT" on the base cover must be removed with a tool such as nippers.
(3)	Module connector	Connector for installing the Q series power supply module, CPU module, I/O modules, and intelligent function module. Attach the supplied connector cover or the blank cover module (QG60) to the connector(s) where no module is mounted to prevent entry of foreign matter such as dust.
(4)	Module fixing screw hole	Screw hole for fixing the module to the base unit. Screw size: M3x12
(5)	Base fixing hole	Hole for fixing this base unit onto the panel of the control panel. (for M4 screw)

4.2.3 RQ Extension Base Unit

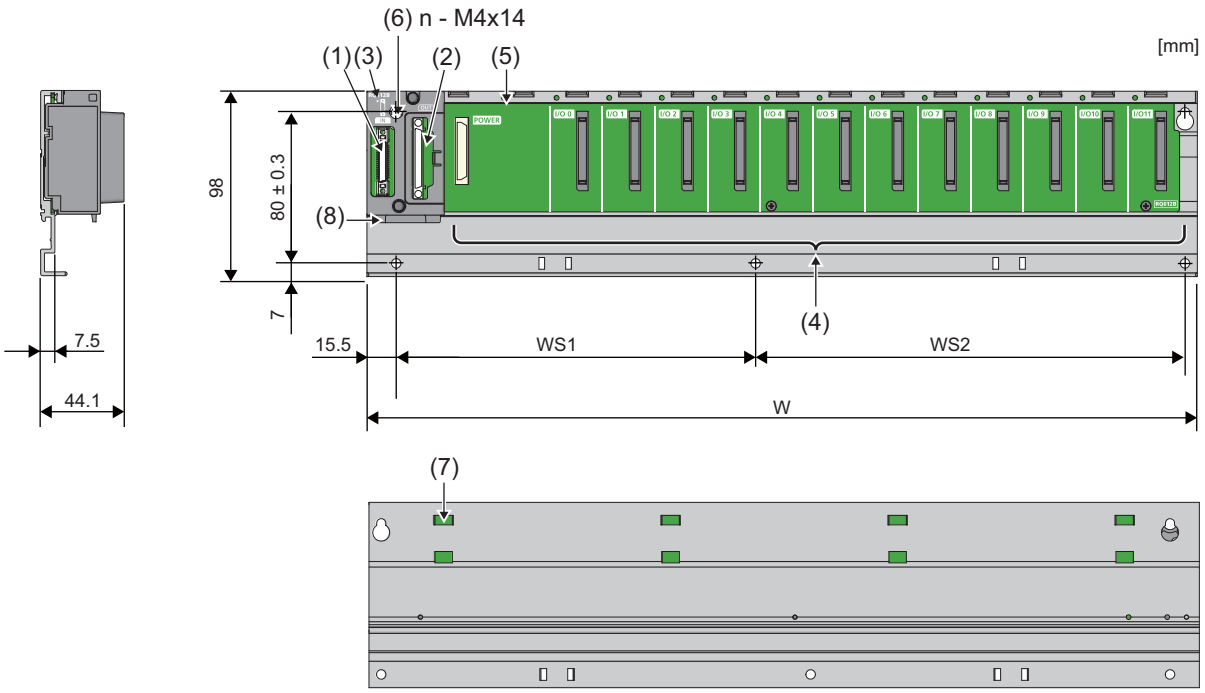

	RQ65B	RQ68B	RQ612B
n	4	5	5
W	245	328	439
WS1	-	190±0.3	190±0.3
WS2	-	116±0.3	227±0.3
WS1+WS2	222.5±0.3	-	-

[mm]

No.	Name	Description
(1)	Extension cable connector (IN)	A connector for connecting to a MELSEC iQ-R series base unit (upper level). A MELSEC iQ-R series extension cable is connected here.
(2)	Extension cable connector (OUT)	A connector for connecting to a MELSEC-Q series base unit (lower level). A MELSEC-Q series extension cable is connected here. When no cable is connected, attach the supplied extension connector cover to prevent entry of foreign matter such as dust.
(3)	Extension connector cover	A protective cover for the extension cable connector.
(4)	Module connector	A connector for mounting the MELSEC-Q series unit. The CPU module cannot be mounted on the extension base unit. Attach the supplied connector cover or the blank cover module (QG60) to the connector(s) where no module is mounted to prevent entry of foreign matter such as dust.
(5)	Module fixing hole	A screw hole to fix a module to the base unit. (M3×12 screw)
(6)	Base unit installation hole	A hole to install a base unit to a control panel. (M4 screw)
(7)	DIN rail adapter mounting hole	A hole to mount a DIN rail adapter.
(8)	Production information marking	Shows the production information (16 digits) of the module.

4.3 Power Supply

4.3.1 R61P/R62P/R63P/R64P

Specifications

Item		AC input power supply module			DC input power supply module
		R61P	R62P	R64P	R63P
Input power supply voltage (*1)		100 to 240VAC (85 to 264VAC)			24VDC (15.6 to 31.2VDC)
Input frequency		50/60Hz±5%			-
Input voltage distortion factor		Within 5%			-
Maximum input apparent power		130VA	120VA	160VA	-
Maximum input power		-			50W
Inrush current (*2)		20A, 8ms or less			100A, 1ms or less
Rated output current	5VDC	6.5A	3.5A	9A	6.5A
	24VDC	-	0.6A	-	-
Overcurrent protection (*3)	5VDC	7.1A or higher	3.8A or higher	10.0A or higher	7.1A or higher
	24VDC	-	0.66A or higher	-	-
Overvoltage protection (*4)	5VDC	5.5 to 6.5V			
Efficiency		76% or more			70% or more
Allowable momentary power failure time (*5)		Within 20ms			Within 10ms
Withstand voltage		2300VACrms per minute (altitude 0 to 2000m), Between the combined "line input/LG terminals" and the "FG terminal and output"			510VAC per minute (altitude 0 to 2000m), between primary terminal and 5VDC terminal
Insulation resistance		10MΩ or higher by 500VDC insulation resistance tester (between the combined "line input/LG terminals" and the "FG terminal and output", the line input and LG terminals, the output and FG terminals)			
Noise withstand level		• Noise voltage 1500Vp-p, noise width 1μs, noise frequency 25 to 60Hz (noise simulator condition) • Noise immunity test IEC 61000-4-4: 2kV			
Fuse		Built-in (user-unchangeable)			
Contact output section	Application	ERR contact			
	Rated switching voltage/current	24VDC, 0.5A			
	Minimum switching load	5VDC, 1mA			
	Response time	Off → on: 10ms or less On → off: 12ms or less			
	Life time	Mechanical: 20 million times or more Electrical: Rated switching voltage/current, 100 thousand times or more			
	Surge suppressor	None			
	Fuse	None			
Terminal screw size		M4 (M3.5 for +24V and 24G terminals of the R62P)			
Applicable wire size		0.75 to 2mm2			
Applicable solderless terminal		RAV1.25-4, RAV2-4, thickness of 0.8mm or less, up to two solderless terminal connections per terminal (for the +24V and 24G terminals of the R62P: RAV1.25-3.5, RAV2-3.5, thickness of 0.8mm or less, up to two solderless terminal connections per terminal)			
Applicable tightening torque		M4 screw: 1.02 to 1.38N·m M3.5 screw: 0.66 to 0.89N·m			
External dimensions	Height	106mm (Base unit mounting side: 98mm)			
	Width	54.6mm			
	Depth	110mm			
Mass		0.41kg	0.45kg	0.46kg	0.41kg

(*1) Input power supply voltage

Input power supply voltage is a voltage required for the power supply module to operate normally. If the voltage is out of the specified range, an error is detected and the system may stop.

(*2) Inrush current

Inrush current is the maximum, instantaneous input current drawn into the circuits immediately after power-on. If power is supplied to the system immediately after shut-off, an inrush current of more than the specified value may flow.

Wait for five seconds or more after shut-off, and supply power to the system again.

When selecting a fuse or a breaker for the external circuit, consider blowouts, sensing property, and specified value of inrush current.

(*3) Overcurrent protection

The function of this protection is to shut off the circuit to stop the system if a current exceeding the specification value flows into a circuit of 5VDC or 24VDC.

With overcurrent protection activated, the LED of the power supply module goes off or lights dim green due to a voltage drop.

To restart the system, shut off the power and eliminate the cause of the problem, such as insufficient current or short-circuit. After the cause is eliminated, wait for a few minutes, and supply power to the system again. When the output current is back to normal, the system starts initially.

(*4) Overvoltage protection

The function of this protection is to shut off the circuit to stop the system if an overvoltage exceeding the specified value is applied to a 5VDC circuit.

With overvoltage protection activated, the POWER LED of the power supply module turns off.

To restart the system, shut off the power, wait for a few minutes, and supply power to the system again. Then, the system starts initially.

If the system does not restart and the POWER LED remains off, replace the power supply module.

(*5) Allowable momentary power failure time

The system detects an input voltage down and stops its operation when a momentary power failure occurs. Allowable momentary power failure time is a period of time that the system can continue its operation even after the power failure.

If power fails exceeding this period of time, the system can either continue its operation or start initially, depending on the load of the power supply module. When the system continues its operation, the operation will be the same as that of the system returned within the allowable momentary power failure time.

Outline dimension

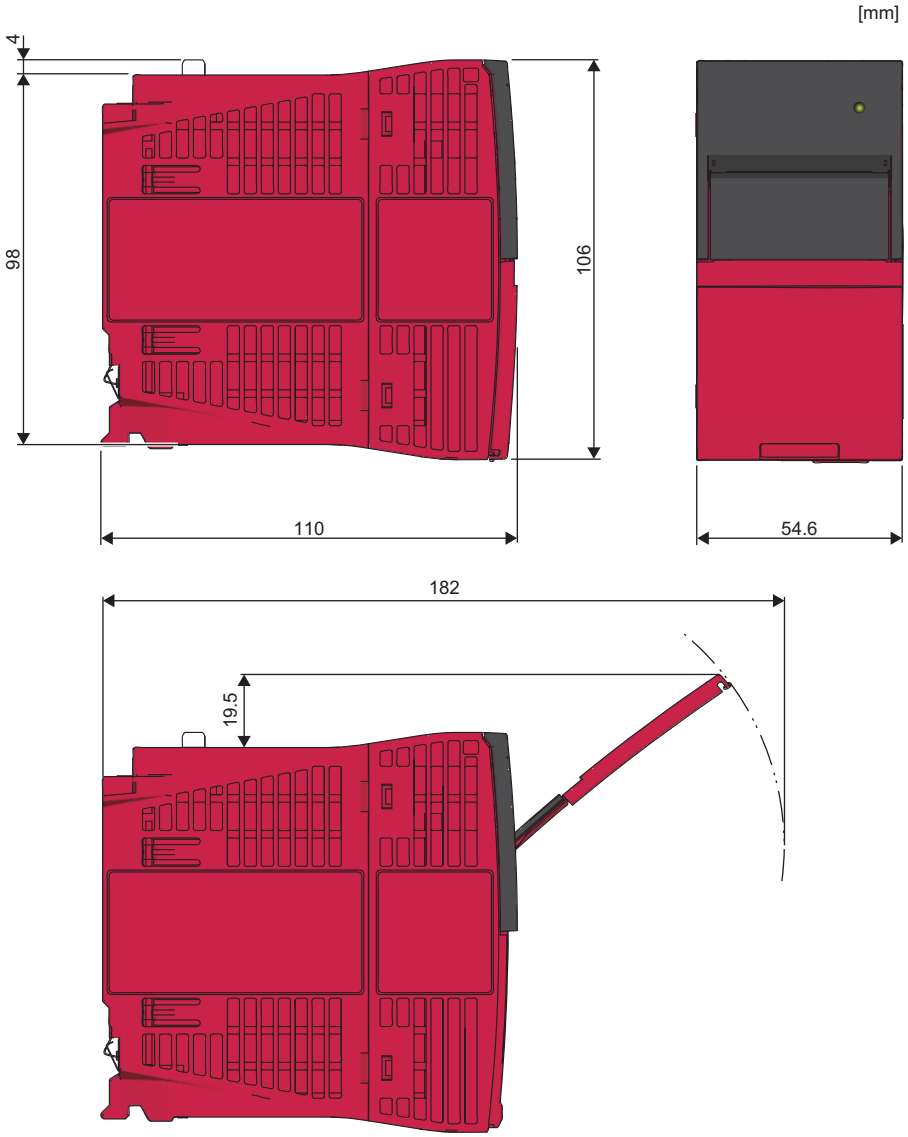

Names of parts

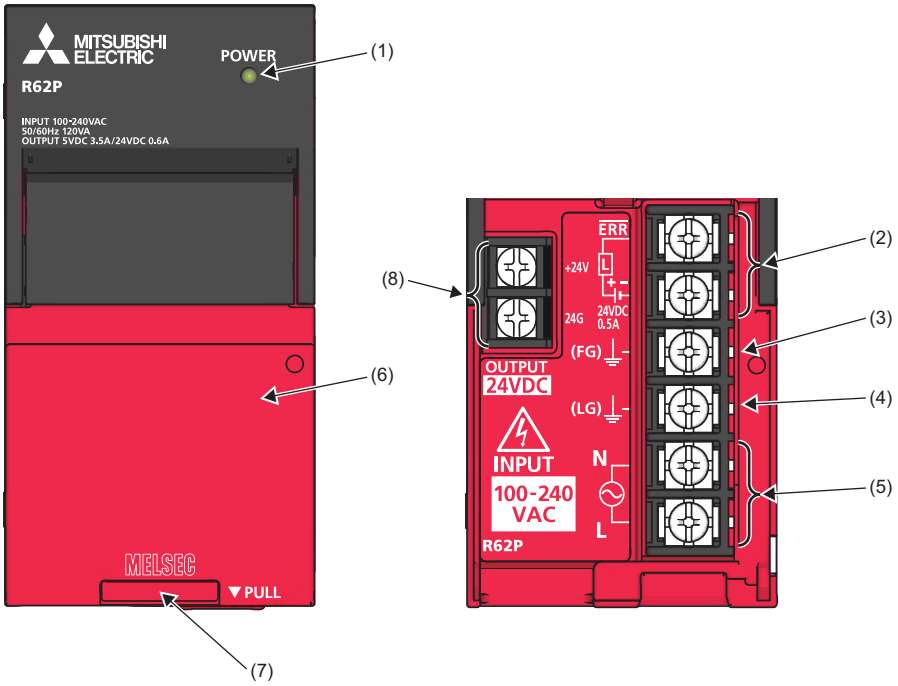

No.	Name	Description
(1)	POWER LED	Indicates the operating status of the power supply module. On: Normal operation Off: Power-off, power failure, or hardware failure
(2)	$\overline{\text{ERR}}$ contact	[When mounting the module on the main base unit] The contact turns on when the entire system operates normally. (M4 screw) This contact turns off (opens) in the following cases: • When the power supply module fails • When the power is not supplied • When a stop error (including reset) occurs in the CPU module • When the fuse is blown In a multiple CPU system, the contact turns off when a stop error occurs in any of the CPU modules. When the remote head module is mounted, this contact turns off when moderate or major error (including reset) occurs. [When mounting the module on the extension base unit] The contact is off at all times. When the module is mounted on a redundant power supply extension base unit, the following operation is performed: • The contact turns on when the power supply module operates normally. (M4 screw) • This contact turns off (opens) when the power supply module fails, the power is not supplied, or the fuse is blown.
(3)	FG terminal (*1)	A ground terminal connected to the shield pattern of the printed circuit board. This terminal is a functional ground terminal. (M4 screw)
(4)	LG terminal (*1)	A ground terminal for the power supply input filter. This terminal is a functional ground terminal. For AC input, the terminal has one-half the potential of the input voltage. (M4 screw)
(5)	Power input terminal	A power input terminal for the power supply module. The power supply to be connected differs depending on a power supply module. (M4 screw) (Refer to the specifications list.)
(6)	Terminal cover	A protective cover for the terminal block.
(7)	Production information marking	Shows the production information (16 digits) of the module.
(8)(*2)	+24V terminal and 24G terminal	Used for a device that requires a supply of 24VDC. (M3.5 screw) The power is supplied to a device through the external wiring.

(*1) Individually ground the FG and LG terminals with a ground resistance of 100 ohms or less.
(*2) Only the R62P has these terminals.

4.3.2 Q61P/Q63P/Q64PN

Specifications

Item		Q61P
Base loading position		Q series power supply module loading slot
Applicable base unit		Q63B, Q65B, Q68B, Q612B
Input power supply		100 to 240VAC+10%-15% (85 to 264VAC)
Input frequency		50/60Hz±5%
Input voltage distortion factor		Within 5%
Maximum input apparent power		130VA
Inrush current		Within 20A 8ms (*4)
Rated output current	5VDC	6A
	24VDC	-
Overcurrent protection (*1)	5VDC	6.6A or higher
	24VDC	-
Overvoltage protection (*2)	5VDC	5.5 to 6.5V
Efficiency		70% or more
Permissible instantaneous power off time (*3)		Within 20ms
Withstand voltage		Across inputs/LG and outputs/FG 2830VAC rms/3 cycles (Altitude: 2000m)
Insulation resistance		Across inputs and outputs (LG and FG separated), across inputs for LG/FG, across outputs for LG/FG 10MΩ or more by insulation resistance tester (500VDC)
Noise withstand level		By noise simulator of 1500Vp-p noise voltage, 1μs noise width and 25 to 60Hz noise frequency Noise voltage IEC61000-4-4, 2kV
Operation display		LED display (Normal: ON (Green), Error: OFF)
Fuse		Built-in (Unchangeable by user)
Contact output section	Application	ERR contact
	Rated switching voltage/current	24VDC, 0.5A
	Minimum switching load	5VDC, 1mA
	Response time	OFF to ON:10ms or less, ON to OFF:12ms or less
	Life time	Mechanical: 20 million times or more Electrical: 100 thousand times or more at rated switching voltage/current
	Surge suppressor	None
	Fuse	None
Terminal screw size		M3.5 screw
Applicable size of wire		0.75 to 2mm ^{2}
Applicable solderless terminal		RAV1.25-3.5, RAV2-3.5
Applicable tightening torque		0.66 to 0.89N·m
Mass [kg]		0.4

Item		Q63P	Q64PN
Base loading position		Q series power supply module loading slot	
Applicable base unit		Q63B, Q65B, Q68B, Q612B	
Input power supply		24VDC+30%-35% (15.6 to 31.2VDC)	100 to 240VAC+10%-15% (85 to 264VAC)
Input frequency		-	50/60Hz±5%
Input voltage distortion factor		-	Within 5%
Maximum input apparent power		45W	160VA
Input current		at 24VDC input: 1.82A or less at 15.6VDC input: 2.8A or less	at 100VAC input: 1.3A or less at 200VAC input: 0.75A or less
Repetitive peak current		-	4A or less
Inrush current		100A 1ms or less (at 24VDC input)	Within 20A 8ms (*4)
Rated output current	5VDC	6A	8.5A
	24VDC	-	-
Overcurrent protection (*1)	5VDC	6.6A or higher	9.9A or higher
	24VDC	-	-
Overvoltage protection (*2)	5VDC	5.5 to 6.5V	
Efficiency		70% or more	
Permissible instantaneous power off time (*3)		Within 10ms (at 24VDC input)	Within 20ms
Withstand voltage		500VAC across primary and 5VDC	Across inputs/LG and outputs/FG 2,830VAC rms/3 cycles (Altitude: 2,000m (6,561.68ft.))
Insulation resistance		10MΩ or more (measured with an insulation resistance tester)	Input and LG batched, output and FG batched, batch input-LG, batch output-FG 10MΩ or m ore by insulation resistance tester (500VDC)
Noise withstand level		By noise simulator of 500Vp-p noise voltage, 1μs noise width and 25 to 60Hz noise frequency	By noise simulator of 1,500Vp-p noise voltage, 1μs noise width and 25 to 60Hz noise frequency Noise voltage IEC61000-4-4, 2kV
Operation display		LED display (Normal: ON (Green), Error: OFF)	LED display (Normal: ON (Green), Error: OFF)
Fuse		Built-in (Unchangeable by user)	
Contact output section	Application	ERR contact	
	Rated switching voltage/current	24VDC, 0.5A	
	Minimum switching load	5VDC, 1mA	
	Response time	OFF to ON: 10ms or less, ON to OFF: 12ms or less	
	Life time	Mechanical: 20 million times or more Electrical: 100 thousand times or more at rated switching voltage/current	
	Surge suppressor	None	
	Fuse	None	
Terminal screw size		M3.5 screw	
Applicable size of wire		0.75 to 2mm ^{2}	
Applicable solderless terminal		RAV1.25-3.5, RAV2-3.5	
Applicable tightening torque		0.66 to 0.89N·m	
Mass [kg]		0.33	0.47

(*1) Overcurrent protection

The overcurrent protection device shuts off the 5V, 24VDC circuit and stops the system if the current flowing in the circuit exceeds the specified value.

The LED of the power supply module is turned off or lights up in dim green when voltage is lowered.

If this device is activated, switch the input power supply off and eliminate the cause such as insufficient current capacity or short. Then, a few minutes later, switch it on to restart the system.

The initial start for the system takes place when the current value becomes normal.

(*2) Overvoltage protection

The overvoltage protection device shuts off the 5VDC circuit and stops the system if a voltage of 5.5VDC or more is applied to the circuit.

When this device is activated, the power supply module LED is switched OFF.

To restart the system, switch the input power OFF, then a few minutes later ON.

The initial start for the system will take place.

The power supply module must be changed if the system is not booted and the LED remains OFF.

(*3) Permissible instantaneous power off time

(1) For AC input power supply

An instantaneous power failure lasting less than 20ms will cause AC down to be detected, but operation will continue.

An instantaneous power failure lasting in excess of 20ms may cause the operation to continue or initial start to take place depending on the power supply load.

Further, when the AC supply of the AC input module is the same as that of the power supply module, it prevents the sensor connected to the AC input module, which is ON at power-off, from turning OFF by switching off the power supply.

However, if only the AC input module is connected to the AC line, which is connected to the power supply, detection of the AC down for the power supply module may be delayed by the capacitor in the AC input module. Thus, connect a load of approx. 30mA per AC input module to the AC line.

(2) For DC input power supply

An instantaneous power failure lasting less than 10ms* will cause 24VDC down to be detected, but operation will continue.

An instantaneous power failure lasting in excess of 10ms* may cause the operation to continue or initial start to take place depending on the power supply load. * : This is for a 24VDC input. This is 10ms or less for less than 24VDC.

(*4) Inrush current

When power is switched on again immediately (within 5 seconds) after power-off, an inrush current of more than the specified value (2ms or less) may flow. Reapply power 5 seconds after power-off.

When selecting a fuse and breaker in the external circuit, take account of the blow out, detection characteristics and above matters.

(*5) Operation indication

During the operation, do not allow the input voltage to change from 200VAC level (170 to 264VAC) to 100VAC level (85 to 132VAC).

(If changed, the POWER LED of the module turns off and the system operation stops.)

Outline dimension

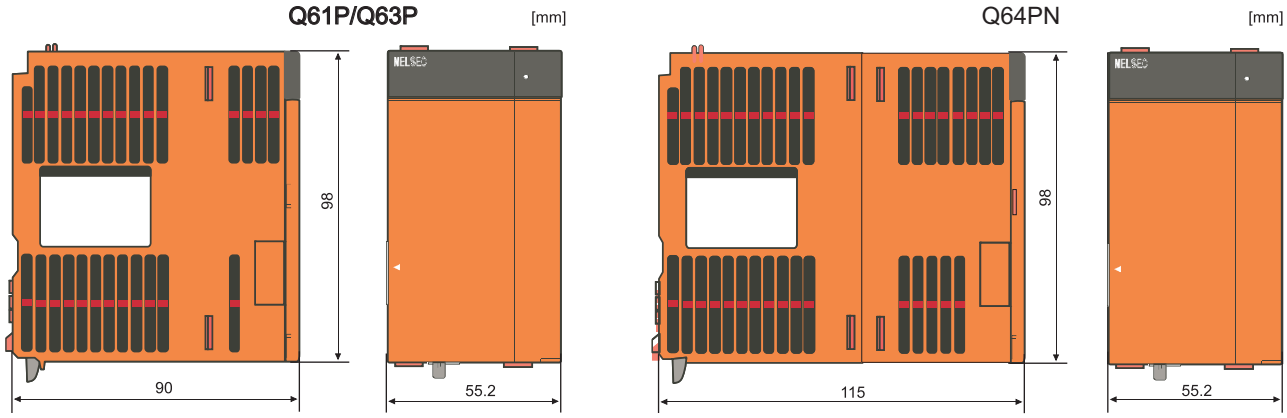

Names of parts

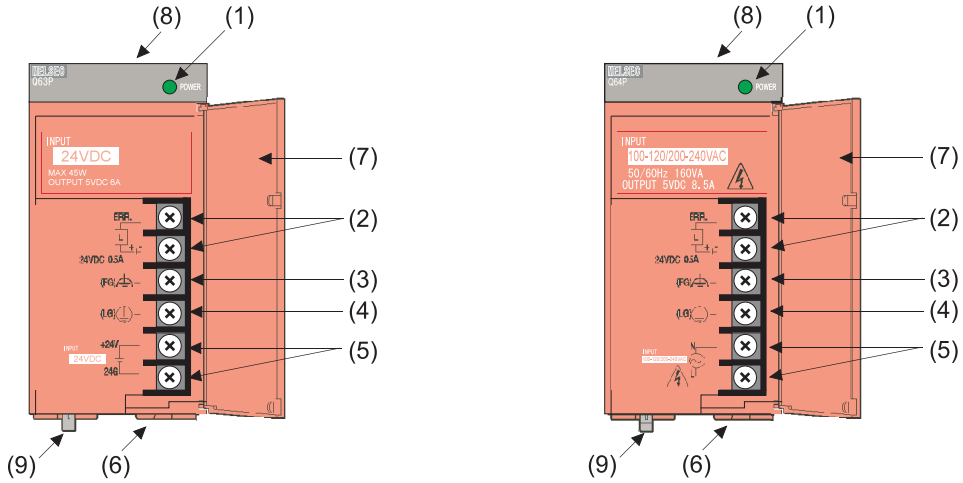

(1) POWER LED

Q61P/Q64PN

ON (green):

Normal (5VDC output, instantaneous power failure within 20ms)

OFF:

- The power supply module is out of order while AC power supply is ON. (5VDC error, internal circuit failure, blown fuse)
- Over current protection or over voltage protection operated.
- AC power supply is not ON (including power failure and an instantaneous power failure of more than 20ms)

Q63P

ON (green):

Normal (5VDC output, instantaneous power failure within 10ms)

OFF:

- The power supply module is out of order while DC power supply is ON. (5VDC error, internal circuit failure, blown fuse)
- Over current protection or over voltage protection operated.
- DC power supply is not ON (including power failure and an instantaneous power failure of more than 10ms)

(2) ERR terminal

Q61P/Q64PN

- Turned ON when the whole system operates normally.
- This terminal turns OFF (opens) when the AC power is not input, a stop error (including a reset) occurs in the CPU module, or the fuse is blown.
- In a Multiple CPU system configuration, turned OFF when a stop error occurs in any of the CPU modules.
- Normally OFF when loaded in an extension base unit.

Q63P

- Turned ON when the whole system operates normally.
- This terminal turns OFF (opens) when the DC power is not input, a stop error (including a reset) occurs in the CPU module, or the fuse is blown.
- In a Multiple CPU system configuration, turned OFF when a stop error occurs in any of the CPU modules.
- Normally OFF when loaded in an extension base unit.

(3) FG terminal

Ground terminal connected to the shield pattern of the printed circuit board.

(4) LG terminal

- Grounding for the power supply filter.
- This terminal has potential of 1/2 of the input voltage for AC input (Q61P, Q64PN and Q64P).
- This is also a protective earth terminal (PE).

(5) Power input terminals

- Power input terminals connected to a power supply of 100VAC or 200VAC. (Q64PN)
- Power input terminals connected to a power supply of 24VDC. (Q63P)
- Power input terminals connected to a power supply of 100-200VAC. (Q61P)

(6) Terminal screw

M3.5 x 7 screw

(7) Terminal cover

Protective cover of the terminal block

(8) Module fixing screw hole

Used to fix the module to the base unit.

M3 x 12 screw (user-prepared) (Tightening torque: 0.36 to 0.48 N·m)

(9) Module loading lever

Used to load the module into the base unit.

(Note 1) Q63P is dedicated for inputting a voltage of 24VDC. Q63P may break down unless connected to 24VDC for inputting or with reversed polarity.

(Note 2) Ensure that the earth terminals LG and FG are grounded. (Ground resistance: 100 or less) Since the LG terminals have potential of 1/2 input voltage, the operator may receive an electric shock when touching metal parts.

(Note 3) When Q61P, Q63P, Q64PN or Q64P is loaded on the extension base unit, a system error cannot be detected by the ERR terminal. (ERR terminal is always OFF.)

4.4 PLC CPU

For the further details than the following descriptions, refer to the following manuals:

MELSEC iQ-R CPU Module User's Manual (Startup) (SH(NA)-081263)

MELSEC iQ-R CPU Module User's Manual (Application) (SH(NA)-081264)

Outline dimension

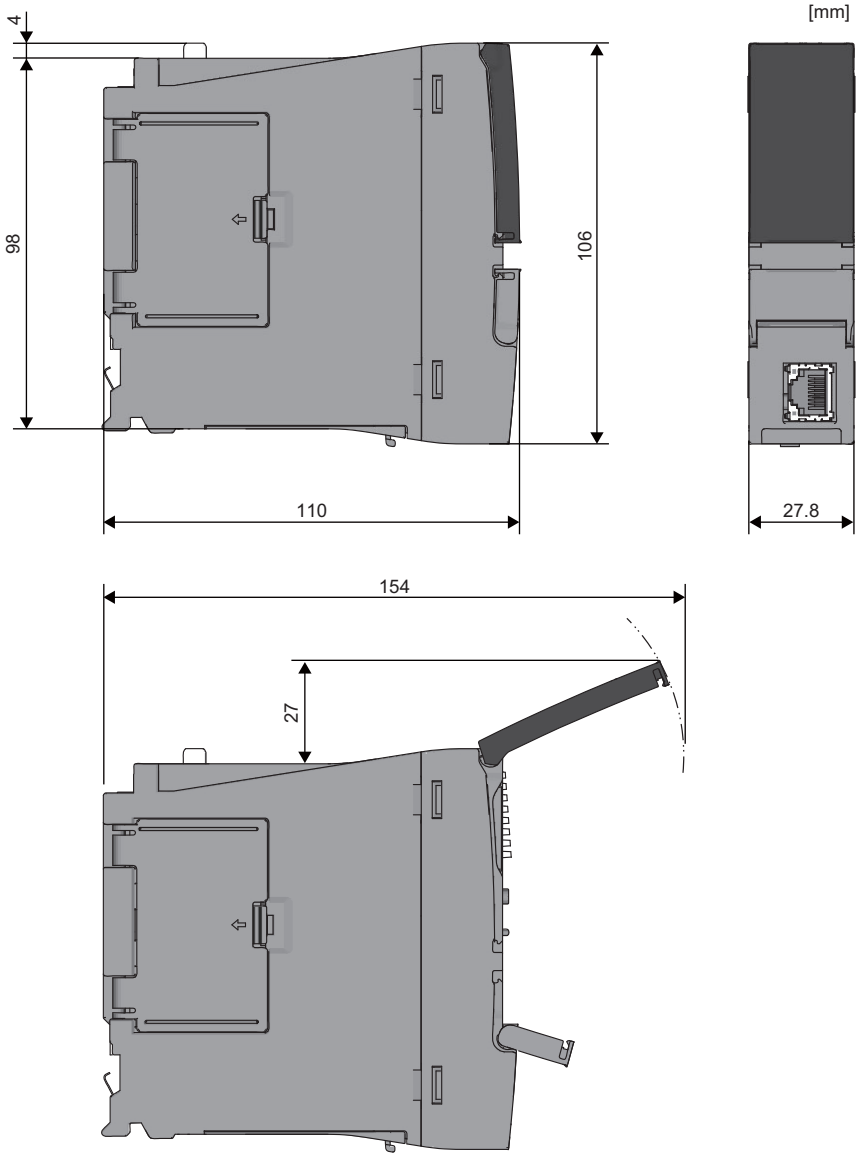

Names of parts

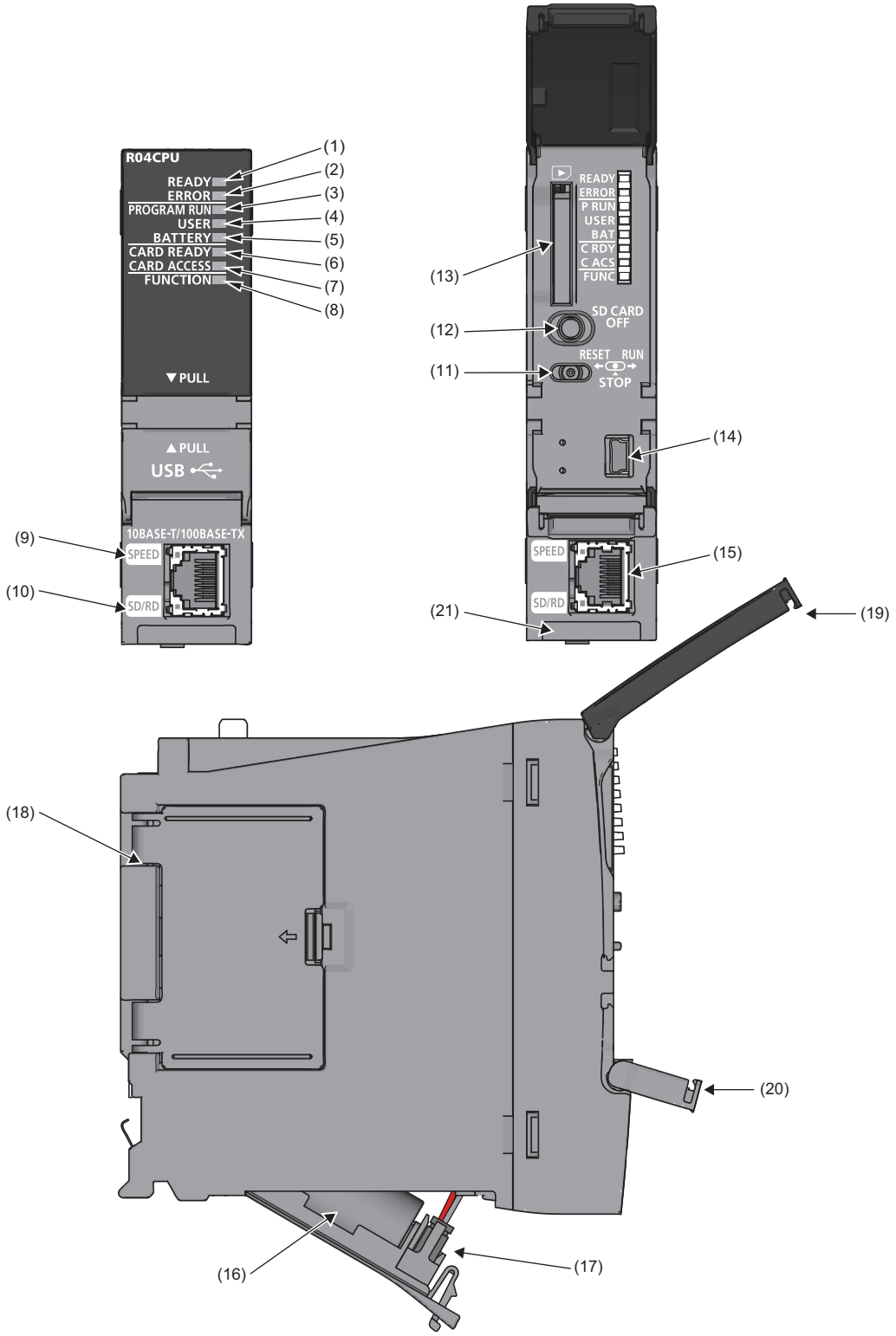

Number	Name	Details
(1)	READY LED	Indicates the operating status of the CPU module and the error level. [READY LED-ERROR LED status] On-off: Normal operation On-on: Minor error On-flashing: Moderate error Flashing-on: Minor error (Changing module online) Flashing (every 2s)-off: Initial processing Flashing (every 400ms)-off: Changing module online Off-on/flashing: Major error
(2)	ERROR LED	
(3)	PROGRAM RUN LED	Indicates the operating status of the program. On: Being executed (RUN state) Flashing: Being suspended (PAUSE state) Off: Stopped (STOP state) or stop error
	PROGRAM RUN LED (When the Process CPU is used in redundant mode)	Indicates the operating status of the program. (a) Control system (CTRL LED of the redundant function module: On) On: Being executed (RUN state) Flashing: Being suspended (PAUSE state) Off: Stopped (STOP state) or stop error (b) Standby system (SBY LED of the redundant function module: On) [Backup mode] On: Being executed (programs being executed in both systems) Flashing: Being suspended (PAUSE state) (programs being executed in both systems) Off: Stopped (STOP state/RUN state/PAUSE state) (no program being executed in both systems) or stop error [Separate mode] On: Being executed (RUN state) Flashing: Being suspended (PAUSE state) or waiting for state transition to RUN (same as STOP state) Off: Stopped (STOP state) or stop error (c) Systems not determined Flashing: Waiting for state transition to RUN by switch operation (same as STOP state) Off: Under normal operation
(4)	USER LED	Indicates the status of the annunciator (F). On: Annunciator (F) ON Off: Normal operation
(5)	BATTERY LED	Indicates the battery status. Flashing: Battery low Off: Normal operation
(6)	CARD READY LED	Indicates the availability of the SD memory card. On: Available Flashing: Ready Off: Not available or not inserted
(7)	CARD ACCESS LED	Indicates the access status of the SD memory card. On: Being accessed Off: Not accessed
(8)	FUNCTION LED	Indicates the status of the function being executed.
(9)	SPEED LED	Refer to the following. MELSEC iQ-R Ethernet/CC-Link IE User's Manual (Startup)
(10)	SD/RD LED	
(11)	RUN/STOP/RESET switch	A switch for controlling the operating status of the CPU module. RUN: Executes the program. STOP: Stops the program. RESET: Resets the CPU module. (Keep the switch in the RESET position for approximately one second.) Operate the RUN/STOP/RESET switch with your fingers. To prevent the switch from being damaged, do not use any tool such as a screwdriver.
(12)	SD memory card access control switch	A switch for disabling access to the SD memory card to remove it from the CPU module.
(13)	SD memory card slot	A slot where an SD memory card is inserted.
(14)	USB port (*1)	A connector for a USB-compatible peripheral. (connector type: miniB)
(15)	Ethernet port	Refer to the following. MELSEC iQ-R Ethernet/CC-Link IE User's Manual (Startup)
(16)	Battery	A backup battery to hold clock data and to use the backup power function for the device/label memory.
(17)	Battery connector pin	A pin for connecting a lead wire of the battery. To save the battery, the lead wire is disconnected from the connector before shipment.

Number	Name	Details
(18)	Cassette cover	A cover for the connector where an extended SRAM cassette is inserted. To use an extended SRAM cassette, open the cover, and insert the cassette.
(19)	LED cover	A cover for the LED indicators, SD memory card slot, and switches. Open this cover and insert or remove an SD memory card or set the RUN/STOP/RESET switch. Otherwise, keep the cover closed to prevent entry of foreign matter such as dust.
(20)	USB cover	A cover for the USB port. Open this cover and connect a USB-compatible peripheral. Otherwise, keep the cover closed to prevent entry of foreign matter such as dust.
(21)	Production information marking	Shows the production information (16 digits) of the module.

(*1) When a cable is connected to the USB connector at all times, clamp the cable. It prevents a poor connection, moving, and disconnection by unintentional pulling.

Battery life

There are two types of values for describing a battery life: actual service value and guaranteed value.

• Actual service value: The battery life estimated based on the value actually measured by Mitsubishi under a storage ambient temperature of 40 ℃ . This value varies depending on the characteristics and variation of the components, and should be referred to as a reference value.

• Guaranteed value: Refers to the battery life at 70℃ guaranteed by Mitsubishi in a storage ambient temperature of 70 ℃ based on the characteristics of the memory device provided by the component manufacturer.

[Actual service value (reference value)]

<table>
<tr><th rowspan="2">Extended SRAM cassette</th><th rowspan="2">Power-on time ratio (*1)</th><th colspan="2">Actual service value when used with the R04CPU</th><th colspan="2">Actual service value when used with the R08CPU, R16CPU, R32CPU, or R120CPU</th></tr>
<tr><th>Q6BAT</th><th>Q7BAT</th><th>Q6BAT</th><th>Q7BAT</th></tr>
<tr><td>Not used,
used (1MB type),
used (2MB type),
used (4MB type),
used (8MB type)</td><td>0 to 100%</td><td>43800 hours (5.00 years)</td><td rowspan="4">43800 hours (5.00 years)</td><td>43800 hours (5.00 years)</td><td rowspan="4">43800 hours (5.00 years)</td></tr>
<tr><td rowspan="3">Used (16MB type) (*2)</td><td>0%</td><td>30100 hours (3.43 years)</td><td>25500 hours (2.91 years)</td></tr>
<tr><td>30%</td><td>43000 hours (4.90 years)</td><td>36400 hours (4.15 years)</td></tr>
<tr><td>50 to 100%</td><td>43800 hours (5.00 years)</td><td>43800 hours (5.00 years)</td></tr>
</table>

[Guaranteed value]

<table>
<tr><th rowspan="2">Extended SRAM cassette</th><th rowspan="2">Power-on time ratio (*1)</th><th colspan="2">Guaranteed value when used with the R04CPU</th><th colspan="2">Guaranteed value when used with the R08CPU, R16CPU, R32CPU, or R120CPU</th></tr>
<tr><th>Q6BAT</th><th>Q7BAT</th><th>Q6BAT</th><th>Q7BAT</th></tr>
<tr><td rowspan="3">Not used</td><td>0%</td><td>31700 hours (3.61 years)</td><td rowspan="10">43800 hours (5.00 years)</td><td>30600 hours (3.49 years)</td><td rowspan="7">43800 hours (5.00 years)</td></tr>
<tr><td>30%</td><td rowspan="2">43800 hours (5.00 years)</td><td>43700 hours (4.98 years)</td></tr>
<tr><td>50 to 100%</td><td>43800 hours (5.00 years)</td></tr>
<tr><td rowspan="4">Used (1MB type)</td><td>0%</td><td>22000 hours (2.51 years)</td><td>21500 hours (2.45 years)</td></tr>
<tr><td>30%</td><td>31400 hours (3.58 years)</td><td>30700 hours (3.50 years)</td></tr>
<tr><td>50%</td><td rowspan="2">43800 hours (5.00 years)</td><td>43000 hours (4.90 years)</td></tr>
<tr><td>70 to 100%</td><td>43800 hours (5.00 years)</td></tr>
<tr><td rowspan="4">Used (2MB type)</td><td>0%</td><td>19600 hours (2.23 years)</td><td>19100 hours (2.18 years)</td><td>43100 hours (4.92 years)</td></tr>
<tr><td>30%</td><td>28000 hours (3.19 years)</td><td>27200 hours (3.10 years)</td><td rowspan="3">43800 hours (5.00 years)</td></tr>
<tr><td>50%</td><td>39200 hours (4.47 years)</td><td>38200 hours (4.36 years)</td></tr>
<tr><td>70 to 100%</td><td>43800 hours (5.00 years)</td><td>43800 hours (5.00 years)</td></tr>
<tr><td rowspan="4">Used (4MB type)</td><td>0%</td><td>15300 hours (1.74 years)</td><td>39600 hours (4.52 years)</td><td>15000 hours (1.71 years)</td><td>36200 hours (4.13 years)</td></tr>
<tr><td>30%</td><td>21800 hours (2.48 years)</td><td rowspan="3">43800 hours (5.00 years)</td><td>21400 hours (2.44 years)</td><td rowspan="3">43800 hours (5.00 years)</td></tr>
<tr><td>50%</td><td>30600 hours (3.49 years)</td><td>30000 hours (3.42 years)</td></tr>
<tr><td>70 to 100%</td><td>43800 hours (5.00 years)</td><td>43800 hours (5.00 years)</td></tr>
<tr><td rowspan="4">Used (8MB type)</td><td>0%</td><td>10100 hours (1.15 years)</td><td>26900 hours (3.07 years)</td><td>10000 hours (1.14 years)</td><td>24800 hours (2.83 years)</td></tr>
<tr><td>30%</td><td>14400 hours (1.64 years)</td><td>38400 hours (4.38 years)</td><td>14200 hours (1.62 years)</td><td>35400 hours (4.04 years)</td></tr>
<tr><td>50%</td><td>20200 hours (2.30 years)</td><td rowspan="3">43800 hours (5.00 years)</td><td>20000 hours (2.28 years)</td><td rowspan="3">43800 hours (5.00 years)</td></tr>
<tr><td>70%</td><td>33600 hours (3.83 years)</td><td>33300 hours (3.80 years)</td></tr>
<tr><td>100%</td><td>43800 hours (5.00 years)</td><td>43800 hours (5.00 years)</td></tr>
<tr><td rowspan="5">Used (16MB type) (*2)</td><td>0%</td><td>6400 hours (0.73 years)</td><td>16100 hours (1.83 years)</td><td>6400 hours (0.73 years)</td><td>16000 hours (1.82 years)</td></tr>
<tr><td>30%</td><td>9100 hours (1.03 years)</td><td>23000 hours (2.62 years)</td><td>9100 hours (1.03 years)</td><td>22800 hours (2.62 years)</td></tr>
<tr><td>50%</td><td>12800 hours (1.46 years)</td><td>32200 hours (3.67 years)</td><td>12800 hours (1.46 years)</td><td>32000 hours (3.65 years)</td></tr>
<tr><td>70%</td><td>21300 hours (2.43 years)</td><td rowspan="2">43800 hours (5.00 years)</td><td>21300 hours (2.43 years)</td><td rowspan="2">43800 hours (5.00 years)</td></tr>
<tr><td>100%</td><td>43800 hours (5.00 years)</td><td>43800 hours (5.00 years)</td></tr>
</table>

(*1) The power-on time ratio indicates the ratio of the programmable controller power-on time to 24 hours. (If the total power-on time is 12 hours, the ratio will be 50%. If the total power-on time is 6 hours, the ratio will be 25%.)

(*2) To use the extended SRAM cassette (16MB type) with the RnCPU, check the version of the CPU module and engineering tool.

4.5 CNC CPU Module

Dimension and Names of parts

[mm]

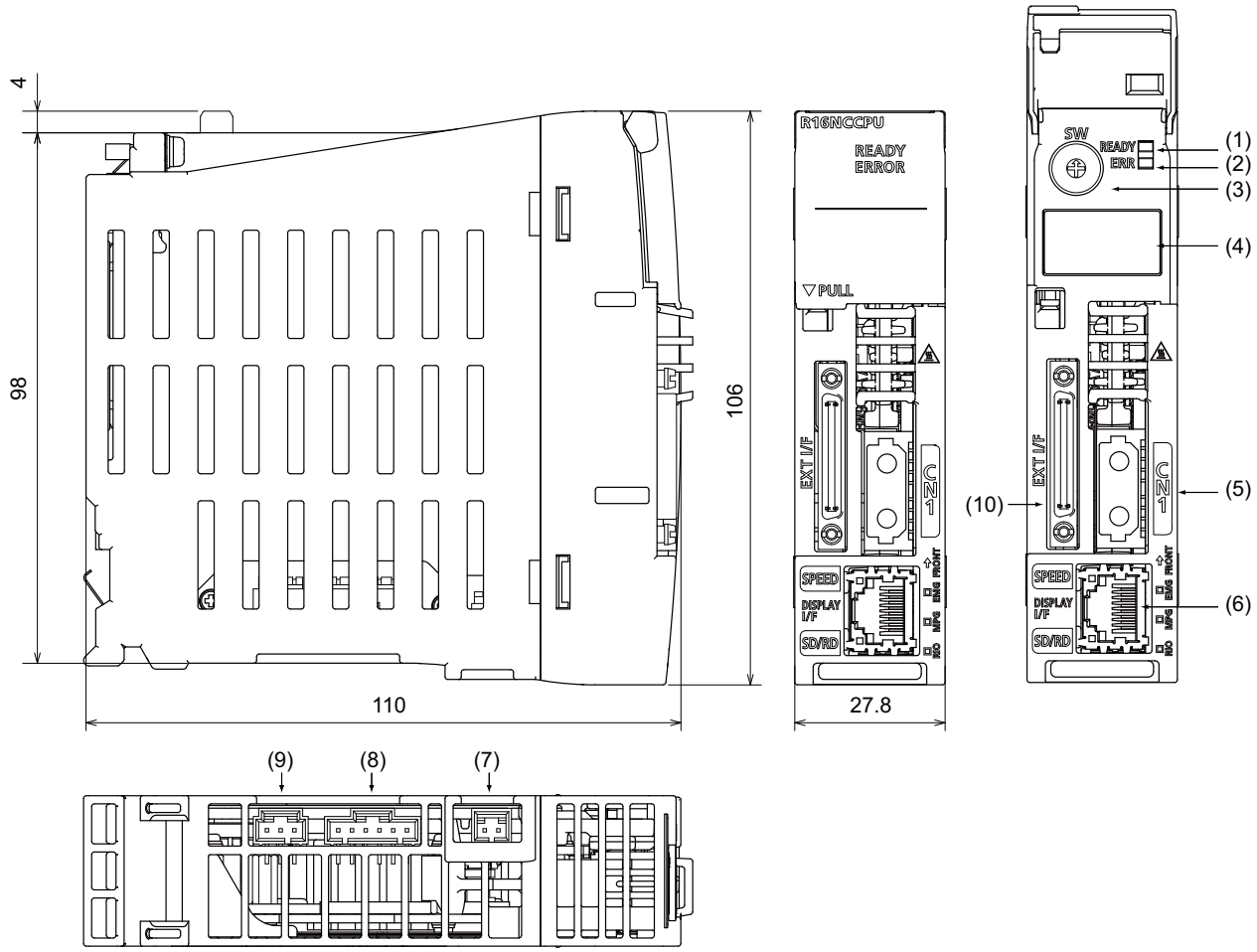

(1) READY LED

(2) ERROR LED

The operating state and the error state of CNC CPU will be displayed.

READY LED	ERROR LED	Operating state
Not lit	Not lit	Power OFF or hardware failure
Flashing	Not lit	Initializing
Lit	Not lit	Under normal operation
Lit	Flashing	Occurrence of a moderate error
Not lit	Lit or flashing	Occurrence of a severe error

(3) SW

Rotary switch for maintenance (usually set to "0")

(4) Dot matrix LED

The operating state and the error information will be displayed. (3 digits)

(5) CN1

Connector for servo/spindle drive unit

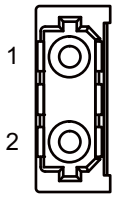

1	IN	RD
2	OUT	TD

(6) DISPLAY I/F

Connector for display (GOT)

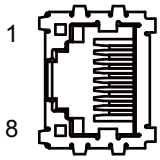

1	OUT	TD+
2	OUT	TD-
3	IN	RD+
4		CMTR
5		CMTR
6	IN	RD-
7		CMIT
8		CMIT

(7) EMG

Connector for the emergency stop signal input

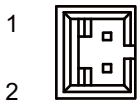

70553-0001
(MOLEX)

1		SG(0V)
2	IN	EMG

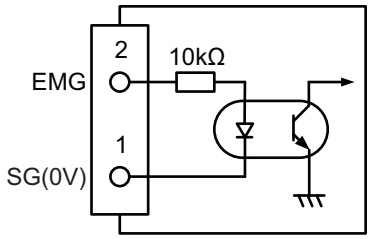

Input type: Current sinking/sourcing
Insulation method: Optocoupler insulation
Input voltage: 24VDC (+10%, -15%, ripple ratio within 5%)
OFF voltage/current : 17.5VDC or more / 3.0mA or less
ON voltage/current : 1.8VDC or less / 0.18mA or less
Input resistance: Approximate 10kΩ
Response time (OFF -> ON or ON -> OFF): 1ms
Applicable size of wire : 0.3mm^2

(8) MPG

Connector for 5V manual pulse generator

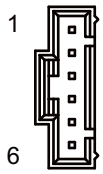

70553-0005
(MOLEX)

1	OUT	5VDC
2	IN	HA1
3	IN	HB1
4	OUT	SG(0V)
5		-
6		FG

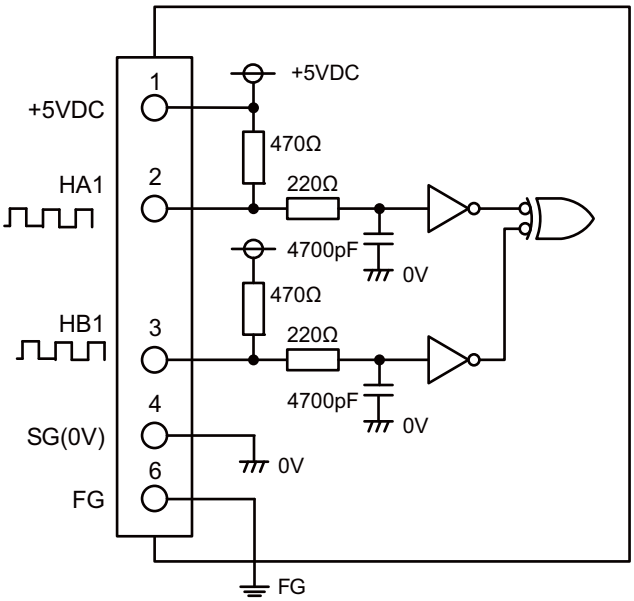

Input pulse signal type: 90°phase difference between HA1 and HB1
Max. input pulse frequency: 5kHz
Number of pulses per rotation: 100pulse/rev
Input signal voltage: H level 3.5V to 5.25V, L level 0V to 0.5V
For pulse generators
Power voltage for pulse generators : 5VDC±10%
Max. output current: 100mA

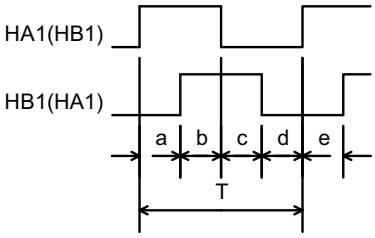

a.b.c.d.e: HA1 or HB1 rising edge (falling edge) phase difference = T/4 ± T/10
T: Ha1 or HB1 phase cycle (Min. 10 μ s)

(9) RIO

Connector for Dual signal module

70553-0002
(MOLEX)

1	IN/OUT	RXTXH
2	IN/OUT	RXTXL
3		SG(0V)

(10) EXT I/F

Connector for the expansion connection of skip signal/ 5V manual pulse generator

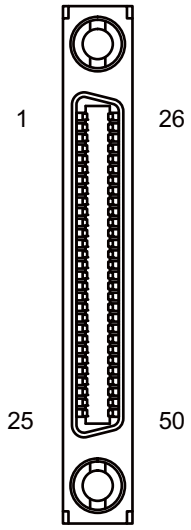

HDR-EC50LFDT1-SDL+
(HONDA)

1	OUT	5VDC		26	OUT	5VDC
2	OUT	5VDC		27	OUT	5VDC
3	OUT	SG(0V)		28	OUT	SG(0V)
4	(Reserve)			29	OUT	SG(0V)
11				30	(Reserve)	
				36		
12	OUT	SG(0V)		37	OUT	SG(0V)
13		(Reserve)		38		(Reserve)
14		(Reserve)		39		(Reserve)
15	OUT	SG(0V)		40	OUT	SG(0V)
16		(Reserve)		41		(Reserve)
17	OUT	SG(0V)		42	OUT	SG(0V)
18	IN	HA3		43	IN	HB3
19	IN	HA2		44	IN	HB2
20	IN	HA1		45	IN	HB1
21		(Reserve)		46		(Reserve)
22		(Reserve)		47		(Reserve)
23	IN	SKIPCOM		48	IN	SKIPCOM
24	IN	SKIP1		49	IN	SKIP2
25	IN	SKIP3		50	IN	SKIP4

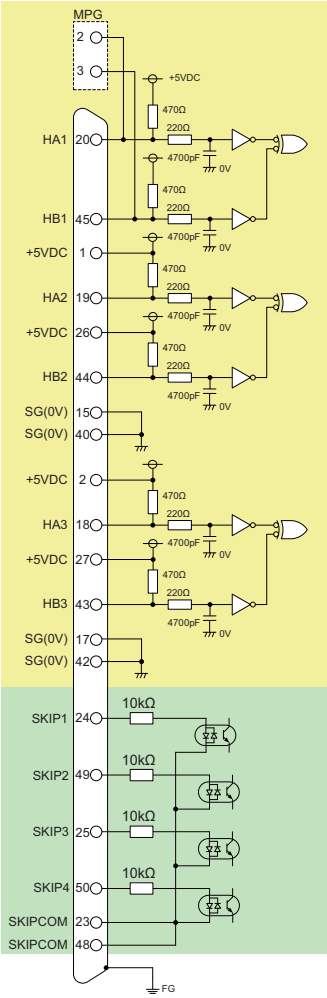

---Manual pulse generator I/F specification----
Input pulse signal type: 90°phase difference between HA1 and HB1.
Max. input pulse frequency : 5kHz
Number of pulses per rotation: 100pulse/rev
Input signal voltage : H level 3.5V to 5.25V, L level 0V to 0.5V
Output power voltage : +5VDC -10% -10%
Max. output current : 100mA

(Note) The connector MPG and EXT I/F have input pins for HA1 and HB1. Use either of the connectors. Use either of the connectors.

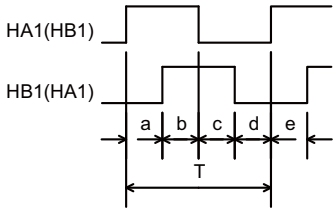

a.b.c.d.e: HA1 or HB1 rising edge (falling edge) phase difference = T/4 ± T/10
T: Ha1 or HB1 phase cycle (Min. 10μs)

---SKIP I/F specification---
Input ON voltage : 18V or more to 25.2V or less
Input ON current : 2mA or more
Input OFF voltage : 4V or less
Input OFF current : 0.4mA or less
Input signal holding time (Ton) : 2ms or more
Internal response time : 0.08ms or less

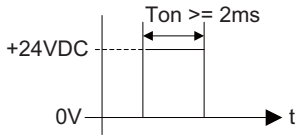

(Note) NC recognizes input signals of 2ms or more as the valid skip signals. If machine contacts (relay, etc.) are used, malfunctions will occur due to chattering. Use semiconductor contacts (transistor, etc.).

4.6 Dual Signal Module

Use the dual signal module within the following specifications.

Items		Specifications
		R173SXY
Number of input points		32 points x 2 systems (32 points for PLC CPU control + 32 points for CNC CPU control, 20 points x 2 systems for safety input, 12 points x 2 systems for feedback input for output)
Input insulation method		Optocoupler insulation
Rated input voltage		24VDC (+20/-15%, ripple ratio within 5%)
Rated input current		Approximate 4mA
Input derating		Refer to the derating figure
ON voltage/ON current		19V or more/3mA or more
OFF voltage/OFF current		4V or less / 1.7mA or less
Input resistance		Approximate 5.6kΩ
Input response time		1ms
Input common method		32 points/common (Common terminal 1A01, 1A02, 2A01, 2A02) (Each part-system has a different common.)
Input type		Type 1, Current sinking
Number of output points		12 points x 2 systems
Output insulation method		Optocoupler insulation
Rated load voltage		24VDC (+20/-15%)
Maximum load current		(0.1A x 8 points, 0.2A x 4 points) x 2 systems Common current: 1.6A or less for each connector
Utilization category		DC12/DC13
Maximum rush current		0.7A,10ms or less (1.4A, 10ms or less for 0.2A output pin)
OFF-time leakage current		0.1mA or less
ON-time maximum voltage drop		0.1VDC(TYP.)0.1A, 0.2VDC(MAX.)0.1A
Output response time		1ms or less (at rated load and resistance load)
Output common method		12 points/common (Common terminal 1B01, 1B02, 2B01, 2B02) (Each part-system has a different common.)
Output		Current sourcing
Surge suppressor		Zener diode
Fuse		Not provided
External power supply	Voltage	24VDC (+20/-15%, ripple ratio within 5%)
	Electric current	40mA
Protection		Provided (thermal protection and short circuit protection) Thermal protection works for each 2 points. Short circuit protection works for each 1 point. (1 to 3A/point)
Withstand voltage		560VAC rms/3cycles (at 2000m elevation)
Insulation resistance		10MΩ or more (measured with an insulation resistance tester)
Noise withstand level		Simulator noise 500Vp-p, Noise width 1μs measured with a noise simulator with noise frequency 25 to 60Hz
		First transient noise IEC61000-4-4: 1kV
Protection degree		IP2X
Number of I/O occupational points		32 points (with I/O assignments as 32 points I/O mixed unit)
Operation display		ON display (LED) and 32 input points display for PLC CPU control
External connection method		40-pin connector
Applicable size of wire		0.3mm^2 (for A6CON1 and A6CON4)
Connector for external wiring		A6CON1, A6CON2, A6CON3, A6CON4 (sold separately)
Terminal block changeover unit		FA-LTB40P (Cable FA-CBL □□ FMV-M)
5VDC internal power dissipation		200mA (TYP. when all points are ON)
Mass		0.14kg

Names of parts

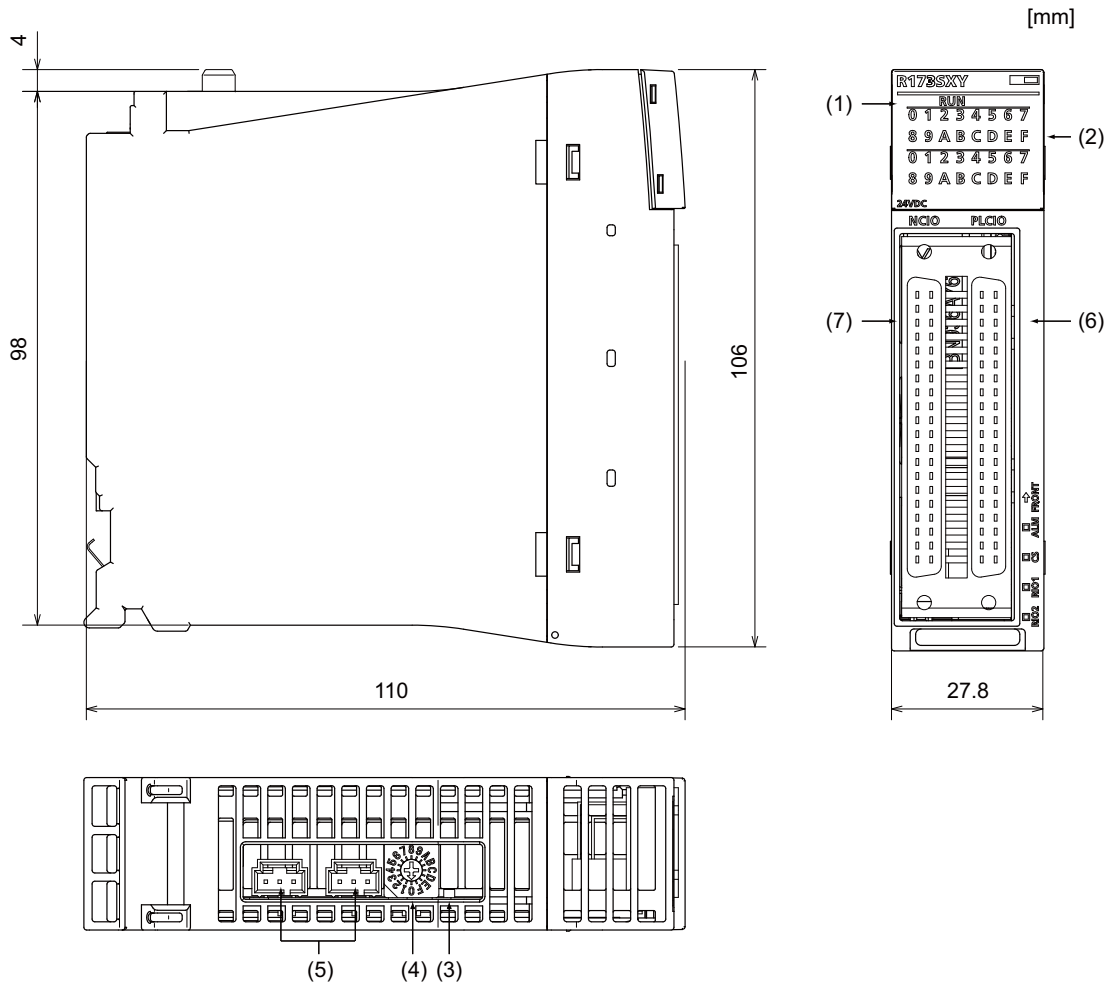

(1) RUN LED

Shows the operating state of the dual signal module.

(2) LED

Shows the input signal state of PLCIO (part-system 2).

(3) ALM LED

Shows the communication state with the CNC CPU module.

(4) RSW

Rotary switch for station No. setting Set within the range of 0 to 2.

(5) RIO1/RIO2

Connector for connecting the CNC CPU module and the 2nd or subsequent dual signal module.

1

3

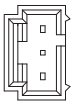

70553-0005
(MOLEX)

1	IN/OUT	RXTXH
2	IN/OUT	RXTXL
3		SG(V)

(6) NCIO

Part-system 1 I/O signal connector

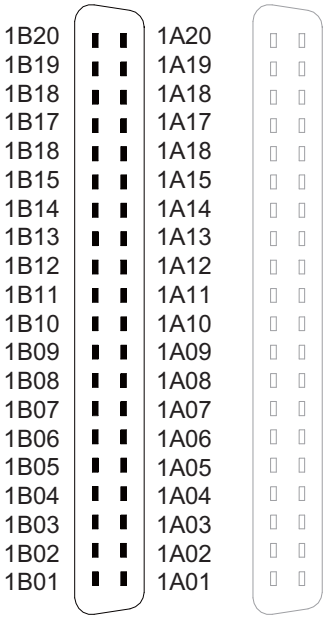

1B20	IN	NC-X00		1A20	IN	NC-X10
1B19	IN	NC-X01		1A19	IN	NC-X11
1B18	IN	NC-X02		1A18	IN	NC-X12
1B17	IN	NC-X03		1A17	IN	NC-X13
1B16	IN	NC-X04		1A16	IN	NC-X14
1B15	IN	NC-X05		1A15	IN	NC-X15
1B14	IN	NC-X06		1A14	IN	NC-X16
1B13	IN	NC-X07		1A13	IN	NC-X17
1B12	IN	NC-X08		1A12	IN	NC-X18
1B11	IN	NC-X09		1A11	IN	NC-X19
1B10(*)	IN/OUT	NC-Y0A/PC-X0A		1A10(*)	IN/OUT	NC-Y1A/PC-X1A
1B09(*)	IN/OUT	NC-Y0B/PC-X0B		1A09(*)	IN/OUT	NC-Y1B/PC-X1B
1B08	IN/OUT	NC-Y0C/PC-X0C		1A08	IN/OUT	NC-Y1C/PC-X1C
1B07	IN/OUT	NC-Y0D/PC-X0D		1A07	IN/OUT	NC-Y1D/PC-X1D
1B06	IN/OUT	NC-Y0E/PC-X0E		1A06	IN/OUT	NC-Y1E/PC-X1E
1B05	IN/OUT	NC-Y0F/PC-X0F		1A05	IN/OUT	NC-Y1F/PC-X1F
1B04		---		1A04		---
1B03		---		1A03		---
1B02		24VDC(COM1)		1A02		0V(COM2)
1B01		24VDC(COM1)		1A01		0V(COM2)

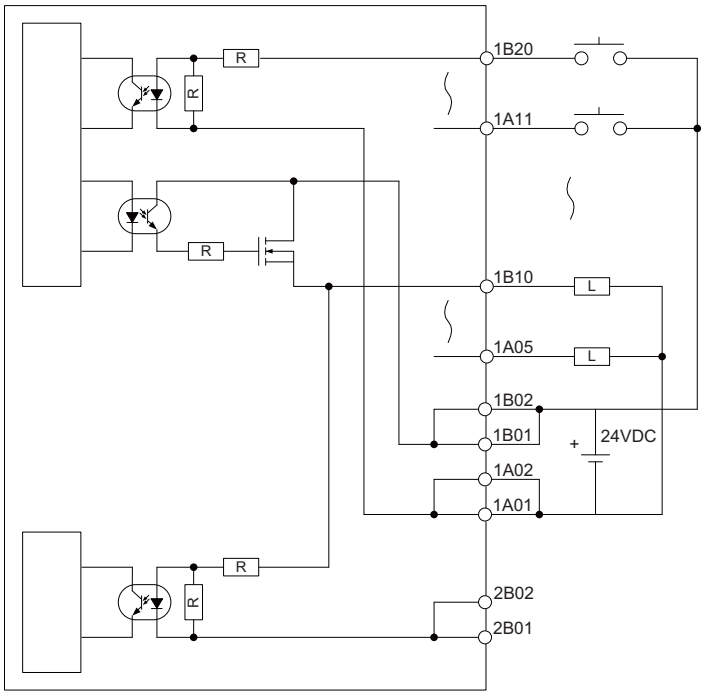

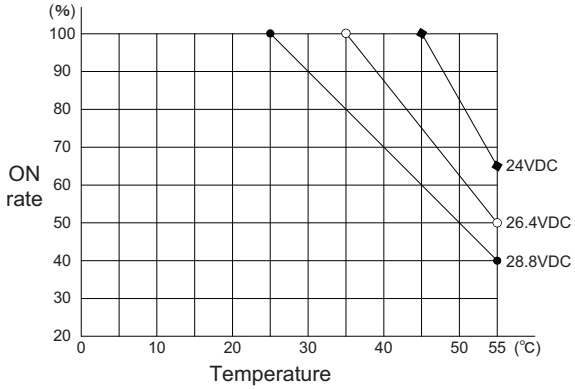

(Note 1) Output pins with (*) allow 0.2A output. Other pins have 0.1A output.

(Note 2) Pins with signal names "NC-Y0A" and "NC-X0A" are the output signals controlled by CNC CPU. When any of the signals is output to Y0A, the signal is input to X0A as a feedback signal.

(Note 3) The device Nos. written above are for the assignment on hardware. These Nos. are different from the device Nos. to be actually used.

(7) PLCIO

Part-system 2 I/O signal connector

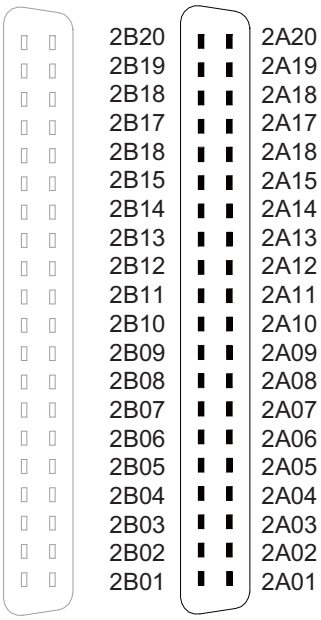

2B20	IN	PC-X00		2A20	IN	PC-X10
2B19	IN	PC-X01		2A19	IN	PC-X11
2B18	IN	PC-X02		2A18	IN	PC-X12
2B17	IN	PC-X03		2A17	IN	PC-X13
2B16	IN	PC-X04		2A16	IN	PC-X14
2B15	IN	PC-X05		2A15	IN	PC-X15
2B14	IN	PC-X06		2A14	IN	PC-X16
2B13	IN	PC-X07		2A13	IN	PC-X17
2B12	IN	PC-X08		2A12	IN	PC-X18
2B11	IN	PC-X09		2A11	IN	PC-X19
2B10(*)	IN/OUT	PC-Y0A/NC-X0A		2A10(*)	IN/OUT	PC-Y1A/NC-X1A
2B09(*)	IN/OUT	PC-Y0B/NC-X0B		2A09(*)	IN/OUT	PC-Y1B/NC-X1B
2B08	IN/OUT	PC-Y0C/NC-X0C		2A08	IN/OUT	PC-Y1C/NC-X1C
2B07	IN/OUT	PC-Y0D/NC-X0D		2A07	IN/OUT	PC-Y1D/NC-X1D
2B06	IN/OUT	PC-Y0E/NC-X0E		2A06	IN/OUT	PC-Y1E/NC-X1E
2B05	IN/OUT	PC-Y0F/NC-X0F		2A05	IN/OUT	PC-Y1F/NC-X1F
2B04		---		2A04		---
2B03		---		2A03		---
2B02		24VDC(COM1)		2A02		0V(COM2)
2B01		24VDC(COM1)		2A01		0V(COM2)

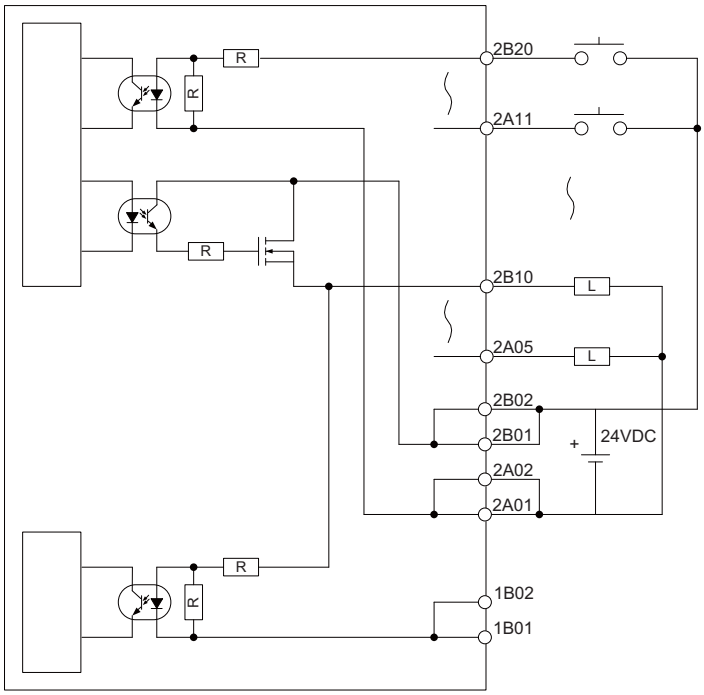

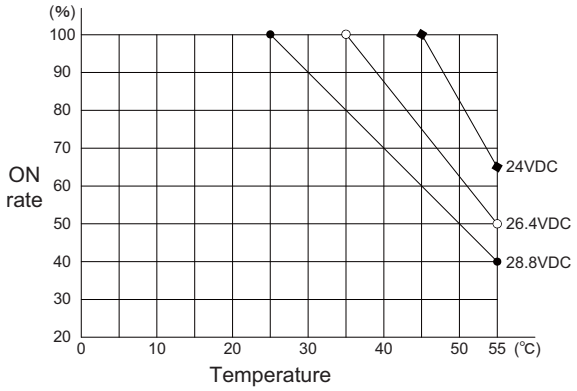

(Note 1) Output pins with (*) allow 0.2A output. Other pins have 0.1A output.

(Note 2) The device Nos. written above are for the assignment on hardware. These Nos. are different from the device Nos. to be actually used.

<Cable side connector type>

Connector type	Pressure displacement type	Crimp-contact type	Soldering type
Connector	FCN-367J040-AU/F	FCN-363J040	FCN-361J040-AU
Contact	-	AWG#24 to #28: FCN-363J-AU AWG#22 to #26: FCN-363J-AU/S	-
Case	-	FCN-360C040-B FCN-360C040-D (Wide-mouthed type) FCN-360C040-E (Long screw type)	
		-	FCN-360C040-H/E (Side-mouthed type) FCN-360C040-J1 (Sloped-mouth cover) FCN-360C040-J2 (Thin sloped-mouth cover)
Manufacturer	FUJITSU Component		

4.7 Signal Splitter

(Note) Signal splitter allows DIN rail installation only.

Dimension and Names of parts

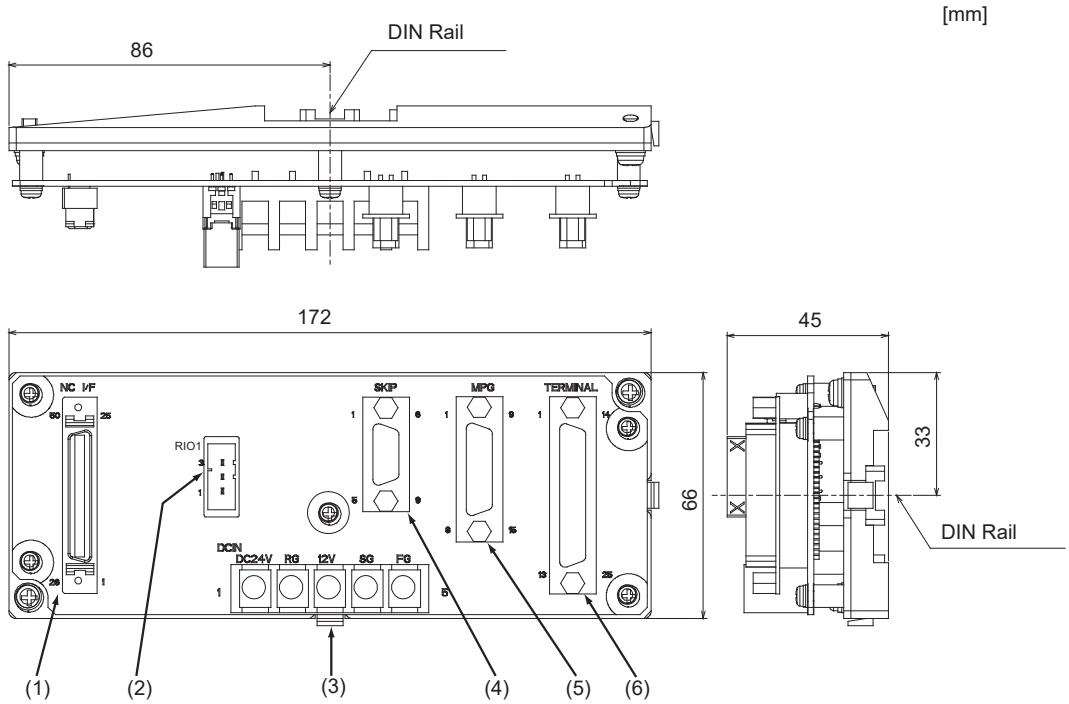

(1) NC I/F

Connector for CNC CPU

(2) RIO1

(Not used)

(3) DCIN

Terminal block for power supply (Used for the 12V power supply type manual pulse generator)

(4) SKIP

Connector for skip signal

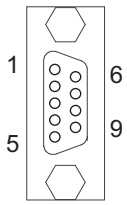

D-SUB 9pin

1	IN	SKIP1
2	IN	SKIP2
3	IN	SKIP3
4	IN	SKIP4
5		---

6	IN	COM1
7	IN	COM2
8	IN	COM3
9	IN	COM4

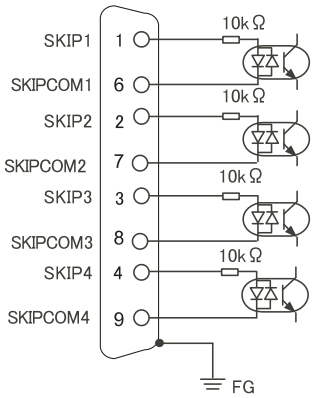

---SKIP I/F specification---
Input ON voltage: 18V or more to 25.2V or less
Input ON current: 6mA or more
Input OFF voltage: 4V or less
Input OFF current: 2mA or less
Input signal holding time (Ton): 2ms or more
Internal response time: 0.08ms or less
(Note) NC recognizes input signals of 2ms or more as the valid skip signals. If machine contacts (relay, etc.) are used, malfunctions will occur due to chattering. Use semiconductor contacts (transistor, etc.).

(5) MPG

5V/12V Connector for manual pulse generator

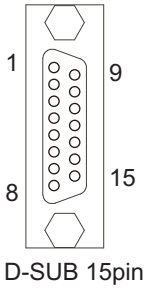

1	IN	HA1
2	IN	HB1
3	IN	HA2
4	IN	HB2
5	IN	HA3
6	IN	HB3
7	OUT	+5VDC
8	OUT	+5VDC

9	OUT	SG(0V)
10	OUT	+12VDC
11	OUT	SG(0V)
12	OUT	+12VDC
13	OUT	SG(0V)
14	OUT	+12VDC
15		---

	5V manual pulse generator (UFO-01-2Z9) input conditions	12V manual pulse generator (HD60C) input conditions
Input pulse signal type	HA1 and HB1 phases (with phase difference 90°) (Refer to the waveform below.)	
Input signal voltage	H level 3.5V to 5.25V L level 0V to 0.5V	
Max. input pulse frequency	5kHz	
Pulse generators power supply voltage	5VDC±10%	12VDC±10%
Current consumption	100mA or less	
Number of pulses per rotation	100 pulse/rev	25 pulse/rev

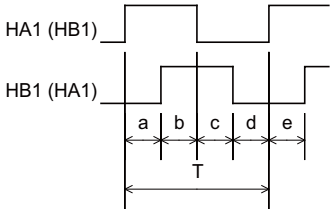

a.b.c.d.e: HA1 or HB1 rising edge (falling edge) phase difference = T/4 ± T/10

T: HA1 or HB1 cycle (Min. 10 μ s)

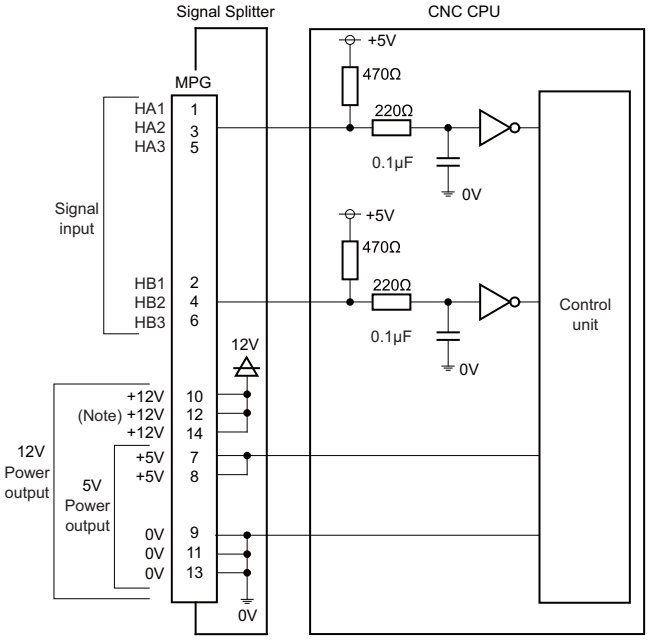

(Note) 12V power is separately required to connect 12V manual pulse generator.
(Refer to "6.9 Connecting the Manual Pulse Generator".)

(6) TERMINAL

(Not used)

4.8 Manual Pulse Generator

4.8.1 5V Manual Pulse Generator (UFO-01-2Z9)

100 pulse/rev

[Outline dimension]

[mm]

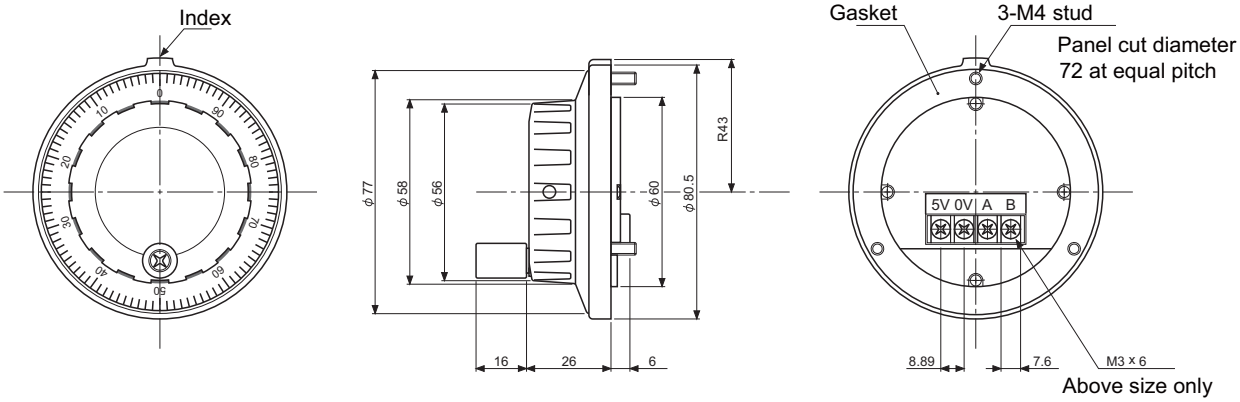

[Panel cut dimension]

[mm]

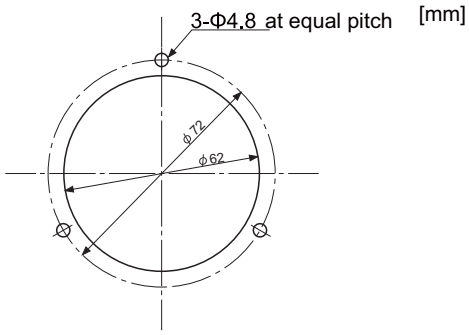

Produced by NIDEC NEMICON CORPORATION

4.8.2 12V Manual Pulse Generator (HD60C)

25 pulse/rev

[Outline dimension]

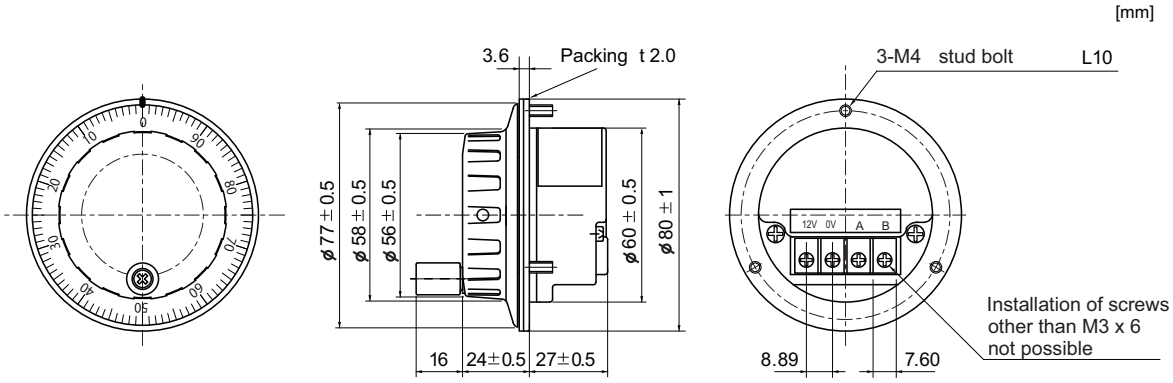

[Panel cut dimension]

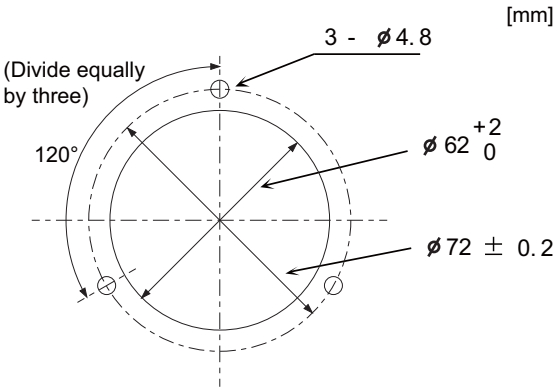

4.9 Recommended Terminal Block for Dual Signal Module

Terminal block converter module FA-TBS40P or FA-LTB40P, produced by MITSUBISHI ELECTRIC ENGINEERING, is recommended to connect the dual signals to the dual signal module. Use the connection cable FA-CBL □□ FMV-M produced by MITSUBISHI ELECTRIC ENGINEERING.
[MITSUBISHI ELECTRIC ENGINEERING: http://www.mee.co.jp]

4.10 GOT (Panel Cut Dimensions)

Make an installation hole on the control panel with the dimensions as shown below.

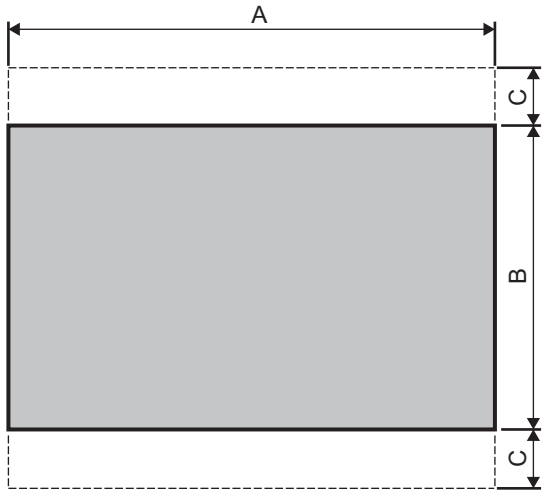

Horizontal

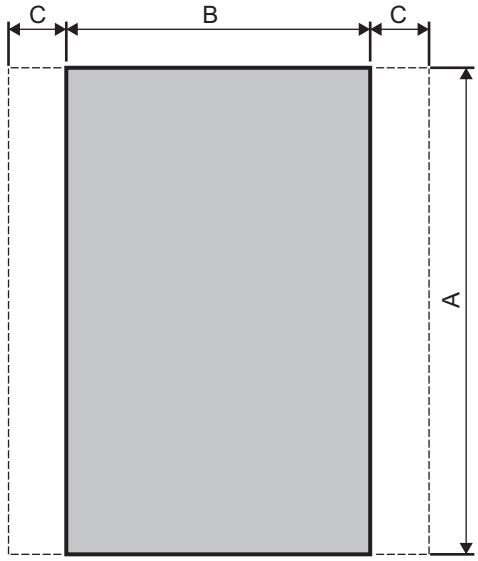

Vertical

Unit: mm

Model	A	B	C	Panel thickness
GT2715-X	383.5^{+2}_{0}	282.5^{+2}_{0}	10 or More	1.6 to 4
GT2712-S	302^{+2}_{0}	200^{+2}_{0}		
GT2710-S,GT2710-V	289^{+2}_{0}	228^{+2}_{0}		
GT2708-S,GT2708-V	227^{+2}_{0}	176^{+2}_{0}		
GT2705-V	153^{+2}_{0}	121^{+2}_{0}		
GT2512-S	302^{+2}_{0}	228^{+2}_{0}		
GT2510-V	289^{+2}_{0}	200^{+2}_{0}		
GT2508-V	227^{+2}_{0}	176^{+2}_{0}		

The C dimension shows the measurements for installing fittings on the control panel.

5

Installation

5.1 Module Installation

5.1.1 Precautions for Handling

⚠ CAUTION

⚠ Use C80 in an environment that meets the general specifications contained in this manual.
Using C80 in an environment outside the range of the general specifications could result in electric shock, fire, operation failure, and damage to or deterioration of the product.

⚠ When mounting the module, be sure to insert the module fixing hook on the module's bottom into the module fixing hole on the base unit. Incorrect mounting could cause an operation failure or a damage/drop of the unit.

⚠ Hold down the module loading lever at the module bottom and securely insert the fixing hook into the fixing hole in the base unit. Install the module with the module fixing hole as a supporting point. Incorrect mounting could cause an operation failure or a damage/drop of the unit.

⚠ Be sure to fix all the modules with screws to prevent them from dropping.
The fixing screws (M3 x 12) are to be prepared by user.

⚠ Tighten the screw in the specified torque range. Under tightening may cause a drop, short circuit or operation failure. Over tightening may cause a drop, short circuit or operation failure due to damage to the screw or module.

⚠ Be sure to install the extension cable to connectors of the basic base unit correctly. After installation, check them for looseness. Poor connections could cause an input or output failure.

⚠ Completely turn off all lines of external power supply used in the system before loading or unloading the module. Not doing so could result in electric shock or damage to the product.

⚠ Do not mount/dismount the modules or base over 50 times. Mounting/dismounting over 50 times may cause an operation failure.

⚠ Do not directly touch the module's conductive parts or electronic parts. Touching these parts could cause an operation failure or give damage to the module.

⚠ Do not touch the radiating fin of the CNC CPU module while an electric current is supplied or in a short while after the power OFF. Touching the fin may cause burns. Take care when removing the unit.

⚠ When removing the unit, always remove the fixing screws and then take the fixing hook out from the fixing hole. Incorrect removal will damage the module fixing hook.

This section describes precautions for handling the CPU modules, I/O modules, power supply modules and basic base unit, etc.

(1) Do not drop or apply strong impact on the modules, terminal block connectors and pin connectors.

(2) Do not remove modules printed circuit boards from the case. If you remove them from the case, it may result in damage.

(3) The module fixing screws and terminal block screws within the tightening torque range specified below:

Location of screw	Tightening torque range
Module fixing screw (M3x12)	0.36 to 0.48N·m
Terminal block screw (M3)	0.42 to 0.58N·m
Terminal block mounting screw (M3.5)	0.66 to 0.89N·m
Connector screw (M2.6)	0.20 to 0.29N·m
Terminal screw (M4) of a power supply module	1.02 to 1.38N·m
Terminal screw (M3.5) of a power supply module	0.66 to 0.89N·m

(4) Make sure to install the power supply module on the basic base unit and extension base unit. When the power supply module is not installed and if the I/O modules and intelligent function module installed on the basic base unit are light load type, the modules may be operated. In this case, because a voltage becomes unstable, we cannot guarantee the operation.

(5) When an extension cable is used, do not bind the cable together with the main circuit (high voltage, heavy current) line or lay them close to each other. Keep the cable at least 100 mm away from the line.

(6) Be sure to use the fixing screws and fix the basic base unit on the panel to avoid an operation failure due to vibrations.
Install the basic base unit in the following procedure.

(a) Fit the two fixing screws for top of the basic base unit to the panel.

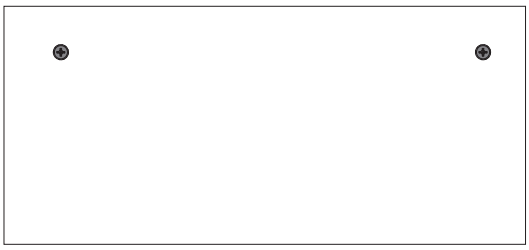

(b) Place the right-hand side notch of the basic base unit onto the right-hand side screw.

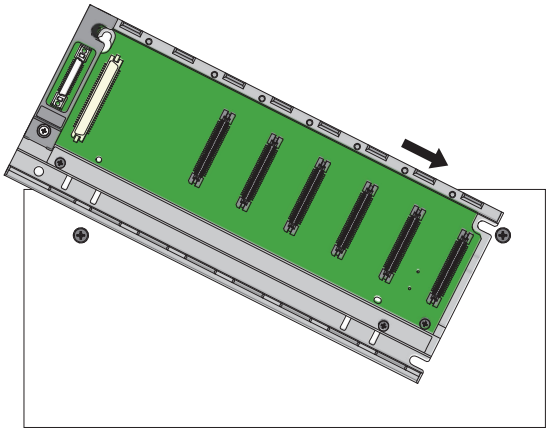

(c) Place the left-hand side pear-shaped hole of the basic base unit onto the left hand side screw.

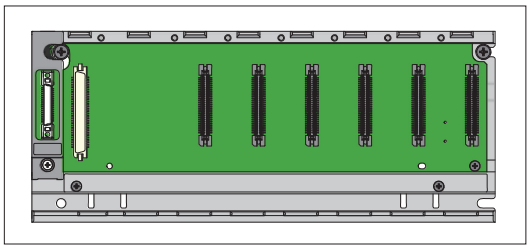

(d) Fit the fixing screws into the fixing screw holes in the basic base unit bottom and re-tighten all the fixing screws.

(Note) Install the basic base unit to a panel, with no module installed in the right slot.
Remove the basic base unit after unloading the module from the right-end slot.

5.1.2 Precautions for Installation of Basic Base Unit

Install C80 to a panel, etc., considering enough about usability, maintainability and environmental resistance.

(1) Unit installation position

For enhanced ventilation and ease of module replacement, leave the following space between the module top/bottom and structure/parts.

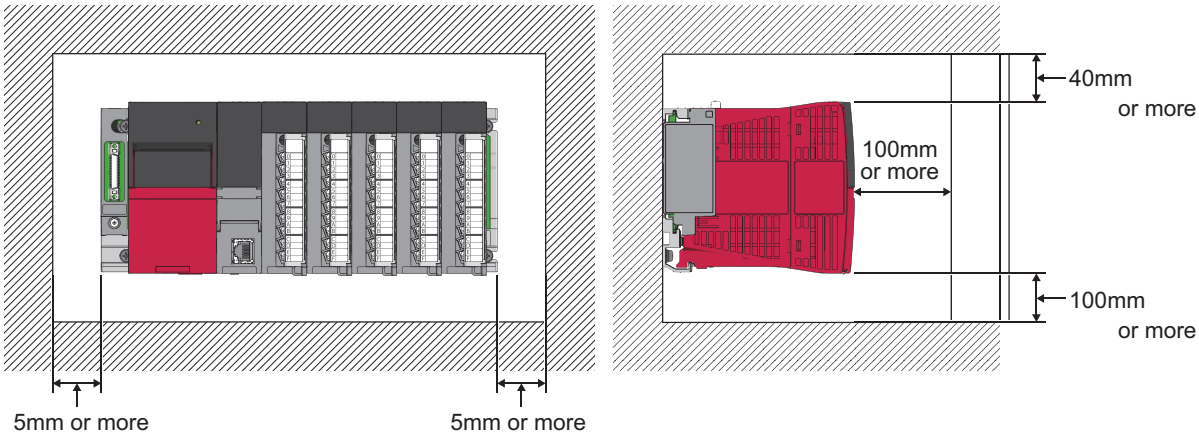

A shaded area shows the ceiling of a control panel, wiring duct, or parts.

(2) Unit installation orientation

(a) Since C80 generates heat, it should be fitted on a well ventilated location in the orientation shown below for heat release.

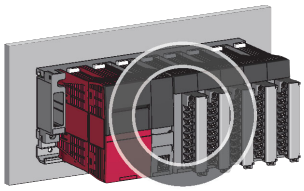

(b) Do not use it in either of the orientations shown below.

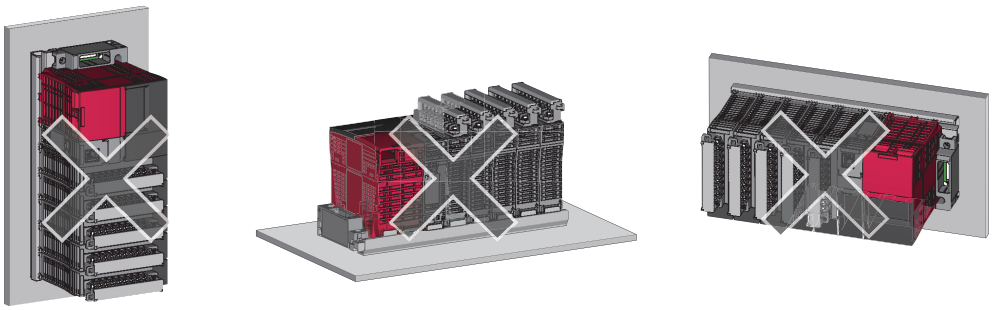

(3) Installation surface

Fit the base unit on a flat surface.

If the installation surface is not even, this may strain the printed circuit boards and cause malfunctions.

(4) Installation of the unit in an area where the other devices are installed

Avoid fitting basic unit in proximity to vibration sources such as large electromagnetic contractors and nofuse circuit breakers; fit the unit on a separate panel or at a distance.

(5) Distances from the other devices

In order to avoid the effects of radiated noise and heat, provide the clearances indicated below between C80 and the other devices (contactors and relays).

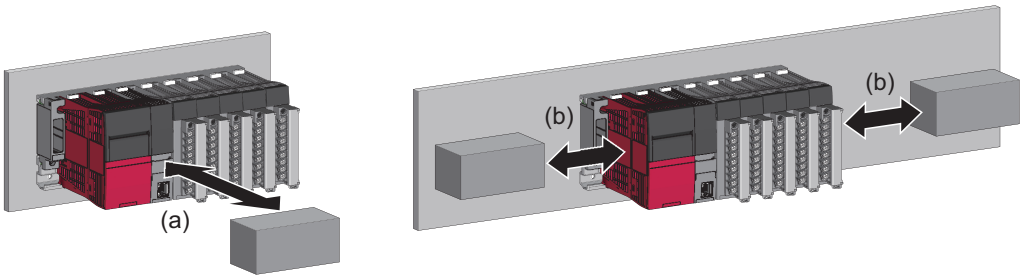

(a) A device in front of C80: 100mm or more

(b) A device on the right and left of C80: 50mm or more

5.1.3 Module Installation and Removal

This section explains how to install and remove a power supply module, PLC CPU module, CNC CPU module, input/output module and intelligent function module or another module to and from the base unit.

[Installation]

(1) When a cap is attached to the module connector of the base unit, remove it.

(2) Place the concave part (a) of a module onto the guide (b) of the base unit.

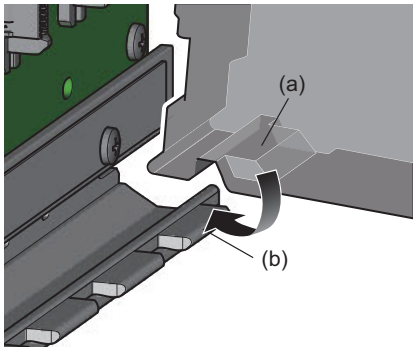

(3) Push in the module until the module fixing hook (c) snaps into place.

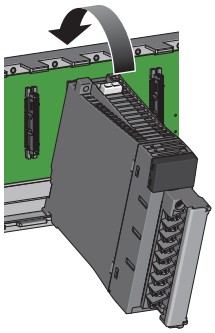

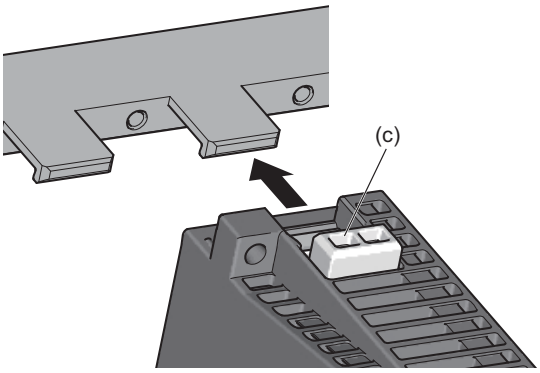

Check that the module fixing hook (c) hangs the base unit and the module is mounted on the base unit securely.

(4) Secure the module to the base unit using screws.

(Note) Be sure to fix all the modules with screws to prevent them from dropping.
The fixing screws (M3 x 12) are to be prepared by user.

[Removal]

(1) Remove the module fixing screws.

(2) Hold the module with both hands, and push the hook (a) on the top of the module with a finger until it stops.

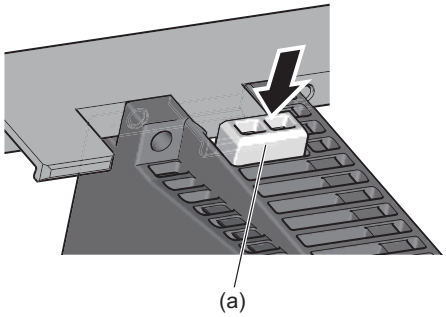

(3) While pushing the hook (a), and using the bottom of the module as a support, pull the module toward you.

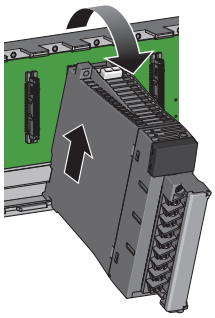

Lift the module upwards and remove the module concave part (b) from the guide (c) of the base module.

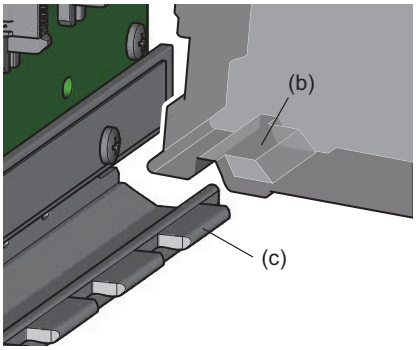

⚠ CAUTION

1. **When module fixing screws are used, remove the screws first and module from the base unit. Failure to do so may damage the module.**
2. **The module surface temperature may be high immediately after power-off. When the module is removed, pay attention to the burn injury.**

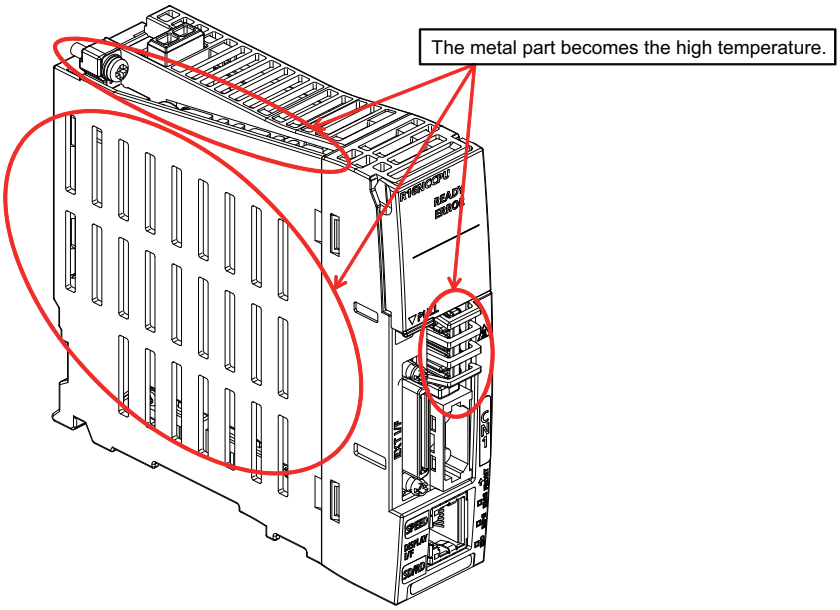

5.1.4 Installation and Removal the Signal Splitter

The signal splitter is only for the installation of the DIN rail.
With the DIN rail, the unit can be installed both laterally and longitudinally.

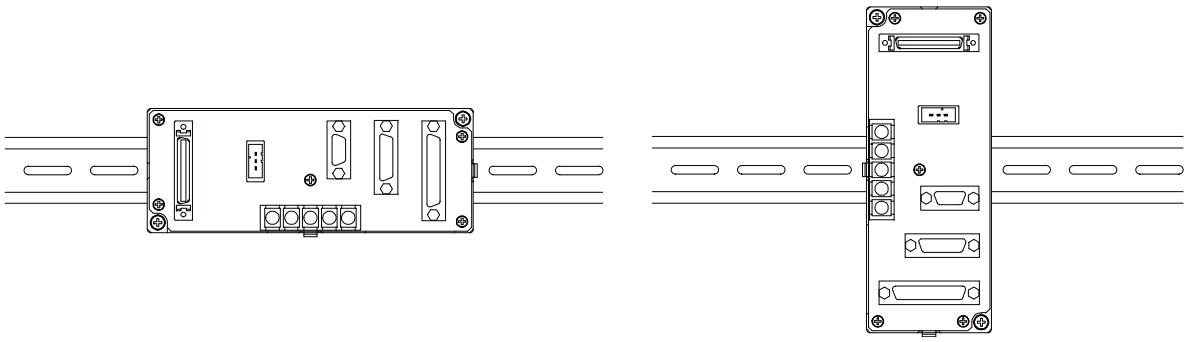

[Installation]

(1) Hook the upper latch of the unit on the DIN rail.
(2) Push the unit into the rail.

[Lateral direction]

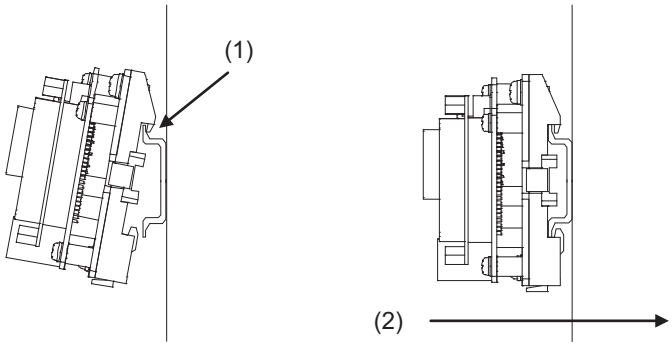

[Longitudinal direction]

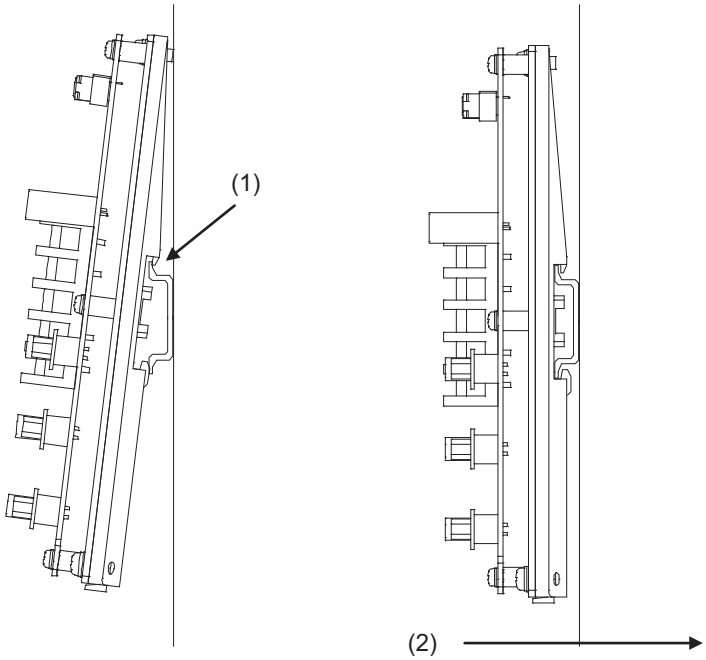

[Removal]

(1) Set down the rail hook.
When setting down the rail hook, use the tool such as a flat-blade screwdriver.

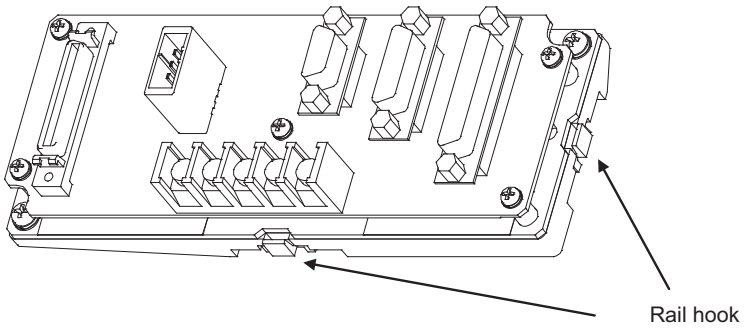

(2) Remove the unit.

[Lateral direction]

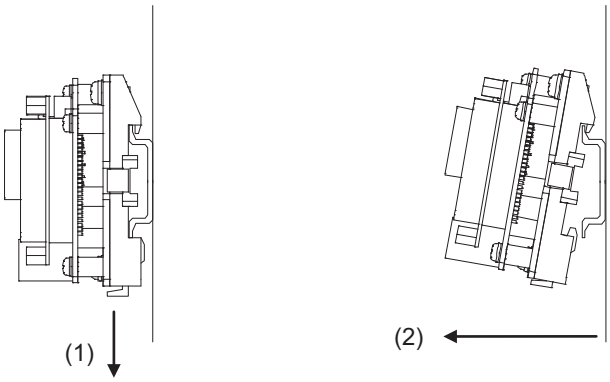

[Longitudinal direction]

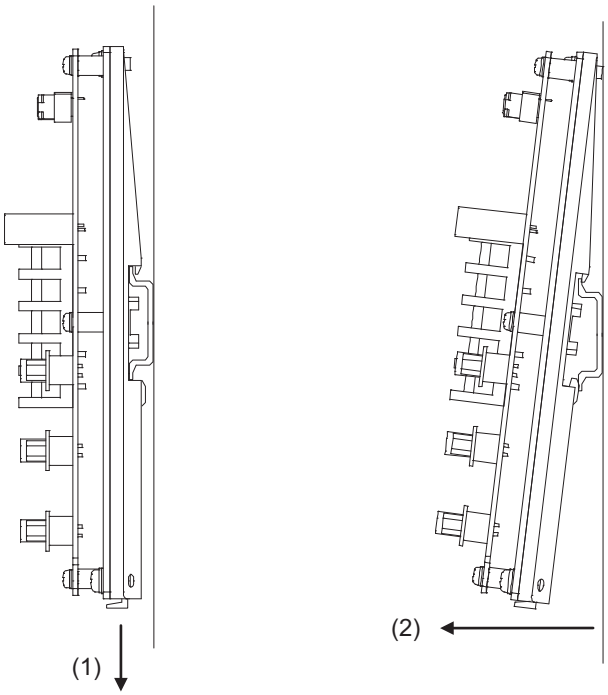

Designate the type below as DIN rail standard
- TH35-7.5Fe:7.5
- TH35-7.5AL:7.5
- TH35-15Fe:15

5.2 Calculating Heat Generation by C80

The ambient temperature inside the control panel storing the C80 must be suppressed to a C80 operating ambient temperature of 55°C (131°F).
For the design of radiation from the storing panel, it is necessary to know the average power consumption (heating value) of the devices and instruments stored in the control panel.
Here, the method of obtaining the average power consumption of C80 is described. From the power consumption, calculate a rise in ambient temperature inside the control panel.

The power consuming parts of C80 are roughly classified into six blocks as shown below. The following shows how to calculate the average power consumption in each block.

(1) Power consumption of the power supply module

The power conversion efficiency of the power module is approx. 70 [%], i.e., 30 [%] of the output power is consumed by heating. As a result, 3/7 of the output power becomes the power consumption.
Therefore, the calculation formula is as follows.

$$W_{pw} = \frac{3}{7} \times (I_{5v} \times 5)\ [W]$$

I_{5V} :Current consumption of logic 5 VDC circuit of each module

(2) Power consumption of a total of 5 VDC logic section of each module (including CPU module)

The power consumption of the 5 VDC output circuit section of the power module is the power consumption of each module. (Including the current consumption of the basic base.)
$W_{5V} = I_{5V} \times 5$ [W]

(3) A total of 24 VDC average power consumption of the output module (power consumption for simultaneous ON points)

The average power of the external 24 VDC power is the total power consumption of each module.
$W_{24V} = I_{24V} \times 24 \times$ ratio of simultaneous ON [W]
I_{24V}: Average current consumption of internal consumption power supply of the output module 24VDC [A]

(4) Average power consumption due to voltage drop in the output section of the output module
(Power consumption for simultaneous ON points)

$W_{OUT} = I_{OUT}$ x Vdrop x Number of output points x Simultaneous ON rate [W]
I_{OUT}: Output current (Current in actual use) [A]
Vdrop : Voltage drop in each output module [V]

(5) Average power consumption of the input section of the input module (Power consumption for simultaneous ON points)

$W_{IN} = I_{IN}$ x E x Number of input points x Simultaneous ON rate [W]
I_{IN}: Input current (Effective value for AC) [A]
E: Input voltage (Voltage in actual use) [V]

(6) Power consumption of the external power supply section of the intelligent function module

$W_S = I_{5V} \times 5 + I_{24V} \times 24 + I_{100V} \times 100$ [W]

The total of the power consumption values calculated in (1) to (6) becomes the C80 overall power consumption.

$W = W_{PW} + W_{5V} + W_{24V} + W_{OUT} + W_{IN} + W_S$ [W]

From this overall power consumption [W], calculate the heating value and a rise in ambient temperature inside the control panel.

The outline of the calculation formula for a rise in ambient temperature inside the control panel is shown below.

$$T = \frac{W}{UA} \ [℃]$$

W : C80 overall power consumption (value obtained above)
A : Surface area inside the control panel[m2]
U : When the ambient temperature inside the control panel is uniformed by a fan.....6
When air inside the control panel is not circulated 4

When a rise in ambient temperature inside the control panel exceeds the specified limit, it is recommended that you install a heat exchanger in the control panel to lower the ambient temperature inside the control panel.

If a normal ventilating fan is used, dust will be sucked into C80 together with the external air. Note that it may affect C80.

(7) Example of average power consumption calculation (R16NCCPU-S1 use)

(a) System configuration

R64P	R04CPU	R16NCCPU-S1	R173SXY	RX40C7	RY40 PT5P	RJ71EN71	R38B

(b) 5VDC/24VDC current consumption of each module

Unit	5VDC current consumption	24VDC current consumption
R04CPU (Note)	0.67[A]	-
R16NCCPU-S1	1.70[A]	-
R173SXY	0.20[A]	0.04[A]
RX40C7 (Note)	0.11[A]	-
RY40PT5P (Note)	0.13[A]	0.02[A]
RJ71EN71 (Note)	0.82[A]	-
R38B (Note)	0.71[A]	-

(Note) 5VDC current consumption of the MELSEC standard module may be changed. It must be always confirmed in the latest manual.

(c) Power consumption of power module

$W_{PW} = 3 / 7 \times (0.67 + 1.70 + 0.20 + 0.11 + 0.13 + 0.82 + 0.71) \times 5 = 9.30$ [W]

(d) Power consumption of a total of 5VDC logic section of each module

$W_{5V} = (0.67 + 1.70 + 0.20 + 0.11 + 0.13 + 0.82 + 0.71) \times 5 = 21.70$ [W]

(e) A total of 24VDC average power consumption of the output module

$W_{24V} = 0.04 \times 24 + 0.02 \times 24 = 1.44$ [W]

(f) Average power consumption due to voltage drop in the output section of the output module

$W_{OUT} = 0.1 \times 0.2 \times 24 \times 1 + 0.5 \times 0.3 \times 16 \times 1 = 2.88$ [W]

(g) Average power consumption of the input section of the input module

$W_{IN} = 0.004 \times 24 \times 40 \times 1 + 0.004 \times 24 \times 16 \times 1 = 5.38$ [W]

(h) Power consumption of the external power supply section of the intelligent function module.

$W_S = 0$ [W]

(i) Power consumption of overall system

$W = 9.30 + 21.70 + 1.44 + 2.88 + 5.38 = 40.70$ [W]

6

Wiring and Connecting

6.1 Precautions

⚠ CAUTION

⚠ Be sure to ground of earth terminal FG and LG (Ground resistance: 100Ω or less). Not doing so could result in electric shock or operation failure.

⚠ When wiring in the unit, be sure that it is done correctly by checking the product's rated voltage and the terminal layout. Connecting a power supply that is different from the rating or incorrectly wiring the product could result in fire or damage.

⚠ External connections shall be crimped or pressure welded with the specified tools, or correctly soldered. Imperfect connections could result in short circuit, fire, or operation failure.

⚠ Tighten the terminal screws within the specified torque range.
If the terminal screws are loose, it could result in short circuit, fire, or operation failure.
Tightening the terminal screws too far may cause damages to the screws and/or the module, resulting in drop, short circuit, or operation failure.

⚠ Be sure there are no foreign matters such as sawdust or wiring debris inside the module.
Such debris could cause fire, damage, or operation failure.

⚠ The module has an ingress prevention label on its top to prevent foreign matter, such as wiring debris, from entering the module during wiring.
Do not remove this label during wiring. Before starting system operation, be sure to remove this label because of heat dissipation.

6.1.1 Precautions for Power Supply Wiring

(a) 100VAC, 200VAC and 24VDC wires should be twisted as dense as possible respectively. Connect the modules with the shortest distance.
Use the wires of the following core size for wiring.

Application	Recommended core size
100VAC, 200VAC, 24VDC wires	0.75 to 2mm^2
I/O equipment	0.3 to 0.75mm^2 (Outer diameter: 2.8mm^2 or less)
Ground wire	2.0mm^2 or more, wire length: 30cm or less

(b) Do not install 100VAC or 24VDC wires together with the main circuit lines (high voltage and large current) or I/O signal wires (including common lines). Keep the cable at least 100 mm away from the line.

(c) A momentary power failure may be detected, or the CPU module or remote head module may be reset because of the lightning surge noise. As a measure against the lightning surge noise, connect a surge absorber for lightning as shown below. Using the surge absorber for lightning can reduce the influence from the lightning.

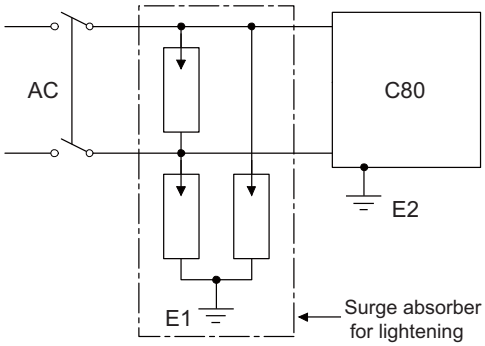

(Note 1) Separate the ground of the surge absorber for thunder (E1) from that of CNC control unit (E2).

(Note 2) Select a surge absorber for thunder whose power supply voltage does not exceed the maximum allowable circuit voltage even if at the time of maximum power supply voltage elevation.

6.1.2 Precautions for Wiring of I/O Equipment

(a) Use UL listed solderless terminals if necessary for UL compliance, and for processing, use a tool recommended by their manufacturer. Note that a solderless terminal with an insulation sleeve cannot be used.

(b) The wires used for connection to the terminal block must be 0.3 to 0.75mm^2 in core and 2.8mm or less in outside diameter.

(c) Wire the input and output lines away from each other.

(d) When the wiring cannot be run away from the main circuit and power lines, use a batch-shielded cable and ground it on the CNC control unit side. However, in some cases, ground it on the opposite side.

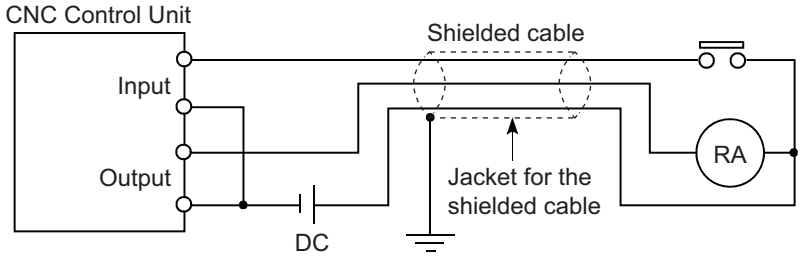

(e) Where wiring runs through piping, ground the piping without fail.

(f) Run the 24VDC input line away from the 100VAC and 200VAC lines.

(g) Wiring of 200m (656.17ft.) or more distance will give rise to leakage currents due to the wiring capacity, resulting in a fault.
Refer to the troubleshooting chapter of the I/O Module User's Manual.

(h) As a countermeasure to power surge due to thunder, separate AC lines from DC lines and connect a surge absorber for thunder (refer to "Wiring and Connecting: Precautions:Power supply wiring").
Without the countermeasures, an I/O device failure could occur due to thunder.

6.1.3 Precautions for Grounding

To ground the cable, follow the steps (a) to (c) shown below.

(a) Use the dedicated grounding as independent as possible.
Ground the FG and LG terminals to the protective ground conductor dedicated to the programmable controller.
(Ground resistance: 100Ω or less)

(b) If independent grounding cannot be provided, employ the Shared grounding shown below.

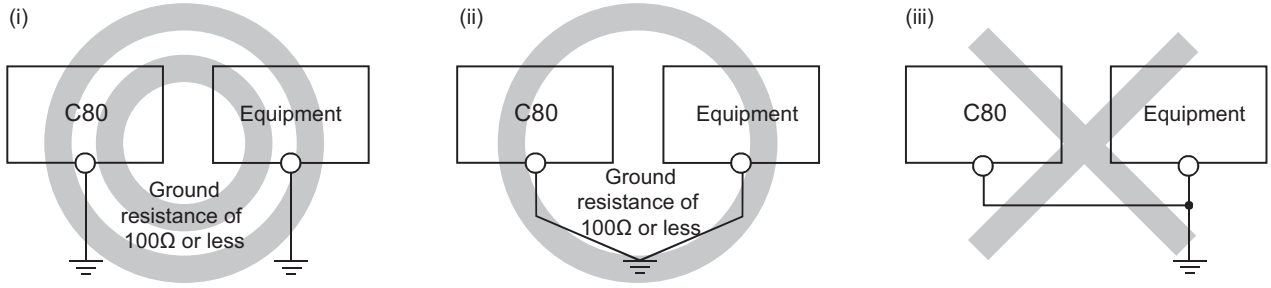

(i) Independent grounding: Recommended
(ii) Shared grounding: Allowed
(iii) Common grounding: Not allowed

(c) Use the thickest cable (maximum of 2mm^2).
Position the ground-contact point as nearly to CNC control unit as possible, and use the total length of the grounding cable as short as possible.

6.1.4 Precautions for Using Optical Communication Cable

An optical communication cable is used for communication between the control unit and the drive unit.
Special precautions, differing from the conventional cable, are required when laying and handling the optical communication cable.

(Note) If the cable you use is not Mitsubishi's, malfunctions resulted from connection problems or aged deterioration are not covered under the warranty.

Optical communication cable outline and parts

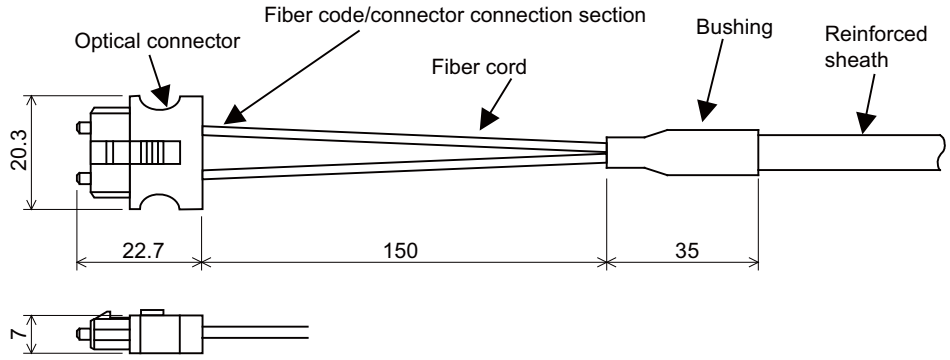

To ensure the system performance and reliability, purchase the optical communication cable from Mitsubishi. A machining drawing is given in "Cable" as reference, but the purchased optical communication cable cannot be cut or connected by the machine tool builder.

Precautions for handling optical communication cable

(1) A protective cap is attached to the optical module and optical communication cable mounted on the PCB when the system is delivered. Leaving this protective cap unattached could result in connection faults from the adherence of dirt and dust. Do not remove the protective cap when not connecting the cable. If dirty, wipe off lightly with a piece of dry gauze, etc. (Do not use solvents such as alcohol as the optical fiber material could melt.)
(2) Hold the connector section when connecting or disconnecting the optical connector. Holding the fiber cord will result in force exceeding the tolerable tension on the fiber cord and connector connection section, and could cause the fiber cord to dislocate from the optical connector thereby inhibiting use.
(3) The optical connector cannot be connected in reversed. Check the connector orientation when connecting the optical communication cable to the optical module. Align the connector lock lever with the lock holes on the PCB's optical module, and press the connector straight in. Confirm that the lock lever connects with the optical module and that a "click" is heard.
(4) When disconnecting the optical communication cable from the PCB, press the lock release buttons on the lock lever, and pull out the cable while holding the connector section. The connector could be damaged if the cable is pulled without pressing down on the lock release buttons.
(5) Do not apply excessive force onto the optical communication cable by stepping on it or dropping tools, etc., on it.

Precautions for laying optical communication cable

(1) Do not apply a force exceeding the cable's tolerable tension. Binding the cables too tight with tie-wraps could result in an increased loss or a disconnection. Use a cushioning material such as a sponge or rubber when bundling the cables and fix so that the cables do not move.

(2) Do not connect the cables with a radius less than the tolerable bending radius. Excessive stress could be applied near the connector connection section and cause the optical characteristics to drop. The cable bending radius should be 10 times or more than the outer diameter at the reinforced sheath, and 20 times or more than the outer diameter at the fiber cord section.

(3) Do not apply torsion to the optical communication cable. Laying a twisted cable could cause the optical characteristics to drop.

(4) When laying the cables in a conduit, avoid applying stress on the fiber cord and connector connection section. Use the tensile end such as a pulling eye or cable grip, etc.

(5) Fix the reinforced sheath with a cable clamp so that the mass of the optical communication cable is not directly applied on the fiber cord and connector connection section.

(6) Never bundle the cables with vinyl tape. The plasticizing material in the vinyl tape could cause the POF cable to break.

(7) Loop the excessive cable with twice or more than the minimum bending radius.

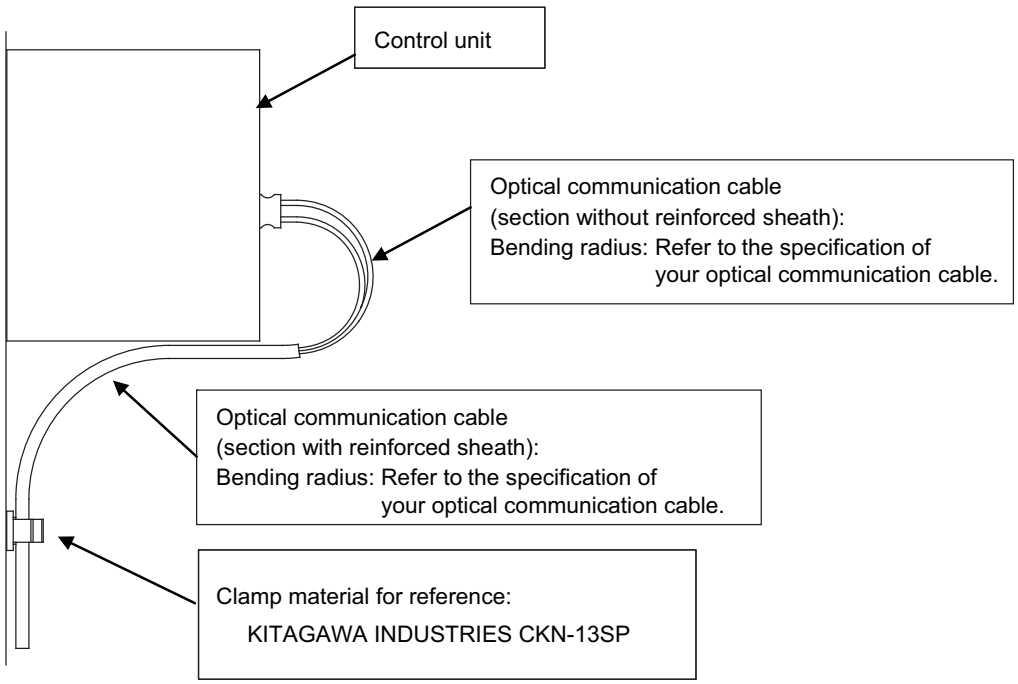

6.2 Wiring to the Power Supply Module

The following diagram shows the wiring example of power lines, grounding lines, etc. to the basic base unit and the extension base unit.
For wiring examples for each power supply module, refer to the manual included with the power supply module.

6.2.1 R61P/R62P/R63P/R64P

[AC power supply]

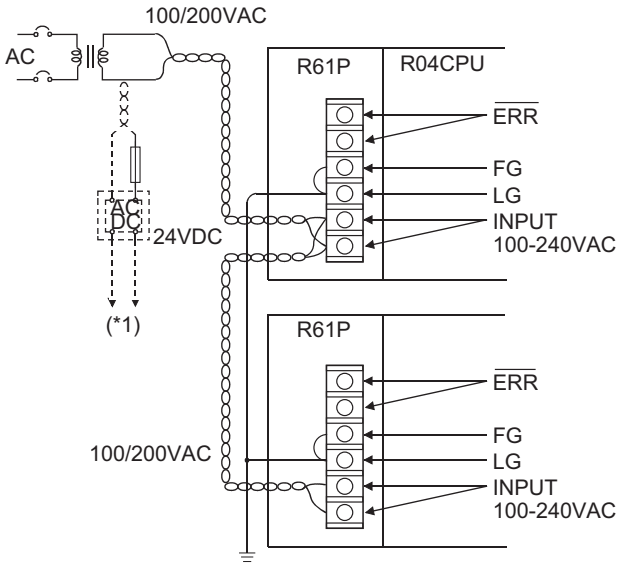

[DC power supply]

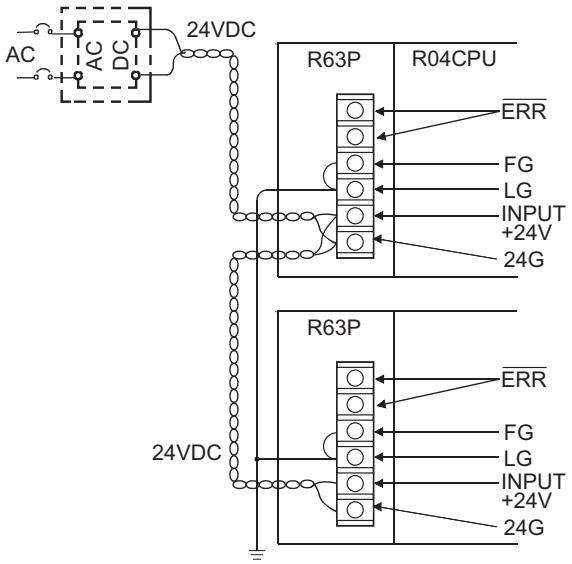

(*1) Connected to the 24VDC terminal of a module that requires a supply of 24VDC inside an I/O module.

(Note 1) Use the possibly thickest (up to 2 mm^2) wires for the 100/200 VAC and 24 VDC power cables. Always use crimp terminals for the terminal block wiring. To prevent a short circuit caused by any loosen screws, use 0.8mm thick crimp terminals with insulation sleeves. Up to 2 terminals can be attached to a terminal area.

(Note 2) Ground the LG and FG terminals after short-circuiting them. If LG (PE) terminals and FG terminals are connected without grounding the wires, the modules may be susceptible to noise. In addition, since the LG terminals have potential of 1/2 input voltage, the operator may receive an electric shock when touching metal parts.

6.2.2 Q61P/Q63P/Q64PN

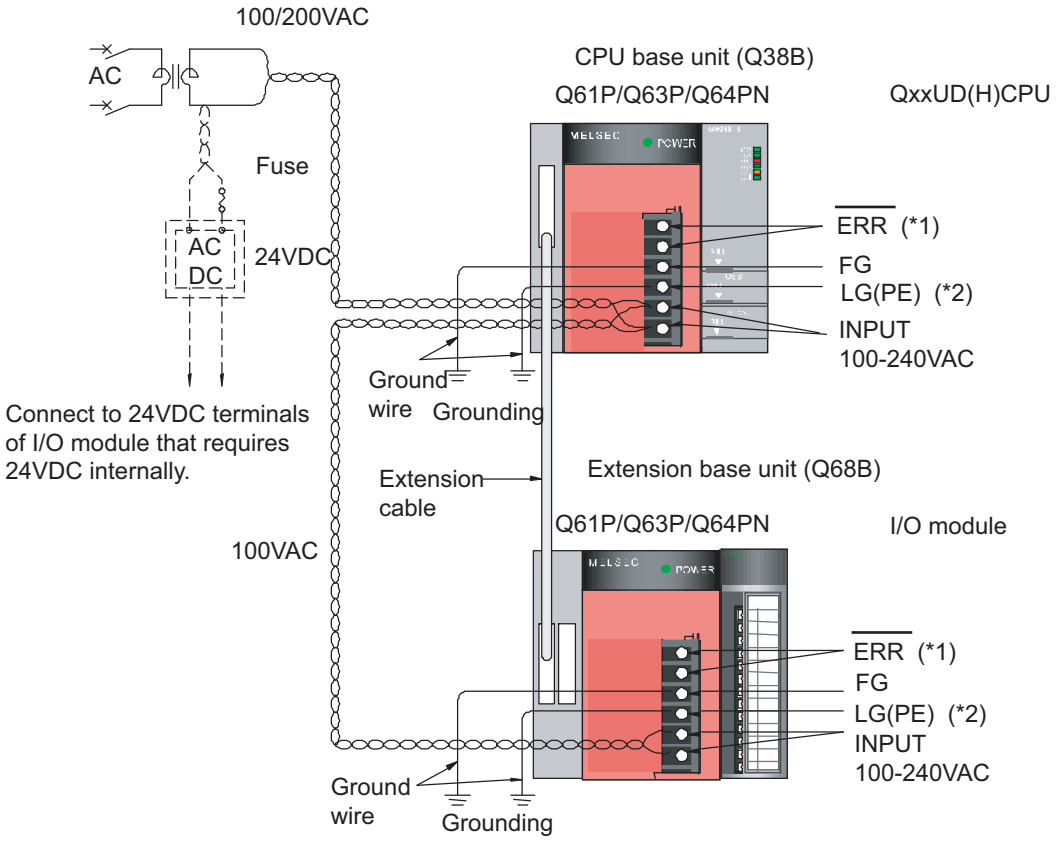

(*1) The ERR terminal turns ON/OFF as described below.
<When the power supply module is mounted on the main base unit>
The terminal turns OFF (opens) when the AC power is not input, a CPU module stop error (including a reset) occurs, or the fuse of the power supply module is blown.
<When the power supply module is mounted on the extension base unit>
The terminal is always OFF (open).

(*2) Be sure to ground the LG terminal of Q64PN, which are used as protective earth (PE).

(Note 1) Use the possibly thickest (up to 2 mm^2) wires for the 100/200 VAC and 24 VDC power cables. Always use crimp terminals for the terminal block wiring. To prevent a short circuit caused by any loosen screws, use 0.8mm thick crimp terminals with insulation sleeves. Up to 2 terminals can be attached to a terminal area.

(Note 2) Be sure to ground the earth terminal LG(PE) and FG (Ground resistance: 100Ω or less). If LG (PE) terminals and FG terminals are connected without grounding the wires, the modules may be susceptible to noise. In addition, since the LG terminals have potential of 1/2 input voltage, the operator may receive an electric shock when touching metal parts.

(Note 3) No system error can be detected by the ERR terminal of an extension base unit. (ERR terminal is always set off.)

6.3 Connecting the Emergency Stop Signal

Connect the emergency stop signal to the connector EMG.
An external power supply is required, because R16NCCPU-S1 module does not have 24VDC output for the emergency stop signal.

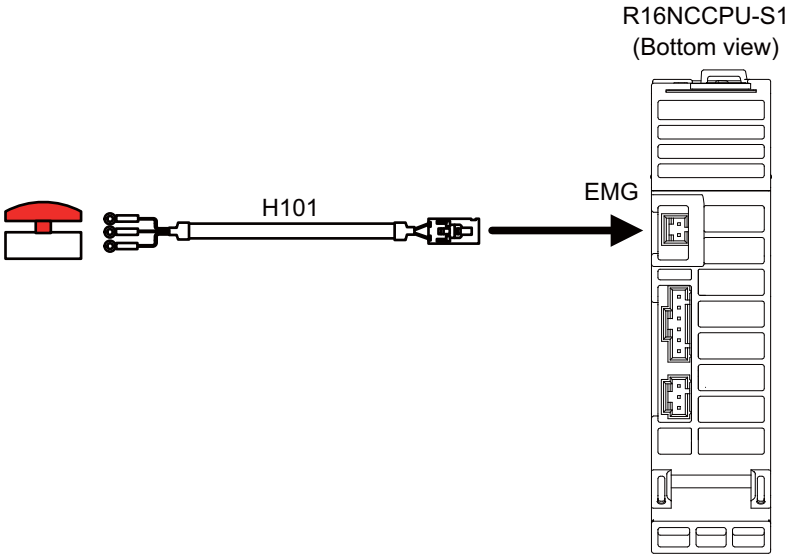

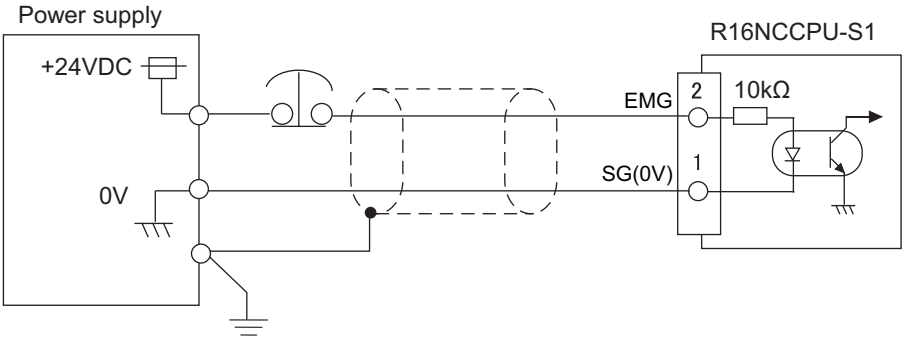

Related items: Drawing for cable connection: "Cable: H101 Cable"

6.4 Connecting the GOT

Connect the display module of GOT2000 series to the DISPLAY I/F connector of the CNC CPU unit using a LAN cable.
Refer to the following manuals for the details on the connection:
"GOT2000 Series Connection Manual (Mitsubishi Products)" SH(NA)-081197ENG-O(1605)MEE
"GOT2000 Series User's Manual (Hardware)" SH(NA)-081194ENG-O(1605)MEE

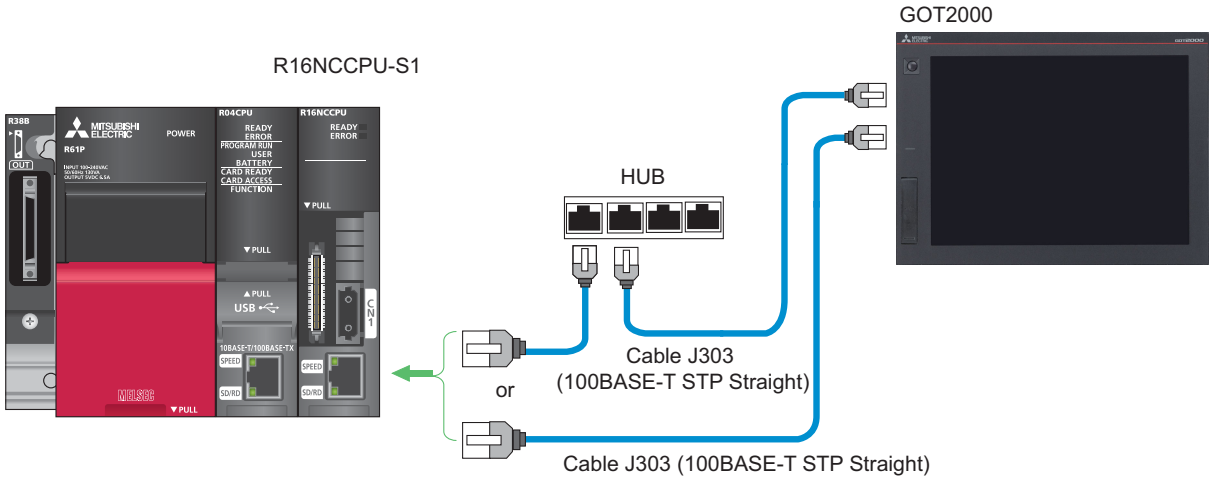

Use the cable, connector and hub that comply the IEEE802.3 100BASE-TX standard.
Shielded twisted pair cable (STP) is necessary to run a LAN cable out of the control panel. Install a ferrite core (TDK product, ZCAT3035-1330) around the cable. (Refer to "EMC Installation Guideline: EMC Countermeasure Parts: Ferrite Core Installation Method" to see how to install the ferrite core.)
Be sure to separate the LAN cable from the drive line, because LAN cables are easily affected by noise.

6.5 Connecting the Drive Unit

Connect an optical communication cable to the connector CN1 for the connection of the drive units: MDS-E/EH Series, MDS-EJ/EJH Series, and MDS-EM/EMH Series.
Refer to the following manuals for the details on the servo drive units (basic wiring and so on).

- Specification Manual MDS-E/EH Series (IB-1501226(ENG))
- Instruction Manual MDS-E/EH Series (IB-1501229(ENG))
- Specification Manual MDS-EJ/EJH Series (IB-1501232(ENG))
- Instruction Manual MDS-EJ/EJH Series (IB-1501235(ENG))
- Specification Manual MDS-EM/EMH Series (IB-1501238(ENG))
- Instruction Manual MDS-EM/EMH Series (IB-1501241(ENG))

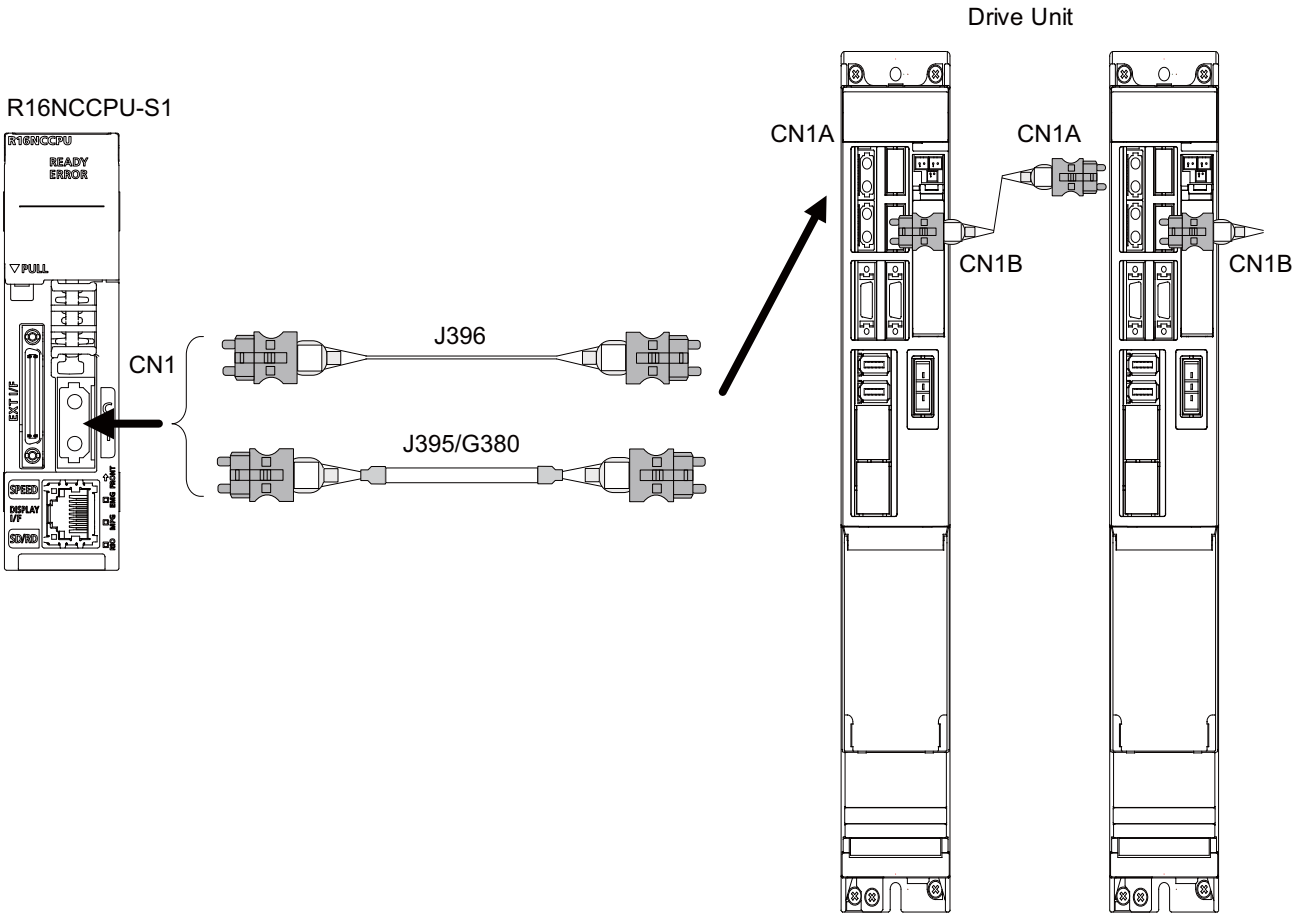

<Related items>
Drawing for cable connection: "Cable: J395 Cable, J396 Cable, G380 Cable"

6.6 Connecting the Dual Signal Module

Connect a relay cable to the connector RIO for the connection of the dual signal module.
Use the connector RIO1 on the dual signal module.
When several dual signal modules (maximum 3 modules) are mounted, use the connector RIO2 to connect to RIO1 on the next dual signal module.
Station No. setting is necessary to connect several dual signal modules.

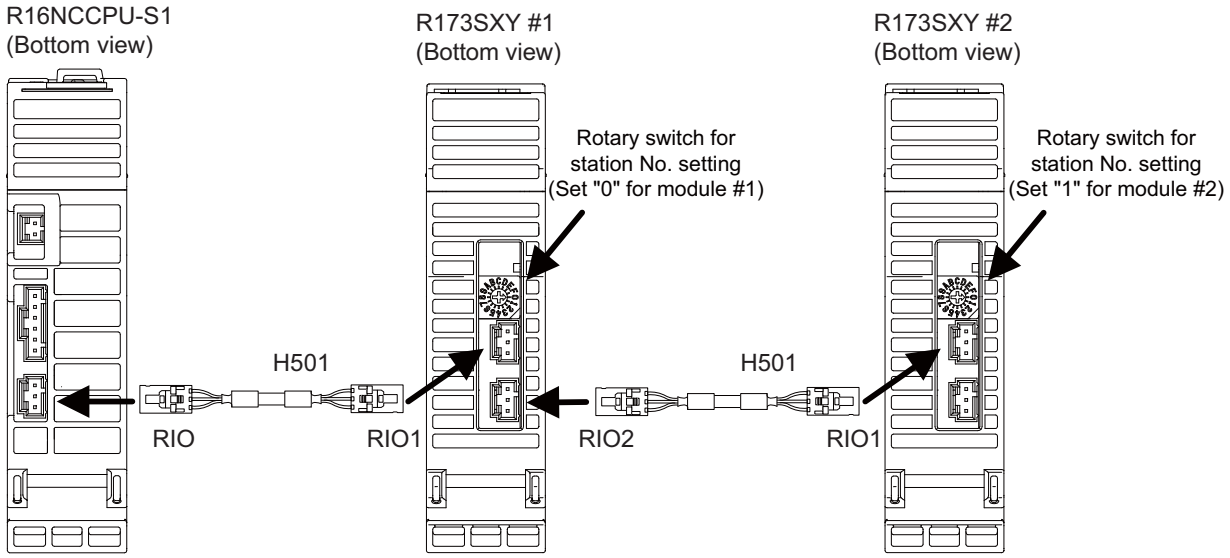

<Related items>
Drawing for cable connection: "Cable: H501 Cable"

(Note) A communication failure will occur when a wrong station No. has been set for the dual signal module. ("0" is set as default.)

Switch name	Function	Setting
CS 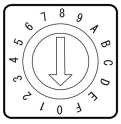	Station No. setting	Available to mount up to 3 modules. Set within the range of 0 to 2. Module #1 -> Set "0" Module #2 -> Set "1" Module #3 -> Set "2"

6.7 Connecting the Signal Splitter

Connect a relay cable to the connecter EXT I/F for the connection of the signal splitter (FCU7-HN387).
Skip (sensor) signals (refer to "Wiring and Connecting: Connecting the Skip Signal (Sensor)") and the signals from manual pulse generator(s) (refer to "Wiring and Connecting: Connecting the Manual Pulse Generator") can be connected to the signal splitter.
Install the signal splitter on a DIN rail.

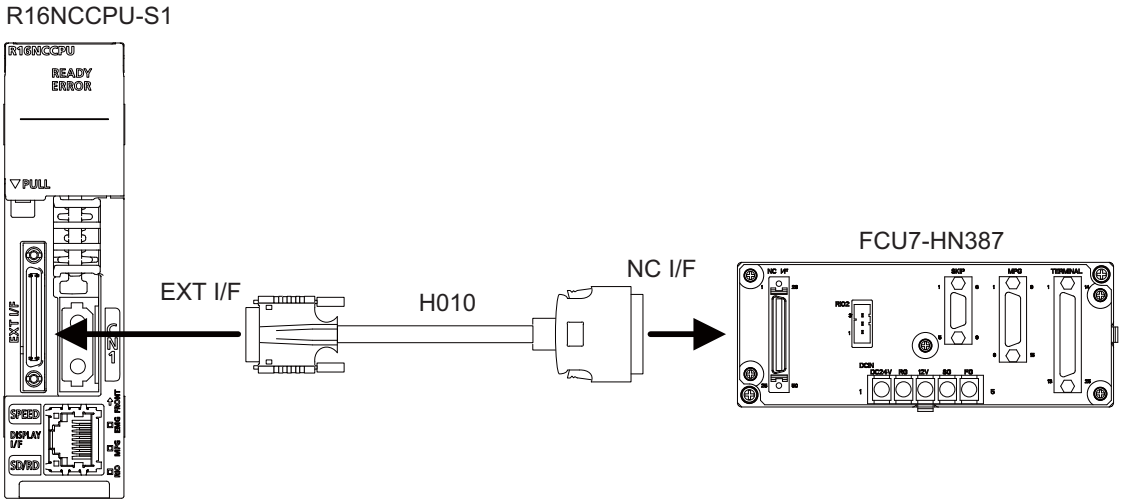

(Note) Neither the connector RIO nor TERMINAL of the signal splitter is currently available.

<Related items>

Drawing for cable connection: "Cable: H010 Cable"

6.8 Connecting the Skip Signal (Sensor)

Connect the skip signals to the connector EXT I/F on CNC CPU module, or the connector SKIP on signal splitter.
H300 cable is used as composite cable with manual pulse generators. Use a terminal block for the relay connection.
Skip signals are used for processing the high-speed signals. Shielding is necessary for the cable that connects the terminal block and the sensor.
H310 cable is applied when the signal splitter (FCU7-HN387) is used.

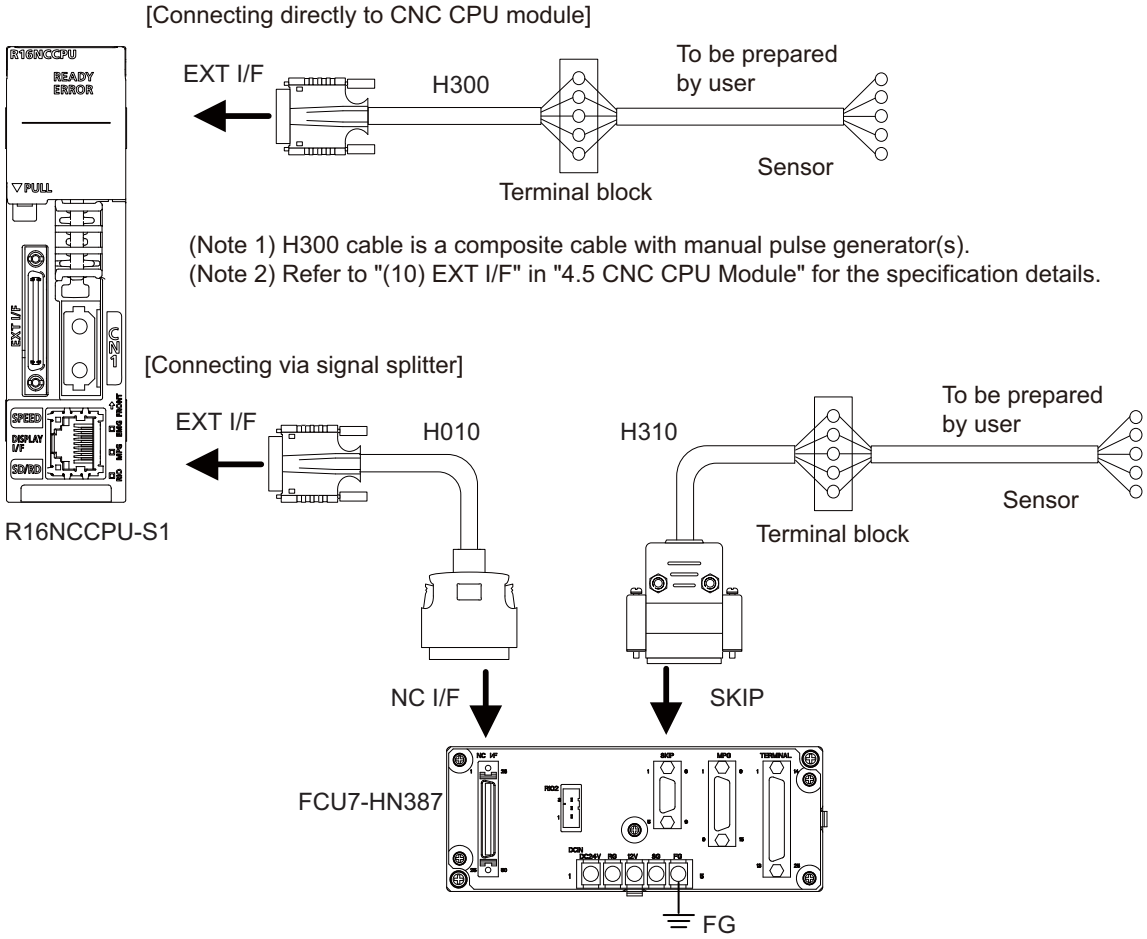

(Note 1) H300 cable is a composite cable with manual pulse generator(s).
(Note 2) Refer to "(10) EXT I/F" in "4.5 CNC CPU Module" for the specification details.

(Note 1) Be sure to connect the terminal block FG of the signal splitter to the ground (FG).
(Note 2) Refer to "(4) SKIP" in "4.7 Signal Splitter" for the specification details.

<Related items>
Drawing for cable connection: "Cable: H300 Cable, H310 Cable"

6.9 Connecting the Manual Pulse Generator

Connect the signals of manual pulse generator(s) to any of the following connectors.
- Connector MPG or EXT I/F on CNC CPU module
- Connector MPG on signal splitter (FCU7-HN387)

All of the connectors above allow the connection of 5V power supply type manual pulse generator (UFO-01-2Z9).
The connector MPG on signal splitter allows the connection of 12V power supply type manual pulse generator (HD60C) as well.
(Note) Set the parameter shown below to suit the manual pulse generator used.
- 5V manual pulse generator (UFO-01-2Z9): #1240 set12/bit0 = 1 (100 pulse/rev)
- 12V manual pulse generator (HD60C): #1240 set12/bit0 = 0 (25 pulse/rev)

(1) Connecting directly to CNC CPU module

Connect signals from manual pulse generator(s) to the connector MPG.
The connector EXT I/F is applied when the channel 2 and 3 are used.
5V power supply type is available as of manual pulse generator.

When connecting a 5V manual pulse generator

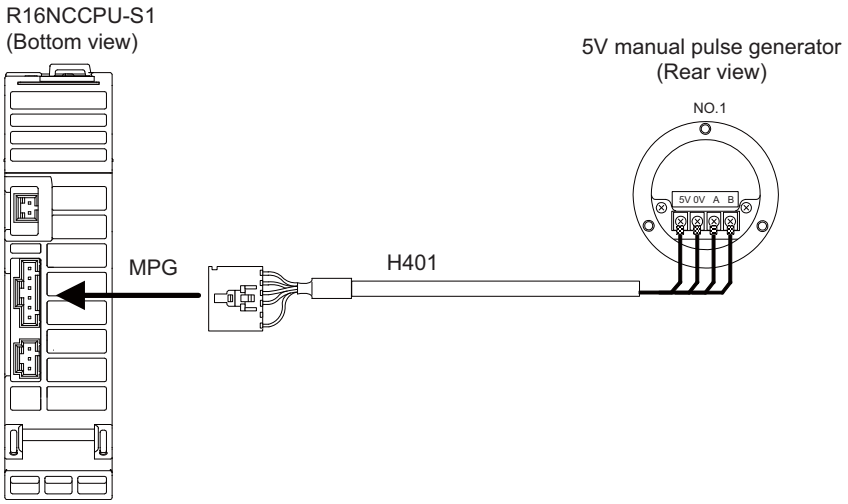

When connecting two 5V manual pulse generators

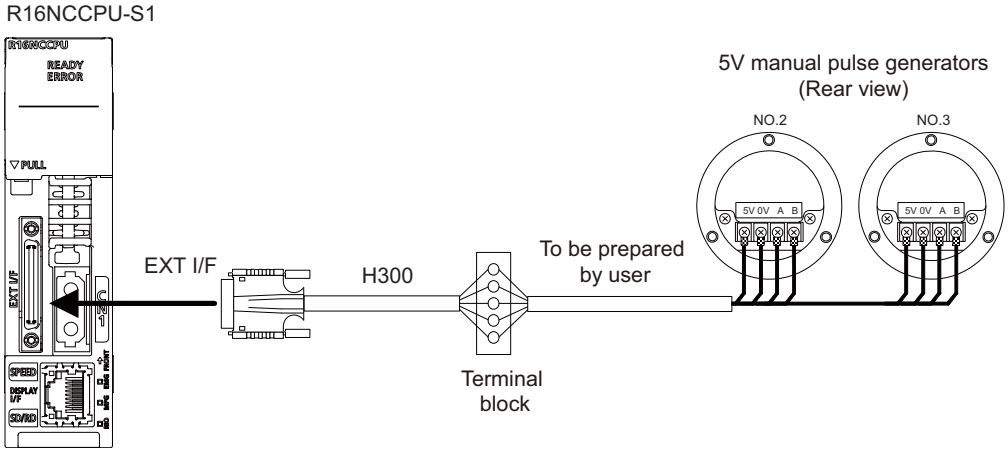

(Note) Channel 2 and 3 are uned in this wiring example. H300 cable is a composite cable with skip signal.

<Related items>

Drawing for cable connection: "Cable: H401 Cable, H300 Cable"

(Note 1) When selecting a manual pulse generator, make sure that its case and 0V terminal are insulated.
(Note 2) When connecting cables using a terminal block, etc., never fail to observe the followings.

- The total length of the cables from the connector on C80's side to the terminal area of manual pulse generators has to be within the maximum cable length (20m).
- Have the cable shield single-point-grounded on C80's side, and cover the cable with the shield up to near the manual pulse generators. (It is required to relay the shield also.)
- For relay cables, use wire material of cross section equivalent to UL1061-2464 AWG26 x 2P or above.

(2) Connecting via signal splitter

Both 5V power supply type and 12V power supply type manual pulse generator can be connected to the signal splitter. 12V power supply type requires extra 12V power supply.

When connecting two 5V manual pulse generators

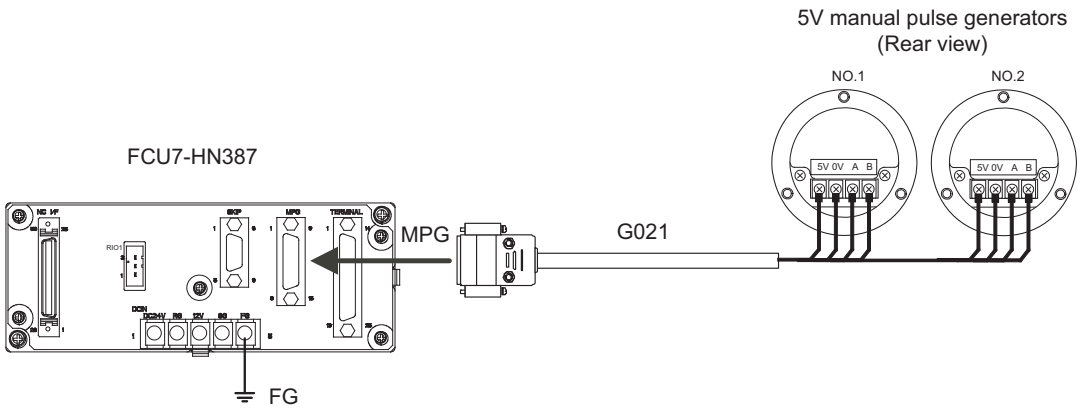

(Note) Be sure to connect the terminal block FG of the signal splitter to the ground (FG).

When connecting two 12V manual pulse generators

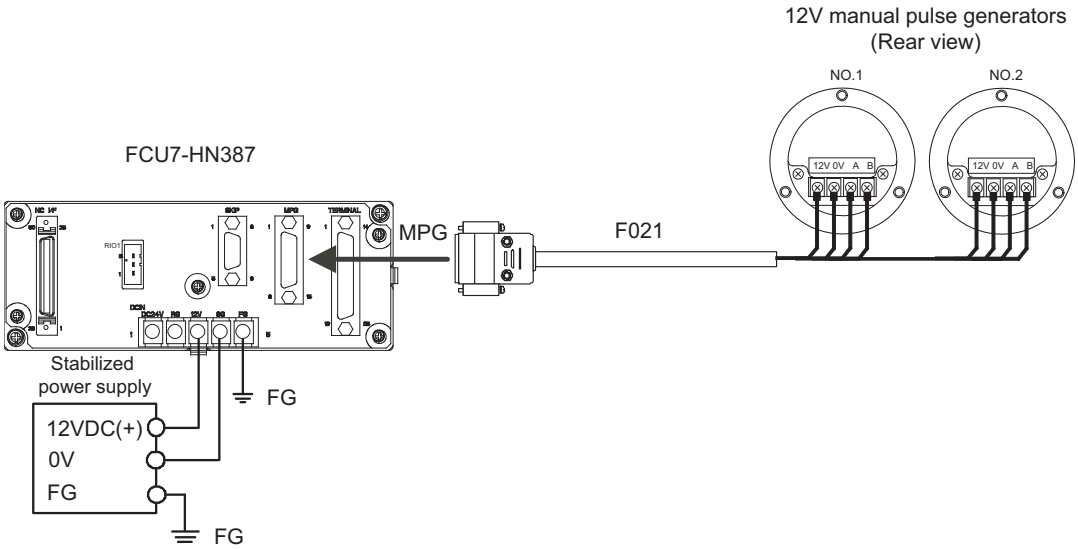

(Note) Be sure to connect the terminal block FG of the signal splitter to the ground (FG). Connect a 12VDC power supply between the 12V terminal block and FG.

<Related items>

Drawing for cable connection: "Cable: F020/F021/F022 Cable, G020/G021/G022 Cable"

Cables for the connection of manual pulse generators to signal splitter

Power supply type	1ch	2ch	3ch
5V power supply type	G020		
	G021	G021	
	G022	G022	G022
12V power supply type	F020		
	F021	F021	
	F022	F022	F022

(Note 1) When selecting a manual pulse generator, make sure that its case and 0V terminal are insulated.

(Note 2) 24VDC supply is not required for the terminal block of signal splitter. 12VDC supply is required for the 12V power supply type manual pulse generator only.

7

Cable

7.1 Symbols for Writing Cable Drawings

(1) 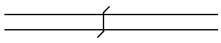 indicates twisted pair.

(2)  indicates the shield sheath.

(3) 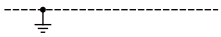 indicates shield clamping to the grounding plate.

(4) In the cable drawings, the partner of the twisted pair cable is given a priority, so please be aware that the pin No. of the connectors at both ends are not necessarily in sequential order.

(5) Equivalent parts can be used for the connector, contact and wire material.

(6) The tolerances of the cables provided by MITSUBISHI are as follows:

Cable length (mm)	Tolerances (mm)
～ 600	±30
601 ～ 1000	±50
1001 ～ 5000	±100
5001 ～ 10000	±150
10001 ～ 15000	±200
15001 ～ 20000	±300

7.2 Cables for CNC CPU

7.2.1 F020/F021/F022 Cable

Max. length: 45m

Application: Manual Pulse Generator (12VDC spec)

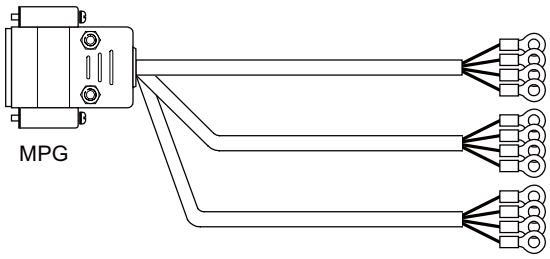

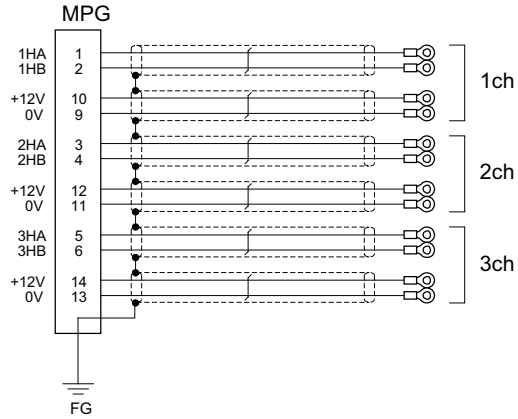

[MPG]
Connector: CDA-15P
Contact: CD-PC-111 x 12
Case: HDA-CTH
Manufacturer: Hirose Electric

Wire material: B-22(19)U x 2SJ-1 x 9
Manufacturer: Sumitomo Electric Industries

[1ch][2ch][3ch]
Crimp terminal: V1.25-3 x 12
Manufacturer: JST

Cable name	1ch	2ch	3ch
F020 cable	○		
F021 cable	○	○	
F022 cable	○	○	○
○ : Usable channel			

(Note) Fold the cable shield over the sheath, and wrap copper foil tape over it.
Connect the wound copper foil tape to GND plate of the connector.

7.2.2 G020/G021/G022 Cable

Max. length: 15m

Application: Manual Pulse Generator (5VDC spec)

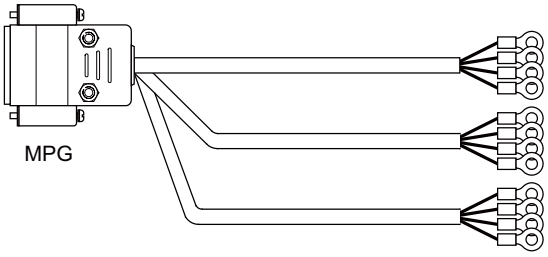

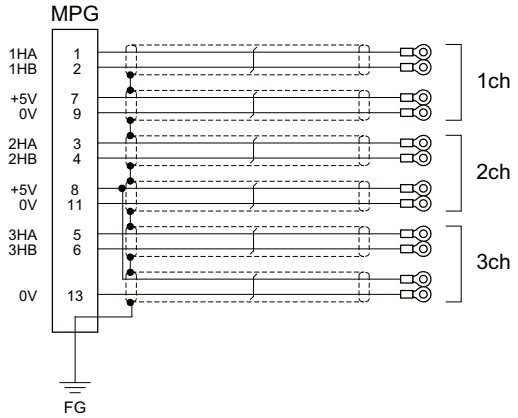

[MPG]
Connector: CDA-15P
Contact: CD-PC-111 x 11
Case: HDA-CTH
Manufacturer: Hirose Electric

Wire material: B-22(19)U x 2SJ-1 x 9
Manufacturer: Sumitomo Electric Industries

[1ch][2ch][3ch]
Crimp terminal: V1.25-3 x 12
Manufacturer: JST

Cable name	1ch	2ch	3ch
G020 cable	○		
G021 cable	○	○	
G022 cable	○	○	○
○ : Usable channel			

(Note) Fold the cable shield over the sheath, and wrap copper foil tape over it.
Connect the wound copper foil tape to GND plate of the connector.

7.2.3 H010 Cable

Max. length: 5m

Application: For signal splitter connection

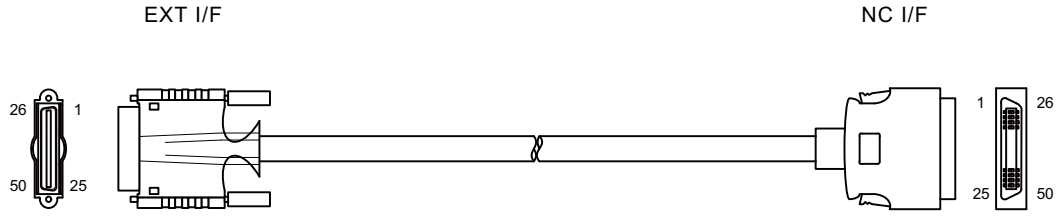

EXT I/F			NC I/F	
5V	1		1	5V
5V	26		26	5V
5V	2		2	5V
5V	27		27	5V
SG	3		3	SG
SG	28		28	SG
AB	4		4	AB
SG	29		29	SG
TXDH	5		5	TXDH
TXDL	30		30	TXDL
RXDH	6		6	RXDH
RXDL	31		31	RXDL
DTRH	7		7	DTRH
DTRL	32		32	DTRL
DSRH	8		8	DSRH
DSRL	33		33	DSRL
TBEMG1	9		9	TBEMG1
TBEMG2	34		34	TBEMG2
DEAD1	10		10	DEAD1
DEAD2	35		35	DEAD2
TBENA1	11		11	TBENA1
TBENA2	36		36	TBENA2
SG	12		12	SG
SG	37		37	SG
EMGIN1	13		13	EMGIN1
EMGIN2	38		38	EMGIN2
EMGOUT1	14		14	EMGOUT1
EMGOUT2	39		39	EMGOUT2
SG	15		15	SG
SG	40		40	SG
TXRXH	16		16	TXRXH
TXRXL	41		41	TXRXL
SG	17		17	SG
SG	42		42	SG
HA3	18		18	HA3
HB3	43		43	HB3
HA2	19		19	HA2
HB2	44		44	HB2
HA1	20		20	HA1
HB1	45		45	HB1
NC	21		21	NC
NC	46		46	NC
NC	22		22	NC
NC	47		47	NC
SKIPCOM	23		23	SKIPCOM
SKIPCOM	48		48	SKIPCOM
SKIP1	24		24	SKIP1
SKIP2	49		49	SKIP2
SKIP3	25		25	SKIP3
SKIP4	50		50	SKIP4
(SHIELD)				(SHIELD)

[EXT I/F]
Connector: HDR-E50MSG1+
Case: HDR-E50LPH
Manufacturer: HONDA TSUSHIN KOGYO CO., LTD

Wire material: UL20276-SB(MA) 25PX28AWG
Manufacturer: Hitachi Cable, Ltd.

[NC I/F]
Connector: 10150-6000EL
Case: 10350-3210-000
Manufacturer: 3M

(Note) Fold the cable shield over the sheath, and wrap copper foil tape over it.
Connect the wound copper foil tape to shield plate of the connector.

7.2.4 H101 Cable

Max. length: 20m

Application: Emergency stop signal

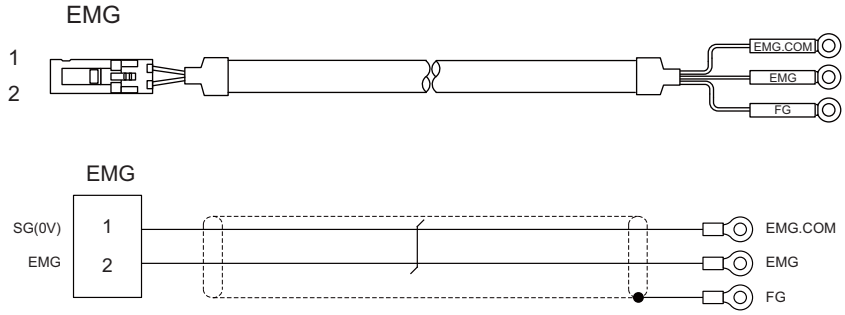

[EMG]
Connector: 50-57-9402
Contact: 16-02-0103
Manufacturer: MOLEX

Wire material: 2464C BIOS-CL3-22 01P
Manufacturer: Bando Electric Wire

Crimp terminal: R1.25-3.5
Manufacturer: JST

(Note) Connect the cable shield to the FG terminal.

7.2.5 H300 Cable

Max. length: 20m

Application: SKIP/manual pulse generator

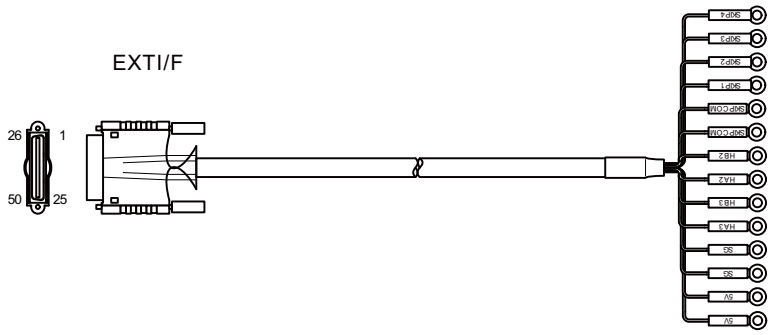

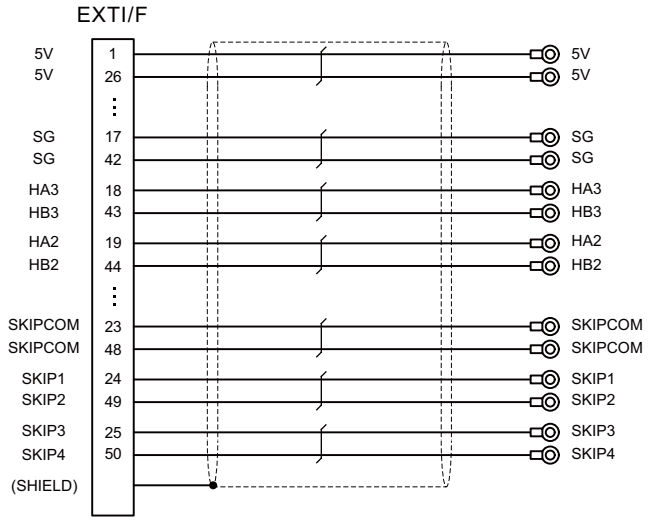

[EXT I/F]
Connector: HDR-E50MSG1+
Case: HDR-E50LPH
Manufacturer: HONDA TSUSHIN KOGYO CO., LTD

Wire material: UL1061-2464 AWG26×7P
Manufacturer: Oki Electric Cable

Crimp terminal: R1.25-3.5
Manufacturer: JST

(Note) Fold the cable shield over the sheath, and wrap copper foil tape over it.
Connect the wound copper foil tape to shield plate of the connector.

7.2.6 H310 Cable

Max. length: 15m
Application: SKIP for Signal splitter

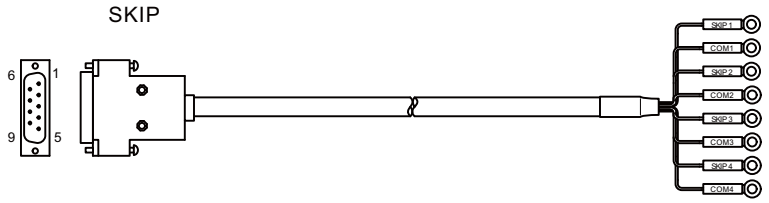

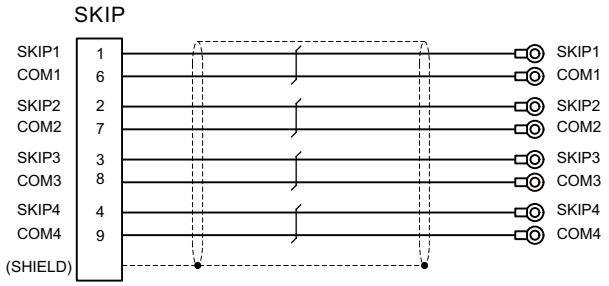

[SKIP]
Connector: CDE-9PF
Contact: CD-PC-121
Case: HDE-CTH
Manufacturer: Hirose Electric

Wire material: UL1061-2464 AWG26×4P
Manufacturer: Oki Electric Cable

Crimp terminal: R1.25-3.5
Manufacturer: JST

(Note) Fold the cable shield over the sheath, and wrap copper foil tape over it.
Connect the wound copper foil tape to shield plate of the connector.

7.2.7 H401 Cable

Max. length: 20m

Application: Manual Pulse Generator (5VDC spec)

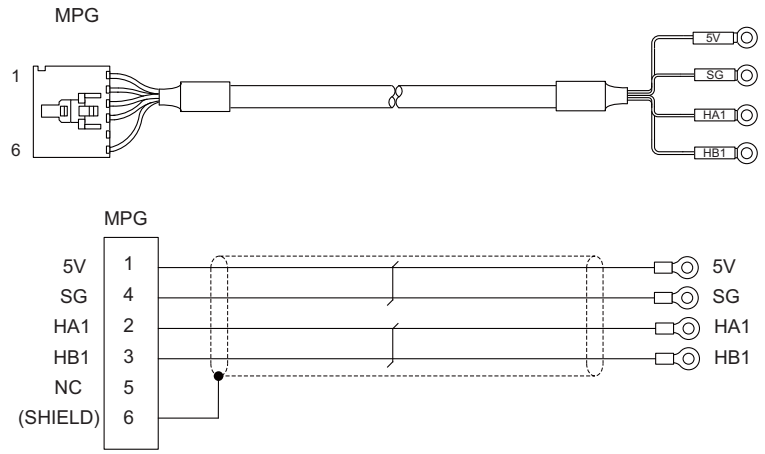

[MPG]
Connector: 50-57-9406
Contact: 16-02-0103
Manufacturer: MOLEX

Wire material: 2464VSV2 x 22A
Manufacturer: Bando Electric Wire

Crimp terminal: R1.25-3.5
Manufacturer: JST

(Note) Connect the cable shield to the connector pin No.6.

7.2.8 H501 Cable

Max. length: 0.5m

Application: For dual-signal module communication

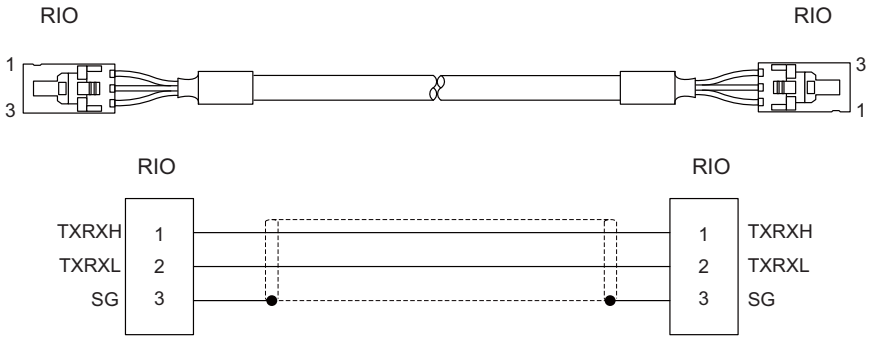

[RIO]
Connector: 50-57-9403
Contact: 16-02-0097
Manufacturer: MOLEX

Wire material: 2464 VSV 2×AWG24
Manufacturer: Bando Electric Wire

[RIO]
Connector: 50-57-9403
Contact: 16-02-0097
Manufacturer: MOLEX

(Note) Connect the cable shield to the connector pin No.3.

7.2.9 J303 Cable

Max. cable length: 20m

Application: Display module communication (Straight)

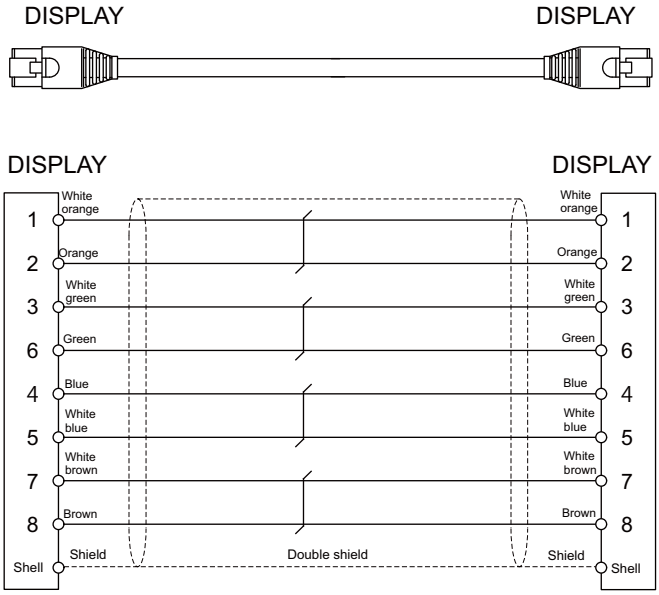

[DISPLAY]
Connector : J00026A0165
Boot : B00080F0090
Manufacturer:
JAPAN Telegärtner

Wire material :
FANC-IEF-SB 24AWG × 4P
Manufacturer:
Kuramo Electric

7.3 Cable Relating to Drive Unit

7.3.1 Cable Wire and Assembly

(1) Cable wire

The specifications of the wire used for each cable, and the machining methods are shown in this section. Mitsubishi uses the cables shown in the tables below. When manufacturing the encoder cable and battery connection cable, use the wires shown below or equivalent products.

(a) Heat resistant specifications cable

Wire type (other manufacturer's product)	Finish outer diameter	Sheath material	No. of pairs	Wire characteristics					
				Configuration	Conductive resistor	Withstand voltage	Insulation resistance	Heat resistance temperature	Flexibility
BD20288 Compound 6-pair shielded cable Specification No. Bangishi-17145 (Note 1)	8.7mm	Heat resistant PVC	2 (0.5mm^2)	100 strands/ 0.08mm	40.7Ω/km or less	500VAC/ 1min	1000MΩ/km or more	105°C	70 × 10^4 times or more at R200
			4 (0.2mm^2)	40 strands/ 0.08mm	103Ω/km or less				

(b) General-purpose heat resistant specifications cable

Wire type (other manufacturer's product)	Finish outer diameter	Sheath material	No. of pairs	Wire characteristics					
				Configuration	Conductive resistor	Withstand voltage	Insulation resistance	Heat resistance temperature	Flexibility
BD20032 Compound 6-pair shielded cable Specification No. Bangishi-16903 Revision No. 3 (Note 1)	8.7mm	PVC	2 (0.5mm^2)	100 strands/ 0.08mm	40.7Ω/km or less	500VAC/ 1min	1000MΩ/ km or more	60°C	100 × 10^4 times or more at R200
			4 (0.2mm^2)	40 strands/ 0.08mm	103Ω/km or less				

(Note 1) Bando Electric Wire (http://www.bew.co.jp/)

(Note 2) The Mitsubishi standard cable is the (a) Heat resistant specifications cable. When the working environment temperature is low and so higher flexibility is required, use the (b) General-purpose heat resistant specifications cable.

Compound 6-pair cable structure drawing

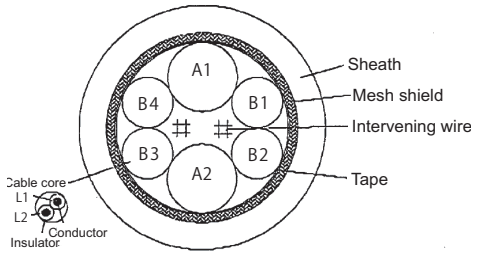

Core identification

Pair No.	Insulator color	
	L1	L2
A1 (0.5mm^2)	Red	White
A2 (0.5mm^2)	Black	White
B1 (0.2mm^2)	Brown	Orange
B2 (0.2mm^2)	Blue	Green
B3 (0.2mm^2)	Purple	White
B4 (0.2mm^2)	Yellow	White

(2) Cable assembly

Assemble the cable with the cable shield wire securely connected to the ground plate of the connector.

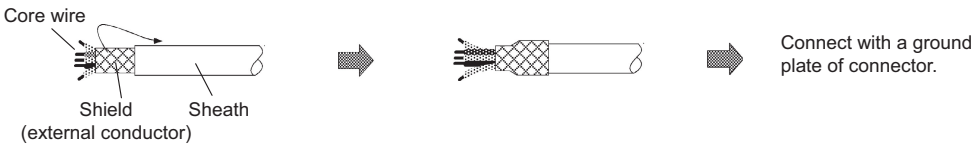

7.3.2 CNP2E-1 Cable

Max. cable length: 30m

Application: Motor side PLG cable

Spindle side accuracy encoder

TS5690 cable

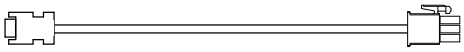

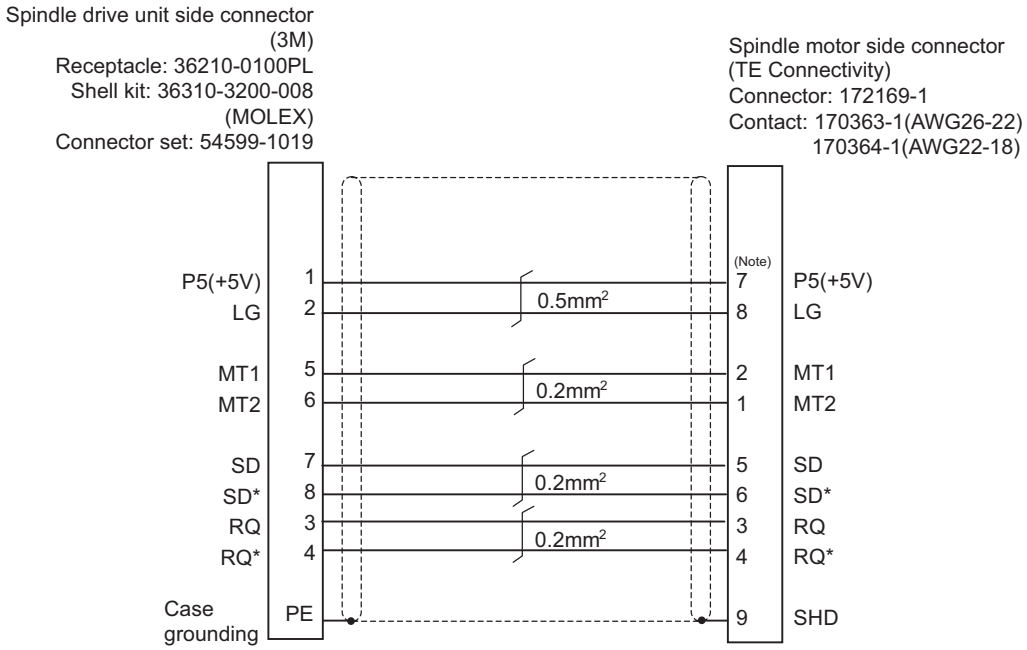

(Note) For the pin "7" or "8", use the contact "170364-1".
For the other pins, use the contact "170363-1".

<Cable connection diagram (for 15m or less)>

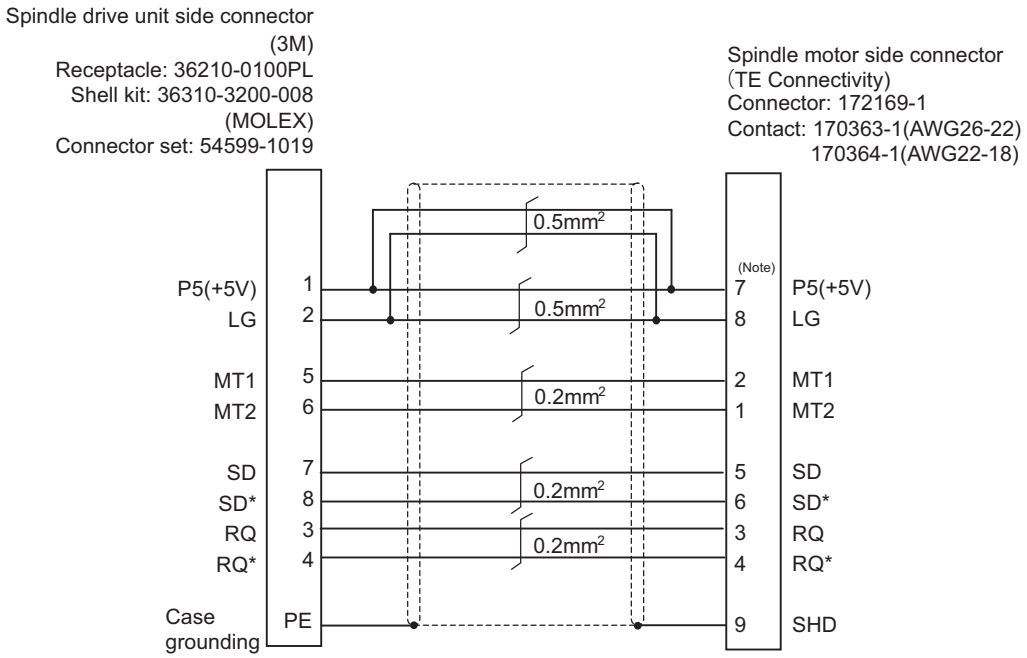

(Note) For the pin "7" or "8", use the contact "170364-1".
For the other pins, use the contact "170363-1".

<Cable connection diagram (for 15m to 30m)>

7.3.3 CNP3EZ-2P/CNP3EZ-3P Cable

Max. cable length: 30m

Application: Spindle side encoder cable

OSE-1024 cable

CNP3EZ-2P (Straight)

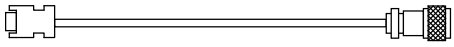

CNP3EZ-3P (Angle)

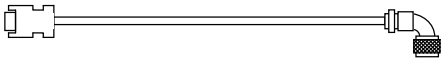

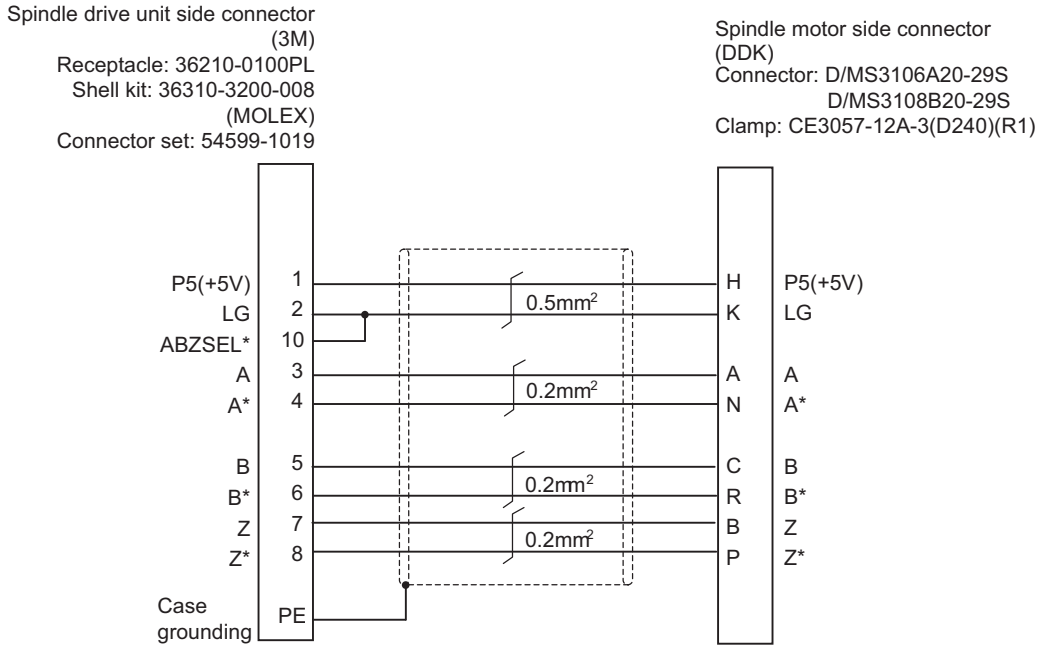

<Cable connection diagram (for 15m or less)>

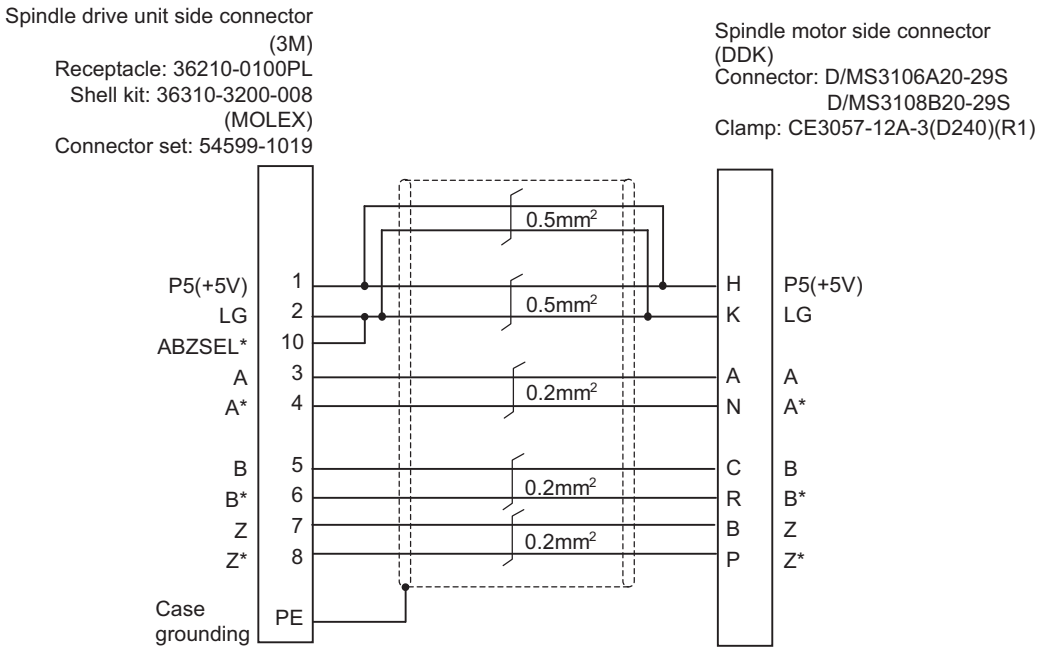

<Cable connection diagram (for 15m to 30m)>

7.3.4 CNV2E-8P/CNV2E-9P Cable

Max. cable length: 30m

Application: For HF/HF-H, HF-KP (Tool spindle) Motor side encoder cable (for A48/A51/A74N(/A74)) / For HF-KP (Servo) Motor side encoder relay cable (Drive unit side) (CNV2E-8P)

CNV2E-8P (Straight)

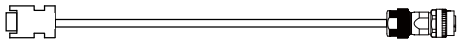

CNV2E-9P (Angle)

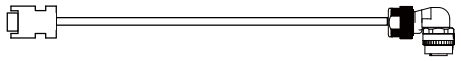

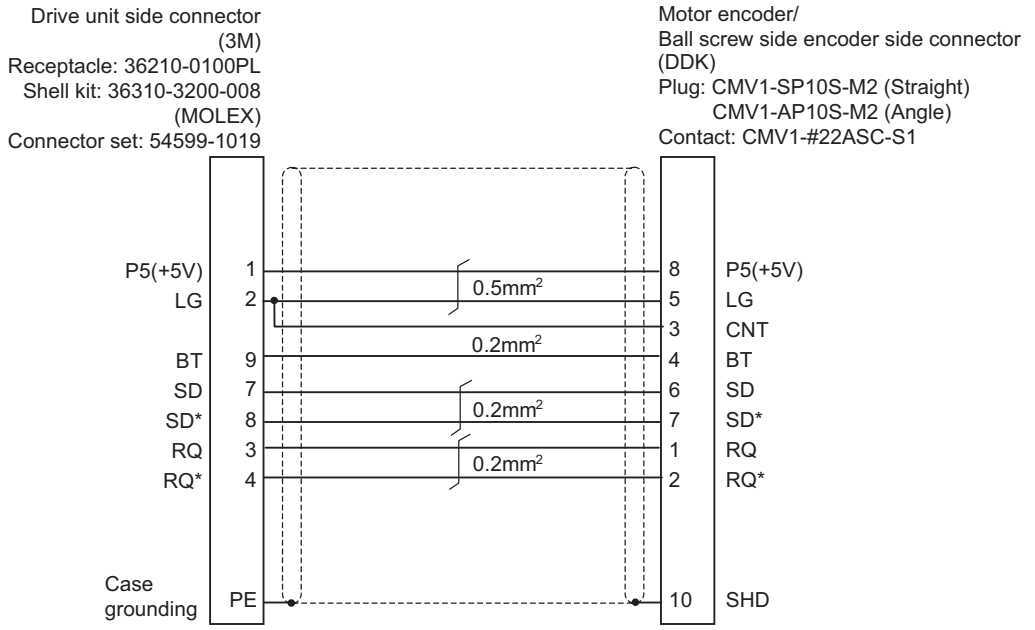

<Cable connection diagram (for 15m or less)>

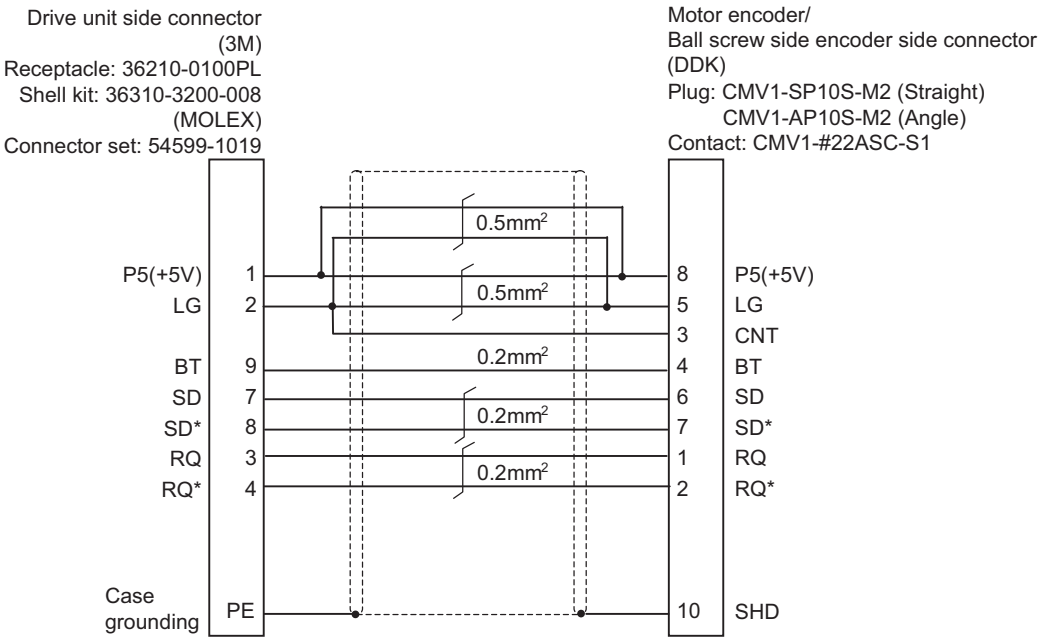

<Cable connection diagram (for 15m to 30m)>

7.3.5 CNV2E-D Cable

Max. cable length: 30m

Application: MDS-B-SD unit cable

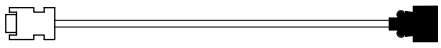

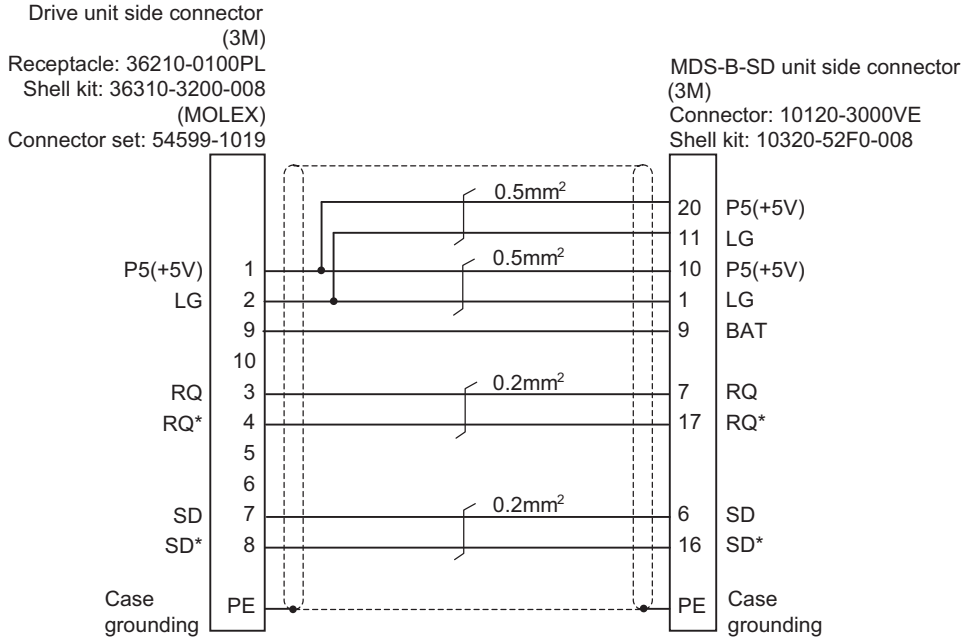

<Cable connection diagram>

7.3.6 CNV2E-HP Cable

Max. cable length: 30m

Application: MDS-B-HR unit cable

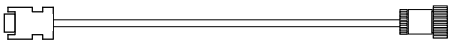

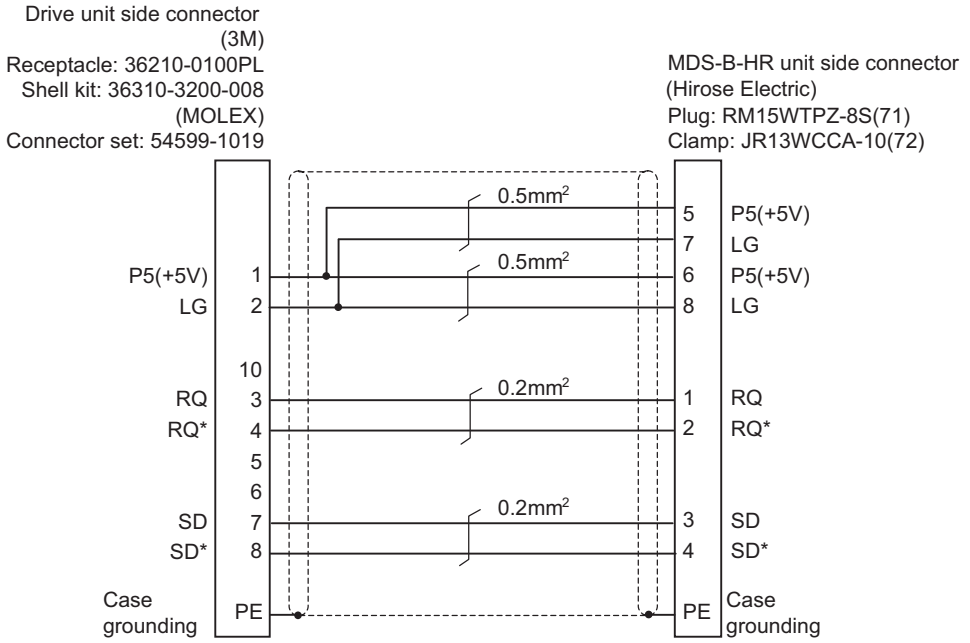

<Cable connection diagram>

7.3.7 DG30 Cable

Max. cable length: 10m
Application: Battery cable
(drive unit - battery box, drive unit - drive unit)

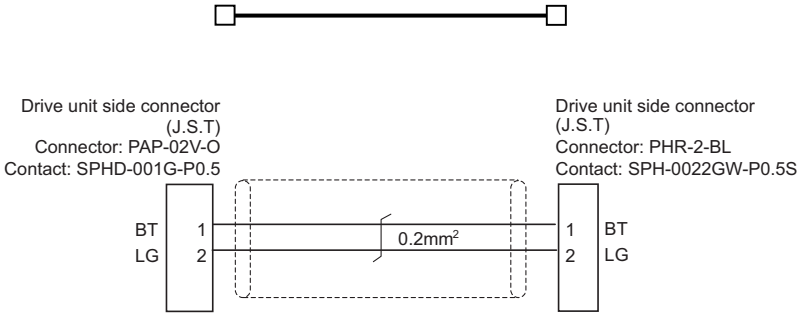

7.3.8 G380 Cable

Max. cable length: 30m
Application: Optical communication cable
for wiring between drive units (outside panel)
for optical communication repeater unit
Use when the cable length is 10m or more to 30m or less.

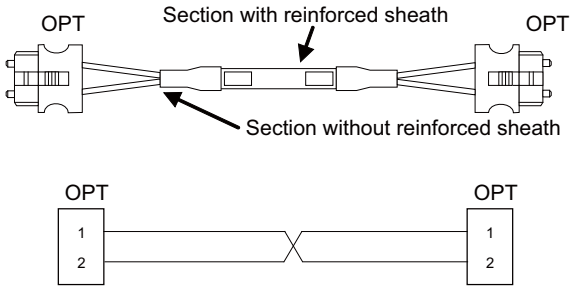

[OPT]
Connector: CF-2D103-S
Manufacturer: Japan Aviation Electronics

Wire material: Hard clad type PCF optic cable
Manufacturer: Oki Electric Cable

Cable	Minimum bending radius: R
2-core cable (section with reinforced sheath)	50mm
2-core cable (section without reinforced sheath)	25mm

(Note 1) Binding the cables too tight with tie-wraps could result in an increased loss or a disconnection. Use a cushioning material such as a sponge or rubber when bundling the cables and fix so that the cables do not move. (Clamp material for reference: KITAGAWA INDUSTRIES CKN-13SP)

(Note 2) Never bundle the cables with vinyl tape. The plasticizing material in the vinyl tape could cause the PCF cable reinforced sheath to damage.

(Note 3) Loop the excessive cable with twice or more than the minimum bending radius.

7.3.9 J395 Cable

Max. cable length: 10m

Application: Optical communication cable

for wiring between drive units (outside panel)

for wiring between NC-drive units

Use when wiring outside of the panel with a cable of 10m or less.

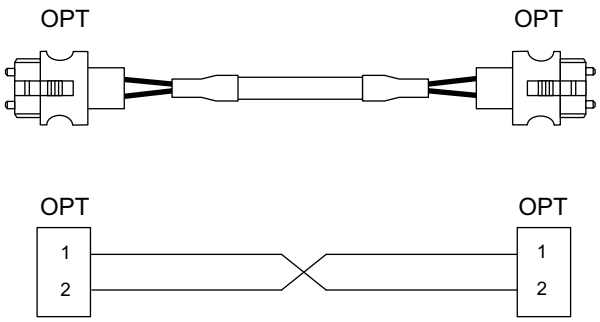

[OPT]
Connector: LGP-Z0007PK
Manufacturer: HONDA TSUSHIN KOGYO

Wire material: PFDU-CL1002-22E60VT
Manufacturer: TORAY

Cable	Minimum bending radius: R
2-core cable (section with reinforced sheath)	50mm
2-core cable (section without reinforced sheath)	30mm

(Note 1) Binding the cables too tight with tie-wraps could result in an increased loss or a disconnection. Use a cushioning material such as a sponge or rubber when bundling the cables and fix so that the cables do not move. (Clamp material for reference: KITAGAWA INDUSTRIES CKN-13SP)

(Note 2) Never bundle the cables with vinyl tape. The plasticizing material in the vinyl tape could cause the POF cable to break.

(Note 3) Loop the excessive cable with twice or more than the minimum bending radius.

7.3.10 J396 Cable

Max. cable length: 10m

Application: Optical communication cable

for wiring between drive units (inside panel)

Use when wiring in the panel with a cable of 10m or less.

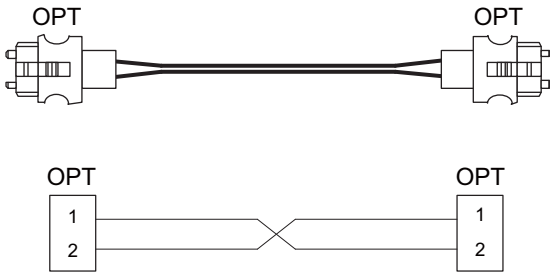

[OPT]
Connector: LGP-Z0007PK
Manufacturer: HONDA TSUSHIN KOGYO

Wire material: PFDU-CD1002-18E22T
Manufacturer: TORAY

Cable	Minimum bending radius: R
2-core parallel cord	30mm

(Note 1) Binding the cables too tight with tie-wraps could result in an increased loss or a disconnection. Use a cushioning material such as a sponge or rubber when bundling the cables and fix so that the cables do not move. (Clamp material for reference: KITAGAWA INDUSTRIES CKN-13SP)

(Note 2) Never bundle the cables with vinyl tape. The plasticizing material in the vinyl tape could cause the POF cable to break.

(Note 3) Loop the excessive cable with twice or more than the minimum bending radius.

7.3.11 MR-BKS1CBL-A1-H / MR-BKS1CBL-A2-H Cable

Max. cable length: 10m

Application: <200V Series> Brake cable for HG96

MR-BKS1CBL-A1-H (load side angle)

MR-BKS1CBL-A2-H (reverse load side angle)

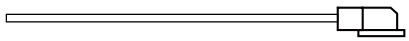

Servo motor brake connector
(Japan Aviation Electronics)
Connector: JN4FT02SJ1-R
Hood, Socket insulator,
Bushing and Ground nut
Contact: ST-TMH-S-C1B-100(A534G)
Crimp tool: CT160-3TMH5B

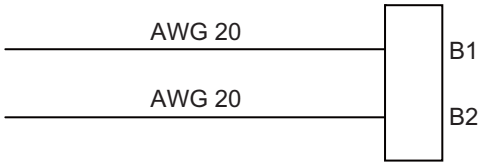

<Cable connection diagram>

7.3.12 MR-BT6V2CBL Cable

Max. cable length: 1m

Application: Battery cable (MDS-EJ/EJH)

(drive unit - drive unit)

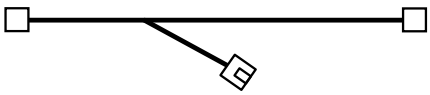

Drive unit side connector
(J.S.T)
Connector: PAP-02V-O
Contact: SPHD-001G-P0.5

Drive unit side connector
(J.S.T)
Connector: PAP-02V-O
Contact: SPHD-001G-P0.5

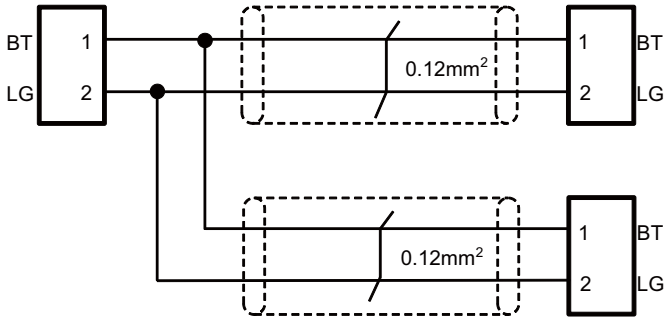

Battery unit side connector
(J.S.T)
Connector: PALR-02VF
Contact: SPAL-001T-P0.5

7.3.13 MR-D05UDL3M-B Cable

Max. cable length: 3m
Application: STO cable

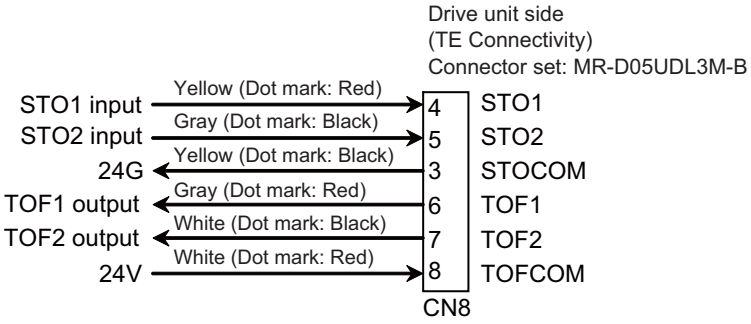

7.3.14 MR-PWS1CBL-A1-H / MR-PWS1CBL-A2-H Cable

Max. cable length: 10m
Application: <200V Series> Power cable for HG96
MR-PWS1CBL-A1-H (load side angle)
MR-PWS1CBL-A2-H (reverse load side angle)

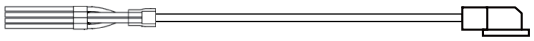

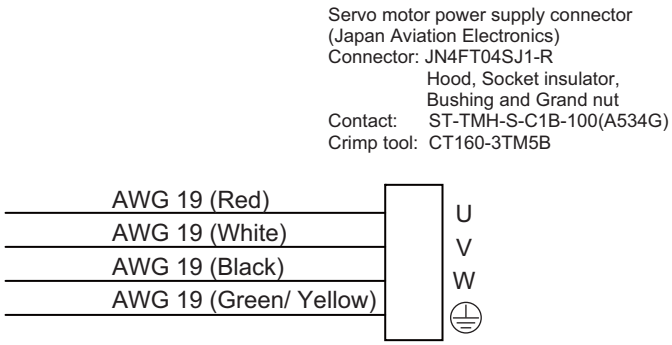

<Cable connection diagram>

7.3.15 SH21 Cable

Max. cable length: 30m

Application: Power supply communication cable

Power backup unit communication cable

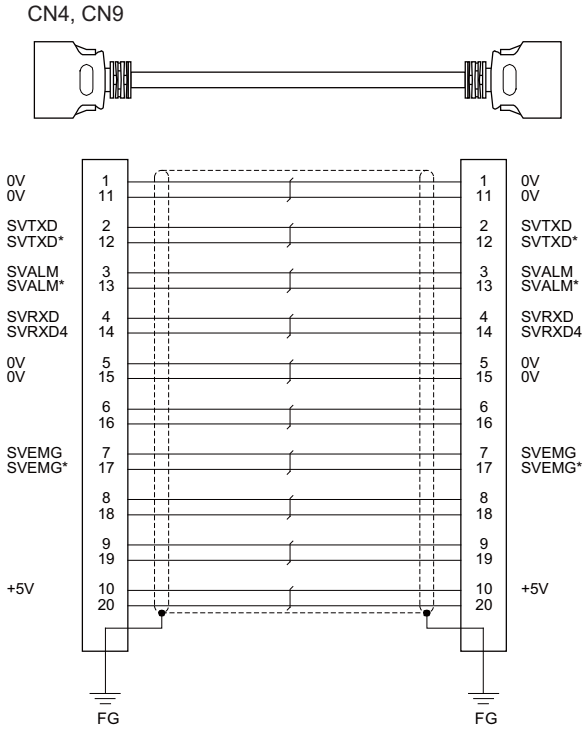

[CN4,CN9]
Plug: 10120-3000PE
Shell: 10320-52F0-008
Manufacturer: 3M

Wire material: UL20276 AWG28×10P
Manufacturer: Toyokuni Electric Cable

Plug: 10120-3000PE
Shell: 10320-52F0-008
Manufacturer: 3M

(Note 1) Fold the cable shield over the sheath, and wrap copper foil tape over it. Connect the wound copper foil tape to GND plate of the connector.

(Note 2) When using the jackscrew M2.6-type 10320-52A0-008 for the shell, do not fasten the screws too tightly otherwise the connector and the PCB may be damaged.
(Manufacturer recommended tightening torque: 0.20±0.05N·m)

8

Setup Outline

The following chapters explain the procedures to setup C80.
Procedures when setting up again (with backup files of parameters and so on) are different from those of initial setup.
For initial setup, see "Flow of the initial setup".
When setting up with the backup file, see the chapter of "Data Backup and Restoration".

8.1 Flow of the Initial Setup

The following shows the overall flow of the initial setup.

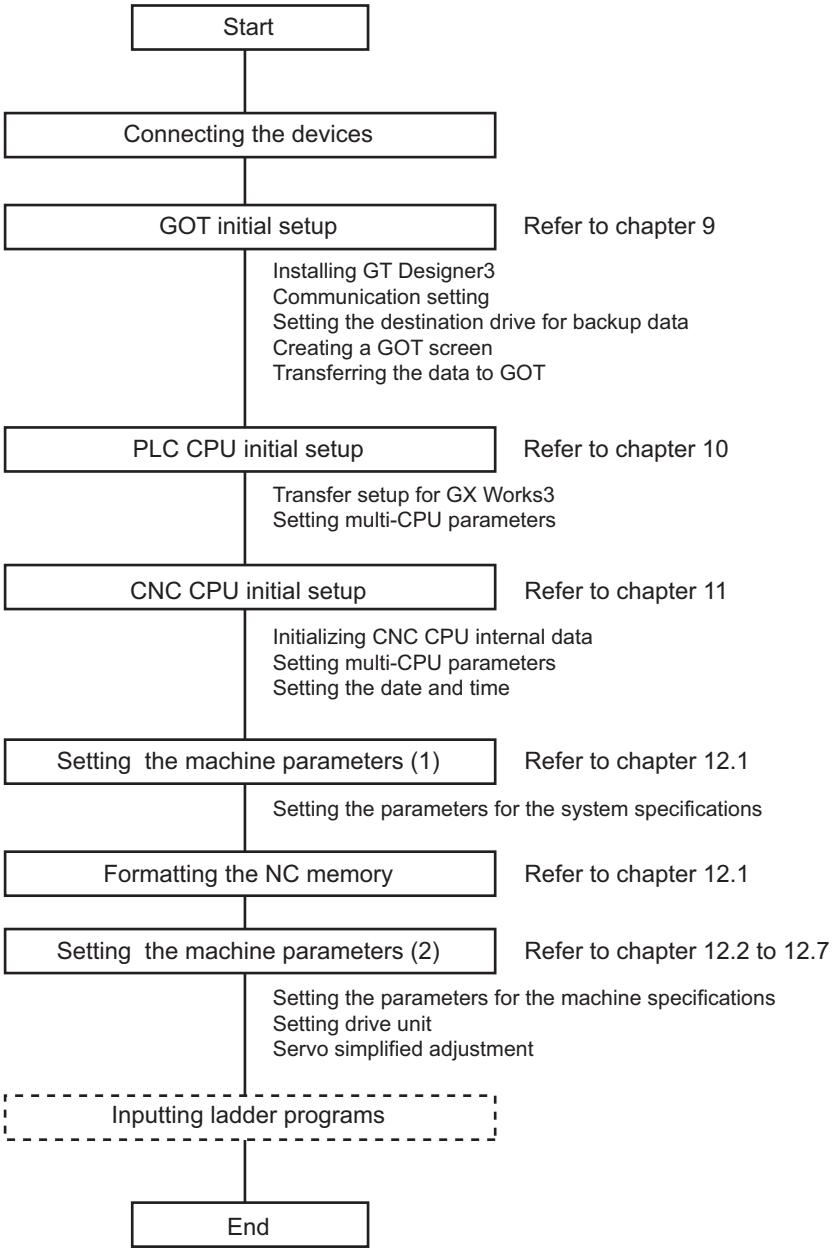

Refer to the following chapters for setting the machine control functions.
- Setting the Position Detection System
- Setting the Tool Entry Prohibited Range
- Setting the Machine Error Compensation
- Setting the Position Switches
- Setting the Backlash Compensation
- Deceleration Check

9

GOT Initial Setup

9.1 GT Designer3

Transfer the project data, where required settings have been made, to GOT.

9.1.1 Installing GT Designer3

(1) Install GT Designer3 to the personal computer.

For the install procedure, refer to "GT Works3 Installation Instructions" (BCN-P5999-0066).

9.1.2 Making Communication Settings

Make communication settings on a GT Designer3 project.

9.1.2.1 Setting Ethernet Connection

This section explains the setting procedure for Ethernet connection taking GOT2000 Series GT27 (SVGA) as an example.

Connect a Ethernet cable to the CNC CPU module and the GOT Ethernet interface.

The following two IP addresses need to be set in order to establish the Ethernet connection.

GOT's IP address (192.168.200.2 in this manual)

CNC CPU module's IP address (192.168.200.1)

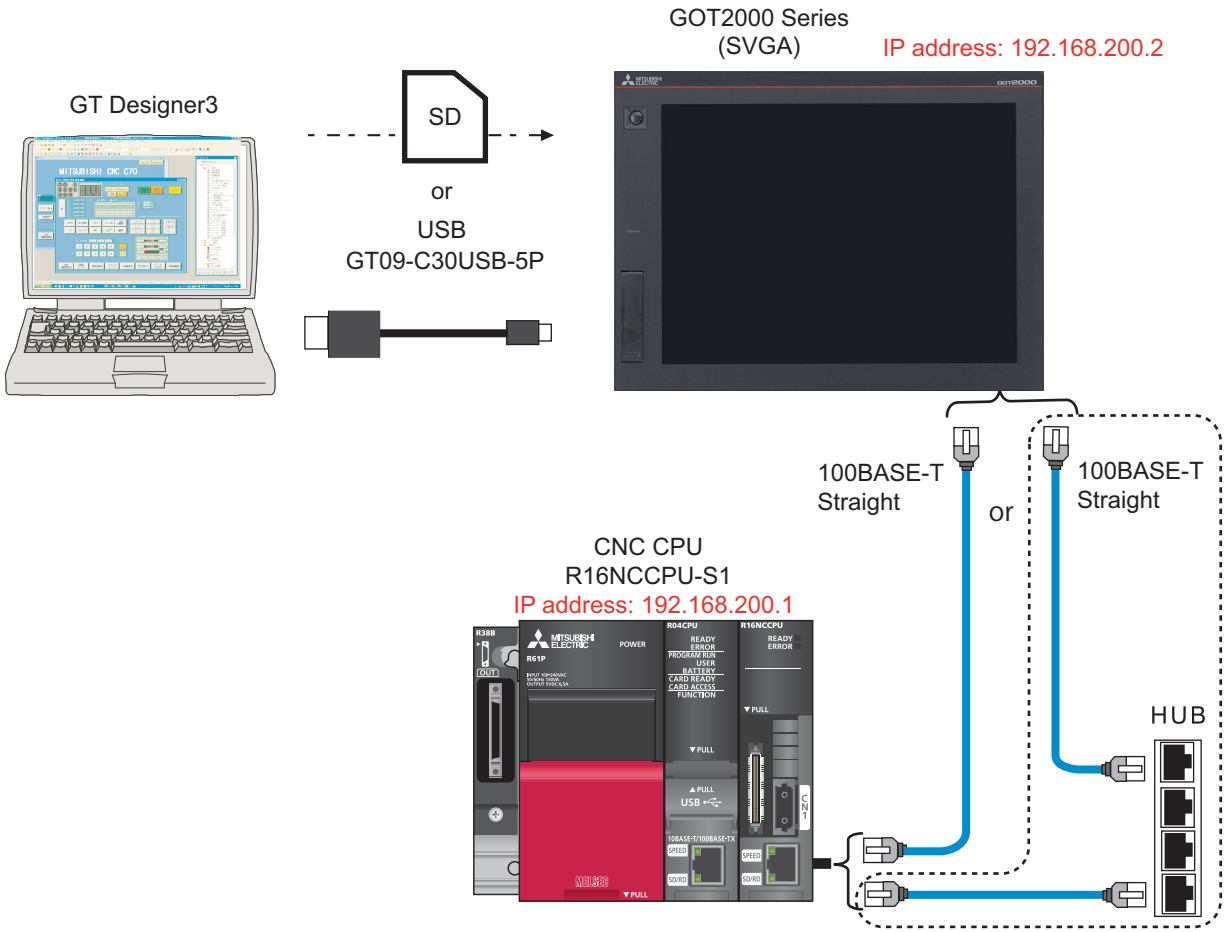

(Note 1) When connecting to a personal computer and a module with USB interface, an electric shock or a module failure may occur depending on the model of a personal computer or the service condition.
Be sure to refer to "Items related to connection" on "Precautions for Safety" before connecting them.

(Note 2) Unless there is a specific reason, set the CNC CPU default IP address (192.168.200.1).
If any other IP adress is set, the backup data created with GOT backup and restore function cannot be restored to the replaced CNC CPU module, which has a default IP address.

Setting procedures using the "New Project Wizard" on GT Designer3 are as follows.

(1) When starting GT Designer3, the "New Project Wizard" dialog box will appear.
When clicking [Next], "GOT System Setting" dialog box of the "New Project Wizard" will appear.

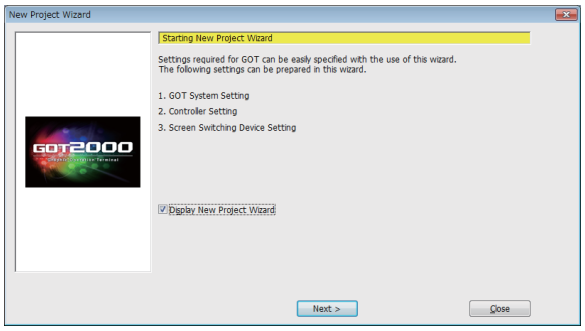

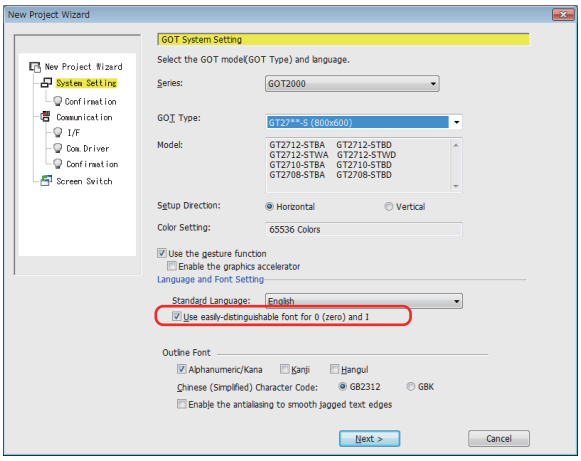

When checking the box of "Use easily-distinguishable font for 0 (zero) and I", the distinction of the letter will be easier.

(2) After selecting the item for the GOT Type from the pull-down menu, click [Next].
GOT Type: Select a GOT model to be used. (The below drawing shows the screen when selecting "GT27**-S…".)
When "Confirmation of GOT System Setting" is displayed in the "New Project Wizard", confirm the content and then click [Next].
When "Setting of Controller (1st)" of "Communication" dialog is displayed, select the items according to the followings in the pull-down menu.
Manufacturer: MITSUBISHI ELECTRIC
Controller Type: MELSEC iQ-R, R n MT/NC

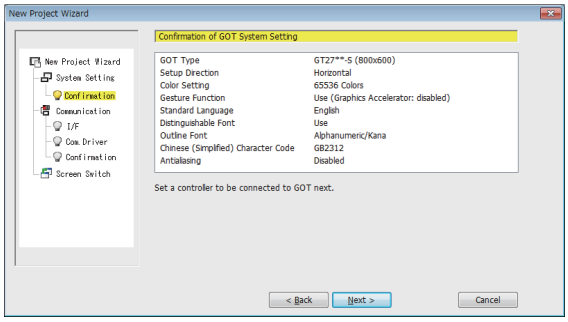

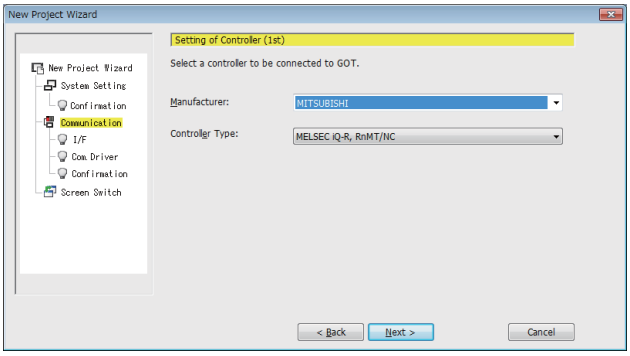

(3) After setting the "Setting of Controller (1st)", click [Next]. When "connect I/F of MELSEC iQ-R, RnMT/NC" selection dialog is displayed, select "Standard I/F (Ethernet): Multi" from the I/F(I) pull-down menu.

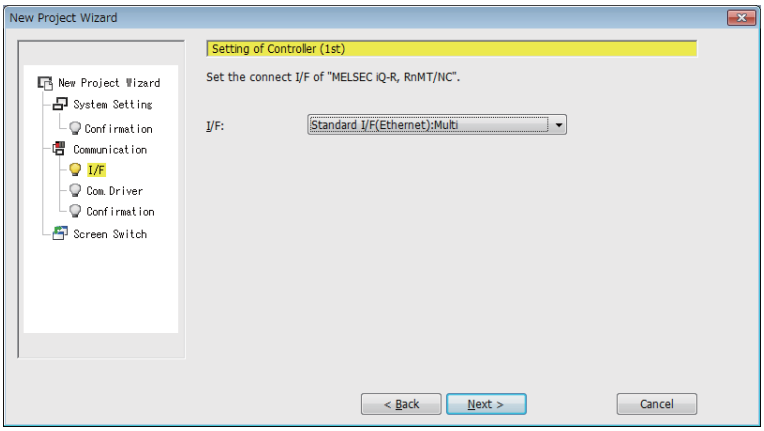

(4) Click [Next] and when "communication driver of MELSEC iQ-R, RnMT/NC" selection dialog is displayed, select "Ethernet (MELSEC), Q173nNC, CRnD-700, Gateway" from the pull-down menu of the Communication Driver.

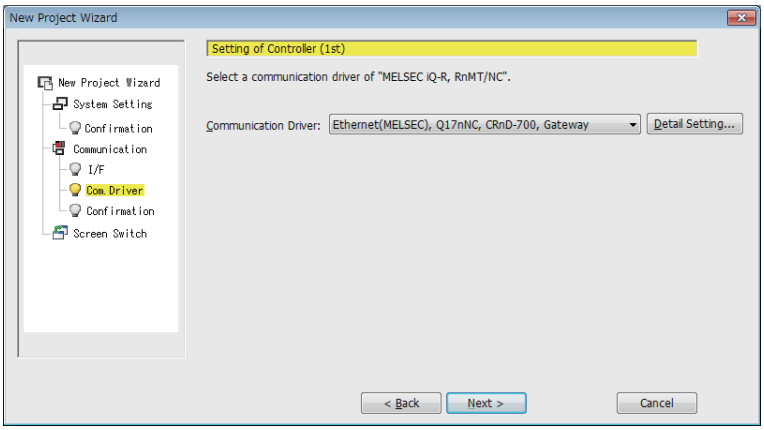

(5) Click [Next] and when a dialog box to confirm the setting items appears, confirm the setting items.

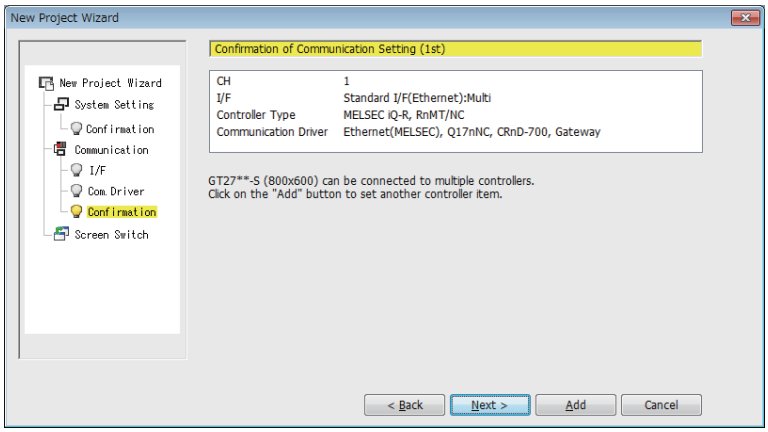

(6) When clicking [Next], "Screen Switching Device Setting" dialog will be displayed.

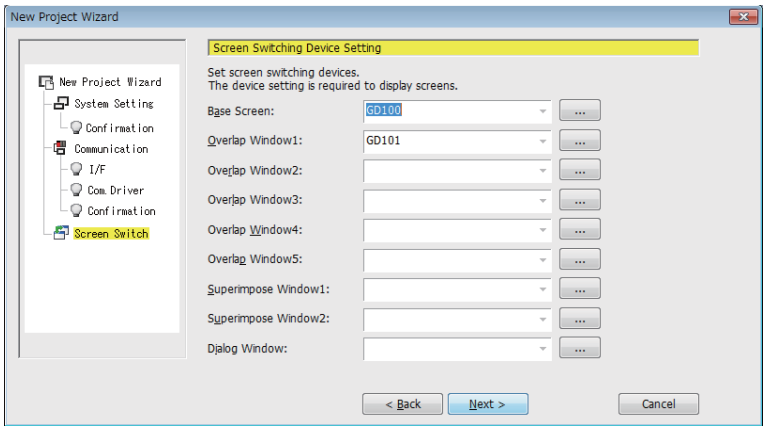

(7) Set the devices such as "Base Screen" and "Overlap Window1".

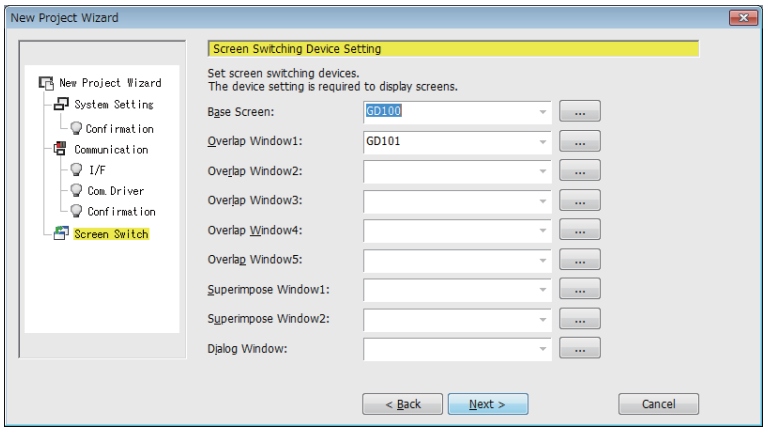

(8) Click [Next] and when a dialog box to confirm the setting items appears, confirm the setting items and then click [Finish].

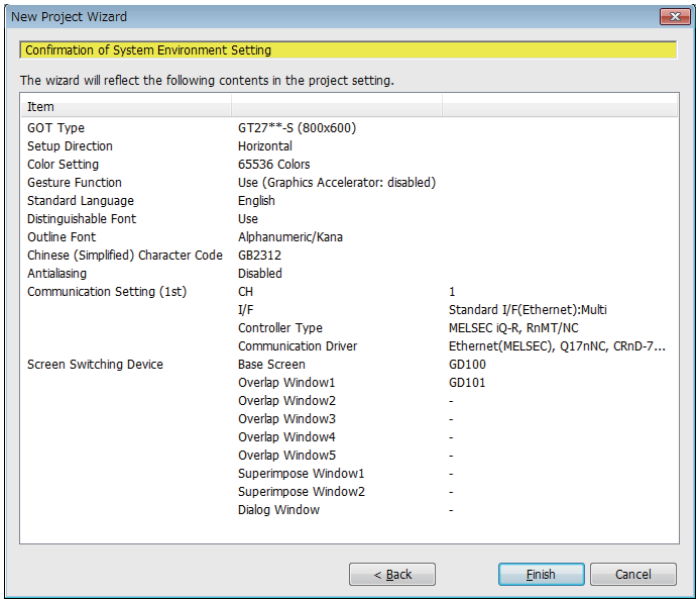

(9) When "Screen" creation is displayed, click [System] and then double click "CH1 : MELSEC ｉQ-R, RnMT/NC" of "Communication". "Communication" dialog will be displayed.

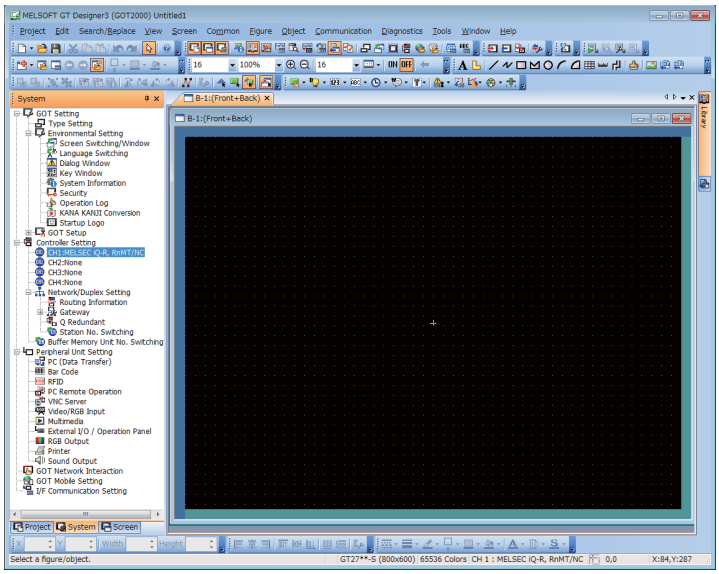

Confirm the following items and make Ethernet setting.

<Confirmation items>

Manufacturer: MITSUBISHI ELECTRIC

Controller Type: MELSEC iQ-R, R n MT/NC

I/F: Standard I/F(Ethernet): Corresponds to multi-connection

Driver: Ethernet(MELSEC), Q17nNC, CRnD-700 Gateway

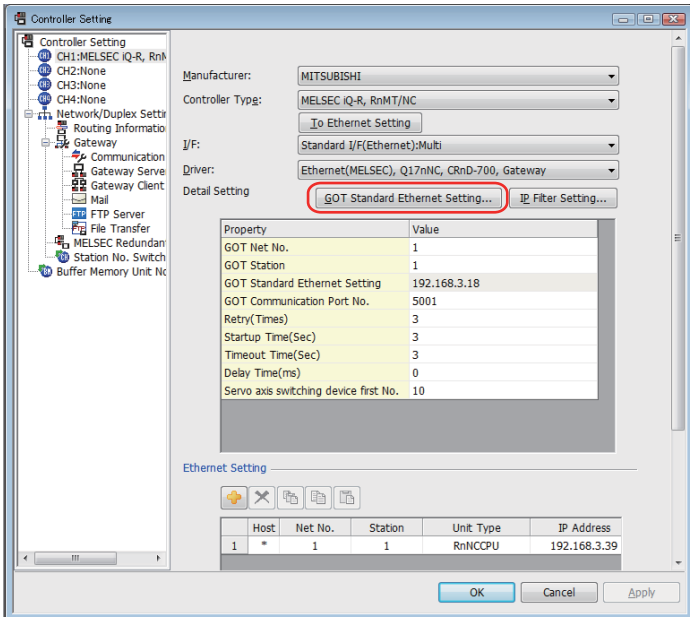

<Setting items>

Detail Setting: GOT standard Ethernet setting IP address

Setting IP address: 192.168.200.2

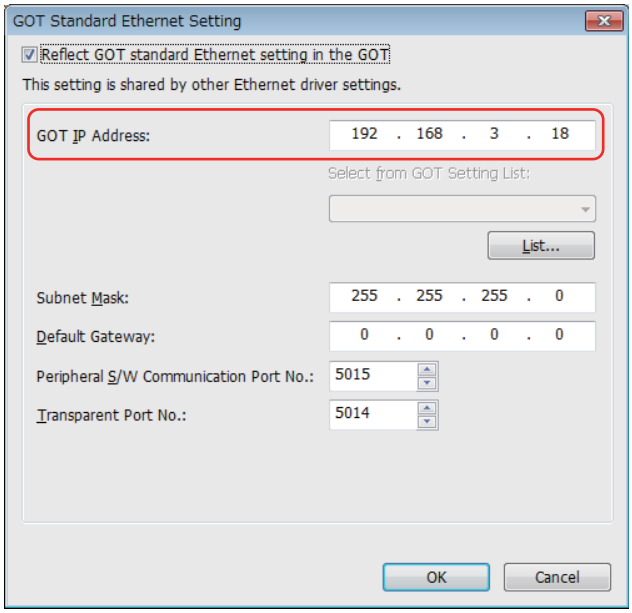

(10) After setting the IP address, click [OK] to return to the "Communication" dialog.
Next, set the IP address in [Ethernet setting].

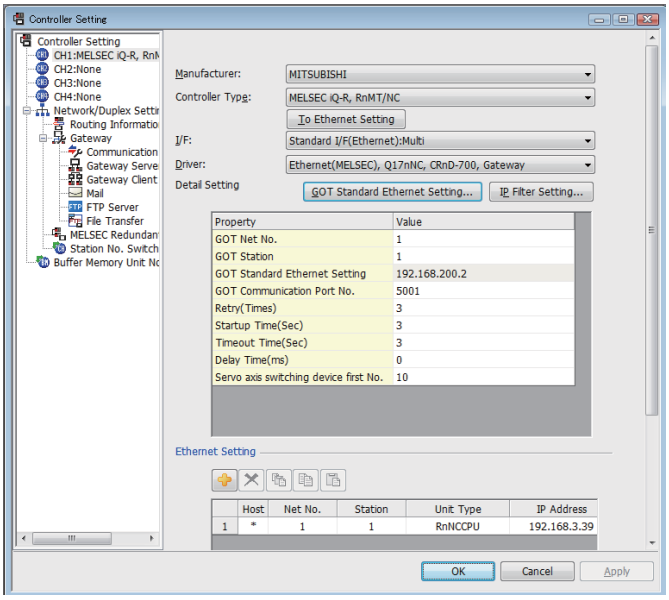

<Setting items>
Detail Setting: C80 IP address and station No.
IP address: 192.168.200.1
Station: 2 (A different No. from the GOT station.)

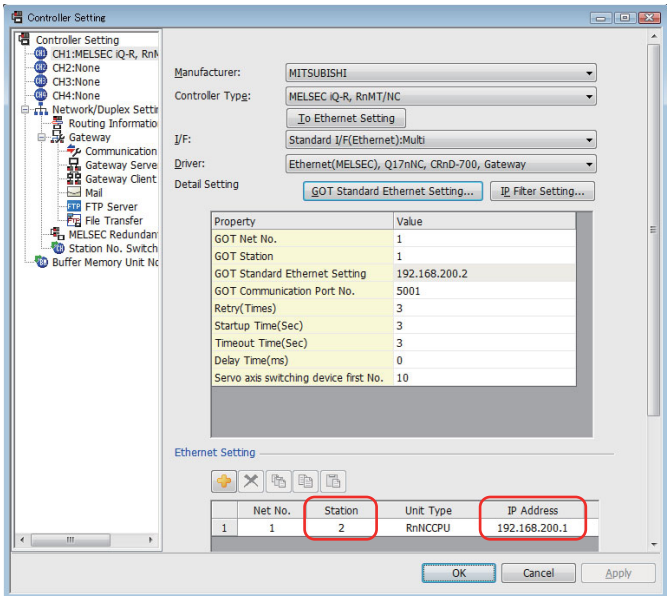

After setting, click [OK] to apply the setting value.

9.1.3 Setting the Saving Destination Drive for Backup Data

A saving destination drive for backup data (Refer to "Data Backup and Restoration") needs to be set on the GT Designer3 project.
"A: Standard CF Card" or "E: USB Drive" can be chosen.

(1) Open the GT Designer3 project on the personal computer, and select [Common]-[GOT Setup]-[Basic Setting]-[Display Setting/Language Setting].

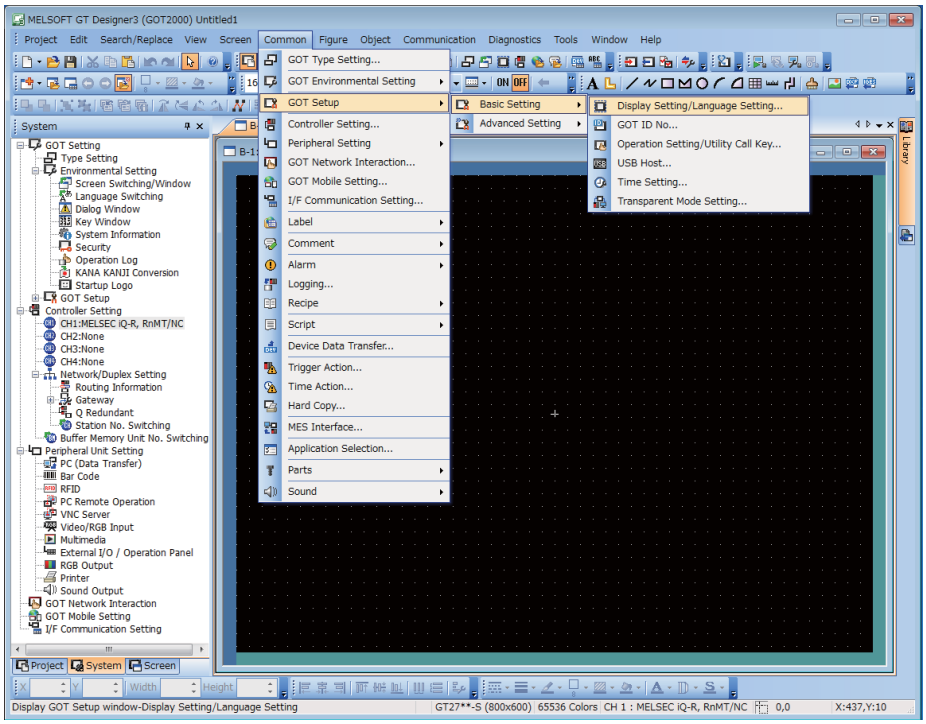

(2) When checking the box of "Operation Setting/Utility Call Key" on the GOT setup screen, items for [Update the setting of operation/utility call key] which are grayed out will be activated.
When checking the box of [Update the setting of operation/utility call key], items which are grayed out will be activated.

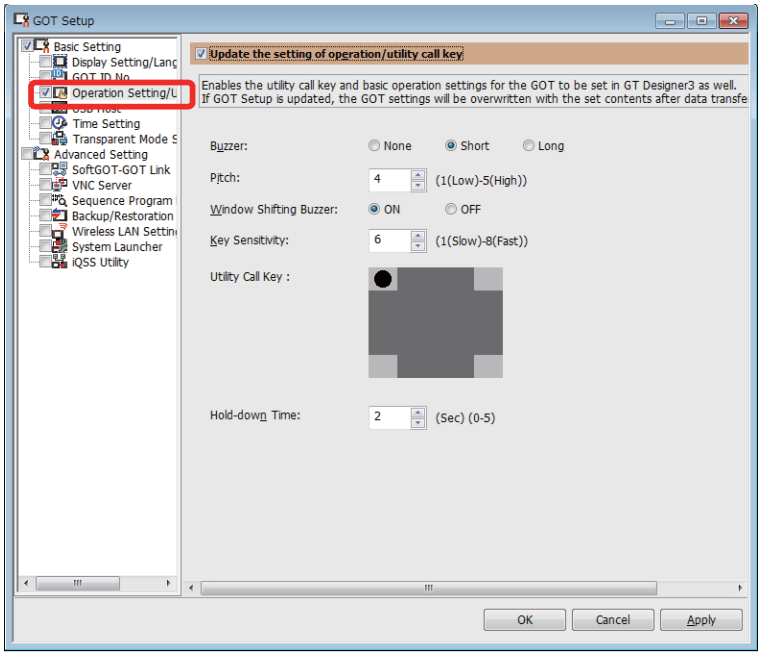

(3) On the GOT setup screen, check "Backup/Restoration" and select "Destination for Backup Setting" and "Destination for Backup Data".

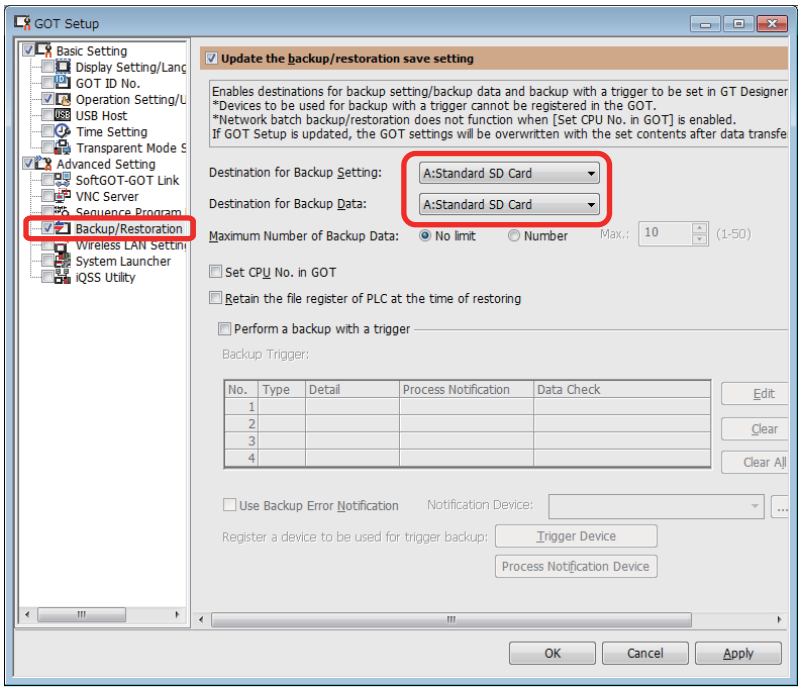

(4) Check the box of "Sequence Program Monitor" on the GOT setup screen.

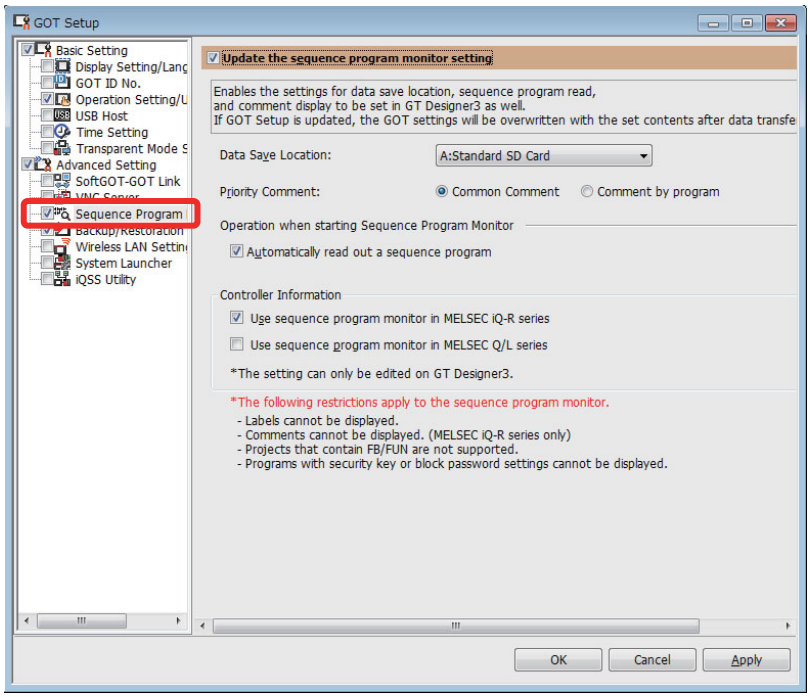

After setting, click "OK" to close the "GOT Setup" dialog box.

9.1.4 Setting Time on GOT

The method to match the time data of the GOT to that of the C80 data needs to be set in the GT Designer3 project.

(1) Open the GT Designer3 project on the personal computer.

(2) Select [Common]-[GOT Setup]-[Basic setting]-[Display setting/Language setting].

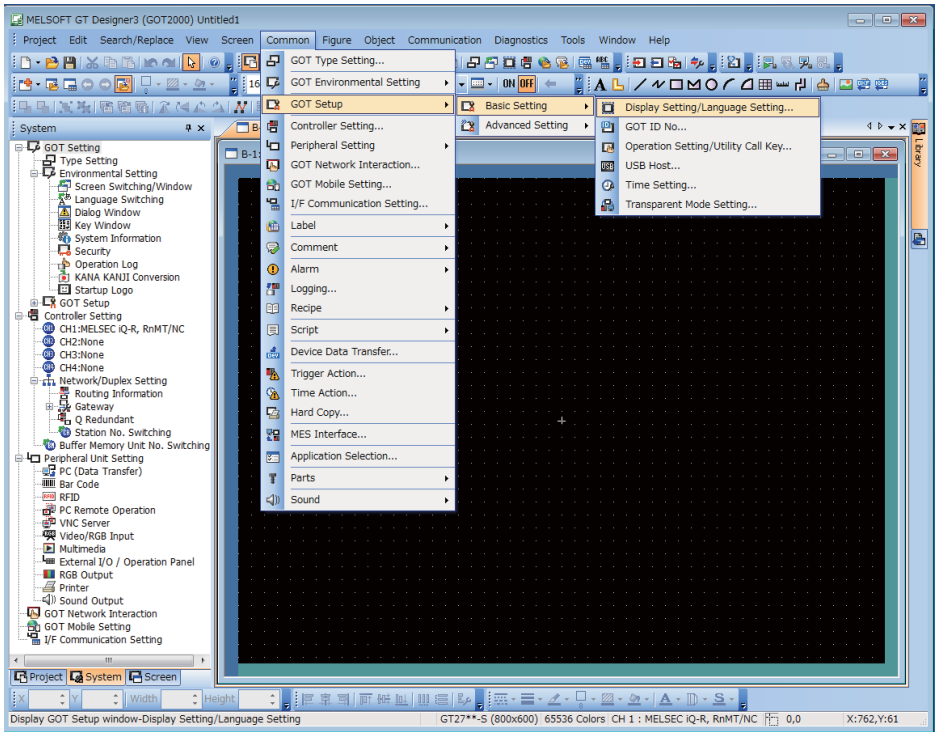

(3) Check the box of "Time Setting" on the GOT setting screen.
The dialog box items for the "time setting" which are grayed out will be displayed.

(4) Check the box of [Update the time setting].
The items which were grayed out will be able to be set.

(5) Check the box of [Adjust the clock].

(6) Press [OK].

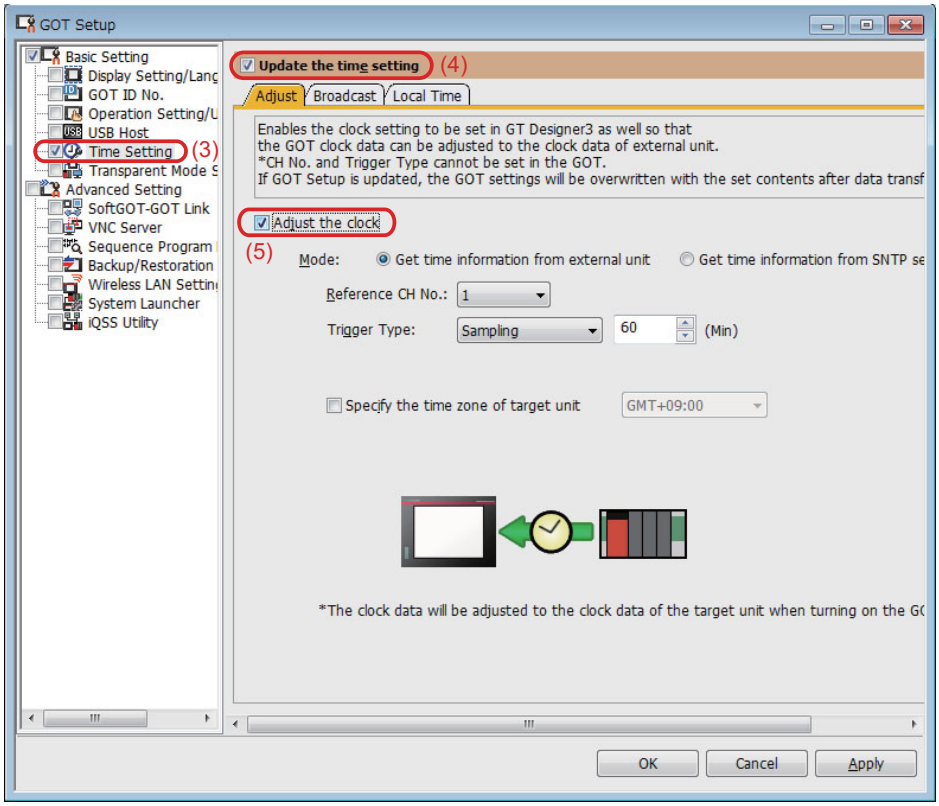

With the above setting, the time adjustment will be performed at the time GOT is turned ON and in 60-minute periods Set the trigger type and the period time as required.

9.1.5 Creating a GOT Screen

Create a screen to display on GOT in the GT Designer3 project data. This manual explains precautions for device setting and how to set a special function switch.
For details, refer to the "GT Designer3 (GOT2000) Screen Design Manual" (SH(NA)-081220).

9.1.5.1 Precautions for Device Settings

When setting the device which is not GOT device (GS/GD/GB) for the objects such as switch, lamp or numerical display, the referred CPU (PLC CPU, CNC CPU) needs to be designated.
Set the "CPU No." on the device detail setting screen.
Select "1" for referring the PLC CPU (CPU No.1), or select "2" for referring the CNC CPU (CPU No.2).

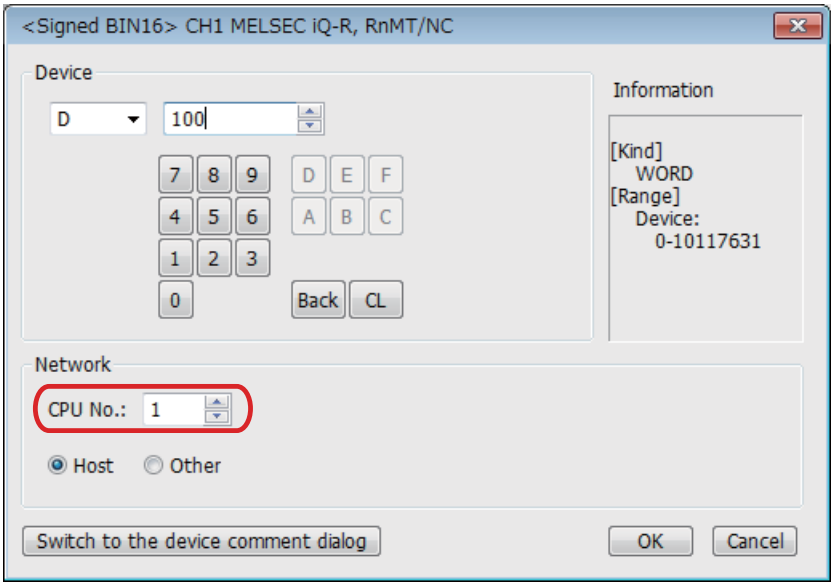

After being set, the device will be displayed as follow.

0-FF/(No.) (Device No.)

(Example 1) When referring to PLC CPU D100:
"0-FF/1 D100"

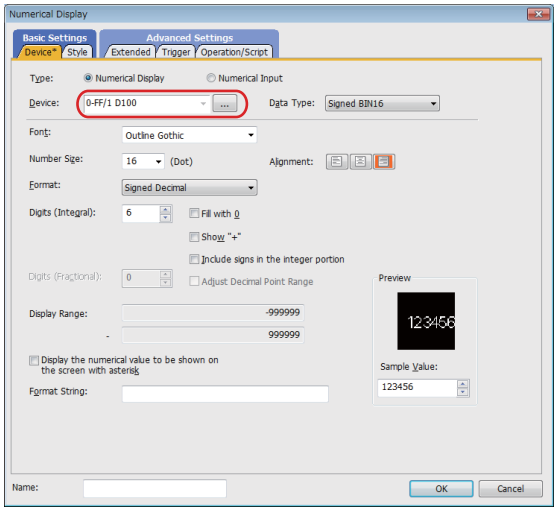

(Example 2) When referring to CNC CPU D100:
"0-FF/2 D100"

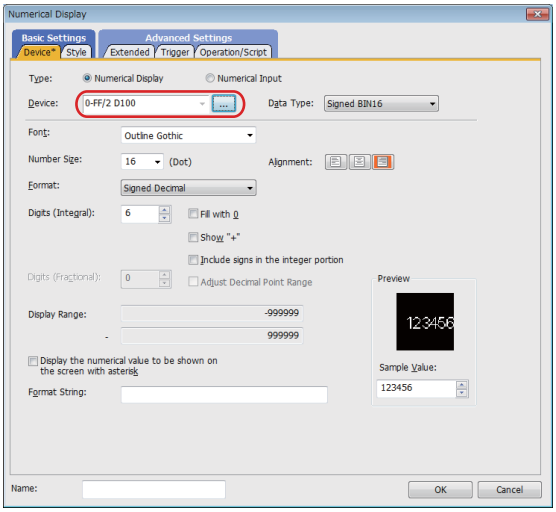

9.1.5.2 Special Function Switch

Special Function Switch allows to make a button to display CNC monitor 2, sequence program monitor (R Ladder), backup/restoration and so on.

(1) Select [Object] - [Switch] - [Special Function Switch].

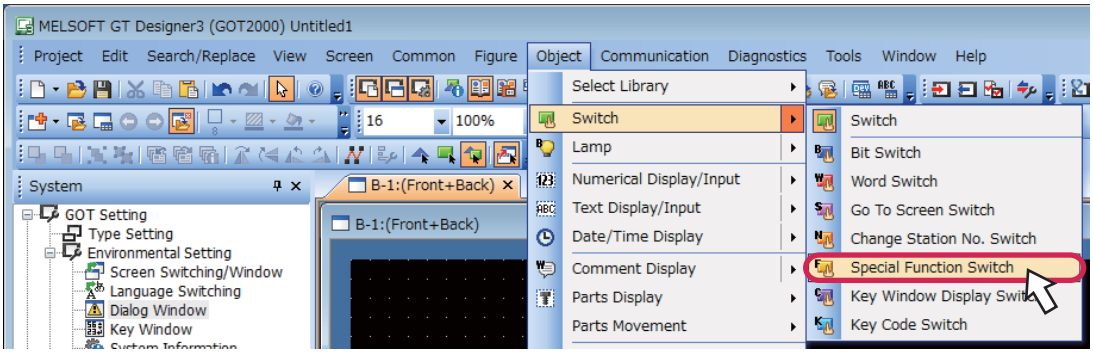

(2) Create a switch then double click it. Select the screen to display from "Switch Action" in "SP Function" tab. To display CNC monitor 2, select "CNC Monitor 2" and to display backup/restoration monitor, select "Backup/Restoration".

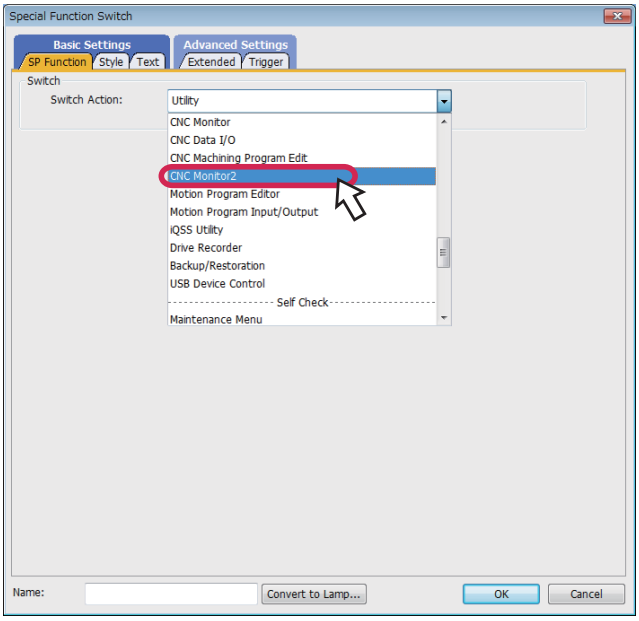

9.1.6 Writing the Package Data to GOT

Transferring the package data (project, system application such as the basic function and the extended function, and the communication driver) to the GOT.
This chapter explains the procedures to transfer the data from the computer to the GOT using a USB cable.
For other data transfers using the data storage such as an SD card or a USB memory, refer to Chapter 4 in "GT Designer3 (GOT2000) Screen Design Manual" (SH(NA)-081220).

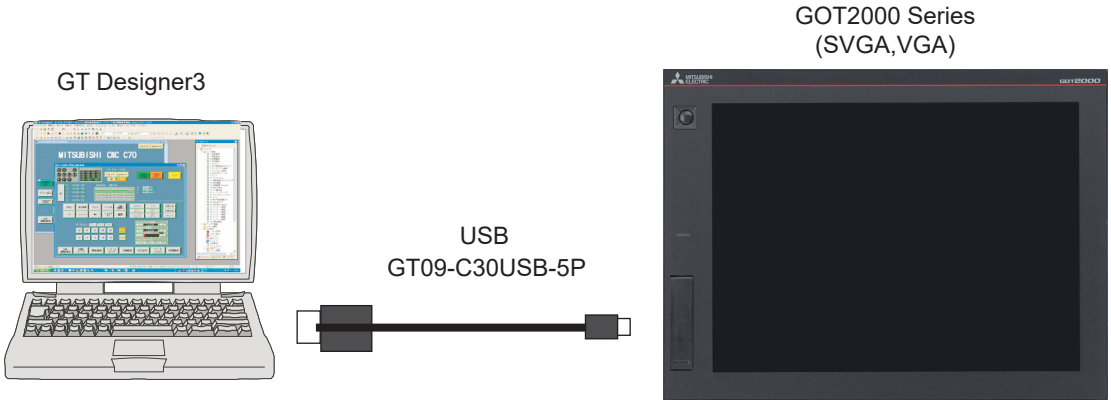

(1) Turn ON the GOT, start GT Designer3 on the personal computer, and select [Communication]-[Communication Configuration...] from the menu bar.

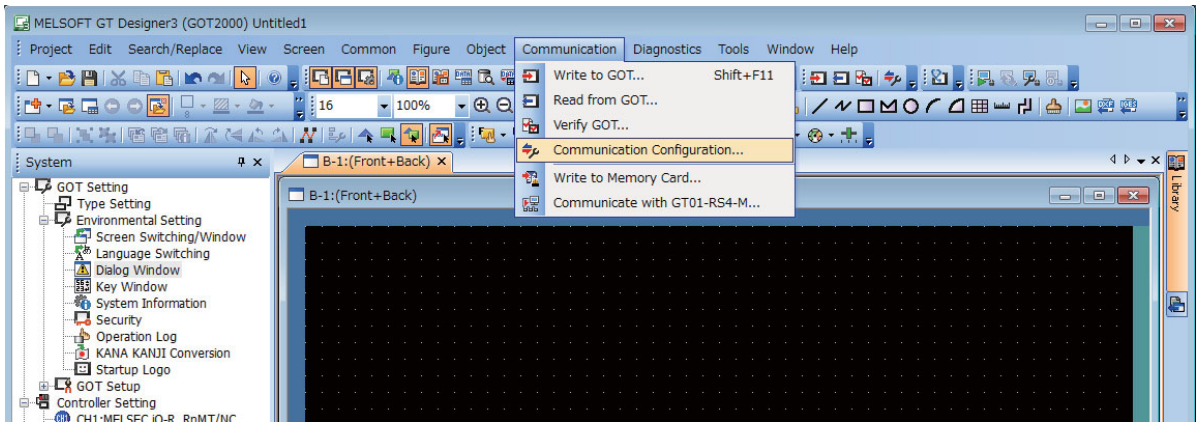

(Note) At starting GT Designer3, if the "New Project Wizard" dialog box appears, close the dialog box.

(2) Select "USB" for the communication type in the dialog box. Click "Test".
Confirm the message "Successfully connected", and click "OK".

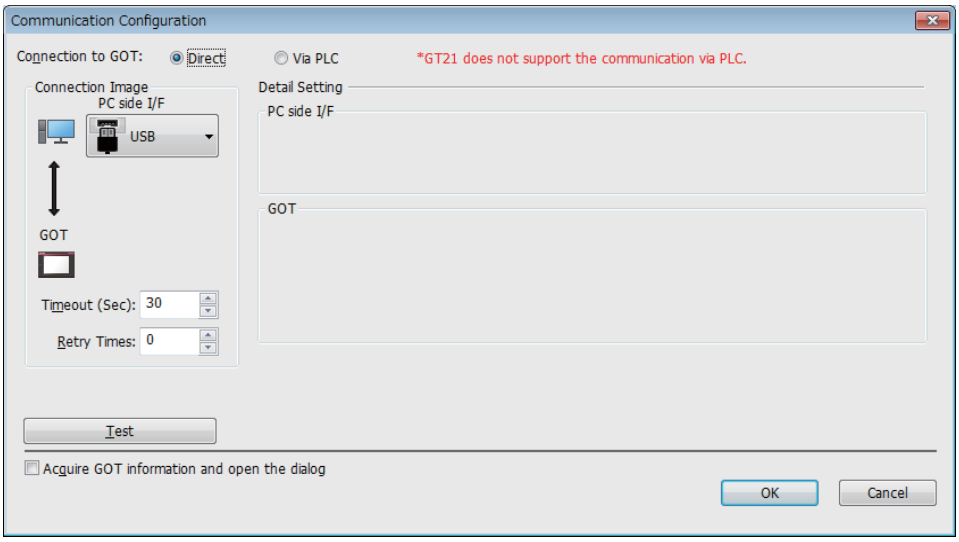

(3) Select [Write to GOT...] from the [Communication] menu.

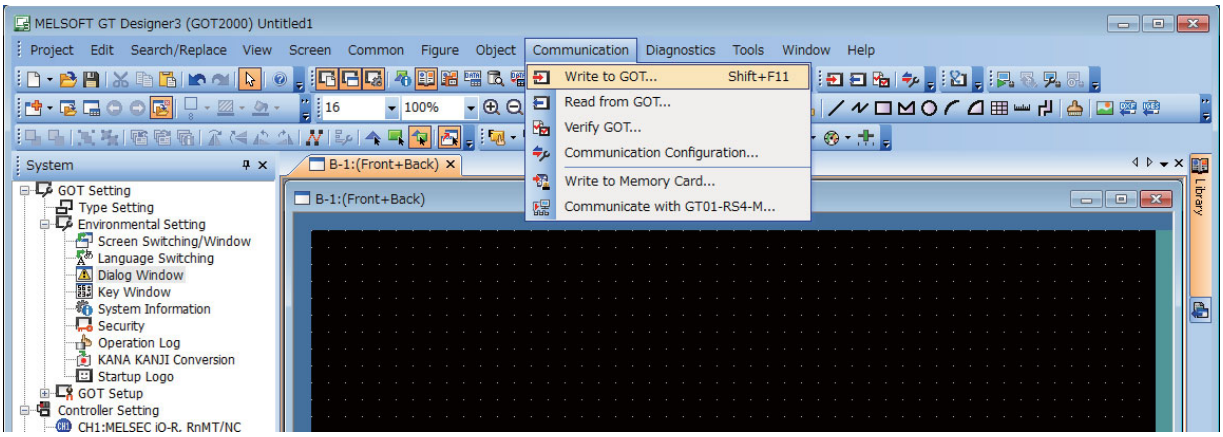

(4) Select [OK].

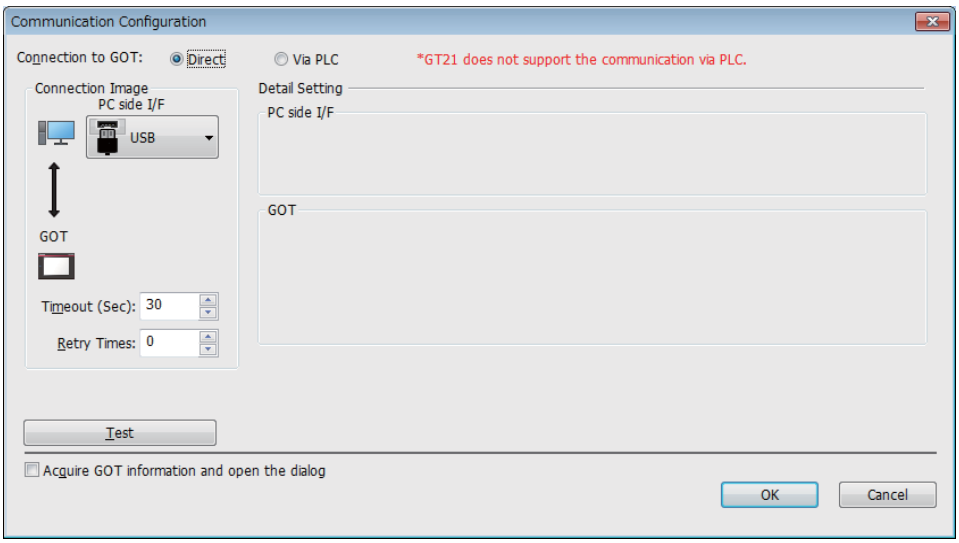

(5) Select "Write Data" and "Destination Drive" and then click [GOT Write] button.

When writing the package data, open the Application Selection setting dialog and confirm that the following recommended settings are selected for the Application Selection.

How to display the Application Selection dialog:

Click "Write Option" to open the Write dialog and then click "Application Selection".

<Recommended setting>

- PLC program monitor: PLC program monitor (R Ladder) [01.18.000] or later
- Backup and restore [01.16.000] or later
- CNC monitor 2
  - SVGA : [01.16.000] or later
  - VGA : [01.18.000] or later
- GOT platform library [01.16.000] or later
- GOT extended function library [01.18.000] or later

Select the other functions than the above as required.

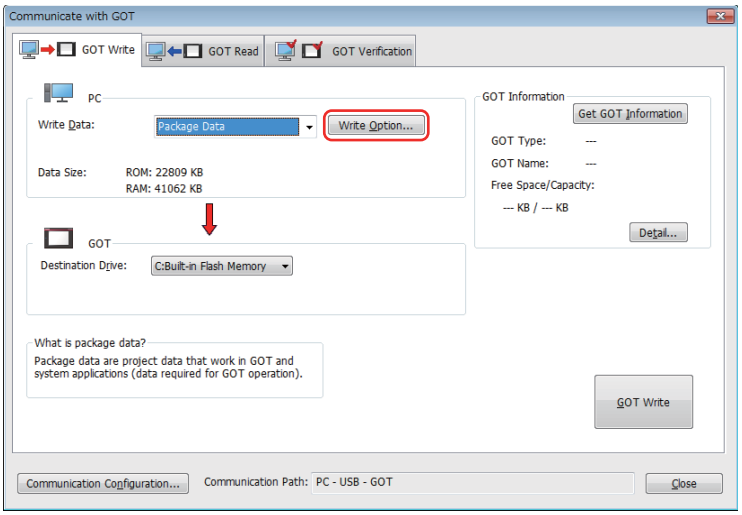

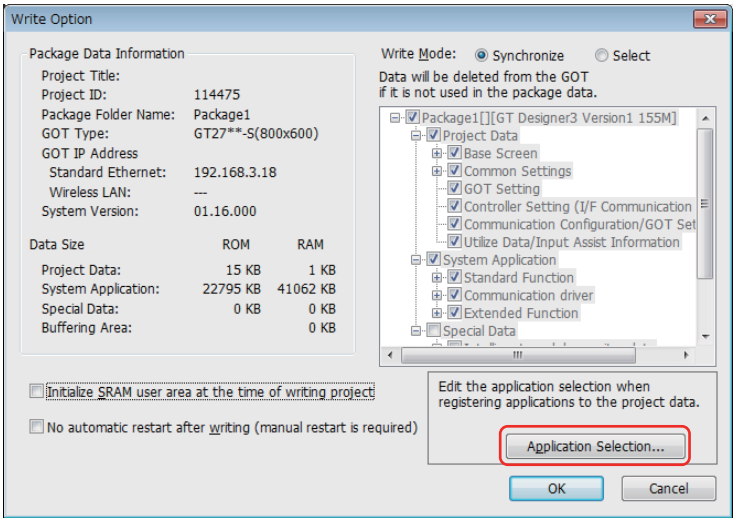

(Note) If OS data and project data (drawing data) are larger than the capacity of built-in flash memory, select "A: Standard SD card" for "Drive" to store the project data in an SD card.

Confirm that a SD card is inserted on the GOT rear slot when selecting "A: Standard SD card".

Point :

The extended function used for creating the project data will be written automatically.

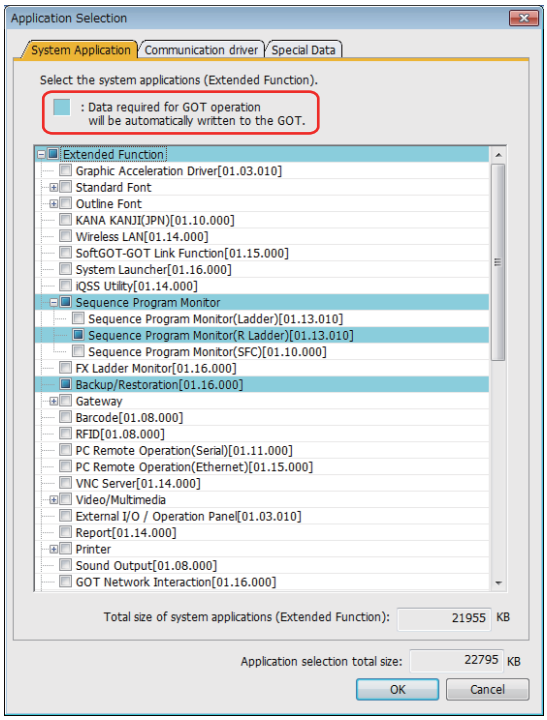

10

PLC CPU Initial Setup

10.1 GX Works3

10.1.1 Connecting the Devices Necessary for Setup

Connect the personal computer in which the sequence program development/maintenance tool GX Works3 is installed to the PLC CPU with USB.

RCPU (The explanation is an example using R04CPU.)

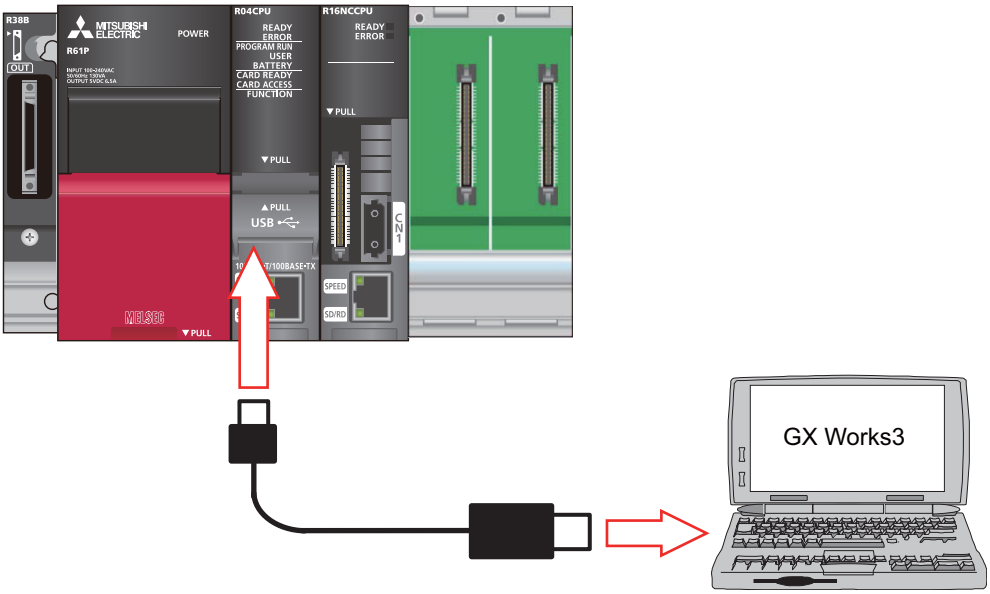

(Note 1) When connecting to a personal computer and a unit with the USB interface, an electric shock or a unit failure may occur.
Be sure to refer to "Items related to connection" on "Precautions for Safety" before connecting them.

10.1.2 Setting the Connection to GX Works3

In order to setup GX Works3 and PLC CPU, it is necessary to open a project on GX Works3.

(1) Turn ON the PLC CPU.

Start GX Works3, and select [New] from the [Project] menu.

If a project is already created, open it. ([Project]-->[Open])

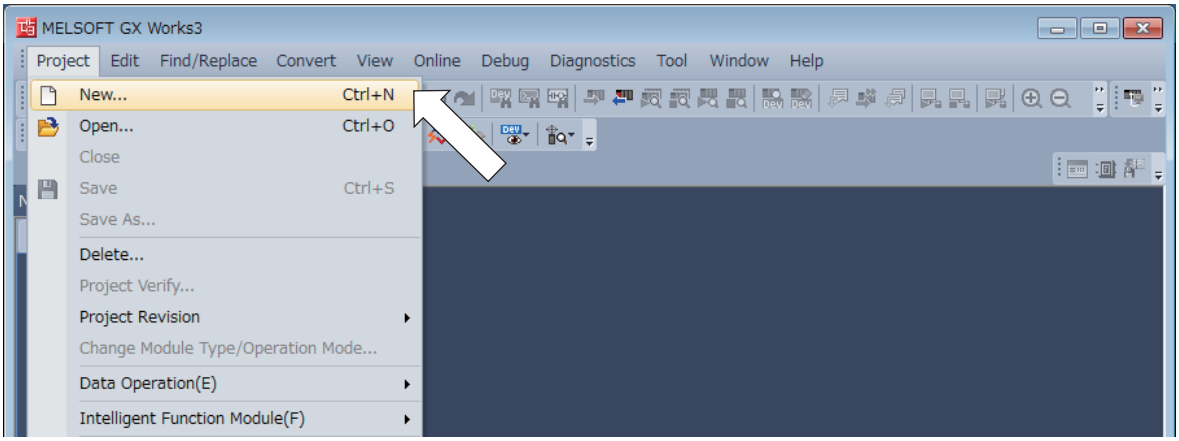

(2) When [New] is selected, the "New" dialogue box will appear.

Select "RCPU" for "Series" and a PLC CPU type to connect for "Type" and then click [OK].

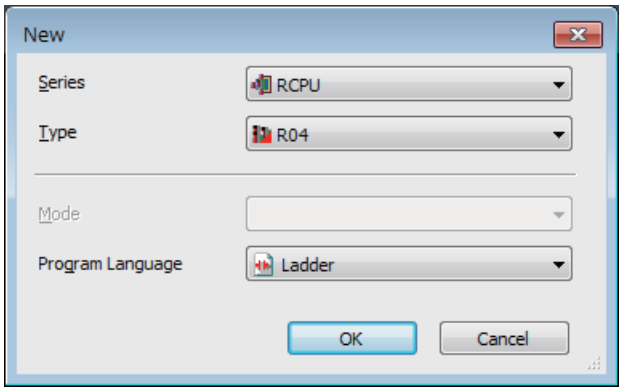

(3) After selecting the "Connection Destination" in the Connection Destination window, double click "Connection" of "Current Connection Destination".

(4) On the "Specify Connection Destination" screen, set the following items:
"Serial USB" for "PC side I/F"
"PLC Module" for "PLC side I/F"
"No Specification" of "Other Station Setting"
"Multi CPU Setting1 (Target PLC No.1)" of "Target System"

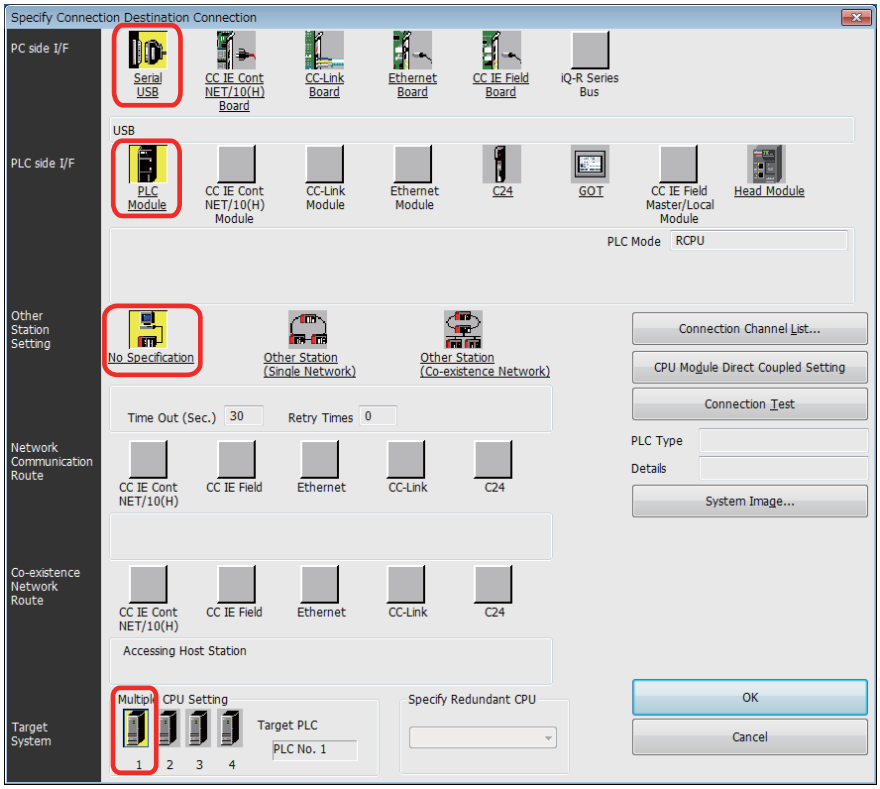

(5) Click "Connection Test" to execute the test.
After confirming the message "Successfully connected", click "OK".
Click "OK" of the "Specify Connection Destination" screen, and close the window.

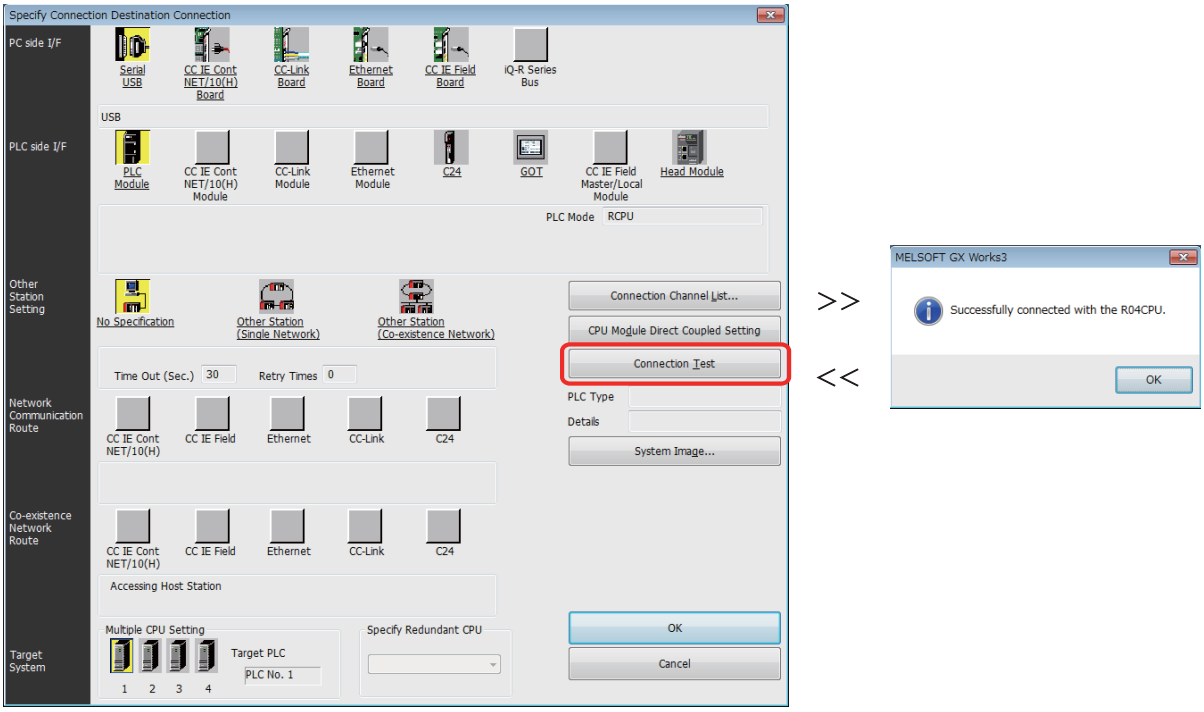

10.1.3 Setting Multi-CPU Parameters

(1) Double click [Module Configuration] from the project of the navigation window to display the unit configuration drawing dialog.

(2) Select [On line]-[Read Module Configuration from PLC] from the menu.
The module configuration diagram appears, which is configured with the same components (objects) as the actual system.

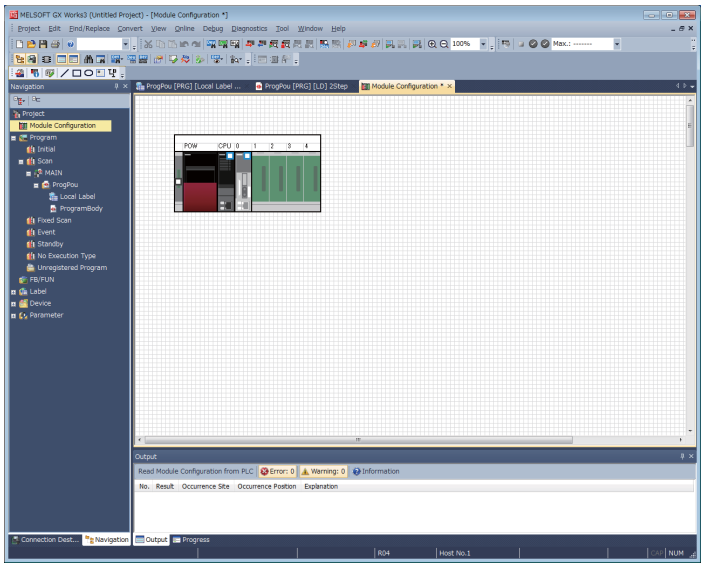

(3) Double click [Parameter]-[R04CPU]-[CPU Parameter] in the navigation window and select "Yes" in the displayed dialog box.

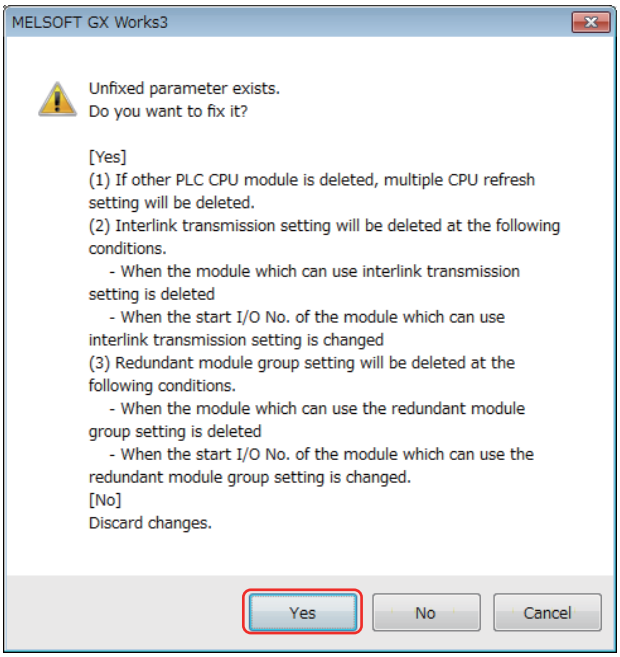

(4) Click [File Setting] in the displayed "R04CPU CPU Parameter" dialog.

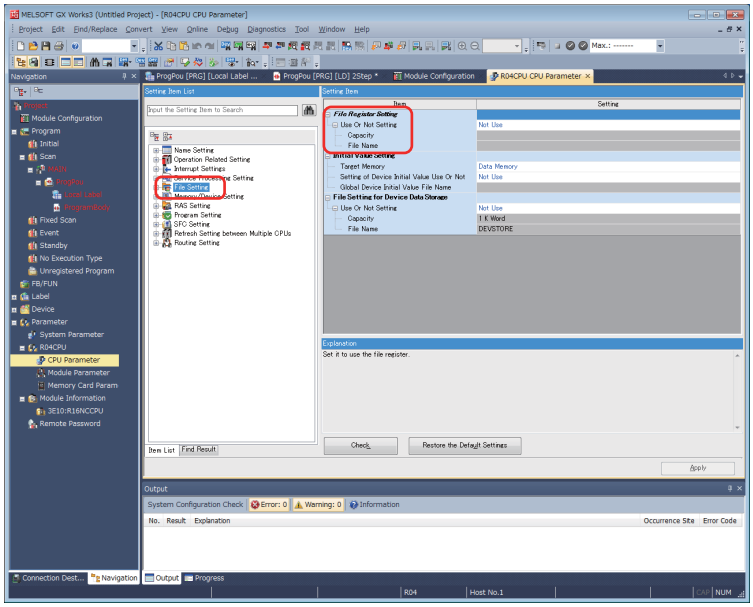

(5) Set the following values to each item of "File Register Setting".

Use Or Not Setting: "Use Common File Register in All Programs"

Capacity: (The setting value varies depending on the number of CNC CPUs to be connected.)

: "32" (32K Word) … When connecting one unit of CNC CPU

: "64" (64K Word) … When connecting two units of CNC CPU

: "96" (96K Word) … When connecting three units of CNC CPU

File Name: "MAIN"

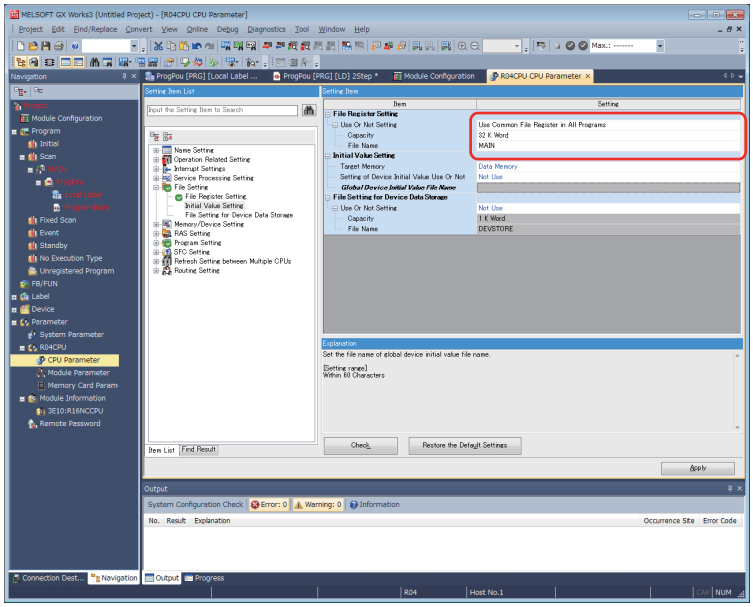

(6) When connecting two units of CNC CPU, perform the following setting.

(a) Set <Detailed Setting> under "Memory/Device setting" - "Device/Label Memory Area Setting" - "Device/Label Memory Area Detailed Setting" - "Device Setting".

Link relay B: "24" (24K Word)

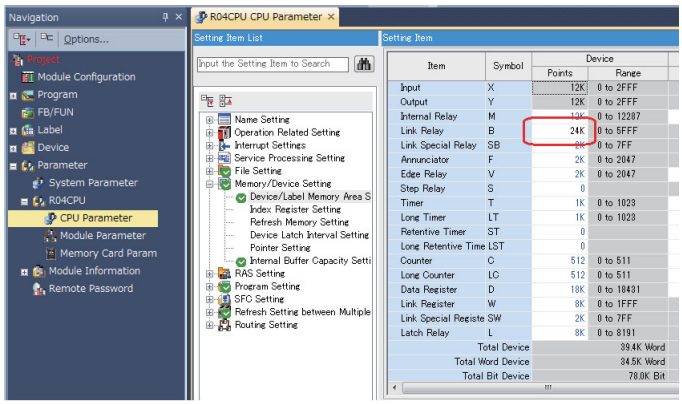

(7) When connecting three units of CNC CPU, perform the following setting.

(a) Set "Device/Label Memory Area Capacity Setting" under "CPU Parameter" - "Memory/Device Setting" - "Device/Label Memory Area Setting".

Device Area Capacity under "Device Area": "48" (48K Word)

File Storage Area Capacity under "Label Area": "120" (120K Word)

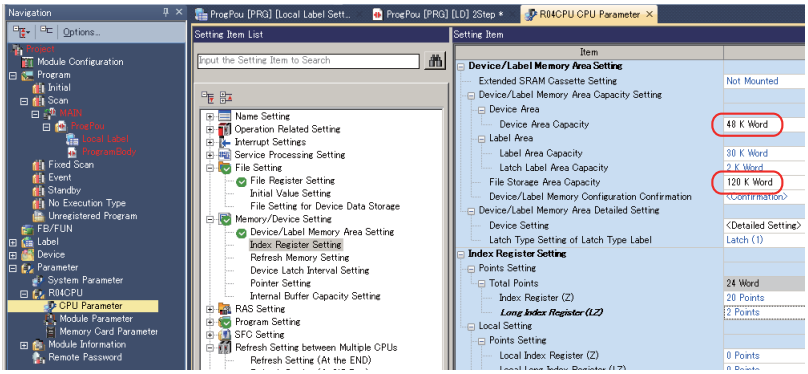

(b) Set <Detailed Setting> under "Memory/Device setting" - "Device/Label Memory Area Setting" - "Device/Label Memory Area Detailed Setting" - "Device Setting".

Link relay B: "32" (32K Word)

Data register D: "26" (26K Word)

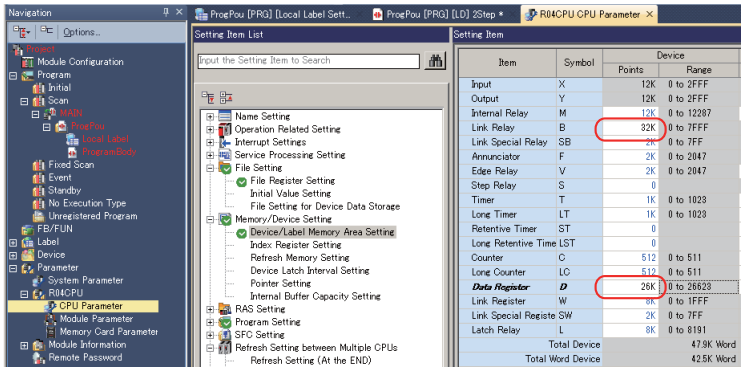

(8) Click [Apply].

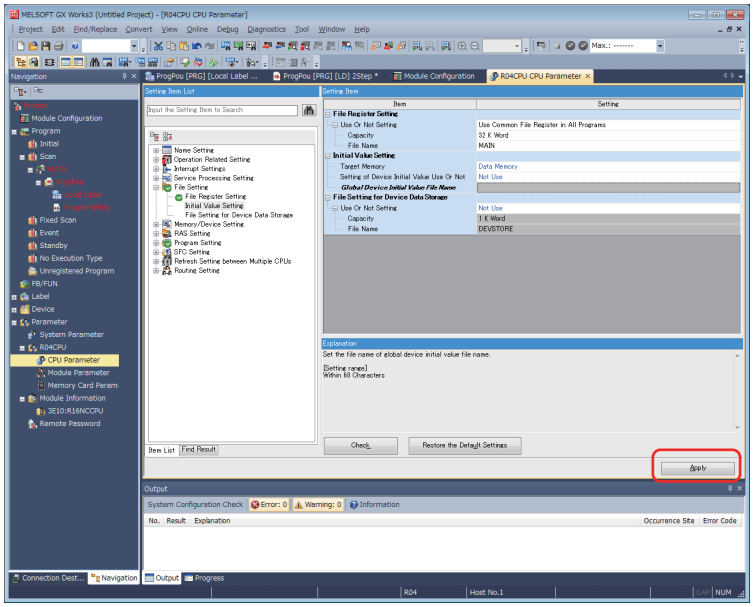

(9) When the following message box appears, click [Yes].

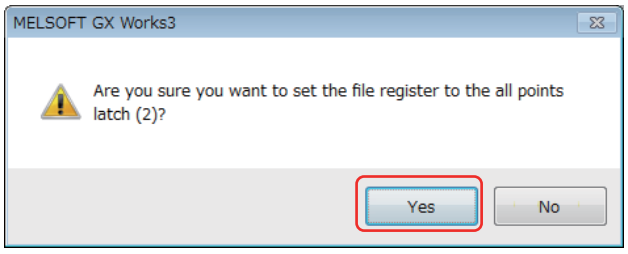

(10) When double clicking the <Detailed Setting> of "Refresh Setting between Multiple CPUs" - "Refresh Setting (At the END)", a dialog to set the refresh of the CPU mounted on the base.

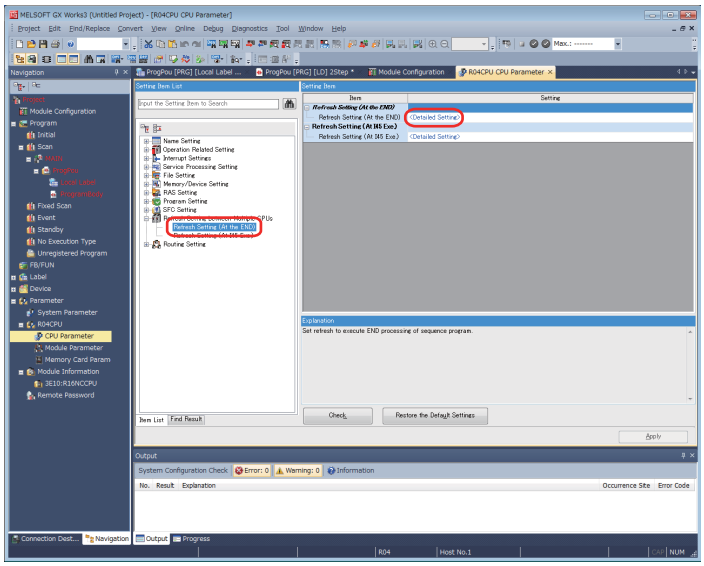

(11) Click the plus sign [+] in front of "No. 1 (Send)" to set the refresh for CPU No.1.

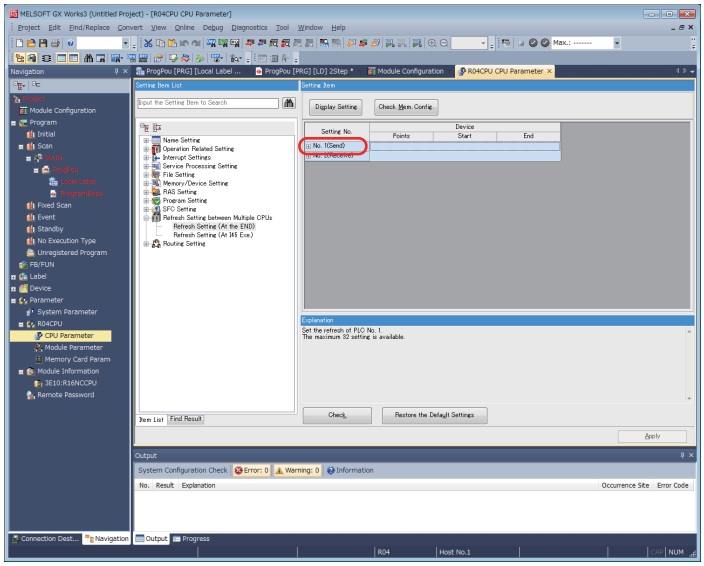

[When connecting one unit of CNC CPU]

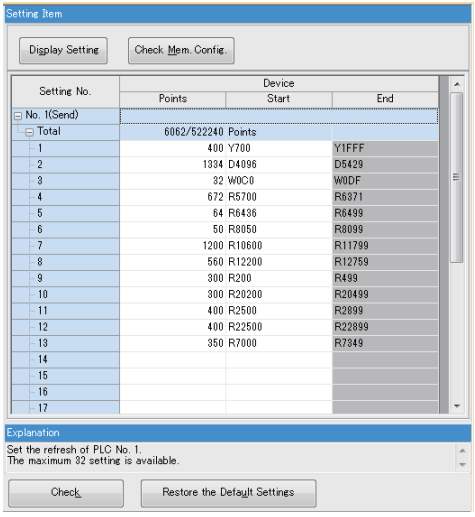

Detail Settings

Setting example 1

Points	Start
400	Y700
1334	D4096
32	W0C0
672	R5700
64	R6436
50	R8050
1200	R10600
560	R12200
300	R200
300	R20200
400	R2500
400	R22500
350	R7000

Setting example 2

Points	Start
400	Y700
1334	D4096
32	W0C0
672	R5700
64	R6436
50	R8050
20	R10600
560	R12200
300	R200
300	R20200
400	R2500
400	R22500
350	R7000
4	R10695

[Setting example 1] Setting example of one unit of CNC CPU, 2-part system and eight control axes
[Setting example 2] Setting example when using [Setup] - [T-reg] screen under the condition of setting example 1

[When connecting two units of CNC CPU]

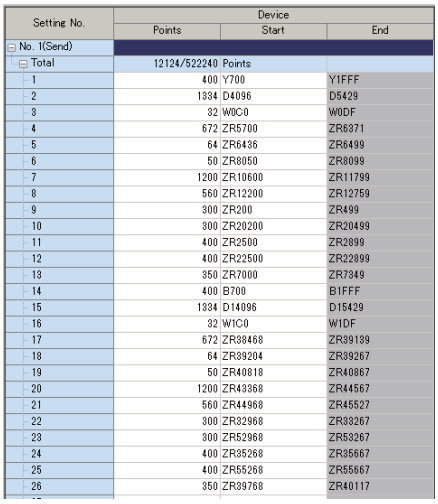

Detail Settings

Points	Start
400	Y700
1334	D4096
32	W0C0
672	ZR5700
64	ZR6436
50	ZR8050
1200	ZR10600
560	ZR12200
300	ZR200
300	ZR20200
400	ZR2500
400	ZR22500
350	ZR7000
400	B700
1334	D14096
32	W1C0
672	ZR38468
64	ZR39204
50	ZR40818
1200	ZR43368
560	ZR44968
300	ZR32968
300	ZR52968
400	ZR35268
400	ZR55268
350	ZR39768

(Note) The setting value for CPU No. 1 is the setting example for two units of CNC CPU, 2-part system and eight control axes.

[When connecting three units of CNC CPU]

Setting No.	Device		
	Points	Start	End
⊟ No. 1(Send)			
⊟ Total	28236/522240	Points	
1	400	Y700	Y1FFF
2	1334	D4096	D5429
3	32	W0C0	W0DF
4	672	ZR5700	ZR6371
5	64	ZR6436	ZR6499
6	50	ZR8050	ZR8099
7	1200	ZR10600	ZR11799
8	560	ZR12200	ZR12759
9	5100	ZR20000	ZR25099
10	400	B700	B1FFF
11	1334	D14096	D15429
12	32	W1C0	W1DF
13	672	ZR38468	ZR39139
14	64	ZR39204	ZR39267
15	50	ZR40818	ZR40867
16	1200	ZR43368	ZR44567
17	560	ZR44968	ZR45527
18	5100	ZR52768	ZR57867
19	400	B2700	B3FFF
20	1334	D24096	D25429
21	32	W2C0	W2DF
22	672	ZR71236	ZR71907
23	64	ZR71972	ZR72035
24	50	ZR73586	ZR73635
25	1200	ZR76136	ZR77335
26	560	ZR77736	ZR78295
27	5100	ZR85536	ZR90635

Detail Settings

Points	Start
400	Y700
1334	D4096
32	W0C0
672	ZR5700
64	ZR6436
50	ZR8050
1200	ZR10600
560	ZR12200
5100	ZR20000
400	B700
1334	D14096
32	W1C0
672	ZR38468
64	ZR39204
50	ZR40818
1200	ZR43368
560	ZR44968
5100	ZR52768
400	B2700
1334	D24096
32	W2C0
672	ZR71236
64	ZR71972
50	ZR73586
1200	ZR76136
560	ZR77736
5100	ZR85536

(Note) The setting value for CPU No. 1 is the setting example for three units of CNC CPU, 2-part system and eight control axes.

(12) Click [+] in front of the "No. 2 (Receive)" to set the refresh for No.2.
When connecting two units of CNC CPU, set the refresh for CPU No. 3, and when connecting three units of CNC CPU, set the refresh for CPU No. 4.

[When connecting one unit of CNC CPU]

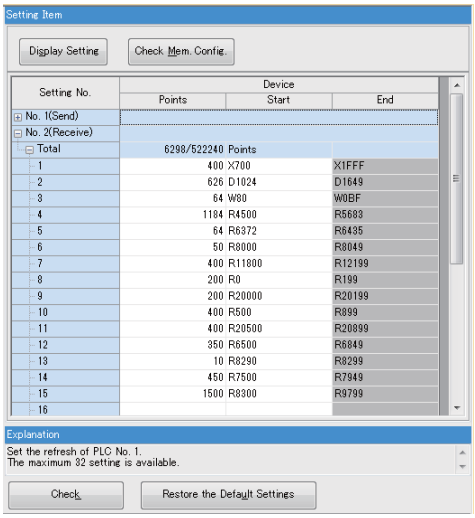

Detail Settings

Points	Start
400	X700
626	D1024
64	W80
1184	R4500
64	R6372
50	R8000
400	R11800
200	R0
200	R20000
400	R500
400	R20500
350	R6500
10	R8290
450	R7500
1500	R8300

(Note) The setting for CPU No. 2 above is an example of when the system has one CNC CPU, two part systems and eight control axes.

[When connecting two units of CNC CPU]

- Refresh setting for CPU No. 2

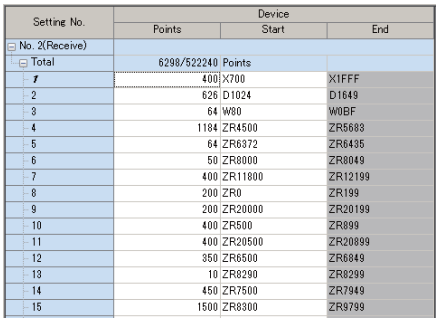

Detail Settings

Points	Start
400	X700
626	D1024
64	W80
1184	ZR4500
64	ZR6372
50	ZR8000
400	ZR11800
200	ZR0
200	ZR20000
400	ZR500
400	ZR20500
350	ZR6500
10	ZR8290
450	ZR7500
1500	ZR8300

(Note) The setting value for CPU No. 2 is the setting example for two units of CNC CPU, 2-part system and eight control axes.

- Refresh setting for CPU No. 3

Setting No.	Device		
	Points	Start	End
No. 3(Receive)			
Total	6298/522240	Points	
1	400	B4700	B5FFF
2	626	D11024	D11649
3	64	W180	W1BF
4	1184	ZR37268	ZR38451
5	64	ZR39140	ZR39203
6	50	ZR40768	ZR40817
7	400	ZR44568	ZR44967
8	200	ZR32768	ZR32967
9	200	ZR52768	ZR52967
10	400	ZR33268	ZR33667
11	400	ZR53268	ZR53667
12	350	ZR39268	ZR39617
13	10	ZR41058	ZR41067
14	450	ZR40268	ZR40717
15	1500	ZR41068	ZR42567
16			

Detail Settings

Points	Start
400	B4700
626	D11024
64	W180
1184	ZR37268
64	ZR39140
50	ZR40768
400	ZR44568
200	ZR32768
200	ZR52768
400	ZR33268
400	ZR53268
350	ZR39268
10	ZR41058
450	ZR40268
1500	ZR41068

(Note) The setting value for CPU No. 3 is the setting example for two units of CNC CPU, 2-part system and eight control axes.

[When connecting three units of CNC CPU]

- Refresh setting for CPU No. 2

Setting No.	Device		
	Points	Start	End
No. 2(Receive)			
Total	9648/522240	Points	
1	400	X700	X1FFF
2	626	D1024	D1649
3	64	W80	W0BF
4	1184	ZR4500	ZR5683
5	64	ZR6372	ZR6435
6	50	ZR8000	ZR8049
7	400	ZR11800	ZR12199
8	6860	ZR13000	ZR19859

Detail Settings

Points	Start
400	X700
626	D1024
64	W80
1184	ZR4500
64	ZR6372
50	ZR8000
400	ZR11800
6860	ZR13000

(Note) The setting value for CPU No. 2 is the setting example for three units of CNC CPU, 2-part system and eight control axes.

- Refresh setting for CPU No. 3

Setting No.	Device		
	Points	Start	End
No. 3(Receive)			
Total	9648/522240	Points	
1	400	B4700	B5FFF
2	626	D11024	D11649
3	64	W180	W1BF
4	1184	ZR37268	ZR38451
5	64	ZR39140	ZR39203
6	50	ZR40768	ZR40817
7	400	ZR44568	ZR44967
8	6860	ZR45768	ZR52627

Detail Settings

Points	Start
400	B4700
626	D11024
64	W180
1184	ZR37268
64	ZR39140
50	ZR40768
400	ZR44568
6860	ZR45768

(Note) The setting value for CPU No. 3 is the setting example for three units of CNC CPU, 2-part system and eight control axes.

- Refresh setting for CPU No. 4

Setting No.	Device		
	Points	Start	End
No. 4(Receive)			
Total	9648/522240	Points	
1	400	B6700	B7FFF
2	626	D21024	D21649
3	64	W280	W2BF
4	1184	ZR70036	ZR71219
5	64	ZR71908	ZR71971
6	50	ZR73536	ZR73585
7	400	ZR77336	ZR77735
8	6860	ZR78536	ZR85395

Detail Settings

Points	Start
400	B6700
626	D21024
64	W280
1184	ZR70036
64	ZR71908
50	ZR73536
400	ZR77336
6860	ZR78536

(Note) The setting value for CPU No. 4 is the setting example for three units of CNC CPU, 2-part system and eight control axes.

(13) Close "R04CPU CPU Parameter" screen.

(14) Double click [Param]-[System Parameter] in the navigation window and select "Multi CPU Setting" in the displayed dialog box.

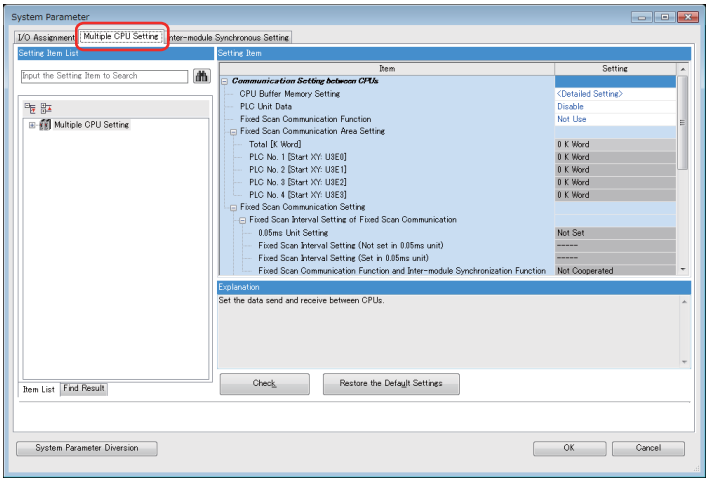

(15) Select "Communication Setting between CPUs" in the setting item, and then select "Enable" for "PLC Unit Data".

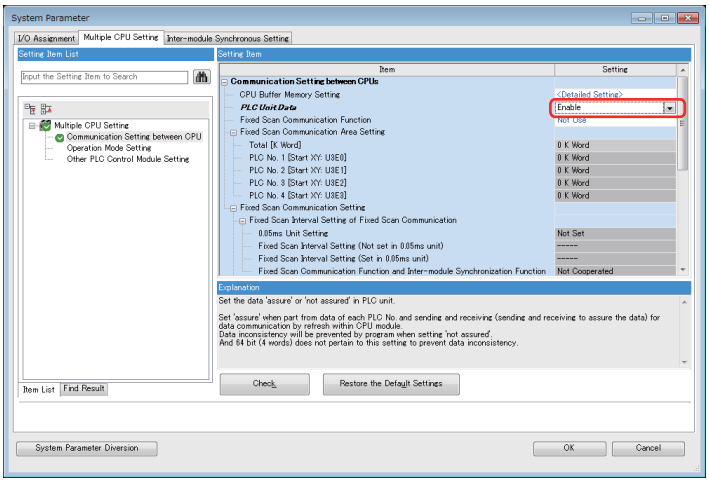

(Note) Be sure to always set "Fixed Scan Communication Function" to "Not use".

(16) Select "Operation Mode Setting" in the setting items and then set the stop setting to "Major: All Station Stop, Moderate: All Station Continue" for both No.1 and No.2 units.

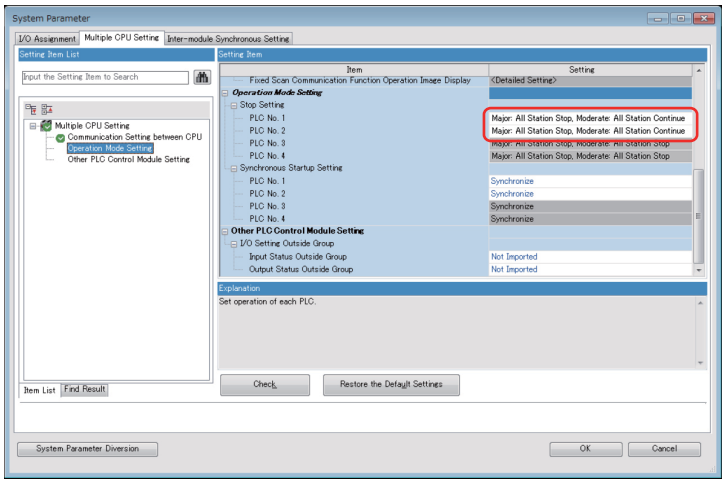

(Note) When two or more units of CNC CPU are connected, select "Major: All Station Stop, Moderate: All Station Continue" for all the CNC CPU.

(17) Select "Other PLC Control Module Setting" in the setting items, and then set "Not Imported" for "Input Status Outside Group".

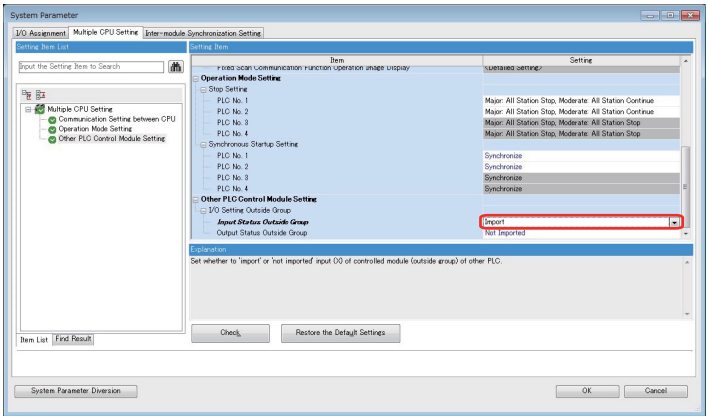

10.1.4 Writing the Created Parameters to the PLC

(1) Select [Convert]-[Rebuild All] from the menu and then click [OK] in the next dialog.

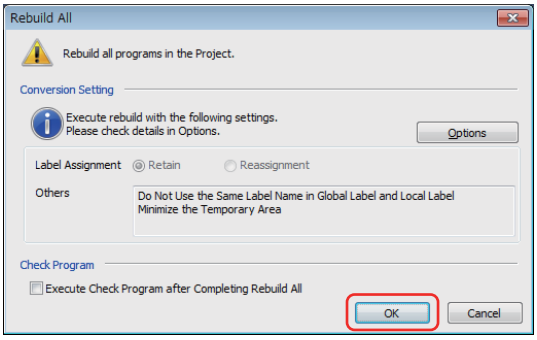

(2) When the next dialog appears, click [Yes].

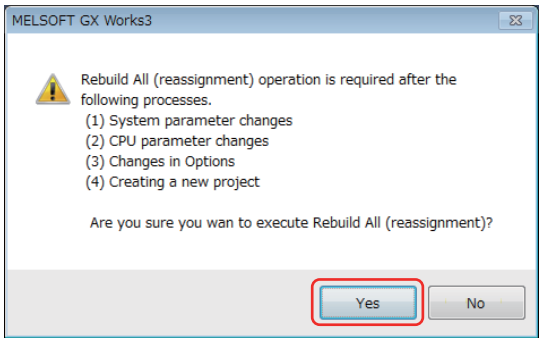

(3) Writing the setting contents in the PLC CPU.

Select [Online]-[Write to PLC] from the menu, click [Parameter + Program] in the next dialog and then click [Execute].

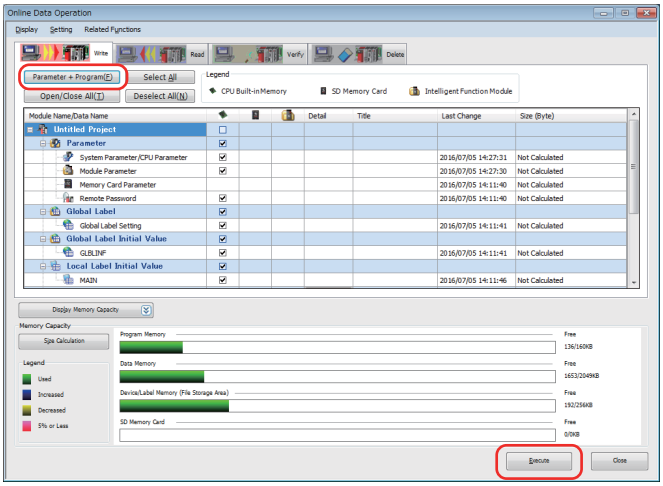

Now the PLC CPU setup has been completed.

11

CNC CPU Initial Setup

11.1 Initializing CNC CPU Internal Data (Clearing SRAM Data)

(1) With the power OFF, set the CNC CPU module's rotary switch 1 (SW1) to "7". Then turn the power ON.

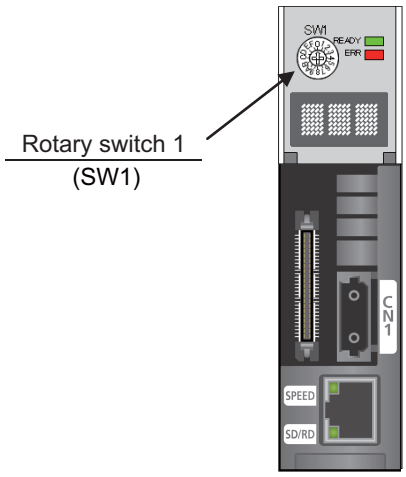

(2) When "-" is displayed on the right end of the dot matrix display, turn the power OFF.
The required time is approximately 10 seconds.

(3) Set SW1 to "C" and then turn the power ON. When "y" is displayed on the right end of the dot matrix display, turn the power OFF.
The required time is approximately 10 seconds.

(4) Set SW1 to "O". (normal setting)

(Note) By clearing the SRAM, the CNC CPU module's Ethernet is set to the following initial values.
<The default value of CNC CPU module's Ethernet>
IP address: 192.168.200.1
Subnet mask: 255.255.255.0
Gateway: 0.0.0.0

11.1.1 Loss and Restoration of Absolute Position Data

(1) Loss of Absolute Position Data

Any of the followings may result in the loss of absolute position data.
- Changing a parameter related to absolute position.
- Writing a parameter which was acquired when the zero point was in a different position.
- NC: SRAM clear
- Failure in NC absolute position data
- Servo drive: low battery or uninstallation of the battery
- Servo drive: disconnection of encoder cable

The absolute position data can be restored by Backup/Restore or SRAM data.

(2) Restoration by Backup/Restore
- Execute "Restore" with Backup/Restore.
- Turn the NC power OFF and ON.

Restoration with the GOT's Backup/Restore function restores the linear axis, but not the rotary axis. An initialization of the absolute position of the rotary axis must be performed.
The same restoration as the Backup/Restore function can be performed by writing the parameter (ALL.PRM).

Status at Restore	Absolute position established	Absolute position not established, SRAM clear
Linear axis	- Status will not change - Absolute position internal data will be updated	- Absolute position will be established - Absolute position internal data will be updated
Rotary axis	- Status will not change - Absolute position internal data will not be updated	

⚠ CAUTION

It is dangerous to restore the backup data of other machine when the absolute position is established because the zero point will be established with the absolute position of the linear axis rewritten, thus the zero point position is off the right position.
Initialize the zero point again.

(3) Restoration by SRAM data

(a) Select [Mainte] from the Screen group at the top of the CNC monitor 2 screen (GOT operation panel) and then select [Psswd input] from the menu.

(b) Enter the password for the machine parameter and then press [INPUT]. This enables the next modal output.

(c) Select [Diagn] from the Screen group at the top of the CNC monitor 2 screen (GOT operation panel).

(d) Select [I/F dia] from the menu.

(e) Select [Model output] from the menu and enter "Y709/1" in the input area to reset the data protection key 1.

(f) Select [Mainte] from the Screen group at the top of the CNC monitor 2 screen (GOT operation panel).

(g) Press the return button on the menu to switch the menu display.

(h) Select [I/O] from the menu.

(i) Select [USB memory] for "A: Dev" and then select [Dir] from the menu.

(j) Select [From list] from the menu.

(k) Select "SRAM.BIN" displayed in the program list on the left.

(l) Press [INPUT] twice continuously.

(m) Select [Memory] for "B: Dev", select [Dir] from the menu and then enter "/DAT" in the input area.

(n) Select [Trnsfr A->B] from the menu and enter "Y" according to the displayed message.
When the message changed "Now, transferring data" to "Transfer completed", the restoration is completed.

(o) Turn the power OFF and ON.

⚠ CAUTION

Restoration by SRAM data is available only if the rotary axis motor has not rotated in a same direction 30,000 times or more since the acquisition of the data.
Otherwise, the zero point of the rotary axis will change by turning the power OFF and ON after writing the SRAM data, which will cause danger. Make sure the zero point is not off the right position.
The use of this method should be limited to when necessary, such as when replacing an NC unit, and requires enough safety confirmation before executing.

(Note) If "Z70 Abs posn error 0101" occurs, execute SRAM clear and data restoration or initialize the zero point.

(4) Correspondence between absolute position data and parameters

Correspondence between absolute position data and I/O parameter #10000s is shown below.

#	Name	Description	Timing of Updating
10001	absfint	Absolute position setting completed I/O tempo	When the power is turned OFF and ON after changing a parameter related to absolute position detection.
10002	SV077	E0 The absolute position error saved when the basic position was set.	When the status changes to "Completed" during the initialization procedure.
10003	SV078	R0 The multi-rotation counter value of the encoder saved when the basic point was set.	
10004	SV079	P0 The position in one rotation of the encoder saved when the basic point was set.	
10005	SV080	P0 The position in one rotation of the encoder saved when the basic point was set.	
10006	absg	The distance from the machine basic position to the first grid point (cunit unit).	
10007	abssum1	SV077 ― SV080 Checksum (:absn abs1x absg)	
10008	abseor1	SV077 ― SV080 EOR (:absn abs1x absg)	
10009	abssum2	Parameter checksum	
10010	abseor2	Parameter EOR	
10011	absbase	Zero point (micro) (cunit unit)	The value in the #2 "Zero point" of [Mainte] - [Absolute Position Setting] screen. Updated by screen input.

11.2 Selecting NC System Type and Display Language

Perform the parameter setting for the CNC CPU module from the "CNC monitor 2" of GOT.

(1) Select [Mainte] tab and then select [Param] at the bottom left.

(2) Select [Para No search] in the middle at the bottom, enter "1043" in the setting area and then press [INPUT] key.
Enter the password for the machine parameter and then press [INPUT].
(Note 1) When entering "A", press the shift key before pressing [A]. Do not press both keys at the same time.
(Note 2) The password will be displayed as "*****".

(3) Set the language No. ("1" for Japanese) you desired to display in the setting area of "#1043" and then press [INPUT].

(4) Select [Para No search], enter "1163" in the setting area and then press [INPUT].

(5) The cursor will move to the "#1163 No rio (RIO connection detection invalid)".

(6) Enter "1" in the setting area and press [INPUT]. (0: valid, 1: invalid)

(7) Select [Para No search], enter "26750" in the setting area and then press [INPUT] key.

(8) Enter "2" (for CPU: 2 units) in the setting area and then press [INPUT] key.

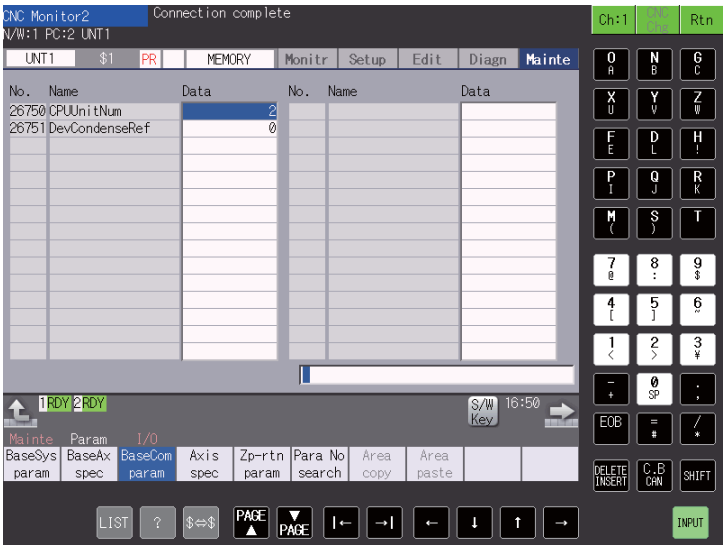

(9) When the type of the NC system is Lathe system, perform (a) and (b) below.

(a) Select [Para No search], enter "1007" in the setting area and then press [INPUT] key.
The screen will move to the basic system parameter screen and the cursor will move to the "#1007 System type select".

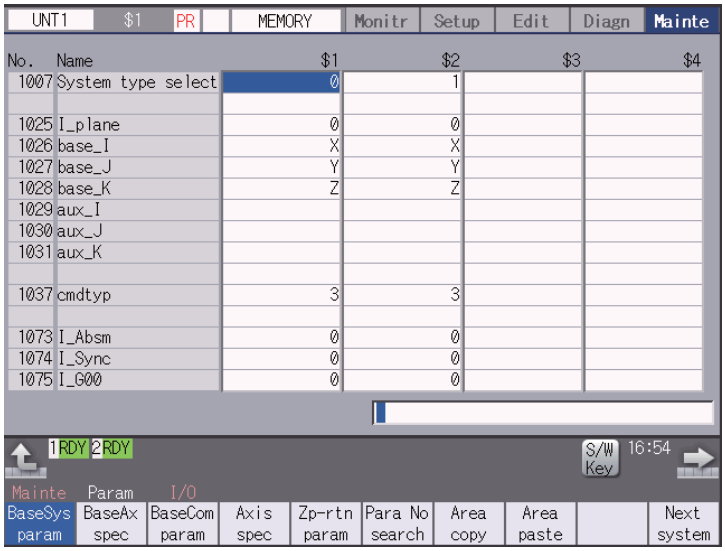

(b) Enter "1" in the setting area and press [INPUT]. (0: Machining center system, 1: Lathe system)

(10) Turn the power OFF and ON.

11.3 Setting Multi-CPU Parameters

[Outline drawing of Multi-CPU parameter setting]

(Note 1) This outline drawing is for the system configuration for PLC CPU (one unit) and CNC CPU (up to three units).
(Note 2) When the number of CNC CPUs is less than three, the setting of CNC CPU which does not exist is set to "vacant".

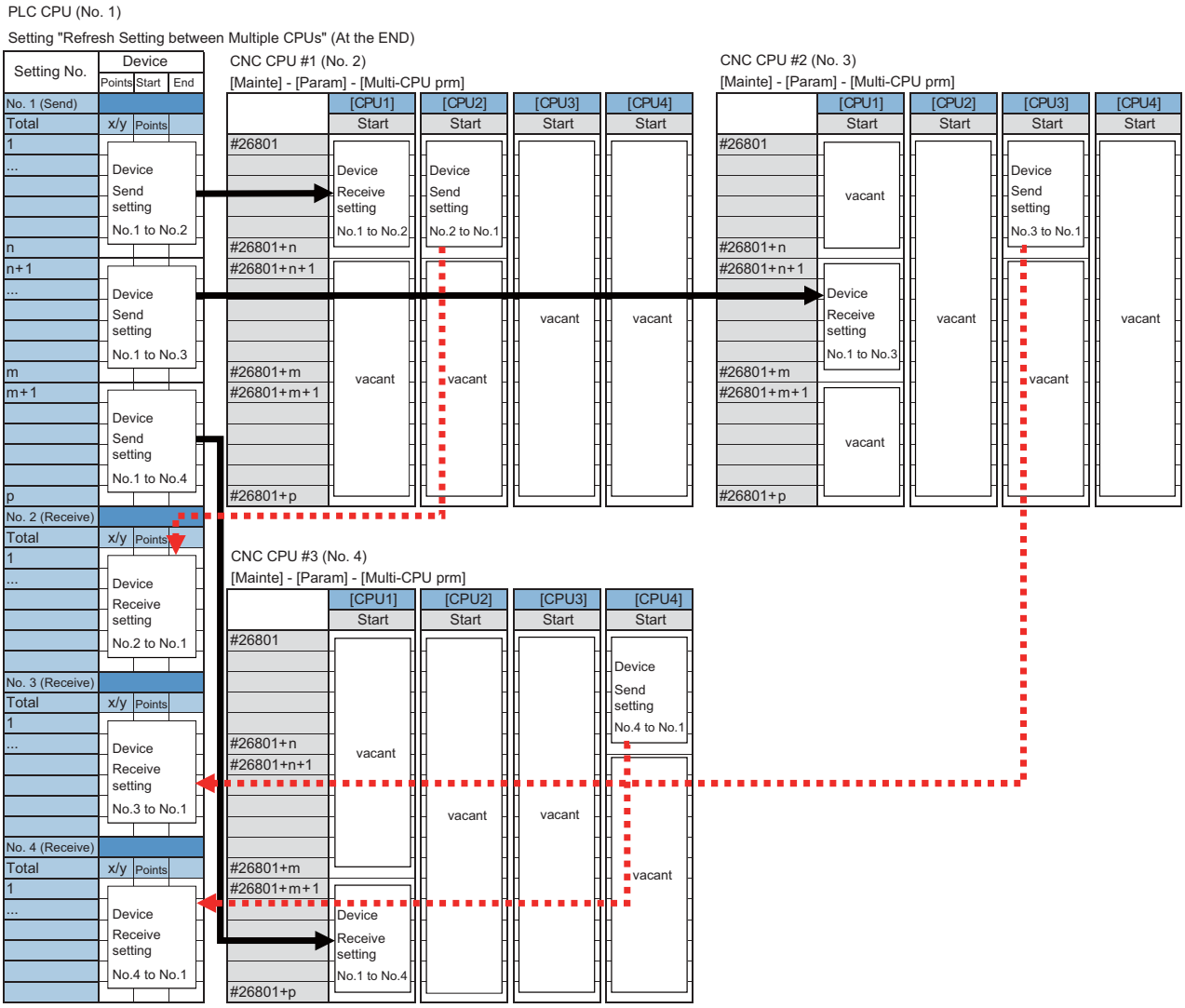

(1) Select [Mainte] tab and select [Mainte] at the bottom left.

(2) Select [Psswd input] at the bottom left.
Enter the password for the machine parameter and then press [INPUT].
(Note 1) When entering "A", press the shift key before pressing [A]. Do not press both keys at the same time.
(Note 2) The password will be displayed as "*****".

(3) Select [Param] at the bottom left.

(4) Select [Para No search] in the middle at the bottom, enter "26801" in the setting area and then press [INPUT] key.

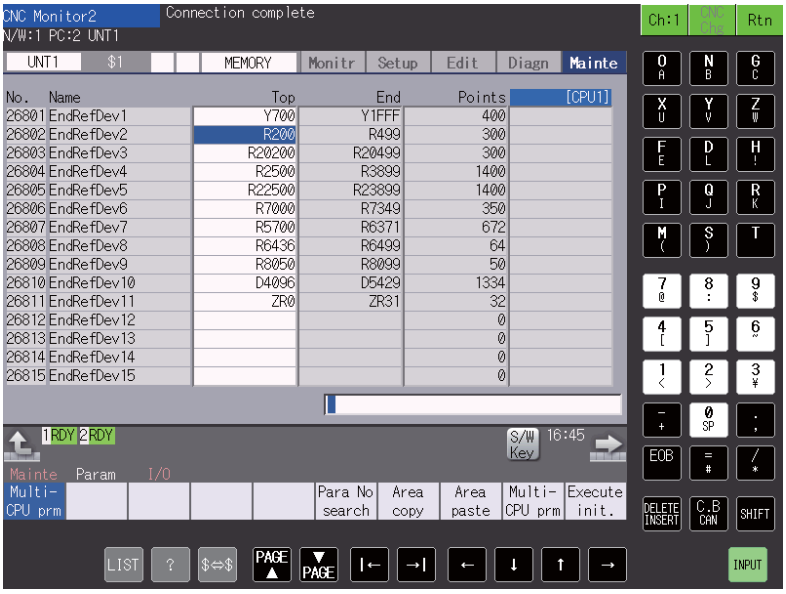

(5) Perform the device setting on CPU side.

[When connecting one unit of CNC CPU]

(Note) When the [Execute init.] menu is pressed at NC1, the settings for (a) to (b) are performed automatically.
The setting of [Setting example 1] is applied to (a).

(a) Make the device setting on the CPU1 side.

[Setting example 1]
CPU1 (PLC CPU side)… an example of one unit of CNC CPU, 2-part system and 8 control axes

No.	Name	Top	End	Points	[CPU1]
26801	EndRefDev1	Y700	Y1FFF	400	
26802	EndRefDev2	D4096	D5429	1334	
26803	EndRefDev3	ZR672	ZR703	32	
26804	EndRefDev4	R5700	R6371	672	
26805	EndRefDev5	R6436	R6499	64	
26806	EndRefDev6	R8050	R8099	50	
26807	EndRefDev7	R10600	R11799	1200	
26808	EndRefDev8	R12200	R12759	560	
26809	EndRefDev9	R200	R499	300	
26810	EndRefDev10	R20200	R20499	300	
26811	EndRefDev11	R2500	R2899	400	
26812	EndRefDev12	R22500	R22899	400	
26813	EndRefDev13	R7000	R7349	350	
26814	EndRefDev14			0	
26815	EndRefDev15			0	

[Setting example 2]
Setting example when using [Setup] - [T-reg] screen under the condition of setting example 1

No.	Name	Top	End	Points	[CPU1]
26801	EndRefDev1	Y700	Y1FFF	400	
26802	EndRefDev2	D4096	D5429	1334	
26803	EndRefDev3	ZR672	ZR703	32	
26804	EndRefDev4	R5700	R6371	672	
26805	EndRefDev5	R6436	R6499	64	
26806	EndRefDev6	R8050	R8099	50	
26807	EndRefDev7	R10600	R10619	20	
26808	EndRefDev8	R12200	R12759	560	
26809	EndRefDev9	R200	R499	300	
26810	EndRefDev10	R20200	R20499	300	
26811	EndRefDev11	R2500	R2899	400	
26812	EndRefDev12	R22500	R22899	400	
26813	EndRefDev13	R7000	R7349	350	
26814	EndRefDev14	R10695	R10698	4	
26815	EndRefDev15			0	

(b) Make the device setting on the CPU2 side.

Press [Next CPU] at the bottom right. Confirm that [CPU2] is displayed in the top right.

CPU2 (CNC CPU side)… an example of one unit of CNC CPU, 2-part system and 8 control axes

No.	Name	Top	End	Points	[CPU2]
26801	EndRefDev1	X700	X1FFF	400	
26802	EndRefDev2	D1024	D1649	626	
26803	EndRefDev3	ZR2688	ZR2751	64	
26804	EndRefDev4	R4500	R5683	1184	
26805	EndRefDev5	R6372	R6435	64	
26806	EndRefDev6	R8000	R8049	50	
26807	EndRefDev7	R11800	R12199	400	
26808	EndRefDev8	R0	R199	200	
26809	EndRefDev9	R20000	R20199	200	
26810	EndRefDev10	R500	R899	400	
26811	EndRefDev11	R20500	R20899	400	
26812	EndRefDev12	R6500	R6849	350	
26813	EndRefDev13	R8290	R8299	10	
26814	EndRefDev14	R7500	R7949	450	
26815	EndRefDev15	R8300	R9799	1500	

[When connecting two units of CNC CPU]

(a) Device setting of NC1

(Note) When the [Execute init.] menu is pressed at NC1, the settings for (a-1) to (a-3) are performed automatically.

(a-1) Perform the device setting on CPU1 side of NC1.

CPU1 (PLC CPU side): Setting example of two units of CNC CPU, 2-part system and 8 control axes

No.	Name	Top	End	Points	[CPU1]
26801	EndRefDev1	Y700	Y1FFF	400	
26802	EndRefDev2	D4096	D5429	1334	
26803	EndRefDev3	ZR672	ZR703	32	
26804	EndRefDev4	R5700	R6371	672	
26805	EndRefDev5	R6436	R6499	64	
26806	EndRefDev6	R8050	R8099	50	
26807	EndRefDev7	R10600	R11799	1200	
26808	EndRefDev8	R12200	R12759	560	
26809	EndRefDev9	R200	R499	300	
26810	EndRefDev10	R20200	R20499	300	
26811	EndRefDev11	R2500	R2899	400	
26812	EndRefDev12	R22500	R22899	400	
26813	EndRefDev13	R7000	R7349	350	
26814	EndRefDev14			400	
26815	EndRefDev15			1334	

No.	Name	Top	End	Points	[CPU1]
26816	EndRefDev16			32	
26817	EndRefDev17			672	
26818	EndRefDev18			64	
26819	EndRefDev19			50	
26820	EndRefDev20			1200	
26821	EndRefDev21			560	
26822	EndRefDev22			300	
26823	EndRefDev23			300	
26824	EndRefDev24			400	
26825	EndRefDev25			400	
26826	EndRefDev26			350	
26827	EndRefDev27			0	
26828	EndRefDev28			0	
26829	EndRefDev29			0	
26830	EndRefDev30			0	

(a-2) Perform the device setting on CPU2 side of NC1.

Press [Next CPU] at the bottom right. Confirm that [CPU2] is displayed in the top right.

CPU2 (CNC CPU side): Setting example of two units of CNC CPU, 2-part system and 8 control axes

No.	Name	Top	End	Points	[CPU2]
26801	EndRefDev1	X700	X1FFF	400	
26802	EndRefDev2	D1024	D1649	626	
26803	EndRefDev3	ZR2688	ZR2751	64	
26804	EndRefDev4	R4500	R5683	1184	
26805	EndRefDev5	R6372	R6435	64	
26806	EndRefDev6	R8000	R8049	50	
26807	EndRefDev7	R11800	R12199	400	
26808	EndRefDev8	R0	R199	200	
26809	EndRefDev9	R20000	R20199	200	
26810	EndRefDev10	R500	R899	400	
26811	EndRefDev11	R20500	R20899	400	
26812	EndRefDev12	R6500	R6849	350	
26813	EndRefDev13	R8290	R8299	10	
26814	EndRefDev14	R7500	R7949	450	
26815	EndRefDev15	R8300	R9799	1500	

No.	Name	Top	End	Points	[CPU2]
26816	EndRefDev16			0	
26817	EndRefDev17			0	
26818	EndRefDev18			0	
26819	EndRefDev19			0	
26820	EndRefDev20			0	
26821	EndRefDev21			0	
26822	EndRefDev22			0	
26823	EndRefDev23			0	
26824	EndRefDev24			0	
26825	EndRefDev25			0	
26826	EndRefDev26			0	
26827	EndRefDev27			0	
26828	EndRefDev28			0	
26829	EndRefDev29			0	
26830	EndRefDev30			0	

(a-3) Perform the device setting on CPU3 side of NC1.

Press [Next CPU] at the bottom right. Confirm that [CPU3] is displayed in the top right.

CPU3 (CNC CPU side): Setting example of two units of CNC CPU, 2-part system and 8 control axes

No.	Name	Top	End	Points	[CPU3]
26801	EndRefDev1			400	
26802	EndRefDev2			626	
26803	EndRefDev3			64	
26804	EndRefDev4			1184	
26805	EndRefDev5			64	
26806	EndRefDev6			50	
26807	EndRefDev7			400	
26808	EndRefDev8			200	
26809	EndRefDev9			200	
26810	EndRefDev10			400	
26811	EndRefDev11			400	
26812	EndRefDev12			350	
26813	EndRefDev13			10	
26814	EndRefDev14			450	
26815	EndRefDev15			1500	

No.	Name	Top	End	Points	[CPU3]
26816	EndRefDev16			0	
26817	EndRefDev17			0	
26818	EndRefDev18			0	
26819	EndRefDev19			0	
26820	EndRefDev20			0	
26821	EndRefDev21			0	
26822	EndRefDev22			0	
26823	EndRefDev23			0	
26824	EndRefDev24			0	
26825	EndRefDev25			0	
26826	EndRefDev26			0	
26827	EndRefDev27			0	
26828	EndRefDev28			0	
26829	EndRefDev29			0	
26830	EndRefDev30			0	

(b) Device setting of NC2

(Note) When the [Execute init.] menu is pressed at NC1, the settings for (b-1) to (b-3) are performed automatically.

(b-1) Perform the device setting on CPU1 side of NC2.

CPU1 (PLC CPU side): Setting example of two units of CNC CPU, 2-part system and 8 control axes

No.	Name	Top	End	Points	[CPU1]
26801	EndRefDev1			400	
26802	EndRefDev2			1334	
26803	EndRefDev3			32	
26804	EndRefDev4			672	
26805	EndRefDev5			64	
26806	EndRefDev6			50	
26807	EndRefDev7			1200	
26808	EndRefDev8			560	
26809	EndRefDev9			300	
26810	EndRefDev10			300	
26811	EndRefDev11			400	
26812	EndRefDev12			400	
26813	EndRefDev13			350	
26814	EndRefDev14	Y700	Y1FFF	400	
26815	EndRefDev15	D4096	D5429	1334	

No.	Name	Top	End	Points	[CPU1]
26816	EndRefDev16	ZR672	ZR703	32	
26817	EndRefDev17	R5700	R6371	672	
26818	EndRefDev18	R6436	R6499	64	
26819	EndRefDev19	R8050	R8099	50	
26820	EndRefDev20	R10600	R11799	1200	
26821	EndRefDev21	R12200	R12759	560	
26822	EndRefDev22	R200	R499	300	
26823	EndRefDev23	R20200	R20499	300	
26824	EndRefDev24	R2500	R2899	400	
26825	EndRefDev25	R22500	R22899	400	
26826	EndRefDev26	R7000	R7349	350	
26827	EndRefDev27			0	
26828	EndRefDev28			0	
26829	EndRefDev29			0	
26830	EndRefDev30			0	

(b-2) Perform the device setting on CPU2 side of NC2.

Press [Next CPU] at the bottom right. Confirm that [CPU2] is displayed in the top right.

CPU2 (CNC CPU side): Setting example of two units of CNC CPU, 2-part system and 8 control axes

No.	Name	Top	End	Points	[CPU2]
26801	EndRefDev1			400	
26802	EndRefDev2			626	
26803	EndRefDev3			64	
26804	EndRefDev4			1184	
26805	EndRefDev5			64	
26806	EndRefDev6			50	
26807	EndRefDev7			400	
26808	EndRefDev8			200	
26809	EndRefDev9			200	
26810	EndRefDev10			400	
26811	EndRefDev11			400	
26812	EndRefDev12			350	
26813	EndRefDev13			10	
26814	EndRefDev14			450	
26815	EndRefDev15			1500	

No.	Name	Top	End	Points	[CPU2]
26816	EndRefDev16			0	
26817	EndRefDev17			0	
26818	EndRefDev18			0	
26819	EndRefDev19			0	
26820	EndRefDev20			0	
26821	EndRefDev21			0	
26822	EndRefDev22			0	
26823	EndRefDev23			0	
26824	EndRefDev24			0	
26825	EndRefDev25			0	
26826	EndRefDev26			0	
26827	EndRefDev27			0	
26828	EndRefDev28			0	
26829	EndRefDev29			0	
26830	EndRefDev30			0	

(b-3) Perform the device setting on CPU3 side of NC2.

Press [Next CPU] at the bottom right. Confirm that [CPU3] is displayed in the top right.

CPU3 (CNC CPU side): Setting example of two units of CNC CPU, 2-part system and 8 control axes

No.	Name	Top	End	Points	[CPU3]
26801	EndRefDev1	X700	X1FFF	400	
26802	EndRefDev2	D1024	D1649	626	
26803	EndRefDev3	ZR2688	ZR2751	64	
26804	EndRefDev4	R4500	R5683	1184	
26805	EndRefDev5	R6372	R6435	64	
26806	EndRefDev6	R8000	R8049	50	
26807	EndRefDev7	R11800	R12199	400	
26808	EndRefDev8	R0	R199	200	
26809	EndRefDev9	R20000	R20199	200	
26810	EndRefDev10	R500	R899	400	
26811	EndRefDev11	R20500	R20899	400	
26812	EndRefDev12	R6500	R6849	350	
26813	EndRefDev13	R8290	R8299	10	
26814	EndRefDev14	R7500	R7949	450	
26815	EndRefDev15	R8300	R9799	1500	

No.	Name	Top	End	Points	[CPU3]
26816	EndRefDev16			0	
26817	EndRefDev17			0	
26818	EndRefDev18			0	
26819	EndRefDev19			0	
26820	EndRefDev20			0	
26821	EndRefDev21			0	
26822	EndRefDev22			0	
26823	EndRefDev23			0	
26824	EndRefDev24			0	
26825	EndRefDev25			0	
26826	EndRefDev26			0	
26827	EndRefDev27			0	
26828	EndRefDev28			0	
26829	EndRefDev29			0	
26830	EndRefDev30			0	

[When connecting three units of CNC CPU]

(Note) To connect three units of CNC CPU, set "#26751 DevCondenseRef" to "1". If "1" is not set, a setting error occurs in the subsequent settings.

(a) Device setting of NC1

(Note) When the [Execute init.] menu is pressed at NC1, the settings for (a-1) to (a-4) are performed automatically.

(a-1) Perform the device setting on CPU1 side of NC1.

CPU1 (PLC CPU side): Setting example of three units of CNC CPU, 2-part system and 8 control axes

No.	Name	Top	End	Points	[CPU1]
26801	EndRefDev1	Y700	Y1FFF	400	
26802	EndRefDev2	D4096	D5429	1334	
26803	EndRefDev3	ZR672	ZR703	32	
26804	EndRefDev4	R5700	R6371	672	
26805	EndRefDev5	R6436	R6499	64	
26806	EndRefDev6	R8050	R8099	50	
26807	EndRefDev7	R10600	R11799	1200	
26808	EndRefDev8	R12200	R12759	560	
26809	EndRefDev9	RC7000	RC12099	5100	
26810	EndRefDev10			400	
26811	EndRefDev11			1334	
26812	EndRefDev12			32	
26813	EndRefDev13			672	
26814	EndRefDev14			64	
26815	EndRefDev15			50	

No.	Name	Top	End	Points	[CPU1]
26816	EndRefDev16			1200	
26817	EndRefDev17			560	
26818	EndRefDev18			5100	
26819	EndRefDev19			400	
26820	EndRefDev20			1334	
26821	EndRefDev21			32	
26822	EndRefDev22			672	
26823	EndRefDev23			64	
26824	EndRefDev24			50	
26825	EndRefDev25			1200	
26826	EndRefDev26			560	
26827	EndRefDev27			5100	
26828	EndRefDev28			0	
26829	EndRefDev29			0	
26830	EndRefDev30			0	

(a-2) Perform the device setting on CPU2 side of NC1.

Press [Next CPU] at the bottom right. Confirm that [CPU2] is displayed in the top right.

CPU2 (CNC CPU side): Setting example of three units of CNC CPU, 2-part system and 8 control axes

No.	Name	Top	End	Points	[CPU2]
26801	EndRefDev1	X700	X1FFF	400	
26802	EndRefDev2	D1024	D1649	626	
26803	EndRefDev3	ZR2688	ZR2751	64	
26804	EndRefDev4	R4500	R5683	1184	
26805	EndRefDev5	R6372	R6435	64	
26806	EndRefDev6	R8000	R8049	50	
26807	EndRefDev7	R11800	R12199	400	
26808	EndRefDev8	RC0	RC6859	6860	
26809	EndRefDev9			0	
26810	EndRefDev10			0	
26811	EndRefDev11			0	
26812	EndRefDev12			0	
26813	EndRefDev13			0	
26814	EndRefDev14			0	
26815	EndRefDev15			0	

(a-3) Perform the device setting on CPU3 side of NC1.
Press [Next CPU] at the bottom right. Confirm that [CPU3] is displayed in the top right.

CPU3 (CNC CPU side): Setting example of three units of CNC CPU, 2-part system and 8 control axes

No.	Name	Top	End	Points	[CPU3]
26801	EndRefDev1			400	
26802	EndRefDev2			626	
26803	EndRefDev3			64	
26804	EndRefDev4			1184	
26805	EndRefDev5			64	
26806	EndRefDev6			50	
26807	EndRefDev7			400	
26808	EndRefDev8			6860	
26809	EndRefDev9			0	
26810	EndRefDev10			0	
26811	EndRefDev11			0	
26812	EndRefDev12			0	
26813	EndRefDev13			0	
26814	EndRefDev14			0	
26815	EndRefDev15			0	

(a-4) Perform the device setting on CPU4 side of NC1.
Press [Next CPU] at the bottom right. Confirm that [CPU4] is displayed in the top right.

CPU4 (CNC CPU side): Setting example of three units of CNC CPU, 2-part system and 8 control axes

No.	Name	Top	End	Points	[CPU4]
26801	EndRefDev1			400	
26802	EndRefDev2			626	
26803	EndRefDev3			64	
26804	EndRefDev4			1184	
26805	EndRefDev5			64	
26806	EndRefDev6			50	
26807	EndRefDev7			400	
26808	EndRefDev8			6860	
26809	EndRefDev9			0	
26810	EndRefDev10			0	
26811	EndRefDev11			0	
26812	EndRefDev12			0	
26813	EndRefDev13			0	
26814	EndRefDev14			0	
26815	EndRefDev15			0	

(b) Device setting of NC2

(Note) When the [Execute init.] menu is pressed at NC2, the settings for (b-1) to (b-4) are performed automatically.

(b-1) Perform the device setting on CPU1 side of NC2.

CPU1 (PLC CPU side): Setting example of three units of CNC CPU, 2-part system and 8 control axes

No.	Name	Top	End	Points	[CPU1]
26801	EndRefDev1			400	
26802	EndRefDev2			1334	
26803	EndRefDev3			32	
26804	EndRefDev4			672	
26805	EndRefDev5			64	
26806	EndRefDev6			50	
26807	EndRefDev7			1200	
26808	EndRefDev8			560	
26809	EndRefDev9			5100	
26810	EndRefDev10	Y700	Y1FFF	400	
26811	EndRefDev11	D4096	D5429	1334	
26812	EndRefDev12	ZR672	ZR703	32	
26813	EndRefDev13	R5700	R6371	672	
26814	EndRefDev14	R6436	R6499	64	
26815	EndRefDev15	R8050	R8099	50	

No.	Name	Top	End	Points	[CPU1]
26816	EndRefDev16	R10600	R11799	1200	
26817	EndRefDev17	R12200	R12759	560	
26818	EndRefDev18	RC7000	RC12099	5100	
26819	EndRefDev19			400	
26820	EndRefDev20			1334	
26821	EndRefDev21			32	
26822	EndRefDev22			672	
26823	EndRefDev23			64	
26824	EndRefDev24			50	
26825	EndRefDev25			1200	
26826	EndRefDev26			560	
26827	EndRefDev27			5100	
26828	EndRefDev28			0	
26829	EndRefDev29			0	
26830	EndRefDev30			0	

(b-2) Perform the device setting on CPU2 side of NC2.

Press [Next CPU] at the bottom right. Confirm that [CPU2] is displayed in the top right.

CPU2 (CNC CPU side): Setting example of three units of CNC CPU, 2-part system and 8 control axes

No.	Name	Top	End	Points	[CPU2]
26801	EndRefDev1			400	
26802	EndRefDev2			626	
26803	EndRefDev3			64	
26804	EndRefDev4			1184	
26805	EndRefDev5			64	
26806	EndRefDev6			50	
26807	EndRefDev7			400	
26808	EndRefDev8			6860	
26809	EndRefDev9			0	
26810	EndRefDev10			0	
26811	EndRefDev11			0	
26812	EndRefDev12			0	
26813	EndRefDev13			0	
26814	EndRefDev14			0	
26815	EndRefDev15			0	

(b-3) Perform the device setting on CPU3 side of NC2.
Press [Next CPU] at the bottom right. Confirm that [CPU3] is displayed in the top right.

CPU3 (CNC CPU side): Setting example of three units of CNC CPU, 2-part system and 8 control axes

No.	Name	Top	End	Points	[CPU3]
26801	EndRefDev1	X700	X1FFF	400	
26802	EndRefDev2	D1024	D1649	626	
26803	EndRefDev3	ZR2688	ZR2751	64	
26804	EndRefDev4	R4500	R5683	1184	
26805	EndRefDev5	R6372	R6435	64	
26806	EndRefDev6	R8000	R8049	50	
26807	EndRefDev7	R11800	R12199	400	
26808	EndRefDev8	RC0	RC6859	6860	
26809	EndRefDev9			0	
26810	EndRefDev10			0	
26811	EndRefDev11			0	
26812	EndRefDev12			0	
26813	EndRefDev13			0	
26814	EndRefDev14			0	
26815	EndRefDev15			0	

(b-4) Perform the device setting on CPU4 side of NC2.
Press [Next CPU] at the bottom right. Confirm that [CPU4] is displayed in the top right.

CPU4 (CNC CPU side): Setting example of three units of CNC CPU, 2-part system and 8 control axes

No.	Name	Top	End	Points	[CPU4]
26801	EndRefDev1			400	
26802	EndRefDev2			626	
26803	EndRefDev3			64	
26804	EndRefDev4			1184	
26805	EndRefDev5			64	
26806	EndRefDev6			50	
26807	EndRefDev7			400	
26808	EndRefDev8			6860	
26809	EndRefDev9			0	
26810	EndRefDev10			0	
26811	EndRefDev11			0	
26812	EndRefDev12			0	
26813	EndRefDev13			0	
26814	EndRefDev14			0	
26815	EndRefDev15			0	

(c) Device setting of NC3

(Note) When the [Execute init.] menu is pressed at NC3, the settings for (c-1) to (c-4) are performed automatically.

(c-1) Perform the device setting on CPU1 side of NC3.

CPU1 (PLC CPU side): Setting example of three units of CNC CPU, 2-part system and 8 control axes

No.	Name	Top	End	Points	[CPU1]
26801	EndRefDev1			400	
26802	EndRefDev2			1334	
26803	EndRefDev3			32	
26804	EndRefDev4			672	
26805	EndRefDev5			64	
26806	EndRefDev6			50	
26807	EndRefDev7			1200	
26808	EndRefDev8			560	
26809	EndRefDev9			5100	
26810	EndRefDev10			400	
26811	EndRefDev11			1334	
26812	EndRefDev12			32	
26813	EndRefDev13			672	
26814	EndRefDev14			64	
26815	EndRefDev15			50	

No.	Name	Top	End	Points	[CPU1]
26816	EndRefDev16			1200	
26817	EndRefDev17			560	
26818	EndRefDev18			5100	
26819	EndRefDev19	Y700	Y1FFF	400	
26820	EndRefDev20	D4096	D5429	1334	
26821	EndRefDev21	ZR672	ZR703	32	
26822	EndRefDev22	R5700	R6371	672	
26823	EndRefDev23	R6436	R6499	64	
26824	EndRefDev24	R8050	R8099	50	
26825	EndRefDev25	R10600	R11799	1200	
26826	EndRefDev26	R12200	R12759	560	
26827	EndRefDev27	RC7000	RC12099	5100	
26828	EndRefDev28			0	
26829	EndRefDev29			0	
26830	EndRefDev30			0	

(c-2) Perform the device setting on CPU2 side of NC3.
Press [Next CPU] at the bottom right. Confirm that [CPU2] is displayed in the top right.

CPU2 (CNC CPU side): Setting example of three units of CNC CPU, 2-part system and 8 control axes

No.	Name	Top	End	Points	[CPU2]
26801	EndRefDev1			400	
26802	EndRefDev2			626	
26803	EndRefDev3			64	
26804	EndRefDev4			1184	
26805	EndRefDev5			64	
26806	EndRefDev6			50	
26807	EndRefDev7			400	
26808	EndRefDev8			6860	
26809	EndRefDev9			0	
26810	EndRefDev10			0	
26811	EndRefDev11			0	
26812	EndRefDev12			0	
26813	EndRefDev13			0	
26814	EndRefDev14			0	
26815	EndRefDev15			0	

(c-3) Perform the device setting on CPU3 side of NC3.
Press [Next CPU] at the bottom right. Confirm that [CPU3] is displayed in the top right.

CPU3 (CNC CPU side): Setting example of three units of CNC CPU, 2-part system and 8 control axes

No.	Name	Top	End	Points	[CPU3]
26801	EndRefDev1			400	
26802	EndRefDev2			626	
26803	EndRefDev3			64	
26804	EndRefDev4			1184	
26805	EndRefDev5			64	
26806	EndRefDev6			50	
26807	EndRefDev7			400	
26808	EndRefDev8			6860	
26809	EndRefDev9			0	
26810	EndRefDev10			0	
26811	EndRefDev11			0	
26812	EndRefDev12			0	
26813	EndRefDev13			0	
26814	EndRefDev14			0	
26815	EndRefDev15			0	

(c-4) Perform the device setting on CPU4 side of NC3.
Press [Next CPU] at the bottom right. Confirm that [CPU4] is displayed in the top right.

CPU4 (CNC CPU side): Setting example of three units of CNC CPU, 2-part system and 8 control axes

No.	Name	Top	End	Points	[CPU4]
26801	EndRefDev1	X700	X1FFF	400	
26802	EndRefDev2	D1024	D1649	626	
26803	EndRefDev3	ZR2688	ZR2751	64	
26804	EndRefDev4	R4500	R5683	1184	
26805	EndRefDev5	R6372	R6435	64	
26806	EndRefDev6	R8000	R8049	50	
26807	EndRefDev7	R11800	R12199	400	
26808	EndRefDev8	RC0	RC6859	6860	
26809	EndRefDev9			0	
26810	EndRefDev10			0	
26811	EndRefDev11			0	
26812	EndRefDev12			0	
26813	EndRefDev13			0	
26814	EndRefDev14			0	
26815	EndRefDev15			0	

(6) Turn the power OFF and ON.

11.4 Setting the Date and Time

Date and time settings on CNC CPU module are automatically sent to the GOT and PLC CPU.

(Note 1) This mode is enabled when "Clock setting" is set for "Time control" on GOT.
Refer to "9.1.4 Setting Time on GOT".
For the "time management" setting, refer to the following manuals:
GOT2000 Series User's Manual (Utility) (SH(NA)-081195)
GT Designer3 (GOT2000) Screen Design Manual (SH(NA)-081220)

(Note 2) When setting the time on CNC CPU, the setting will be reflected to the PLC CPU immediately, but it will be reflected to the GOT when the power is turned ON again or with the Trigger Type set in the Time setting.

(1) Select [Time] on the Monitr screen.

(2) Select [Time setting] on the integrated time screen.
The time setting mode is entered. The cursor appears at the "#1 Date" position in the Run-out time display.

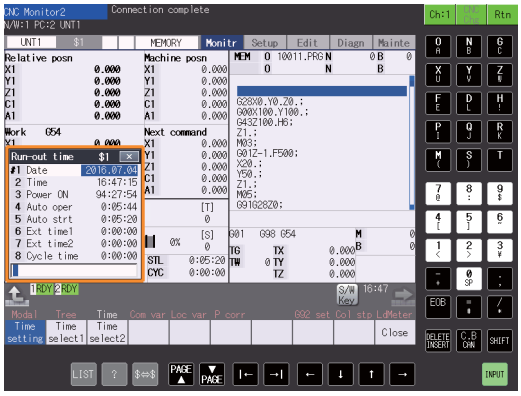

(3) Set the date and time to "#1 Date" and "#2 Time" respectively.

12

Setting Machine Parameters

12.1 Setting the Parameters for the System Specifications

(1) On the Mainte screen, select [Mainte] and then [Psswd input]. Enter the machine parameter password in the setting area and press the [INPUT] key.

(2) Go back to the Mainte screen.Then select [Param].
Set the parameters according to the system specifications.

"#1001 SYS_ON(System validation setup)"
"#1002 axisno(Number of axes)"
"#1003 iunit(Input setup unit)"
"#1004 ctrl_unit(Control unit)"
"#1005 plcunit(PLC unit)"
"#1006 mcmpunit(Machine error compensation unit)"
"#1037 cmdtyp(Command type)"
"#1039 spinno(Number of spindles)"
"#1155 DOOR_m"...Set to "100".
"#1156 DOOR_s"... Set to "100".
"#1511 DOORPm(Signal input device 1 for door interlock II: for each system)"
"#1512 DOORPs(Signal input device 2 for door interlock II: for each system)"

(3) After turning the power OFF and ON, select [Mainte] on the maintenance screen, switch the menu by the Menu change button and then select [Format].

(4) When "Input the password" is displayed, enter the password for the machine parameter in the setting area and then press [INPUT] key.

(5) When "Data protect" is displayed, select [I/F dia] on the Diagnosis screen, select [Modal output] and then enter "Y70A/1".

(6) Select [Mainte] on the maintenance screen and then select [Format].

(7) When "Format NC memory? (Y/N)" is displayed, press "Y". "Format complete" will be displayed.

(8) Turn the power ON again and select [Mainte] - [Psswd input] on the maintenance screen. Enter the password for the machine parameter and then press [INPUT].
Select [Param] again on the Mainte screen. Set the following parameters.
"#1010 srvunit(Output unit(servo))"
"#1013 axname(Axis name)"
(Note) When the arbitrary axis exchange control is valid, set the axis names in "#12071 adr_abs[1]" to "#12078 adr_abs[8]".
"#1021 mcp_no(Drive unit I/F channel No. (servo)))"

Set the following parameters as needed.
"#1014 incax(Incremental command axis name)"
(Note) When the arbitrary axis exchange control is valid, set the incremental command axis name in "#12079 adr_inc[1]" to "#12086 adr_inc[8]".
"#1015 cunit(Command unit)"
"#1017 rot(Rotational axis)"
"#1018 ccw(Motor CCW)"
"#1019 dia(Diameter specification axis)"
"#1020 sp_ax(Spindle interpolation)"
"#1022 axname2(2nd axis name)"

(9) Turn the power OFF and ON.

12.2 Setting the Parameters for the Machine Specifications

(1) On the Mainte screen, select [Mainte] and then [Psswd input]. Enter the machine parameter password in the setting area and press the [INPUT] key.
(Note 1) To enter the character "A", press the shift key and then "A" key. Do not press both keys at the same time.

(2) Go back to the Mainte screen.Then select [Param].
Set the parameters according to the machine specifications. Setting of the following parameters is necessary.

Base system parameters

"#1025 I_plane (Initial plane selection)"
"#1026 base_I (Base axis I)"
"#1027 base_J (Base axis J)"
"#1028 base_K (Base axis K)"
"#1029 aux_I (Flat axis I)"
"#1030 aux_J (Flat axisJ)"
"#1031 aux_K (Flat axis K)"

Base axis specification parameters

"#1603 PLCdev_no (Axis device assignment No.)"
(Note) Set this when the system has five or more part systems or when you want to change the assignment of axis device.

[Device]

$1	$2	$3	$4	
(1)	(9)	(17)	(25)	Axis 1
(2)	(10)	(18)	(26)	Axis 2
(3)	(11)	(19)	(27)	Axis 3
(4)	(12)	(20)	(28)	Axis 4
(5)	(13)	(21)	(29)	Axis 5
(6)	(14)	(22)	(30)	Axis 6
(7)	(15)	(23)	(31)	Axis 7
(8)	(16)	(24)	(32)	Axis 8

(Note) The device Nos corresponding to (1) to (32) differ depending on device type.

Configuration example for seven part systems (Number of axes per part system: 8, 1, 1, 1, 1, 1, 3)
(Assumed to use the device of each part system in the ladder as follows:)

$1 Axis 1 [Axis 1] → (1), $1 Axis 2 [Axis 2] → (2),
$1 Axis 3 [Axis 3] → (3), $1 Axis 4 [Axis 4] → (4),
$1 Axis 5 [Axis 5] → (5), $1 Axis 6 [Axis 6] → (6),
$1 Axis 7 [Axis 7] → (7), $1 Axis 8 [Axis 8] → (8),
$2 Axis 1 [Axis 9] → (9), $3 Axis 1 [Axis 10] → (10),
$4 Axis 1 [Axis 11] → (11), $5 Axis 1 [Axis 12] → (12),
$6 Axis 1 [Axis 13] → (13), $7 Axis 1 [Axis 14] → (14),
$7 Axis 2 [Axis 15] → (15), $7 Axis 3 [Axis 16] → (16)
(Note) (17) to (32) are unused areas.

Parameter setting value (For the above configuration example):

	Axis 1	Axis 2	Axis 3	Axis 4	Axis 5	Axis 6	Axis 7	Axis 8
#1603	1	2	3	4	5	6	7	8
	Axis 9	Axis 10	Axis 11	Axis 12	Axis 13	Axis 14	Axis 15	Axis 16
#1603	9	10	11	12	13	14	15	16

Base common parameters

"#1041 I_inch (Initial state (inch))"
"#1042 pcinch (PLC axis command (inch))"
"#1239 set11/bit1 (Handle I/F selection)"
"#1240 set12/bit0 (Handle input pulse)"

Axis specification parameter

"#2001 rapid (Rapid traverse rate)"
"#2002 clamp (Cutting feedrate for clamp function)"
"#2003 smgst (Acceleration and deceleration modes)"
"#2004 G0tL (G0 time constant)"
"#2005 G0t1(G0 time constant(primary delay)"
"#2007 G0tL (G1 time constant)"
"#2008 G1t1(G1 time constant (primary delay))"

Spindle specification parameter

"#3001 slimt1 (Limit rotation speed (Gear: 00))"
"#3002 slimt2 (Limit rotation speed (Gear: 01))"
"#3003 slimt3 (Limit rotation speed (Gear: 10))"
"#3004 slimt4 (Limit rotation speed (Gear: 11))"
"#3005 smax1 (Maximum rotation speed (Gear: 00))"
"#3006 smax2 (Maximum rotation speed (Gear: 01))"
"#3007 smax3 (Maximum rotation speed (Gear: 10))"
"#3008 smax4 (Maximum rotation speed (Gear: 11))"
"#3023 smini (Minimum rotation speed)"
"#3024 sout (Spindle connection)"
"#3031 smcp_no (Drive unit I/F channel No.(spindle))"
"#3109 zdetspd (Z phase detection speed)"

Set the servo parameters according to the instruction manual for your drive. Set the spindle parameters according to "Parameter setting list".

(3) Turn the power OFF and ON.

12.3 Setting Drive Unit MDS-E/EH Series

12.3.1 Setting the Rotary Switch

Set the axis number with the rotary switch.

<Drive unit>

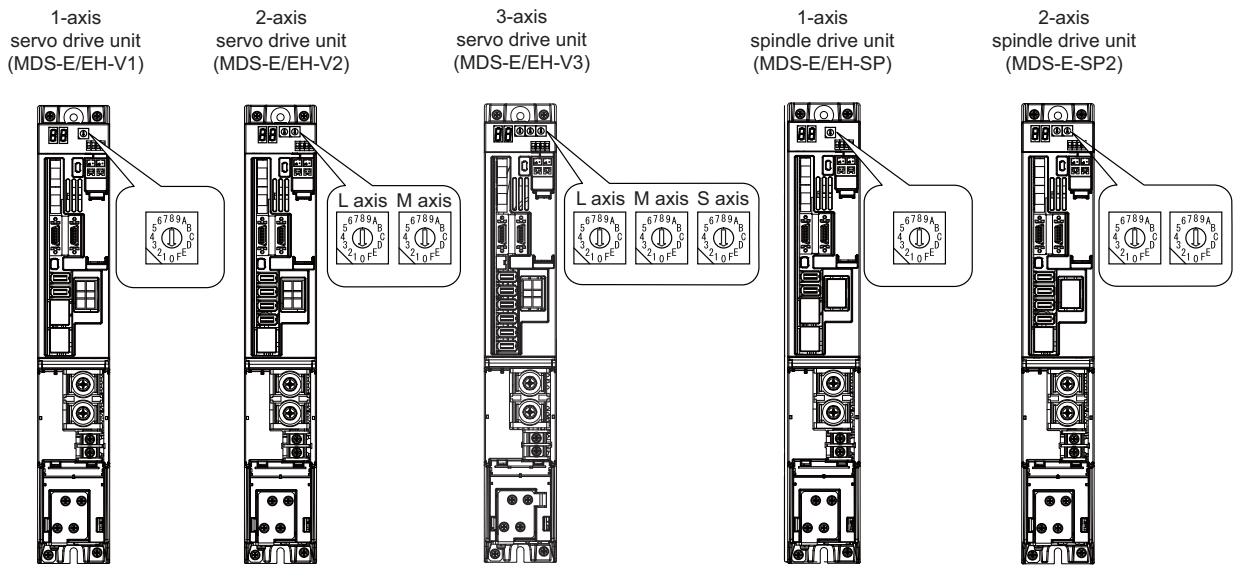

MDS-E/EH-V1/V2/SP, MDS-E/EH-V3/SP2 setting

Rotary switch setting	AXIS NO.
0	1st axis
1	2nd axis
2	3rd axis
3	4th axis
4	5th axis
5	6th axis
6	7th axis
7	8th axis
8	9th axis
9	10th axis
A	11th axis
B	12th axis
C	13th axis
D	14th axis
E	15th axis
F	16th axis

<Power supply unit>

Power supply unit
(MDS-E/EH-CV)

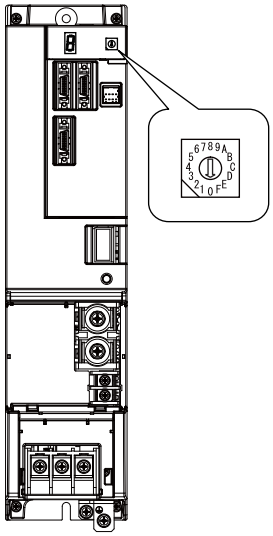

MDS-E/EH-CV setting

Rotary switch setting	Setting items
0	Normal setting
1 ～ 3	Setting prohibited
4	External emergency stop setting
5 ～ F	Setting prohibited

12.3.2 Setting DIP Switch

As a standard setting, turn the all DIP switches OFF.

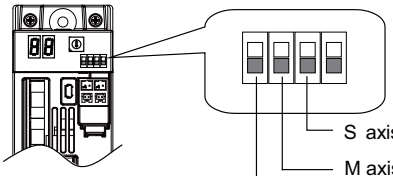

The switches are OFF when facing bottom as illustrated.

S axis Setting unused axis
M axis Setting unused axis
L axis Setting unused axis

Unused axis can be set by turning the switches ON.
When there is unused axis for the drive unit,
set unused axis.

> ⚠ **CAUTION**
>
> **An axis set unused is not included in the functional safety.**

12.4 Setting Drive Unit MDS-EM/EMH Series

12.4.1 Setting the Rotary Switch

Set the axis number with the rotary switch.

< Drive unit >

Multi axis unit
(MDS-EM/EMH-SPV3)

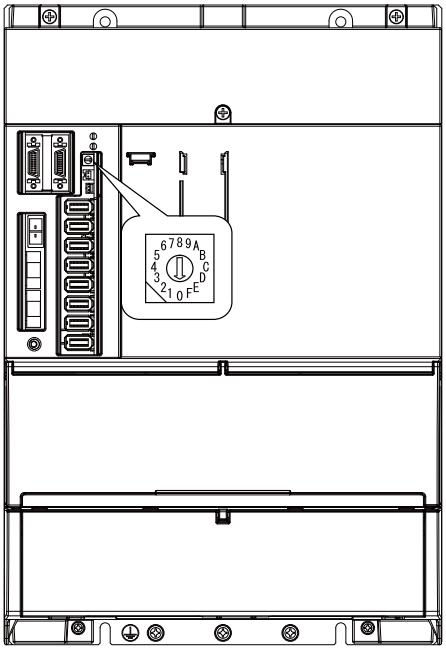

MDS-EM/EMH-SPV3 setting

Rotary switch setting	Axis configuration	Spindle	Servo		
			L-axis	M-axis	S-axis
0	Spindle + Servo 3 axes	1st axis	2nd axis	3rd axis	4th axis
1		5th axis	6th axis	7th axis	8th axis
2		9th axis	10th axis	11th axis	12th axis
3		13th axis	14th axis	15th axis	16th axis
4	Spindle + Servo 2 axes	1st axis	2nd axis	3rd axis	-
5		5th axis	6th axis	7th axis	-
6		9th axis	10th axis	11th axis	-
7		13th axis	14th axis	15th axis	-
8	Setting impossible	-	-	-	-
9	Setting impossible	-	-	-	-
A	Setting impossible	-	-	-	-
B	Setting impossible	-	-	-	-
C	Setting impossible	-	-	-	-
D	Setting impossible	-	-	-	-
E	Setting impossible	-	-	-	-
F	Setting impossible	-	-	-	-

⚠ CAUTION

The axis configuration "Spindle + Servo 2 axes" is the state where the servo axis S is disabled.

Set the NC parameter (#1021) according to the axis numbers.

12.5 Setting Drive Unit MDS-EJ/EJH Series

12.5.1 Setting the Rotary Switch

Set the axis number with the rotary switch.

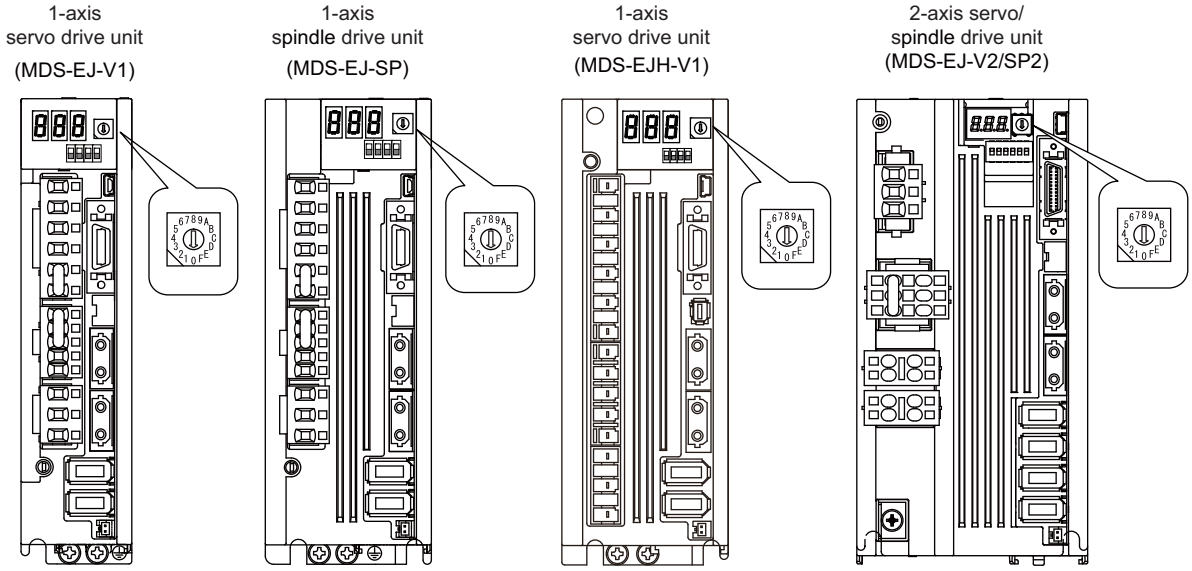

MDS-EJ/EJH-V1, MDS-EJ-SP setting

Rotary switch setting	AXIS NO.
0	1st axis
1	2nd axis
2	3rd axis
3	4th axis
4	5th axis
5	6th axis
6	7th axis
7	8th axis
8	9th axis
9	10th axis
A	11th axis
B	12th axis
C	13th axis
D	14th axis
E	15th axis
F	16th axis

MDS-EJ-V2/SP2 setting

Rotary switch setting	AXIS NO.	
	L axis	M axis
0	1st axis	2nd axis
1	2nd axis	3rd axis
2	3rd axis	4th axis
3	4th axis	5th axis
4	5th axis	6th axis
5	6th axis	7th axis
6	7th axis	8th axis
7	8th axis	9th axis
8	9th axis	10th axis
9	10th axis	11th axis
A	11th axis	12th axis
B	12th axis	13th axis
C	13th axis	14th axis
D	14th axis	15th axis
E	15th axis	16th axis
F	Setting prohibited	

(Note 1) As for 2-axis drive unit, one rotary switch sets the L and M axes to the consecutive axis Nos.
(Note 2) As for 2-axis drive unit, the rotary switch setting "F" is prohibited.

12.5.2 Setting the DIP Switch

As a standard setting, turn the all DIP switches OFF.

MDS-EJ/EJH-V1, MDS-EJ-SP setting

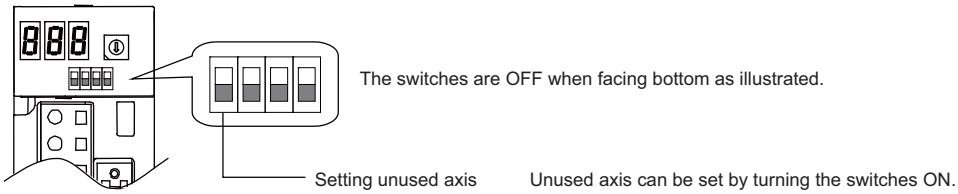

MDS-EJ-V2/SP2 setting

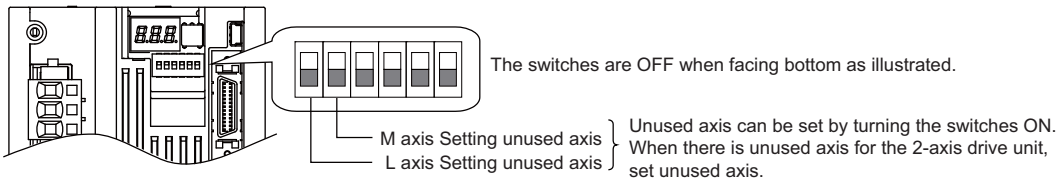

⚠ CAUTION

An axis set unused is not included in the functional safety.

12.6 Setting Up without Connecting to the Motor/Drive Units at the Setup of Drive Unit

When connecting the motor or drive unit after setting up the system, set the axis data beforehand to enable the operation without the motor or drive unit. The following shows the procedures.

Setting Up without Connecting to the Motor

The axis detachment can be used for servo axis. The detachment function cannot be used for spindle.

(1) Set the drive unit rotary switch and "#1021 mcp_no" for the axis that is not connected to the motor.
(2) Set the parameter "#1070 axoff" to "1" for the axis that is not connected to the motor.
(3) Do (a) or (b).
  (a) Set parameter "#8201 AX. RELEASE" to "1" for the axis that is not connected to the motor.
  (b) Turn ON the control axis detach signal (Y780) for the axis that is not connected to the motor.

Setting Up without Connecting to the Drive Unit

Set the following parameters.

(1) Set "#1021 mcp_no" (for the servo axis) or "#3031 smcp_no" (for the spindle) to the axis or the spindle that is not connected to the drive unit.
(2) Set the following parameters to the axis that is not connected to the drive unit.
  For the servo axis: Set "#2018 no_srv" to "1".
  For the spindle: Set "#3024 sout" to "0".

(Note) After connecting to the drive unit, make sure to set "#2018 no_srv" to "0" and "#3024 sout" to "1".

12.7 Servo Simplified Adjustment

12.7.1 First Measure Against Vibration

Setting the filter can reduce the vibration.

(1) Select [Drv mon] and then [Servo unit] on the Diagn screen. See the displayed value in "AFLT frequency".

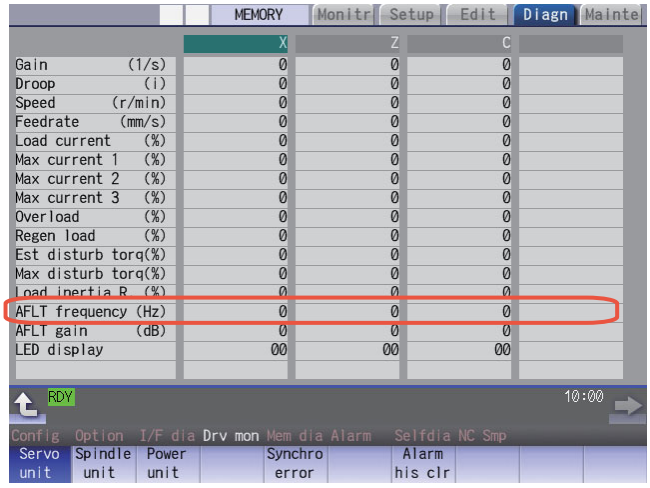

(Note) The screen above is when NC parameters have default values.

(2) Select [Param] and then [Servo param] on the Mainte screen. Set the AFLT frequency value you saw at (1) to "#2238 SV038 FHz1 (Notch filter frequency 1)".

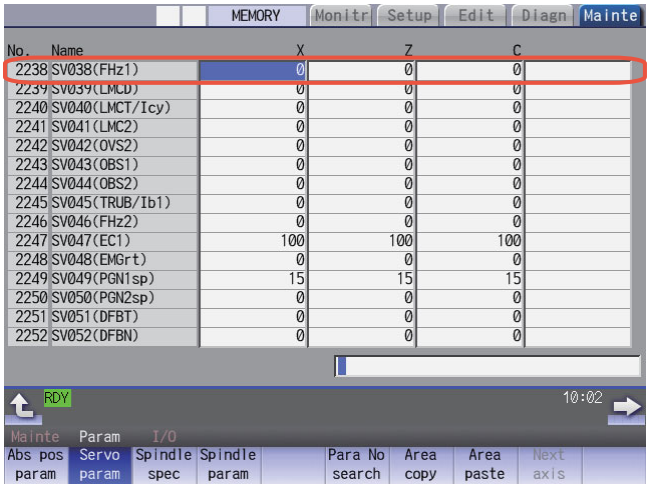

(Note) The screen above is when NC parameters have default values.

If the vibration is not reduced by the measure, refer to the manuals of the drive unit you are using.

12.7.2 NC Analyzer2

Servo parameters can be automatically adjusted by measuring and analyzing the machine characteristics. Measurement and analysis are conducted by driving the motor using machining programs for adjustment or vibration signals. Various data can also be sampled.

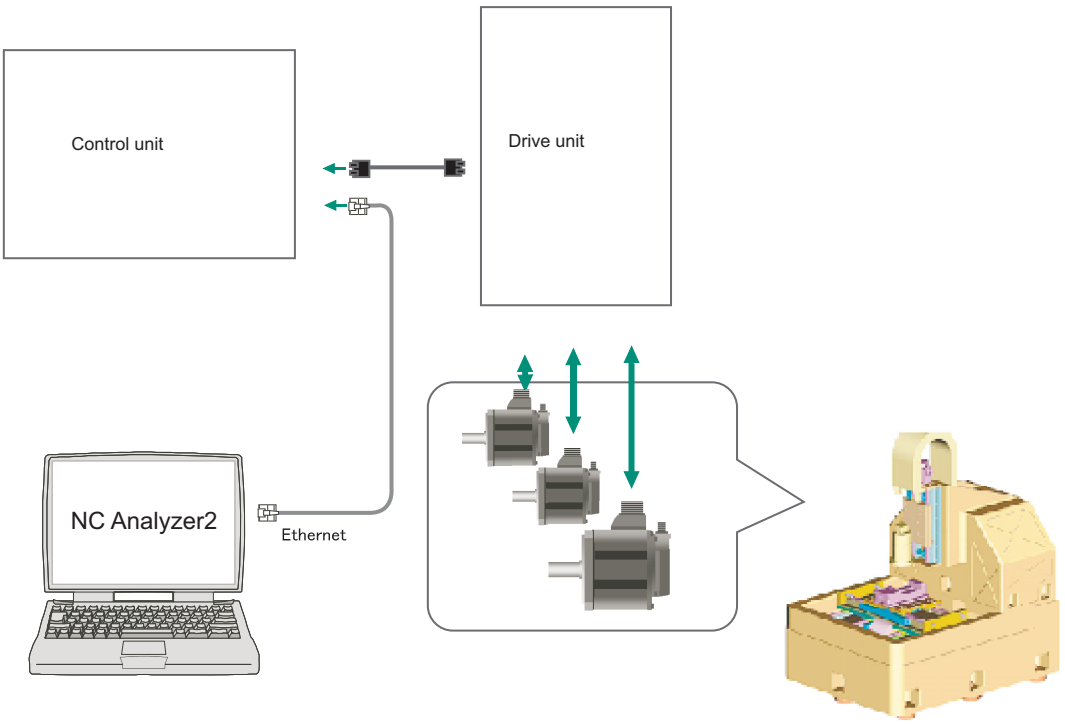

<Functions>

Adjustment wizard	Description
Velocity loop gain adjustment	Automatically adjusts velocity loop gain and resonance filters.
Lost motion adjustment	Adjusts the lost motion automatically for the delay in responsecaused when the direction of the machine rotates is reversed.

Measurement and adjustment	Description
Frequency response measurement	Measures the frequency response of speed loop for the designated axis. The result will be output as frequency response waveform.
Reciprocation acceleration/ deceleration measurement	Measures the reciprocation acceleration/deceleration for the designated axis. The result will be output as time-series waveform. (*1)
Roundness measurement	Measures the roundness for the designated axis. The result will be output as roundness waveform. (*1)
Synch tap error measurement	Measures the synchronous tap error for the designated axis. The result will be output as time-series waveform.(*1)
Spindle acceleration/deceleration measurement	Measures the spindle acceleration/deceleration for the designated axis. The result will be output as time-series waveform. (*1)
Spindle orientation measurement	Measures the spindle orientation for the designated axis. The result will be output as time-series waveform.(*1)
Spindle C-axis measurement	Executes the reciprocation acceleration/deceleration measurement of spindle C axis with specified axis. The result will be output as time-series waveform. (*1)
Spindle synchronization measurement	Executes an arbitrary machining program with specified axis, and measures spindle synchronization by using that data. The result will be output as time-series waveform.
PLC axis acceleration/deceleration measurement	Executes an arbitrary machining program with specified axis, and measures PLC axis acceleration/deceleration by using that data. The result will be output as time-series waveform.
Arbitrary path measurement (*2)	Executes an arbitrary machining program with specified two axes. The result will be output as arbitrary path measurement waveform. (*1)

(*1) For the measurement, create a program by the program creation function or use an arbitrary machining program.
(*2) Two or more NC axes in the same system are needed.

For details, refer to "NC Analyzer2 Instruction Manual" (IB-1501501326).

13

Setting the Position Detection System

There are two kinds of position detection system: one is "relative position detection", which establishes the reference position (zero point) at every CNC power-ON; the other is "absolute position detection", which allows to start the operation without establishing the reference position (zero point) again after the CNC power-ON.

13.1 Adjusting the Absolute Position Detection System

There are five types of the absolute position zero point initial setting: "marked point alignment method", "marked point alignment method II", "machine end stopper method", "grid-on method", and "dog-type".

Set the parameter "#2049 type (Absolute position detection method)" for the type and method of absolute position zero point initial setting.
The required components differ depending on the detection method.

Method	Required component	Basic position	#2049 type	#2059 zerbas	Reference
Marked point alignment method I	None	The first grid point which is returned from the position where the mark is aligned.	2	1	13.1.1
Marked point alignment method II	None	The position where the marks are aligned.	4	0	13.1.2
Machine end stopper method	Machine end stopper	The position where the table is pushed against the machine end stopper.	1	0	13.1.3 13.1.4
		The first grid pointed which is returned from the position where the table is pushed against the machine end stopper.	1	1	
Grid-on method	None	The nearest grid point.	5	0	13.1.5
Dog type	Dog, dog-sensor	The first grid point after the dog OFF.	3	0	13.1.6

[Characteristics of each method]

(1) Marked point alignment method I

Align the table side's mark and the machine side's mark.
The first grid point which is returned from the marks are aligned is determined as the basic position.
Because the first grid point which is returned from the marks are aligned is determined as the basic position, the reproducibility is kept even the position information is lost due to runnning out of battery etc.

(2) Marked point alignment method II

Align the table side's mark and the machine side's mark.
The position where the marks are aligned is determined as the basic position.
Because the position where the marks are alinged is determined as the basic position, the reproductivity is low if the position information is lost due to running out of battery etc.

(3) Machine end stopper method

Push the table against the machine end stopper.
[When #2059 zerbas = 0]
The position where the table is pushed against the machine end stopper is determined as the basic position.
[When #2059 zerbas = 1]
The first grid point which is returned from the position where the table is pushed against the machine end stopper is determined as the basic position.

There are two types of the machine end stopper method: automatic initialization and manual initialization.
When the automatic initialization is applied, the axis travels automatically after the JOG is started.
When the manual initialization is applied, the axis travels by handle mode or JOG mode while confirming each operation.

(4) Grid-on method

This method enables the operation for the first zero point initialization easier without the screen operation.
After positioning to the nearest grid point, the zero point is established at the point.

(5) Dog method

This method requires a dog sensor.
Move the table until the dog is kicked, and the first grid point after the dog OFF is determined as the basic position.

13.1.1 Marked Point Alignment Method I

(1) Preparations
Set the parameters on the Abs pos param screen.

➡ #2049 type (absolute position detection method): 2
(marked point alignment method I)
#2050 absdir (basic point of Z direction): 0 or 1
#2059 zerbas (select zero point parameter and basic point): 0
The parameters other than "#2049 type" can also be set on Absolute position setting screen.

(2) Turn the power OFF and ON.
(Only when "#2049 type" is specified again.)

The following are the operations on the absolute position setting screen. (Select [Mainte] - [To Abs pos])

(3) Select an axis to set the absolute position.

There are two methods to select an axis.

- Select the menu [Axis select], enter the axis name in the input area then press [INPUT]. (For the axis name, input the name set to the parameter "#1022 axname2" (2nd axis name).)

- Press the menu [Prev axis] and [Next axis] to switch the axis.

➡

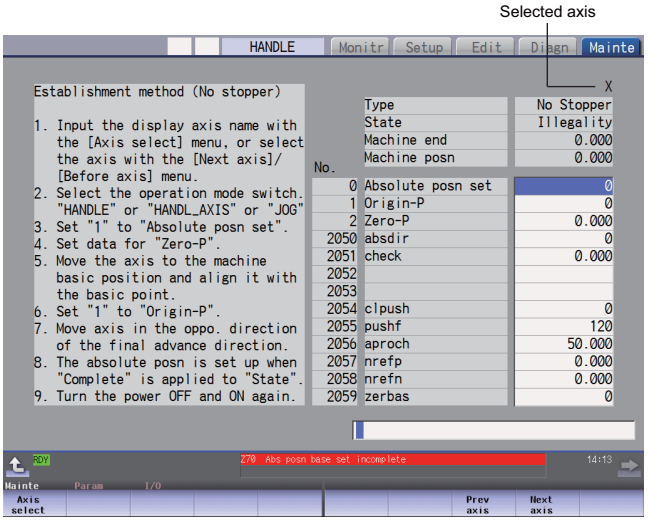

(4) Select "HANDLE" or "JOG" for the mode selection of machine operation switch.

(5) Confirm that the cursor is placed on "Absolute posn set", input "1" in the input area and press the [INPUT] key.

➡ The input value is registered in the "Absolute posn set" area.
State: [Origin set]

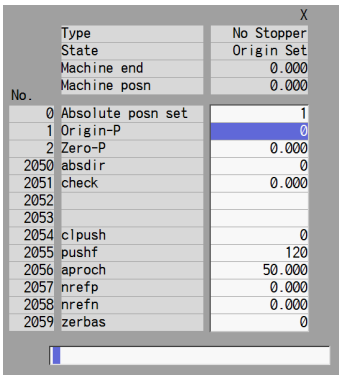

(6) Move the axis to mechanical basic position.

(7) Move the cursor to "Origin-P" with the [↑] and [↓] keys.
Input "1" in the input area and press the [INPUT] key.

➡ The input value is registered in the "Origin-P" area.
State: [Ret. Ref. P.]
Machine end: Distance between the mechanical basic position and the first grid point

(8) Move the axis in the direction designated with the absolute position parameter "#2050 absdir".

(9) The axis stops when it reached the first grid point.

➡ State: [Complete]
Machine position: Current machine position

(10) Set the "Zero-P".

Move the cursor to "Zero-P" with the [↑] and [↓] keys. Input the distance from the basic machine coordinate zero point to the grid point immediately preceding the basic position in the input area then press [INPUT].

Setting "Zero-P"

When the machine is set up for the first time or when the grid point has changed because of replacement of motor and encoder, set the distance from the basic machine coordinate system zero point from the grid point (electric basic position) to "Zero-P". (When you set mechanical reference position as basic machine coordinate system zero point, set the display value of "Machine end" to "Zero-P".)

When you perform zero point initial setting due to the disappearance of the absolute position, the grid point (electric basic position) does not change; therefore, there is no need to set "Zero-P" again.

The zero point initial setting is now complete. After initializing all axes, turn the power OFF and ON.

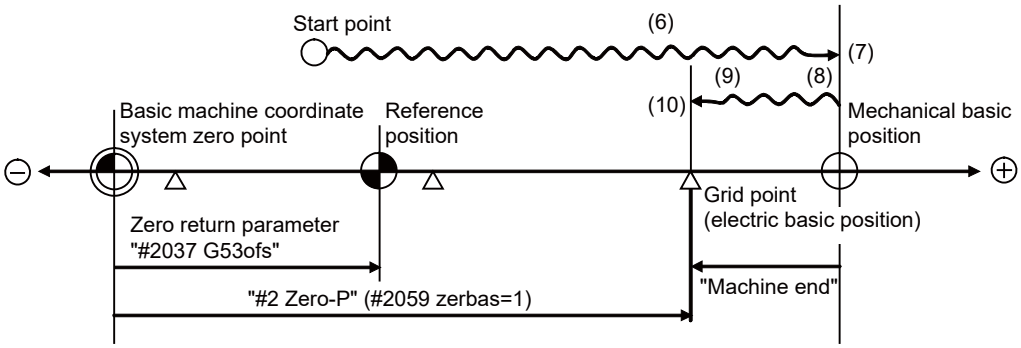

- (6) to (10) in this diagram indicate steps of the operation procedure.

(Note 1) To change just the basic machine coordinate zero point, set "#0 Absolute posn set" and "#2 Zero-P", and then turn the power OFF and ON.

(Note 2) If aligning the axis on the marked point is attempted without passing the grip point once after turning the power ON, the operation message "Not passed on grid" will appear. Return to a point before the last grid, and then repeat from step of aligning the axis on the marked point.

(Note 3) If the first grid point is covered by the grid mask (#2028 grmask) as a result of return to the electric basic position in the step (8), the axis stops at the next grid point.
Note that reference position shift amount (#2027 G28sft) is invalid.

(Note 4) Confirm the "absdir" setting if the machine does not move in the direction of "#2050 absdir" in the step (8). The machine will move only in the positive direction when set to "0", and the negative direction when set to "1".

13.1.2 Marked Point Alignment Method II

(1) Preparations
Set the parameters on the Abs pos param screen.

➡ #2049 type (absolute position detection method): 4
(marked point alignment method II)
#2059 zerbas (zero return parameter): 0
The parameters other than “#2049 type” can also be set in Absolute position setting screen.

(2) Turn the power OFF and ON.
(Only when "#2049 type" is specified again.)

The following are the operations on the absolute position setting screen. (Select [Mainte] - [To Abs pos])

(3) Select an axis to set the absolute position.

There are two methods to select an axis.

- Select the menu [Axis select], enter the axis name in the input area then press [INPUT]. (For the axis name, input the name set to the parameter "#1022 axname2" (2nd axis name).)

- Press the menu [Prev axis] and [Next axis] to switch the axis.

➡

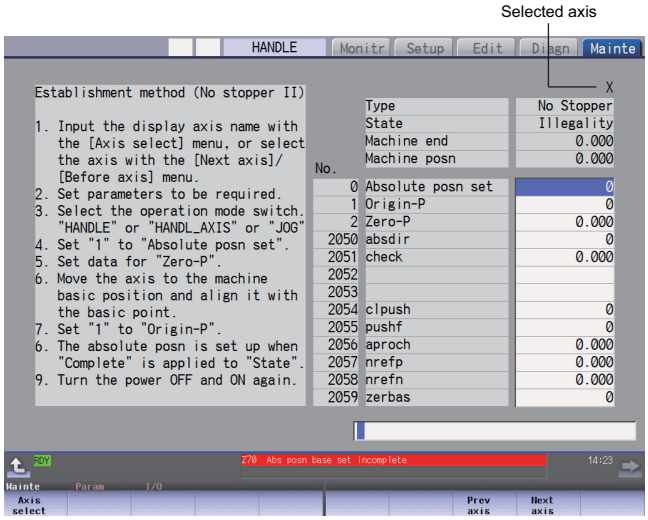

(4) Select "HANDLE" or "JOG" for the machine operation switch.

(5) Confirm that the cursor is placed on "Absolute posn set", input "1" in the input area and press the [INPUT] key.

➡ The input value is registered in the "Absolute posn set" area.
State: [Origin set]

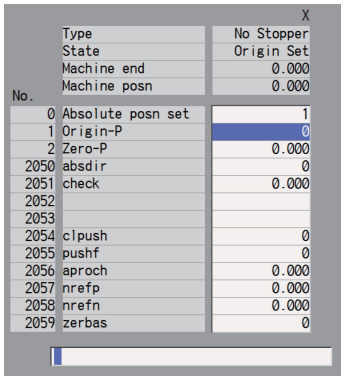

(6) Move the cursor to "Zero-P" with the [↑] and [↓] keys.
Enter the value in the input area of "Zero-P" and press the [INPUT] key.

➡ The input value is registered in the "Zero-P" area.

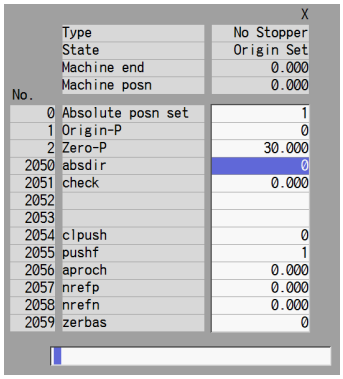

(7) Move the axis to the mechanical basic position.

(8) Move the cursor to "Origin-P" with the [↑] and [↓] keys.
Input "1" in the input area and press the [INPUT] key.

The input value is registered in the "Origin-P" area.
State: [Complete]
Machine end: 0.000
Machine position: Value set for "Zero-P"

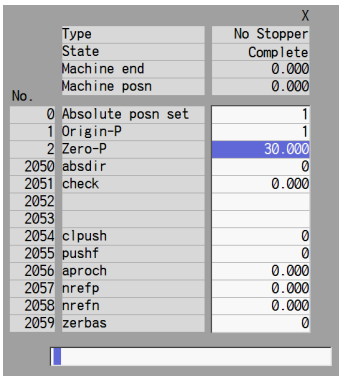

		X
	Type	No Stopper
	State	Complete
	Machine end	0.000
	Machine posn	0.000
No.		
0	Absolute posn set	1
1	Origin-P	1
2	Zero-P	30.000
2050	absdir	0
2051	check	0.000
2052		
2053		
2054	clpush	0
2055	pushf	0
2056	aproch	0.000
2057	nrefp	0.000
2058	nrefn	0.000
2059	zerbas	0

The zero point initial setting is now complete. After initializing all axes, turn the power OFF and ON.

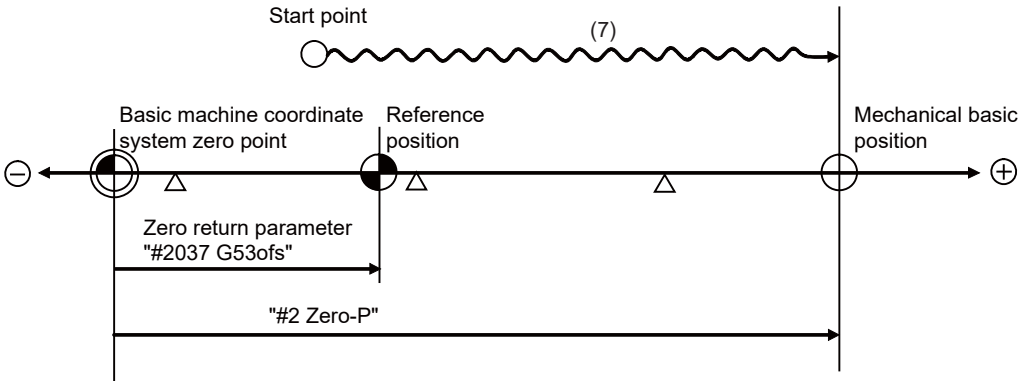

(Note 1) To change just the basic machine coordinate zero point, set "#0 Absolute posn set" and "#2 Zero-P", and then turn the power OFF and ON.

13.1.3 Machine End Stopper Method: Automatic Initialization

(1) Preparations
Set the parameters on the Abs pos param screen.

➡ #2049 type (absolute position detection method): 1 (stopper method)
#2054 clpush (current limit): 0 to 100 (*1)
#2055 pushf (push speed): 1 to 999
#2056 aproch (approach point): 0 to 999.999
#2059 zerbas (select zero point parameter and basic point): 0 or 1 (*2)
The parameters other than “#2049 type” can also be set on Absolute position setting screen.

(2) Turn the power OFF and ON.
(Only when "#2049 type" is specified again.)

The following are the operations on the absolute position setting screen. (Select [Mainte] - [To Abs pos])

(3) Select an axis to set the absolute position.

There are two methods to select an axis.

- Select the menu [Axis select], enter the axis name in the input area then press [INPUT]. (For the axis name, input the name set to the parameter "#1022 axname2" (2nd axis name).)

- Press the menu [Prev axis] and [Next axis] to switch the axis.

➡

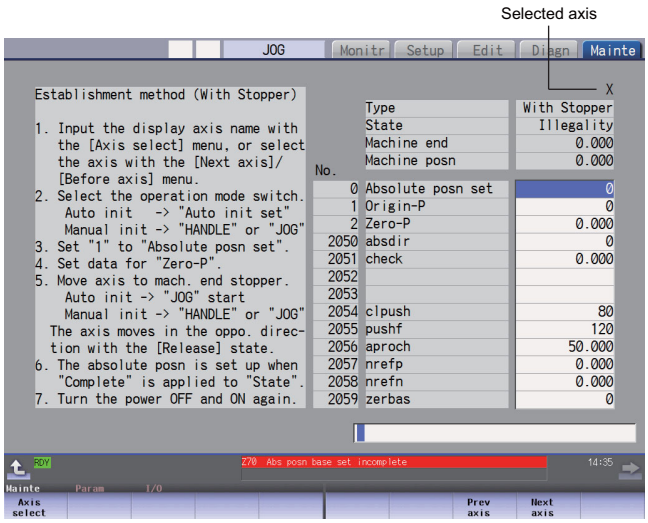

(4) Select the "Auto init set" mode of machine operation switch.

(5) Confirm that the cursor is placed on "Absolute posn set", input "1" in the input area and press the [INPUT] key.

➡ The input value is registered in the "Absolute posn set" area.

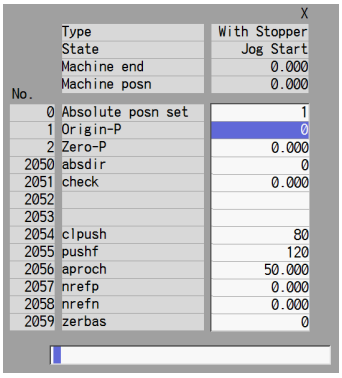

(6) When the parameter "#2059 zerbas" is set to "0", set "Zero-P" here. (*2)
Move the cursor to "Zero-P" with the [↑] and [↓] keys.
Input the distance from the basic machine coordinate zero point to the machine end stopper in the input area then press [INPUT].

➡ The input value is registered in the "Zero-P" area.

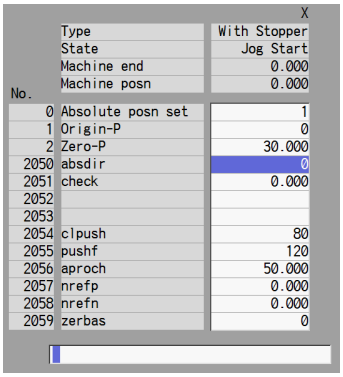

(7)	Start JOG operation. The axis moves toward the machine end stopper at the pushing speed (#2055 pushf).	➡	State: [Stopper1]
(8)	After the axis pushes against the machine end stopper and the current reaches its limit continually during given time period, the axis returns toward the approach point at the pushing speed.	➡	State: [Zero-P. Rel.]
(9)	After the axis arrives at the approach point, the axis moves toward the machine end stopper at the pushing speed.	➡	State: [Stopper2]
(10)	When the parameter "#2059 zerbas" is set to "0", the axis pushes against the machine end stopper and stops when the current reaches its limit.	➡	State: [Complete] Machine end: 0.000 Machine position: Current machine position
(11)	When the parameter "#2059 zerbas" is set to "1", the axis pushes against the machine end stopper, and the current reaches its limit, the axis reverses and moves at the pushing speed (#2055 pushf). Then the axis stops at the first grid point. Move the cursor to "Zero-P" with the [↑] and [↓] keys. Input the distance from basic machine coordinate system zero point to the grid point immediately preceding the basic position then press [INPUT].	➡	State: [Complete] Machine end: Distance from the machine end stopper to position immediately preceding the grid point Machine position: Current machine position

The zero point initial setting is now complete. After initializing all axes, turn the power OFF and ON.

(*1) Low current limit value may prevent the basic movement of the axis. Do not set such a low value.
Set an appropriate value taking into account the acceleration torque and the friction torque.
When the current limit value is set too low, the servo error 3E (magnetic pole position detection error) may occur.

(*2) Depending on the setting value of the parameter "#2059 zerbas", the value set for "Zero-P" differ as shown in the following figure.

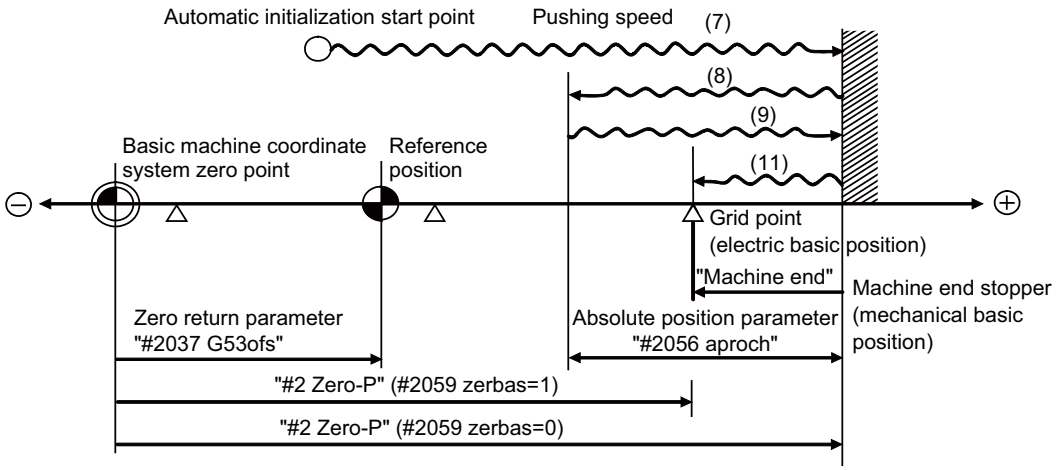

- (7) to (11) in this diagram indicate steps of the operation procedure.

(Note 1) To change just the basic machine coordinate zero point, set "#0 Absolute posn set" and "#2 Zero-P", and then turn the power OFF and ON.

(Note 2) If pressing against the machine end is attempted without passing the grip point once after turning the power ON, the operation message "Not passed on grid" will appear. Return to a point before the last grid, and then repeat from step of pressing against the machine end stopper.

(Note 3) If the first grid point is covered by the grid mask (#2028 grmask) as a result of return to the electric basic position in the step (11), the axis stops at the next grid point.
Note that reference position shift amount (#2027 G28sft) is invalid.

(Note 4) Acceleration/deceleration during movement at the specified push speed is performed in smoothing-off (stepfeed) mode.

(Note 5) If "0" is specified for "#2056 aproch" of the absolute position parameters, the machine zero point is regardedas the approach point.

(Note 6) Automatic initialization is interrupted if one of the following events occurs. If it is interrupted, [State] indicates "Jog Start" (after selecting the "Auto init set" mode if it is caused by mode change), so restart operation from the step of JOG-start.
- An absolute position detection alarm occurs.
- Operation preparation signal turns OFF.
- The mode is changed.
- The system is reset.

If [State] is "Complete" before automatic initialization is started, "State" returns to "Complete" when power is turned OFF and ON again without restarting the operation.

(Note7) Automatic initialization cannot be started in the following cases. The operation message "Can't start" will appear if starting is attempted.
- When "#0 Absolute posn set" is not set.
- When the "#2 Zero-P" setting is inappropriate.
- When the absolute position parameter "#2055 pushf" is not set.
- When "Z71 Abs encoder failure 0005" has occurred.

Supplementing one of the points above, "Zero-P" setting is inappropriate when "#2 Zero-P" is smaller than the "#2037 G53ofs" or when "#2 Zero-P" is set to "0" as shown below.

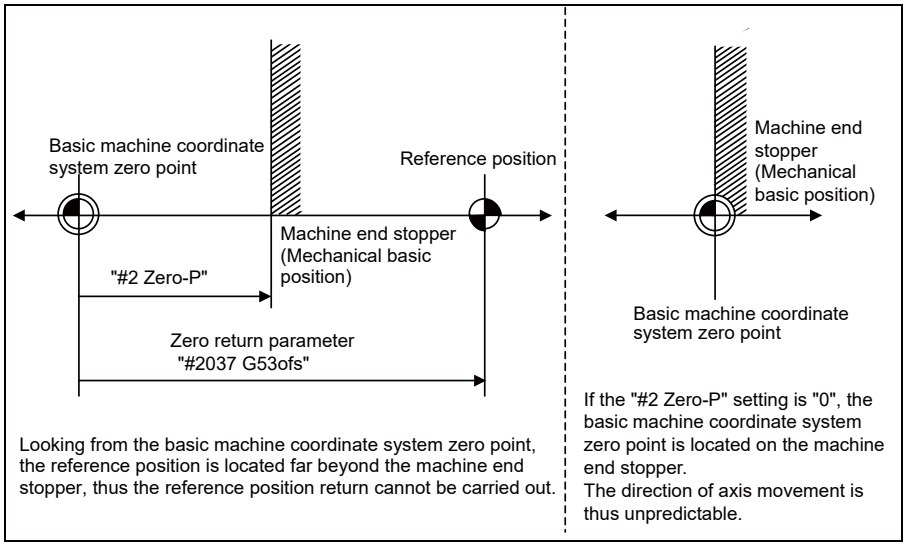

13.1.4 Machine End Stopper Method: Manual Initialization

(1) Preparations
Set the parameters on the Abs pos param screen.

➡ #2049 type (absolute position detection method): 1 (stopper method)
#2054 clpush (current limit): 0 to 100 (*1)
#2059 zerbas (select zero point parameter and basic point): 0 or 1 (*2)
The parameters other than "#2049 type" can also be set on Absolute position setting screen.

(2) Turn the power OFF and ON.
(Only when "#2049 type" is specified again.)

The following are the operations on the absolute position setting screen. (Select [Mainte] - [To Abs pos])

(3) Select an axis to set the absolute position.

There are two methods to select an axis.

- Select the menu [Axis select], enter the axis name in the input area then press [INPUT]. (For the axis name, input the name set to the parameter "#1022 axname2" (2nd axis name).)

- Press the menu [Prev axis] and [Next axis] to switch the axis.

➡

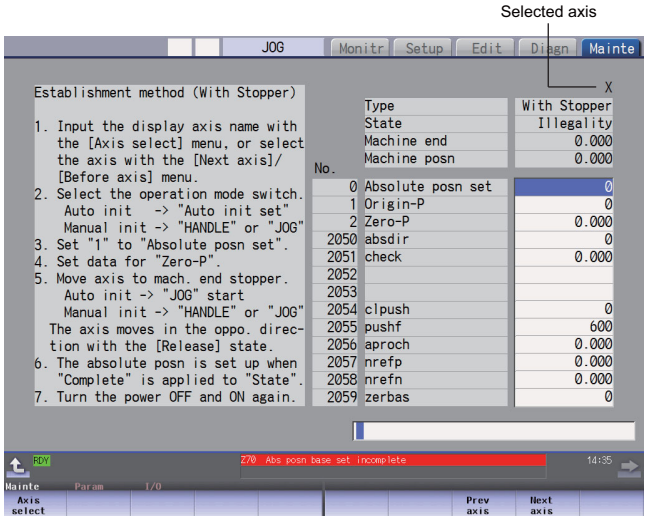

(4) Select "HANDLE" or "JOG" for the mode selection of machine operation switch.

(5) Confirm that the cursor is placed on "Absolute posn set", input "1" in the input area and press the [INPUT] key.

➡ The input value is registered in the "Absolute posn set" area.

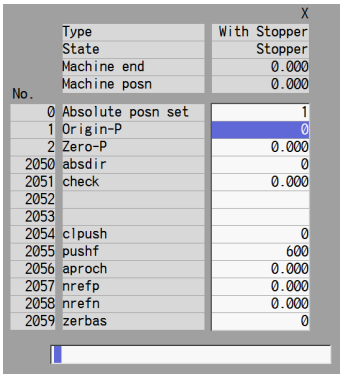

(6) When the parameter "#2059 zerbas" is set to "0", set "Zero-P" here. (*2)
Move the cursor to "Zero-P" with the [↑] and [↓] keys.
Input the distance from the basic machine coordinate zero point to the machine end stopper in the input area then press [INPUT].

➡ The input value is registered in the "Zero-P" area.

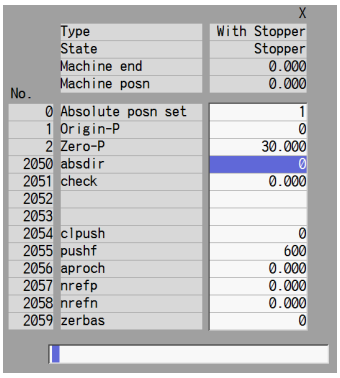

(7)	Press the axis against the machine end stopper.	➡	State: [Stopper] Machine end: Distance between the machine end stopper and the grid point immediately before the stopper
(8)	When the parameter "#2059 zerbas" is set to "0", the axis pushes against the machine end stopper and stops when the current reaches its limit.	➡	State: [Complete] Machine end: 0.000 Machine position: Current machine position
(9)	When the parameter "#2059 zerbas" is set to "1", the axis pushes against the machine end stopper, and the current reaches its limit, the axis reverses and moves at the pushing speed (#2055 pushf). Then the axis stops at the first grid point. Move the cursor to "Zero-P" with the [↑] and [↓] keys. Input the distance from basic machine coordinate system zero point to the grid point immediately preceding the machine end stopper then press [INPUT].	➡	State: [Complete] Machine end: Distance from the machine end stopper to position immediately preceding the grid point Machine position: Current machine position

The zero point initial setting is now complete. After initializing all axes, turn the power OFF and ON.

(*1) Low current limit value may prevent the basic movement of the axis. Do not set such a low value.
Set an appropriate value taking into account the acceleration torque and the friction torque.
When the current limit value is set too low, the servo error 3E (magnetic pole position detection error) may occur.

(*2) Depending on the setting value of the parameter "#2059 zerbas", the value set for "Zero-P" differ as shown in the following figure.

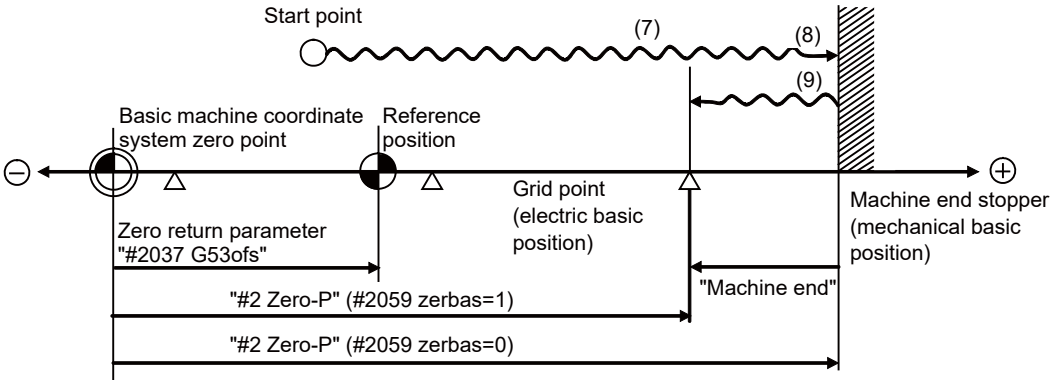

- (7) to (9) in this diagram indicate steps of the operation procedure.

(Note 1) To change just the basic machine coordinate zero point, set "#0 Absolute posn set" and "#2 Zero-P", and then turn the power OFF and ON.

(Note 2) If pressing against the machine end is attempted without passing the grip point once after turning the power ON, the operation message "Not passed on grid" will appear. Return to a point before the last grid, and then repeat from step of pressing against the machine end stopper.

(Note 3) If the first grid point is covered by the grid mask (#2028 grmask) as a result of return to the electric basic position in the step (9), the axis stops at the next grid point.
Note that reference position shift amount (#2027 G28sft) is invalid.

13.1.5 Grid-on Method

(1) Preparations
Set the parameters on the Abs pos param screen.
➡ #2049 type (absolute position detection method) : 5 (Grid-on method)
#2050 absdir (basic point of Z direction) : 0 or 1 (Direction of the nearest grid point)

(2) Turn the power OFF and ON.
(Only when "#2049 type" has been reset.)

(3) Move the axis, for which zero point is to be initialized, to the position just before the mechanical basic position (nearest grid point) using handle or manual feed.

(4) Change the operation mode to manual reference position return mode. Then turn ON either "+" or "-" of the "Feed axis selection" signal and move the axis in the direction of the mechanical basic position.
The travel speed of the axis is applied by the setting value of "#2026 G28crp" (G28 approach speed).

(5) When the axis reaches grid point, the axis stops and the position becomes the mechanical basic position. (Note 1) (Note 5)
The zero point of basic machine coordinate system is determined by the set value of "Zero-P" on the absolute position setting screen. (Select [Mainte] - [To Abs pos].)

When the procedures mentioned above are completed, the zero point is initialized. You need not turn the power OFF and ON again.

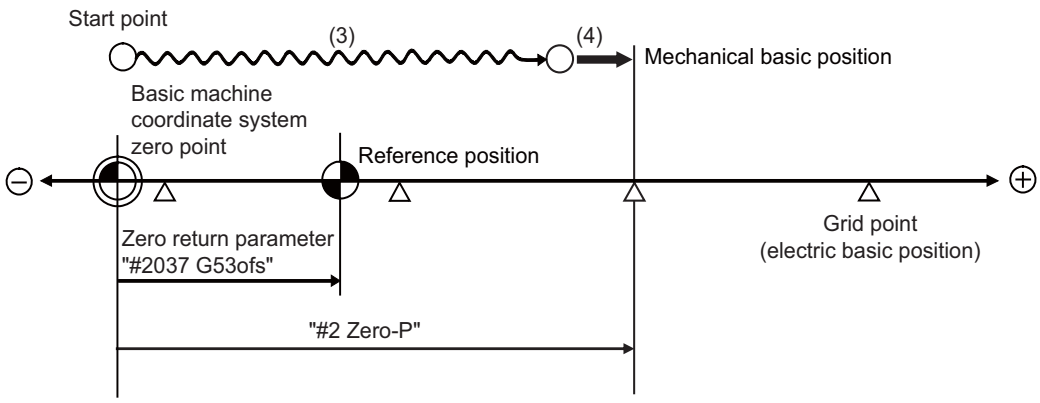

(Note 1) The zero point initialization by the grid-on method can be executed only when the absolute position is lost. If you perform the step (4) when the absolute position is established, the same operation as ordinary manual reference position return is performed.

(Note 2) To perform the zero point initialization by the grid-on method again when the absolute position has been established, set "1" to "#0 Absolute posn set" for the target axis on the absolute position setting screen and perform the steps (3) to (5).
When the zero point has been initialized, turn OFF the power of NC once. Until the power is turned OFF, each time the operation in step (4) is performed, positioning is performed at the nearest grid point and the zero point is initially set.

(Note 3) The direction of the nearest grid point to be positioned depends on the setting of the parameter "#2050 absdir" (Basic point of Z direction). Set the same direction to the "Feed axis selection" signal as the parameter setting. When the direction of the "Feed axis selection" signal is different from the parameter setting, the axis will not move. In this case, the operation error (M01 0003) appears.

(Note 4) The interval of the grid point is the value specified by the parameter "#2029 grspc" (Grid interval).

(Note 5) When the reference position shift distance (parameter "2027 G28sft") has been set, the axis stops at the point where the nearest grid point is shifted by the set distance, and the point becomes the mechanical basic position. If positive/negative of the set distance is different from the direction of the grid point (#2050 absdir), the axis will not move. In this case, the operation error (M01 0003) appears.

(Note 6) When the grid-on method is selected, the grid mask is disabled.

13.1.6 Dog-type

(1) Preparations
Set the parameters on the Abs pos param screen.

➡ #2049 type (absolute position detection method): 3 (dog-type)
The parameters for the approach speed and grid mask amount etc. need to be adjusted.

(2) Turn the power OFF and ON.
(Only when "#2049 type" is specified again.)

The following are the operations on the absolute position setting screen. (Select [Mainte] - [To Abs pos])

(3) Select an axis to set the absolute position.

There are two methods to select an axis.

- Select the menu [Axis select], enter the axis name in the input area then press [INPUT]. (For the axis name, input the name set to the parameter "#1022 axname2" (2nd axis name).)

- Press the menu [Prev axis] and [Next axis] to switch the axis.

➡

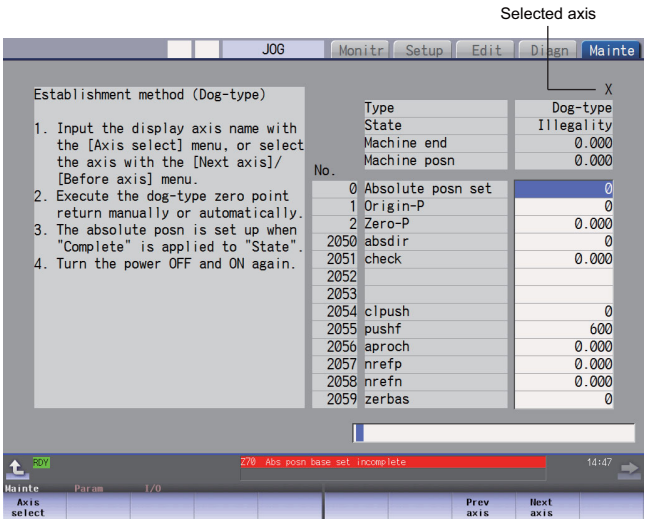

(4) Execute the manual or automatic dog-type zero point return.

➡ State: [Zero-P. Rel.]
Machine position: Current machine position

(5) The axis arrives at the zero point.

➡ State: [Complete]
Machine position: 0.000

The zero point initial setting is now complete. After initializing all axes, turn the power OFF and ON.

(Note 1) If the dog-type reference position return is interrupted by resetting, the previous state ("Complete" or "Illegality") will display in the [State] column.
(Note 2) With dog-type reference position return, reference position return can be executed again even if the [State] is "Complete".

13.1.7 Precautions Common for the Initialization Operation

(1) The "#0 Absolute posn set" parameter (axis for which zero point is to be initialized) can be set simultaneously for all axes or individually for each axis.
(2) The "#0 Absolute posn set" parameter cannot be turned OFF with the keys. It is turned OFF when the power is turned ON again.
(3) "#2 ZERO-P" can be set at any time as long as "#0 Absolute posn set" is set to "1".
(4) The grid point must be passed at least once after turning the power ON before initializing the zero point. If the grid point has not been passed, the operation message "Not passed on grid" will appear at the "Machine posn".
(5) When the absolute position is established, the required data will be stored in the memory.

13.1.8 Precautions Common for the Dogless-type Absolute Position Encoder

(1) Example of setting "#2 Zero-P" parameter

For the "#2 Zero-P" parameter, set the coordinate value of the absolute position origin point (mechanical basic position or electrical basic position" looking from the basic machine coordinate system zero point.

(Example 1) To set the zero point at 50.0mm before absolute position origin point on + end	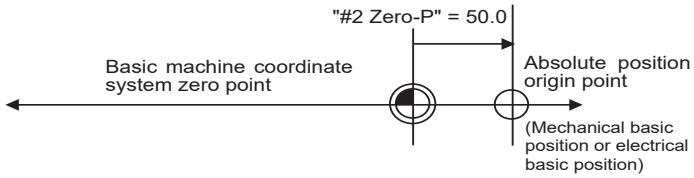
(Example 2) To set the zero point at 400.0mm before the machine basic position or absolute position origin point on - end.	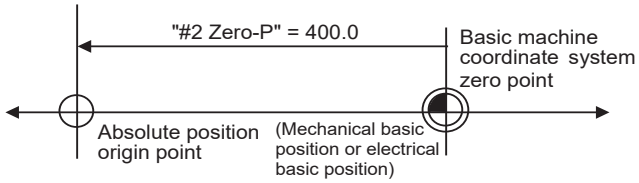
(Example 3) To set the basic machine coordinate system zero point on the grid point, calculate the "#2 Zero-P" parameter setting value as shown below using the value displayed at "Machine end". "Machine end" shows the distance from the mechanical basic position to the previous grid point. (Note that when setting the electrical basic position coordinate value in "#2 Zero-P", the "Machine end" value does not need to be considered.)	
To set the third gird point as the zero point when the "Machine end"display is -5.3 at the + end basic position. (Example of 10.0mm grid interval.)	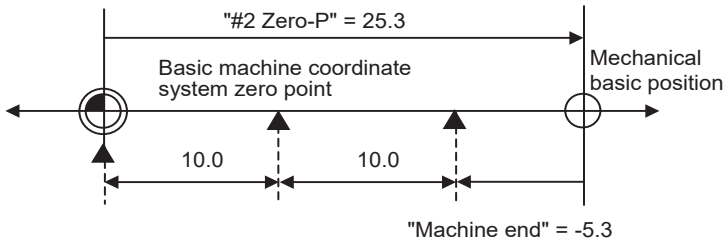

(2) Setting the reference position

The reference position can be set as shown below by setting the "#2037 G53ofs".

(Example 1) To set the reference position to the same position as the basic machine coordinate system zero point.	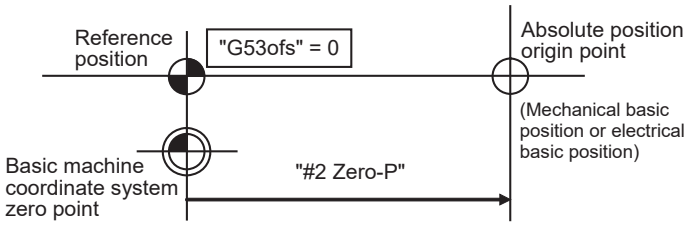
(Example 2) To set the reference position at a position 200.0mm to the + side from the basic machine coordinate zero point. (To set the basic machine coordinate system zero point 300.0mm front of the absolute position origin point.)	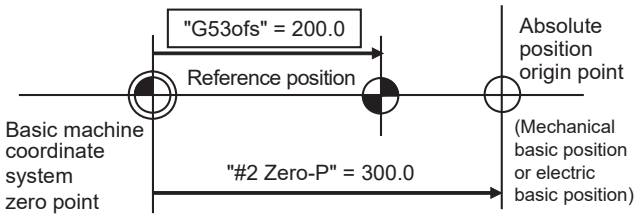

13.2 Adjustment of Reference Position Return in Relative Position Detection System

13.2.1 Dog-type Reference Position Return Operation

In the dog-type reference position return, the axis moves as follows:

(1) Starts moving at G28 rapid traverse rate.

(2) Decelerates to stop when the near-point dog is detected during the movement. Then, resumes moving at G28 approach speed.

(3) Stops at the first grid point after leaving the near-point dog.

This grid point, where the axis stopped at (3), is called the electrical zero point. Normally, this electrical zero point is regarded as the reference position.

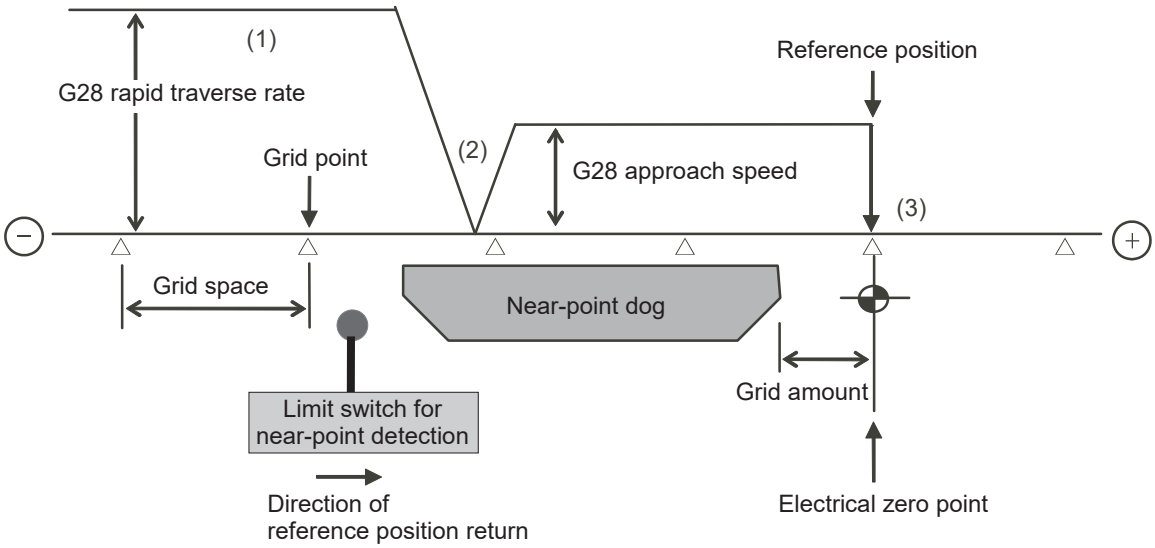

The first reference position return after turning the power ON is carried out with the dog-type reference position return. The second and following returns are carried out with either the dog-type reference position return or the high-speed reference position return, depending on the parameter.
High-speed reference position return is a function that directly positions to the reference position saved in the memory without decelerating at the near-point dog.

(Note) If reference position return has never been executed after turning the power ON and a movement command other than G28 is executed, the program error (P430) will occur.

13.2.2 Dog-type Reference Position Return Adjustment Procedures

Adjust the dog-type reference position return with the following steps.

(1) Select [Param] menu from the maintenance screen, and then select zero point parameter screen by pressing the page up/down keys.
The [zero point parameter] screen appears.

(2) Set the following parameters to "0" on the [zero point parameter] screen.
Reference position shift amount (#2027 G28sft)
Grid mask amount (#2028 grmask)

(3) Turn the power OFF and ON, and then execute reference position return.
(Note) Use the switches on the machine operation panel to command "reference position return mode" and operate the axis movement. The GOT project and the panel switches are made by the machine tool builder.

(4) Select [Drv mon] screen from the diagnosis screen, and display the drive monitor screen. Feed the page and check "Grid space" and "Grid amnt".

(5) Determine the grid mask amount according to the state as shown below.

■ When $\frac{\text{Grid space}}{2}$ is smaller than the grid amount

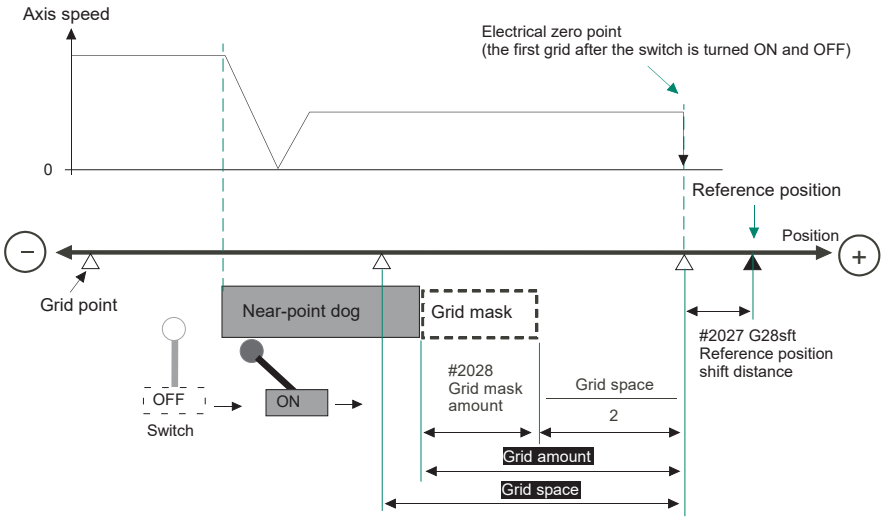

$$\text{Grid mask amount} = \left(\text{Grid amount} - \frac{\text{Grid space}}{2}\right)$$

■ When $\frac{\text{Grid space}}{2}$ is larger than the grid amount

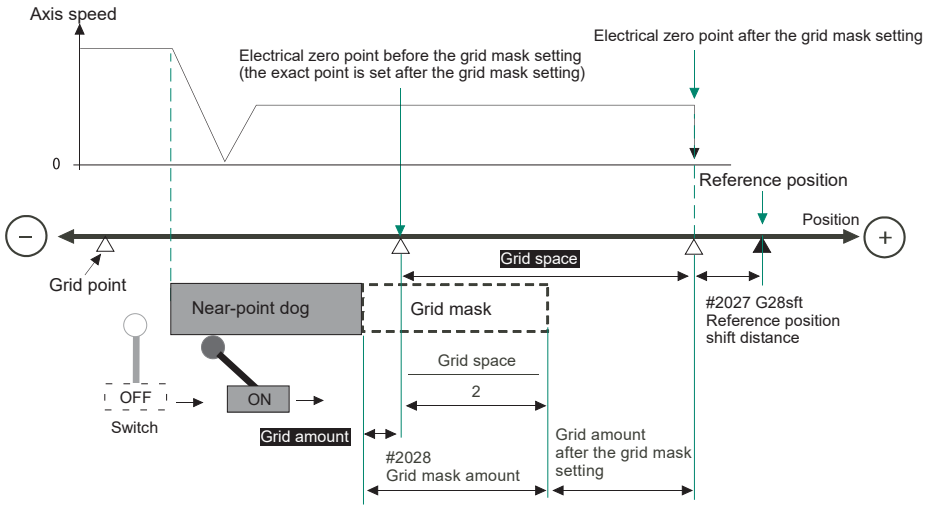

$$\text{Grid mask amount} = \left(\text{Grid amount} + \frac{\text{Grid space}}{2}\right)$$

(6) Set the determined grid mask amount for "#2028 grmask" of the [ZERO-RTN PARAM] screen.

(7) Turn the power OFF and ON, and then execute reference position return.

(8) Confirm the grid space and grid amount values on DRIVE MONITOR screen.
If the grid amount value is approximately half of the grid space, the grid mask amount has been set correctly. If the value is not approximately half, repeat the procedure from step (1).

(9) Set the reference position shift amount (#2027 G28sft).
To designate the electrical zero point as reference position, set "#2027 G28sft" to "0".

(10) Turn the power OFF and ON, and then execute the reference position return.
(Note) The axis moves at the speed of "#2025 G28rap G28 rapid traverse rate".
The parameter "#2025 G28rap G28 rapid traverse rate" is usually set the maximum speed, which makes the high-speed movement in the 2nd reference position return and later. Take extra care for the safe axis movement.

(11) Set the machine coordinate system offset amount (#2037 G53ofs).

[Terms and parameters related to the dog-type reference position return]

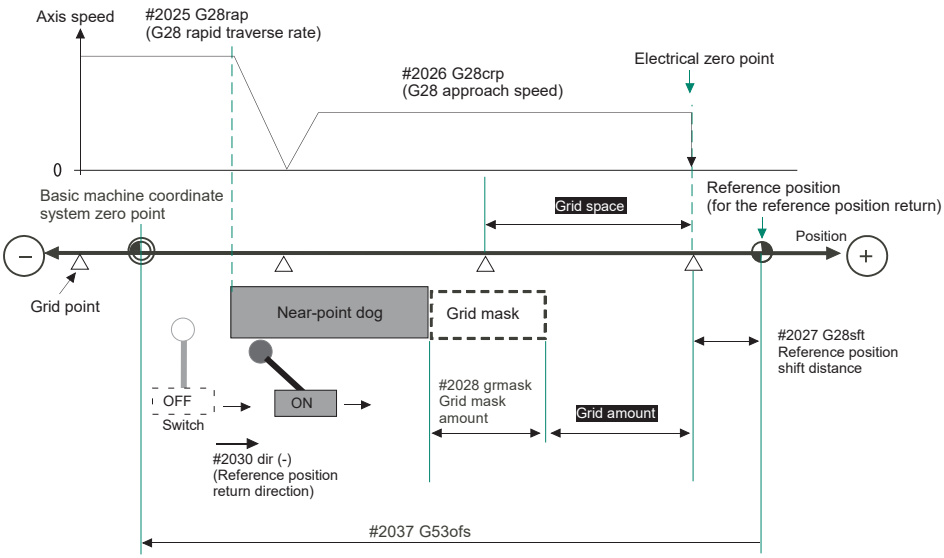

Electrical zero point
The first grid point after the dog OFF.
If the grid point is at the position where the near-point dog is kicked OFF, the position of electrical zero point may be at the grid point where the dog is kicked OFF or at the next grid point because of the delay of the limit switch operation. This causes a deviation of reference position by the amount of the grid space.
Setting the grid mask amount ("#2028 grmask") prevents this deviation.

Reference position
The base for position and coordinate.
The axis is positioned to this position by the manual reference position return command or G28 command in the machining program.
The position is determined by shifting from the electrical zero point by the amount of "#2027 G28sft Reference position shift amount".

Grid point
The position encoder has a Z-phase that generates one pulse per rotation. The 0-point position of this Z-phase is the grid point.
Thus, there is a grid point per rotation of the position encoder, and the machine has many grid points at a regular pitch.
The grid point can be set at intervals of grid space by setting the grid space (#2029 grspc). Thus, multiple grid points can be set per encoder rotation.

Grid amount
The grid amount is the distance from where the near-point detection limit switch leaves the near-point dog to the grid point (electrical zero point) as the dog-type reference position return is executed.
The grid amount can be confirmed on the DRIVE MONITOR screen.
After setting the grid mask, the grid amount shows the distance from the grid mask OFF to the grid point.

G28 rapid traverse rate (#2025 G28rap)
Set the feedrate for dog-type reference position return in manual operation and the automatic operation.
The rapid traverse rate (#2001 rapid) is applied for the feedrate during the high-speed reference position return.

G28 approach speed (#2026 G28crp)
Set the approach speed to the reference position after decelerating to a stop by the near-dog detection. Since the approach speed is accelerated and decelerated in steps (no-acceleration/deceleration), the mechanical shock, etc. could occur if the speed is too large. The G28 approach speed should be set between 100 and 300 mm/min., or within 500 mm/min. at the fastest.

Reference position shift amount (#2027 G28sft)
When shifting the reference position from the electrical zero point, set the shift amount.
The shifting direction can be set only in the reference position return direction.
If the reference position shift amount is "0", the grid point (electrical zero point) will be the reference position.

Grid mask amount (#2028 grmask)
The first grid point after the dog OFF is regarded as the electrical zero point.
If the grid point is at the position where the near-point dog is kicked OFF, the position of electrical zero point may be at the grid point where the dog is kicked OFF or at the next grid point because of the delay of the limit switch operation. This causes a deviation of reference position by the amount of the grid space. Thus, the position that the dog is kicked OFF needs to be at the approximate center of the grid space.
Adjustments are made by setting the grid mask amount or changing the near-point dog.
Setting the grid mask has the same effect as lengthening the near-point dog. Refer to the previous procedures for setting the grid mask amount.

Grid space (#2029 grspc)
Set the distance between grids.
Set either the ball screw pitch value (#2218 PIT) or the movement amount per motor rotation as the normal grid space.
To make the grid space smaller, set a divisor of the grid space.

<Calculation method for movement amount per motor rotation>

(1) When linear feed mechanism is a ball screw:
The movement amount per motor rotation = the motor side gear ration / the machine side gear ratio x the ball screw pitch

(2) When linear feed mechanism is a rack and pinion:
The movement amount per motor rotation = the motor side gear ration / the machine side gear ratio x number of pinion gear teeth x the rack pitch

(3) For the rotary axis:
The movement angle per motor rotation = the motor side gear ration / the machine side gear ratio x 360

Reference position return direction (#2030 dir (-))

The direction of the (axis) movement, after the dog-type reference position return is executed and the limit switch kicks the dog and decelerate to stop, is set to either positive "0" or negative "1".
Set "0" if the reference position is in the positive direction from the near-point dog.
Set "1" if the reference position is in the negative direction from the near-point dog.

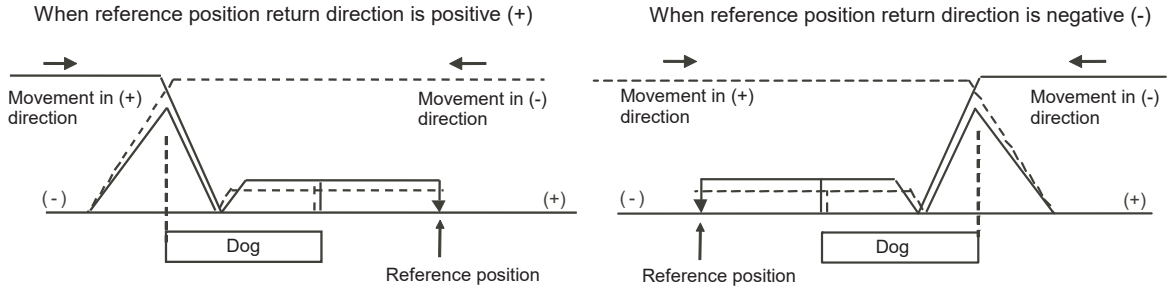

Axis with no reference position (#2031 noref)

Set the axis to carry out dog-type reference position return and the axis for absolute position detection to "0".
Set the axis without carrying out reference position return during the relative position detection to "1".

Machine coordinate system offset (#2037 G53ofs)

Set the amount to shift the basic machine coordinate system zero point position from the reference position.
When "0" is set, the reference position will be the position of the basic machine coordinate system zero point.
In "G53ofs" parameter, set the position of the reference position looking from the basic machine coordinate system zero point with the coordinates of basic machine coordinate system. By the reference position return after the power is turned ON, the machine position will be set and the basic machine coordinate system will be established.

Selection of grid display type (#1229 set01/bit6)

Select the grid display type on DRIVE MONITOR screen during dog-type reference position return.

0: Distance from dog OFF to electric zero point (including the grid mask amount)
1: Distance from dog OFF to electric zero point (excluding the grid mask amount)

14

Setting the Tool Entry Prohibited Range

Following functions are available for setting a tool entry prohibited range to detect over travels (OT).

(1) Stroke end
The axis movement is restricted by the signal that detects the stroke ends.

(2) Stored stroke limit
Prohibited ranges are set with parameters.

When stroke end is set, the axis will move the distance required to decelerate and stop after the limit switch is activated.
When stored stroke limit is set, the axis will stop before the prohibited range of the stored stroke limit including the deceleration distance.
For safety, set the stroke end and also, the stored stroke limit.

⚠ WARNING

Stroke end (H/W OT) and stored stroke limit (S/W OT) must always be set. If not, the tool may hit the machine end.

14.1 Stroke End

The axis movement is restricted by the signal that detects the stroke ends.
Signal device No. is allocated by the following parameters.
Parameter "#2074" and "#2075" will be valid only when "#1226 aux10/bit" is set to "1".

#1226 aux10/bit5: Set to "1" (assigning the dog signal is valid).
#2074 H/W OT+: Set the input device for assigning the OT (+) signal. (Setting range 0000 to 02FF (Hexadecimal))
#2075 H/W OT-: Set the input device for assigning the OT (-) signal. (Setting range 0000 to 02FF (Hexadecimal))

(Note 1) When "OT IGNORED" (R248) signal is set to ON, the stroke end signal associated with a specific control axis can be ignored.

(Note 2) When parameter "#1226 aux10/bit5" is set to "1", do not set the same device No. to #2073 to #2075.
Setting the same device No. may cause the emergency stop. However, the device number will not be checked for the axis which is set the signal to ignore (R248,R272).

14.2 Stored Stroke Limit

14.2.1 Outline

Three tool entry prohibited ranges can be set with stored stroke limit I, stored stroke limit II, IIB and stored stroke limit IB.
Part of the prohibited range on the outside of stored stroke limit I can turn into a moveable range with stored stroke limit IC.
Set the parameters to select the entry prohibited range, stored stroke limit II or IIB.
(II: Prohibits entering outside the range IIB: Prohibits entering inside the range)

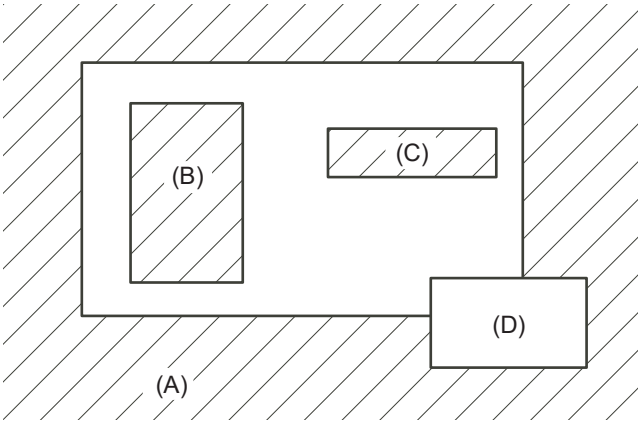

: Moveable range

: Prohibited range

(A): Prohibited range by stored stroke limit I
(B): Prohibited range by stored stroke limit IIB
(C): Prohibited range by stored stroke limit IB
(D): Moveable range by stored stroke limit IC

If the axis is moving over the set range, an alarm will appear and the axis will decelerate to a stop.
If the prohibited range is entered and an alarm occurs, movement will be possible only in the direction opposite the entry direction.

Valid Conditions of Stored Stroke Limit

When using the relative position detection system, the stored stroke limit is invalid until the reference position return is completed after the power is turned ON.
The stored stroke limit can be validated even if the reference position return is not yet completed, by setting "#2049 type (Absolute position detection method)" to "9".

(Note) If the absolute position detection is valid when using the absolute position detection system, the stored stroke limit will be validated immediately after the power is turned ON.

Stored Stroke Limit Coordinates

The stored stroke limit check is carried out in the basic machine coordinate system established by the reference position return.
When the stored stroke limit has been validated while the reference position return has not been completed, the stored stroke limit check is executed with the basic machine coordinate system at the time of last power-OFF as temporary one.
When the 1st dog-type reference position return is completed after the power is turned ON, the proper coordinate system is established.

(Note) While the reference position return has not been completed, only the manual and handle feed mode allow the axis movement. Automatic operation is validated after the reference position return is completed.

⚠ **CAUTION**

Always set the stored stroke limit. Failure to set this could result in collision with the machine end.

The stored stroke limits I, II, IIB, IB and IC are handled as follows.

Type	Prohibited range	Description		Range setting parameters	Validating conditions
I	Outside	- Set by the machine tool builder. - When used with II, the confined range designated by the two functions becomes the movement valid range.		"#2013 OT - (Soft limit I -)" "#2014 OT + (Soft limit I +)"	- Reference position return is completed. - #2013 and #2014 are not set to the same value.
II	Outside	- Set by the user. - Select II or IIB with the parameters.	- "#8210 OT-INSIDE" = "0" - Used with I.	"#8204 OT-CHECK-N" "#8205 OT-CHECK-P"	- Reference position return is completed. - #8204 and #8205 are not set to the same value. - "#8202 OT-CHECK OFF" = "0"
IIB	Inside		- "#8210 OT-INSIDE" = "1"		
IB	Inside	- Set by the machine tool builder.		"#2061 OT_1B- (Soft limit IB-)" "#2062 OT_1B+ (Soft limit IB +)"	- Reference position return is completed. - #2061 and #2062 are not set to the same value.
IC	Outside	- Set by the machine tool builder.		"#2061 OT_1B- (Soft limit IB-)" "#2062 OT_1B+ (Soft limit IB +)"	- Reference position return is completed. - #2061 and #2062 are not set to the same value. - "#2063 OT_1Btype (Soft limit IB type)" = "2"

- The stroke check will not be executed when both maximum and minimum value are set to the same value.
- This function is valid after the reference position return if the system does not apply the absolute position detection system.
- Before the machine enters the prohibited range, an error "M01 Operation error 0007" (S/W stroke end) will occur, and the machine movement will stop. The alarm can be reset by moving the erroneous axis in the opposite direction.
- During automatic operation, if an alarm occurs with even one axis, all axes will decelerate to a stop.
- During manual operation, only the axis that caused the alarm will decelerate to a stop.
- The axis will always stop at a position before the prohibited range.
- The distance between the prohibited range and stop position will depend on the feedrate, etc.

14.2.2 Stored Stroke Limit I

This is a stroke limit function used by the machine tool builder. The boundary is set with the parameters ("#2013 OT - (Soft limit I -)" and "#2014 OT + (Soft limit I +)"). The outside of the set boundary is the prohibited range. The outside of the set boundary is the prohibited range.
When used with the stored stroke limit II function, the confined range designated by the two functions becomes the moveable range.

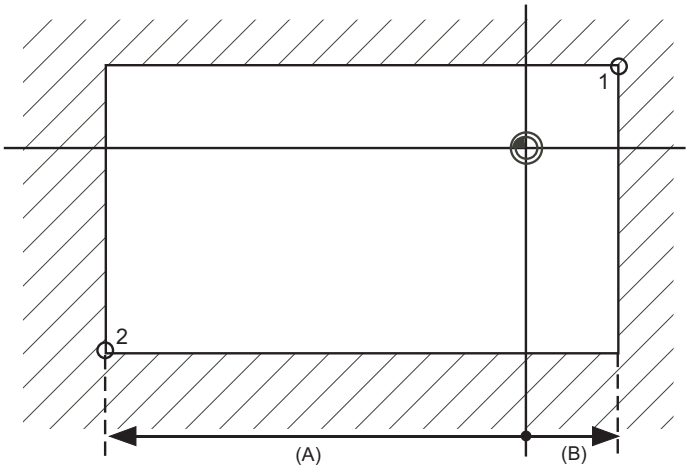

: Moveable range

: Prohibited range

(A): Set value for (-) side
(B): Set value for (+) side
Point 1: "#2014 OT+ (Soft limit I +)" and
Point 2: "#2013 OT- (Soft limit I -)" are set with the coordinate values in the basic machine coordinate system.

(Note 1) This function will be invalid if the same value excluding "0" is set for both "#2013 OT -" and "#2014 OT +".

14.2.3 Stored Stroke Limit II

The boundary is set with the axis parameters "#8204 OT-CHECK-N" and "#8205 OT-CHECK-P" or with program commands. Either the inside or the outside of the set boundary is the prohibited range. Whether the inside or outside of the range is prohibited is determined by "#8210 OT-INSIDE". When the inside is selected, this function is called stored stroke limit IIB.

When using program commands, entry of the tool into the prohibited range is prohibited with G22, and entry into the prohibited range is enabled with G23. The stored stroke limit II can be invalidated for each axis with setting "#8202 OT-CHECK OFF" to "1".

Prohibited range

X: Outside Z: Outside X: Inside Z: Outside X: Inside Z: Inside

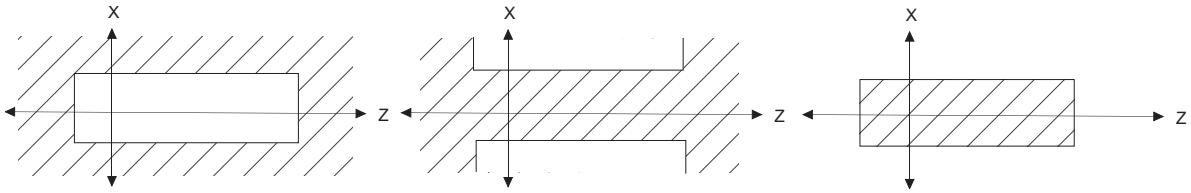

: Moveable range

: Prohibited range

(1) Stored stroke limit II (When prohibited range is on outside)

When used with the stored stroke limit I function, the narrow range designated by the two types becomes the movement valid range.

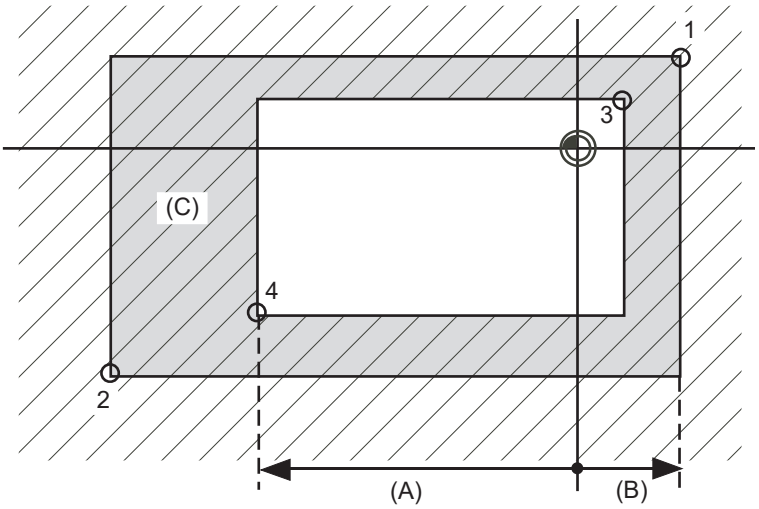

: Moveable range

: Prohibited range

(A): Set value for (-) side

(B): Set value for (+) side

(C): Prohibited range by stored stroke limit II

Point 3: "#8205 OT-CHECK-P" and

Point 4: "#8204 OT-CHECK-N" are set with the coordinate values in the basic machine coordinate system.

Points 1 and 2 are the prohibited range set with stored stroke limit I.

(2) Stored stroke limit IIB (When prohibited range is on inside)

A range except for that of the stored stroke limit I becomes the movement prohibited range.

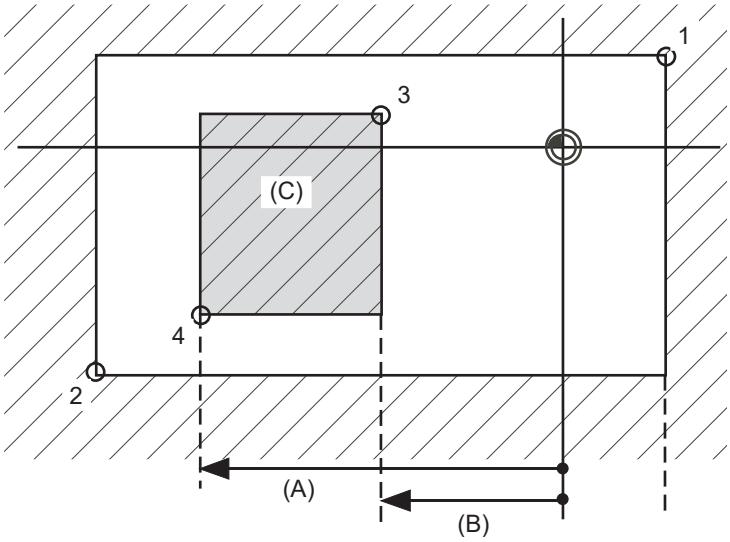

: Moveable range

: Prohibited range

(A): Set value for (-) side

(B): Set value for (+) side

(C): Prohibited range by stored stroke limit IIB

Point 3: "#8205 OT-CHECK-P" and

Point 4: "#8204 OT-CHECK-N" are set with the coordinate values in the basic machine coordinate system.

Points 1 and 2 are the prohibited range set with stored stroke limit I.

14.2.4 Stored Stroke Limit IB

The boundary is set for each axis with the axis parameters "#2061 OT_1B-" and "#2062 OT_1B+". The inside of the set boundary is the prohibited range.

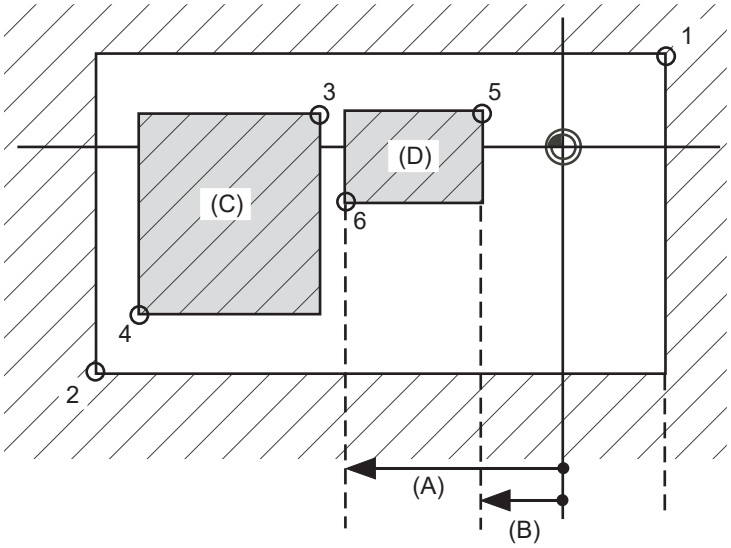

: Moveable range

: Prohibited range

Point 5: "#2062 OT_1B+ (Soft limit IB+)" and
Point 6: "#2061 OT_1B- (Soft limit IB-)" are set with the coordinate values in the basic machine coordinate system.
(A): Set value for (-) side
(B): Set value for (+) side
(C): Prohibited range by stored stroke limit II
(D): Prohibited range by stored stroke limit IB
Points 1 and 2 are the prohibited range set with stored stroke limit I.
Points 3 and 4 are the prohibited range set with stored stroke limit IIB.

14.2.5 Stored Stroke Limit IC

The boundary is set for each axis with the axis parameters "#2061 OT_1B-" and "#2062 OT_1B+". The inside of the set boundary is the machine movement valid range.
This is valid when the axis parameter "#2063 OT_1Btype (Soft limit IB type)" is set to "2". Cannot be used with soft limit IB.

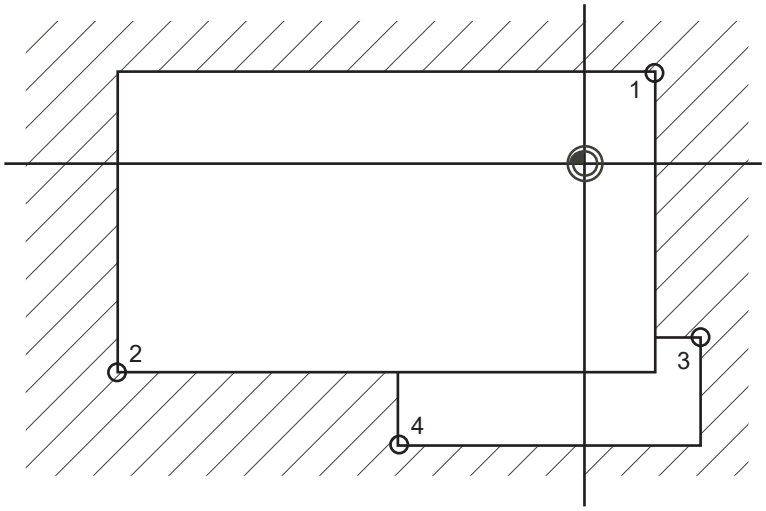

: Moveable range

: Prohibited range

Point 3: "#2062 OT_1B+ (Soft limit IB+)" and
Point 4: "#2061 OT_1B- (Soft limit IB-)" are set with the coordinate values in the basic machine coordinate system.
Points 1 and 2 are the prohibited range set with stored stroke limit I.

14.2.6 Movable Range during Inclined Axis Control

By setting "#2063 OT_1Btype" to "3", the inclined axis control axis can be checked with the program coordinates using the stored stroke limit IB/IC range setting ("#2061" and "#2062"). The stored stroke limit IB and IC cannot be used together at this time.
By using this function with stored stroke limit I, the check can be carried out simultaneously with the actual axis and program coordinate value. In this case, the range that does not fit into either of the following two prohibited ranges will be the movable range.

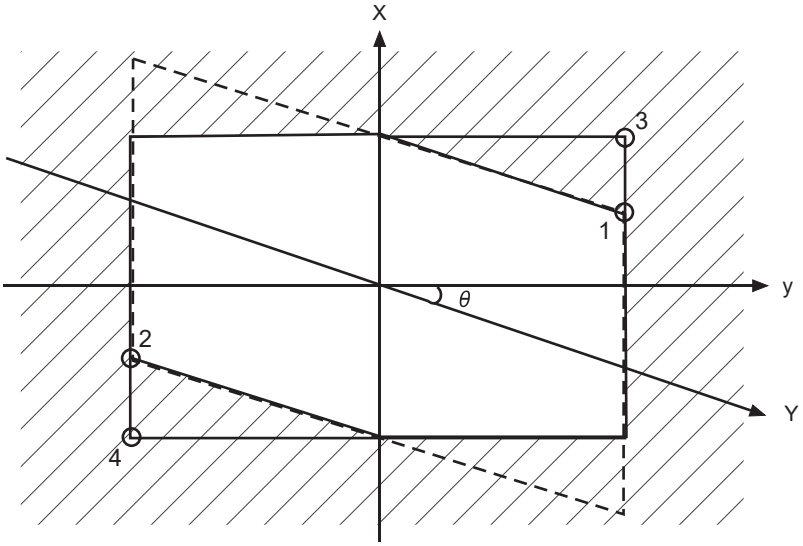

: Moveable range

: Prohibited range

Point 3: "#2062 OT_1B+ (Soft limit IB+)" and
Point 4: "#2061 OT_1B- (Soft limit IB-)" are set with the coordinate values in the basic machine coordinate system.
Points 1 and 2 are the prohibited range set with stored stroke limit I.

14.2.7 Stored Stroke Limit for Rotation Axis

Stored stroke limits I and II are used as the stored stroke limit for the rotation axis. The area between the maximum and minimum values of the prohibited range's parameters, which does not contain the 0 point of the basic machine coordinate system, is the entry prohibited range.
The prohibited range parameters for the rotation axis can be set to establish "maximum value < minimum value"("#2014 OT+" < "#2013 OT-", "#8205 OT-CHECK-P" < "#8204 OT-CHECK-N"). This will be handled in the same manner as if "maximum value > minimum value"("#2014 OT+" > "#2013 OT-", "#8205 OT-CHECK-P" > "#8204 OT-CHECK-N").

(Example) Stored stroke limit I (maximum value and minimum value of prohibited range parameter)
#2013 OT -: -70.000°
#2014 OT +: 60.000°
Stored stroke limit II (maximum value and minimum value of prohibited range parameter)
#8204 OT-CHECK-N: 30.000°
#8205 OT-CHECK-P: 80.000°

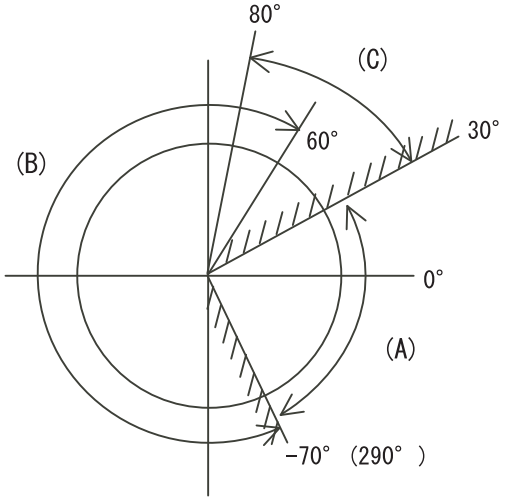

(A): Moveable range
(B): Prohibited range by stored stroke limit I
(C): Prohibited range by stored stroke limit II

(Note) Do not use stored stroke limits IB, IIB or IC. Invalidate stored stroke limits IB, IIB and IC by setting the parameters as shown below.
#8210 OT INSIDE: 0 (stored stroke limit II valid, IIB invalid)
#2061, #2062 set to same value (stored stroke limits IB and IC invalid)

14.2.8 Changing the Area for the Stored Stroke Limit I

The range of the stored stroke limit I can be changed to the value set to R register for each axis. When "Stored stroke limit I change request" signal is turned ON, the range of stored stroke limit changes. Changing the area for the stored stroke limit I is also possible during automatic operation. Also, the current settings for the stored stroke limit I can be checked by with the R register values.
Refer to "PLC Programming Manual" and "PLC Interface Manual" for details.

14.2.9 Precautions

(1) If the maximum value and minimum value of the stored stroke limit's prohibited range are set to the same value, the following will occur.
  (a) When the maximum value and minimum value are set to "0", if the outside is the prohibited range, the entire range will be prohibited. If the inside is the prohibited range, the entire range will be the moveable range.
  (b) If data other than 0 is set for the maximum value and minimum value, the entire range will be the moveable range.

(2) The stored stroke limit IC is valid when the axis parameter #2063 is changed. If changed during automatic operation, the function will be validated after the smoothing for all axes reaches 0.

(3) Make sure that the lower limit value of the stored stroke limit IC setting value is "smaller than the upper limit value".

(4) To set the inside of the specified range as a prohibited range, set the parameters as follow:
EX. There are 2 methods to set 10° to 70° as a prohibited range.
[Method 1]
Set "70" to parameter "#2013 OT-" and "370" to parameter "#2014 OT+".
[Method 2]
Set "370" to parameter "#2013 OT-" and "70" to parameter "#2014 OT+".

15

Setting the Machine Error Compensation

15.1 Memory-type Pitch Error Compensation/Memory-type Relative Position Error Compensation

15.1.1 Outline

(1) Memory-type pitch error compensation

According to the specified parameters, this method compensates an axis feed error caused by a ball screw pitch error, etc.

You can set compensation amount for each division point obtained by equally dividing the machine coordinates based on the reference position. (See the figure below.)

The compensation amount can be set by either the absolute or incremental amount method. Select the method with "#4000 Pinc".

Machine position between division points "n" and "n+1" is smoothly compensated by the linear approximation of the compensation amount.

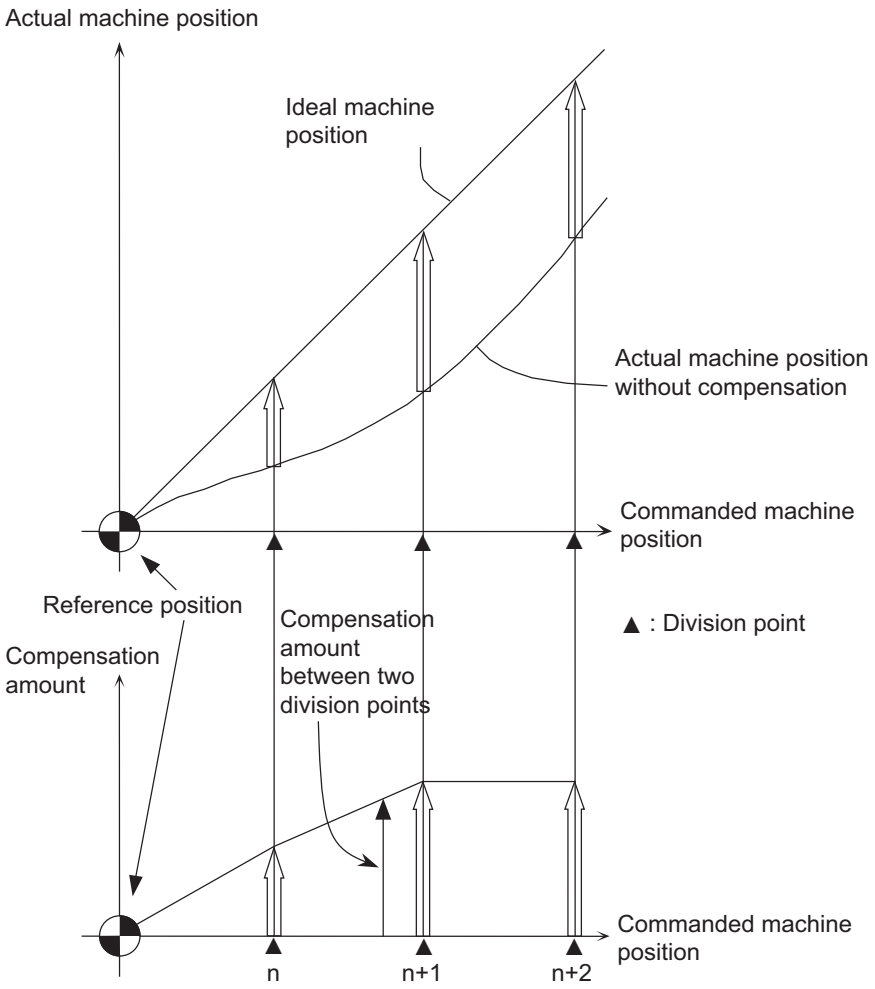

Relationship between the compensation amount and machine position

(2) Memory-type relative position error compensation

This function compensates the relative position error between two orthogonal axes caused by deflection of the moving according to the specified parameters.

You can set compensation amount in the compensated axis direction for each division point obtained by equally dividing the machine coordinates of the basic axis. (See the figure below.)

"Basic axis" refers to the one axis of two orthogonal axes on which relative position compensation is made. This axis is used as the criterion for relative-error measurement. "Compensation axis" refers to the coordinate axis that is orthogonal to the basic axis. The compensation is actually made for this coordinate axis.

Machine position between division points "n" and "n+1" is smoothly compensated by the linear approximation of the compensation amount.

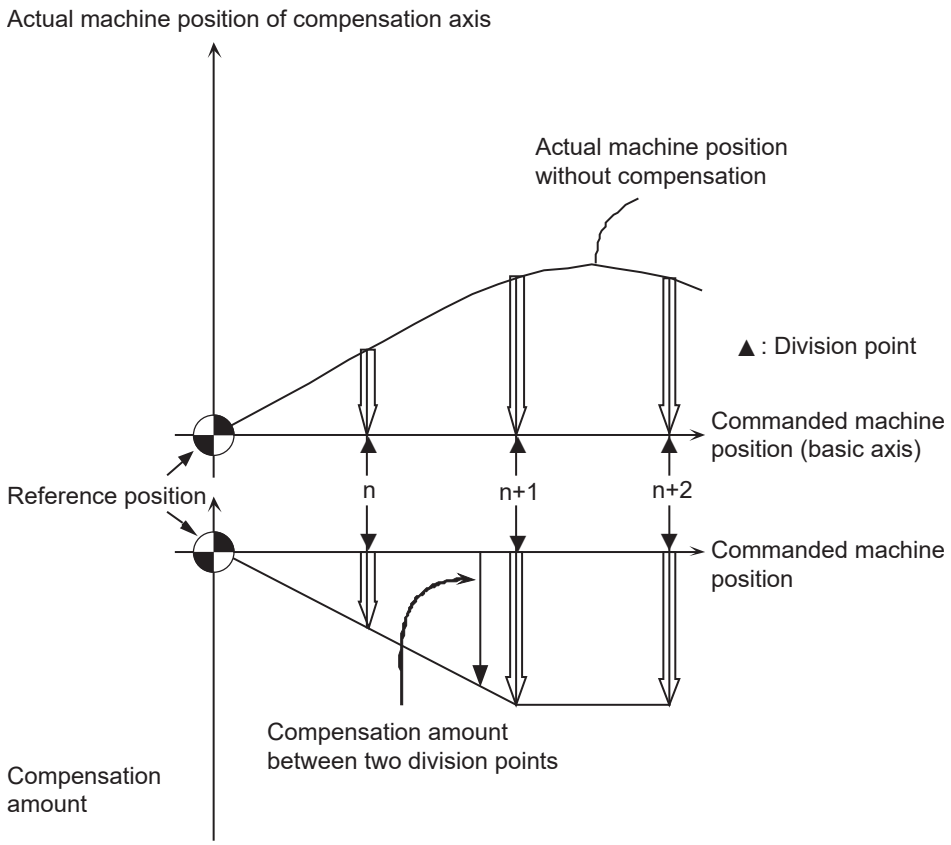

Relationship between the compensation amount and machine position

15.1.2 Setting Compensation Data

There are two methods for setting the compensation data: absolute amount method and incremental amount method.

"#4000 Pinc" 0 : Absolute amount method
1 : Incremental amount method

(1) Absolute amount method

When you feed an axis from the reference position to each division point, calculate and set the compensation amount using the following formula.

Compensation amount = (Commanded position - Actual machine position) × 2

The unit of compensation amount depends on the setting of machine error compensation unit (parameter "#1006 mcmpunit").

The following shows examples when the parameter #1006 is set to "B".

(Example 1) Feeding an axis from the reference position to the position moved by +100 mm (See the left figure below.)
When the actual machine position is 99.990 mm, the compensation amount at the position moved by +100 mm is "20".
(100000 - 99990) × 2 = 20

(Example 2) Feeding an axis from the reference position to the position moved by -100 mm (See the right figure below.)
When the actual machine position is -99.990 mm, the compensation amount at the position moved by -100 mm is "-20".
(-100000 - (-99990)) × 2 = -20

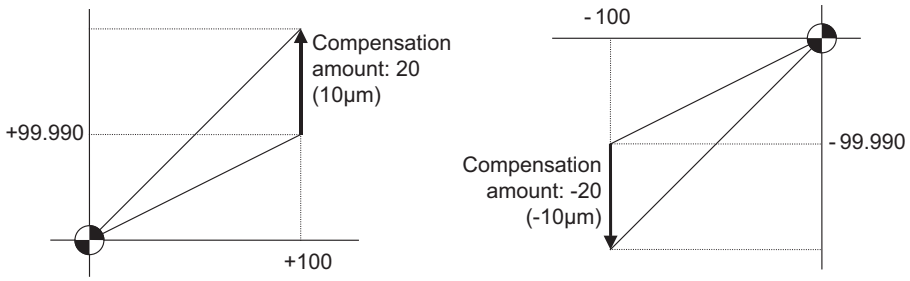

(2) Incremental amount method

The compensation amount at the division point "n" is calculated for the axis that moves by "interval between division points" specified with #4007. The formula for calculating the compensation amount differs depending on whether the division point "n" is on the positive side or the negative side from the reference position.

[On the positive side]

Actual travel amount = (Actual machine position of division point "n")
- (Actual machine position of division point "n-1") (See the left figure below.)

Compensation amount = (Interval between division points - Actual travel amount) × 2

[On the negative side]

Actual travel amount = (Actual machine position of division point "n")
- (Actual machine position of division point "n+1") (See the left figure below.)

Compensation amount = (Interval between division points + Actual travel amount) × 2

In both cases, the unit of compensation amount depends on the setting of the machine error compensation unit (parameter "#1006 mcmpunit").

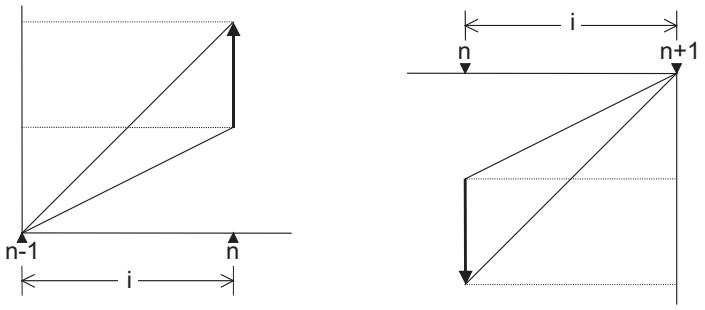

n : Division point compensation number
i : Division interval

Unit of compensation amount : Machine error compensation unit (#1006)
Range of compensation amount : -128 to 127

15.1.3 Setting Method

15.1.3.1 Using a Linear Axis as Basic Axis

(1) When "mdvno" or "pdvno" exists at both ends of "rdvno"

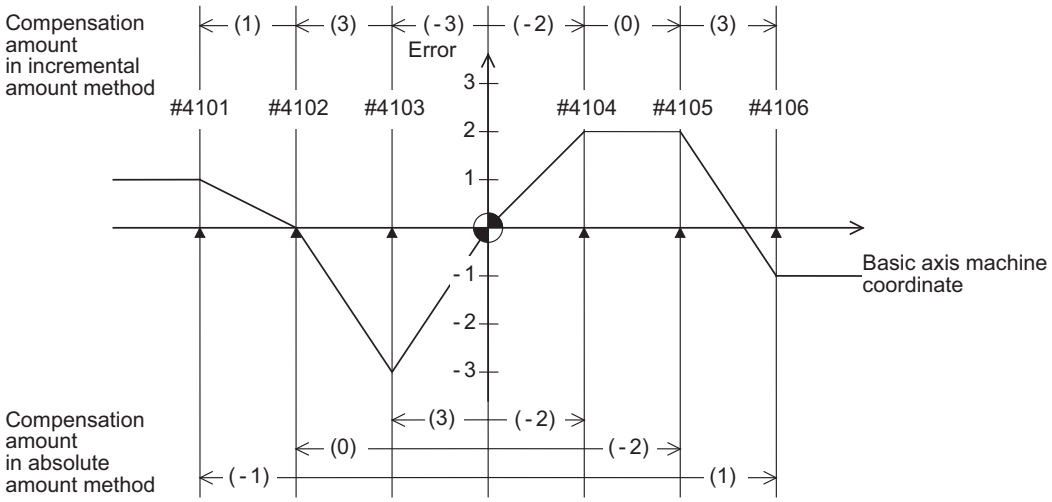

Division point number		#4101	#4102	#4103	#4104	#4105	#4106		rdvno	4103
Specified machine position		-300.000	-200.000	-100.000	100.000	200.000	300.000		mdvno	4101
Real machine position		-299.999	-200.000	-100.003	100.002	200.002	299.999		pdvno	4106
Compensation amount	Incremental amount method	2	6	-6	-4	0	6		spcdv	100.000
	Absolute amount method	-2	0	6	-4	-4	2			

The compensation beyond the setting range ("mdvno" to "pdvno") will be based on the compensation amount at "mdvno" or "pdvno".

(2) When the range compensated is only the positive range

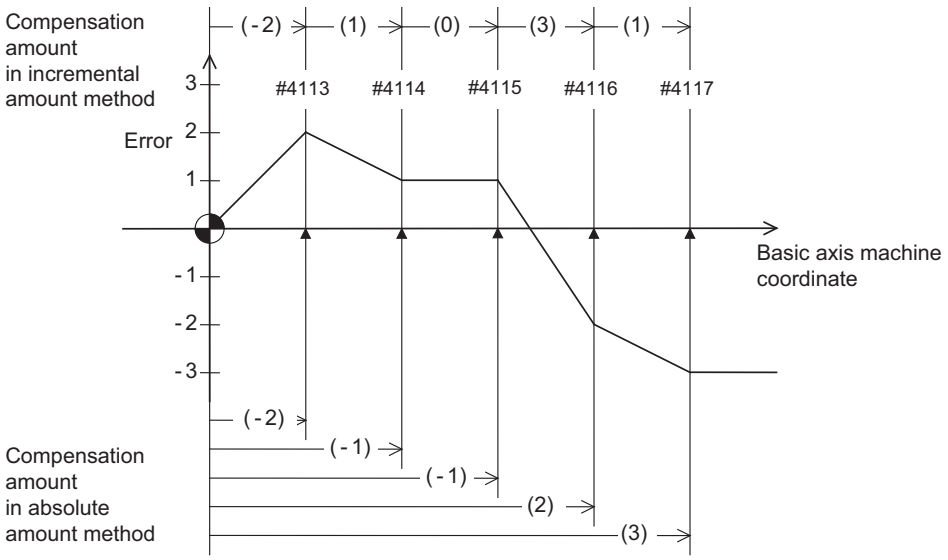

Division point number		#4113	#4114	#4115	#4116	#4117		rdvno	4112
Compensation amount	Incremental amount method	-4	2	0	6	2		mdvno	4113
	Absolute amount method	-4	-2	-2	4	6		pdvno	4117

When the machine position is beyond "pdvno", the compensation will be based on the compensation amount at "pdvno". If the machine position is on the negative side in this case, no compensation will be executed.

(3) When the range compensated is only the negative range

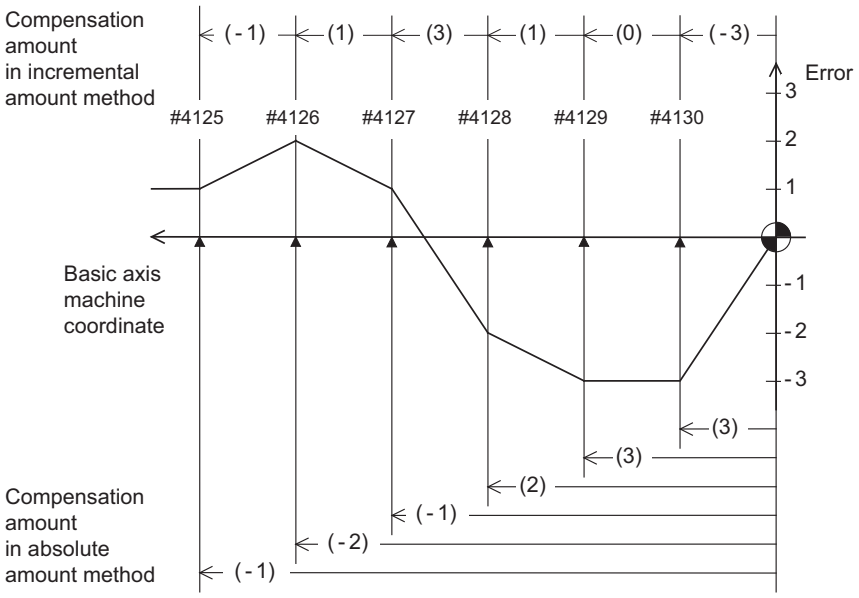

Division point number		#4125	#4126	#4127	#4128	#4129	#4130		rdvno	4130
Compensation amount	Incremental amount method	-2	2	6	2	0	-6		mdvno	4125
	Absolute amount method	-2	-4	-2	4	6	6		pdvno	4130

When the machine position is beyond "mdvno", the compensation will be based on the compensation amount at "mdvno".

(4) When compensation is executed in a range that contains no reference position

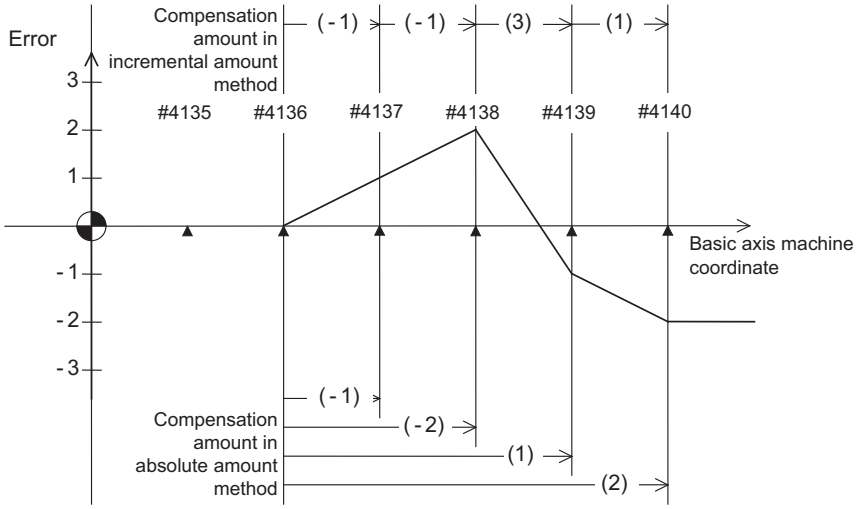

Division point number		#4135	#4136	#4137	#4138	#4139	#4140		rdvno	4134
Compensation amount	Incremental amount method			-2	-2	6	2		mdvno	4136
	Absolute amount method			-2	-4	2	4		pdvno	4140

In this case, the compensation is executed in the range from "mdvno" to "pdvno".
This setting is also applied to the compensation executed in an range in which a machine position is negative and a reference position is not included.

15.1.3.2 Using a Rotary Axis as Basic Axis

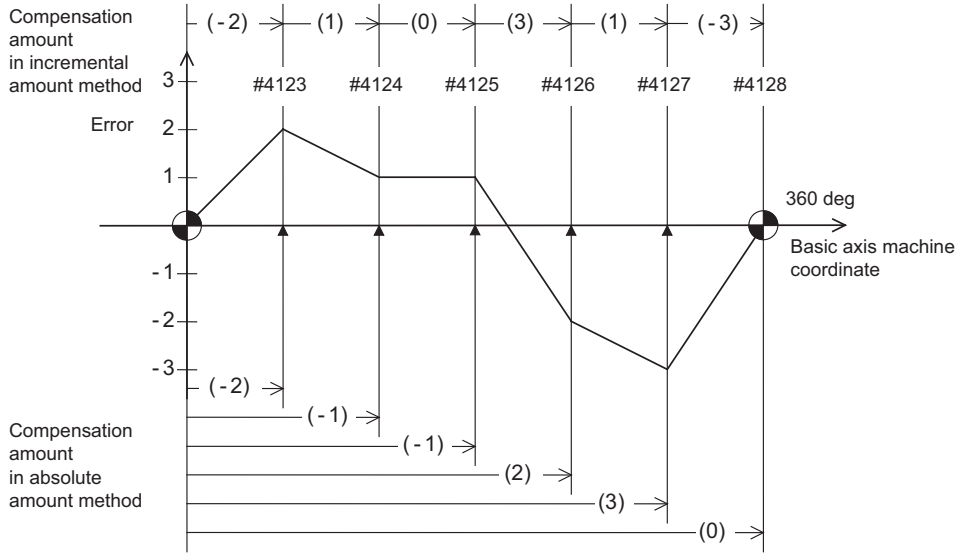

Division point number		#4123	#4124	#4125	#4126	#4127	#4128		rdvno	4122
Compensation amount	Incremental amount method	-4	2	0	6	2	-6		mdvno	4123
	Absolute amount method	-4	-2	-2	4	6	0		pdvno	4128

The sum of the compensation amounts set with the incremental amount method is always "0".

In the absolute amount method, the compensation amount at the terminal point (360 degrees) is always "0".

15.2 Bidirectional pitch error compensation

15.2.1 Outline

Compensation amounts can be set respectively for the movement in positive and negative directions, and compensation can be made for each direction. This method will reduce the difference between the path in the positive direction and path in the negative direction.
You can set the compensation amount for each division point obtained by equally dividing the machine coordinates based on the reference position. (See the figure below.)
The compensation amount can be set by either the absolute or incremental amount method. Select the method with "#4000 Pinc".
Machine position between division points "n" and "n+1" is smoothly compensated by the linear approximation of the compensation amount.

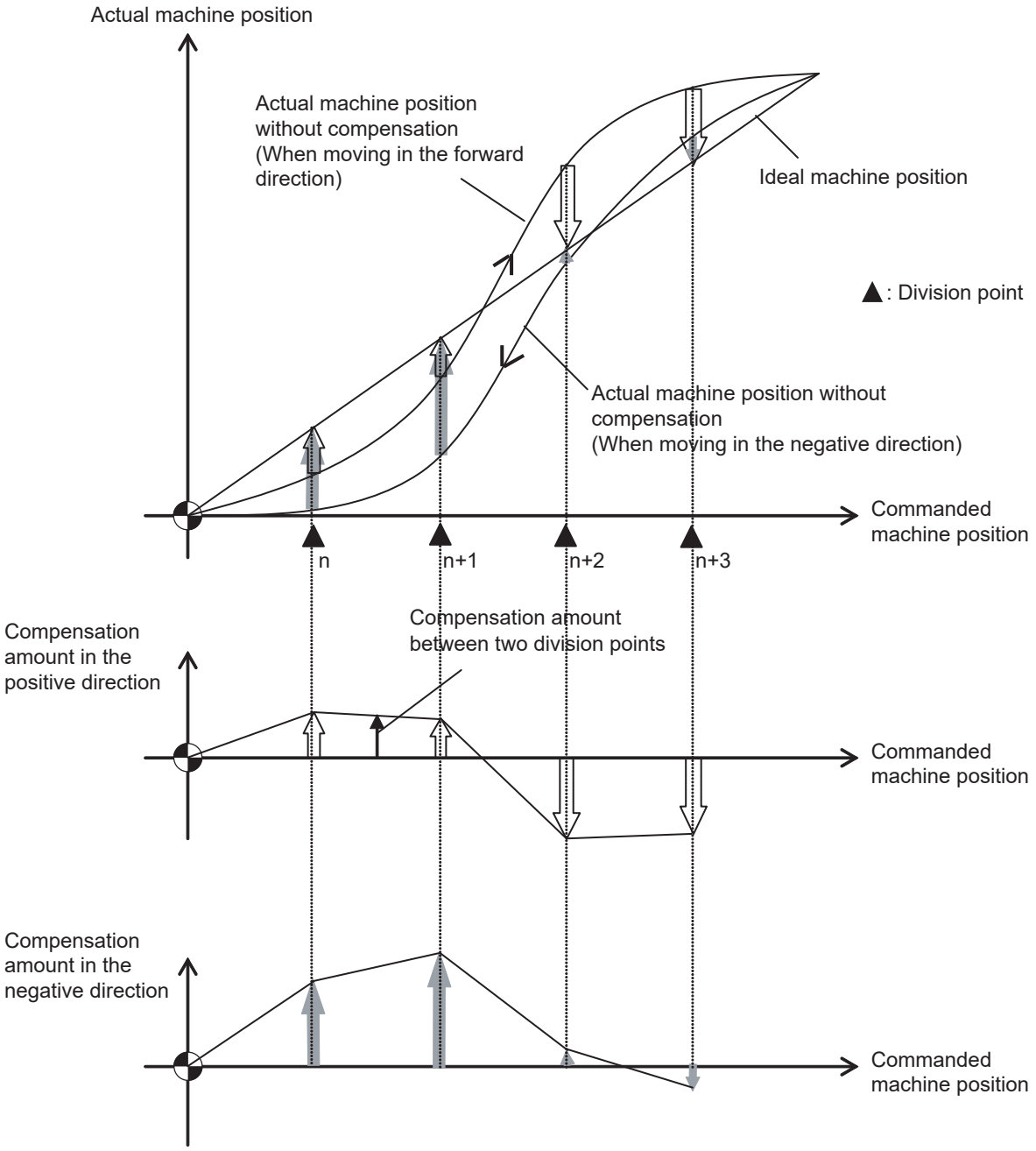

Relationship between the compensation amount and machine position

15.2.2 Setting Method

15.2.2.1 When the basic axis is a linear axis

This section describes how to set bidirectional pitch error data by taking the linear axis having a pitch error such as illustrated below as an example.

Allocating compensation No.

As shown in the figure below, compensation range is divided into equal intervals based on the reference position, and compensation data Nos. are allocated for each movement in positive and negative directions.
For both positive and negative directions, numbers are allocated from the division point on the most negative side toward the positive side. (The figure shows an example of allocating #4101 to # 4106 in the positive direction and #4107 to #4112 in the negative direction.)
No compensation data No. is allocated to the reference position.

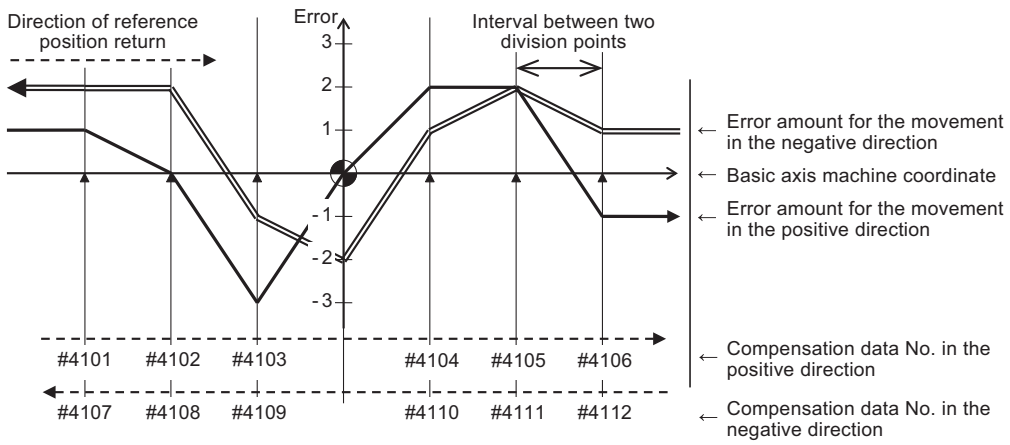

Bidirectional pitch error (linear axis)

Make sure to allocate the same number of compensation data to division points for positive and negative directions. When the odd number of compensation data are set, compensation points allocated to the positive direction become one point less than that of the negative direction. For example, in the following figure, the division point indicated with "(None)" has no allocated compensation No. Accordingly, the compensation data of the previous compensation No. (#4105) is also used for the division point indicated with "(None)".

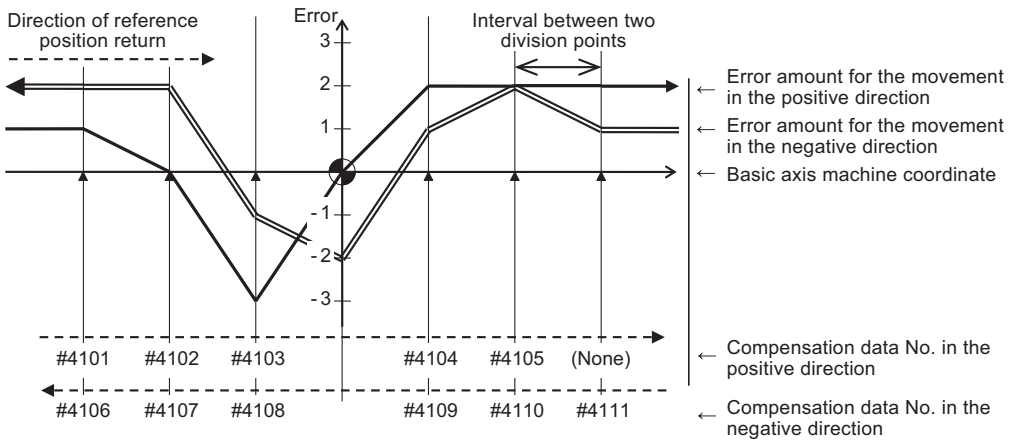

Bidirectional pitch error having odd number of compensation points (linear axis)

Setting parameters

(1) Set setting method for compensation amount to "#4000 Pinc".

#4000 setting value	Setting method
0 (absolute amount method)	This method sets the difference between the commanded position and the actual machine position of each division point as the compensation amount.
1 (incremental amount method)	This method sets the difference between the commanded travel amount and the actual travel amount when the axis moved from the adjacent division point as the compensation amount.

(2) Set the axis name to be compensated to "#4001 cmpax". Set the same axis name to "#4002 drcax" as well.

(3) Among the division points in the positive direction, set the compensation No. of the division point which is one point far from the reference position in the negative direction to "#4003 rdvno".

(4) Set the first and the last compensation Nos. allocated to division points to the parameters "#4004 mdvno" and "#4005 pdvno".

(5) Set the compensation magnification to "#4006 sc".

(6) Set the interval between two division points to "#4007 spcdv".

(7) Set "#4008 twopc" to "1". The function bidirectional pitch error compensation is enabled.

(8) For "#4009 refcmp", set the following compensation amounts after the measuring the actual machine position in "Setting pitch error compensation data".

[When the parameter "#2023 dir (-)" is set to "0"]

Compensation amount =

- (Actual machine position for the reference position when the direction of travel is negative) × 2

[When the parameter "#2023 dir (-)" is set to "1"]

Compensation amount =

- (Actual machine position for the reference position when the direction of travel is positive) × 2

In both cases, the unit of compensation amount depends on the setting of the machine error compensation unit (parameter "#1006 mcmpunit").

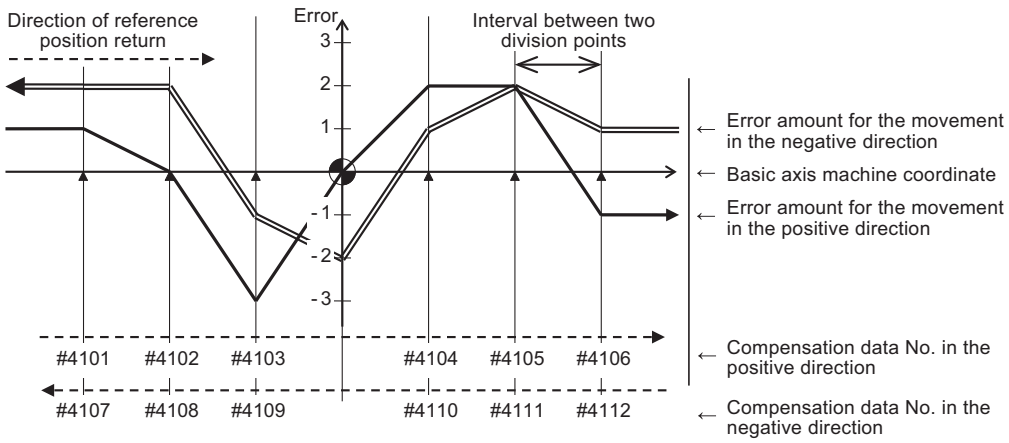

Bidirectional pitch error (linear axis)

[Parameter setting]

Parameter	#4001	#4002	#4003	#4004	#4005	#4006	#4007	#4008	#4009
	cmpax	drcax	rdvno	mdvno	pdvno	sc	spcdv	twopc	refcmp
Setting value	X	X	4103	4101	4112	1	10.000	1	4

Setting pitch error compensation data

(1) Move the axis to positive or negative direction, then measure and record actual machine position of each division point. Calculate compensation amount for each division point based on the actual machine position.

#4000 setting value	Calculation method of compensation amount (*1)
0 (Absolute amount method)	Compensation amount = (Commanded machine position - Actual machine position) × 2
1 (Incremental amount method)	Calculate compensation amount at the division point "n" when the position moved by "interval between two division points" which was set to #4007. The calculation formula of the compensation amount differs depending on whether the division point "n" is on positive side or negative side from the reference position. [On the positive side] Actual travel amount = (Actual machine position of division point "n") - (Actual machine position of division point "n-1") Compensation amount = (Interval between two division points - Actual travel amount) × 2 [On the negative side] Actual travel amount = (Actual machine position of division point "n") - (Actual machine position of division point "n+1") Compensation amount = (Interval between two division points + Actual travel amount) × 2

(*1) Compensation amount unit depends on the setting of the machine error compensation unit (parameter "#1006 mcmpunit").

(2) Set the calculated compensation amount to the parameter of compensation No. allocated to each division point.

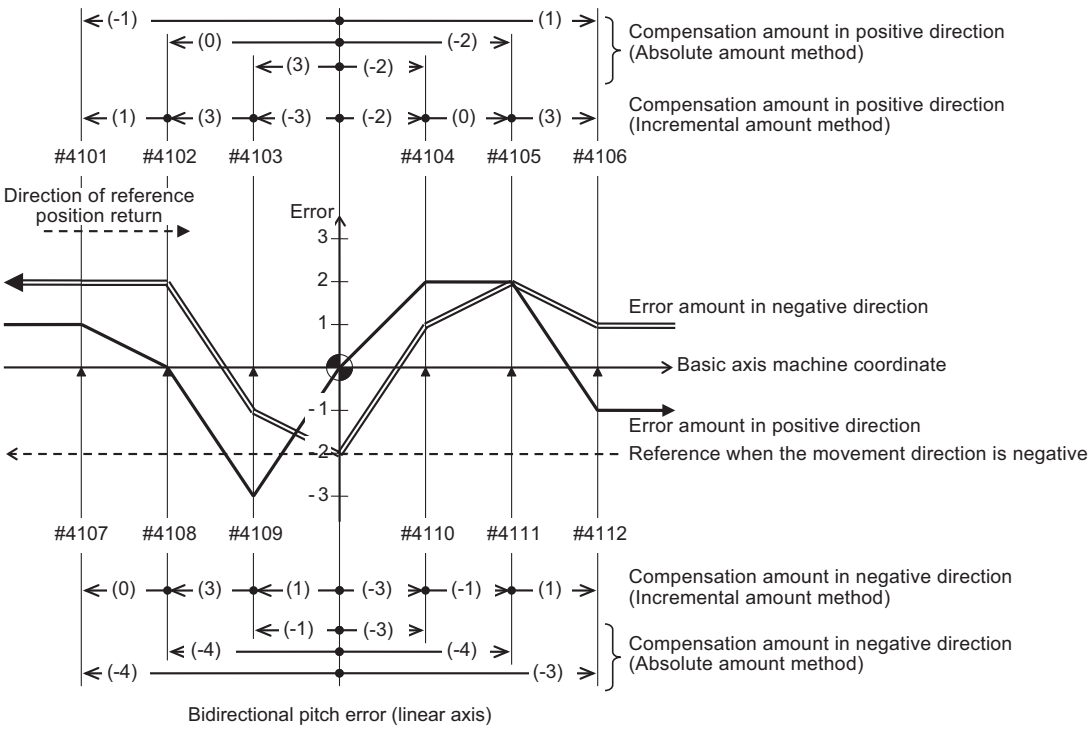

[Compensation amount settings]

Movement direction		Positive						Negative					
Compensation data No.		#4101	#4102	#4103	#4104	#4105	#4106	#4107	#4108	#4109	#4110	#4111	#4112
Compensation amount	Incremental amount method	-2	0	6	-4	-4	2	-8	-8	-2	-6	-8	-6
	Absolute amount method	2	6	-6	-4	0	6	0	6	2	-6	-2	2

15.2.2.2 When the basic axis is a rotary axis

This section describes how to set bidirectional pitch error data by taking a rotary axis having a pitch error such as illustrated below as an example.

Set the pitch error compensation data for an rotary axis in the same way as a linear axis.

However, note the following points.

- Set the interval between two division points so that the last division point will be 360 degrees.
- The sum of compensation amount being set in the incremental amount method will always be "0".
- The compensation amount of the last point in the absolute amount method (360 degrees) will always be "0".

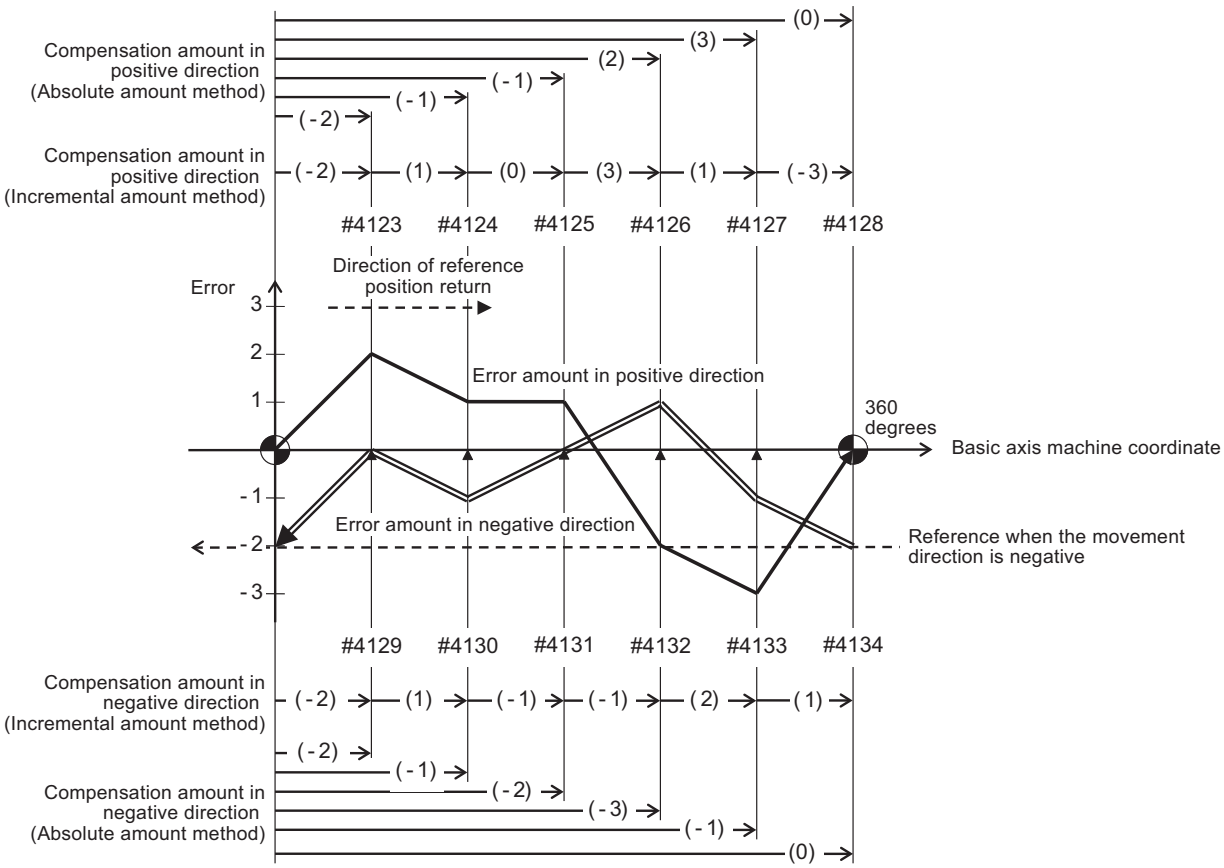

Bidirectional pitch error (rotary axis)

[Parameter settings]

Parameter	#4001	#4002	#4003	#4004	#4005	#4006	#4007	#4008	#4009
	cmpax	drcax	rdvno	mdvno	pdvno	sc	spcdv	twopc	refcmp
Setting value	C	C	4122	4123	4134	1	60.000	1	4

[Compensation amount settings]

Division point No.		#4123	#4124	#4125	#4126	#4127	#4128	#4129	#4130	#4131	#4132	#4133	#4134
Compensation amount	Incremental amount method	-4	-2	-2	4	6	0	-4	-2	-4	-6	-2	0
	Absolute amount method	-4	2	0	6	2	-6	-4	2	-2	-2	4	2
Movement direction		Positive						Negative					

16

Setting the Position Switches

16.1 Outline

Position switches (PSW) are used as alternatives for the dog switches provided on the machine axis. Virtual dog switches can be used by specifying axis names and conditions of virtual dog positions. This function outputs a signal to the PLC interface when the machine reaches the specified area. The virtual dog switches are called “position switches” (PSW).

NC axis position switch: Position switch Nos. of PSW1 to PSW24 and signal devices

	<axis>	<dog1>	<dog2>	<check>	$1	$2	$3	$4	$5	$6	$7
PSW1	#7501	#7502	#7503	#7504	X1D00	X1D20	X1D40	X1D60	X1D80	X1DA0	X1DC0
PSW2	#7511	#7512	#7513	#7514	X1D01	X1D21	X1D41	X1D61	X1D81	X1DA1	X1DC1
PSW3	#7521	#7522	#7523	#7524	X1D02	X1D22	X1D42	X1D62	X1D82	X1DA2	X1DC2
PSW4	#7531	#7532	#7533	#7534	X1D03	X1D23	X1D43	X1D63	X1D83	X1DA3	X1DC3
:	:	:	:	:	:	:	:	:	:	:	:
PSW24	#7731	#7732	#7733	#7734	X1D17	X1D37	X1D57	X1D77	X1D97	X1DB7	X1DD7

PLC axis position switch: Position switch Nos. of PSW1 to PSW24 and signal devices

	<axis>	<dog1>	<dog2>	<check>	Device
PSW1	#7501	#7502	#7503	#7504	R114/bit0
PSW2	#7511	#7512	#7513	#7514	R114/bit1
PSW3	#7521	#7522	#7523	#7524	R114/bit2
:	:	:	:	:	:
PSW15	#7641	#7642	#7643	#7644	R114/bitE
PSW16	#7651	#7652	#7653	#7654	R114/bitF
PSW17	#7661	#7662	#7663	#7664	R115/bit0
:	:	:	:	:	:
PSW32	#7811	#7812	#7813	#7814	R115/bitF

Position switches (NC axis: PSW1 to PSW24, PLC axis: PSW1 to PSW32) are used to set virtual dog coordinates (dog1 and dog2) on the coordinate axes, whose names are preset with <axis>, as alternatives for the dog switches provided on the machine axis.
When the machine reaches the specified area, a signal is output to the corresponding device of the PLC interface.
Whether the machine has moved into the area specified with the position switches can be judged at high speed by setting parameters.
To judge the entry of the machine to the area, set parameters to select which type of position to be used for each position switch from the following: commanded machine position or feed back position from encoder.
For description of the parameter, refer to "Alarm/Parameter Manual".

16.2 Setting and Operation Examples of dog1 and dog2

Settings of dog1 and dog2	Positions of dog1 and dog2	Description	
dog1 < dog2	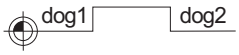	A signal is output when the machine reaches between dog1 and dog2.	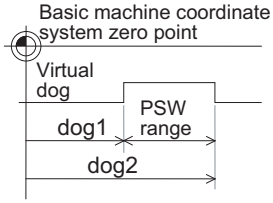
dog1 > dog2		A signal is output when the machine reaches between dog2 and dog1.	
dog1 = dog2	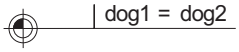	A signal is output when the machine is at dog1 (dog2).	

For rotary axes

Settings of dog1 and dog2	Positions of dog1 and dog2		Description
dog1 < dog2	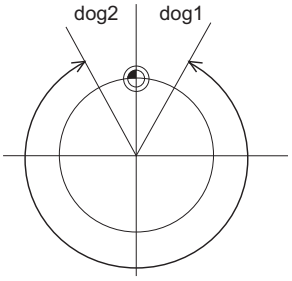	(Example) dog1 = 30.000 dog2 = 330.000	A signal is output when the machine reaches between dog1 and dog2.
	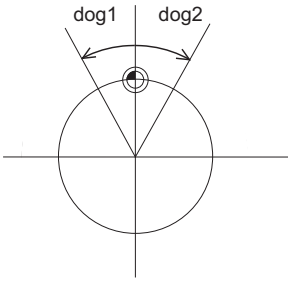	(Example) dog1 = -30.000 dog2 = 30.000	Signal is output in the same manner even if dog1 is in the negative area.
dog1 > dog2	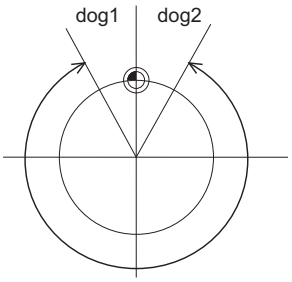	(Example) dog1 = 330.000 dog2 = 30.000	A signal is output when the machine reaches between dog2 and dog1.
dog1 ≦ 0 and 360 ≦ dog2	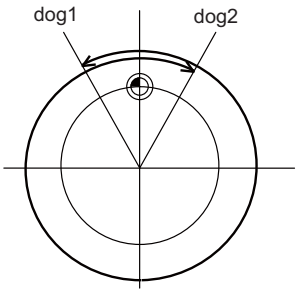	(Example) dog1 = -30.000 dog2 = 390.000	A signal is always output when the angle of dog1 and dog2 is within a range of 0 to 360 degrees.

16.3 Canceling the Position Switch

Enter a position switch number to be canceled (#75*1) in "# ( )" and a slash in "DATA ( )" on the setting field, then press the [INPUT] key. Axis name of the specified position switch will be deleted, and the position switch is disabled. However, the data in <dog1> and <dog2> are still retained in a memory. To enable the position switch again, only an axis name is required for setting.

17

Setting the Backlash Compensation

17.1 Backlash Compensation

Travel amount of a machine table may become less than the commanded amount due to the error (backlash) caused by reversal of the direction of the axis.
The backlash compensation is a function which automatically adds compensation amount to the travel amount when the direction of the axis is reversed.

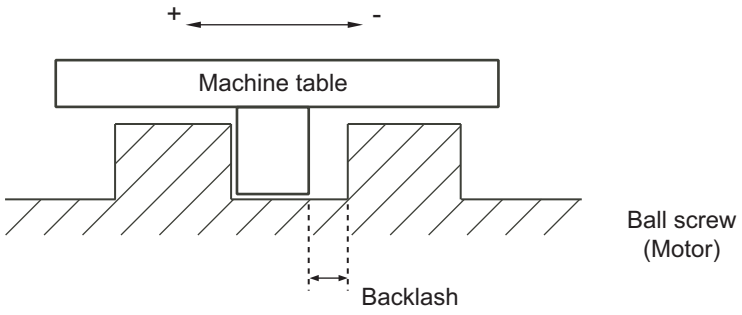

There are two types of backlash compensation as follows.

(1) G0 backlash (#2011 G0back)
Compensation amount that is used when an axis moved at the rapid traverse speed (G0).
Compensation amount is also measured at rapid traverse speed.

(2) G1 backlash (#2012 G1back)
Compensation amount that is used when an axis moved at cutting feedrate (G1, G2, G3).
Compensation amount to be set is measured using the most commonly used feedrate.

18

Setting the Deceleration Check

18.1 Function

The next block is executed after the axis is decelerated and stopped at the joint between the axis movement blocks. This is to reduce the machine shock and to prevent the corner roundness, at the time when the sudden change of the control axis feedrate occurs.

(1) Deceleration check during rapid traverse
The deceleration check is always carried out at the block end (before executing the next block) during rapid traverse.

(2) Deceleration check during cutting feed
The deceleration check is carried out at the block end (before executing the next block) during cutting feed when any one of the following conditions is valid.
(a) When the error detect switch is ON.
(b) When G09 (exact stop check) is commanded in the same block.
(c) When G61 (exact stop check mode) has been selected.

(3) Selection of deceleration check method
There are three methods for the deceleration check: command deceleration check method, smoothing check method and in-position check method.
The deceleration check method can be set independently for each execution block with the rapid traverse command (G00) or the cutting feed command (G01/G02/G03).

(a) Operation list
This table shows the operation list for each movement command set.

	Current block		
Succeeding block	**G00**	**G01**	**G00/G01 without moving**
G00	○	(○)(1)(2)	×
G01	○	(○)(1)(3)	×
Other than the above	○	(○)(1)	×

○ : Deceleration check is valid
(○) : (1)The deceleration check is valid when the error detect signal is ON, or G09 or G61 is valid.
(2) When the block commands G01 -> G00 are executed, #1502 G0lpfg is turned ON, and the opposite direction movement is reversed, the command deceleration check is performed.
(3) When the block commands G01 -> G01 are executed, #1503 G1lpfg is turned ON, and the opposite direction movement is reversed, the command deceleration check is performed.
In the case other than the above conditions, the deceleration check is not performed.
Refer to "Deceleration Check for Opposite Direction Movement Reversal" for the details of opposite direction movement reversal.
×: Deceleration check is invalid

(b) Selecting the deceleration check method

There are three methods for the deceleration check, and the method is selected by the parameter.

1) For the execution block with the rapid traverse command (G00/G53)

Parameter #1193 inpos	Deceleration check method	Determination condition
0	Command deceleration check	Deceleration check time passed
1	In-position check method	Deceleration check time passed, all axis smoothing zero and all axis in-position
2	Smoothing check method	Deceleration check time passed and all axis smoothing zero

2) For the execution block with the cutting feed command (G01/G02/G03)

Parameter			Deceleration check method	Determination condition
#1306 InpsTyp (G0/G1 common)	**#1389 G1SmthChk**	**#1223 aux07/BIT1**		
0 (cutting block)	**0**	**0**	Command deceleration check	Deceleration check time passed
		1	In-position check method	Deceleration check time passed, all axis smoothing zero and all axis in-position
	1	**-**	Smoothing check method	Deceleration check time passed and all axis smoothing zero

When the parameter "#1306 InpsTyp" is "1", the deceleration check method will be the same as the method of 1) rapid traverse regardless of the value of the parameter "#1389 G1SmthChk".

18.2 Deceleration Check Method

(1) Command deceleration check

After interpolation for one block has been completed, the completion of the command system deceleration is confirmed before execution of the next block. The required time for the deceleration check is equal to the longest one of the deceleration check time for the simultaneously commanded axes, which are determined according to the acceleration/deceleration mode and time constant.

(a) For linear acceleration/deceleration

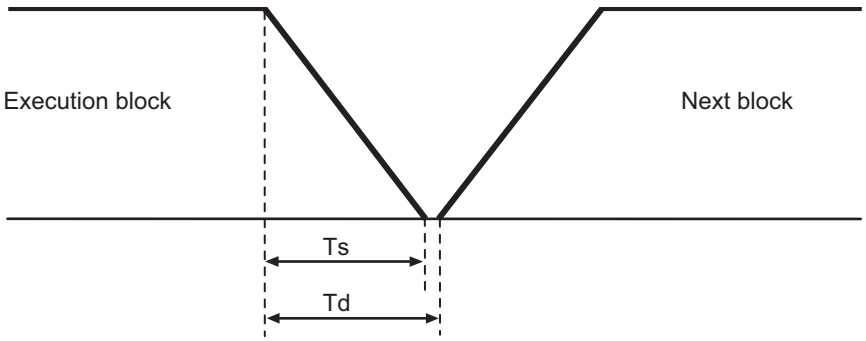

Ts : Liner acceleration/deceleration time constant

Td : Deceleration check time Td = Ts + α (0 to 10ms)

(b) For exponential acceleration/deceleration

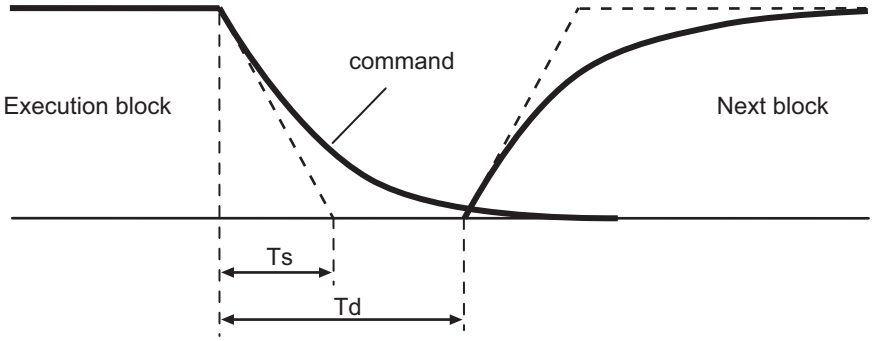

Ts : Exponential acceleration/deceleration time constant

Td : Deceleration check time Td = Ts×2 + α (0 to 10ms)

(c) For soft acceleration/deceleration

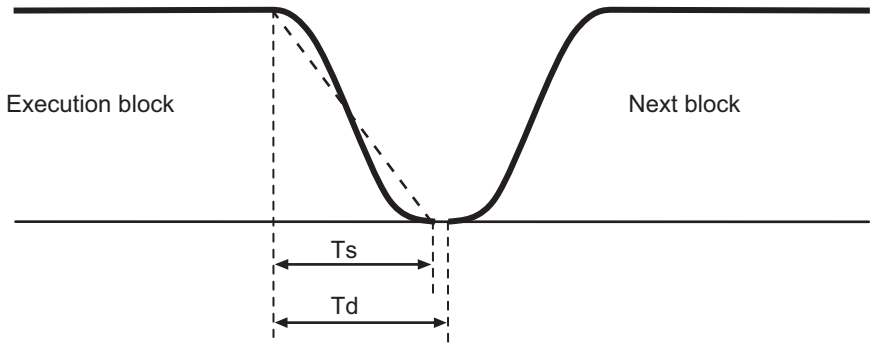

Ts : Soft acceleration/deceleration time constant

Td : Deceleration check time Td = Ts + α (0 to 10ms)

The deceleration check time required during rapid traverse is the longest rapid traverse deceleration check time of all axes. This check time is determined by the rapid traverse acceleration/deceleration mode and rapid traverse acceleration/deceleration time constant of simultaneously commanded axes.

The deceleration check time required during cutting feed is determined in the same manner. It is the longest cutting feed deceleration check time of all axes. This check time is determined by the cutting feed acceleration/deceleration mode and cutting feed acceleration/deceleration time constant of simultaneously commanded axes.

(2) Smoothing check method

After the command deceleration check has been completed, the completion of all axes smoothing zero in the part system is confirmed before execution of the next block.

(Example) For exponential acceleration/deceleration

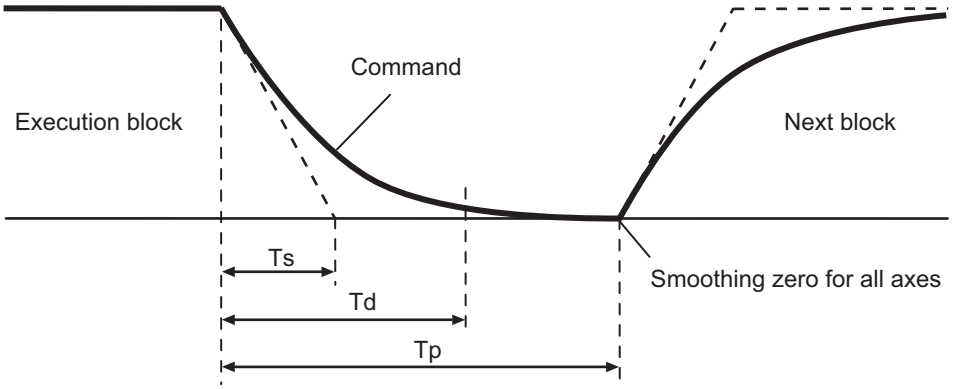

Ts : Exponential acceleration/deceleration time constant
Td : Deceleration check time
Tp : Waiting time for block completion

(3) In-position check

When the in-position check is valid, the command deceleration check is carried out. After that, it is confirmed that the servo system positional error is less than the parameter setting value, and the next block is executed.
The in-position check width can be designated with the servo parameter in-position width (SV024). Note that G0 and G1 can be designated independently with the axis specification parameter G0 in-position check width (G0inps) and G1 in-position check width (G1inps). If both the servo parameter and axis specification parameter are set, the larger value will have the priority.

(Example) For linear acceleration/deceleration

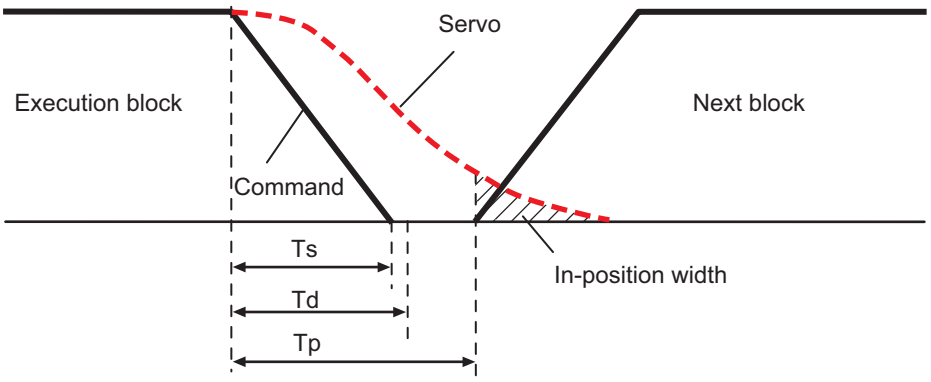

Ts : Liner acceleration/deceleration time constant
Td : Deceleration check time
Tp : Waiting time for block completion

If the SV024 setting value is larger, in-position check will end when the SV024 setting value is established.

18.3 Deceleration Check for Opposite Direction Movement Reversal

Deceleration check cannot be designated for G01 -> G00 or G01 -> G01, but it can be designated in the following manner only when the movement reverses to the opposite direction in successive blocks. Deceleration check can also be executed if even one axis is moving in the opposite direction while several axes are interpolating.

(1) Designating deceleration check for G01 -> G00 opposite direction movement reversal
If the axis movement reverses to the opposite direction in a G01 to G00 successive block, the deceleration check for the movement in the opposite direction can be changed with the base specification parameter G01 -> G00 deceleration check (#1502 G0lpfg).

	Same direction	Opposite direction
#1502 = 0	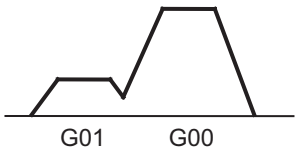	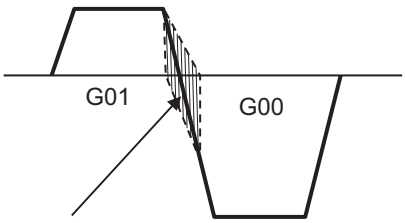 The acceleration rate is excessive due to the G01 and G00 composite speed. Enlarged figure 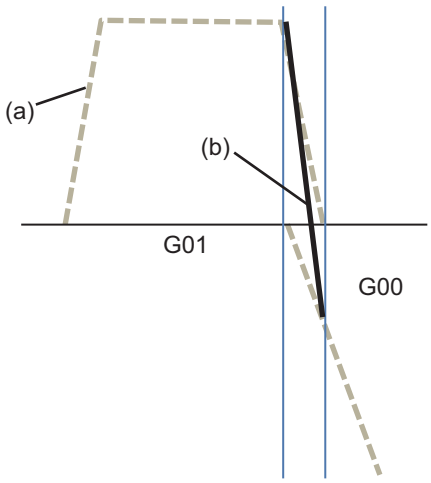 (a) Commanded speed (b) Resultant speed

	Same direction	Opposite direction
#1502 = 1	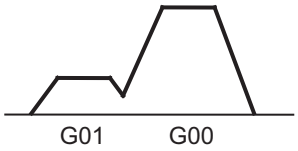	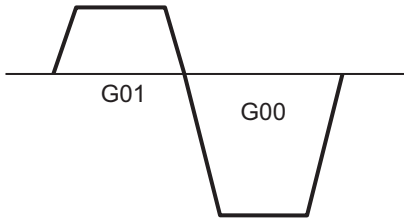 Command deceleration Enlarged figure 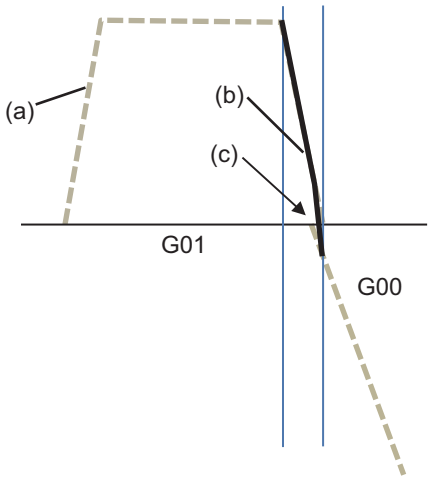 (a) Commanded speed (b) Resultant speed (c) Command deceleration is completed.

(2) Designating deceleration check for G01 -> G01 opposite direction movement reversal
If the axis movement reverses to the opposite direction in a G01 to G01 successive block, the deceleration check for the movement in the opposite direction can be changed with the base specification parameter G01 -> G01 deceleration check (#1503 G1Ipfg).

	Same direction	Opposite direction
#1503 = 0	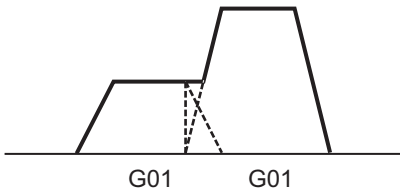	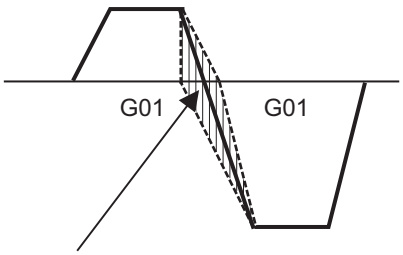 The acceleration rate is excessive due to the G01 and G01 composite speed.
#1503 = 1	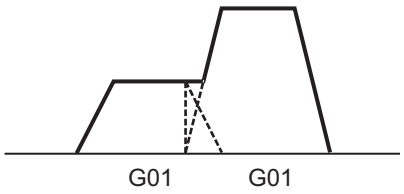	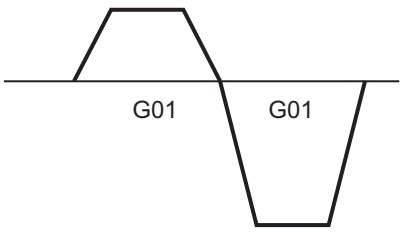 Command deceleration

18.4 Parameter

(1) Designating deceleration check
Base specification parameter

#	Item		Details	Setting range
1193	inpos	The definitions are changed with the setting of "#1306 InpsTyp Deceleration check specification type".		
		When Deceleration check method 1 is selected	Select the deceleration check method for G0. 0: Command deceleration check 1: In-position check 2: Smoothing check	0 to 2
		When Deceleration check method 2 is selected	Select the deceleration confirmation method for the positioning or cutting command. 0: G0, G1+G9 Command deceleration check 1: G0, G1+G9 In-position check 2: G0,G1+G9 Smoothing check	
1223	aux07/bit1	Deceleration check method 2	Select the deceleration check method in G1+G9. 0: Command deceleration check in G1+G9 1: In-position check in G1+G9 The deceleration check is not performed for the commands except G1+G9. When "#1306 InpsTyp deceleration check specification type" is set to "1" (Deceleration check specification type 2), this parameter will be invalid.	0 / 1
1306	InpsTyp	Deceleration check specification type	Select the parameter specification type for the G0 or G1 deceleration check. 0: Deceleration check specification type 1 G0 is specified with "#1193 inpos", and G1+G9 with "#1223 aux07/bit1". 1: Deceleration check specification type 2 G0 or G1+G9 is specified with "#1193 inpos".	0 / 1
1389	G1SmthChk	Smoothing check method in cutting block	Select whether to apply smoothing check method to a cutting block for deceleration check, when deceleration check method is selected individually for G0 and G1 (when #1306 InpsTyp=1). 0: Follow the setting of Aux07/BIT1 1: Apply smoothing check method	0 / 1

(2) Deceleration check during opposite direction travel
Base specification parameter

#	Item		Details	Setting range
1502	G0Ipfg	G1 -> G0 deceleration check	Select whether to perform a deceleration check when the travel direction is changed from G1 to G0. 0: Not perform 1: Perform	0 / 1
1503	G1Ipfg	G1 -> G1 deceleration check	Select whether to perform a deceleration check when the travel direction is changed from G1 to G1. 0: Not perform 1: Perform	0 / 1

(3) Designation of in-position check width

(a) Servo parameter

#	Item		Details	Setting range
2224	SV024 INP	In-position detection width	Set the in-position detection width. Set the accuracy required for the machine. The lower the setting is, the higher the positioning accuracy gets; however, the cycle time (setting time) becomes longer. The standard setting value is "50".	0 to 32767 (μm)
13024	SP024 INP	In-position width	Set the in-position detection width. Set the positioning accuracy required to the machine. Lower setting value increases the positioning accuracy, but prolongs the cycle time (settling time). The standard setting is "875".	0 to 32767 (1deg/1000)

(b) Axis specification parameter

#	Item		Details	Setting range
2077	G0inps	G0 in-position width	Set the in-position width for G0. Between SV024 and this parameter, the parameter with a larger value will be applied. When "0" is set, this parameter will be invalid: only SV024 will be available.	0.000 to 99.999 (mm)
2078	G1inps	G1 in-position width	Set the in-position width for G1. Between SV024 and this parameter, the parameter with a larger value will be applied. When "0" is set, this parameter will be invalid: only SV024 will be available.	0.000 to 99.999 (mm)

18.5 Relation with Other Functions

(1) Tool compensation
When the tool compensation is performed, the deceleration check will be operated on the block after compensation.

(2) Control axis synchronization (G125), control axis superimposition (G126), arbitrary axis exchange (G140), arbitrary axis superimposition (G156)
When control axis synchronization (G125), control axis superimposition (G126), arbitrary axis exchange (G140) or arbitrary axis superimposition (G156) is performed in the other part system, the succeeding block start timing may be delayed in the cutting block to which the axis related to these functions belongs.

(3) Automatic error detect
The deceleration check is invalid in the block with the automatic error detect ON, the block complete condition follows the automatic error detect.

(4) High-speed machining mode
When the axis movement reverses to the opposite direction in G01 to G01 successive block during the high-speed machining mode, the commanded deceleration will not be performed even if G1Ipfg has been set to "1". When the axis movement reverses to the opposite direction in G01 to G00 successive block, it follows the setting of G0Ipfg.

(5) High-speed simple program check
The deceleration check is performed during the high-speed operation in the high-speed simple program check also. The deceleration check time is reduced according to the time reduction coefficient during the high-speed simple program check operation.

(6) Deceleration check in polar coordinate interpolation / milling interpolation / cylindrical start / cancel command
- The deceleration check in polar coordinate interpolation / milling interpolation / cylindrical start / cancel command are as follows.

Parameter: #1223 aux07 BIT1	Deceleration check method
0	Command deceleration check
1	In-position check

18.6 Precautions

(1) When in-position check is valid, set the servo in-position width of the servo parameter.
(2) This function is invalid for the axes in the automatic machine lock.
(3) When the MSTB is commanded to the next block of the cutting commanded block, the MSTB code is output before the completion of the cutting command deceleration. Confirm the DEN (motion command completion) signal with PLC before the execution of the MSTB command which needs to be executed after the completion of the axis movement.
(4) When the control axis in the synchronous/superimposition control exists in the part system for which in-position check method has been set, the deceleration completion will be determined when the smoothing for all axes reaches zero. (Same as the smoothing check method)
(5) When the thread cutting commands are issued consecutively, the deceleration check will not be performed at the block joint.
(6) If the parameter "#1205 G0bdcc" is set to "1", the value set with the parameter "#2224 SV024" (in-position detection width) will be used as the in-position width.
The setting of the parameter "#2077 G0inps" (G0 in-position width) and the programmable in-position check with ",I" address are disabled.
(7) When the operation with machine lock is performed and variable-acceleration pre-interpolation acceleration/ deceleration is enabled by the function such as high-accuracy control, "Each axis in-position" signal is always ON.
(8) "Each axis in-position" signal can not be used during the synchronous operation.
(9) Deceleration check for opposite direction movement reversal
- When deceleration check is valid (#1502 G0Ipfg = 1), deceleration check will be executed when the axis reverses its movement to the opposite direction at the G1 -> G0 successive block regardless of whether G0 non-interpolation is ON or OFF.
- When deceleration check is valid (#1502 G0Ipfg = 1), deceleration check will be executed when the axis reverses its movement to the opposite direction at the G1 -> G0 successive block even in the fixed cycle.
- In the G1 -> G28, G1 -> G29 or G1 -> G30 successive blocks, deceleration check will always be executed when the G1 movement is completed, when movement to the intermediate point is completed and when movement to the return point is completed. Note that if the simple zero point return "#1222 aux06/bit7" is valid, G1 -> G0 deceleration check (#1502) will be followed when the G1 movement is completed and when movement to the intermediate point is completed. (Deceleration check will always be executed when movement to the return point is completed even in this case.)

(10) Deceleration check in movement including spindle/C-axis
- The deceleration check for spindle/C-axis movement command is as described in the table below. That is because a vibration and so on occurs in the machine when the position loop gain (#13002 PGN) is changed during the axis movement.

Parameter	Rapid traverse command
Inpos(#1193)	**G0 → XX (G0+G9 → XX)**
0	Command deceleration check
1	In-position check
2	Smoothing check

Parameter	Parameter	Other than rapid traverse command (G1: other than G0 command)	
G1SmthChk(#1389)	**AUX07/BIT-1 (#1223/BIT-1)**	**G1 → G0 (G1+G9 → XX)**	**G1 → G1**
0	0	In-position check (Applicable only to SV024)	No deceleration check
	1		
1	0	Smoothing check	
	1		

(Note 1) When G1 command is issued, the in-position check is performed regardless of the deceleration check parameter.
(Note 2) XX expresses all commands.

19

Synchronous Control

19.1 Synchronous Control

This chapter describes position alignment that is required at the setup of the machine.

19.1.1 Outline

The synchronous control is a control method that both master and slave axes are controlled with the same movement command by designated the movement command for the master axis also to the slave axis. This function is assumed to be used in the large machine tool, etc. which drives one axis with two servo motors.
The axis for the base of the synchronization is called the master axis, and the axis according to the master axis is called the slave axis.
(Note 1) The axis detachment function cannot be added to the axes used in the synchronous control.
(Note 2) The control axis synchronization between part systems and the synchronous control cannot be used simultaneously. (L system)

- The slave axis is controlled with the movement command for the master axis.
- One slave axis can be set to one master axis.
- Master axes and slave axes can be set up to three sets.

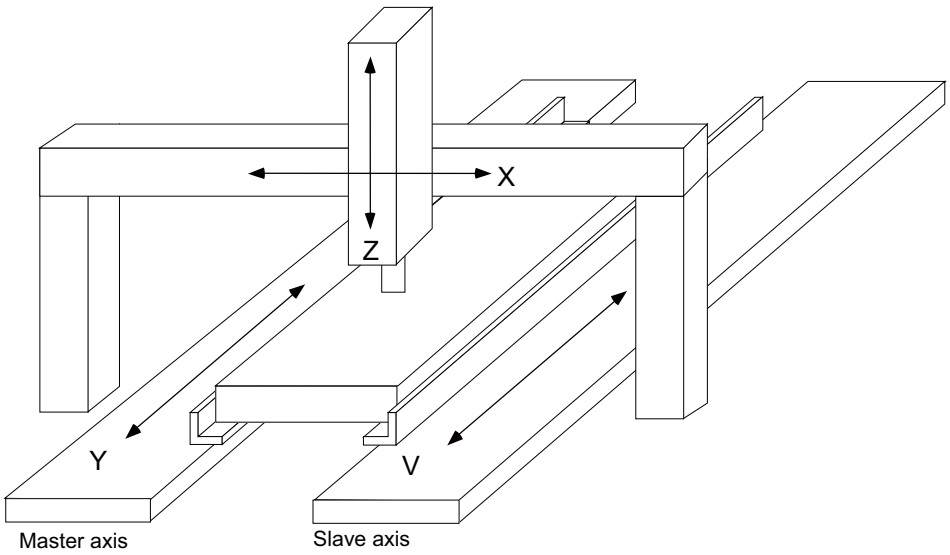

There are 3 types of synchronous control as follows:

(1) Position command synchronous control

This is used when the machine's rigidity is low.
This conforms the position command of the master axis to that of the slave axis using the synchronous control function of NC and drive those axes in parallel.
This can be used only by changing the NC setting, without changing the settings in the servo drive unit.

Position command synchronous control diagram

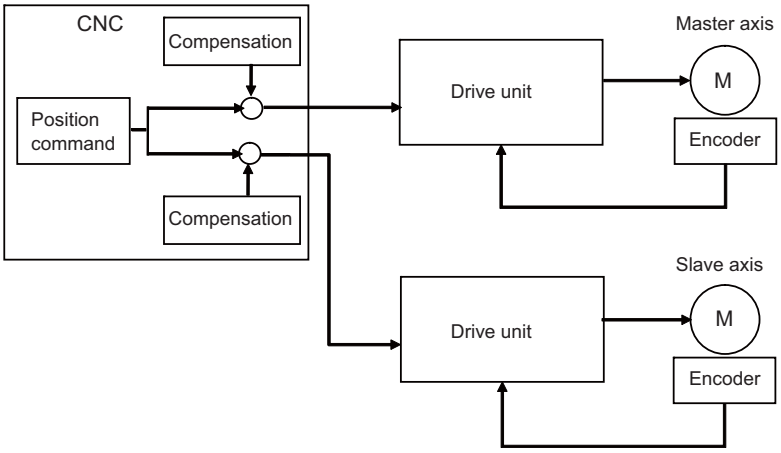

The position command synchronous control has the following configuration:

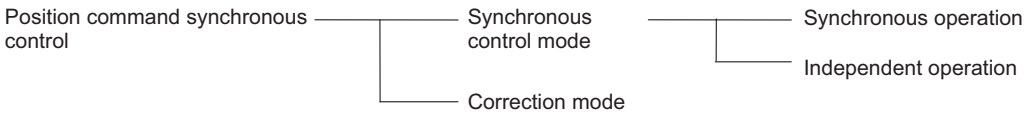

(2) Speed command synchronous control

This is used when reducing the scale of the full-closed system or when the machine's rigidity, etc. cause the mutual interference to the axes positions.
This drives the master axis and the slave axis in parallel using the common position feedback. Since the feedrate of each axis is controlled by the speed feedback of each axis, the stable control is available.
This can be used when the settings of the NC and the servo drive unit are changed.

Speed command synchronous control diagram

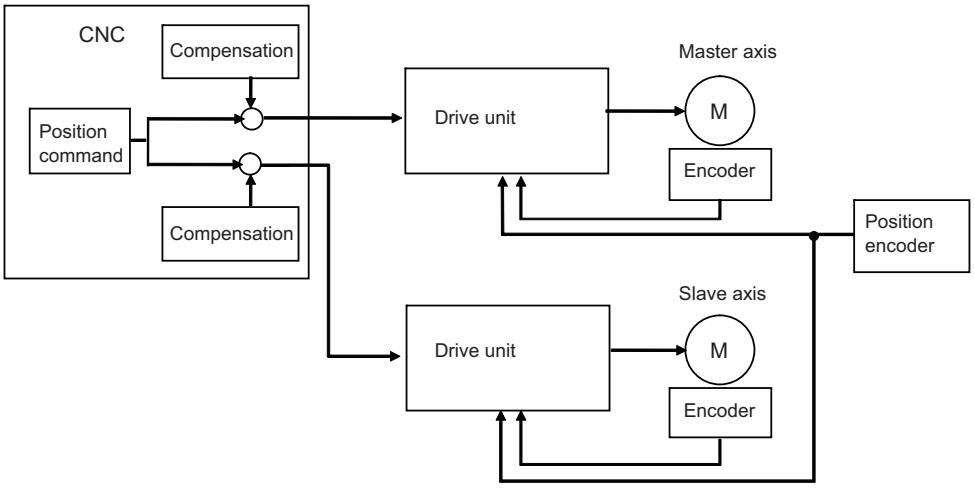

(3) Current command synchronous control

This drives the master and slave axes in parallel by reference to the speed feedback from the encoder onto the master axis side on the slave axis. Since that speed feedback is not the slave axis's itself, the slave axis easily vibrates.
Also, as the slave axis is easily influenced by the disturbance, this is not appropriate for the machine tools which need the positioning accuracy or the interpolation accuracy.
This can be used when the setting of the NC and the servo drive unit are changed.

Current command synchronous control diagram

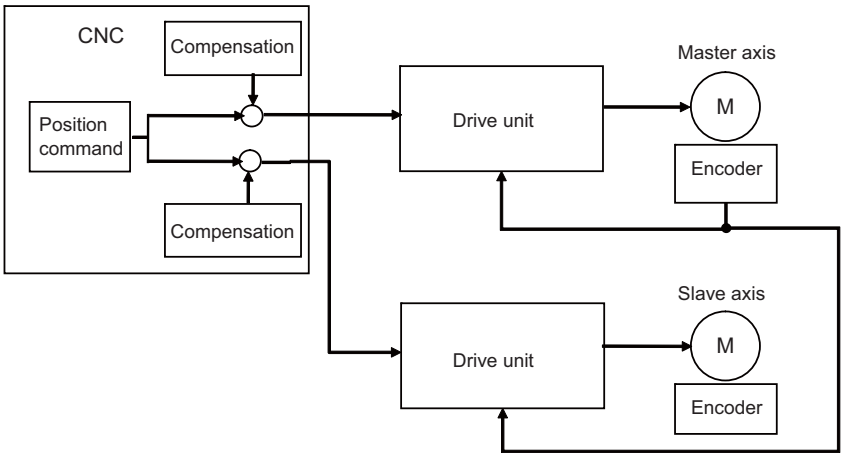

The "compensation" in the (1), (2) and (3) diagrams indicates the pitch error compensation, the thermal expansion compensation, the backlash compensation and the external machine coordinate compensation.
The axes which can set the compensation during the synchronous control differ according to the synchronous control type.

19.1.1.1 Synchronous control mode

The following two operation methods are available in the synchronous control mode.

(1) Synchronous operation

This is a method that both master and slave axes are moved simultaneously with the movement command for the master axis.

(2) Independent operation

This is a method that either the master or slave axis is moved with the movement command for the master axis.

19.1.1.2 Correction mode

The synchronization is temporary canceled to adjust the balance of the master and slave axes during the synchronous control mode in the machine adjustment. Each axis can be moved separately with the manual handle feed or the arbitrary feed in manual mode. If the operation mode other than the manual handle feed and arbitrary feed in manual mode is applied during the correction mode, the operation error will occur.

19.1.2 Reference Position Establishment in Synchronous Operation

Carry out the position alignment of the master and slave axes during machine's setup. The positions between the synchronous axes tend to deviate at power ON, thus this deviation needs to be adjusted. After position alignment, the position error between the synchronous axes is always checked while the synchronous operation method is selected. Perform the zero point establishment in the following steps for machines that perform synchronous operation at all times.

19.1.2.1 Zero Point Establishment in Relative Position Detection System/Dog-type Absolute Position Detection System

Position alignment at machine setup

In machine setup, carry out the position alignment between the two synchronous axes.
There are two types of position alignment methods as follows:

- Method using reference position adjustment value
- Method without using reference position adjustment value

(1) Position alignment using reference position adjustment value

This method is enabled when in a synchronous operation, and parameter "#1493 ref_syn" (synchronization at zero point establishment) is "1" (synchronous). This method is disabled when the parameter is set to "0" (Asynchronous).

There are following limitations in using the reference position adjustment value.

- The grid intervals (#2029 grspc) of the master and slave axes must be the same.
- Zero point return should start when the angle formed by the master and slave axes is smaller than [± Grid interval / 2].
  The zero point of the master axis is deviated from that of the slave axis by one grid, when zero point return is performed while the inclination is exceeding the allowance.

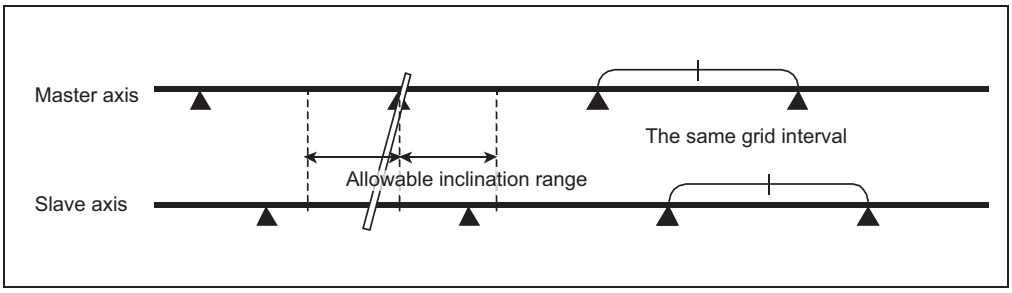

When the procedure on the next page is performed while the reference position adjustment value is other than "0", the remaining distance of the slave axis is compensated by the reference position adjustment value in step (e). Therefore, set the reference position adjustment value to "0" when starting position alignment after balancing.
For speed command synchronization and current command synchronization, carry out "(2) Position alignment without using reference position adjustment value".

(a) From the PLC, turn ON the bits of the "synchronous control operation method" signal, which are corresponding to the master and slave axes, in order to select synchronous operation in "synchronous control mode".
(b) Carry out zero point return manually.
(c) When the master axis reaches a dog, both axes decelerate at the same time.
(d) After deceleration, both axes start traveling at a creep speed.
(e) The master axis travels until reaching the second grid after dog OFF, and stops on the grid.
(If the deceleration after dog OFF goes over the 1st grid, the master axis stops on the 3rd grid)
The slave axis moves in synchronization with the master axis, when the reference position adjustment value is "0".
If the amount is other than "0", the slave axis moves asynchronously with the master axis after compensation by the reference position adjustment value.
(f) The master axis travels by the reference position shift distance (#2027 G28sft), and then stops.
The slave axis travels in synchronization with the master axis.
(g) Switch to "Correction mode", and feed the slave axis by handle feed to the position to be defined as its zero point.
(h) At this point, the "zero point adjustment completion" signal is input from the PLC.
(i) When the "zero point adjustment completion" signal is input, the NC automatically sets the reference position adjustment value in the parameter "#2036 slv_adjust" (reference position adjustment value).
Reference position adjustment value is a distance between the position obtained by subtracting the reference position shift distance from the current position and a near grid. Select a grid with which this vector becomes positive as the near grid.
"#" that stands for the zero point return completion is not displayed, and the alarm "Z81" is not cleared.
(j) Enter back into synchronous control mode synchronous operation.
(k) Carry out the normal manual zero point return. If necessary, adjust the position by the reference position shift distancet (#2027 G28sft).
Set the reference position shift distance to the master axis' parameter. If set to the slave axis' parameter, the setting is ignored.

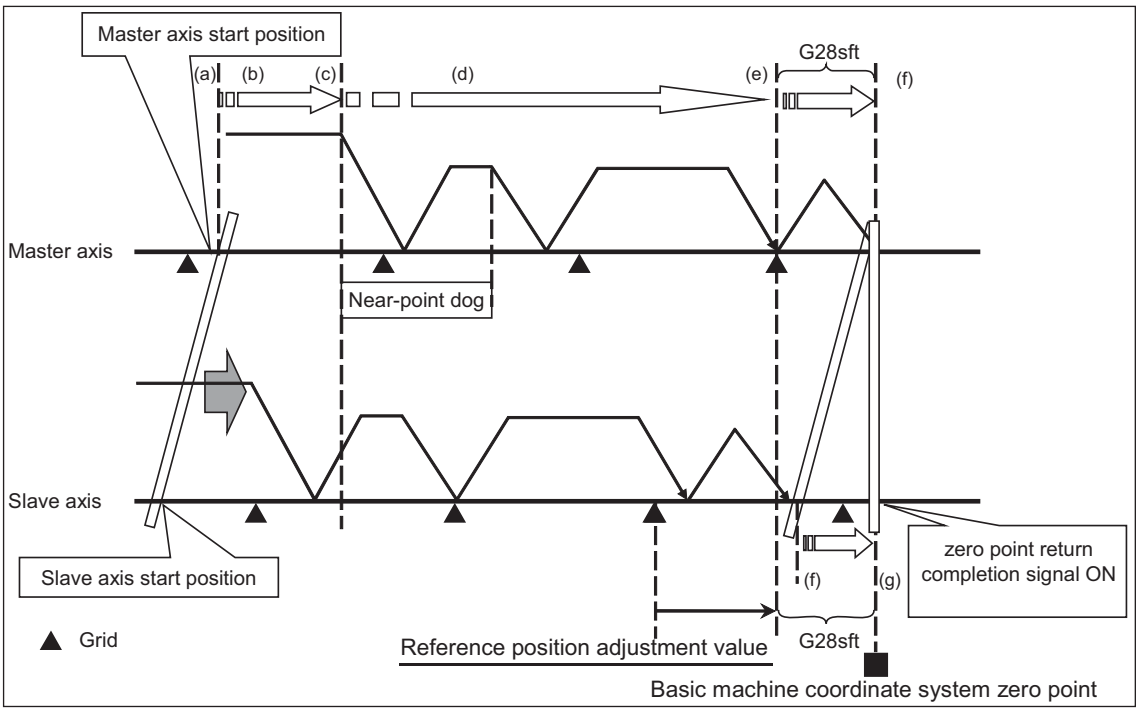

Adjustment sequence

(2) Position alignment without using reference position adjustment value

[When synchronization at zero point establishment (#1493 ref_syn) is "0" (asynchronous)]

(a) Select the correction mode, and feed the master and slave axes using the manual handle to correct the error between the two axes.
Use an instrument such as a level to detect horizontal level errors between the synchronous axes.

(b) Adjust the dog position.
Adjust the dog position so that the return position is always the same at reference position return.

(c) Change back to synchronous mode, and carry out manual dog-type reference position return.
Make sure to decelerate enough before carrying out reference position return.
When the master and slave axes individually decelerate and reach zero point after the master axis' dog ON, adjust each axis' reference position shift distance (#2027 G28sft) so that there is no error between the two axes.

[When synchronization at zero point establishment (#1493 ref_syn) is "1" (synchronous)]

(a) Set "#2036 slv_adjust" (reference position adjustment value) to "0".

(b) From the PLC, turn ON the master and slave axis bits of the "synchronous control operation method" signal to select "synchronous control mode" synchronous operation.

(c) Carry out zero point return manually.
The master axis travels until reaching the second grid after dog OFF, and stops on the grid.
(If the deceleration after dog OFF goes over the 1st grid, the master axis stops on the 3rd grid)
The slave axis travels in synchronization with the master axis.

(d) When necessary, adjust the zero point using the reference position shift distance (#2027 G28sft).
Set the reference position shift distance to the master axis' parameter. If set to the slave axis' parameter, the setting is ignored.

Position alignment after power ON

Normally, positions of the master and slave axes deviate at power ON, thus the position alignment for this deviation is required.
This position alignment is automatically done at the first dog-type reference position return after power ON. However, the settings of the zero point return parameters such as the reference position shift distance must be adjusted correctly.
Synchronous error check is not carried out until this position alignment is done.

Below is an example of reference position return.

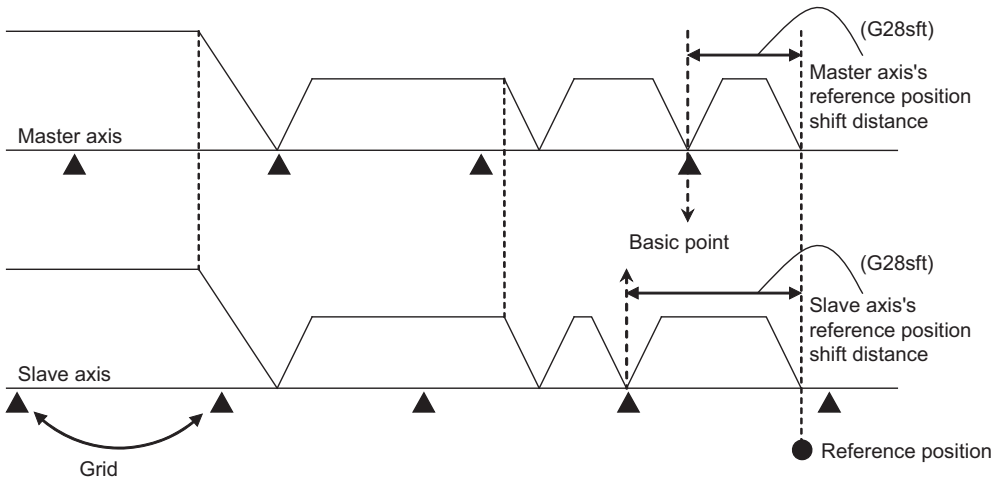

19.1.2.2 Zero Point Establishment in Dogless-type Absolute Position Detection System

Zero point establishment in dogless-type absolute position detection system can be performed by combining "#1493 ref_syn" and "#1496 push_typ" in one of the three ways below.

(1) When synchronization is set to "0"

Parameter	Setting value
synchronization at zero point establishment (#1493 ref_syn)	0

Master axis and slave axis determine their zero points individually.

(2) When synchronization is set to "1" and stopper method is set to "0"

Parameter	Setting value
synchronization at zero point establishment (#1493 ref_syn)	1
stopper method in zero point establishing operation (#1496 push_typ)	0

The zero points of both master and slave axes are determined by establishing the master axis' zero point.
During stopper method in zero point initial setting, push until either master or slave axis reaches the current limit.

(3) When synchronization is set to "1" and stopper method is set to "1"

Parameter	Setting value
synchronization at zero point establishment (#1493 ref_syn)	1
stopper method in zero point establishing operation (#1496 push_typ)	1

The zero points of both master and slave axes are determined by establishing the master axis' zero point.
During stopper method in zero point initial setting, push toward the machine end stopper until both master and slave axes reach the current limit and the droop is canceled when the current limit is reached.

During position command synchronous control, select (2) or (3) because zero points of both master and slave axes need to be established with synchronization at zero point establishment of the master axis.

Position alignment at machine setup

In machine setup, carry out the position alignment of the synchronous axes in the following procedure.

(1) Select the correction mode, and feed the master and slave axes using the manual handle to correct the error between the two axes.
Use an instrument such as a level to detect horizontal level errors between the synchronous axes.

(2) Change back to synchronous mode, and carry out the zero point initial setting.
There are two types of zero point initial setting: stopper method and marked point alignment method.
Moreover, there are two types of stopper methods: manual initialization and automatic initialization, and there are two types of marked point alignment methods: Marked point alignment method I and marked point alignment method II.
When automatic initialization is selected, some part of the following operations are automated.

[When synchronization is set to "0"]

Parameter	Setting value
synchronization at zero point establishment (#1493 ref_syn)	0

Master axis and slave axis determine their zero points individually.

(a) Set "1" to "#0 Absolute posn set" of master and slave axes individually.

(b) For the marked point alignment method, align both axes to the machine basic position (marked point) and set "1" to "#1 Origin-P".
For the stopper method, push toward the machine end stopper until both axes reach the current limit.

(c) For the stopper method with #2059 set to "0", when each axis is pushed against machine end stopper and reaches the current limit, the absolute position is established.
For the stopper method with #2059 set to "1", when each axis is pushed against machine end stopper and reaches the current limit, the axis moves to the opposite direction and the absolute position is established.
For the marked point alignment method I, when each axis is moved toward basic Z direction with "Ret. Ref. P." displayed in the "State" item and reaches its grid point, the absolute position is established.
For the marked point alignment method II, the absolute position is established without each axis moving to its grid point.

(d) Set "#2 Zero-P" to each axis.

- Synchronous error check is not performed during absolute position initial setting.
- When initial setting is carried out for one of the two synchronous axes, do this in asynchronous mode.
- During automatic initialization, the values set to push speed (#2055 pushf) for master and slave axes are valid respectively.
- "1" can be set to "#0 Absolute posn set" with PLC signal (AZSn).

The following is the operation example when synchronization at zero point establishment (#1493 ref_syn) is set to "0" in zero point establishing operation:

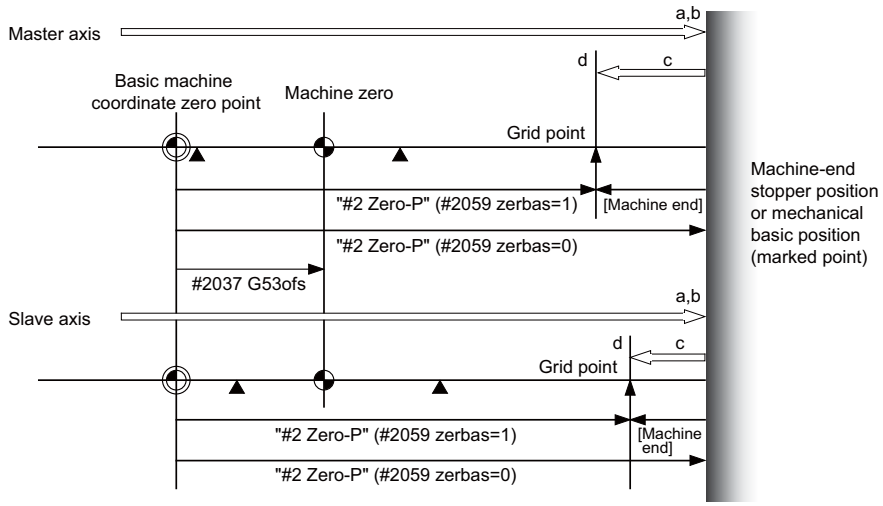

(Note) In carrying out zero point initial setting, even when one axis has stopped on a grid, the other axis keeps traveling. Thus, decelerate enough before setting.

[When synchronization is set to "1" and stopper method is set to "0"]

Parameter	Setting value
synchronization at zero point establishment (#1493 ref_syn)	1
stopper method in zero point establishing operation (#1496 push_typ)	0

The zero points of both master and slave axes are determined by establishing the master axis's zero point.
Slave axis moves synchronously with master axis.
At zero point establishment of stopper method, push until either master or slave axis reaches the current limit.
Due to this, when slave axis reaches the stopper first, the stopper position may not be the basic point.

(a) Set "1" in "#0 Absolute posn set" of master axis.
When "1" is set to "#0 Absolute posn set" of slave axis, "Setting error" occurs.

(b) For the marked point alignment method, align the master axis to the machine basic position (marked point) and set "1" to "#1 Origin-P".
For the stopper method (with "#2059 zerbas" set to "1"), push toward the machine end stopper until either master or slave axis reaches the current limit.

(c) For the stopper method with #2059 set to "0", when the master axis or the slave axis is pushed against machine end stopper and either axis reaches the current limit, the absolute position is established.
For the stopper method with #2059 set to "1", when the master axis or the slave axis is pushed against machine end stopper and either axis reaches the current limit, the axis moves in the opposite direction and the absolute position is established.
For the marked point alignment method I, when the master axis is moved toward basic Z direction with "Ret. Ref. P." displayed in the "State" item and reaches its grid points, the absolute position is established.
For the marked point alignment method II, the absolute position is established without each axis moving to its grid point.

(d) Set "#2 Zero-P" to master axis. When "#2 Zero-P" is set to master axis, the same value is set to "#2 Zero-P" of slave axis.
"#2 Zero-P" of slave axis cannot be set.

- Synchronous error check is not performed during absolute position initial setting. If an operation error (M01 0051) occurs at the start of the initial setting, correct the error with correction mode before the initial setting is performed.
- During automatic initialization, the values set to push speed (#2055 pushf) and approach distance (#2056 aproch) for master axis are also valid for the slave axis.
- Set the same value to select zero point parameter and basic point(#2059 zerbas) for master and slave axes.
- When different values are set to "#2 Zero-P" of master and slave axes, the automatic initial setting cannot be started.
- "1" can be set to "#0 Absolute posn set" with PLC signal (AZSn).
- When "1" is set to "#0 Absolute posn set" in the following status, "setting error" occurs.
  (*1) Synchronous control method is not selected.
  (*2) Setting to "#0 Absolute posn set" of slave axis was attempted.
  (*3) When the initial setting method is marked point alignment method I, "#2050 absdir" of the master and slave axes is different.

The following is the operation example when synchronization at zero point establishment (#1493 ref_syn) is set to "1" in zero point establishing operation:

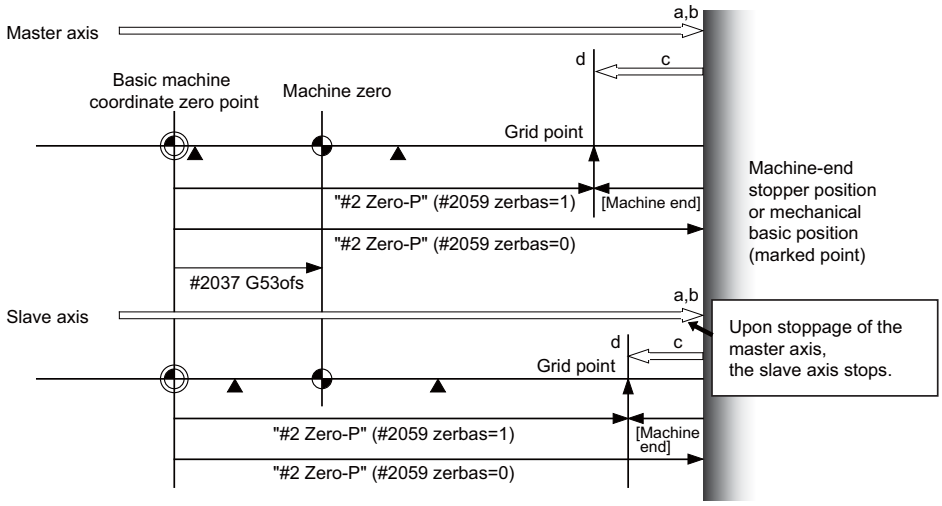

The following is the operation example of stopper method when the slave axis reaches the stopper first:

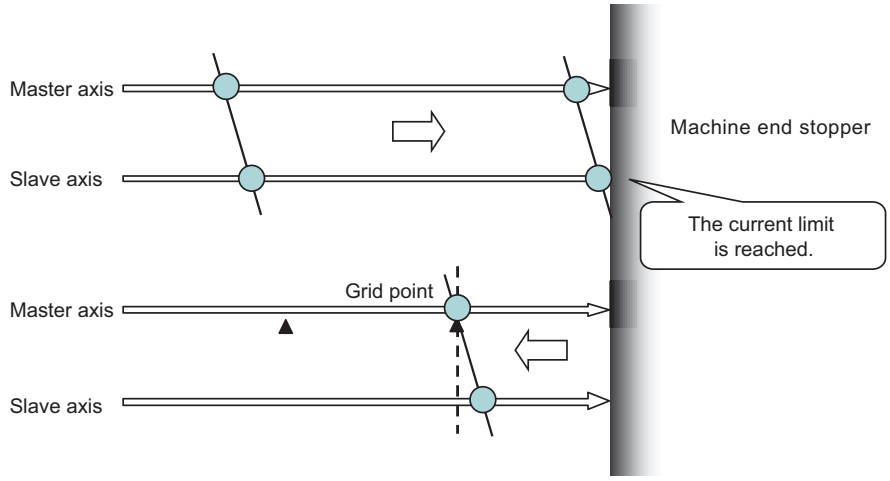

[When synchronization is set to "1" and stopper method is set to "1"]

Parameter	Setting value
synchronization at zero point establishment (#1493 ref_syn)	1
stopper method in zero point establishing operation (#1496 push_typ)	1

The zero points of both master and slave axes are determined by establishing the master axis's zero point.
Slave axis moves synchronously with master axis.
At zero point establishment of stopper method, push toward the machine end stopper until both master and slave axes reach the current limit.
Also, the droop is canceled when the current limit is reached, which enables correction of the deviation to establish the zero point. During automatic initialization, the above operation is performed by two pushing operations.

(a) Set "1" to "#0 Absolute posn set" of master axis.
When "1" to "#0 Absolute posn set" of slave axis is set, "setting error" occurs.

(b) For the marked point alignment method, align the master axis to the machine basic position (marked point) and set "1" to "#1 Origin-P". The droop is canceled at this time.
For the stopper method, push toward the machine end stopper until both axes reach the current limit.
When the current limit is reached, the droop is canceled.

(c) For the stopper method with #2059 set to "0", when the master axis and the slave axis are pushed against machine end stopper and both axes reach the current limit, the absolute position is established.
For the stopper method with #2059 set to "1", when the master axis and the slave axis are pushed against machine end stopper and both axes reach the current limit, the axes move in the opposite direction and the absolute position is established.
For the marked point alignment method I, when the master axis is moved toward basic Z direction with "Ret. Ref. P." displayed in the "State" item and reaches its grid point, the absolute position is established.
For the marked point alignment method II, the absolute position is established without each axis moving to its grid point.

(d) Set "#2 Zero-P" to master axis. When "#2 Zero-P" is set to master axis, the same value is set to "#2 Zero-P" of slave axis.
"#2 Zero-P" of slave axis cannot be set.

- Synchronous error check is not performed during absolute position initial setting.
- During automatic initialization, the values set to push speed (#2055 pushf) and approach distance (#2056 aproch) for master axis are also valid for the slave axis.
- Set the same value to select zero point parameter and basic point(#2059 zerbas) for master and slave axes.
- When different values are set to "#2 Zero-P" of master and slave axes, the automatic initial setting cannot be started.
- "1" can be set to "#0 Absolute posn set" with PLC signal (AZSn).
- When "1" is set to "#0 Absolute posn set" in the following status, "setting error" occurs.
  (*1) Synchronous control method is not selected.
  (*2) Setting to "#0 Absolute posn set" of slave axis was attempted.
  (*3) When the initial setting method is marked point alignment method I, "#2050 absdir" of the master and slave axes is different.

The following is the operation example of stopper method when the slave axis reaches the stopper first:
Canceling the droop when the current limit is reached enables correcting the deviation of the master and slave axes with the stopper as positive.

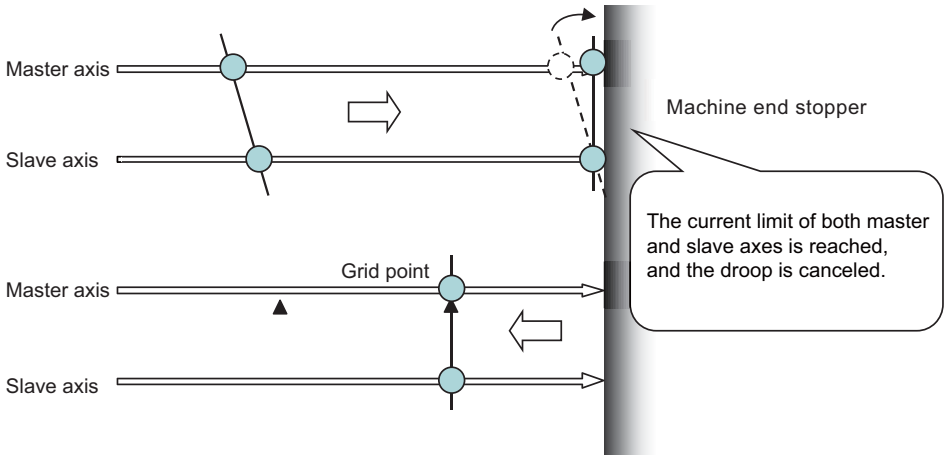

Position alignment after power OFF-ON

Normally, positions of the master and slave axes deviate at power ON, thus the position alignment for this deviation is required. Below are the position alignment methods.

(1) When synchronous error automatic correction at servo ON is enabled (#1281 ext17/bit3 = 1)
The position of the slave axis is automatically corrected to the position of the master axis at servo ON.

(2) When synchronous error automatic correction at servo ON is disabled
Position alignment is done automatically by carrying out manual zero point return. But the zero point related parameters need to be correctly adjusted and set.

When zero point has been established, synchronous error check is carried out even before this position alignment.

19.1.3 Parameter Setting for Synchronous Control

To carry out synchronous control, it is necessary to set the synchronous axes names and the allowable synchronization error value.
There is a restriction in the settings of the slave axis's axis parameters.

20

Data Backup and Restoration

The data backup and the data restoration of the PLC CPU and the CNC CPU will be performed by the backup/restoration function of the GOT2000 series.
The backup data will be saved in an SD card or a USB memory connected to the GOT2000 series.

The target data for the backup/restoration are as follows:
(○ : Targeted , ×: Not targeted)

Data outline	File name	Backup	Restoration
System file	SYSPRM.BIN	○	○
Parameters	ALL.PRM	○	○
Machining program	ALL.PRG	○	○
	ALL2.PRG (*2)	○	○
Machine tool builder macro program	MACROALL.BIN	○	○
MDI program	MDIALL.PRG	○	○
Tool offset data	TOOL.OFS	○	×
Tool all data files	TOOLALL.DAT	○	○
Workpiece offset data	WORK.OFS	○	○
Common variable	COMMON.VAR	○	○
Safety parameters(*1)	SAFEPARA.BIN	○	○
Safety ladders(*1)	SAFEPLC1.LAD	○	○
	SAFEPLC2.LAD		
APLC load module	APLC.BIN	○	○
System data	SRAM.BIN	○	×

(*1) When the parameter "#1481 Enable S-safety" (Enable smart safety observation) is set to "1", and when restoring the safety parameters and the safety ladders, release the safety password with the parameter "#51013 SF_PSWD". If the safety password is not released, these files will not be restored (the restoration will be skipped).
When the safety password of the CNC does not match that of the target file for the restoration even though the safety password is released, an error will occur during the restoration.

(*2) This file is valid when the specification of program memory capacity is 1000kB[2560m] or 2000kB[5120m].

(Note 1) Make sure to complete the editing of the machining program or the data setting operation before performing the backup/restoration.

(Note 2) When the parameter "#1391 User level protect" (Enable Data protection by user's level) is set to "1", release the protect before operating the backup/restoration.

20.1 Backup

This section explains the procedures to back up NC data in a memory card.

(1) Select "Data mng." on the GOT2000 utility main menu screen, and then select "Backup restoration".

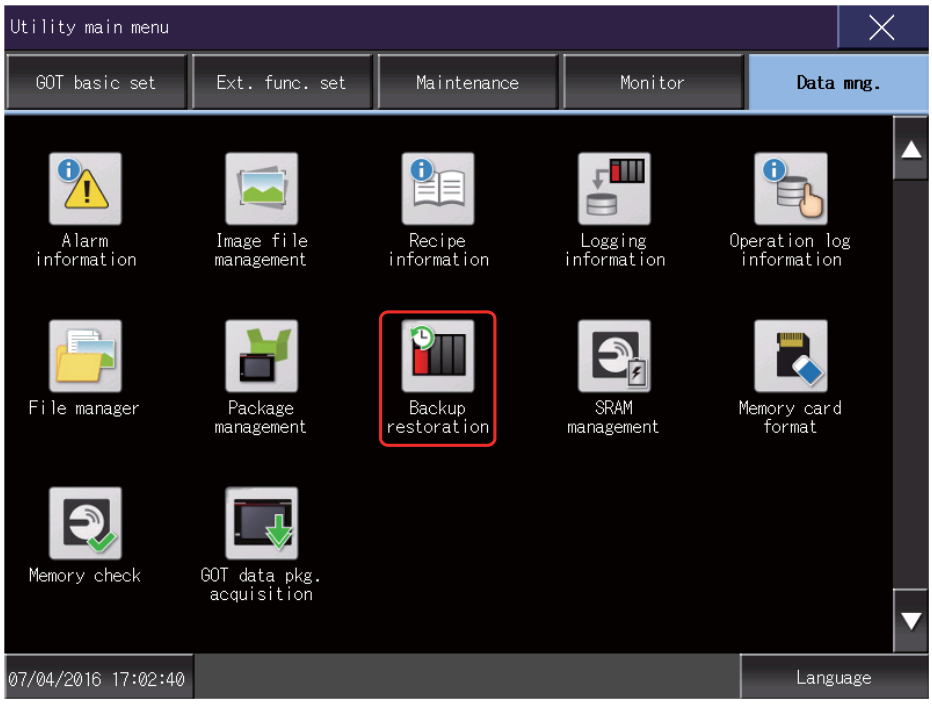

(2) When the menu screen of the backup/restoration is displayed, select "Backup function".

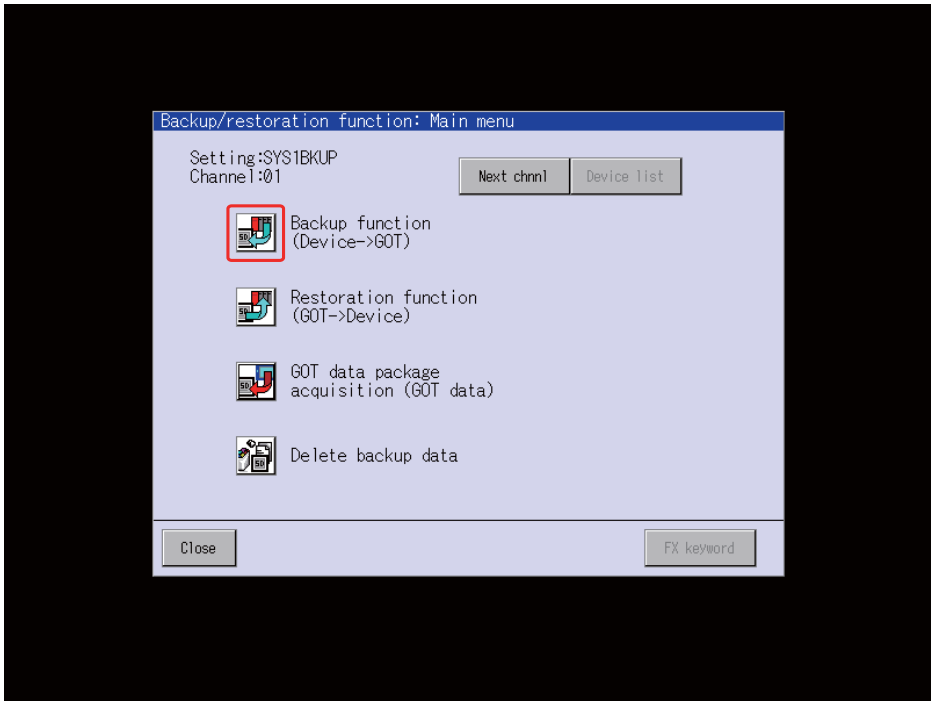

(3) The data will be saved in an SD card or a USB memory.

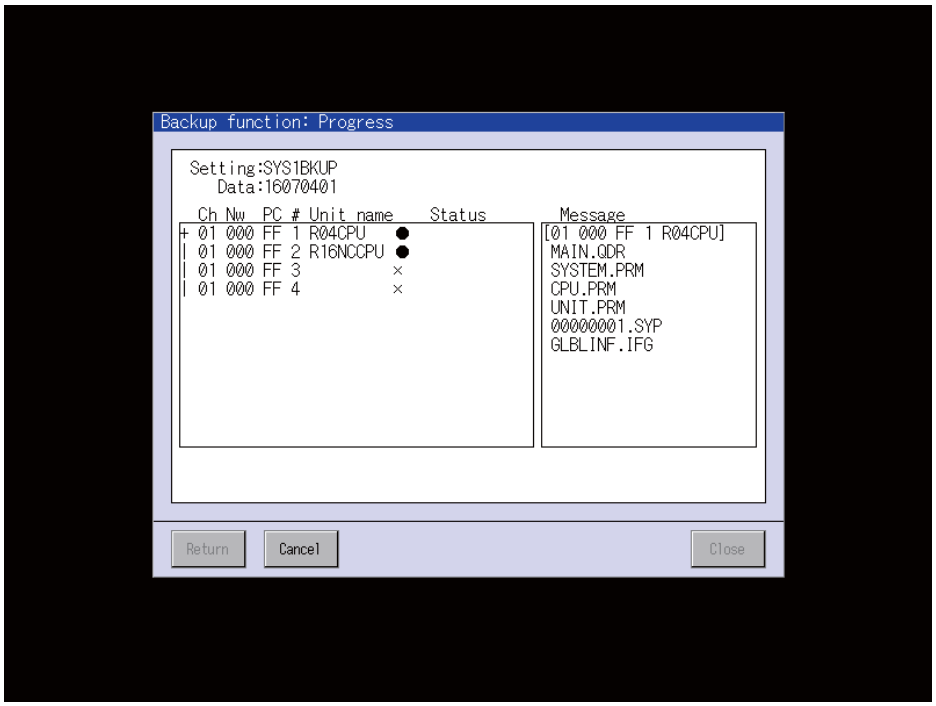

20.2 Restoration

This section explains the procedures to restore NC data in a memory card.

(1) Select "Data mng." on the GOT2000 utility main menu screen, and then select "Backup restoration".

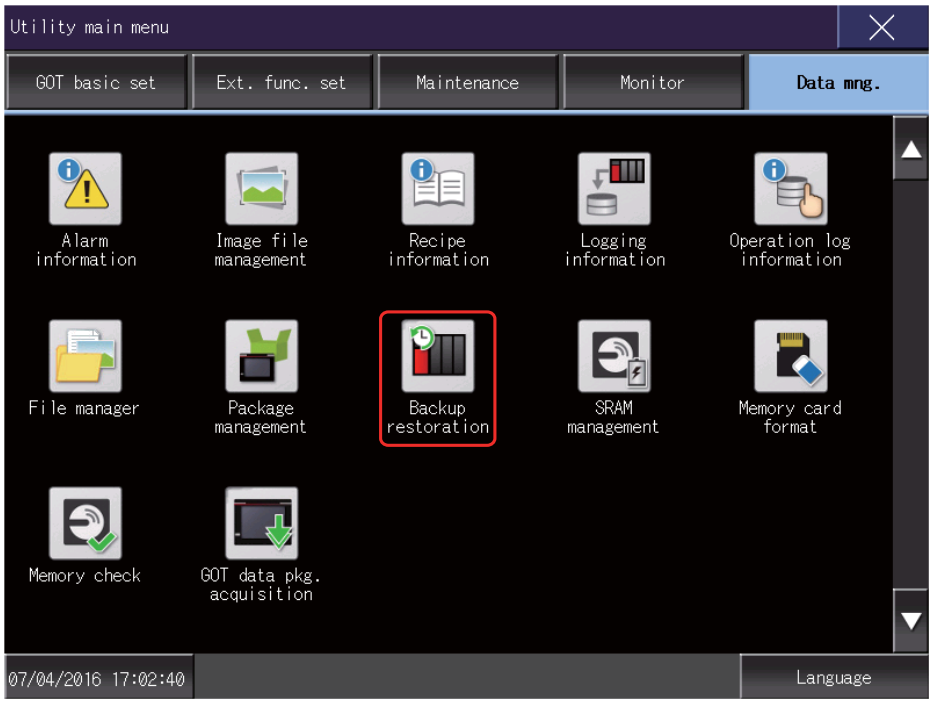

(2) When the menu screen of the backup/restoration is displayed, select "Restoration function".

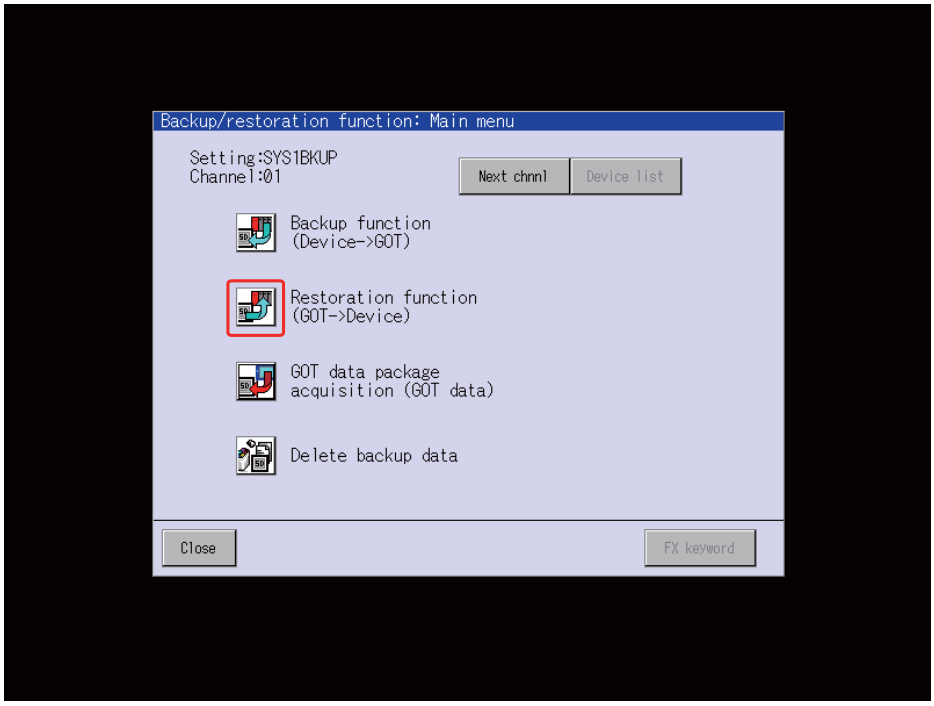

(3) The data stored in an SD card or a USB memory will be restored.

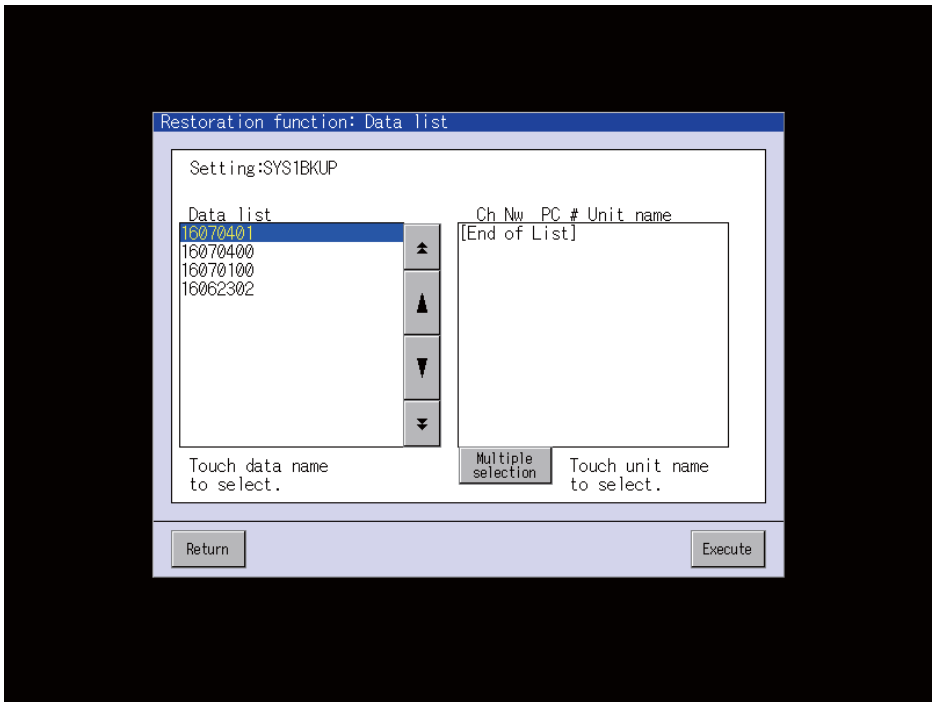

21

Appx.1: Protection Setting

According to the security level of the operator, a restriction with seven operation levels can be set. Restricting the operation level reduces a phenomenon in which defective workpieces run out due to an operation mistake. The operation level varies depending on the MTB specifications.

This function is an additional specification. Set "#1391 User level protect" to "1" to enable the function.

When the function is valid, each data is restricted from being edited, input/output, backed up or restored according to the setting of the protection level.
To edit, input/output, back up or restore data, enter the password to increase the operation level to be the same as or higher than the protection level of the data for change or output.

(Note) The control fails to back up or restore data if any of the protection levels of the files to be backed up or to be restored exceeds the current operation level.

21.1 Protect Setting Screen

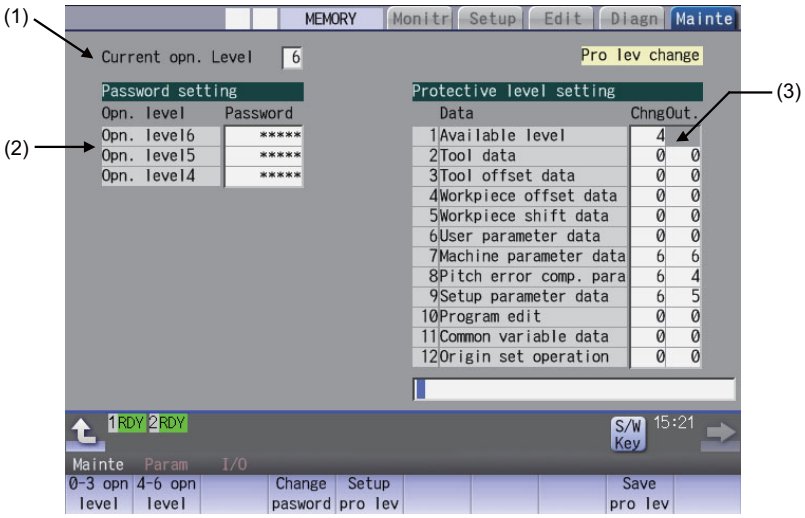

Display items

Display items		Details
(1)	Current opn. level	Displays the current operation level.
(2)	Passwords at operation levels 4 to 6	Displays the passwords at operation levels 4 to 6 with "****".
(3)	Protection level of each data item	Displays the protection level of each data item. The data set below the current operation level can be changed as needed. Changing the protection level displays the message "Pro lev change" at the upper right. Change: Specify the protection level to change data (including a case to input a file). Output: Specify the protection level to output a file.

Menus

Menus	Details
0-3 opn level	Changes the present authenticated password to the non-authenticated state and switches the operation level to 0 to 3. Which of the operation level between 0 and 3 being switched is followed by the PLC signal of the protection level.
4-6 opn level	Changes the operation levels.
Change pasword	Changes the password of the operation levels 4 to 6.
Setup pro lev	Changes the protection level of each data item.
Save pro lev	Saves the protection level setting of each data item.

Data to be protected

Display items	Initial value		Setting range		Change	Output (Note 1)	Objects to be protected
	Change	Output	Change	Output			
Available level	4	-	4-6	-	○	-	Table for protection level setting on this screen Table for protection level setting cannot be changed by the operation level which is lower than the set protection level.
Tool data	0	0	0-6	0-6	○	○	All tool data (TOOLALL.DAT) Tool life management data (TLIFE.TLF) Tool management data (TOOLMNG.DAT)
Tool offset data	0	0	0-6	0-6	○	○	Tool offset data (TOOL.OFS) *Tool compensation amount data/Tool measurement data
Workpiece offset data	0	0	0-6	0-6	○	○	Workpiece offset data (WORK.OFS) *Coordinate system offset data/Workpiece installation error compensation data/Workpiece measurement data
Workpiece shift data	0	0	0-6	0-6	○	○	All tool data (TOOLALL.DAT) *Workpiece shift data, etc.
User parameter data	0	0	0-6	0-6	○	○	Parameter data (ALL.PRM) *User parameter data, etc. Barrier data
Machine parameter data	0	0	0-6	0-6	○	○	Parameter data (ALL.PRM) *Machine parameter data, etc.
Pitch error compensation parameter	0	0	0-6	0-6	○	○	Parameter data (ALL.PRM) *Error compensation parameter data, etc. Error data
Setup parameter data	0	0	0-6	0-6	○	○	Memory format All erasure of machining programs All erasure of machine tool builder macros All erasure of tool life data All erasure of tool data fixpro formatting SRAM data (SRAM.BIN)
Program editing	0	0	0-6	0-6	○	○	Program editing Buffer correction Machining program files (/PRG/USER, /BMEM) Fixed cycle program (/PRG/FIX)
Common variable data	0	0	0-6	0-6	○	○	Common variable data (COMMON.VAR)
Origin set operation	0	0	0-6	0-6	○	-	G92 set

(Note 1) The protection is for outputting files.

(Note 2) Following operations are available to operate at the protection level 6 and over.
- Modal output, one-shot output and modal clear
- PLC-STOP
- S analog adjustment
- Absolute position setting
- Servo diagnosis
- Collection setting

21.2 Returning the Password to the Non-input State (Operation level 0 to 3)

Operation Methods

(1)	Press the menu [0-3 opn level].	➡	The menu [0-3 opn level] is highlighted. The operation message "Change opn. level back to 0 to 3? (Y/N)" is displayed. When the protection level setting is not saved, the operation message "Save the protective level setting? (Y/N)" is displayed, and the above message appears after Y/N is entered.
(2)	Press the [Y] or [INPUT] key.	➡	The operation message "Operation level has returned to 0 to 3." is displayed, and the highlighted menu [0-3 opn level] returns to normal. The operation level returns to one of operation levels 0 to 3 in accordance with the current signal status. All menus are displayed in gray.

21.3 Changing the Operation Level to One of 4 to 6

Operation Methods

(Example) Change the operation level to "6"

(1)	Press the menu [4-6 opn level].	➡	The menu [4-6 opn level] is highlighted. The cursor appears on the current operation level. The operation message "Select the opn. level to be changed to." is displayed.
(2)	Enter the operation level to be changed to with a number. (Example) 6 [INPUT]	➡	The operation message "Type in your password." is displayed.
(3)	Enter the password of the level to be changed.	➡	<When the password is correct> The operation message "Operation level has changed." is displayed, and the operation level after the change is displayed in the current operation level field. <When the password is incorrect> The operation message "Your password is incorrect." is displayed, and the operation level returns to the previous one. In both cases, the highlighted menu returns to normal, and the cursor disappears, too.

21.4 Changing the Password

Operation Methods

(Example) Change the password of operation level 4 from "OLDPASS" to "NEWPASS"

(1)	Press the menu [Change pasword].	➡	The menu [Change pasword] is highlighted. The operation message "Enter the current password." is displayed. The cursor appears on the current operation level.
(2)	Use [↑] or [↓] key to move the cursor to the operation level where you want to change the password. (Operation level 4 in this case)	➡	The operation message "Enter the current password." is displayed.
(3)	Enter the current password for the operation level of the cursor position. (Example) OLDPASS [INPUT]	➡	<When the password is correct> The operation message "Enter a new password." is displayed. <When the password is incorrect> The operation message "Your password is incorrect." is displayed, and then the operation returns to the process (2).
(4)	Enter a new password. (Example) NEWPASS [INPUT]	➡	<When the acceptable password is entered> The operation message "Type in the new password again." is displayed. <When the unacceptable password is entered> The operation message "Set a password that meets the condition." is displayed, and then the operation returns to the process (4).
(5)	Enter the new password again. (Example) NEWPASS [INPUT]	➡	<When the re-entered password is equal to the first one> The operation message "Password has changed" is displayed, and the highlighted menu [Change pasword] returns to normal. <When the re-entered password is not equal to the first one> The operation message "Your password is incorrect." is displayed, and then the operation returns to the process (4).

(Note 1) Set a password with one-byte alphanumeric characters between 3 and 8 letters (only capital letters are acceptable for alphabet). In addition, "UPARA" is unavailable to set as the password.

(Note 2) Changing the password is available only for the lower operation level than the current one.

21.5 Clearing the Password

Operation Methods

(Example) Clear the password of operation level 4

(1)	Press the menu [Change pasword].	➡	The menu [Change pasword] is highlighted. The operation message "Enter the current password." is displayed. The cursor appears on the current operation level.
(2)	Use [↑] or [↓] key to move the cursor to the operation level where you want to change the password. (Operation level 4 in this case)	➡	The operation message "Enter the current password." is displayed.
(3)	Enter the current password for the operation level of the cursor position. (Example) OLDPASS [INPUT]	➡	<When the password is correct> The operation message "Enter a new password." is displayed. <When the password is incorrect> The operation message "Your password is incorrect." is displayed, and then the operation returns to the process (2).
(4)	Enter "0". (Example) 0 [INPUT]	➡	The operation message "Clear the password? (Y/N)" is displayed.
(5)	Press the [Y] or [INPUT] key.	➡	<When pressing [Y] or [INPUT] key> The operation message "Password has been cleared" is displayed, and then the password returns to the initial one. The highlighted menu [Change pasword] returns to normal. <When pressing other than [Y] or [INPUT] key> The operation message disappears and the password stays the same. The highlighted menu [Change pasword] returns to normal.

(Note 1) Clearing the password is available only for the lower operation level than the current one.

21.6 Changing the Protection Level

Changing the protection level is available only for the data being set in the lower level than a current operation level.

Operation Methods

(Example) Change the "Available level" from "4" to "5"

(1)	Press the menu [Setup pro lev].	➡	The menu [Setup pro lev] is highlighted. The cursor appears on the "Chng" of "Available level".
(2)	Move the cursor to the protection level to be changed, then enter the new protection level. (Example) 5 [INPUT]	➡	"5" is set in the "Chng" field of "Available level". The cursor moves to the right when "Chng" is set. (The cursor moves downward when "Available level" is changed.) The cursor moves to the left below when [Out.] is set. "Pro lev change" is displayed on the upper right of the screen.
(3)	Press the menu [Setup pro lev].	➡	The highlighted menu [Setup pro lev] turns to normal. The cursor disappears.

(Note 1) When the value of "Available level" in the setup protection level is higher than the current operation level, the protection level is unable to change. (The menu [Setup pro lev] is grayed out.)

(Note 2) The higher protection level than the current operation level is unable to set.

(When the current operation level is "5", the protection level is unable to be set to "6".)

(Note 3) When changing the protection level during input-output, an error may occur in the middle of the input-output.

21.7 Saving the Protection Level Setting

Operation Methods

(1)	Press the menu [Save pro lev].	➡	The operation message "Save the protective level setting? (Y/N)" is displayed.
(2)	Press the [Y] or [INPUT] key.	➡	The operation message "Protective level setting has been saved." is displayed. The displayed message "Pro lev change" on the upper right of the screen is disappeared.

(Note 1) After changing the protection level, if the screen is switched without saving the change, the operation message "Save the protective level setting? (Y/N)" is displayed. If you switch the screen without saving the change, the changed setting is canceled.

(Note 2) After changing the protection level, if you turn the power OFF without saving the change, the changed protection level is canceled.

22

Appx.2: EMC Installation Guidelines

For details of the drive section (servo/spindle drive unit), refer to "EMC Installation Guidelines" of instruction manuals for each drive unit.

22.1 Introduction

EMC Directives became mandatory as of January 1, 1996. The subject products must have a CE mark attached indicating that the product complies with the Directives.
As the NC unit is a component designed to control machine tools, we believe that it is not a direct EMC Directives subject. However, we would like to introduce the following measure plans to back up EMC Directives compliance of the machine tool as the NC unit is a major component of the machine tools.

(1) Methods of installation in control/operation panel
(2) Methods of wiring cables to outside of panel
(3) Introduction of members for measures

Mitsubishi is carrying out tests to confirm the compliance to the EMC Directives under the environment described in this manual. However, the level of the noise varies depending on the equipment type and layout, control panel structure and wiring lead-in, etc.
Thus, we ask that the machine tool builder for confirming the final noise level.

22.2 EMC Directives

The items that the EMC Directives regulate can be roughly divided into the following two types.
- Emission: Capacity to prevent output of obstructive noise that adversely affects external devices
- Immunity: Capacity to not malfunction due to obstructive noise from external source

Contents of the regulation are summarized in the table below.
We assume that the standards and test contents required for a machine tool are almost the same as the following.

Class	Name	Details	EN Standards	
Emission				
	Radiated noise	Restriction of electromagnetic noise radiated through the air	EN61000-6-4 (General industrial machine) EN61800-3 (Motor control unit)	EN55011 (CLASS: A)
	Conductive noise	Restriction of electromagnetic noise discharged from power supply line		
Immunity				
	Static electricity electrical discharge	(Example) Regulation of withstand level of static electricity electrical discharge accumulated in human body	EN61000-6-2 (General industrial machine) EN61800-3 (Motor control unit)	EN61000-4-2
	Radiation immunity	(Example) Simulation of immunity from digital wireless telephones		EN61000-4-3
	Burst immunity	(Example) Regulation of withstand level of noise from relay or plug and play		EN61000-4-4
	Conductive immunity	(Example) Regulation of withstand level of noise flowed from power supply wires, etc.		EN61000-4-6
	Power supply frequency magnetic field	(Example) Regulation of electromagnetic noise of 50/60Hz power supply frequency		EN61000-4-8
	Power supply dip (fluctuation)	(Example) Regulation of power voltage drop withstand level		EN61000-4-11
	Surge	(Example) Regulation of withstand level of noise caused by lightning		EN61000-4-5

22.3 EMC Measures

The following items mainly need to be taken into account as a countermeasure for EMC.

(1) Store the device in a sealed metal panel.
(2) Ground all conductors that are floating electrically. Decrease the impedance.
(3) Increase the distance between the drive line and signal wire.
(4) Shield the cables wired outside of the panel.
(5) Install a noise filter.

Pay attention to the following items to suppress the noise radiated outside of the panel.

(1) Accurately ground the devices.
(2) Use shielded cables.
(3) Increase the electrical seal of the panel. Reduce the gaps and holes.

22.4 Panel Structure

The design of the panel is a very important factor for the EMC measures. Take the following measures sufficiently into consideration when creating a panel.

22.4.1 Measures for Control Panel Body

(1) Use metal for all members configuring the panel.
(2) When joining the metal plate, treat the welded or contacting sections so that the impedance is reduced, and then fix with screws.

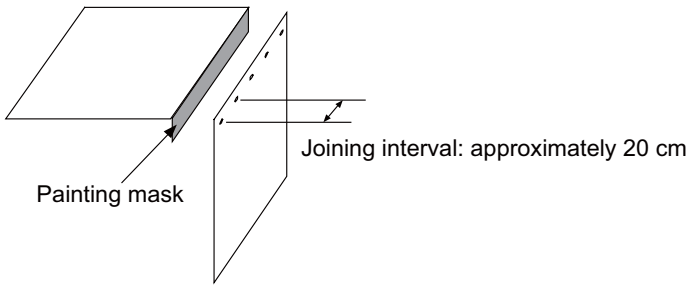

(3) Be careful not to bend the plate by such as screwing work. If there is a gap, noise leaks out from that part.
(4) Plate (nickel tin) the metal plate surface at the grounding plate, and connect the connection parts with the low impedance.
(5) If there is a large opening, such as ventilation holes, make sure to close the hole.

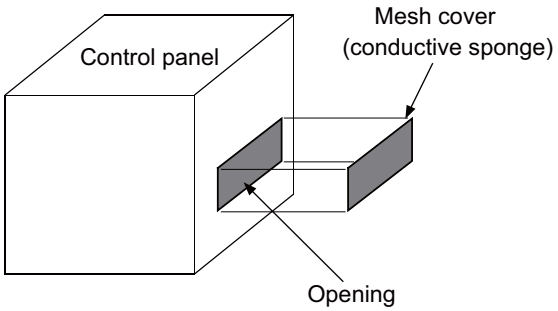

(Note 1) Using screws to fix the plates that have been painted is the same as an insulated state. Remove the paint and fix the screws.

22.4.2 Measures for Door

(1) Use metal for all members configuring the panel.
(2) When joining the door, use a gasket to lower the impedance of the contacting sections, or use a structure with a large contact area as shown below.
(3) The EMI gasket or conductive packing must contact the metal surface uniformly and at the correct position.

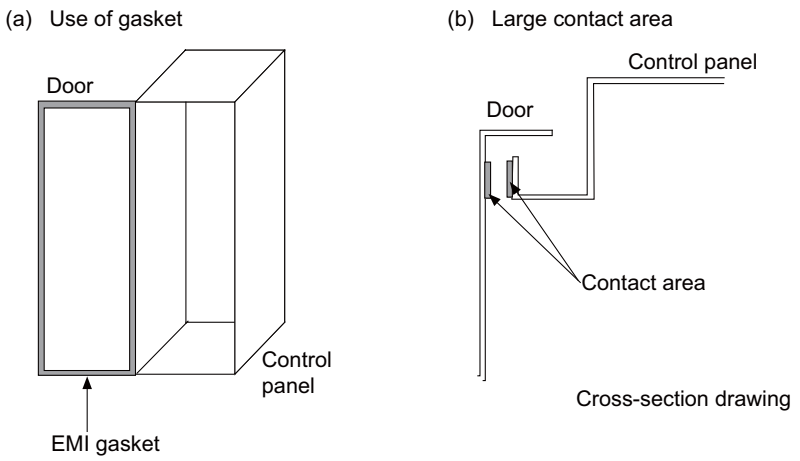

(Note 1) When not using a gasket, ground the control panel grounding with a grounding wire to lower the door's impedance.
(Note 2) Using screws to fix the plates that have been painted (attachment of packing) is the same as an insulated state. Remove the paint and fix the screws.

22.4.3 Measures for Power Supply

(1) Shield the power supply section and insert a filter to prevent the noise from flowing in or out. Selection of the noise filter capacity varies depending on the drive unit and devices to be used.

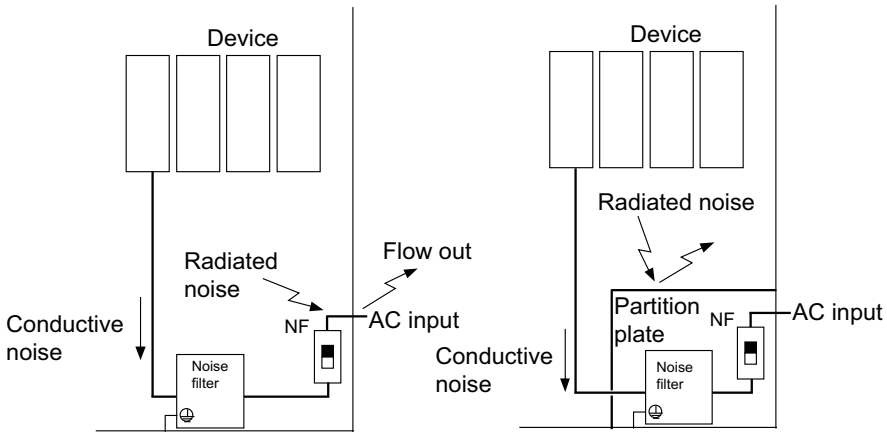

(Note 1) The conductive noise can be suppressed by inserting a noise filter, but the radiated noise will flow out.
(Note 2) The conductive and radiated noise can both be suppressed by adding a partition plate to the noise filter.

22.5 Measures for Wiring in Panel

Cables act as antennas to propagate unnecessary noise, and thus must be appropriately shielded and treated.
The following measures must be sufficiently considered for the cables that carry out high-speed communication.

22.5.1 Precautions for Wiring in Panel

(1) If the cables are led unnecessary in the panel, they will pick up noise. Pay attention to the device layout and wire length so that the wiring length is as short as possible.

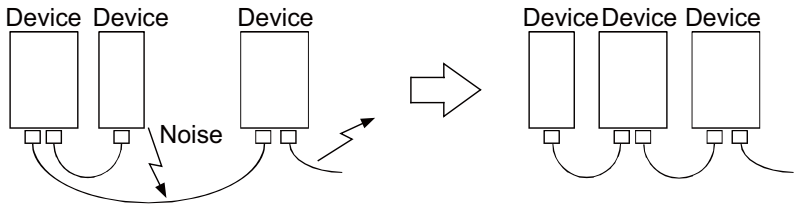

(2) Always connect the grounding wire to the FG terminal indicated on the device.
(3) Keep the distance between the drive line and detector cable to the drive section motor as far apart as possible when wiring.
(4) Do not lead the power supply wire around the panel without using a filter.

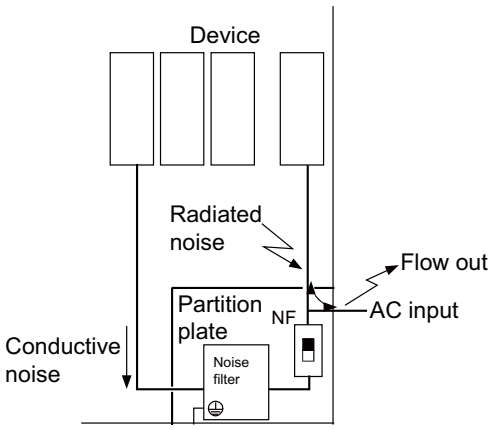

22.5.2 Shield Treatment of Cables

Use shielded cables for the cables wired outside the panel.
Use a shield clamp within 10cm of the lead-out port from the panel. (Refer to "EMC Countermeasure Parts: Shield Clamp Fitting".)

(1) Ethernet cable [J303 cable]

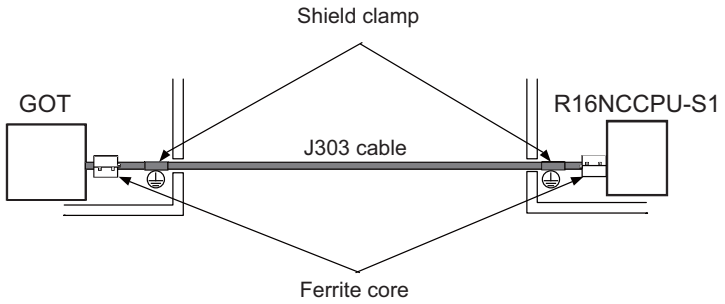

- Use a shielded cable. Use a shield clamp within 10cm from the panel's inlet/outlet.
- When using a ferrite core, install it on both ends of the connected units.

(Note) If the wiring is routed in the panel, no ferrite core is required.

22.6 EMC Countermeasure Parts

22.6.1 Shield Clamp Fitting

The effect can be improved by directly connecting the cable's shield sheath to the grounding plate as shown below.
Install the grounding plate near the outlet (within 10 cm) of each panel, and press against the grounding plate with the clamp fitting.
If the cables are thin, several can be bundled and clamped together.
To provide sufficient frame ground, install the grounding plate directly on the cabinet or connect with a grounding wire.

	A	B	C	Enclosed fittings
Ground Plate #D	100	86	30	Clamp fitting A×2
Ground Plate #E	70	56	-	Clamp fitting B×1

	L1 (maximum dimension when it is open)	L2 (reference dimension)
Clamp fitting A	25	(77)
Clamp fitting B	12	(54)

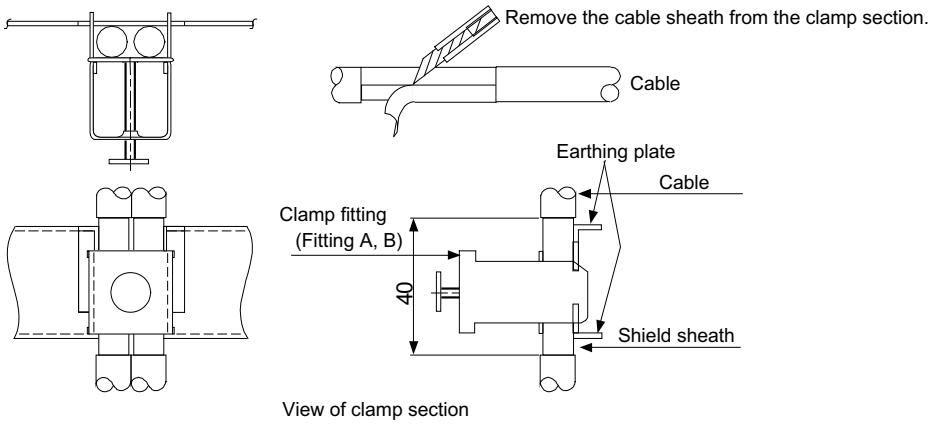

・Outline drawing

Earthing plate

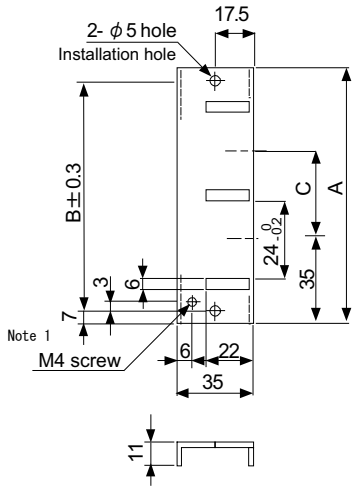

Clamp fitting

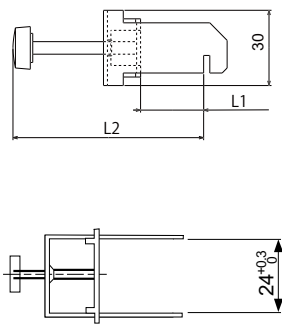

[Unit: mm]

(Note 1) Screw hole for wiring to earthing plate in cabinet.
(Note 2) The earthing plate thickness is 1.6mm.

22.6.2 Ferrite Core

The ferrite core is mounted integrally with the plastic case.
This can be installed with one touch without cutting the interface cable or power supply cable.
This ferrite core is effective for common mode noise, and countermeasures for noise can be taken without affecting the quality of the signal.

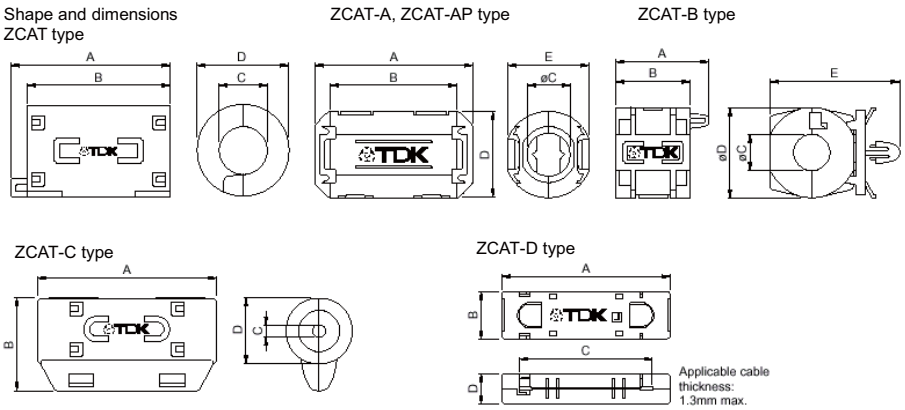

Recommended ferrite core: TDK ZCAT Series

Unit: mm

Part Name	A	B	φC	φD	E	Applicable cable outer diameter	Mass (g)
ZCAT1518-0730-M(-BK) (*1)	22±1	18±1	7±1	15±1	-	7 maximum	6
ZCAT1518-0730(BK) (*2)	22±1	18±1	7±1	15±1	-	7 maximum	6
ZCAT2017-0930-M(-BK)	21±1	17±1	9±1	20±1	-	9 maximum	11
ZCAT2032-0930-M(-BK) (*1)	36±1	32±1	9±1	19.5±1	-	9 maximum	22
ZCAT2032-0930(-BK) (*2)	36±1	32±1	9±1	19.5±1	-	9 maximum	22
ZCAT2132-1130-M(-BK) (*1)	36±1	32±1	11±1	20.5±1	-	11 maximum	22
ZCAT2132-1130(-BK) (*2)	36±1	32±1	11±1	20.5±1	-	11 maximum	22
ZCAT3035-1330-M(-BK) (*1)	39±1	34±1	13±1	30±1	-	13 maximum	63
ZCAT3035-1330(-BK) (*2)	39±1	34±1	13±1	30±1	-	13 maximum	63
ZCAT1525-0430AP-M(-BK)	25±1	20±1	4±1	15±1	11.5±1	2.5 to 4 (USB)	7
ZCAT1325-0530A-M(-BK) (*1)	25±1	20±1	5±1	12.8±1	11.2±1	3 to 5 (USB)	7
ZCAT1325-0530A(-BK)	25±1	20±1	5±1	12.8±1	11.2±1	3 to 5 (USB)	7
ZCAT1730-0730A-M(-BK)	30±1	23±1	7±1	16.5±1	15±1	4 to 7 (USB)	12
ZCAT2035-0930A-M(-BK) (*1)	35±1	28±1	9±1	19.5±1	17.4±1	6 to 9	22
ZCAT2035-0930A(-BK)	35±1	28±1	9±1	19.5±1	17.4±1	6 to 9	22
ZCAT2235-1030A-M(-BK)	35±1	28±1	10±1	21.5±1	20±1	8 to 10	27
ZCAT2436-1330A-M(-BK)	36±1	29±1	13±1	23.5±1	22±1	10 to 13	29
ZCAT2017-0930B-M(-BK)	21±1	17±1	9±1	20±1	28.5±1	9 maximum	12
ZCAT2749-0430C-M(-BK)	49±1	27±1	4.5±1	19.5±1	-	4.5 maximum	26
ZCAT4625-3430D(-BK)	45.5±1	24.5±1	34±1	12±1	-	26 For core flat cable	32
ZCAT4625-3430DT(-BK) (*3)	45.5±1	24.5±1	34±1	13±1	-	26 For core flat cable	32
ZCAT6819-5230D(-BK)	67.5±1	18.5±1	52±1	16±1	-	40 For core flat cable	58
ZCAT6819-5230DT(-BK) (*3)	67.5±1	18.5±1	52±1	17±1	-	40 For core flat cable	58

(*1) The M stamp is attached.
(*2) A fixing band is attached at shipment.
(*3) The core is fixed with double-sided tape. (The tape is enclosed with the part.)

- ZCAT-B type: Cabinet fixing type installation hole ϕ 4.8 to 4.9 mm, plate thickness 0.5 to 2 mm
- ZCAT-AP, ZCAT-C type: Structure that prevents easy opening after case is closed.

Ferrite Core Installation Method

Connect the ferrite cores in the following manner.

(1) Wind a cable once around the ferrite core.
(2) Attach the case by pressing until a click sound is heard.
(3) Fix with a binding band so that the ferrite core position does not shift.

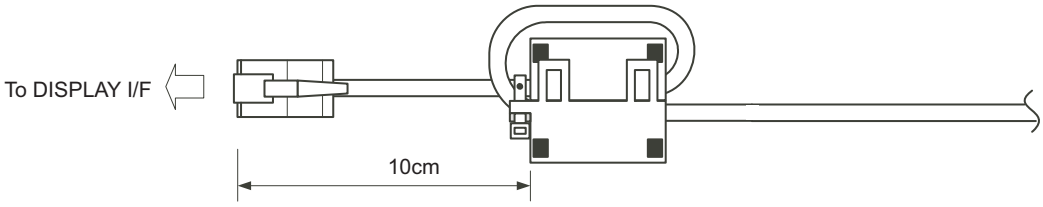

(Note) Ferrite cores are not required for wiring in panel.

22.6.3 Surge Absorber

Make sure that the surge does not directly enter the AC line of the general-purpose stabilized power supply (user-prepared) supplying power to the control unit and DIO. Select a product equivalent to or higher than the following products for the surge absorber. Refer to the manufacturer catalog for detailed characteristics, outline and connection methods of the surge absorber.

(1) Part name: RSPD-250-U4
Manufacturer: OKAYA ELECTRIC INDUSTRIES

Rated Voltage (50/60Hz)	DC Breakdown voltage	Voltage protection level	Normal discharge current	Maximum discharge current	Surge current life
250VAC (Three phase)	700V±25%	1.3kV	8/20μs 2.5kA	8/20μs 5kA	Approximately 300 times 8/20μs-1kA

Outline drawing

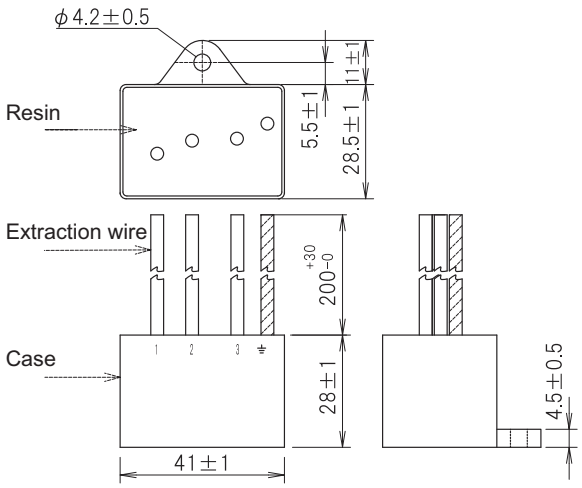

Circuit drawing

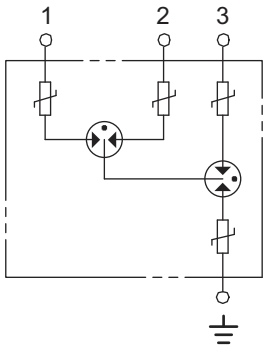

(2) Example of surge absorber installation

An example of installing the surge absorber in the machine control panel is shown below.
A short-circuit fault will occur in the surge absorber if a surge exceeding the tolerance is applied. Thus, install a circuit protection breaker in the stage before the surge absorber. Note that almost no current flows to the surge absorber during normal use. Therefore, a breaker installed as the circuit protection for another device can be used with the surge absorber.

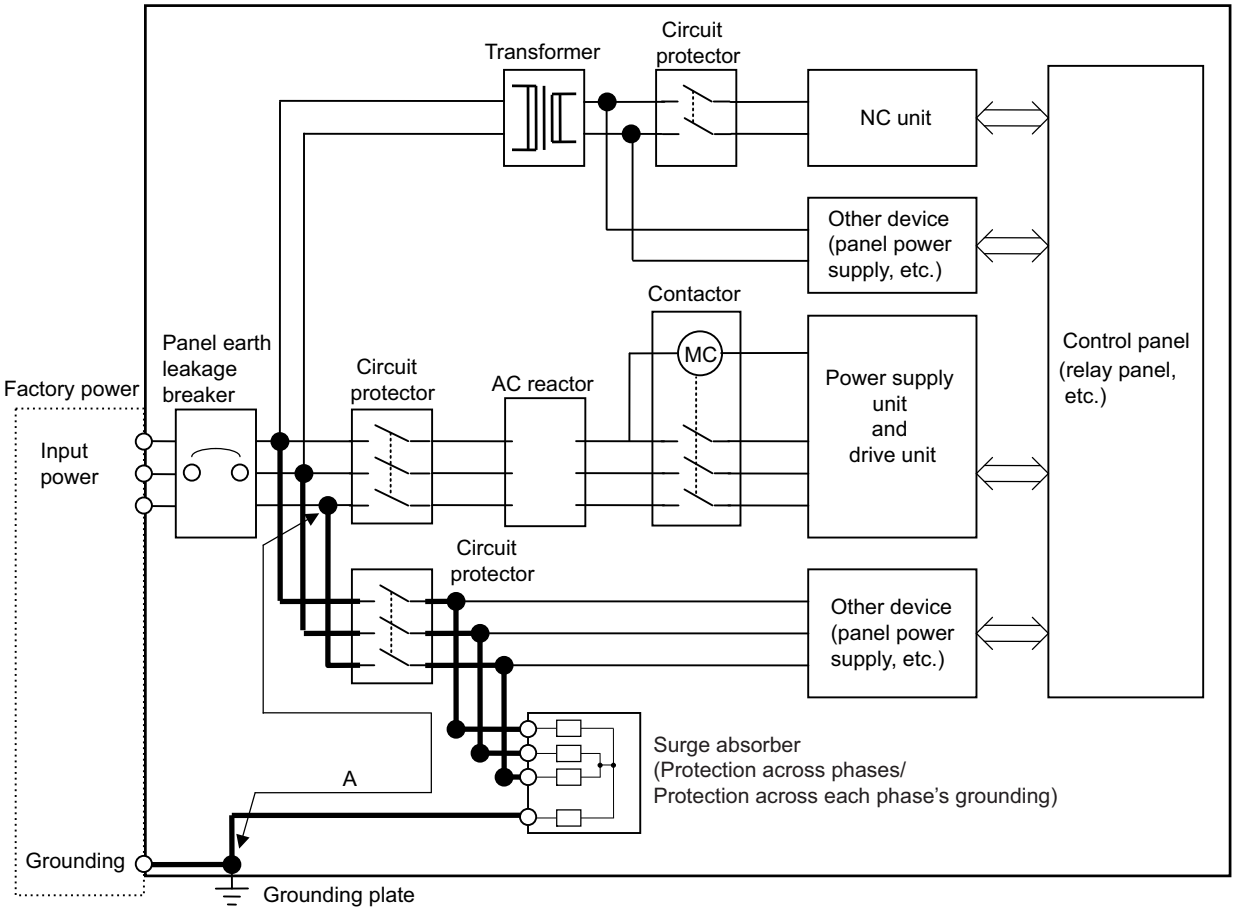

Surge absorber installation

⚠ CAUTION

1. **The wires from the surge absorber should be connected without extensions.**
2. **If the surge absorber cannot be installed just with the enclosed wires, keep the wiring length of A to 2m or less. If the wires are long, the surge absorber's performance may drop and inhibit protection of the devices in the panel.**
3. **Surge absorber to be selected varies depending on input power voltage.**
4. **Do not insert the surge absorber in the place with a lot of harmonic components.**

22.6.4 Selection of Stabilized Power Supply

Consider the following characteristics when selecting the stabilized power supply (prepared by machine manufacturer). Use a power supply that complies with CE Marking or that follows the safety standards given below.

Stabilized power supply selection items

Item		Standard setting	Remarks
Output	Voltage fluctuation	±5%	±5% or less of 24VDC output
	Ripple noise	120 mV (maximum)	
	Spike noise	500 mV (maximum)	
Output current		——	Refer to the maximum current consumption of the unit in use and calculate.
Output holding time		20 ms (min)	Instantaneous power failure time (AC side)

Standards

Safety Standards: UL1950, CSA C22.2 No. 234 approved, IEC950 compliant
Noise Terminal Voltage: FCC Class A, VCCI-Class A
High Harmonics Current Restrictions: IEC61000-3-2

23

Appx.3: Restrictions for Lithium Batteries

23.1 Restriction for Packing

When transporting lithium batteries with means such as by air transport, measures corresponding to the United Nations Dangerous Goods Regulations (hereafter called "UN Regulations") must be taken.
The UN Regulations classify the batteries as dangerous goods (Class 9) or not dangerous goods according to the lithium metal content. To ensure safety during transportation, lithium batteries (battery unit) directly exported from Mitsubishi are packaged in a dedicated container (UN package) for which safety has been confirmed.
When the customer is transporting these products with means subject to the UN Regulations, such as air transport, the shipper must follow the details explained in the section "Transportation Restrictions for Lithium Batteries: Handling by User".
The followings are restrictions for transportation. Each restriction is specified based on the recommendation of the United Nations.

Area	Transportation method	Restriction	Special clause
World	Air	ICAO, IATA	-
World	Marine	IMO	188
United States	All (air, marine, land)	DOT	49 CFR 173.185
Europe	land	RID, ADR	-

23.1.1 Target Products

The following Mitsubishi NC products use lithium batteries. If the lithium metal content exceeds 1g for battery cell and 2g for battery, the battery is classified as dangerous good (Class9).
In order to avoid an accidental actuation during the transportation, all lithium battery products incorporated in a machinery or device must be fixed securely and must be shipped with wrapped over the outer package as to prevent damage or short-circuits.

(1) Materials falling under Class 9

Mitsubishi type (Type for arrangement)	Battery type	Lithium metal content	Number of incorporated batteries	Application (Data backup)	Battery class	Outline dimension drawing
CR23500SE-CJ5	CR23500SE-CJ5	1.52g	-	For NC SRAM (M500)	Battery cell	Refer to "Battery Option" in the specification manual for drive unit you are using for the outline dimension drawing for servo.

(2) Materials not falling under Class 9

Mitsubishi type (Type for arrangement)	Battery type	Lithium metal content	Number of incorporated batteries	Application (Data backup)	Battery class	Outline dimension drawing
CR2032 (for built-in battery)	CR2032	0.067g	-	For NC SRAM/	Battery cell	Refer to "Battery Option" in the specification manual for drive unit you are using for the outline dimension drawing for servo.
CR2450 (for built-in battery)	CR2450	0.173g	-	For NC SRAM		
ER6, ER6V series (for built-in battery)	ER6, ER6V	0.65g	-	For NC SRAM/ servo encoder		
MR-BAT	ER17330V	0.48g	-	For servo encoder		
Q6BAT	Q6BAT	0.57g	-	For NC SRAM		
MDS-BAT6V1SET	2CR17335A	1.2g	2	For servo encoder	Battery	
MR-BAT6V1SET						

(Note) If the number of batteries exceeds 24 batteries for the battery cell or 12 batteries for the battery, the dedicated packing (for materials falling under Class 9) is required.

23.1.2 Handling by User

The shipper must confirm the latest IATA Dangerous Goods Regulations, IMDG Codes and laws and orders of the corresponding export country.
These should be checked by the company commissioned for the actual transportation.

IATA: International Air Transport Association
http://www.iata.org/
IMDG Code: A uniform international code for the transport of dangerous goods by seas determined by IMO (International Maritime Organization).
http://www.imo.org/

23.1.3 Reference

Refer to the following materials for details on the regulations and responses.
Guidelines regarding transportation of lithium batteries and lithium ion batteries

Battery Association of Japan
http://www.baj.or.jp/e/

23.2 Products Information Data Sheet (ER Battery)

MSDS system does not cover the product used in enclosed state. The ER battery described in this section applies to that product.
This description is applied to the normal use, and is provided as reference but not as guarantee.
This description is based on the lithium battery's (ER battery) hazardous goods data sheet (Products Information Data Sheet) which MITSUBISHI has researched, and will be applied only to the ER batteries described in "Transportation Restrictions for Lithium Batteries: Restriction for Packing".

(1) Outline of hazard

Principal hazard and effect	Not found.
Specific hazard	As the chemical substance is stored in a sealed metal container, the battery itself is not hazardous. But when the internal lithium metal attaches to human skin, it causes a chemical skin burn. As a reaction of lithium with water, it may ignite or forms flammable hydrogen gas.
Environmental effect	Not found.
Possible state of emergency	Damages or short-circuits may occur due to external mechanical or electrical pressures.

(2) First-aid measure

Inhalation	If a person inhales the vapor of the substance due to the battery damage, move the person immediately to fresh air. If the person feels sick, consult a doctor immediately.
Skin contact	If the content of the battery attaches to human skin, wash off immediately with water and soap. If skin irritation persists, consult a doctor.
Eye contact	In case of contact with eyes due to the battery damage, rinse immediately with a plenty of water for at least 15 minutes and then consult a doctor.
Ingestion	If swallowed, consult a doctor immediately.

(3) Fire-fighting measure

Appropriate fire-extinguisher	Dry sand, dry chemical, graphite powder or carbon dioxide gas
Special fire-fighting measure	Keep the battery away from the fireplace to prevent fire spreading.
Protectors against fire	Fire-protection gloves, eye/face protector (face mask), body/skin protective cloth

(4) Measure for leakage

Environmental precaution	Dispose of them immediately because strong odors are produced when left for a long time.
How to remove	Get them absorbed into dry sand and then collect the sand in an empty container.

(5) Handling and storage

Handling	**Cautions for safety handling**	Do not peel the external tube or damage it. Do not dispose of the battery in fire or expose it to heat. Do not immerse the battery in water or get it wet. Do not throw the battery. Do not disassemble, modify or transform the battery. Do not short-circuit the battery.
Storage	**Appropriate storage condition**	Avoid direct sunlight, high temperature and high humidity. (Recommended temp. range: +5 to +35°C, humidity: 70%RH or less)
	Material to avoid	Flammable or conductive material (Metal: may cause a short-circuit)

(6) Physical/chemical properties

Appearance	Physical form	Solid
	Shape	Cylinder type
	Smell	Odorless
	pH	Not applicable (insoluble)
	Boiling point/Boiling range, Melting point, Decomposition temperature, Flash point	No information

(7) Stability and reactivity

Stability	Stable under normal handling condition.
Condition to avoid	Do not mix multiple batteries with their terminals uninsulated. This may cause a short-circuit, resulting in heating, bursting or ignition.
Hazardous decomposition products	Irritative or toxic gas is emitted in the case of fire.

(8) Toxicological information

As the chemical substance is stored in a sealed metal container, the battery has no harmfulness. Just for reference, the table below describes the main substance of the battery.

< Lithium metal >

Acute toxicity	No information
Local effect	Corrosive action in case of skin contact

< Thionyl chloride >

Acute toxicity	Lc_{50}: 500ppm (inhaled administration to rat)
Local effect	The lungs can be damaged by chronic cough, dyspnea and asthma.

< Aluminum chloride >

Acute toxicity	L_{D50}: 3700ppm (oral administration to rat)
Local effect	Not found.

< Lithium chloride >

Acute toxicity	L_{D50}: 526ppm (oral administration to rat)
Local effect	The central nerves and kidney can be influenced.

< Carbon black >

Acute toxicity	L_{D50}: 2,000mg/kg > (rat)
Carcinogenicity	LARC group 2 (suspected of being carcinogenic)

(9) Ecological information

Mobility, Persistence/ Decomposability, Bio-accumulation potential, Ecological toxicity	Not found.

(10) Caution for disposal

Dispose of the battery following local laws or regulations.
Pack the battery properly to prevent a short-circuit and avoid contact with water.

23.3 Forbiddance of Transporting Lithium Battery by Passenger Aircraft Provided in the Code of Federal Regulation

This regulation became effective from Dec.29, 2004. This law is a domestic law of the United States, however it also applies to the domestic flight and international flight departing from or arriving in the United States. Therefore, when transporting lithium batteries to the United State, or within the United State, the shipper must take measures required to transport lithium batteries. Refer to the Federal Register and the code of Federal Regulation for details.
When transporting primary lithium battery by cargo aircraft, indicate that transportation by passenger aircraft is forbidden on the exterior box.
"Lithium Metal batteries forbidden for transport aboard Passenger aircraft"

23.4 California Code of Regulation "Best Management Practices for Perchlorate Materials"

When any products that contain primary lithium batteries with perchlorate are shipped to or transported through the State of California, they are subject to the above regulation.The following information must be indicated on the package, etc. of the products that contain primary lithium batteries (with a perchlorate content of 6 ppb or higher).
"Perchlorate Meterial-special handling may apply. See http://www.dtsc.ca.gov/hazardouswaste/perchlorate"

23.5 Restriction Related to EU Battery Directive

EU Battery Directive (2006/66/EC) has been enforced since September 26th in 2008. Hereby, battery and machinery incorporating battery marketed in European Union countries must be in compliance with the EU Battery Directive.
Lithium battery provided by MITSUBISHI are subjected to this restriction.

23.5.1 Important Notes

Follow the instruction bellow as shipping products incorporating MITSUBISHI device.

(1) When shipping products incorporating MITSUBISHI device any time later than September 26th, 2008, the symbol mark shown as Figure 1 in section "Information for End-user" is required to be attached on the machinery or on the package. Also, the explanation of the symbol must be added.

(2) Machinery with battery and maintenance battery produced before the EU Battery Directive are also subjected to the restriction. When shipping those products to EU countries later than September 26th, 2008, follow the instruction explained in (1).

23.5.2 Information for End-user

Figure 1

Note: This symbol mark is for EU countries only.

This symbol mark is according to the directive 2006/66/EC Article 20 Information for end-users and Annex II.

Your MITSUBISHI ELECTRIC product is designed and manufactured with high quality materials and components which can be recycled and/or reused. This symbol means that batteries and accumulators, at their end-of-life, should be disposed of separately from your household waste.

If a chemical symbol is printed beneath the symbol shown above, this chemical symbol means that the battery or accumulator contains a heavy metal at a certain concentration. This will be indicated as follows:Hg: mercury (0,0005%), Cd: cadmium (0,002%), Pb: lead (0,004%)

In the European Union there are separate collection systems for used batteries and accumulators. Please, dispose of batteries and accumulators correctly at your local community waste collection/recycling centre.

Please, help us to conserve the environment we live in!

24

Appx.4: Precautions for Compliance to UL/c-UL Standards

(1) Selection of external 24VDC power supply unit (The unit shall be prepared by the machine tool builder.)

This NC system complies with the UL Standards on the condition that the stabilized power supply unit supplying 24VDC to each unit is a UL-approved part of SELV/limited power LPS or Class 2. For initial setup, see the chapter of "Flow of the initial setup".

Use a UL-approved part for the stabilized power supply unit supplying 24VDC to each unit.

(2) Unit ambient temperature

CNC CPU module complies with the UL Standards on the condition that the unit is used at a temperature less than the maximum ambient temperature given in "4.1 Installation Environment Conditions". Make sure that the maximum ambient temperature of each unit does not exceed the temperature given in "4.1 Installation Environment Conditions".

Revision History

Date of revision	Manual No.	Revision details
Oct. 2016	IB(NA)1501452-A	First edition created.
Sep. 2017	IB(NA)1501452-B	The descriptions were corrected to correspond with the system software A2 version. - The following contents were changed. 10.1.3 Setting Multi-CPU Parameters 11.3 Setting Multi-CPU Parameters 12.2 Setting the Parameters for the Machine Specifications 12.5.1 Setting the Rotary Switch 12.5.2 Setting the DIP Switch - Other mistakes were corrected.
Sep. 2018	IB(NA)1501452-C	The descriptions were revised corresponding to S/W version B0 of MITSUBISHI CNC C80 series. - Added the following chapter. 4.10 GOT (Panel Cut Dimensions) 13 Setting of Inter-CPU Features 18 Appx.1: Protection Setting - Deleted the following chapter. 7.3.7 CNV2E-MB Cable - Changed the following contents. 3.1 CNC Control Unit 4.6 Dual Signal Module 8.1 Flow of the Initial Setup 10.1.3 Setting Multi-CPU Parameters 11.3 Setting Multi-CPU Parameters 12.4.1 Setting the Rotary Switch 17 Data Backup and Restoration - Due to addition of the chapters as above, the existing chapter numbers were corrected. - Also, corrected wrong indications.

Date of revision	Manual No.	Revision details
Jan. 2020	IB(NA)1501452-D	The descriptions were revised corresponding to S/W version B5 of C80 series. - Added the following chapter. 13.1.5 Grid-on Method 15 Setting the Machine Error Compensation 16 Setting the Position Switches 17 Setting the Backlash Compensation - Deleted the following chapter. 13 Setting of Inter-CPU Features - Changed the following contents. 3.1 CNC Control Unit 3.2.1 GT27 3.2.2 GT25 3.3 Peripheral Device 4.5 CNC CPU Module 4.10 GOT (Panel Cut Dimensions) 6.3 Connecting the Emergency Stop Signal 7.1 Symbols for Writing Cable Drawings 7.2.1 F020/F021/F022 Cable 7.2.2 G020/G021/G022 Cable 7.2.3 H010 Cable 7.2.4 H101 Cable 7.2.5 H300 Cable 7.2.6 H310 Cable 7.2.7 H401 Cable 7.2.8 H501 Cable 7.2.9 J303 Cable 7.3.3 CNP3EZ-2P/CNP3EZ-3P Cable 7.3.15 SH21 Cable 8.1 Flow of the Initial 10.1.3 Setting Multi-CPU Parameters 12.7.2 NC Analyzer2 13.1 Adjusting the Absolute Position Detection System 13.1.2 Basic Position Alignment Method II 13.1.3 Machine End Stopper Method: Automatic Initialization 13.1.4 Machine End Stopper Method: Manual Initialization 15.3 Deceleration Check for Opposite Direction Movement Reversal - The chapter numbers were corrected. Due to addition of the chapters as above, the existing chapter numbers were corrected. - Other mistakes were corrected.

Date of revision	Manual No.	Revision details
Aug. 2020	IB(NA)1501452-E	The descriptions were revised corresponding to S/W version B7 of C80 series. - Added the following chapter. 19 Synchronous Control - Changed the following contents. 4.6 Dual Signal Module 12.6 Setting Up without Connecting to the Motor/Drive Units at the Startup of Drive Unit 13.1 Adjusting the Absolute Position Detection System 13.1.1 Basic Position Alignment Method I 13.1.2 Basic Position Alignment Method II 13.1.3 Machine End Stopper Method: Automatic Initialization 13.1.4 Machine End Stopper Method: Manual Initialization 13.1.5 Grid-on Method 13.1.6 Dog-type 14 Setting the Tool Entry Prohibited Range 14.2.9 Precautions 18.6 Precautions - The chapter titles were corrected. 14.1 Stroke End 14.2 Stored Stroke Limit - The chapter numbers were corrected. Due to addition of the chapters as above, the existing chapter numbers were corrected. - Other mistakes were corrected.

Global Service Network

AMERICA

MITSUBISHI ELECTRIC AUTOMATION INC. (AMERICA FA CENTER)
Central Region Service Center (Chicago)
500 CORPORATE WOODS PARKWAY, VERNON HILLS, ILLINOIS 60061, U.S.A.
TEL: +1-847-478-2500 / FAX: +1-847-478-2650
Minneapolis, MN Service Satellite
Detroit, MI Service Satellite
Grand Rapids, MI Service Satellite
Lima, OH Service Satellite
Cleveland, OH Service Satellite
Indianapolis, IN Service Satellite
St. Louis, MO Service Satellite

South/East Region Service Center (Georgia)
1845 SATTELITE BOULEVARD STE. 450, DULUTH, GEORGIA 30097, U.S.A.
TEL +1-678-258-4529 / FAX +1-678-258-4519
Charleston, SC Service Satellite
Charlotte, NC Service Satellite
Raleigh, NC Service Satellite
Dallas, TX Service Satellite
Houston, TX Service Satellite
Hartford, CT Service Satellite
Knoxville, TN Service Satellite
Nashville, TN Service Satellite
Baltimore, MD Service Satellite
Pittsburg, PA Service Satellite
Newark, NJ Service Satellite
Syracuse, NY Service Satellite
Ft. Lauderdale, FL Service Satellite
Lafayette, LA Service Satellite

Western Region Service Center (California)
5900-B KATELLA AVE. - 5900-A KATELLA AVE. CYPRESS, CALIFORNIA 90630, U.S.A.
TEL: +1-714-699-2625 / FAX: +1-847-478-2650
San Francisco, CA Service Satellite
Seattle, WA Service Satellite
Denver, CO Service Satellite

Canada Region Service Center (Tronto)
4299 14TH AVENUE MARKHAM, ONTARIO L3R OJ2, CANADA
TEL: +1-905-754-3805 / FAX: +1-905-475-7935
Edmonton, AB Service Satellite
Montreal, QC Service Satellite

Mexico Region Service Center (Queretaro)
Parque Tecnológico Innovación Querétaro, Lateral Carretera Estatal 431, Km 2+200, Lote 91 Modulos 1 y 2
Hacienda la Machorra, CP 76246, El Marqués, Querétaro, México
TEL: +52-442-153 6050
Monterrey, NL Service Satellite
Mexico City, DF Service Satellite
Aguascalientes, AGS, Service Satellite

BRAZIL

MITSUBISHI ELECTRIC DO BRASIL COMÉRCIO E SERVIÇOS LTDA.
Votorantim Office
AV. GISELE CONSTANTINO,1578, PARQUE BELA VISTA, VOTORANTIM-SP, BRAZIL CEP:18.110-650
TEL: +55-15-3023-9000
Blumenau Santa Catarina office
MAQSERVICE – Canoas, RS Service Satellite

EUROPE

MITSUBISHI ELECTRIC EUROPE B.V.
European Service Headquarters (Dusseldorf, GERMANY)
Mitsubishi-Electric-Platz 1 40882 RATINGEN, GERMANY
TEL: +49-2102-486-5000 / FAX: +49-2102-486-5910

South Germany Service Center (Stuttgart)
SCHELMENWASENSTRASSE 16-20, 70567 STUTTGART, GERMANY
TEL: + 49-711-770598-123 / FAX: +49-711-770598-141

France Service Center (Paris)
25, BOULEVARD DES BOUVETS, 92741 NANTERRE CEDEX FRANCE
TEL: +33-1-41-02-83-13 / FAX: +33-1-49-01-07-25

France Service Satellite (Lyon)
120, ALLEE JACQUES MONOD 69800 SAINT PRIEST FRANCE
TEL: +33-1-41-02-83-13 / FAX: +33-1-49-01-07-25

Italy Service Center (Milan)
CENTRO DIR. COLLEONI, PALAZZO SIRIO, VIALE COLLEONI 7, 20864 AGRATE BRIANZA (MB) ITALY
TEL: +39-039-6053-342 / FAX: +39-039-6053-206

Italy Service Satellite (Padova)
VIA G. SAVELLI, 24 - 35129 PADOVA, ITALY
TEL: +39-039-6053-342 / FAX: +39-039-6053-206

U.K. Service Center
TRAVELLERS LANE, HATFIELD, HERTFORDSHIRE, AL10 8XB, U.K.
TEL: +49-2102-486-5000 / FAX: +49-2102-486-5910

Spain Service Center
CTRA. RUBI, 76-80 8174 SAINT CUGAT DEL VALLES, BARCELONA SPAIN
TEL: +34-935-65-2236 / FAX: +34-935-89-1579

Poland Service Center
UL.KRAKOWSKA 50, 32-083 BALICE, POLAND
TEL: +48-12-347-6500 / FAX: +48-12-630-4701

Hungary Service Center
MADARASZ IRODAPARK, MADARASZ VIKTOR UT 47-49, 1138 BUDAPEST, HUNGARY
TEL: +48-12-347-6500 / FAX: +48-12-630-4701

Turkey Service Center
MITSUBISHI ELECTRIC TURKEY A.Ş
SERIFALI MAHALLESI NUTUK SOKAK. NO.41 34775
UMRANIYE, ISTANBUL, TURKEY
TEL: +90-216-969-2500 / FAX: +90-216-526-3995

Czech Republic Service Center
AutoCont Control Systems s.r.o (Service Partner)
KAFKOVA 1853/3, 702 00 OSTRAVA 2, CZECH REPUBLIC
TEL: +420-59-5691-185 / FAX: +420-59-5691-199

Russia Service Center
MITSUBISHI ELECTRIC RUSSIA LLC
LETNIKOVSKAYA STREET 2, BLD.1, 5TH 115114 MOSCOW, RUSSIA
TEL: +7-495-721-2070 / FAX: +7-495-721-2071

Sweden Service Center
HAMMARBACKEN 14, P.O.BOX 750 SE-19127, SOLLENTUNA, SWEDEN
TEL: +46-8-6251000 / FAX: +46-8-966877

Bulgaria Service Center
AKHNATON Ltd. (Service Partner)
4 ANDREJ LJAPCHEV BLVD. POB 21, BG-1756 SOFIA, BULGARIA
TEL: +359-2-8176009 / FAX: +359-2-9744061

Ukraine Service Center (Kiev)
CSC Automation Ltd. (Service Partner)
4 B, YEVHENA SVERSTYUKA STR., 02002 KIEV, UKRAINE
TEL: +380-44-494-3344 / FAX: +380-44-494-3366

Belarus Service Center
TECHNIKON Ltd. (Service Partner)
NEZAVISIMOSTI PR.177, 220125 MINSK, BELARUS
TEL: +375-17-393-1177 / FAX: +375-17-393-0081

South Africa Service Center
MOTIONTRONIX (Service Partner)
P.O. BOX 9234, EDLEEN, KEMPTON PARK GAUTENG, 1625, SOUTH AFRICA
TEL: +27-11-394-8512 / FAX: +27-11-394-8513

ASEAN

MITSUBISHI ELECTRIC ASIA PTE. LTD. (ASEAN FA CENTER)
Singapore Service Center
307 ALEXANDRA ROAD #05-01/02 MITSUBISHI ELECTRIC BUILDING SINGAPORE 159943
TEL: +65-6473-2308 / FAX: +65-6476-7439

PHILIPPINE

MELCO FACTORY AUTOMATION PHILIPPINES INC.
Head Office
128 LOPEZ RIZAL STREET, BRGY., HIGHWAY HILLS, MANDALUYONG CITY , MM PHILIPPINES 1550
TEL: +63-2-8256-8042 / FAX: +632-8637-2294

Philippines Service Center
KM.23 WEST SERVICE ROAD SSH, CUPANG ,MUNTINLUPA CITY PHILIPPINES
TEL: +63-2-8807-0420 / FAX: +63-2-8842-5202

VIETNAM

MITSUBISHI ELECTRIC VIETNAM CO.,LTD.
Vietnam Ho Chi Minh Service Center
11TH & 12TH FLOOR, VIETTEL TOWER B, 285 CACH MANG THANG 8 STREET, WARD 12, DISTRICT 10, HO CHI MINH CITY, VIETNAM
TEL: +84-28-3910 5945 / FAX: +84-28-3910 5947

Vietnam Hanoi Service Center
24TH FLOOR, HANDICO TOWER, PHAM HUNG ROAD, ME TRI HA, ME TRI WARD, NAM TU LIEM DISTRICT, HA NOI CITY, VIETNAM
TEL: +84-24-3937-8075 / FAX: +84-24-3937-8076

INDONESIA

PT. MITSUBISHI ELECTRIC INDONESIA
Indonesia Service Center (Cikarang)
JL. KENARI RAYA BLOK G2-07A, DELTA SILICON 5, LIPPO CIKARANG - BEKASI 17550, INDONESIA
TEL: +62-21-2961-7797 / FAX: +62-21-2961-7794

MALAYSIA

MITSUBISHI ELECTRIC SALES MALAYSIA SDN. BHD.
Malaysia Service Center (Kuala Lumpur Service Center)
LOT 11, JALAN 219, P.O BOX 1036, 46860 PETALING JAYA, SELANGOR DARUL EHSAN. MALAYSIA
TEL: +60-3-7960-2628 / FAX: +60-3-7960-2629
Johor Bahru Service Satellite

THAILAND

MITSUBISHI ELECTRIC FACTORY AUTOMATION (THAILAND) CO.,LTD.
Thailand Service Center (Bangkok)
101, TRUE DIGITAL PARK OFFICE, 5TH FLOOR, SUKHUMVIT ROAD, BANGCHAK, PHRAKHANONG, BANGKOK, 10260 THAILAND
TEL: +66-2-092-8600 / FAX: +66-2-043-1231-33
Bowin Service Center (Chonburi)
Korat Service Center

INDIA

MITSUBISHI ELECTRIC INDIA PVT., LTD.
CNC Technical Center (Bangalore)
PLOT NO. 56, 4TH MAIN ROAD, PEENYA PHASE 3,
PEENYA INDUSTRIAL AREA, BANGALORE 560058, KARNATAKA, INDIA
TEL : +91-80-4655-2121 / FAX : +91-80-4655-2147
Chennai Service Satellite
Coimbatore Service Satellite
Hyderabad Service Satellite

North India Service Center (Gurgaon)
2ND FLOOR, TOWER A&B, DLF CYBER GREENS, DLF CYBER CITY,
DLF PHASE-III, GURGAON- 122 002, HARYANA, INDIA
TEL : +91-124-4630 300 / FAX : +91-124-4630 399
Ludhiana Service Satellite
Panth Nagar Service Satellite
Delhi Service Satellite
Jamshedpur Service Satellite
Manesar Service Satellite

West India Service Center (Pune)
ICC-Devi GAURAV TECHNOLOGY PARK, UNIT NO.402, FOURTH FLOOR, NORTH WING,
SURVEY NUMBER 191-192 (P), NEXT to INDIAN CARD CLOTHING COMPANY Ltd,
OPP. VALLABH NAGAR, PIMPRI, PUNE- 411 018, MAHARASHTRA, INDIA
TEL : +91-20-6819 2274 / FAX : +91-20-4624 2100
Kolhapur Service Satellite
Aurangabad Service Satellite
Mumbai Service Satellite

West India Service Center (Ahmedabad)
204-209, 2ND FLOOR, 31FIVE, CORPORATE ROAD PRAHLADNAGAR,
AHMEDABAD -380015, GUJARAT, INDIA
TEL : + 91-79-6777 7888
Rajkot Service Satellite

CHINA

MITSUBISHI ELECTRIC AUTOMATION (CHINA) LTD. (CHINA FA CENTER)
CNC Call Center
TEL: +86-400-921-5130

Shanghai Service Center
1-3,5-10,18-23/F, NO.1386 HONG QIAO ROAD, CHANG NING QU,
SHANGHAI 200336, CHINA
TEL: +86-21-2322-3030 / FAX: +86-21-2322-3000*8422
Qingdao Service Center
Suzhou Service Center
Wuhan Service Center
Ningbo Service Center
Hefei Service Center
Beijing Service Center
Tianjin Service Center
Xian Service Center
Dalian Service Center
Chengdu Service Center

Shenzhen Service Center
LEVEL8, GALAXY WORLD TOWER B, 1 YABAO ROAD, LONGGANG DISTRICT,
SHENZHEN 518129, CHINA
TEL: +86-755-2399-8272 / FAX: +86-755-8229-3686
Dongguan Service Center
Xiamen Service Center

KOREA

MITSUBISHI ELECTRIC AUTOMATION KOREA CO., LTD. (KOREA FA CENTER)
Korea Service Center
8F GANGSEO HANGANG XI-TOWER A, 401 YANGCHEON-RO, GANGSEO-GU,
SEOUL 07528 KOREA
TEL: +82-2-3660-9609 / FAX: +82-2-3664-8668
Korea Daegu Service Satellite

TAIWAN

MITSUBISHI ELECTRIC TAIWAN CO., LTD. (TAIWAN FA CENTER)
Taiwan Taichung Service Center
NO.8-1, INDUSTRIAL 16TH RD., TAICHUNG INDUSTRIAL PARK, SITUN DIST.,
TAICHUNG CITY 40768, TAIWAN
TEL: +886-4-2359-0688 / FAX: +886-4-2359-0689

Taiwan Taipei Service Center
10F, NO.88, SEC.6, CHUNG-SHAN N. RD., SHI LIN DIST., TAIPEI CITY 11155, TAIWAN
TEL: +886-2-2833-5430 / FAX: +886-2-2833-5433

Taiwan Tainan Service Center
11F-1., NO.30, ZHONGZHENG S. ROAD, YONGKANG DISTRICT, TAINAN CITY 71067, TAIWAN
TEL: +886-6-252-5030 / FAX: +886-6-252-5031

OCEANIA

MITSUBISHI ELECTRIC AUSTRALIA PTY. LTD.
Oceania Service Center
348 VICTORIA ROAD, RYDALMERE, N.S.W. 2116 AUSTRALIA
TEL: +61-2-9684-7269/ FAX: +61-2-9684-7245

Notice

Every effort has been made to keep up with software and hardware revisions in the contents described in this manual. However, please understand that in some unavoidable cases simultaneous revision is not possible. Please contact your Mitsubishi Electric dealer with any questions or comments regarding the use of this product.

MITSUBISHI ELECTRIC CORPORATION
HEAD OFFICE : TOKYO BLDG.,2-7-3 MARUNOUCHI,CHIYODA-KU,TOKYO 100-8310,JAPAN

MODEL	C80 Series
MODEL CODE	100-562
Manual No.	IB-1501452

IB(NA)1501452(ENG)-E(2008)MEE
Made in JAPAN