MITSUBISHI ELECTRIC

Changes for the Better

Numerical Control (CNC)

Maintenance Manual

M800V/M80V Series

IB-1501617(ENG)-C

Introduction

This manual describes the maintenances for Mitsubishi Electric CNC.
Read this manual thoroughly and understand the product's functions and performance before use.

Supported models of this manual are as follows:

Supported models	Abbreviations in this manual
M800VW Series	M850VW, M830VW
M800VS Series	M850VS, M830VS
M80VW Series	M80VW
M80V Series	M80V TypeA, M80V TypeB

Abbreviations for model names used in this manual are as follows:

Abbreviations	Supported models
M800V, M800V Series	M800VW Series/M800VS Series
M80V, M80V Series	M80VW Series/M80V Series
M800V/M80V, M800V/M80V Series	M800VW Series/M800VS Series/M80VW Series/M80V Series
M8V, M8V Series	

To safely use this CNC unit, thoroughly study the "Precautions for Safety" before use.
Be sure to keep this manual always at hand.
Also refer to the manuals on "Manual List" as necessary.

■Notes on reading this manual

(1) The unit names, cable names and various specifications are subject to change without notice. Please confirm these before placing an order.

(2) The screens described in this manual are the screens for Mitsubishi Electric's display unit.
If the display unit you are using is not manufactured by Mitsubishi Electric, please contact the machine tool builder.

■Details described in this manual

In this manual, the following abbreviations might be used.
L system: Lathe system
M system: Machining center system
MTB: Machine tool builder

Manual List

Manuals related to M800V/M80V Series are listed as follows.
These manuals are written on the assumption that all optional functions are added to the targeted model.
Some functions or screens may not be available depending on the machine or specifications set by MTB. (Confirm the specifications before use.)
The manuals issued by MTB take precedence over these manuals.

Manual	IB No.	Purpose and Contents
M800V/M80V Series Instruction Manual	IB-1501618	• Operation guide for NC • Explanation for screen operation, etc.
M800V/M80V Series Programming Manual (Lathe System) (1/2)	IB-1501619	• G code programming for lathe system • Basic functions, etc.
M800V/M80V Series Programming Manual (Lathe System) (2/2)	IB-1501620	• G code programming for lathe system • Functions for multi-part system, high-accuracy function, etc.
M800V/M80V Series Programming Manual (Machining Center System) (1/2)	IB-1501621	• G code programming for machining center system • Basic functions, etc.
M800V/M80V Series Programming Manual (Machining Center System) (2/2)	IB-1501622	• G code programming for machining center system • Functions for multi-part system, high-accuracy function, etc.
M800V/M80V Series Alarm/Parameter Manual	IB-1501623	• Alarms • Parameters

Manuals for MTBs (NC)

Manual	IB No.	Purpose and Contents
M800V/M80V Series Specifications Manual (Function)	IB-1501610	• Model selection • Outline of various functions
M800V/M80V Series Specifications Manual (Hardware)	IB-1501611	• Model selection • Specifications of hardware unit
M800VW/M80VW Series Connection and Setup Manual	IB-1501612	• Detailed specifications of hardware unit • Installation, connection, wiring, setup (startup/adjustment)
M800VS/M80V Series Connection and Setup Manual	IB-1501613	• Detailed specifications of hardware unit • Installation, connection, wiring, setup (startup/adjustment)
M800V/M80V Series PLC Development Manual	IB-1501614	• Electrical design • I/O relation (assignment, setting, connection), field network • Development environment (PLC on-board, peripheral development environment), etc.
M800V/M80V Series PLC Programming Manual (1/2)	IB-1501667	• Electrical design • Sequence programming • Explanation for instructions, functions, and parameters
M800V/M80V Series PLC Programming Manual (2/2)	IB-1501668	• Electrical design • Sequence programming • Usage examples of instructions
M800V/M80V Series PLC Interface Manual	IB-1501616	• Electrical design • Interface signals between NC and PLC
M800V/M80V Series Maintenance Manual	IB-1501617	• Cleaning and replacement for each unit • Other items related to maintenance

Manuals for MTBs (drive section)

Manual	IB No.	Contents
MDS-E/EH Series Specifications Manual	IB-1501226	• Specifications for power supply regeneration type
MDS-E/EH Series Instruction Manual	IB-1501229	• Instruction for power supply regeneration type
MDS-EJ/EJH Series Specifications Manual	IB-1501232	• Specifications for regenerative resistor type
MDS-EJ/EJH Series Instruction Manual	IB-1501235	• Instruction for regenerative resistor type
MDS-EM/EMH Series Specifications Manual	IB-1501238	• Specifications for multi-hybrid, power supply regeneration type
MDS-EM/EMH Series Instruction Manual	IB-1501241	• Instruction for multi-hybrid, power supply regeneration type
DATA BOOK	IB-1501252	• Specifications of servo drive unit, spindle drive unit, motor, etc.
MDS-EX-CVP Series Specifications and Instruction Manual	IB-1501587	• Specifications and instruction for the power supply unit with large capacity

Manuals for MTBs (Others)

Manual	No.	Purpose and Contents
GOT2000 Series User's Manual (Hardware)	SH-081194ENG	• Outline of hardware such as part names, external dimensions, installation, wiring, maintenance, etc. of GOTs
GOT2000 Series User's Manual (Utility)	SH-081195ENG	• Outline of utilities such as screen display setting, operation method, etc. of GOTs
GOT2000 Series User's Manual (Monitor)	SH-081196ENG	• Outline of each monitor function of GOTs
GOT2000 Series Connection Manual (Mitsubishi Electric Products)	SH-081197ENG	• Outline of connection types and connection method between GOT and Mitsubishi Electric connection devices
GT Designer3 (GOT2000) Screen Design Manual	SH-081220ENG	• Outline of screen design method using screen creation software GT Designer3
GOT2000/GOT1000 Series CC-Link Communication Unit User's Manual	IB-0800351	• Explanation for handling CC-Link communication unit (for GOT2000 series/GOT1000 series)
GX Developer Version 8 Operating Manual (Startup)	SH-080372E	• Explanation for system configuration, installation, etc. of PLC development tool GX Developer
GX Developer Version 8 Operating Manual	SH-080373E	• Explanation for operations using PLC development tool GX Developer
GX Converter Version 1 Operating Manual	IB-0800004	• Explanation for operations using data conversion tool GX Converter
GX Works2 Installation Instructions	BCN-P5999-0944	• Explanation for the operating environment and installation method of GX Works2
GX Works2 Version 1 Operating Manual (Common)	SH-080779ENG	• Explanation for the system configuration of GX Works2 and the functions common to Simple project and Structured project such as parameter setting, operation method for the online function
GX Works2 Version 1 Operating Manual (Simple Project)	SH-080780ENG	• Explanation for methods for such as creating and monitoring programs in Simple project of GX Works2
MELSEC-Q/L/F Structured Programming Manual (Fundamentals)	SH-080782ENG	• Explanation for programming methods, types of programming languages, etc. required to create structured programs
MELSEC-Q/L Structured Programming Manual (Application Functions)	SH-080784ENG	• Explanation for specifications and functions related to application functions which can be used in structured programs
GX Works2 Version 1 Operating Manual (Simple Project, Function Block)	SH-080984ENG	• Explanation for methods for such as creating function blocks, pasting function blocks to sequence programs, and operating FB library in Simple project of GX Works2
GX Works2 Version 1 Operating Manual (Structured Project)	SH-080781ENG	• Explanation for methods for such as creating and monitoring programs in Structured project of GX Works2
GX Works3 Installation Instructions	BCN-P5999-0391	• Explanation for the operating environment and installation method of GX Works3
MELSEC-Q CC-Link System Master/ Local Module User's Manual	SH-080394E	• Explanation for system configuration, installation, wiring, etc. of master/local modules for CC-Link system
GOT2000 Series Connection Manual (Non-Mitsubishi Electric Products 1)	SH-081198ENG	• Explanation for connection types and connection method between GOT and other company's devices
GOT2000 Series Connection Manual (Non-Mitsubishi Electric Products 2)	SH-081199ENG	
GOT2000 Series Connection Manual (Microcomputers, MODBUS/Fieldbus Products, Peripherals)	SH-081200ENG	• Explanation for connection types and connection method between GOT and microcomputers, MODBUS/fieldbus products, peripherals
GT SoftGOT2000 Version1 Operating Manual	SH-081201ENG	• Explanation for system configuration, screen configuration and operation method of monitoring software GT SoftGOT2000
MELSEC iQ-R Programming Manual (CPU Module Instructions, Standard Functions/Function Blocks)	SH-081266ENG	• Explanation for instructions, general-purpose functions, and general-purpose function blocks required for programming the sequencer MELSEC iQ-R series

Reference Manual for MTBs

Manual	No.	Purpose and Contents
M800/M80 Series Smart safety observation Specification manual	BNP-C3072-022	♦ Explanation for smart safety observation function
M800/M80 Series CC-Link (Master/ Local) Specification manual	BNP-C3072-089	♦ Explanation for CC-Link
M800/M80 Series PROFIBUS-DP Specification manual	BNP-C3072-118	♦ Explanation for PROFIBUS-DP communication function
M800/M80 Series Interactive cycle insertion (Customization) Specification manual	BNP-C3072-121-0003	♦ Explanation for interactive cycle insertion
M800/M80 Series EtherNet/IP Specifications manual	BNP-C3072-263	♦ Explanation for EtherNet/IP
M800/M80 Series CC-Link IE Field (Master/local) Specifications manual	BNP-C3072-283	♦ Explanation for CC-Link IE Field
M800/M80 Series GOT Connection Specifications manual	BNP-C3072-314	♦ Explanation for GOT connection
M800/M80 Series CC-Link IE Field Basic Specifications manual	BNP-C3072-337	♦ Explanation for CC-Link IE Field Basic
M800/M80 Series FL-net Specifications manual	BNP-C3072-368	♦ Explanation for FL-net
M800/M80 Series Synchronous Control Specifications manual	BNP-C3072-074	♦ Explanation for synchronous control
M800/M80 Series Multiple-Axis Synchronization Control Specifications manual	BNP-C3072-339	♦ Explanation for multiple-axis synchronization control

Precautions for Safety

Always read the specifications issued by the MTB, this manual, related manuals and attached documents before installation, operation, programming, maintenance or inspection to ensure correct use. Understand this numerical controller, safety items and cautions before using the unit.
This manual ranks the safety precautions into "DANGER", "WARNING" and "CAUTION".

⚠ DANGER

When the user may be subject to imminent fatalities or major injuries if handling is mistaken.

⚠ WARNING

When the user may be subject to fatalities or major injuries if handling is mistaken.

⚠ CAUTION

When the user may be subject to bodily injury or when physical damage may occur if handling is mistaken.

Note that even items ranked as "⚠ CAUTION", may lead to major results depending on the situation. In any case, important information that must always be observed is described.

The following signs indicate prohibition and compulsory.

⃠	**This sign indicates prohibited behavior (must not do).** **For example, "Keep fire away" is indicated by ⃠.**
●	**This sign indicates a thing that is critical (must do).** **For example, "it must be grounded" is indicated by ⏚.**

The meaning of each pictorial sign is as follows.

CAUTION	**CAUTION rotate object**	**CAUTION HOT**	**Danger Electric shock risk**	**Danger explosive**
Prohibited	**Disassembly is prohibited**	**KEEP FIRE AWAY**	**General instruction**	**Earth ground**

For Safe Use

Mitsubishi Electric CNC is designed and manufactured solely for applications to machine tools to be used for industrial purposes.
Do not use this product in any applications other than those specified above, especially those which are substantially influential on the public interest or which are expected to have significant influence on human lives or properties.

1. Items related to prevention of electric shocks

⚠ WARNING

⚠ **Do not open or remove the front cover while the power is ON or during operation. The high voltage terminals and charged sections are exposed, and this could result in electric shocks.**

⚠ **Do not remove the front cover even when the power is OFF, except for the wiring works or periodic inspections. The inside of the controller and drive unit are charged, and this could result in electric shocks.**

⚠ **Always wait at least 15 minutes after turning the power OFF. Then, check the voltage with a tester, etc., before wiring works, inspections or connecting with peripheral devices. Failure to observe this could result in electric shocks.**

⚠ **Earth ground the controller, drive unit and motor according to the local laws. (In Japan, ground the 200V Series input products with Class C or higher protective grounding and the 400V Series input with Class D or higher protective grounding.)**

⚠ **All wiring works, maintenance and inspections must be carried out by a qualified technician. Failure to observe this could result in electric shocks. Contact your nearby Service Center for replacing parts and servicing.**

⚠ **Wire the controller, drive unit and motor after installation. Failure to observe this could result in electric shocks.**

⚠ **Do not operate the switches with wet hands. Failure to observe this could result in electric shocks.**

⚠ **Do not damage, apply excessive stress, place heavy things on or sandwich the cables. Failure to observe this could result in electric shocks.**

⚠ **Insulate the power lead using a fixed terminal block. Failure to observe this could result in electric shocks.**

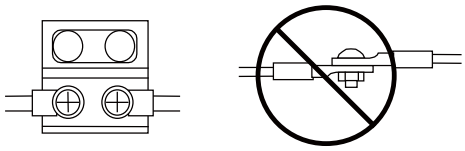

⚠ **Before starting maintenance or inspections, turn the main circuit power and control power both OFF. Wait at least fifteen minutes until the CHARGE lamp turns OFF, and then confirm that the input and output voltage are zero using a tester, etc. Failure to observe this could lead to electric shocks.**

2. Items related to prevention of fire

⚠ CAUTION

⚠ **Install the controller, drive unit, motor and regenerative resistor on non-combustible material. Installation directly on or near combustible materials could result in fires.**

⚠ **If any malfunction in the unit is observed, shut off the power at the unit's power supply side. Continuous flow of large current could result in fires.**

⚠ **Install an appropriate no fuse breaker (NFB) and contactor (MC) on the power input section of the drive unit and configure the sequence that shuts the power off upon drive unit's emergency stop or alarm.**

⚠ **When a breaker is shared for multiple power supply units, the breaker may not function upon short-circuit failure in a small capacity unit. Do not share a breaker for multiple units as this is dangerous.**

⚠ **Incorrect wiring and connections could cause the devices to damage or burn.**

3. Items related to prevention of bodily injury or property damage

⚠ DANGER

When transporting or installing a built-in IPM spindle or linear servomotor, be careful so that your hand or property is not trapped in the motors or other metal objects. Also keep the devices with low magnetic tolerance away from the product.

⚠ CAUTION

Do not apply voltages to the connectors or terminals other than voltages indicated in the connection and setup manual for the controller or specifications manual for the drive unit. Failure to observe this could cause bursting, damage, etc.

Incorrect connections could cause the devices to rupture or damage, etc. Always connect the cables to the indicated connectors or terminals.

Incorrect polarity (+ -) could cause the devices to rupture or damage, etc.

Persons wearing medical devices, such as pacemakers, must stay away from this unit. The electromagnetic waves could adversely affect the medical devices.

Fins on the rear of the unit, regenerative resistor and motor, etc., may be hot during operation and for a while after the power has been turned OFF. Do not touch or place the parts and cables, etc. close to these sections. Failure to observe this could result in burns.

Do not enter the machine's movable range during automatic operation. Keep your hands, feet or face away from the spindle during rotation.

4. Other items

Always follow the precautions below as well. Incorrect handling could result in faults, injuries or electric shocks, etc.

(1) Product and manual

⚠ CAUTION

For items described as "Restrictions" or "Usable State" in this manual, the instruction manual issued by the machine tool builder (MTB) takes precedence over this manual.

Items not described in this manual must be interpreted as "not possible"

This manual is written on the assumption that all the applicable functions are included. Some of them, however, may not be available for your NC system. Refer to the specifications issued by the machine tool builder before use.

Refer to the manuals issued by the machine manufacturer for each machine tool explanation.

Some screens and functions may differ depending on the NC system (or its version), and some functions may not be possible. Please confirm the specifications before use.

To protect the availability, integrity and confidentiality of the NC system against cyber-attacks including unauthorized access, denial-of-service (DoS) (*1) attack, and computer virus from external sources via a network, take security measures such as firewall, VPN, and anti-virus software.
(*1) Denial-of-service (DoS) refers to a type of cyber-attack that disrupts services by overloading the system or by exploiting a vulnerability of the system.

Mitsubishi Electric assumes no responsibility for any problems caused to the NC system by any type of cyber-attacks including DoS attack, unauthorized access and computer virus.

(2) Transportation and installation

⚠ CAUTION

⚠ **Correctly transport the products according to the mass.**

⃠ **Use motor's suspension bolts to transport the motor itself. Do not use it to transport the motor after installation onto the machine.**

⚠ **Do not stack the products exceeding the indicated limit.**

⚠ **Do not hold the cables, shaft or encoder when transporting the motor.**

⚠ **Do not transport the controller or drive unit by suspending or holding the connected wires or cables.**

⚠ **Do not hold the front cover when transporting the unit, or the front cover could come off, causing the unit to drop.**

⚠ **Install on a non-combustible place where the unit's or motor's mass can be withstood according to the instruction manual.**

⚠ **The motor does not have a complete water-proof (oil-proof) structure. Do not allow oil or water to contact or enter the motor. Prevent the cutting chips from being accumulated on the motor as they easily soak up oil.**

⚠ **When installing the motor facing upwards, take measures on the machine side so that gear oil, etc., will not enter the motor shaft.**

⚠ **Do not remove the encoder from the motor. (The encoder installation screw is treated with sealing.)**

⚠ **Do not allow foreign matters, especially, conductive foreign matters such as screws or metal chips, or combustible foreign matters such as oil, to enter the controller, drive unit or motor. Failure to observe this could result in rupture or damage.**

⚠ **Do not get on the product or place heavy objects on it.**

⚠ **Provide prescribed distance between the controller/drive unit and inner surface of the control panel/other devices.**

⚠ **Do not install or operate the controller, drive unit or motor that is damaged or has missing parts.**

⚠ **Take care not to cut hands, etc. with the heat radiating fins or metal edges.**

⚠ **Do not block the intake/outtake ports of the motor with the cooling fan.**

⚠ **Install the controller's display section and operation board section on the spot where cutting oil will not reach.**

⚠ **The controller, drive unit and motor are precision devices, so do not drop or apply thumping vibration and strong impacts on them.**

⚠ **Store and use the units according to the environment conditions indicated in each specifications manual.**

⚠ **When disinfectants or insecticides must be used to treat wood packaging materials, always use methods other than fumigation (for example, apply heat treatment at the minimum wood core temperature of 56 °C for a minimum duration of 30 minutes (ISPM No. 15 (2009))).**

If products such as units are directly fumigated or packed with fumigated wooden materials, halogen substances (including fluorine, chlorine, bromine and iodine) contained in fumes may contribute to the erosion of the capacitors. When exporting the products, make sure to comply with the laws and regulations of each country.

⚠ **Do not use the products in conjunction with any components that contain halogenated flame retardants (bromine, etc). Failure to observe this may cause the erosion of the capacitors.**

⚠ **Securely fix the motor to the machine. The motor could come off during operation if insecurely fixed.**

⚠ **Always install the motor with reduction gear in the designated direction. Failure to observe this could result in oil leaks.**

⚠ **Always install a cover, etc., over the shaft so that the rotary section of the motor cannot be touched during motor rotation.**

⚠ CAUTION

⚠ When installing a coupling to the servomotor shaft end, do not apply impacts by hammering, etc. The encoder could be damaged.

⚠ Use a flexible coupling when connecting with a ball screw, etc., and keep the shaft core deviation smaller than the tolerable radial load of the shaft.

⚠ Do not use a rigid coupling as an excessive bending load may be applied on the shaft and could cause the shaft to break.

⚠ Do not apply a load exceeding the tolerable level onto the motor shaft. The shaft or bearing could be damaged.

❗ Before using this product after a long period of storage, please contact the Service Center.

⚠ Following the UN recommendations, battery units and batteries should be transported based on the international regulations such as those determined by International Civil Aviation Organization (ICAO), International Air Transport Association (IATA), International Maritime Organization (IMO) and U.S. Department of Transportation (DOT).

⚠ Install the unit in a place which can withstand its weight.

(3) Items related to wiring

⚠ CAUTION

⚠ Correctly wire this product. Failure to observe this could result in motor runaway, etc.

⚠ Do not install a phase advancing capacitor, surge absorber or radio noise filter on the output side of the drive unit.

⚠ Correctly connect the output side (terminal U, V, W). The motor will not run properly if incorrectly connected.

⚠ Always install an AC reactor per each power supply unit.

⚠ Always install an appropriate breaker per each power supply unit. A breaker cannot be shared for multiple power supply units.

⚠ Do not directly connect a commercial power supply to the motor. Failure to observe this could result in faults.

❗ When using an inductive load such as relays, always connect a diode in parallel to the load as a noise countermeasure.

❗ When using a capacitive load such as a lamp, always connect a protective resistor serially to the load to suppress rush currents.

⚠ Do not mistake the direction of the surge absorption diode to be installed on the DC relay for the control output signal. If mistaken, the signal will not be output due to fault in the drive unit, and consequently the protective circuit, such as emergency stop, could be disabled.

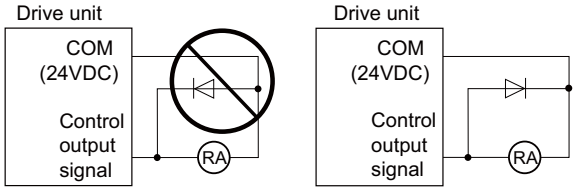

🚫 Do not connect or disconnect the connection cables between each unit while the power is ON.

⚠ Do not connect or disconnect the PCBs while the power is ON.

⚠ Do not pull the cables when connecting/disconnecting them.

⚠ Securely tighten the cable connector fixing screw or fixing mechanism. The motor could come off during operation if insecurely fixed.

⏚ Always treat the shield cables indicated in the Connection Manual with grounding measures such as cable clamps.

⚠ CAUTION

⚠ **Separate the signal wire from the drive line or power line when wiring.**

⚠ **Use wires and cables whose wire diameter, heat resistance level and bending capacity are compatible with the system.**

Ground the device according to the requirements of the country where the device is to be used.

⚠ **Wire the heat radiating fins and wires so that they do not contact.**

⚠ **When using the RS-232C device as a peripheral device, caution must be paid for connector connection/disconnection. Always use a double-OFF type AC power supply switch on the device side, and connect/disconnect the connector with the AC power supply on the device side OFF.**

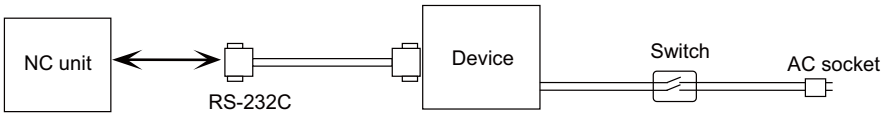

⚠ **Using a stabilized power supply without overcurrent protection may cause the unit's failure due to miswiring of 24V.**

⚠ **12V, 5V, and 3.3V output from connectors are to supply the power for dedicated peripheral devices. Do not use for other equipment to supply the power since we do not guarantee the NC operation by voltage down or noise sneaking.**

When using an inductive load such as a relay, always connect a diode in parallel to the load to prevent a counter-electromotive force.

When the rush current exceeds the maximum output current, always connect a protective resistor serially to the load to suppress rush currents.

⚠ **The wires from the surge absorber should be connected without extensions.**

(4) Set up

⚠ WARNING

Do not cancel the emergency stop before confirming the basic operation.

Always set the stored stroke limit. Failure to set this could result in collision with the machine end.

⚠ CAUTION

If the battery low warning is issued, save the machining programs, tool data and parameters in an input/output device, and then replace the battery. When the battery alarm is issued, the machining programs, tool data and parameters may be destroyed. Reload the data after replacing the battery.

Do not adjust the spindle when possible risks associated with adjustment procedures are not thoroughly taken into consideration.

Be careful when touching spindle's rotating section, or your hand may be caught in or cut.

(5) Adjustments

⚠ CAUTION

⚠ **Check and adjust programs and each parameter before starting operation. Failure to observe this could result in unpredictable operations depending on the machine.**

⚠ **Do not make drastic adjustments or changes as the operation could become unstable.**

(6) Usage

⚠ CAUTION

Install an external emergency stop circuit so that the operation can be stopped and the power turns OFF immediately when unforeseen situation occurs. A contactor, etc., is required in addition to the shutoff function mounted in the controller.

Turn OFF the power immediately if any smoke, abnormal noise or odor is generated from the controller, drive unit or motor.

Only a qualified technician may disassemble or repair this product.

Do not alter.

Use a noise filter, etc. to reduce the effect of electromagnetic disturbances in the case where electromagnetic disturbances could adversely affect the electronic devices used near the drive unit.

Use the drive unit, motor and each regenerative resistor with the designated combination. Failure to observe this could result in fires or faults.

The combination of the motor and drive unit that can be used is determined. Be sure to check the models of motor and drive unit before test operation.

The brakes (electromagnetic brakes) mounted in the servomotor are used for the purpose of holding, and must not be used for normal braking. Also, do not run the motor with the motor brake applied. Motor brake is used for the purpose of holding.

For the system running via a timing belt, install a brake on the machine side so that safety can be ensured.

Be sure to confirm SERVO OFF (or READY OFF) when applying the electromagnetic brake. Also, be sure to confirm SERVO ON prior to releasing the brake.

When using the DC OFF type electromagnetic brake, be sure to install a surge absorber on the brake terminal.

Do not connect or disconnect the cannon plug while the electromagnetic brake's power is ON. The cannon plug pins could be damaged by sparks.

After changing programs/parameters, or after maintenance/inspection, always carry out a test operation before starting actual operation.

Use the power that are complied with the power specification conditions (input voltage, input frequency, tolerable time for instantaneous power interruption) indicated in each specifications manual.

When making encoder cables, do not mistake connection. Failure to observe this could result in malfunction, runaway or fire.

Surge absorber to be selected varies depending on input power voltage.

Always keep the touchscreen surface clean. When it gets dirty, remove the dirt immediately. Do not perform any operation on the dirty touchscreen.

Pay close attention to the sequence operation when carrying out forced data setting (forced output) in the I/F diagnosis screen during machine operation.

(7) Troubleshooting

⚠ CAUTION

⚠ Use a motor with electromagnetic brakes or establish an external brake mechanism for the purpose of holding; this serves as counter-measures for possible hazardous situation caused by power failure or product fault.

⚠ Use a double circuit structure for the electro-magnetic brake's operation circuit so that the brakes will activate even when the external emergency stop signal is issued.

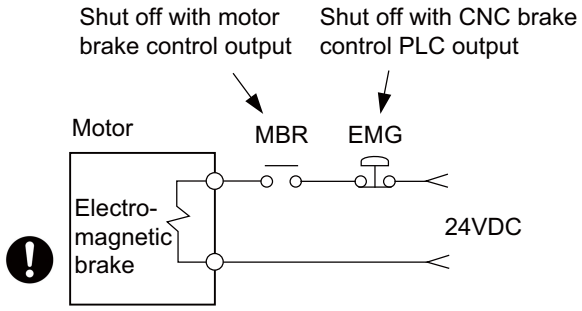

⚠ The machine could suddenly restart when the power is restored after an instantaneous power failure, so stay away from the machine. (Design the machine so that the operator safety can be ensured even if the machine restarts.)

⚠ To secure the absolute position, do not shut off the servo drive unit's control power supply when its battery voltage drops (warning 9F) in the servo drive unit side.

❗ If the battery voltage drop warning alarm occurs in the controller side, make sure to back up the machining programs, tool data and parameters, etc. with the input/output device before replacing the battery. Depending on the level of voltage drop, memory loss could have happened. In that case, reload all the data backed up before the alarm occurrence.

(8) Maintenance, inspection and part replacement

⚠ CAUTION

⚠ Periodically back up the programs, tool data and parameters to avoid potential data loss. Also, back up those data before maintenance and inspections.

❗ When replacing the battery on the controller side, the machining programs, tool data and parameters should be backed up with the input/output device beforehand. In case the memory is damaged in replacing the batteries, reload all the data backed up before replacing the battery.

⚠ The electrolytic capacitor's capacity will drop due to deterioration. To prevent secondary damage due to capacitor's faults, Mitsubishi recommends the electrolytic capacitor to be replaced approx. every five years even when used in a normal environment. Contact the Service Center for replacements.

⚠ Never perform a megger test (measure the insulation resistance) of the drive unit. Failure to observe this could lead to faults.

⚠ Do not replace parts or devices while the power is ON.

⚠ Do not short-circuit, charge, overheat, incinerate or disassemble the battery.

⚠ There may be a unit filled with substitute Freon in the heat radiating fins of the 37kW or smaller unit. Be careful not to break the heat radiating fins during maintenance or replacement.

⚠ Connect the encoder (CN2/CN3) immediately after the installation of the servo drive unit. In addition, when a battery box is used, immediately connect to the BTA/BTB connector. (prevention of absolute position data lost)

⚠ Replace the batteries with new ones immediately after the battery voltage drop alarm (9F) has been output.

⚠ Replace the batteries while applying the drive unit's control power.

⚠ Replace the batteries with new ones that are in their recommended use period.

⚠ Wrong connection may cause liquid leakage, heat generation and/or explosion.

⚠ Do not mix new batteries with used ones or mix different types of batteries.

(9) Disposal

⚠ CAUTION

⚠ **Take the batteries and backlights for LCD, etc., off from the controller, drive unit and motor, and dispose of them as general industrial wastes.**

Do not alter or disassemble controller, drive unit, or motor.

⚠ **Collect and dispose of the spent batteries and the backlights for LCD according to the local laws.**

⚠ **Dispose the spent cooling fan according to local laws.**

(10) General precautions

To explain the details, drawings given in the instruction manual, etc., may show the unit with the cover or safety partition removed. When operating the product, always place the cover or partitions back to their original position, and operate as indicated in the instruction manual, etc.

Treatment of waste

The following two laws will apply when disposing of this product. Considerations must be made to each law. The following laws are in effect in Japan. Thus, when using this product overseas, the local laws will have a priority. If necessary, indicate or notify these laws to the final user of the product.

(1) Requirements for "Law for Promotion of Effective Utilization of Resources"
   (a) Recycle as much of this product as possible when finished with use.
   (b) When recycling, often parts are sorted into steel scraps and electric parts, etc., and sold to scrap contractors. Mitsubishi Electric recommends sorting the product and selling the members to appropriate contractors.

(2) Requirements for "Law for Treatment of Waste and Cleaning"
   (a) Mitsubishi Electric recommends recycling and selling the product when no longer needed according to item (1) above. The user should make an effort to reduce waste in this manner.
   (b) When disposing a product that cannot be resold, it shall be treated as a waste product.
   (c) The treatment of industrial waste must be commissioned to a licensed industrial waste treatment contractor, and appropriate measures, including a manifest control, must be taken.
   (d) Batteries correspond to "primary batteries", and must be disposed of according to local disposal laws.

Disposal

(Note) This symbol mark is for EU countries only.
This symbol mark is according to the directive 2006/66/EC Article 20 Information for end-users and Annex II.

Your MITSUBISHI ELECTRIC product is designed and manufactured with high quality materials and components which can be recycled and/or reused.
This symbol means that batteries and accumulators, at their end-of-life, should be disposed of separately from your household waste.
If a chemical symbol is printed beneath the symbol shown above, this chemical symbol means that the battery or accumulator contains a heavy metal at a certain concentration. This will be indicated as follows:
Hg: mercury (0,0005%), Cd: cadmium (0,002%), Pb: lead (0,004%)
In the European Union there are separate collection systems for used batteries and accumulators.
Please, dispose of batteries and accumulators correctly at your local community waste collection/recycling centre.

Please, help us to conserve the environment we live in!

Trademarks

MELDAS, MELSEC, EZSocket, EZMotion, iQ Platform, MELSEC iQ-R, MELSOFT, GOT, CC-Link, CC-Link/LT, CC-Link IE, CC-Link IE/field, EcoMonitorLight and SLMP are either trademarks or registered trademarks of Mitsubishi Electric Corporation in Japan and/or other countries.

Ethernet is a registered trademark of Xerox Corporation in the United States and/or other countries.
Microsoft®, Windows®, SQL Server® and Access® are either trademarks or registered trademarks of Microsoft Corporation in the United States and/or other countries.
SD logo and SDHC logo are either registered trademarks or trademarks of LLC.
UNIX is a registered trademark of The Open Group in the United States and/or other countries.
Intel® and Pentium® are either trademarks or registered trademarks of Intel Corporation in the United States and/or other countries.
MODBUS® is either a trademark or a registered trademark of Schneider Electric USA, Inc. or the affiliated companies in Japan and/or other countries.
EtherNet/IP is a trademark of Open DeviceNet Vendor Association,Inc.
PROFIBUS-DP is either a trademark or a registered trademark of PROFIBUS User Organization.
Oracle® is a registered trademark of Oracle Corporation, the subsidiaries, or the affiliated companies in the United States and /or other countries.
VNC is a registered trademark of RealVNC Ltd. in the United States and other countries.
QR Code is a registered trademark of DENSO WAVE INCORPORATED.
McAfee is a registered trademark or a trademark of McAfee, LLC or its subsidiaries in the United States and other countries.
Punchtap is licensed by EMUGE.
The term HDMI and the HDMI Logo are trademarks or registered trademarks of HDMI Licensing Administrator, Inc. in the United States and other countries.
Wi-Fi is either a trademark or a registered trademark of Wi-Fi Alliance.
BiSS is a registered trademark of iC-Haus GmbH.

Other company and product names that appear in this manual are trademarks or registered trademarks of the respective companies.

本製品の取扱いについて

(日本語 /Japanese)
本製品は工業用 (クラス A) 電磁環境適合機器です。販売者あるいは使用者はこの点に注意し、住商業環境以外での使用をお願いいたします。

Handling of our product

(English)
This is a class A product. In a domestic environment this product may cause radio interference in which case the user may be required to take adequate measures.

본 제품의 취급에 대해서

(한국어 /Korean)
이 기기는 업무용 (A 급) 전자파적합기기로서 판매자 또는 사용자는 이 점을 주의하시기 바라며 가정외의 지역에 서 사용하는 것을 목적으로 합니다 .

Contents

1 System Basic Configuration 1
1.1 System Basic Configuration Drawing 2
1.2 General Connection Diagram 4
1.2.1 M800VW Series, Windows-based Display Unit 5
1.2.2 M80VW Series, Windows-based Display Unit 6
1.2.3 M800VS Series 7
1.2.4 M80V Series 8
1.2.5 19-type Display Unit (M800VW/M80VW Series, Windows-based Display Unit) 9
1.2.6 19-type Display Unit (M800VS/M80V Series) 10
1.2.7 Connecting an Operation Panel I/O Unit (FCU8-DX834) (M800VS/M80V Series) 11
1.2.8 Connecting a Pulse-controlled Inverter (M80V Series) 12
1.2.9 Connecting an Image Input Expansion Unit (M800VS/M80V Series) 13
1.2.10 Connecting a Laser I/F Unit 14
1.2.11 Connecting a BiSS Encoder (M800VS/M80V Series) 15
1.3 How to Check the System Configuration 16
1.3.1 System Configuration Screen 16
1.3.2 Option Display Screen 19
1.4 Each Unit Status Display 20
1.4.1 Control Unit 20
1.4.2 Personal Computer Unit 24
1.4.3 Operation Panel I/O Unit 25
1.4.4 Remote I/O Unit 28
1.4.5 Laser I/F Unit 30
1.4.6 Function Expansion Unit 31
1.4.6.1 CC-Link Expansion Unit 31
1.4.6.2 PROFIBUS-DP Expansion Unit 32
1.4.6.3 CC-Link IE Field 33
1.4.6.4 EtherNet/IP 34
1.4.6.5 FL-net 35
1.4.7 7-segment LEDs on the Control Unit 36
1.4.7.1 Normal State Display 36
1.4.7.2 Error Display at NC Startup 36
1.4.7.3 Display when an Alarm Occurs 37

2 Daily Maintenance and Periodic Maintenance 47
2.1 Daily Maintenance 49
2.1.1 Touchscreen 49
2.1.2 Escutcheon 49
2.2 Periodic Maintenance 50
2.2.1 List of Durable Parts 50
2.2.2 List of Replacing Parts 50
2.2.3 Durable Parts Replacement 51
2.2.3.1 Control Unit Battery 51
2.2.3.2 Personal Computer Unit Battery [M800VW/M80VW] 53
2.2.3.3 Personal Computer Unit Cooling Fan [M800VW/M80VW] 54
2.2.4 Replacing Fuse 55

3 Maintenance of the Drive Unit 59
3.1 Periodic Inspections 60
3.2 Durable Parts 61
3.3 Adding and Replacing Units and Parts 62
3.3.1 MDS-E/EH Series 62
3.3.1.1 Replacing the Drive Unit 62
3.3.1.2 Replacing the Unit Fan 63
3.3.1.3 Replacing the Battery 65
3.3.2 MDS-EJ/EJH Series 68
3.3.2.1 Replacing the Drive Unit 68
3.3.2.2 Replacing the Unit Fan 68
3.3.2.3 Replacing the Battery 74
3.3.3 MDS-EM/EMH Series 77
3.3.3.1 Replacing the Drive Unit 77
3.3.3.2 Replacing the Fan Unit 78
3.3.3.3 Replacing the Battery 79

4 Failure Diagnosis 83
4.1 Introduction 84
4.2 Failure Diagnosis Procedure 84
4.3 Diagnosis Based on the Alarm 85
4.3.1 How To Check the Alarm Information 85
4.3.2 Alarm History 87
4.3.3 Alarm Message Details 89
4.4 Diagnosis Based on the I/F Diagnosis Screen 90
4.4.1 I/F Diagnosis Screen 90
4.4.1.1 Displaying the PLC Device Data 92
4.4.1.2 Carrying Out Modal Output 93
4.4.1.3 Carrying Out One-shot Output 94
4.4.2 List of Devices for PLC Uses 95
4.5 Diagnosis Based on the Self Diagnosis Screen 96
4.5.1 Self Diagnosis Screen 96
4.6 Diagnosis Based on the Data Sampling Screen 101
4.7 Diagnosis Based on the Drive Monitor Screen 102
4.7.1 Drive Monitor Screen (Servo Unit) 102
4.7.2 Drive Monitor Screen (Spindle Unit) 107
4.7.3 Drive Monitor Screen (Power Supply Unit) 112
4.7.4 Drive Monitor Screen (Synchronous Error) 114
4.7.5 Clearing the Alarm History on Drive Monitor Screen 115
4.8 NC Memory Diagnosis Screen 116
4.9 Safety Observation Screen 118
4.9.1 Safety Observation Screen (Configuration Diagnosis) 118
4.9.2 Safety Observation Screen (Signal Monitor) 120
4.9.3 Safety Observation Screen (Drive Monitor) 122
4.9.4 Safety Observation Screen (Version Display) 125
4.10 Servo Diagnosis Screen 126
4.11 Diagnosis Data Collection Setting 129
4.11.1 Starting the Data Collection 131
4.11.2 Stopping the Data Collection 132
4.11.3 Clearing the Collected Data 132
4.11.4 Referring to the Collected Data 133
4.11.5 Display Delay Function for Communication Errors and Servo/Spindle Alarms 136
4.12 Application Error Detection 137
4.13 IP Address Resetting Procedure at Disabled Network Communication [M800VW/M80VW Series Only] 138
4.13.1 Connectable Control Unit IP Address List Screen 138
4.13.2 Resetting Procedure 139
4.13.3 Message 140
4.14 Field Network Diagnostics Function 141
4.14.1 Diagnosis Procedure 142
4.14.1.1 Statistical Information of Packet Transmission and Reception 142
4.14.1.2 Protocol-Specific Information 144
4.14.2 Diagnosis Command 146
4.14.2.1 Clearing Statistical Information of Packet Transmission and Reception 146
4.14.2.2 Error Code List 147

5 Troubleshooting 149
5.1 Troubleshooting 150
5.1.1 Possible Causes of Trouble 151

6 Replacing Each Unit 153
6.1 Data Backup and Restoration 154
6.1.1 All Backup 155
6.1.2 All Restoration 157
6.2 Control Unit 159
6.3 Display Unit 161
6.4 Personal Computer Unit 167
6.5 Keyboard Unit 168
6.6 Operation Panel I/O Unit 176
6.7 Remote I/O Unit 180
6.8 Laser I/F Unit 182
6.9 Function Expansion Unit 183
6.10 Functional Safety Expansion Unit [M80V] 186
6.11 Built-in Disk of the Display Unit 187

6.12 SD Card 188
6.13 USB memory 189
6.14 Machine Operation Panel 190

1

System Basic Configuration

1.1 System Basic Configuration Drawing

■For M800VW/M80VW

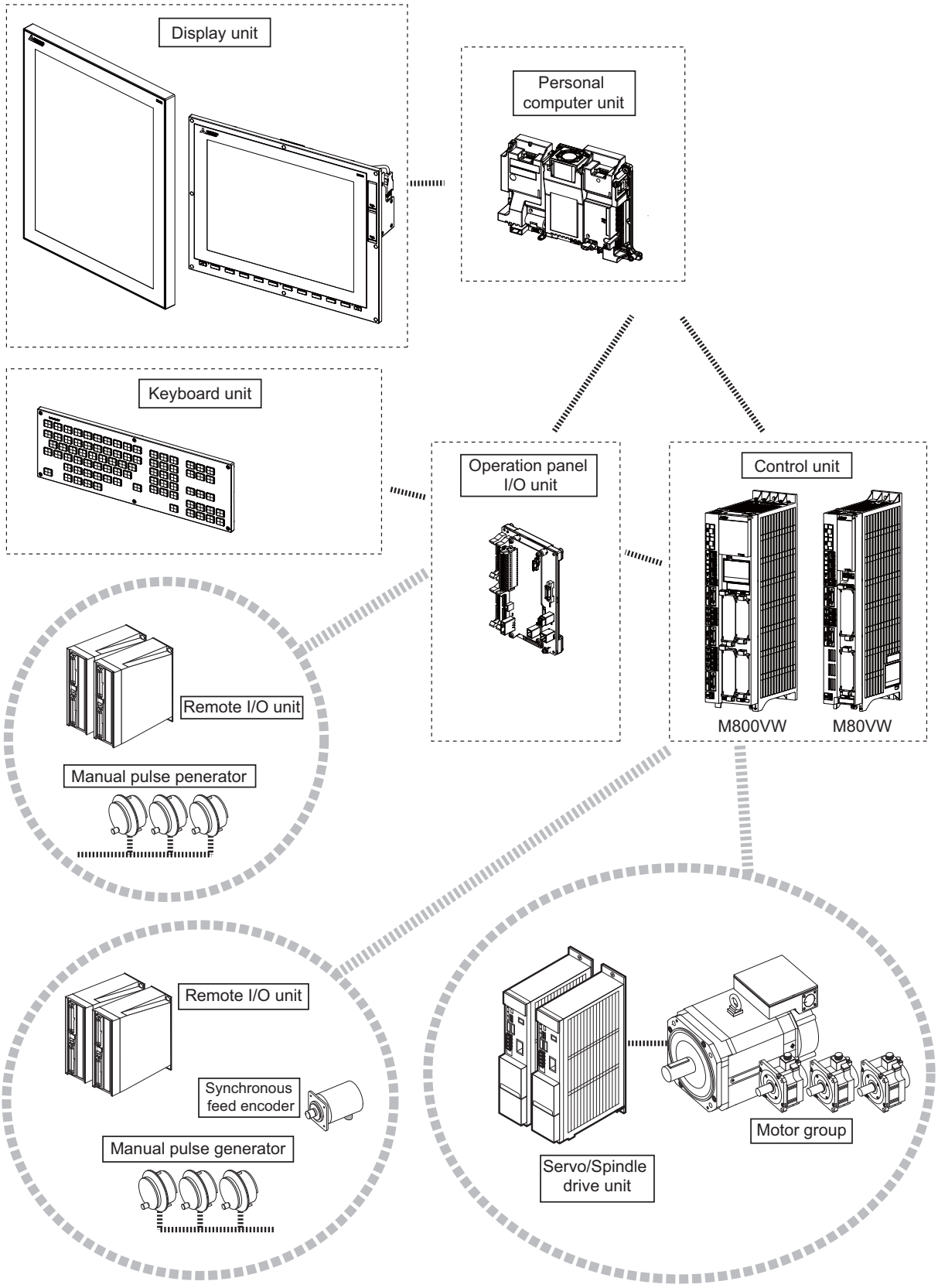

Note

(1) For the drive unit configuration, refer to the drive unit's manual.

■For M800VS/M80V

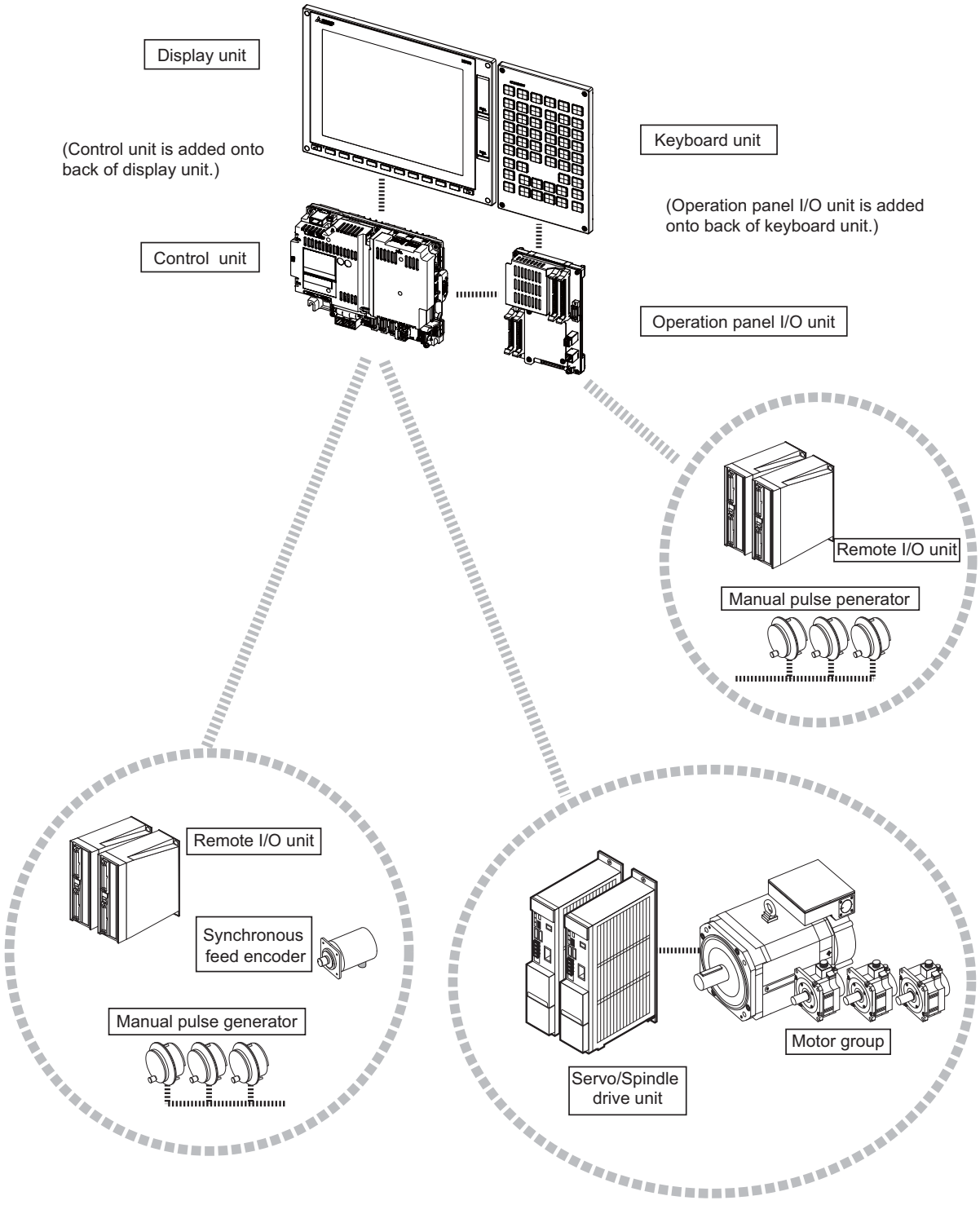

Note

(1) For the drive unit configuration, refer to the drive unit's manual.

1.2 General Connection Diagram

Typical general connection diagrams for respective models are described.

Refer to the following chapters for parts where the connection differs depending on the unit configuration.

1.2.5 19-type Display Unit (M800VW/M80VW Series, Windows-based Display Unit)

1.2.6 19-type Display Unit (M800VS/M80V Series)

1.2.7 Connecting an Operation Panel I/O Unit (FCU8-DX834) (M800VS/M80V Series)

1.2.8 Connecting a Pulse-controlled Inverter (M80V Series)

1.2.9 Connecting an Image Input Expansion Unit (M800VS/M80V Series)

1.2.10 Connecting a Laser I/F Unit

1.2.11 Connecting a BiSS Encoder (M800VS/M80V Series)

1.2.1 M800VW Series, Windows-based Display Unit

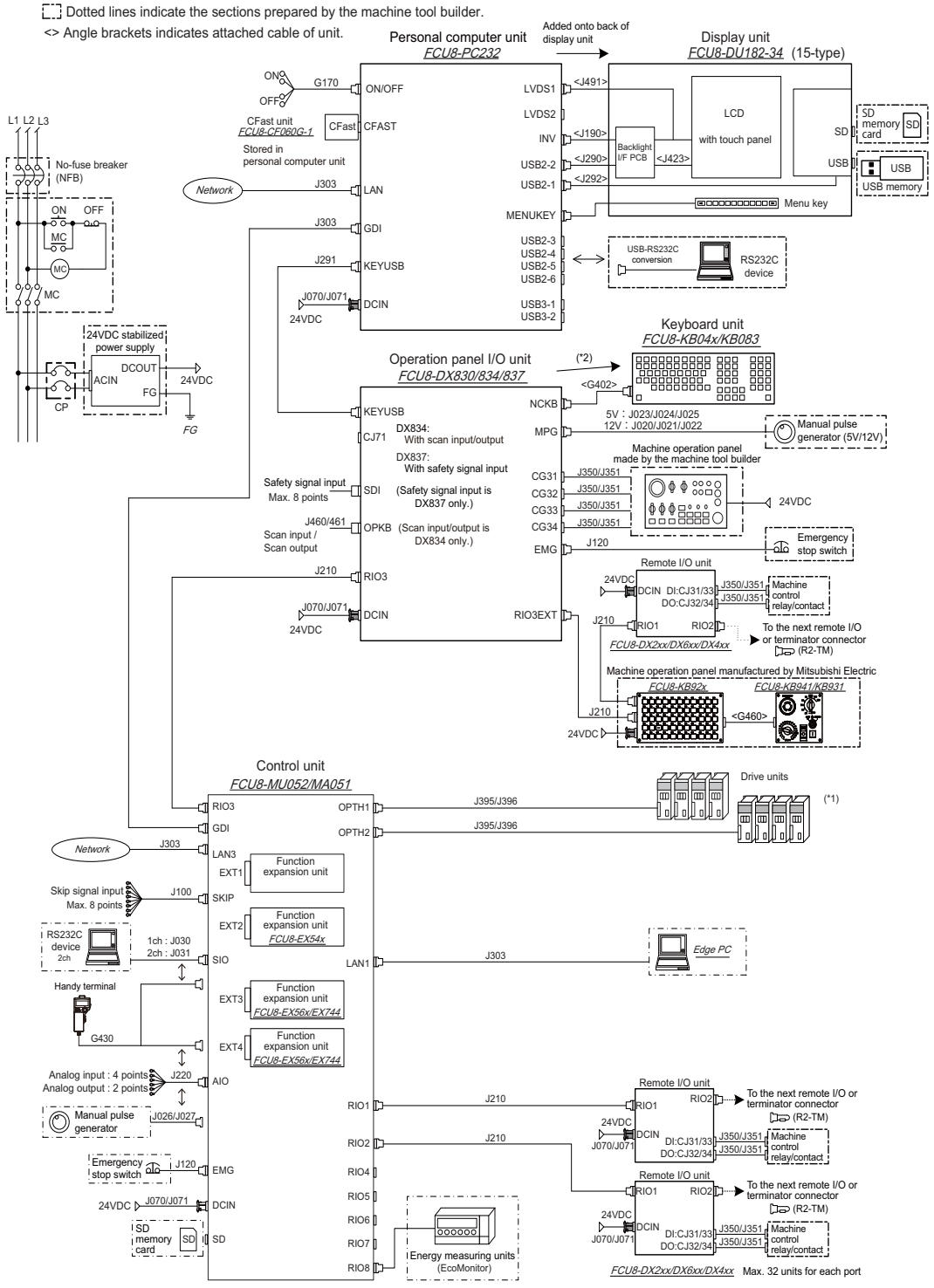

(*1) For information on how to connect the drive unit, refer to the drive unit's manual.

(*2) When using a keyboard unit, install the operation panel I/O unit on the back of the keyboard unit.

Note

(1) For details on connecting to the machine operation panel manufactured by Mitsubishi Electric, refer to "M800VW/M80VW Series Connection and Setup Manual".

1.2.2 M80VW Series, Windows-based Display Unit

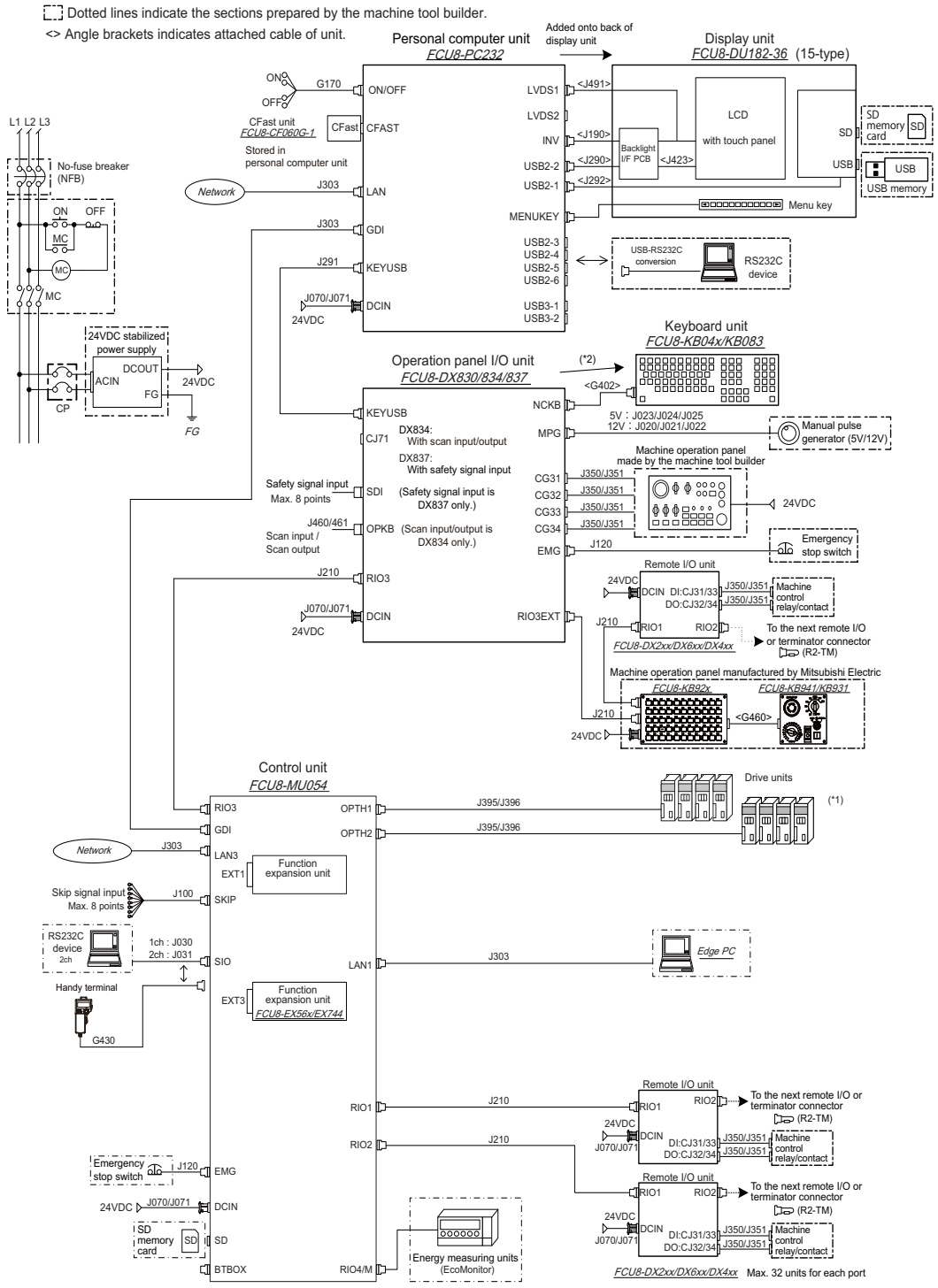

(*1) For information on how to connect the drive unit, refer to the drive unit's manual.

(*2) When using a keyboard unit, install the operation panel I/O unit on the back of the keyboard unit.

Note

(1) When the handle of handy terminal is used, connect ENC connector of G430 cable to MPG connector of the operation panel I/O unit.
Because the pin assignment of ENC connector of G430 is different from that of MPG connector of the operation panel I/O unit, conversion is required.
The conversion cable needs to be prepared by the MTB.

(2) For details on connecting to the machine operation panel manufactured by Mitsubishi Electric, refer to "M800VW/ M80VW Series Connection and Setup Manual".

1.2.3 M800VS Series

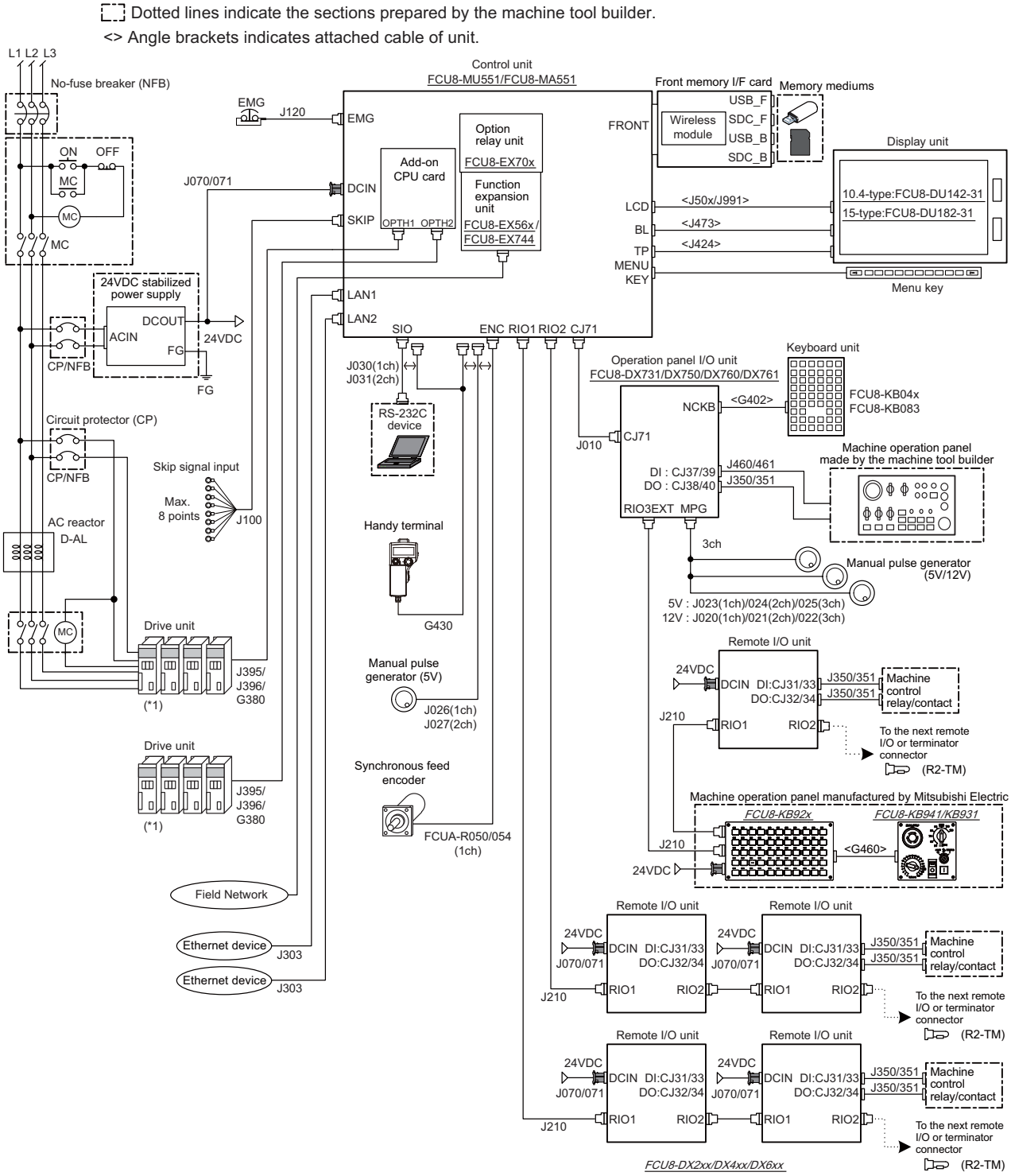

(*1) For information on how to connect the drive unit, refer to the drive unit's manual.

Note

(1) For details on connecting to the machine operation panel manufactured by Mitsubishi Electric, refer to "M800VS/M80V Series Connection and Setup Manual".

1.2.4 M80V Series

The general connection diagram with smart safety observation function is as below.
Without smart safety observation function, functional safety expansion unit is not installed in the control unit.

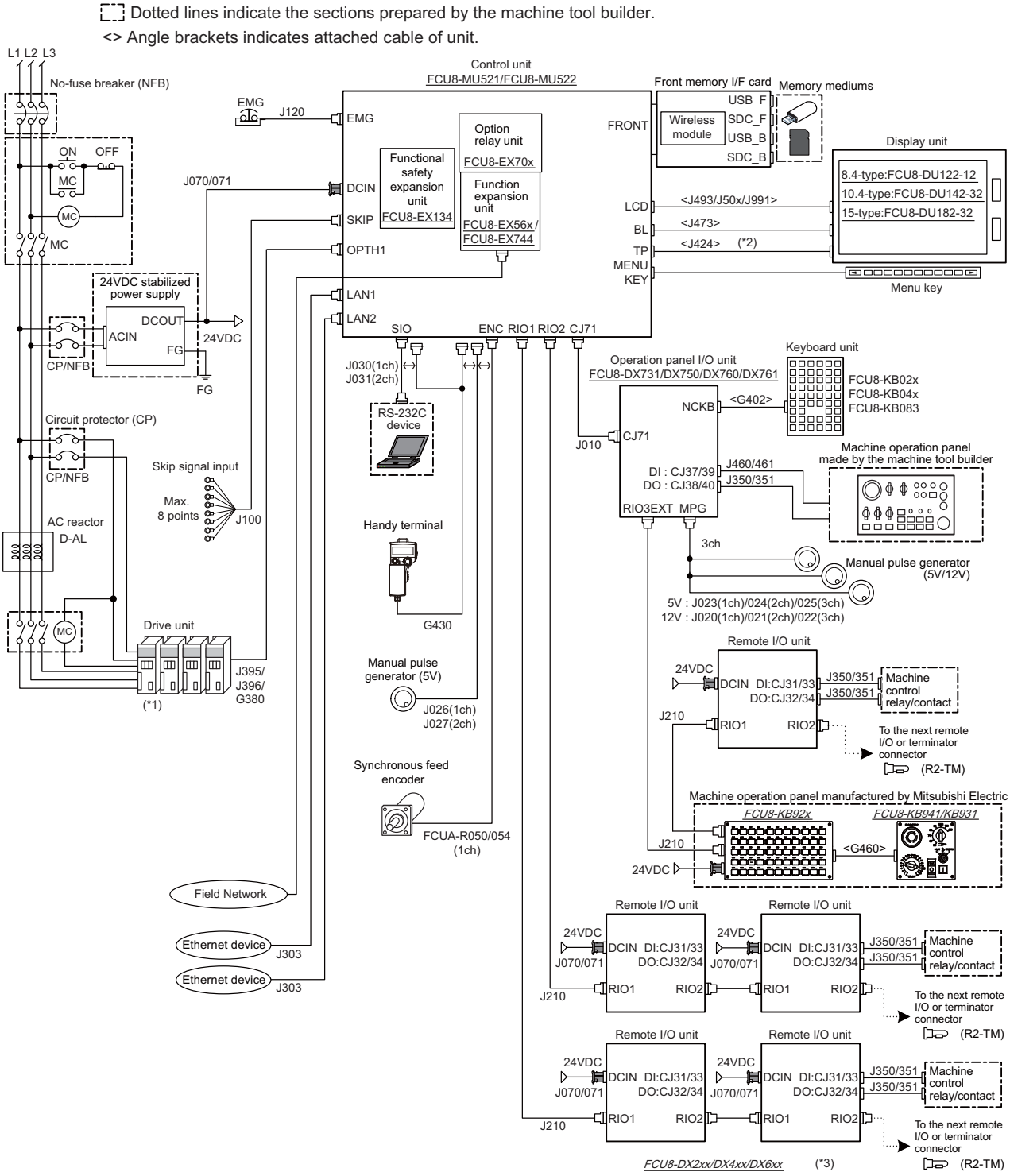

(*1) For information on how to connect the drive unit, refer to the drive unit's manual.

(*2) For the 8.4-type display unit, TP connector is not used.

(*3) The safety remote I/O unit is available only when the functional safety expansion unit is mounted.

Note

(1) For details on connecting to the machine operation panel manufactured by Mitsubishi Electric, refer to "M800VS/M80V Series Connection and Setup Manual".

1.2.5 19-type Display Unit (M800VW/M80VW Series, Windows-based Display Unit)

Dotted lines indicate the sections which is different from the 15-type display unit in the 19-type display unit.

19-type display unit

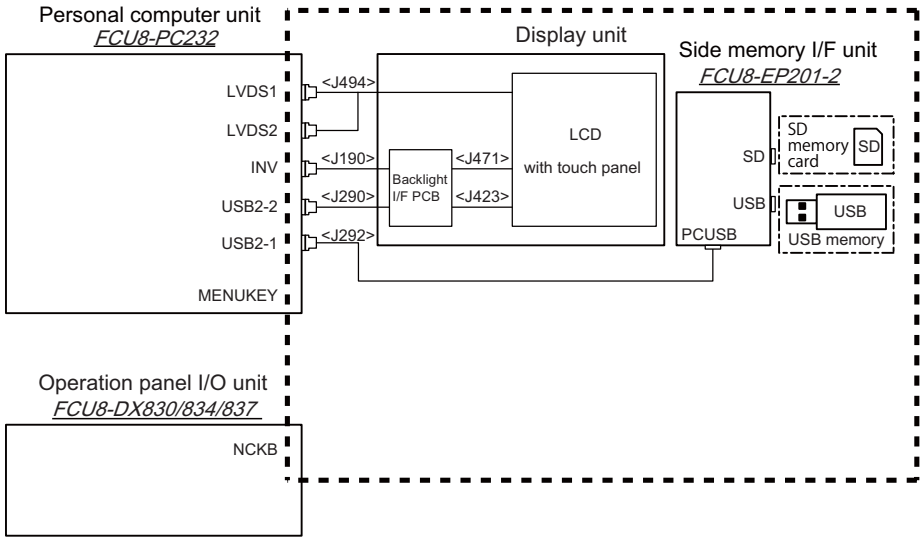

- The personal computer unit is installed on the back of the display unit.

M800VW Series display unit	M80VW Series display unit
FCU8-DU193-75 FCU8-DU194-75	FCU8-DU193-77 FCU8-DU194-77

15-type display unit

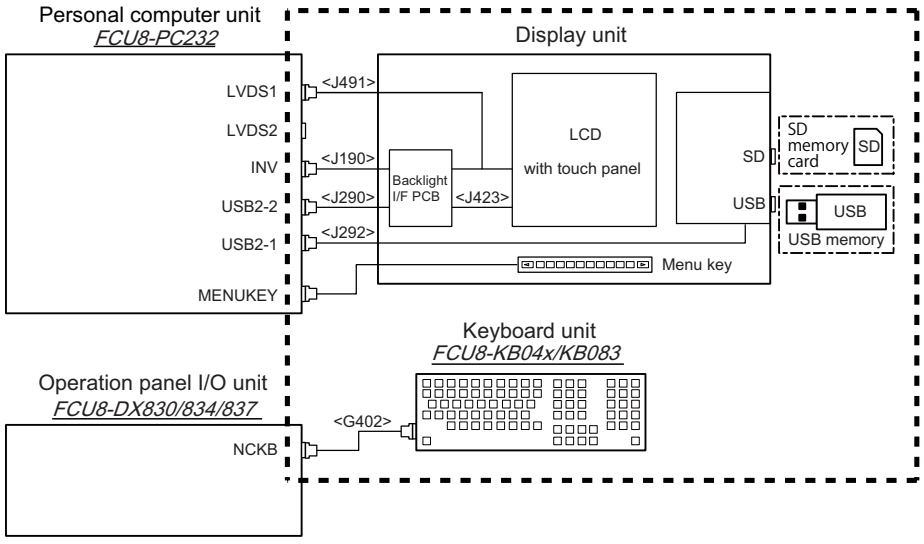

- The personal computer unit is installed on the back of the display unit.
- The operation board I/O unit is installed on the back of the keyboard unit.

M800VW Series display unit	M80VW Series display unit
FCU8-DU182-34	FCU8-DU182-36

1.2.6 19-type Display Unit (M800VS/M80V Series)

Dotted lines indicate the sections which is different from the other display units (8.4-type, 10.4-type, and 15-type) in the display unit (19-type).

To connect the 19-type display unit to the CNC, an image input expansion unit is required.

19-type display unit

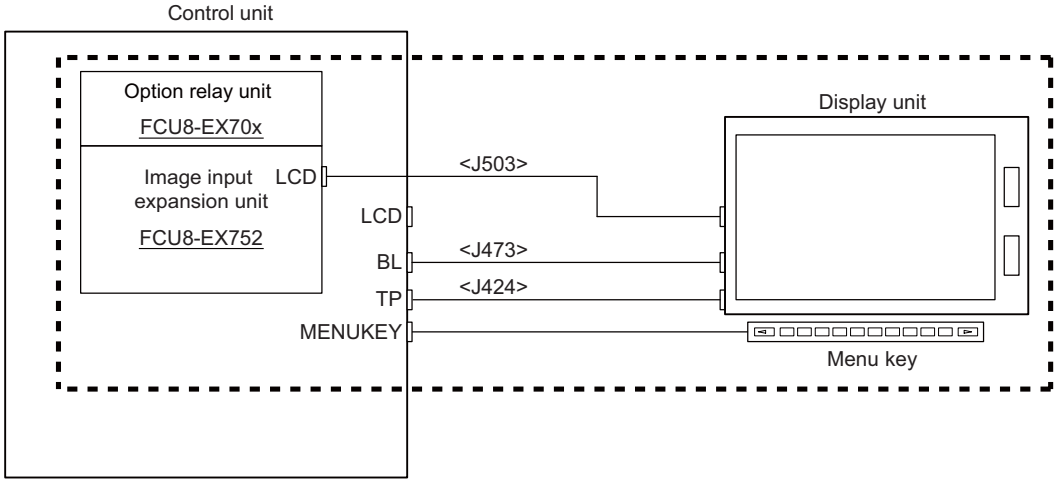

Other display units (8.4-type, 10.4-type and 15-type)

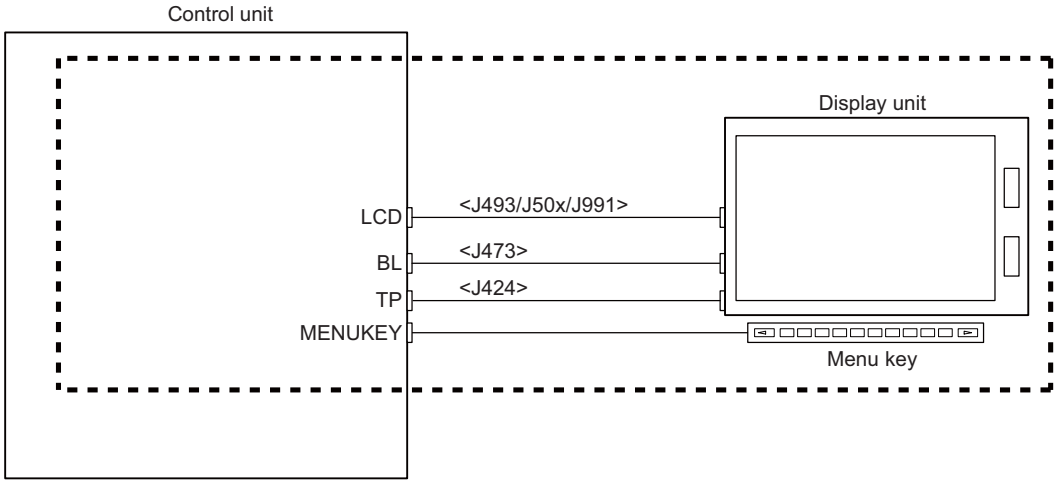

1.2.7 Connecting an Operation Panel I/O Unit (FCU8-DX834) (M800VS/M80V Series)

Dotted lines indicate the sections which is different from the FCU8-DX731/DX750/DX760/DX761 in FCU8-DX834.

FCU8-DX834

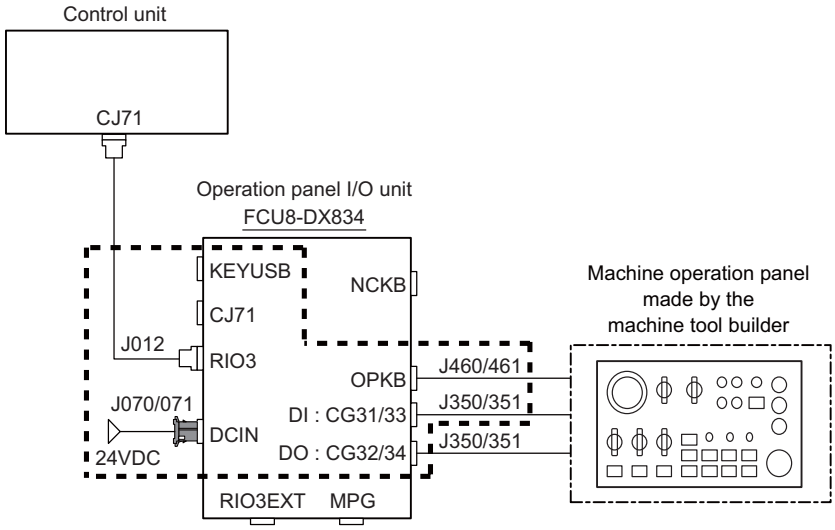

FCU8-DX731/DX750/DX760/DX761

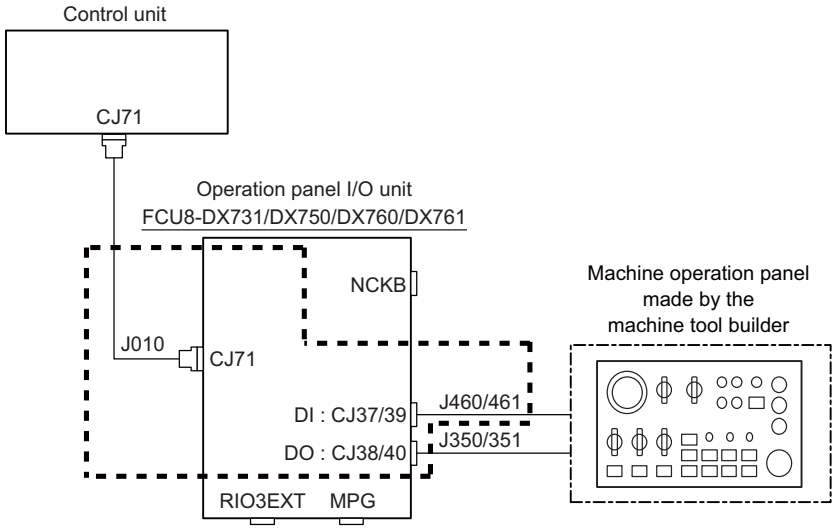

1.2.8 Connecting a Pulse-controlled Inverter (M80V Series)

Pulse-controlled inverter refers to an inverter capable of controlling spindle operation through pulse train input.

Connect the pulse-controlled inverter to RIO1 and RIO2 of the control unit.
The parts surrounded by the dotted lines in the figures below are different.

Connecting a pulse-controlled inverter

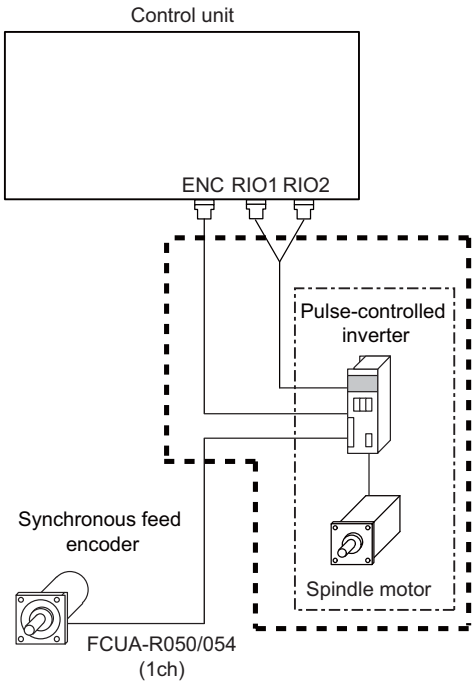

ENC/RIO1/RIO2 when the spindle drive unit is connected

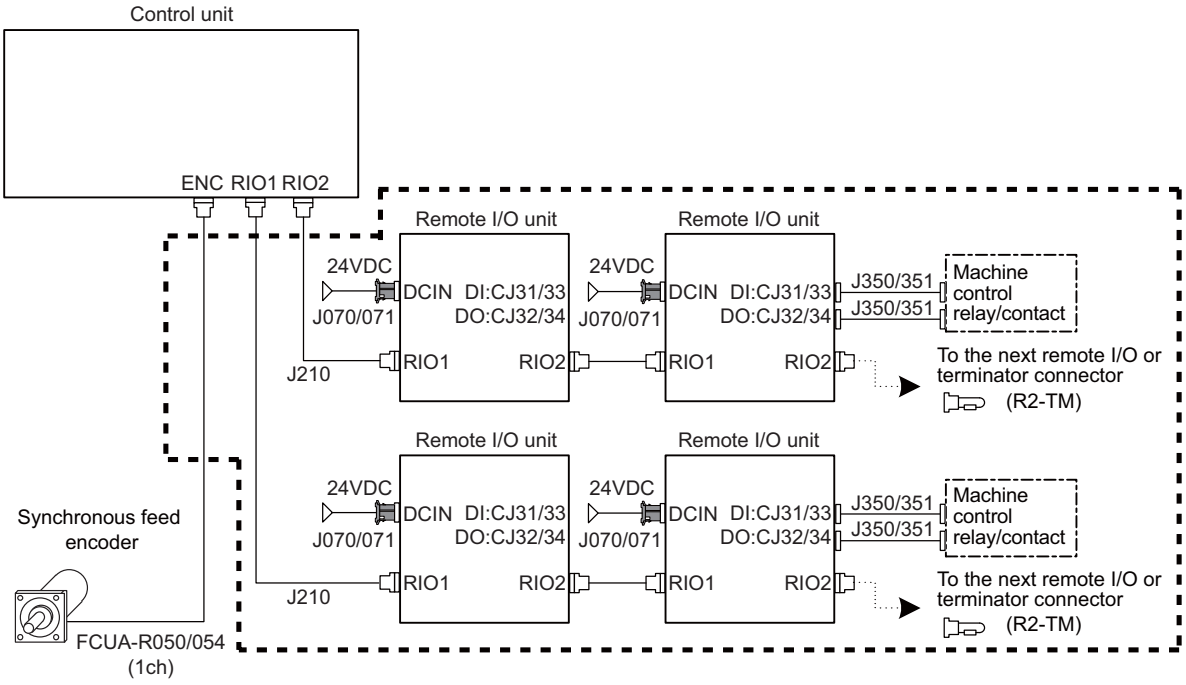

Note

(1) When the pulse-controlled inverter is connected, the remote I/O unit cannot be connected to either of the RIO1 connector or the RIO2 connector.

1.2.9 Connecting an Image Input Expansion Unit (M800VS/M80V Series)

Some connections are different depending on the display unit.

10.4-type display unit and 15-type display unit

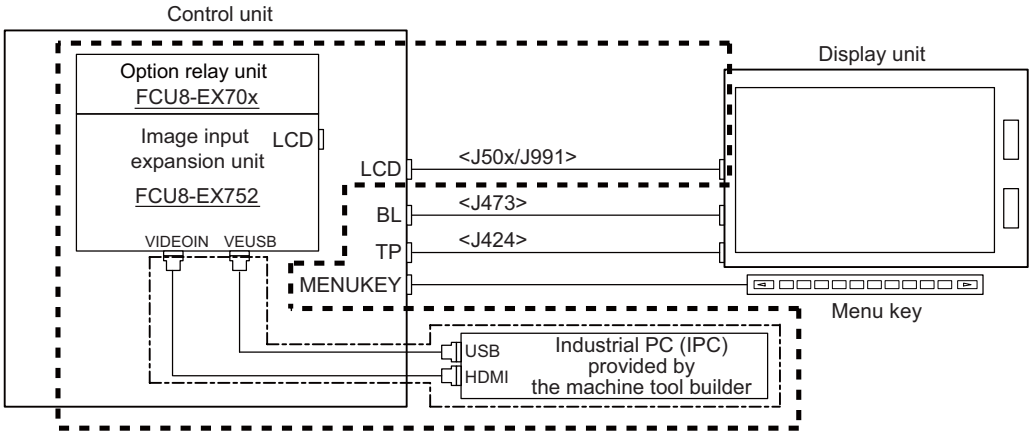

19-type display unit

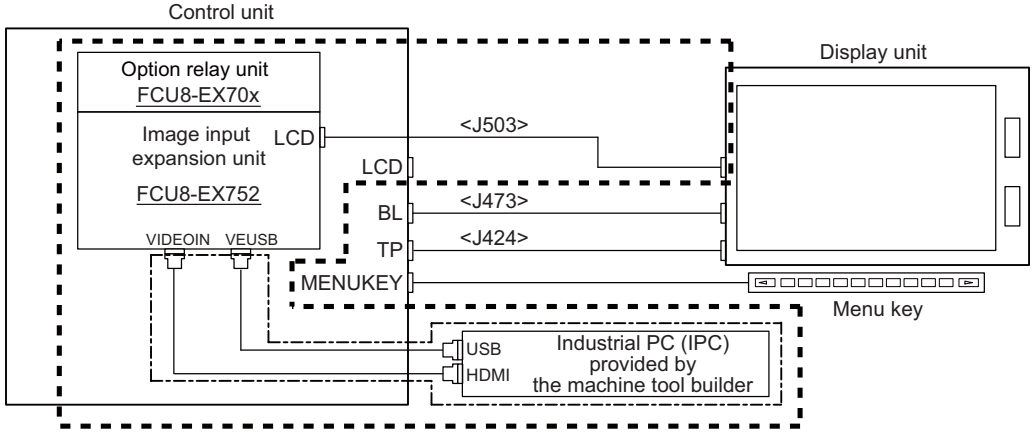

Connection without the image input expansion unit

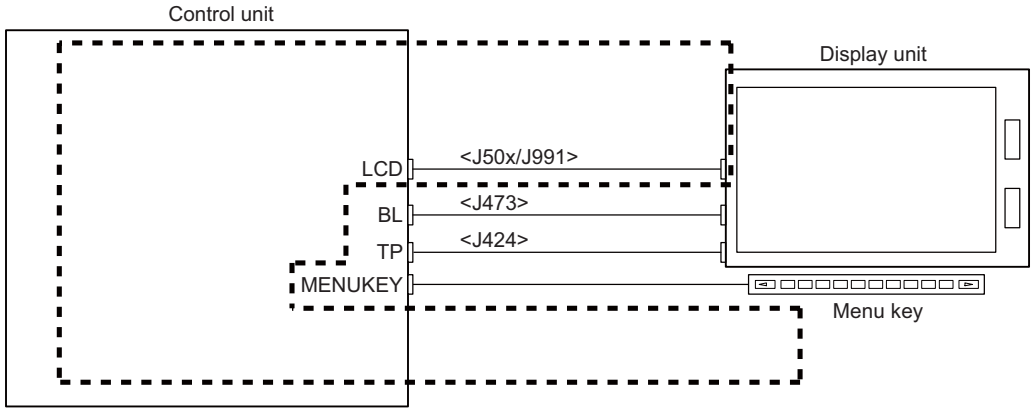

Note

(1) 8.4-type display unit does not support the image input expansion unit.

1.2.10 Connecting a Laser I/F Unit

Connect the laser I/F unit to RIO1 or RIO2 of the control unit.
The following figure shows an example of connecting the laser I/F unit to RIO2.

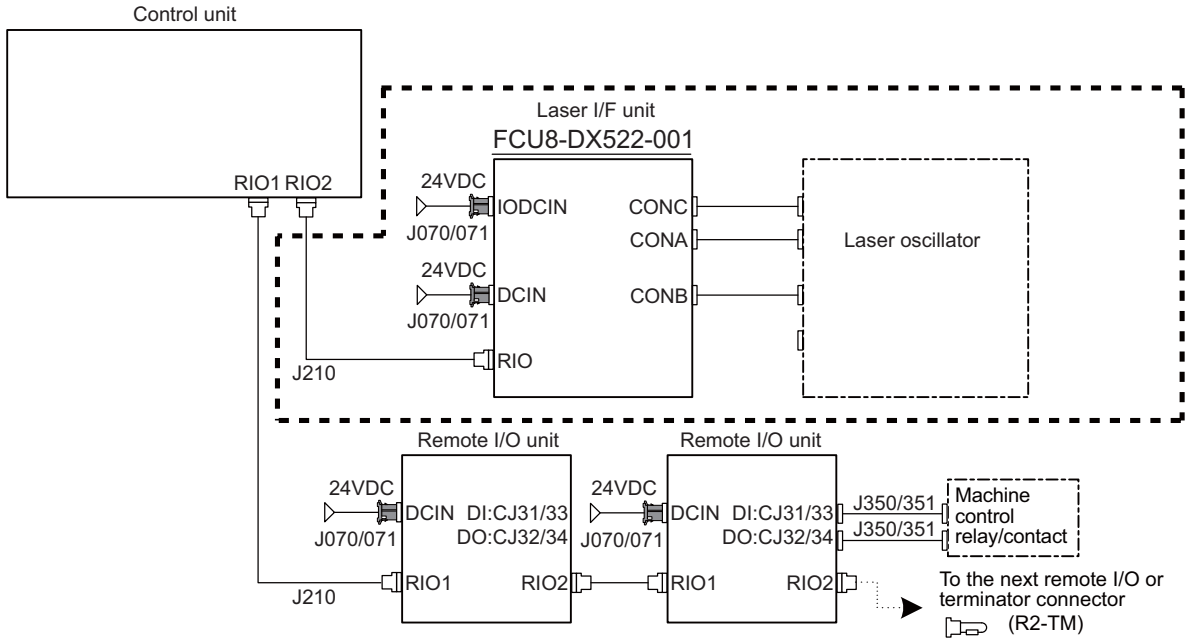

Note

(1) The laser I/F unit occupies all one channel; therefore, a remote I/O unit cannot be connected before or after the laser I/F unit.

1.2.11 Connecting a BiSS Encoder (M800VS/M80V Series)

BiSS encoder refers to an encoder compatible with BiSS-C.
Connect the BiSS encoder to the ENC connector and the RIO2 connector of the control unit.

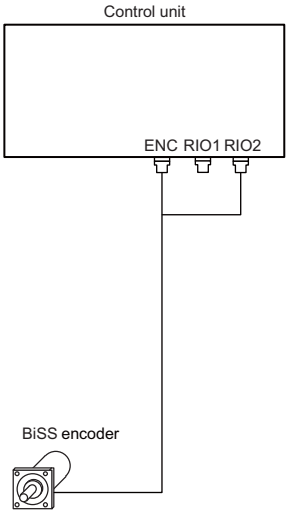

1.3 How to Check the System Configuration

1.3.1 System Configuration Screen

Diagn – Config

Select the menu [Config] on the diagnosis (Diagn) screen to display the hardware configuration (card name and sub-number), software configuration (software number and sub-number), and PLC program configuration (file name, file label, and execution type).

■Software configuration

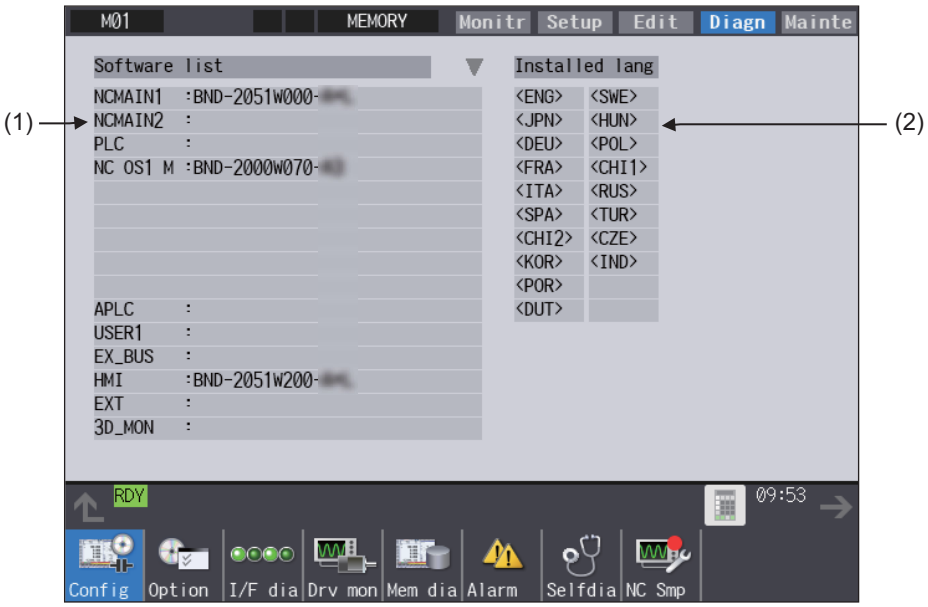

■Hardware configuration

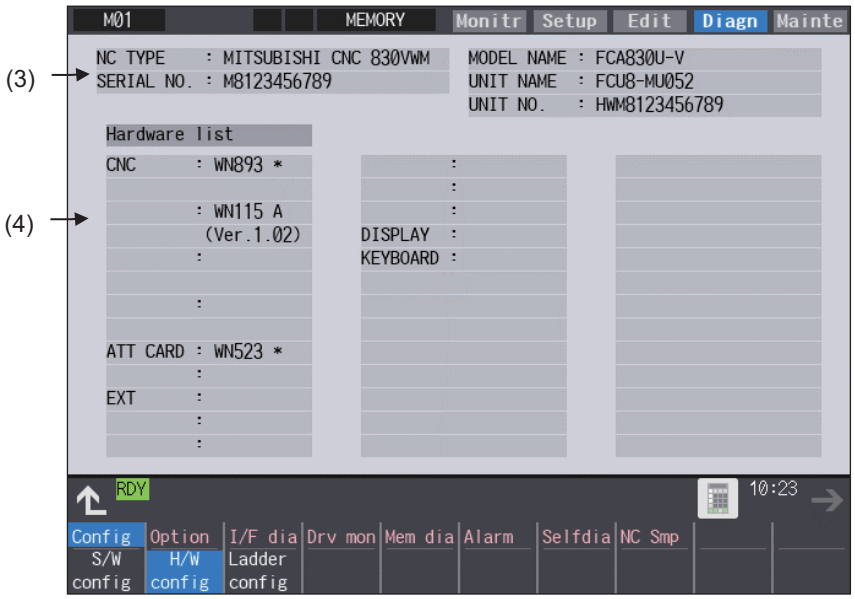

■PLC program configuration

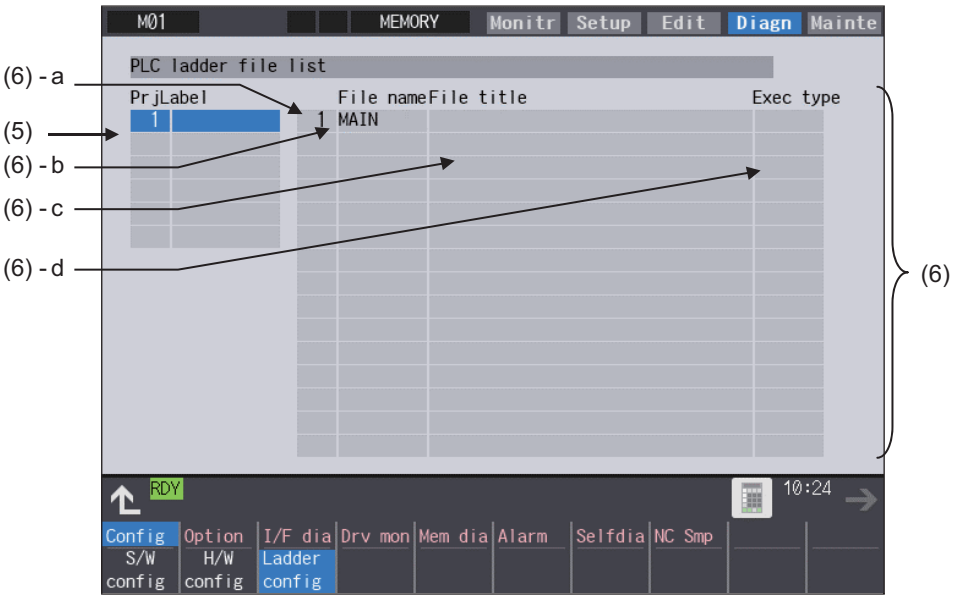

Display items

Display items	Details		Remarks
(1) Software list	This displays a list of the software being used. See the next/previous page by using PAGE/PAGE keys, or ▲/▼ keys on the screen.		▲/▼ keys appear only when the screen has items on the next/previous page.
(2) Installed lang	This displays a list of installed languages. <ENG>: English <JPN>: Japanese <DEU>: German <FRA>: French <ITA>: Italian <SPA>: Spanish <CHI2>: Traditional Chinese <KOR>: Korean <POR>: Portuguese <DUT>: Dutch	<SWE>: Swedish <HUN>: Hungarian <POL>: Polish <CHI1>: Simplified Chinese <RUS>: Russian <TUR>: Turkish <CZE>: Czech <IND>: Indonesian <VIE>: Vietnamese	
(3) NC serial No.	This displays the NC model name, serial No, system type, and unit type.		
	NC TYPE:	NC type	
	MODEL NAME:	System type name	
	SERIAL NO.:	Serial No.	
	UNIT NAME:	Unit type	

Display items	Details			Remarks
(4) Hardware list	The hardware names are displayed. See the next/previous page by using PAGE▲ / PAGE▼ keys, or ▲ / ▼ keys on the screen. The following display is an example.			▲ / ▼ keys appear only when the screen has items on the next/previous page.
	CNC	:WN125 :WN893 :WN094	Main card Back panel card 7SEG-RSW card Existing cards are displayed from the top in the above order.	A single unit of CNC unit is formed with a maximum of 4 PCBs. All of these cards are connected by bus.
	ATT CARD	:WN523 :	Front-side SD IF card	
	EXT	:WN561 :WN563 :WN564 :WN511	CC-Link expansion unit PROFIBUS-DP expansion unit CC-Link IE Field unit or EtherNet/IP unit (WN564 and WN511 are one set.) <Note> ♦For the expansion unit type, refer to the description of expansion unit. Existing expansion units are displayed from the top in the above order.	The extension unit is an optional specification of hardware. The back panel and maximum of 5 cards are displayed.
	DISPLAY	:DU193	Display unit	The unit type varies by model.
	KEYBOARD	:KB091	Keyboard unit	The unit type varies by the keyboard unit being connected.
	ECOMON1 to ECOMON16	:EMU4-BD1 to :EMU4-HD1	EcoMonitorLight unit	The unit type varies depending on the connected EcoMonitor Light unit. The status for up to 16 part systems is displayed.
	RIO1[n] RIO2[n] RIO3[n]	:WN301 :WN301 :WN301	Remote IO unit 1 (n = 1 to 64) Remote IO unit 2 (n = 1 to 64) Remote IO unit 3 (n = 1 to 64)	The unit type varies by the remote I/O unit being connected. Maximum of 3 channels are displayed.
(5) Project	The list of project Nos. is displayed. If the selected project is switched with [↑] or [↓] key, the list of ladder files that belong to the project is displayed.			Maximum of 10 single-byte alphanumeric characters for the label

Display items	Details		Remarks
(6) PLC ladder file list	This displays the file name, file label, execution type for each PLC ladder program. See the next/previous page by using PAGE▲/PAGE▼ keys, or ▲/▼ keys on the screen.		▲/▼ keys appear only when the screen has items on the next/previous page.
	(a) Registration No.	This displays the registration No. of each PLC program file.	The maximum number of projects to be registered in total is as follows: M800VW/M800VS: 120 M80VW/M80V: 60
	(b) File name	This displays the file name of PLC program file. (data of GX Developer/GX Works2)	Max. 8 characters
	(c) File label	This displays this file label of PLC program file. (data of GX Developer/GX Works2)	Max. 32 characters
	(d) Execution type	This displays the execution type of PLC program. HIGH: High-speed PLC program MIDDLE: Middle-speed PLC program INTIAL: Initial state of PLC program WAIT: Standby PLC program LOW: Low-speed PLC program (blank): Not the target of the execution.	

Menus

Menus	Details
S/W config	This displays the software list.
H/W config	This displays the hardware list.
Ladder config	This displays the PLC program list (file name, file label, and execution type).

1.3.2 Option Display Screen

Diagn – Option

Select the menu [Option] on the diagnosis (Diagn) screen to display the contents of the optional specifications registered in the NC.

The optional specification items are displayed by name. If all of the optional specifications cannot be seen in one screen, the rest of items can be displayed by pressing the page up/down keys.

Display items

Display items	Details	Remarks
Option items	The list of currently usable optional specifications is displayed. As for the currently usable items, the background color is displayed in blue. The items set when the power supply was turned ON can be currently used. See the next/previous page by using PAGE▲/PAGE▼ keys, or ▲/▼ keys on the screen.	▲/▼ keys appear only when the screen has items on the next/previous page.

1.4 Each Unit Status Display

Each unit status can be confirmed by checking the LED mounted on each unit.

1.4.1 Control Unit

■FCU8-MU052 (M830VW) /FCU8-MA051 (M850VW)

[LED]

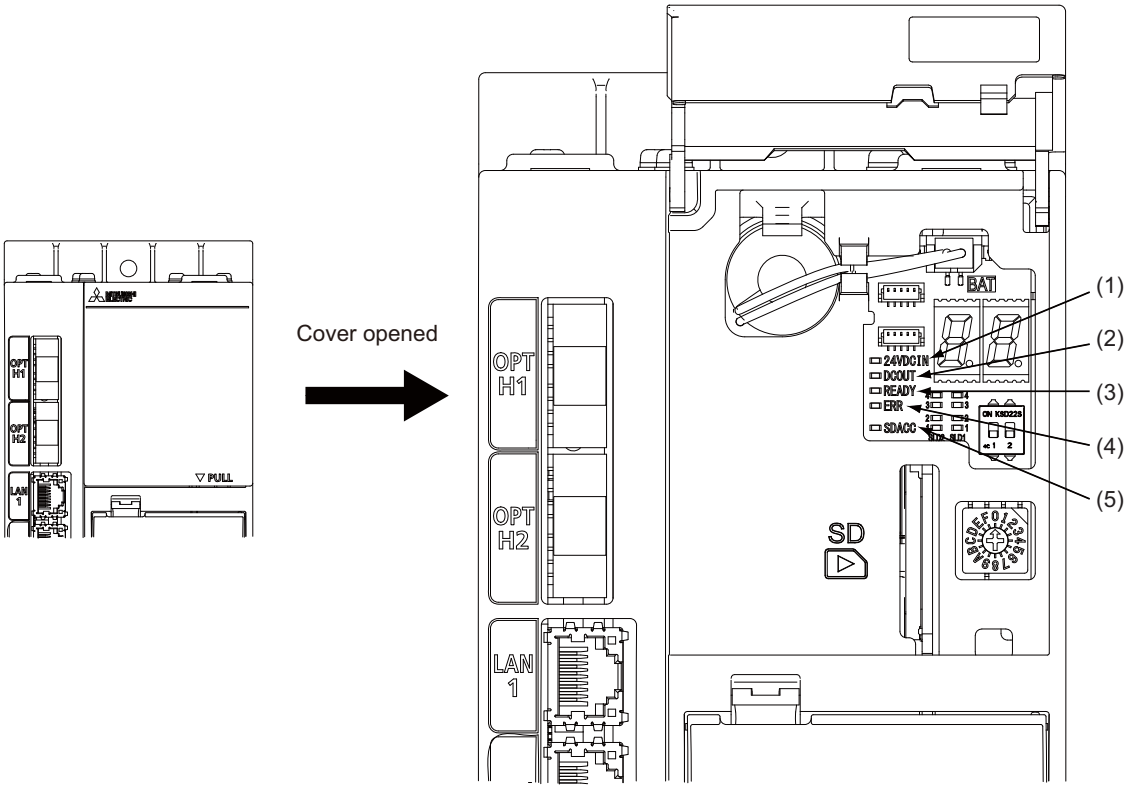

No.	Name	Lamp state	Details
(1)	24VDCIN	Lit (Green)	24V power is being supplied from the external power supply.
		Not lit	The followings may have caused an error: •No 24V-power supply from the external power supply. •Disconnection of fuse near DCIN connector. •Failure of LED.
(2)	DCOUT	Lit (Green)	The followings are all successfully output: 5V and 3.3V generated from 24V; 2.5V,1.8V,1.5V,1.15V, and 1.1V on the main card.
		Not lit	The followings may have caused an error: •No 24V-power supply from the external power supply. •Failure in any of the power output circuits. •Failure of LED or IC which helps turn the LED ON.
(3)	READY	Lit (Green)	Servo ON (or ready ON) state.
		Not lit	Servo OFF (or ready OFF) state.
(4)	ERR	Lit (Red)	H/W is not operating properly. The followings may have caused an error: •Occurrence of NC watchdog error. •Failure of main CPU card.
		Not lit	H/W is operating properly.
(5)	SDACC	Flashing (Green)	Accessing to front-side SD card.
		Not lit	Not accessing to front-side SD card.

■FCU8-MU054 (M80VW)

[LED]

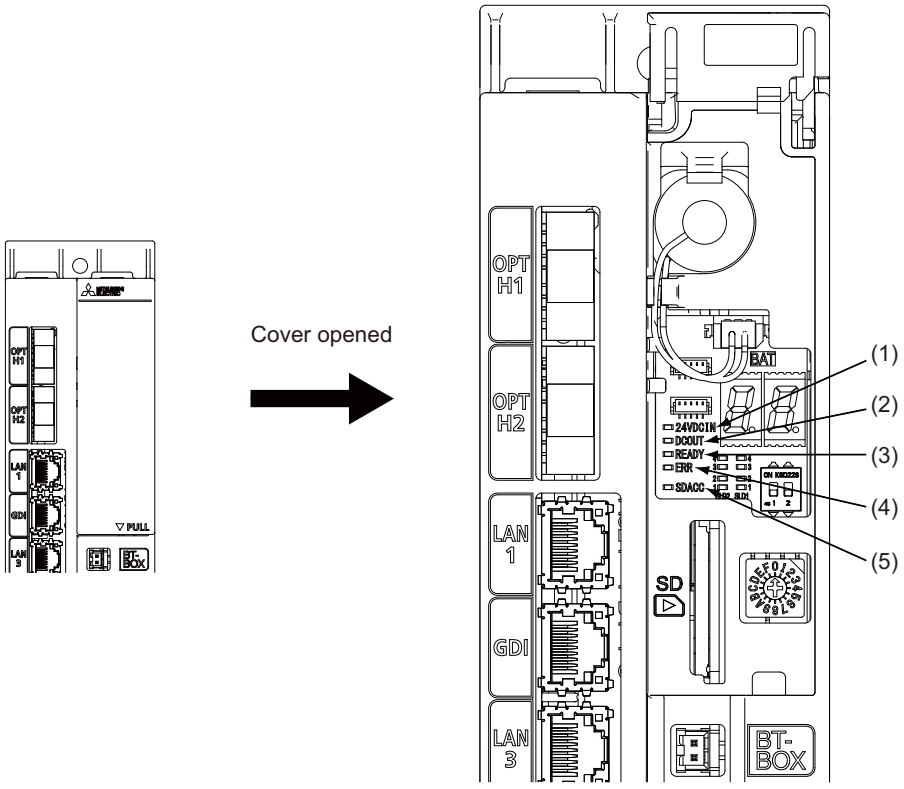

No.	Name	Lamp state	Details
(1)	24VDCIN	Lit (Green)	24V power is being supplied from the external power supply.
		Not lit	The followings may have caused an error: •No 24V-power supply from the external power supply. •Disconnection of fuse near DCIN connector. •Failure of LED.
(2)	DCOUT	Lit (Green)	The followings are all successfully output: 5V and 3.3V generated from 24V; 2.5V,1.8V,1.5V,1.15V, and 1.1V on the main card.
		Not lit	The followings may have caused an error: •No 24V-power supply from the external power supply. •Failure in any of the power output circuits. •Failure of LED or IC which helps turn the LED ON.
(3)	READY	Lit (Green)	Servo ON (or ready ON) state.
		Not lit	Servo OFF (or ready OFF) state.
(4)	ERR	Lit (Red)	H/W is not operating properly. The followings may have caused an error: •Occurrence of NC watchdog error. •Failure of main CPU card.
		Not lit	H/W is operating properly.
(5)	SDACC	Flashing (Green)	Accessing to front-side SD card.
		Not lit	Not accessing to front-side SD card.

■FCU8-MU551/FCU8-MA551 (M800VS)

[LED]

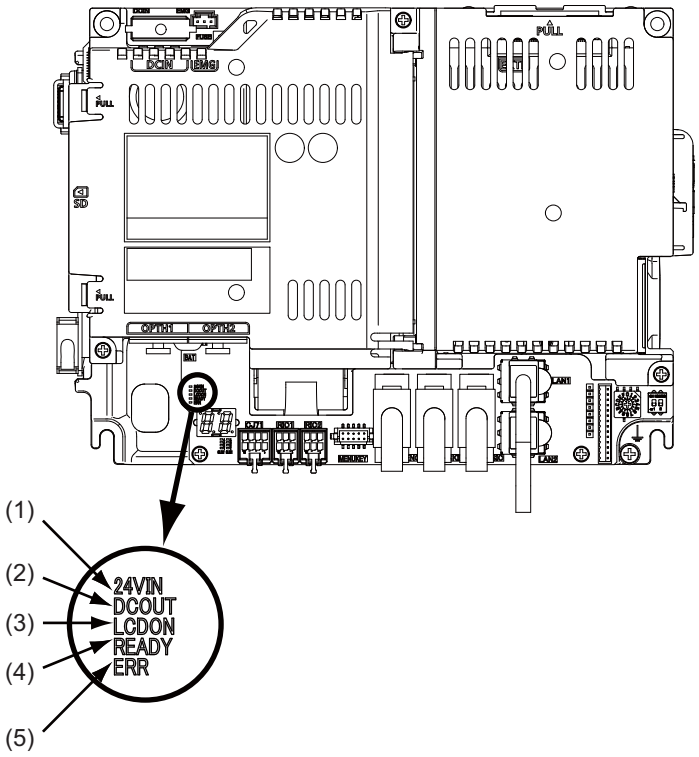

No.	Name	Lamp state	Details
(1)	24VIN	Lit (Green)	24VDC power is being supplied from the external power supply.
		Not lit	The followings may have caused an error: •No 24VDC-power supply from the external power supply. •Disconnection of fuse near DCIN connector. •Failure of LED.
(2)	DCOUT	Lit (Green)	Internal voltage is normally output.
		Not lit	The followings may have caused an error: •No 24V-power supply from the external power supply. •Failure in any of the power output circuits. •Failure of LED or IC which helps turn the LED ON.
(3)	LCDON	Lit (Green)	12VDC for the backlight of display unit is normally output.
		Not lit	The followings may have caused an error: •Failure of 12VDC output in control unit. •24VDC input voltage is +20V or less.
(4)	READY	Lit (Green)	Ready ON state.
		Not lit	Ready OFF state.
(5)	ERR	Lit (Red)	H/W is not operating properly. The followings may have caused an error: •Occurrence of NC watchdog error. •Failure of main CPU card.
		Not lit	H/W is operating properly.

■FCU8-MU521/FCU8-MU522 (M80V)

[LED]

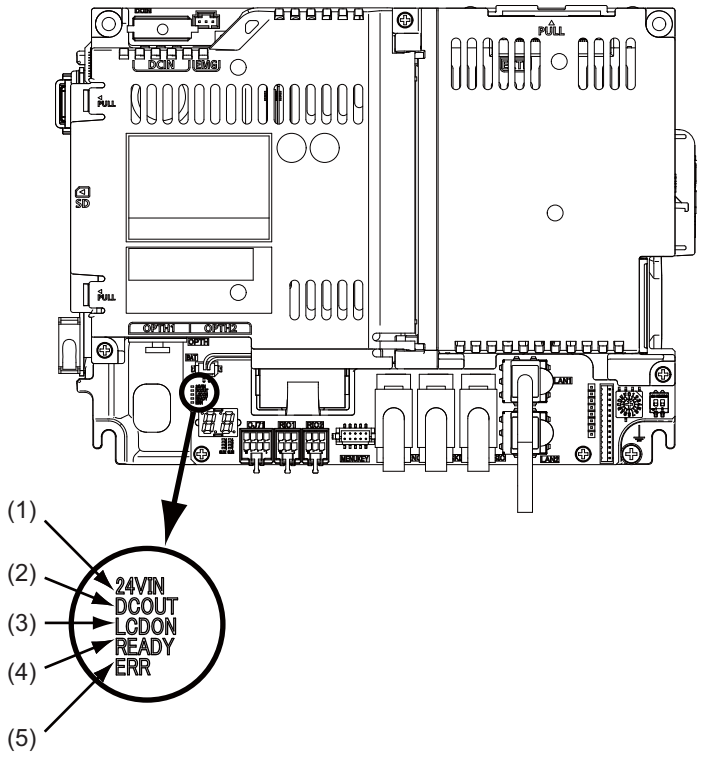

No.	Name	Lamp state	Details
(1)	24VIN	Lit (Green)	24VDC power is being supplied from the external power supply.
		Not lit	The followings may have caused an error: •No 24VDC-power supply from the external power supply. •Disconnection of fuse near DCIN connector. •Failure of LED.
(2)	DCOUT	Lit (Green)	Internal voltage is normally output.
		Not lit	The followings may have caused an error: •No 24V-power supply from the external power supply. •Failure in any of the power output circuits. •Failure of LED or IC which helps turn the LED ON.
(3)	LCDON	Lit (Green)	12VDC for the backlight of display unit is normally output.
		Not lit	The followings may have caused an error: •Failure of 12VDC output in control unit. •24VDC input voltage is +20V or less.
(4)	READY	Lit (Green)	Ready ON state.
		Not lit	Ready OFF state.
(5)	ERR	Lit (Red)	H/W is not operating properly. The followings may have caused an error: •Occurrence of NC watchdog error. •Failure of main CPU card.
		Not lit	H/W is operating properly.

1.4.2 Personal Computer Unit

■FCU8-PC232 (M800VW/M80VW)

[LED]

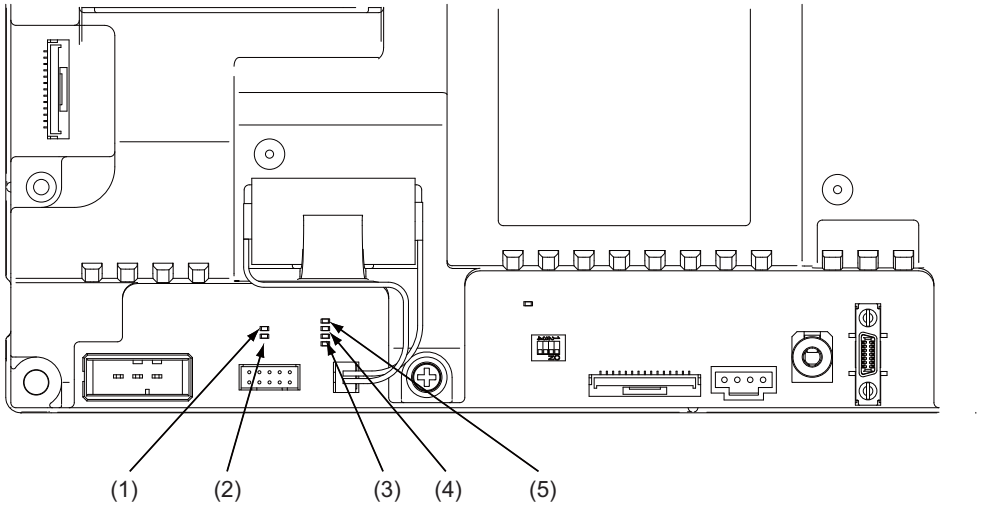

No.	Name	Function	Color	State	
				Normal	At fault
(1)	DCIN	24VDC input observation	Green	Lit	Not lit
(2)	DCOUT	DC internal power supply output observation	Green	Lit	Not lit
(3)	12V	12VDC output observation	Green	Lit	Not lit
(4)	5V	5VDC output observation	Green	Lit	Not lit
(5)	3.3V	3.3VDC output observation	Green	Lit	Not lit

1.4.3 Operation Panel I/O Unit

■FCU8-DX830/FCU8-DX834/FCU8-DX837 (M800VW/M80VW)

[LED]

FCU8-DX830/FCU8-DX837	FCU8-DX834
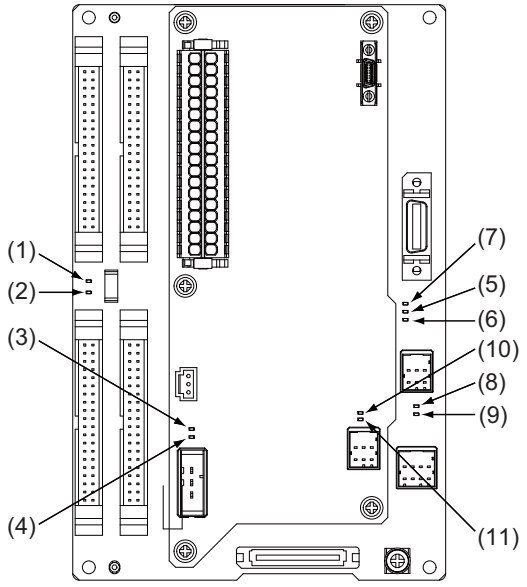	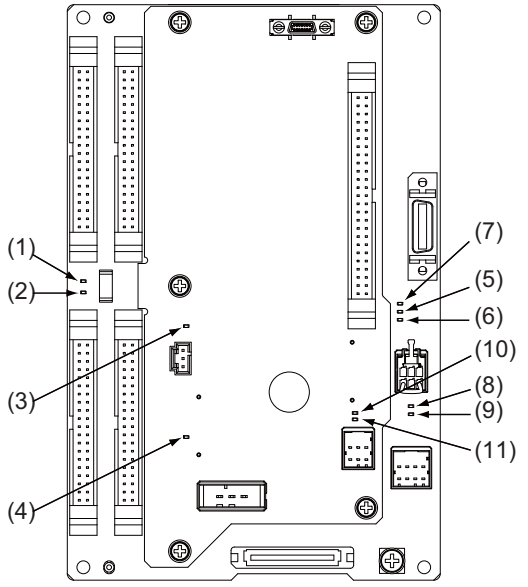

No.	Name	Function	Color	State		Supplement
				Normal	At fault	
(1)	FUSE	Fuse status	Green	Lit	Not lit	Not lit when a fuse has been blown out.
(2)	DOCOM	Energization status of DC24V input (DOCOM) of CG32/CG34 connector	Green	Lit	Not lit	Lit when a current is applied.
(3)	EMG	Emergency stop input status	Red	Not lit	Lit	Lit when an emergency stop has occurred.
(4)	24VDCIN	Energization status of 24VDC input of DCIN connector	Green	Lit	Not lit	Lit when a current is applied.
(5)	5VIN	5V power supply circuit status	Green	Lit	Not lit	Lit when the circuit is normally operated.
(6)	3VIN	3.3V power supply circuit status	Green	Lit	Not lit	Lit when the circuit is normally operated.
(7)	12VON	12V power supply circuit status	Green	Lit	Not lit	Lit when the circuit is normally operated.
(8)	ALM1	RIO communication error	Red	Not lit	Lit	Lit when RIO communication error has occurred.
(9)	ALM2	RIO communication error	Red	Not lit	Lit	Lit when RIO communication error has occurred.
(10)	ALM3	RIO communication error	Red	Not lit	Lit	Lit when RIO communication error has occurred.
(11)	ALM4	RIO communication error	Red	Not lit	Lit	Lit when RIO communication error has occurred.

■FCU8-DX731/FCU8-DX750/FCU8-DX760/FCU8-DX761/FCU8-DX834 (M800VS/M80V)

[LED]

FCU8-DX731

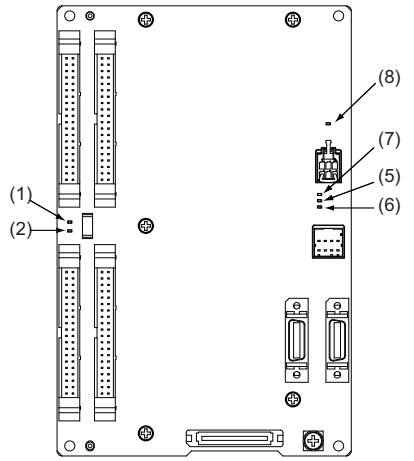

FCU8-DX750

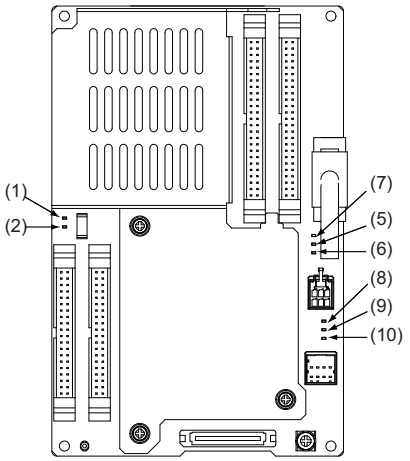

FCU8-DX760

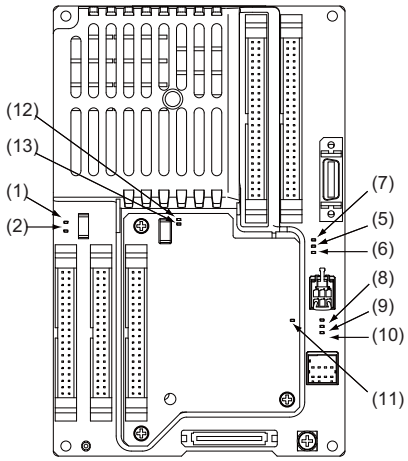

FCU8-DX761

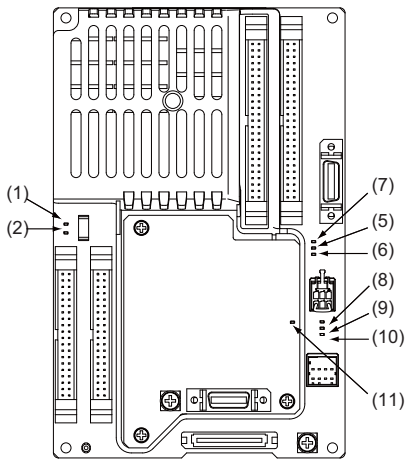

FCU8-DX834

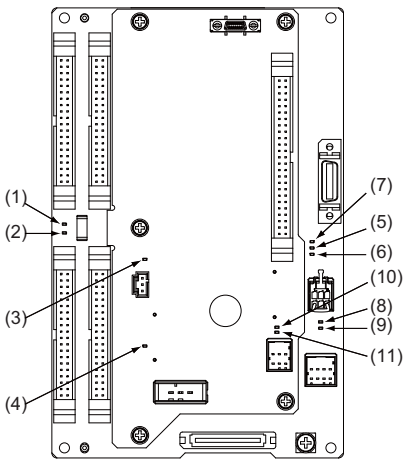

No.	Name	Function	Color	State		Supplement
				Normal	At fault	
(1)	FUSE	Fuse status	Green	Lit	Not lit	Not lit when a fuse has been blown out.
(2)	DOCOM	Energization status of DC24V input (DOCOM) of CG32/CG36/CJ38/CJ40 connector	Green	Lit	Not lit	Lit when a current is applied.
(3)	EMG	Emergency stop input status	Red	Not lit	Lit	Lit when an emergency stop has occurred.
(4)	24VDCIN	Energization status of 24VDC input of DCIN connector	Green	Lit	Not lit	Lit when a current is applied.
(5)	5VIN	5V power supply circuit status	Green	Lit	Not lit	Lit when the circuit is normally operated.
(6)	3VIN	3.3V power supply circuit status	Green	Lit	Not lit	Lit when the circuit is normally operated.
(7)	12VON	12V power supply circuit status	Green	Lit	Not lit	Lit when the circuit is normally operated.
(8)	ALM1	RIO communication error	Red	Not lit	Lit	Lit when RIO communication error has occurred.
(9)	ALM2	RIO communication error	Red	Not lit	Lit	Lit when RIO communication error has occurred.

No.	Name	Function	Color	State		Supplement
				Normal	At fault	
(10)	ALM3	RIO communication error	Red	Not lit	Lit	Lit when RIO communication error has occurred.
(11)	ALM4	RIO communication error	Red	Not lit	Lit	Lit when RIO communication error has occurred.
(12)	FUSE2	Fuse status	Green	Lit	Not lit	Not lit when a fuse has been blown out.
(13)	DOCOM2	Energization status of 24VDC input (DOCOM) of CJ42 connector	Green	Lit	Not lit	Lit when a current is applied.

1.4.4 Remote I/O Unit

■FCU8-DX220/FCU8-DX230/FCU8-DX231/FCU8-DX202/FCU8-DX213/FCU8-DX213-1/FCU8-DX654/FCU8-DX654-1/ FCU8-DX651/FCU8-DX408/FCU8-DX409

[LED: FCU8-DX220/FCU8-DX230/FCU8-DX231/FCU8-DX202/FCU8-DX213/FCU8-DX213-1/FCU8-DX654/ FCU8-DX654-1/FCU8-DX408/FCU8-DX409]

FCU8-DX220/FCU8-DX230/FCU8-DX231/ FCU8-DX213/FCU8-DX213-1/ FCU8-DX654/FCU8-DX654-1	**FCU8-DX202**	**FCU8-DX408**	**FCU8-DX409**
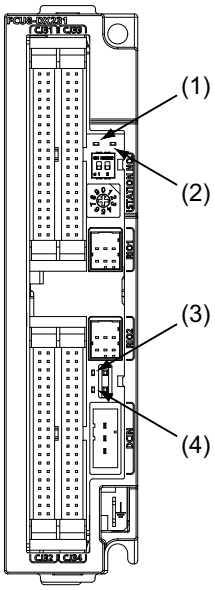	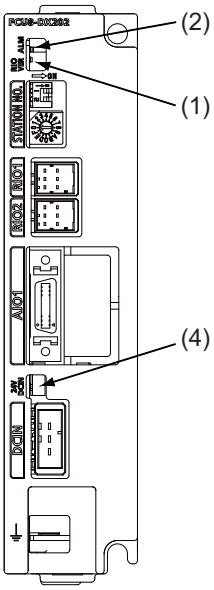	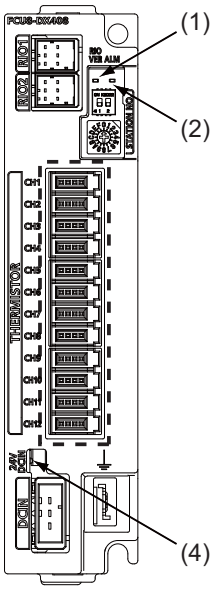	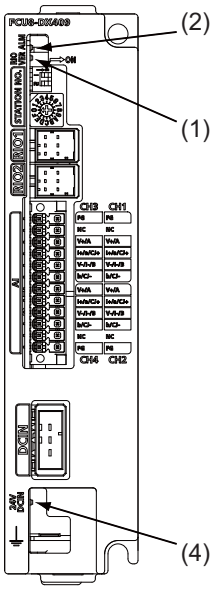

No.	Name	Function	Color	State		Supplement
				Normal	At fault	
(1)	RIOVER	RIO communication status	Green	Lit during RIO 2.0 communication Not lit during RIO 1.0 communication		
(2)	ALM	RIO communication error	Red	Not lit	Lit	Lit when RIO communication error has occurred.
(3)	FUSE	Fuse status	Green	Lit	Not lit	Not lit when a fuse has been blown out.
(4)	24VDCIN	Energization status of 24VDC input of DCIN connector	Green	Lit	Not lit	Lit when a current is applied.

[LED: FCU8-DX651]

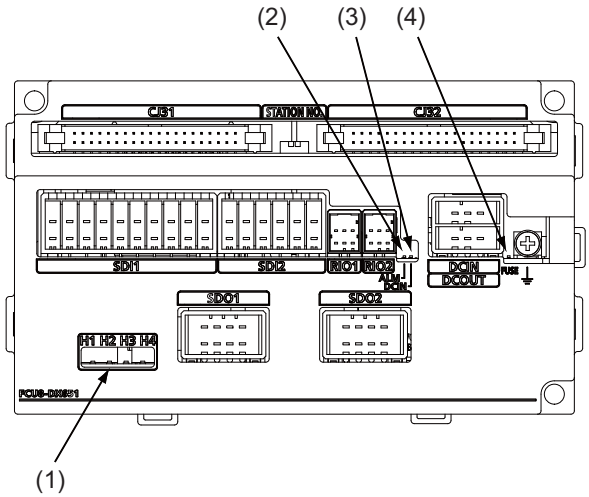

No.	Name	Function	Color	State		Supplement
				Normal	At fault	
(1)	H1	Safety relay output SYR00 status	Green	Lit	Not lit	Not lit when a relay has been blown out.
	H2	Safety relay output SYR01 status	Green	Lit	Not lit	Not lit when a relay has been blown out.
	H3	Safety relay output SYR02 status	Green	Lit	Not lit	Not lit when a relay has been blown out.
	H4	Safety relay output SYR03 status	Green	Lit	Not lit	Not lit when a relay has been blown out.
(2)	ALM	RIO communication error	Red	Not lit	Lit	Lit when RIO communication error has occurred.
(3)	DCIN	Energization status of 24VDC input of DCIN connector	Green	Lit	Not lit	Lit when a current is applied.
(4)	FUSE	Fuse status	Green	Lit	Not lit	Not lit when a fuse has been blown out.

1.4.5 Laser I/F Unit

■FCU8-DX522-001

[LED]

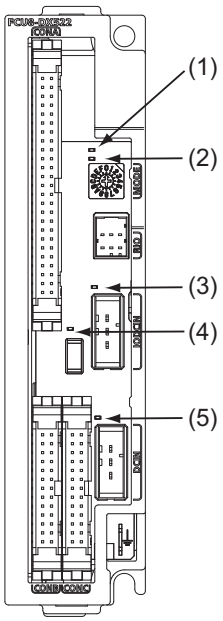

No.	Name	Function	Color	Status		Details
				Normal	At fault	
(1)	READY	Communication status with control unit	Green	Lit	Not lit	Not lit when a communication error has occurred.
(2)	ERROR	Error status	Red	Not lit	Lit	Lit when an error has occurred.
(3)	IO24VIN	Energization status of 24 VDC input of IODCIN connector	Green	Lit	Not lit	Lit when a current is applied.
(4)	FUSE	Fuse status	Green	Lit	Not lit	Not lit when a fuse has been blown out.
(5)	24VIN	Energization status of 24 VDC input of DCIN connector	Green	Lit	Not lit	Lit when a current is applied.

1.4.6 Function Expansion Unit

1.4.6.1 CC-Link Expansion Unit

■FCU8-EX561

[LED]

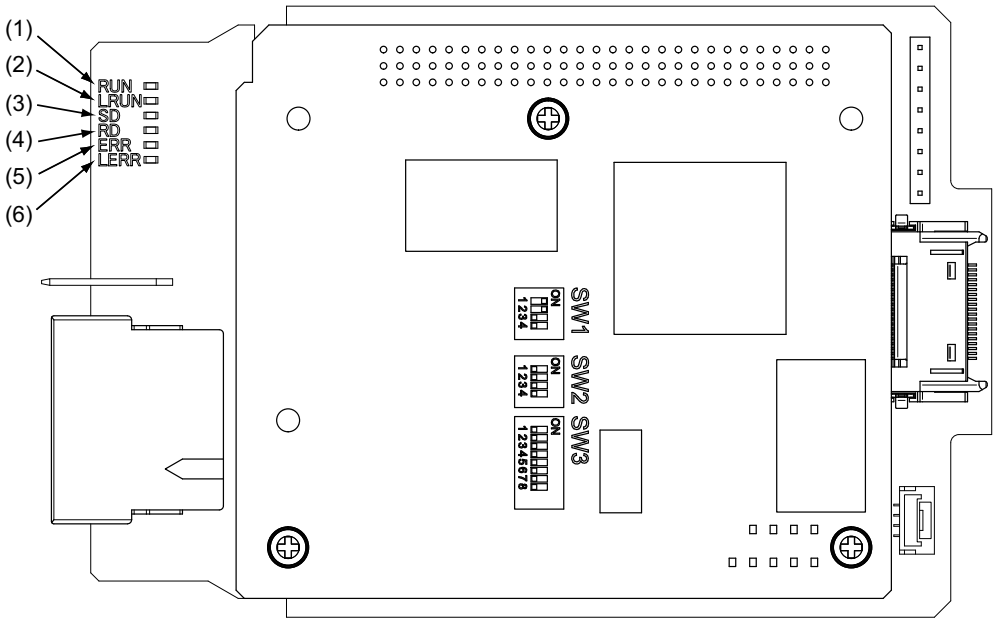

No.	Name	Color	State	Details
(1)	RUN	Green	Lit	CC-Link module in the normal state
			Not lit	Watchdog timer error
(2)	LRUN	Green	Lit	Data link in process of execution
(3)	SD	Green	Lit	During data transmission
(4)	RD	Green	Lit	During data reception
(5)	ERR	Red	Lit	Switch setting error (LERR is also lit), overlapping of master, parameter error, communication error
			Flashing	Other station data link error (when it is master station.)
(6)	LERR	Red	Lit	Data link communication error
			Flashing	Station and mode change during operation

Note

(1) All LED (RUN, LRUN, SD, RD, ERR, LERR) are lit during resetting of the CC-Link module.

1.4.6.2 PROFIBUS-DP Expansion Unit

■FCU8-EX563

[LED]

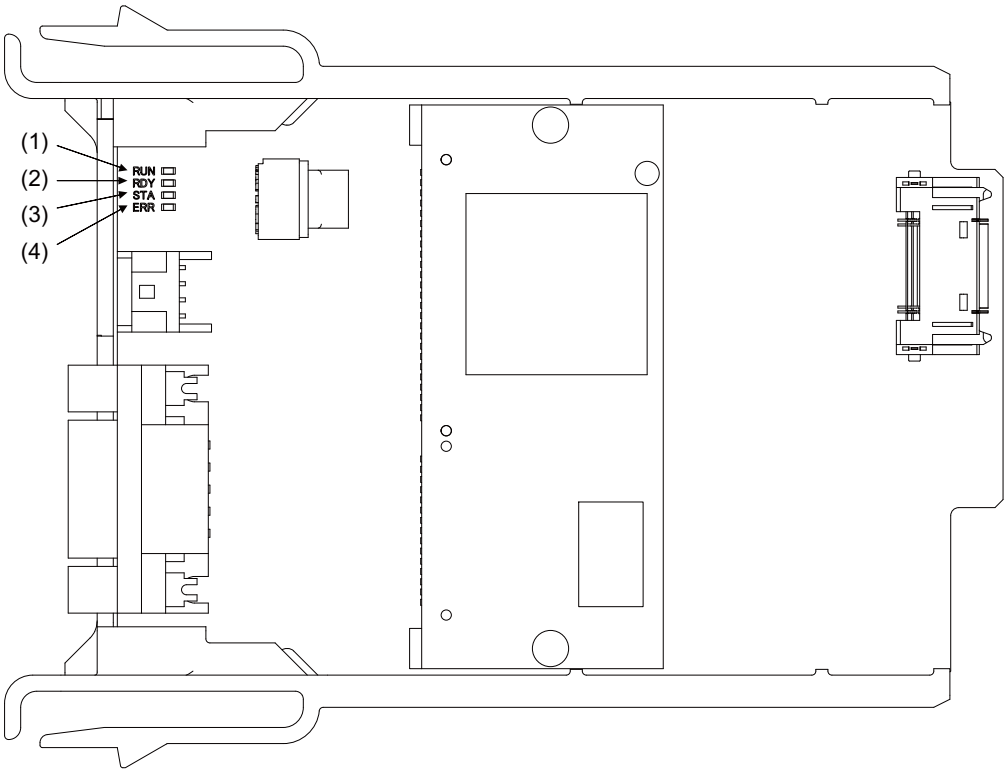

Name	Color	State	Details
(1) RUN (Green)	Green	Lit	Lit when PROFIBUS-DP module is normally operated.
(2) RDY (Yellow)	Green/yellow	Flashing	Boot standby
(Module status)	Yellow	Lit	Boot error
	-	Lit	No power supply, module failure
(3) STA (Green)	Green	Lit regularly	Configuration successful, communication unestablished
(4) ERR (Red)	Green	Lit randomly	Configuration failure, stuck error
(Communication status)	Green	Lit	Communicating with slave(s)
	Red	Flashing	Communication is interrupted with at least one slave.
	Red	Lit	Communication is interrupted with all the slaves.

Note

(1) All LED (RUN, RDY, STA and ERR) are lit during the reset of PROFIBUS-DP module.

(2) The status of PROFIBUS-DP module is displayed by the combination of RUN/RDY.

(3) The status of PROFIBUS-DP communication is displayed by the combination of STA/ERR.

1.4.6.3 CC-Link IE Field

■FCU8-EX564

[LED]

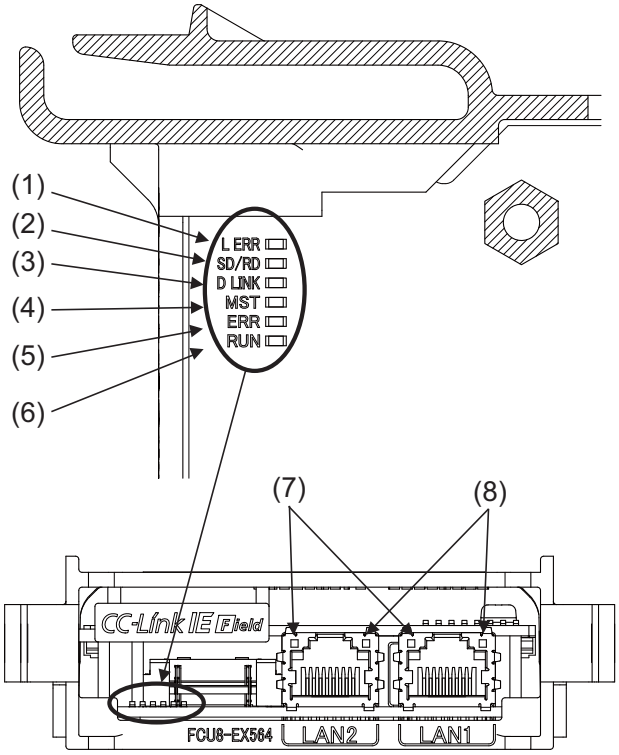

No.	Name	Color	State	Details
(1)	L ERR	Red	Not lit	Normal data received and loopback not performed
			Lit	Abnormal data received or loopback being performed
(2)	SD/RD	Green	Lit	Data being sent or received
			Not lit	Data not sent nor received
(3)	D LINK	Green	Lit	Data link (cyclic transmission being performed)
			Flashing	Data link (cyclic transmission stopped)
			Not lit	Data link not performed (disconnected)
(4)	MST	Green	Lit	Operating as master station
			Not lit	Operating as local station
(5)	ERR	Red	Not lit	Normal operation
			Flashing (500 ms interval)	A data link faulty station detected
			Flashing (200 ms interval)	Failure occurring
			Lit	Error in all stations detected or occurring
(6)	RUN	Green	Lit	Hardware running normally
			Not lit	Hardware error occurring
(7)	LINK	Green	Lit	Link-up
			Not lit	Link-down
(8)	L ER	Red	Lit	Normal data received and loopback not performed
			Not lit	Abnormal data received or loopback being performed

1.4.6.4 EtherNet/IP

■FCU8-EX565

[LED]

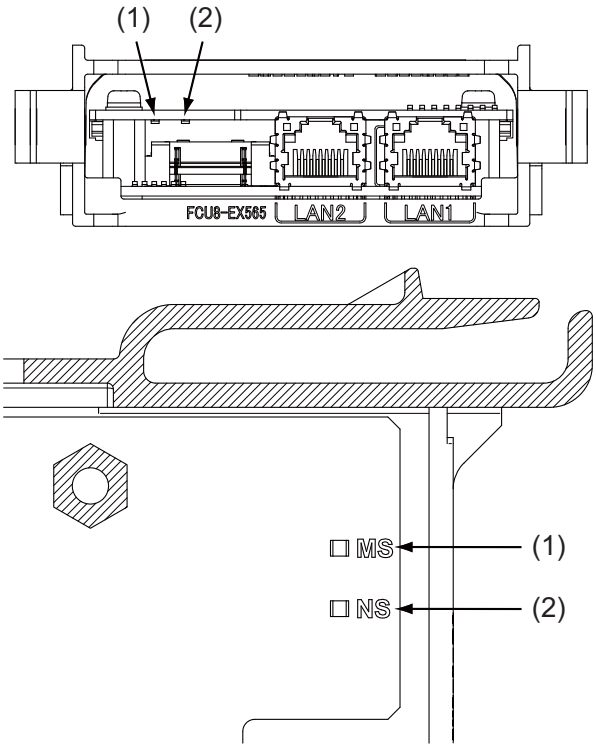

Name	Greed LED	Red LED	Details
(1) MS (Green/Red) (Module status)	Flashing	Flashing	In self-test
	Flashing	Not lit	Waiting for initialization
	Lit	Not lit	Normal operation
	Not lit	Flashing	Recoverable failure
	Not lit	Lit	Unrecoverable failure (The hardware needs to be replaced.)
(2) NS (Green/Red) (Communication status)	Flashing green/red(alternately)		In self-diagnosis
	Not lit	Not lit	No IP address
	Flashing	Not lit	No connection
	Lit	Not lit	Normal operation
	Not lit	Flashing	Connection time out
	Not lit	Lit	IP address duplication

Note

(1) Ignore LED which is not written in the table above.

1.4.6.5 FL-net

■FCU8-EX568

[LED]

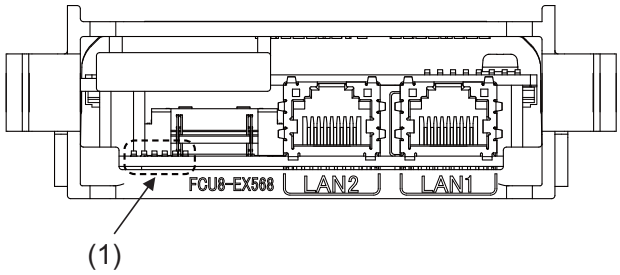

Note

(1) Ignore LED of FCU8-EX568. (For MITSUBISHI use)

1.4.7 7-segment LEDs on the Control Unit

The 7-segment LEDs mounted on the control unit can display NC status.
When alarms occur, an alarm with the highest priority within each part system is displayed.

Note

(1) When the LED (ERR) of the control unit is lit (red), the H/W is not operating properly. At this time, ignore the 7-segment LED display.

1.4.7.1 Normal State Display

In normal state, the 7-segment LEDs display in flashing.

1.4.7.2 Error Display at NC Startup

If an error occurs at NC start up, the 7-segment LEDs change as follows.

The state of sub CPU (NCLD2) is displayed on the left and that of the main CPU (NCLD1) is displayed on the right by two 7-segment LEDs.
Take a note of the displayed contents and contact the Service Center.

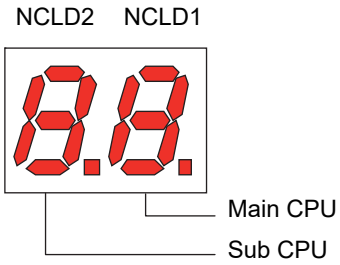

LED display	Cause
E	Undefined interruption occurred
F	Bus error, address error or interrupt exception (ASIC)
d	Memory test error in DRAM
U	Unsupported H/W
A	CRC check error occurred (Boot ROM, FROM entry, OS, EEPROM)
C	Sequence error occurred at OS startup
G	Initialization error in graphic controller
. (Period)	No correct boot data in flash ROM

(cf) In case of SRAM clear, the 7-segment LEDs change as follows. (RSW2: "C")

LED display	Cause
y	Memory test pass in SRAM
c	Memory test error in SRAM

1.4.7.3 Display when an Alarm Occurs

If an alarm occurs, these LEDs show both the occurrence and the meaning of the alarm in two stages.

At first, AL flashes three times. In case of stop code, C.F is shown instead.

Then, the meaning of the alarm is indicated in three different stages.

[Transition of 7-segment LED display]

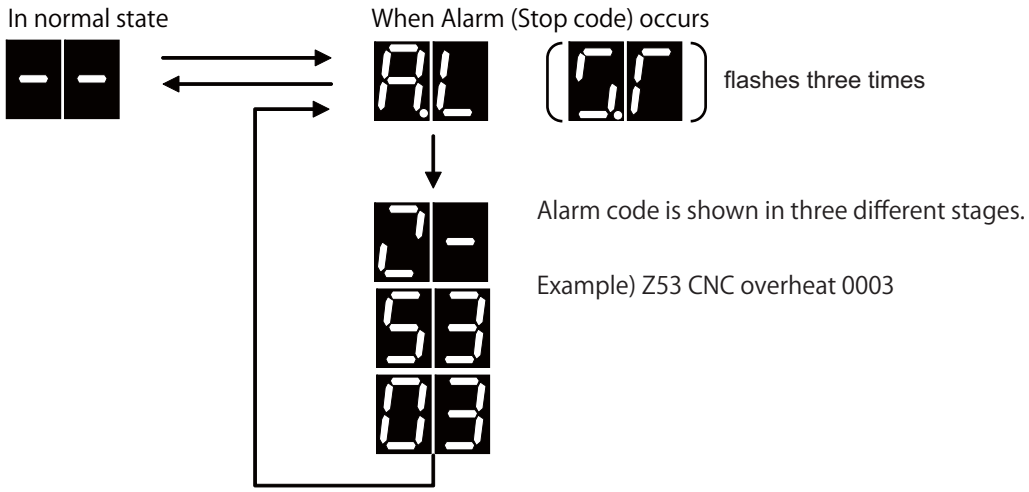

[Example of alarm display for 2-part systems]

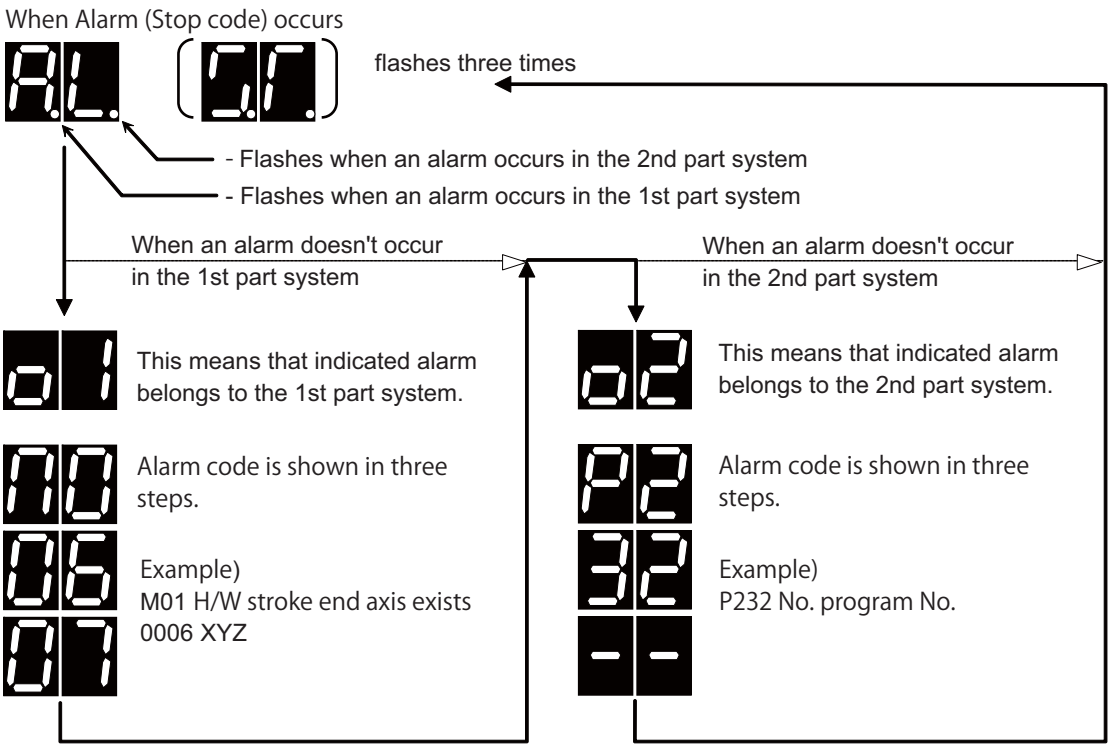

Note

(1) When only any of the following alarms occur, LED shows the normal indication.

- Emergency stop EXIN
- Emergency stop WAIT
- M01 Cutting block start interlock 0110
- M01 In synchronous correction mode 0120

[Display of the 7-segment LEDs and their meanings]

Alarm code for the first time Left side LED	Alarm/warning
	Operation error
	Stop code
	Emergency stop
	Program error
	System alarm/waring
	MCP alarm/waring
	Servo alarm/waring

■**Example of alarm display (Operation error)**

<table>
<tr><th colspan="6" rowspan="2">Alarm/Warning code</th><th colspan="6">Displays of 7-segment LEDs (transition)</th></tr>
<tr><th>1L</th><th>1R</th><th>2L</th><th>2R</th><th>3L</th><th>3R</th></tr>
<tr><td colspan="4">M01 H/W stroke end axis exists</td><td>0006</td><td>XYZ</td><td rowspan="3"> </td></tr>
<tr><td>1L</td><td>1R</td><td>2L</td><td>2R</td><td>3L</td><td>3R</td></tr>
<tr><td>Operation error</td><td colspan="3">Error # (lower 3 digits)</td><td colspan="2">Axis bit</td></tr>
<tr><td colspan="4">M01 No operation mode</td><td colspan="2">0101</td><td rowspan="3"> </td></tr>
<tr><td>1L</td><td>1R</td><td>2L</td><td>2R</td><td>3L</td><td>3R</td></tr>
<tr><td>Operation error</td><td colspan="3">Error # (lower 3 digits)</td><td colspan="2">No meaning</td></tr>
<tr><td colspan="4">M00 Aux ax R ret invld at ini</td><td>0025</td><td>0004</td><td rowspan="3"> </td></tr>
<tr><td>1L</td><td>1R</td><td>2L</td><td>2R</td><td>3L</td><td>3R</td></tr>
<tr><td>Auxiliary axis operation error</td><td colspan="3">Error # (lower 3 digits)</td><td colspan="2">Axis bit</td></tr>
<tr><td colspan="4">M01 Aux ax handle ratio too large</td><td>0060</td><td>0002</td><td rowspan="3"> </td></tr>
<tr><td>1L</td><td>1R</td><td>2L</td><td>2R</td><td>3L</td><td>3R</td></tr>
<tr><td>Auxiliary axis operation error</td><td colspan="3">Error # (lower 3 digits)</td><td colspan="2">Axis bit</td></tr>
<tr><td colspan="6">M90 Parameter set mode</td><td rowspan="3"> </td></tr>
<tr><td>1L</td><td>1R</td><td>2L</td><td>2R</td><td>3L</td><td>3R</td></tr>
<tr><td colspan="4">Parameter can be set</td><td colspan="2">No meaning</td></tr>
<tr><td colspan="4">M50 Multiple key inputs invalid</td><td>5002</td><td>0001</td><td rowspan="3"> </td></tr>
<tr><td>1L</td><td>1R</td><td>2L</td><td>2R</td><td>3L</td><td>3R</td></tr>
<tr><td>Operation error</td><td colspan="3">Error # (lower 3 digits)</td><td colspan="2">Key code (e.g.)</td></tr>
</table>

Note

(1) Axis bit of the spindle in which the operation error has occurred is not displayed.

(2) Since the following alarms are displayed in the same state by the LEDs, it is difficult to distinguish them. Check the details for each alarm on the diagnosis screen.

- "0001 to 0099" and "1000 to 1099" of [M01 Operation error]
- "0100 to 0199" and "1100 to 1199" of [M01 Operation error]
- [M01 Operation error], [M00 Auxiliary axis operation error] and [M01 Auxiliary axis operation error]
- "0002" of [M01 Operation error] and "5002" of [M50 Operation warning]

■Example of alarm display (Stop code)

Alarm/Warning code						Displays of 7-segment LEDs (transition)
						1L 1R 2L 2R 3L 3R
T01 H/W stroke end axis exists				0105		
1L	1R	2L	2R	3L	3R	
Stop code		Error # (lower 2 digits)		No meaning		
T02 S/W stroke end axis exists				0202		
1L	1R	2L	2R	3L	3R	
Stop code		Error # (lower 2 digits)		No meaning		
T03 Single block stop signal ON				0301		
1L	1R	2L	2R	3L	3R	
Stop code		Error # (lower 2 digits)		No meaning		
T04 Collation stop				0401		
1L	1R	2L	2R	3L	3R	
Stop code		Error # (lower 2 digits)		No meaning		
T10 Fin wait				0001		
1L	1R	2L	2R	3L	3R	
Stop code		Error # (lower 2 digits)		No meaning		

Note

(1) Among the causes of [T10 Fin wait], "In dwell execution" and "Unclamp signal wait" is not indicated.

■Example of alarm display (Emergency stop)

Alarm/Warning code						Displays of 7-segment LED (transition)
						1L 1R 2L 2R 3L 3R
EMG Emergency stop				STOP		
1L	1R	2L	2R	3L	3R	
Emergency stop		R69 (upper 2 digits)		R69 (lower 2 digits)		

■Example of alarm display (Program error)

Alarm/Warning code						Displays of 7-segment LED (transition)
						1L 1R 2L 2R 3L 3R
P273 Macro call nesting over						
1L		1R	2L	2R	3L	3R
Program error		Error #			No meaning	

■**Example of alarm display (System alarm)**

Alarm/Warning code						Displays of 7-segment LED (transition)
						1L 1R 2L 2R 3L 3R
Z70 Abs posn base set incomplete				0001	X	
1L	1R	2L	2R	3L	3R	
Absolute position data error		Error #		Axis bit		
Z71 Abs encoder failure				0002	X	
1L	1R	2L	2R	3L	3R	
Encoder failure		Error #		Axis bit		
Z72 Position check error				0001	Z	
1L	1R	2L	2R	3L	3R	
Position check error		Error #		Axis bit		
Z73 Absolute position data warning				0003	XYZ	
1L	1R	2L	2R	3L	3R	
Absolute position data warning		Error #		Axis bit		
Z70 Aux ax abs position error				0001	0001	
1L	1R	2L	2R	3L	3R	
Auxiliary axis absolute position error		Error #		Axis bit		
Z71 Aux ax drop voltage				0001	0001	
1L	1R	2L	2R	3L	3R	
Auxiliary axis voltage drop		Error #		Axis bit		
Z73 Aux ax system warning				0001	0001	
1L	1R	2L	2R	3L	3R	
Auxiliary axis system warning		Error #		Axis bit		
Z40 Format mismatch						
1L	1R	2L	2R	3L	3R	
Format mismatch		No meaning				

Note

(1) Since the following alarms are displayed in the same state by the LEDs, it is difficult to distinguish them. Check the details for each alarm on the diagnosis screen.

- "0001" and "0101" of [Z70 Abs data error]

■**Example of alarm display (System warning)**

Alarm/Warning code						Displays of 7-segment LED (transition)
						1L 1R 2L 2R 3L 3R
Z51 E2PROM error				0011		
1L	1R	2L	2R	3L	3R	
System warning		Warning code		Type		
Z52 Battery fault				0001		
1L	1R	2L	2R	3L	3R	
System warning		Warning code		No meaning		
Z53 CNC overheat				0003		
1L	1R	2L	2R	3L	3R	
System warning		Warning code		Unit bit		
Z55 RIO communication stop				0007		
1L	1R	2L	2R	3L	3R	
System warning		Warning code		Unit bit		
Z57 System warning				0010		
1L	1R	2L	2R	3L	3R	
System warning		Warning code		Type		
Z58 ROM write not completed						
1L	1R	2L	2R	3L	3R	
System warning		Warning code		No meaning		
Z59 Acc/dec time cnst too large						
1L	1R	2L	2R	3L	3R	
System warning		Warning code		No meaning		

Note

(1) Remote I/O 2nd part system and Remote I/O 3rd part system is not displayed in the case of [Z55 RIO communication stop].

■**Example of alarm display (MCP alarm)**

Alarm/Warning code						Displays of 7-segment LEDs (transition)
						1L 1R 2L 2R 3L 3R
Y02 SV commu er				0051	0004	
1L	1R	2L	2R	3L	3R	
System alarm		Error # (lower 2 digits)		Error code		
Y03 Drive unit unequipped				XYZS		
1L	1R	2L	2R	3L	3R	
Drive unit unequipped		Axis bit		No meaning		
Y05 Initial parameter error				1039		
1L	1R	2L	2R	3L	3R	
Initial parameter error		Parameter # (lower 2 digits)		No meaning		
Y06 mcp_no setting error						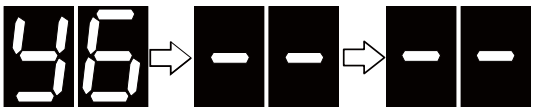
1L	1R	2L	2R	3L	3R	
mcp_no setting error		No meaning		No meaning		
Y02 Aux ax system alarm				0051	0004	
1L	1R	2L	2R	3L	3R	
mcp_no setting error		No meaning		No meaning		
Y03 Aux ax drive unit unequipped				0001		
1L	1R	2L	2R	3L	3R	
mcp_no setting error		No meaning		No meaning		

Note

(1) Axis bit of the spindle in which the operation error has occurred is not displayed.

(2) The data ID error or the axis No. of the received frame No. error for [Y02 System alarm 0051] or [Y02 Aux ax system alarm 0051] is not displayed.

■**Example of alarm display (MCP warning)**

Alarm/Warning code						Displays of 7-segment LED (transition)
						1L 1R 2L 2R 3L 3R
Y51 Parameter stapt1-4 illegal				0012	Z	
1L	1R	2L	2R	3L	3R	
Parameter error		Error # (lower 2 digits)		Axis bit		
Y90 No spindle signal				0003		
1L	1R	2L	2R	3L	3R	
No spindle signal		Open-phase bit		No meaning		

Note

(1) Axis bit of the spindle in which the operation error has occurred is not displayed.

■**Example of alarm display (Servo alarm)**

Alarm/Warning code						Displays of 7-segment LED (transition)
						1L 1R 2L 2R 3L 3R
S01 Servo alarm: PR				0031	X	
1L	1R	2L	2R	3L	3R	
Servo alarm: PR		Error # (lower 2 digits)		Axis bit		
S02 Initial parameter error				3225	S	
1L	1R	2L	2R	3L	3R	
Initial parameter error		Error # (lower 2 digits)		Axis bit		
S03 Servo alarm: NR				0052	Y	
1L	1R	2L	2R	3L	3R	
Servo alarm: NR		Error # (lower 2 digits)		Axis bit		
S04 Servo alarm: AR				006F	Y	
1L	1R	2L	2R	3L	3R	
Servo alarm: AR		Error # (lower 2 digits)		Axis bit		
S01 Aux ax servo alarm				0016	0004	
1L	1R	2L	2R	3L	3R	
Auxiliary axis servo alarm		Error # (lower 2 digits)		Axis bit		
S02 Aux ax servo alarm				0020	0001	
1L	1R	2L	2R	3L	3R	
Auxiliary axis servo alarm		Error # (lower 2 digits)		Axis bit		
S02 Aux ax servo alarm				0031	0002	
1L	1R	2L	2R	3L	3R	
Servo alarm: NR		Error # (lower 2 digits)		Axis bit		

Note

(1) Axis bit of the spindle in which the operation error has occurred is not displayed.

■**Example of alarm display (Servo warning)**

<table>
<tr><th colspan="6">Alarm/Warning code</th><th>Displays of 7-segment LED (transition)</th></tr>
<tr><td colspan="6">S51 Parameter error 2205 Z</td><td rowspan="3"> </td></tr>
<tr><td>1L</td><td>1R</td><td>2L</td><td>2R</td><td>3L</td><td>3R</td></tr>
<tr><td colspan="2">Parameter error</td><td colspan="2">Error # (lower 2 digits)</td><td colspan="2">Axis bit</td></tr>
<tr><td colspan="6">S52 Servo warning E0 X</td><td rowspan="3"> </td></tr>
<tr><td>1L</td><td>1R</td><td>2L</td><td>2R</td><td>3L</td><td>3R</td></tr>
<tr><td colspan="2">Servo warning</td><td colspan="2">Error #</td><td colspan="2">Axis bit</td></tr>
<tr><td colspan="6">S52 Aux ax servo warning 0092 0001</td><td rowspan="3"> </td></tr>
<tr><td>1L</td><td>1R</td><td>2L</td><td>2R</td><td>3L</td><td>3R</td></tr>
<tr><td colspan="2">Servo warning</td><td colspan="2">Error #</td><td colspan="2">Axis bit</td></tr>
</table>

Note

(1) Axis bit of the spindle in which the operation error has occurred is not displayed.

(2) Only the lower 2 digits of the parameter number are shown for [S51 Parameter error].

(3) Since the following alarms are displayed in the same state by the LEDs, it is difficult to distinguish them. Check the details for each alarm on the diagnosis screen.

- [S52 Servo warning] and [S52 Aux ax servo warning]

2

Daily Maintenance and Periodic Maintenance

Maintenance is categorized into daily maintenance items (items to be carried at set intervals) and periodic maintenance items (replacement of parts when life is reached).
Some parts may not function in a hardware manner when the life is reached, so these should be replaced before the life is reached.

For details of the inspection and maintenance of the drive section, refer to the instruction manuals for each drive unit.

Class	Name	Life	Inspection/replacement
Daily maintenance	Touchscreen		Accordingly (when poor sensitive or dirty)
	Escutcheon (display unit area, keyboard etc.)		Once/two months (Accordingly when dirty)
Periodic maintenance	Battery (lithium battery)	Cumulative data holding time: 45,000 hours	When battery voltage drop caution alarm occurs (Guideline: approx. 5 years)

Note

(1) Replace the battery within one month after the alarm "Z52 Battery fault 0001" appears on the NC screen.
(2) The internal data may have been damaged if the alarm "Z52 Battery fault 0003" appears.

2.1 Daily Maintenance

2.1.1 Touchscreen

> **⚠ CAUTION**
>
> **Always keep the touchscreen surface clean. When it gets dirty, remove the dirt immediately. Do not perform any operation on the dirty touchscreen.**

(1) Cleaning the touchscreen

- When metal powder or sand dust is on the touchscreen, remove it to prevent the scratches.
- Wipe the screen gently with a soft and clean cloth.

(2) Precautions for use

- The touchscreen may become poor sensitive or even may not react when it gets dirty.
- Operate the touchscreen with fingers. The touchscreen does not react with nails.
- The use of gloves, work gloves, etc. has effects such as the deterioration of the operation feeling depending on the material and thickness of the gloves.
- The polarizing plate (display surface) of the touchscreen surface can be easily scratched, so be careful during handling.
- Glass is used in the touchscreen. Be careful not to drop the touchscreen or allow it to hit hard objects, as the glass may chip or break.
- The polarizing plate may be stained or discolored if drops of water, etc., adhere to it for long periods, so be sure to wipe off any moisture immediately.
- Wipe off any dirt, dust, etc., on the polarizing plate using absorbent cotton or other soft cloth.
- Electronic parts are used in the touchscreen, so be careful of static electricity when handling.
- Never disassemble the Touchscreen. Doing so will damage the panel.

(3) Precautions for storage

- Do not store the card in locations having a high temperature or humidity. (Store within the storage temperature range.)
- When storing the touchscreen as an individual unit, be sure that other objects do not touch or hit the polarizing plate (display surface).
- When storing the touchscreen for long periods, be sure to store in a dark place away from exposure to direct sunlight or fluorescent light.

2.1.2 Escutcheon

■Cleaning the escutcheon

(1) Prepare the rear side of the escutcheon to clean.

(2) Wipe the escutcheon with a soft, clean, dry cloth. If cleaning is still required, put some neutral detergent on a cloth and wipe. Do not use alcohol, thinner, etc.

2.2 Periodic Maintenance

2.2.1 List of Durable Parts

Durable parts	Part type
Battery for control unit	Q6BAT BKO-C10811H03
Battery for personal computer unit	Q6BAT BKO-C10811H03
Personal computer unit cooling fan	109P0424H3013

(*) Contact the Service Center, Sales Office or dealer for repairs or part replacement.

2.2.2 List of Replacing Parts

Replacing parts	Part type	Manufacturer
Protection fuse for operation panel I/O	LM50	Daito Communication Apparatus Co., Ltd.
Protection fuse for FCU8-DX220/230/231	LM50	Daito Communication Apparatus Co., Ltd.
Protection fuse for FCU8-DX213/654/213-1/654-1	MP63	Daito Communication Apparatus Co., Ltd.
Protection fuse for FCU8-DX522-001	LM50	Daito Communication Apparatus Co., Ltd.
Pair of SD/USB covers for display unit	N031C089G51	-

(*) Refer to "2.2.4 Replacing Fuse" to replace the fuse.

Note

(1) Fuse for remote I/O unit (FCU8-DX651) cannot be replaced.

2.2.3 Durable Parts Replacement

2.2.3.1 Control Unit Battery

A lithium battery in the control unit battery holder retains parameter settings, machining programs and the like, which requires to be backed up at the power OFF.

Battery	Q6BAT
Battery cumulative data holding time	45,000 hours (At 0 to 45°C; The life becomes shorter if the temperature is high.)
Battery life	Approx. 5 years (from date of battery manufacture)

■Precautions for handling battery

(1) Do not disassemble the battery.

(2) Do not place the battery in flames or water.

(3) Do not pressurize and deform the battery.

(4) This is a primary battery so do not charge it.

> **⚠ CAUTION**
>
> **Do not short-circuit, charge, overheat, incinerate or disassemble the battery.**

■Replacement procedures

(1) Check that the machine power is turned OFF. (If the power is not OFF, turn it OFF.)

(2) Confirm that the control unit LED, 7-segment display, etc., are all OFF.

(3) Open the front cover of the control unit.

(4) Remove the connector from the control unit BAT connector.

(5) Replace the old battery with the new battery in the battery holder.

(6) Insert the connector connected to the new battery into the BAT connector. Pay attention to the connector orientation: do not insert backwards.

(7) Close the front cover of the control unit. At this time, confirm that the cover is closed by listening for the "click" sound when the latch catches.

[M800VW/M80VW]

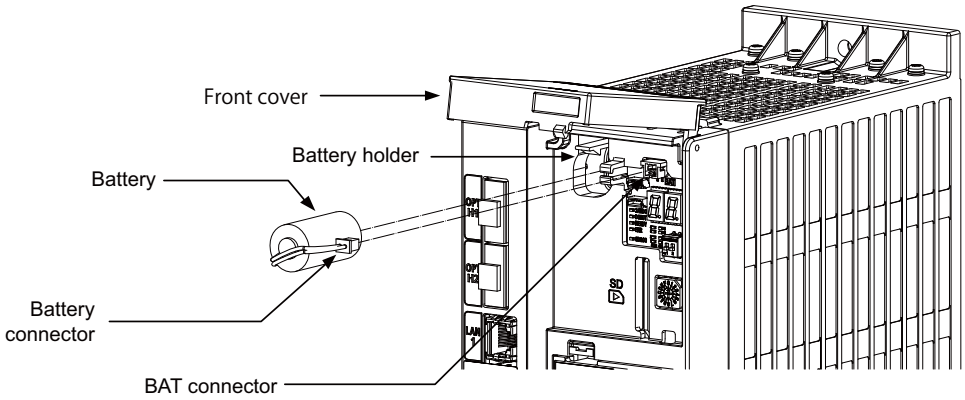

[M800VS]

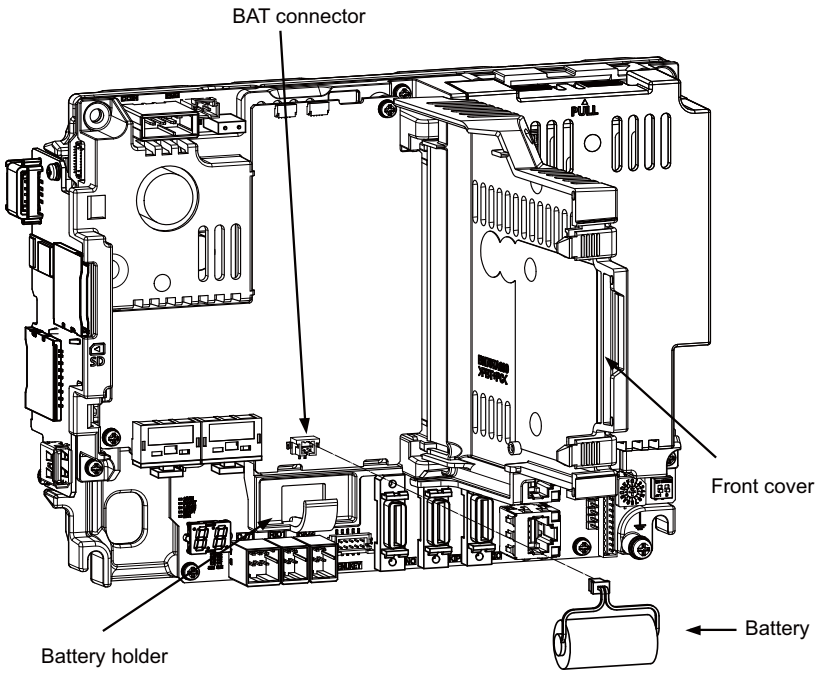

[M80V]

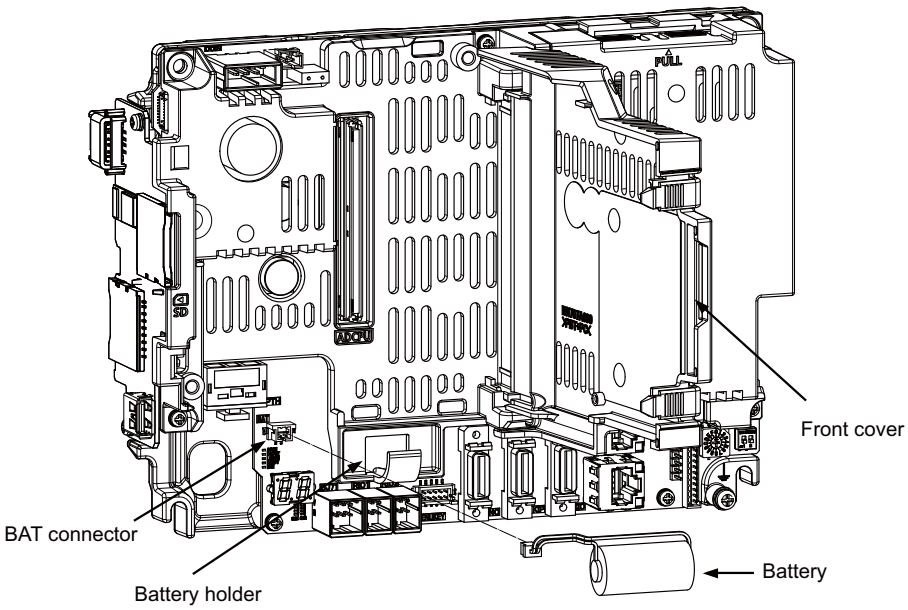

2.2.3.2 Personal Computer Unit Battery [M800VW/M80VW]

Some data of the personal computer unit are retained using its battery.
When these data cannot be retained, the unit memory will be initialized. This results to take much time to start up.

Battery	Q6BAT
Battery cumulative data holding time	45,000 hours (At 0 to 45°C; The life becomes shorter if the temperature is high.)
Battery life	Approx. 5 years (from date of battery manufacture)

■Precautions for handling battery

(1) Do not disassemble the battery.
(2) Do not place the battery in flames or water.
(3) Do not pressurize and deform the battery.
(4) This is a primary battery so do not charge it.

> **⚠ CAUTION**
>
> **Do not short-circuit, charge, overheat, incinerate or disassemble the battery.**

■Replacement procedures

(1) Check that the machine power is turned OFF. (If the power is not OFF, turn it OFF.)
(2) Open the cover of the operation panel.
(3) Disconnect the connector being connected to BAT connector of the personal computer unit.
(4) Replace the old battery in the battery holder with new one.
(5) Insert the connector of the new battery into the BAT connector. Pay attention to the connector orientation: do not forcefully insert it upside down.
(6) Confirm that there is no cabling omissions or wrong connections, and then close the cover of the operation panel.

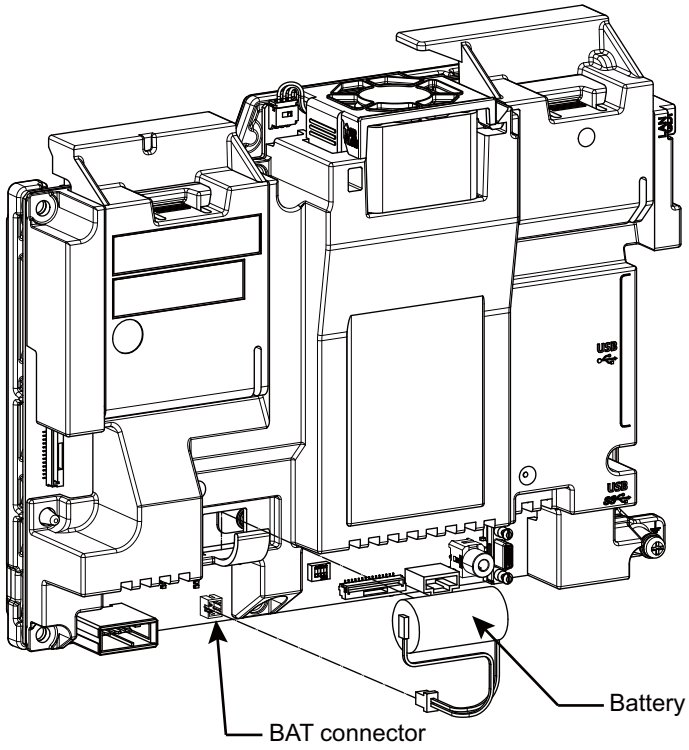

2.2.3.3 Personal Computer Unit Cooling Fan [M800VW/M80VW]

Type	109P0424H3103
Life	60,000 hours (When the rotary speed decreased 30% less than the initial values)

Note

(1) The life is estimated on the assumption that it is used under 60°C environment. Note that the value above is not a guaranteed value.

■Replacement procedures

Always replace the personal computer unit cooling fan with the machine power turned OFF.

(1) Check that the machine power is turned OFF. (If the power is not OFF, turn it OFF.)
(2) Open the operation panel door.
(3) Remove the fan cover on the personal computer unit.
(Remove the fan cover by holding down the tab on the left side surface.)
(4) Disconnect the cooling fan connector.
(5) Remove the cooling fan from the personal computer unit cooling fan housing.
(6) Replace the cooling fan with a new one. Insert the connector from the new cooling fan into the personal computer unit.
(7) Install the fan cover taking care not to pinch the cooling fan wiring with the fan cover.
(8) Confirm that all the cables are correctly connected and close the operation panel door.

[FCU8-PC232/FCU8-PC641]

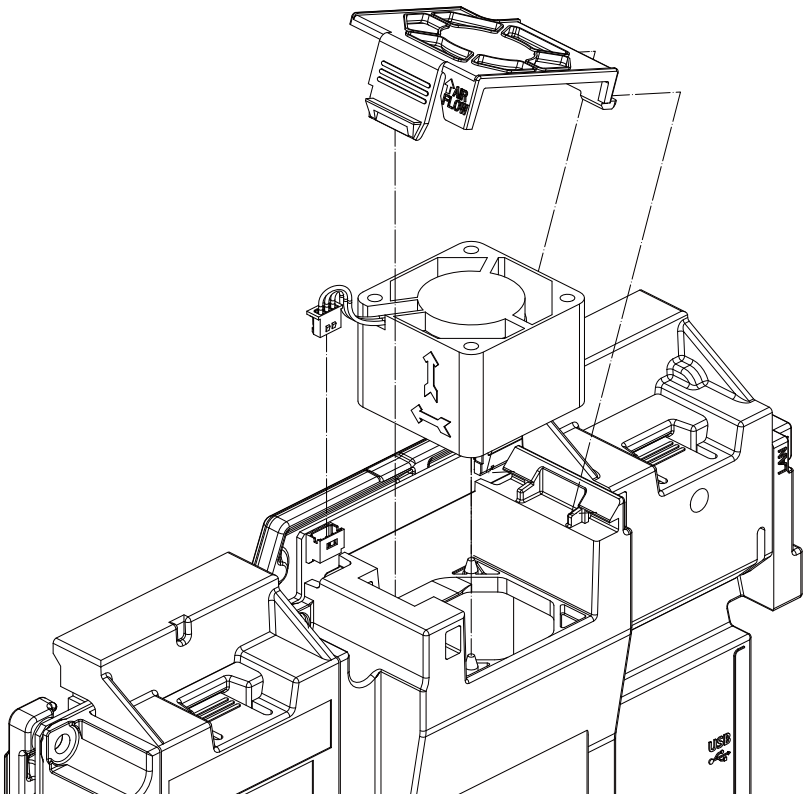

⚠ CAUTION

1. Do not replace the cooling fan while the power is ON.

2. Dispose the spent cooling fan according to the local laws.

2.2.4 Replacing Fuse

How to check for fuse blowout

■Operation panel I/O unit

When FUSE LED is not lit and DOCOMLED is lit (*1), the fuse is blown out.

FCU8-DX750/760/761

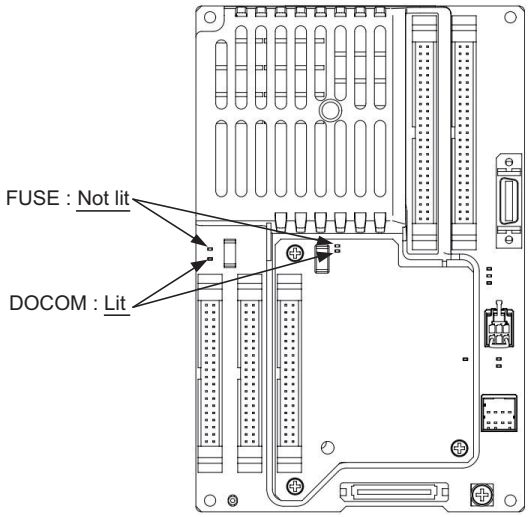

FCU8-DX830/834/837

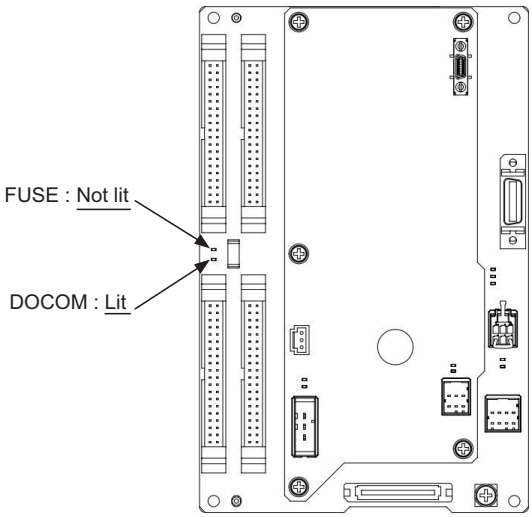

FCU8-DX731

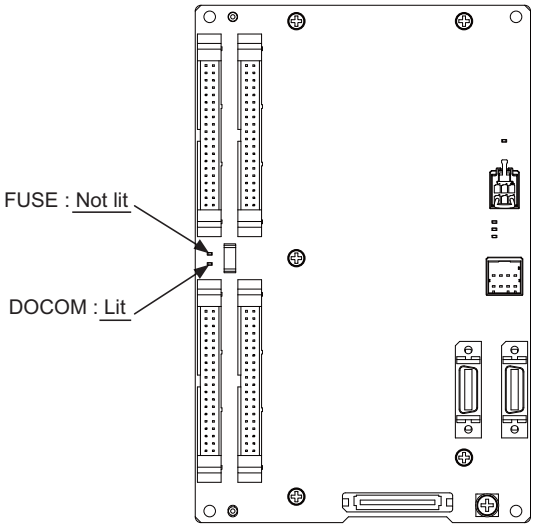

(*1) When DOCOM LED is not lit, it is considered that the power is not supplied.
Confirm that the power is correctly supplied.

■Remote I/O unit (FCU8-DX220/230/231)

When FUSE LED is not lit and 24VDCIN LED is lit (*2), the fuse is blown out.

FCU8-DX220/230/231

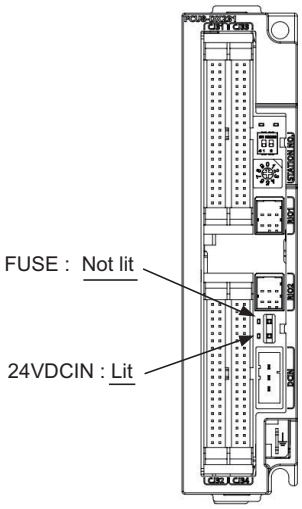

(*2) When 24VDCIN LED is not lit, it is considered that the power is not supplied.
Confirm that the power is correctly supplied.

■Remote I/O unit (FCU8-DX213/213-1/654/654-1)

When the indication window of the fuse becomes white, the fuse is blown out.

FCU8-DX213/213-1/654/654-1

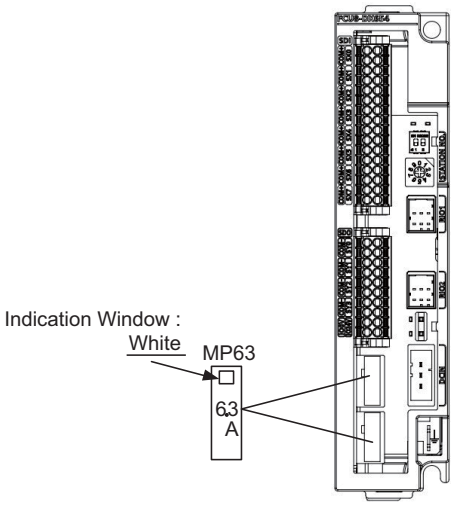

Replacement procedures for fuse

(1) Turn OFF the machine.

(2) Remove the fuse using tweezers, etc. and then replace it with a new fuse.

FCU8-DX750/760/761

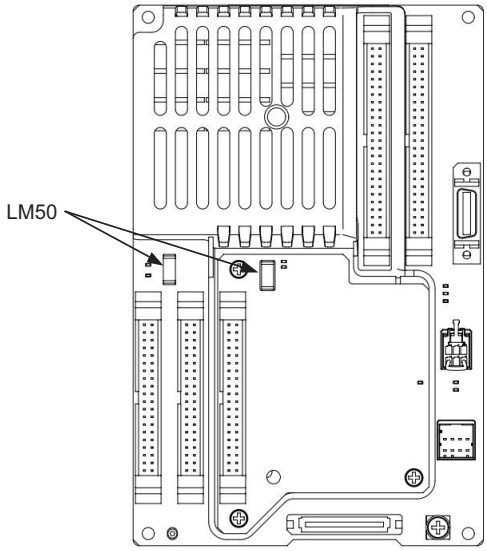

FCU8-DX830/834/837

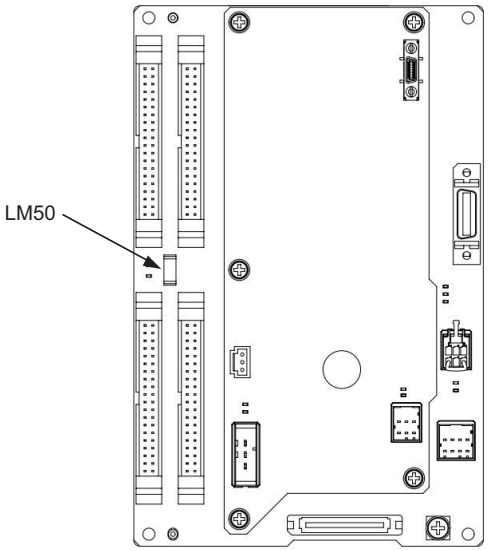

FCU8-DX731

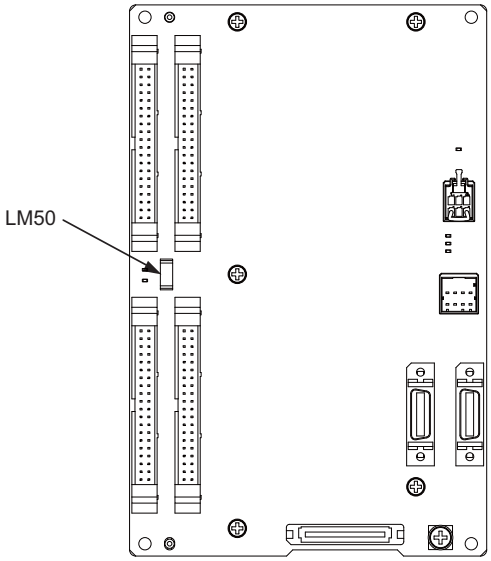

FCU8-DX220/230/231

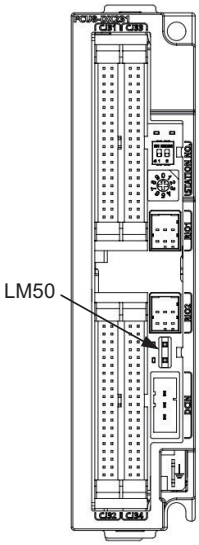

FCU8-DX213/213-1/654/654-1

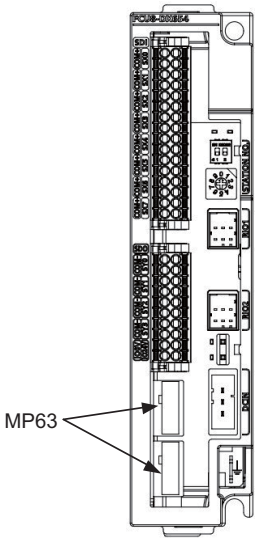

3

Maintenance of the Drive Unit

⚠ WARNING

1. Before starting maintenance or inspections, turn the main circuit power and control power both OFF. Wait at least fifteen minutes until the CHARGE lamp turns OFF, and then confirm that the input and output voltage are zero using a tester, etc. Failure to observe this could lead to electric shocks.

2. Inspections must be carried out by a qualified technician. Failure to observe this could lead to electric shocks. Contact your nearest Mitsubishi branch or dealer for repairs and part replacement.

⚠ CAUTION

1. Never perform a megger test (measure the insulation resistance) of the drive unit. Failure to observe this could lead to faults.

2. The user must never disassemble or modify this product.

3.1 Periodic Inspections

The following periodic inspections are recommended to be done.

(1) Check that any of the screws on the terminal block is not loose. When there is a loose screw, tighten it.

(2) Check that any abnormal noise is not heard from the servo motor bearings or brake section.

(3) Check that any of the cables is not damaged or cracked. Inspect the cables periodically according to the working condition, especially when the cables move along with the machine.

(4) Check the load coupling shaft for misalignment.

3.2 Durable Parts

A guide to the part replacement cycle is shown below. Note that these will differ according to the working conditions or environmental conditions, so replace the parts if any abnormality is found. Contact Mitsubishi branch or your dealer for repairs or part replacements.

[MDS-E/EH Series]

Part name		Standard replacement time	Remarks
Servo drive unit	Smoothing capacitor	10 years	The standard replacement time is a reference. Even if the standard replacement time is not reached, the part must be replaced if any abnormality is found.
	Cooling fan	10,000 to 30,000 hours (2 to 3 years)	
	Battery	10,000 hours (for MDS-BAT6V1SET, MDSBTBOX-LR2060)	
Servo motor	Bearings	20,000 to 30,000 hours	
	Encoder	20,000 to 30,000 hours	
	Oil seal, V-ring	5,000 hours	

[MDS-EJ/EJH Series]

Part name		Standard replacement time	Remarks
Servo drive unit	Smoothing capacitor	10 years	The standard replacement time is a reference. Even if the standard replacement time is not reached, the part must be replaced if any abnormality is found.
	Cooling fan	10,000 to 30,000 hours (2 to 3 years)	
	Battery	10,000 hours (for MR-BAT6V1SET, MDSBTBOXLR2060)	
Servo motor	Bearings	20,000 to 30,000 hours	
	Encoder	20,000 to 30,000 hours	
	Oil seal, V-ring	5,000 hours	

[MDS-EM/EMH Series]

Part name		Standard replacement time	Remarks
Servo drive unit	Smoothing capacitor	10 years	The standard replacement time is a reference. Even if the standard replacement time is not reached, the part must be replaced if any abnormality is found.
	Cooling fan	10,000 to 30,000 hours (2 to 3 years)	
	Battery	10,000 hours (for MR-BAT6V1SET, MDSBTBOX-LR2060)	
Servo motor	Bearings	20,000 to 30,000 hours	
	Encoder	20,000 to 30,000 hours	
	Oil seal, V-ring	5,000 hours	

(1) Power smoothing capacitor:

The characteristics of the power smoothing capacitor will deteriorate due to the effect of ripple currents, etc. The capacitor life is greatly affected by the ambient temperature and working conditions. However, when used continuously in a normal air-conditioned environment, (ambient temperature is an average of 40°C or less) the service life will be ten years.

(2) Relays:

Contact faults will occur due to contact wear caused by the switching current. The service life will be reached after 100,000 cumulative switches (switching life) although this will differ according to the power capacity.

(3) Servo motor bearings:

The motor bearings should be replaced after 20,000 to 30,000 hours of rated load operation at the rated speed. This will be affected by the operation state, but the bearings must be replaced when any abnormal noise or vibration is found in the inspections.

(4) Servo motor oil seal, V-ring:

These parts should be replaced after 5,000 hours of operation at the rated speed. This will be affected by the operation state, but these parts must be replaced if oil leaks, etc., are found in the inspections.

3.3 Adding and Replacing Units and Parts

⚠ CAUTION

1. Correctly transport the product according to its weight. Failure to observe this could result in injury.

2. Do not stack the product above the indicated limit.

3. Installation directly on or near combustible materials could result in fires.

4. Install the unit in a place which can withstand its weight.

5. Do not get on or place heavy objects on the unit. Failure to observe this could result in injury.

6. Always use the unit within the designated environment condition range.

7. Do not allow conductive foreign matter such as screws or metal chips, or combustible foreign matter such as oil enter the servo drive or servo motor.

8. Do not block the intake or exhaust ports of the servo drive of servo motor. Failure to observe this could result in faults.

9. The servo drive and servo motor are precision devices. Do not drop them or apply strong impacts.

10. Do not install or operate a servo drive or servo motor which is damaged or missing parts.

11. When the unit has been stored for a long time, contact the Service Center.

12. Connect the encoder (CN2/CN3) immediately after the installation of the servo drive unit. In addition, when a battery box is used, immediately connect to the BTA/BTB connector. (prevention of absolute position data lost)

3.3.1 MDS-E/EH Series

3.3.1.1 Replacing the Drive Unit

■Arrangement of replacing parts

Contact Mitsubishi branch or your dealer for an order or a replacement of the drive unit.
Place an order for the same type of a drive unit as the one to be replaced.

■Replacement procedure

Replace the drive unit with the following procedures.

Procedures

(1) Turn the breaker for the input power OFF. Make sure the CHARGE lamp of the power supply unit is turned OFF.
(2) Disconnect all the connectors and the wires connected to the drive unit.
(3) Remove the two (four) screws fixing the drive unit onto the control panel. Remove the drive unit from the control panel.
(4) Make a same setting for the rotary switch and the dip switch of the new drive unit as those of the uninstalled drive unit.
(5) Install a new drive unit by following the removal procedure in reverse.

■Restoration

Data backup and restoration is not required before replacing drive units because drive units' data such as parameters are stored in the controller. However, carry out a backup of the whole system before replacement as a precautionary measure. The power for keeping the encoder's position data of an absolute position system is supplied from the battery connected to the drive unit. Keep the power ON once for 30 minutes or more if possible, and make sure to complete the replacement within 60 minutes after charging the encoder's capacitor.

3.3.1.2 Replacing the Unit Fan

■Replacing parts

<MDS-E Series>

Servo drive unit			Spindle drive unit			Power supply unit		
Type MDS-E-	Fan type	Size [mm]	Type MDS-E-	Fan type	Size [mm]	Type MDS-E-	Fan type	Size [mm]
V1-20	9WF0424H603	40SQ.	SP-20	9WF0424H603	40SQ.	CV-37	-	-
V1-40			SP-40			CV-75	-	-
V1-80			SP-80			CV-110	9WF0624H604	60SQ.
V1-160			SP-160	9WF0624H604	60SQ.	CV-185		
V1-160W	9WF0624H604	60SQ.	SP-200	9WF0924H206	90SQ.	CV-300	9WF0924H206	90SQ.
V1-320	9WF0924H206	90SQ.	SP-240			CV-370		
V1-320W			SP-320			CV-450		
V2-20	9WF0424H603	40SQ.	SP-400	9WF0924H403	90SQ.	CV-550	9WF1224H105	120SQ.
V2-40			SP-640	9WF1224H105	120SQ.			
V2-80			SP2-20	9WF0424H603	40SQ.			
V2-160	9WF0624H604	60SQ.	SP2-40					
V2-160W	9WF0924H206	90SQ.	SP2-80	9WF0624H604	60SQ.			
V3-20	9WF0424H603	40SQ.	SP2-16080					
V3-40								

<MDS-EH Series>

Servo drive unit			Spindle drive unit			Power supply unit		
Type MDS-EH-	Fan type	Size [mm]	Type MDS-EH-	Fan type	Size [mm]	Type MDS-EH-	Fan type	Size [mm]
V1-10	-	-	SP-20	9WF0424H603	40SQ.	CV-37	9WF0624H604	60SQ.
V1-20	9WF0424H603	40SQ.	SP-40			CV-75		
V1-40			SP-80	9WF0624H604	60SQ.	CV-110		
V1-80			SP-100	9WF0924H206	90SQ.	CV-185		
V1-80W	9WF0624H604	60SQ.	SP-160			CV-300	9WF0924H206	90SQ.
V1-160	9WF0924H206	90SQ.	SP-200	9WF0924H403	90SQ.	CV-370		
V1-160W			SP-320			CV-450		
V1-200	9WF0924H403	90SQ.	SP-480	9WF1224H105	120SQ.	CV-550	9WF1224H105	120SQ.
V2-10	-	-	SP600			CV-750		
V2-20	9WF0424H603	40SQ.						
V2-40								
V2-80	9WF0624H604	60SQ.						
V2-80W	9WF0924H206	90SQ.						
V2-160								

POINT

When the drive unit of E/EH Series which uses two cooling fans is in an emergency stop or alarm, one of fans (upper one in the case of vertical layout, or either one in the case of horizontal layout) is stopped and power-saving operation is performed. If the suspended fan is restarted by canceling the emergency stop, it is not a problem with the fan.

■Replacement procedure

Replace the unit fan with the following procedures.

<MDS-E/EH-V1/V2/V3/SP/SP2 Series>

(1) Turn the breaker for the input power OFF, and wait for the CHARGE lamp on the power supply unit to turn OFF before removing the unit.

(2) Remove the fan guard from the back of the drive unit, and remove the two fan mounting screws.

(3) Remove the fan power cable.

(4) Disconnect the connection connector, and replace the fan.

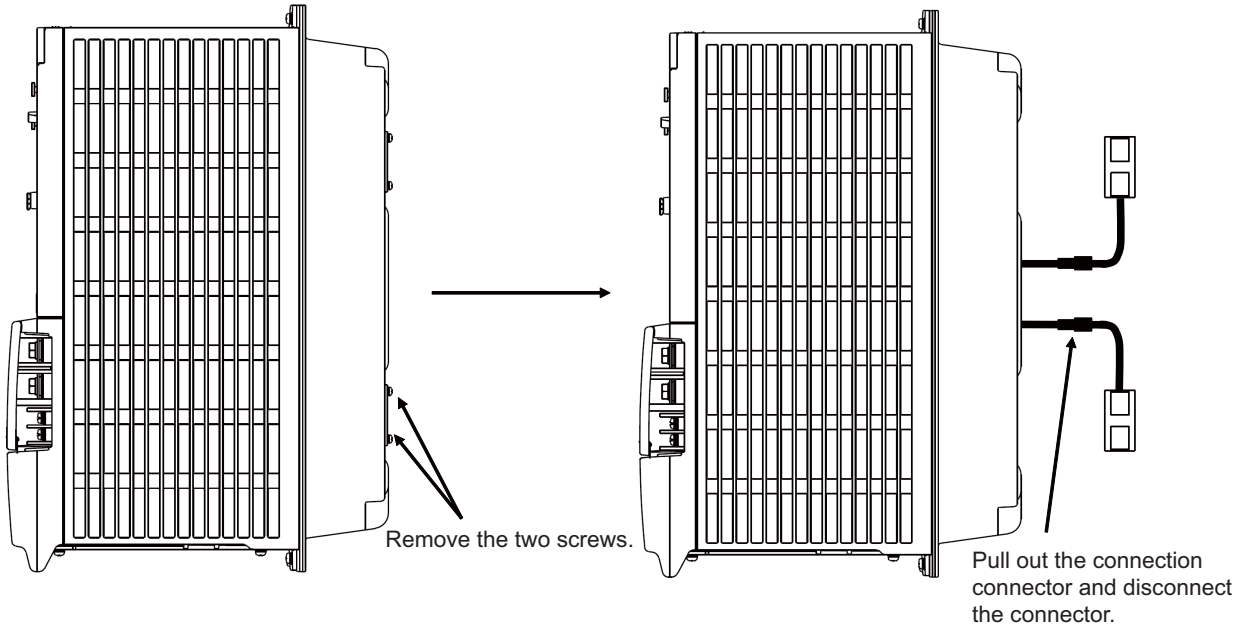

3.3.1.3 Replacing the Battery

■Replacing parts

<Replacing a battery equipped with the spindle/servo drive unit or the battery unit, MDSBTBOX-LR2060>

When the battery voltage is low (warning 9F), place an order for the same type of a battery as the one currently equipped with the unit.
Battery type LR20 is commercially available as a size-D alkaline battery. The battery may be purchased and replaced by the user.

Type	Battery equipped unit
MDS-BAT6V1SET	Servo drive unit
LR20 (size-D alkaline battery)	Battery unit, MDSBTBOX-LR2060

Note

(1) Four LR20 size-D alkaline batteries are needed for per battery unit, MDSBTBOX-LR2060.

⚠ CAUTION

1. When the battery voltage is low (warning 9F), do not shut OFF the power of the drive unit until replacement of the battery to protect the data.

2. Replace the MDSBTBOX-LR2060 battery with new batteries (LR20) that is within the recommended service period.

■Replacement procedure

Replace the battery with the following procedures.

⚠ CAUTION

1. Replace the batteries with new ones immediately after the battery voltage drop alarm (9F) has been output.

2. Replace the batteries while applying the drive unit's control power.

<Replacement procedure for the cell battery MDS-BAT6V1SET>

(1) Open the battery holder cover located at the front of the drive unit.

(2) Pull out the battery connector connected with the drive unit. Remove the battery.

(3) Install a new battery and connect a cable connector to the connector position where the old battery connector was pulled out from in step (2).

(4) Cancel the warning 9F by executing an alarm reset (pushing the NC reset button).

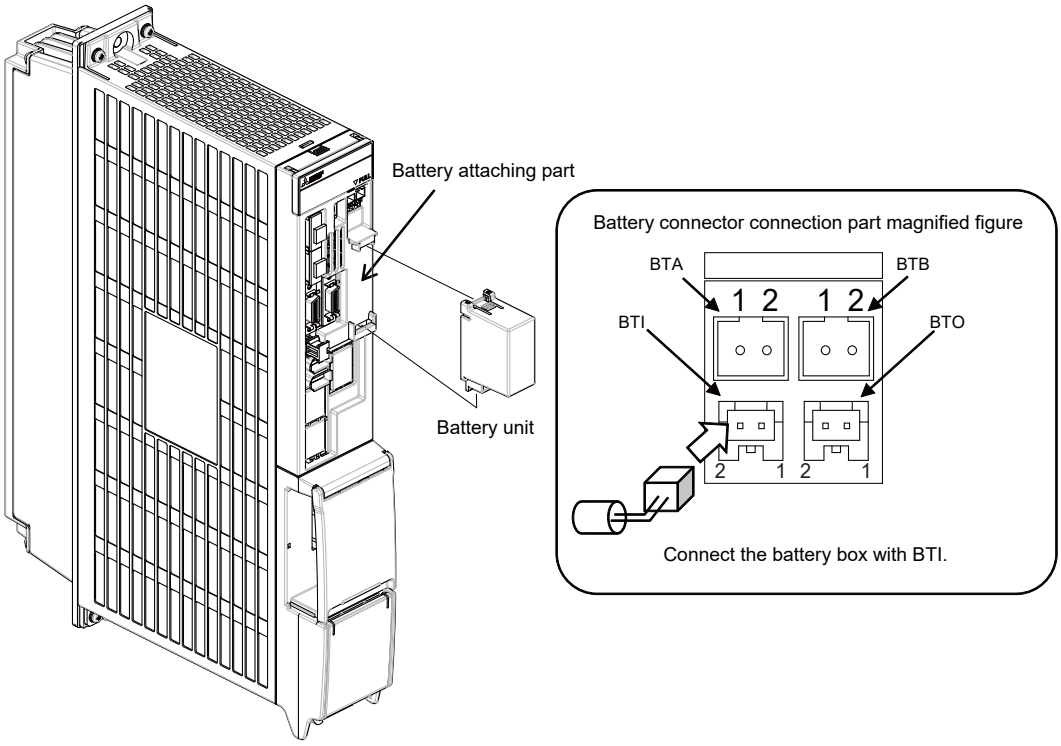

<Replacement procedure for the battery unit MDSBTBOX-LR2060>

Possible backup period

Possible backup period is at most one year. Thus, make sure to exchange the batteries in the one-year cycle.

How to replace the battery

(1) Remove the battery box cover (four screws).

(2) Replace the batteries with new ones. Be careful not to mistake the polarity.

(3) Attach the cover, and fix it with the four screws.

Note

(1) Replace the batteries while applying control power to the servo drive unit.

(2) When replacing the battery, do not let foreign objects enter. If the terminal area gets dirty, clean there.

(3) If the cover is ill-set, mist or foreign objects enter through the interstices and enter into the panel. Tighten the screws. (Tightening torque: 1N•m)

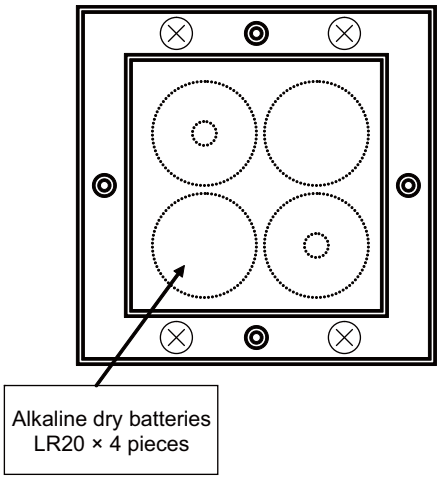

⚠ CAUTION

1. Replace the batteries with new ones that are in their recommended use period. (Check the recommended use period written on the batteries before using them.)

2. Replace the batteries with new ones immediately after the battery voltage drop alarm (9F) has been output.

3. Replace the batteries while applying the servo drive unit's control power.

4. Wrong connection may cause liquid leakage, heat generation and/or explosion.

5. Do not mix new batteries with used ones or mix different types of batteries.

3.3.2 MDS-EJ/EJH Series

3.3.2.1 Replacing the Drive Unit

■Arrangement of replacing parts

Contact Mitsubishi branch or your dealer for an order or a replacement of the drive unit.
Place an order for the same type of a drive unit as the one to be replaced.

■Replacement procedure

Replace the drive unit with the following procedures.

Procedures

(1) Turn the breaker for the input power OFF. Make sure the CHARGE lamp of the power supply unit is turned OFF.
(2) Disconnect all the connectors and the wires connected to the drive unit.
(3) Remove the two (four) screws fixing the drive unit onto the control panel. Remove the drive unit from the control panel.
(4) Make a same setting for the rotary switch and the dip switch of the new drive unit as those of the uninstalled drive unit.
(5) Install a new drive unit by following the removal procedure in reverse.

■Restoration

Data backup and restoration is not required before replacing drive units because drive units' data such as parameters are stored in the controller. However, carry out a backup of the whole system before replacement as a precautionary measure. The power for keeping the encoder's position data of an absolute position system is supplied from the battery connected to the drive unit. Keep the power ON once for 30 minutes or more if possible, and make sure to complete the replacement within 60 minutes after charging the encoder's capacitor.

3.3.2.2 Replacing the Unit Fan

■Replacing parts

Unit fan type

Drive unit type	Fan type	Size [mm]
MDS-EJ-V1-30 MDS-EJ-SP-20	MMF-04C24DS BKO-CB0479H01	40SQ.
MDS-EJ-V1-40/80/100 MDS-EJ-SP-40/80	MMF-06F24ES-RP3 BKO-CB0500H01	60SQ.
MDS-EJ-SP-100/120	MMF-08D24ES-RP1 BKO-CA1639H01 *M	80SQ.
MDS-EJ-SP-160	MMF-06F24ES-RP1 BKO-CA1638H01 *M×2	60SQ.
MDS-EJ-V2-30 MDS-EJ-SP2-20	MMF-06H24SS-CX1 BKO-CA2254H01	60SQ.
MDS-EJ-V2-40	MMF-08G24ES-CP1 BKO-CA1941H01	80SQ.

POINT

MDS-EJ-V1-10/15 does not have this unit fan.

■Replacement procedure

Replace the unit fan with the following procedures.

<MDS-EJ-V1-30, MDS-EJ-SP-20>

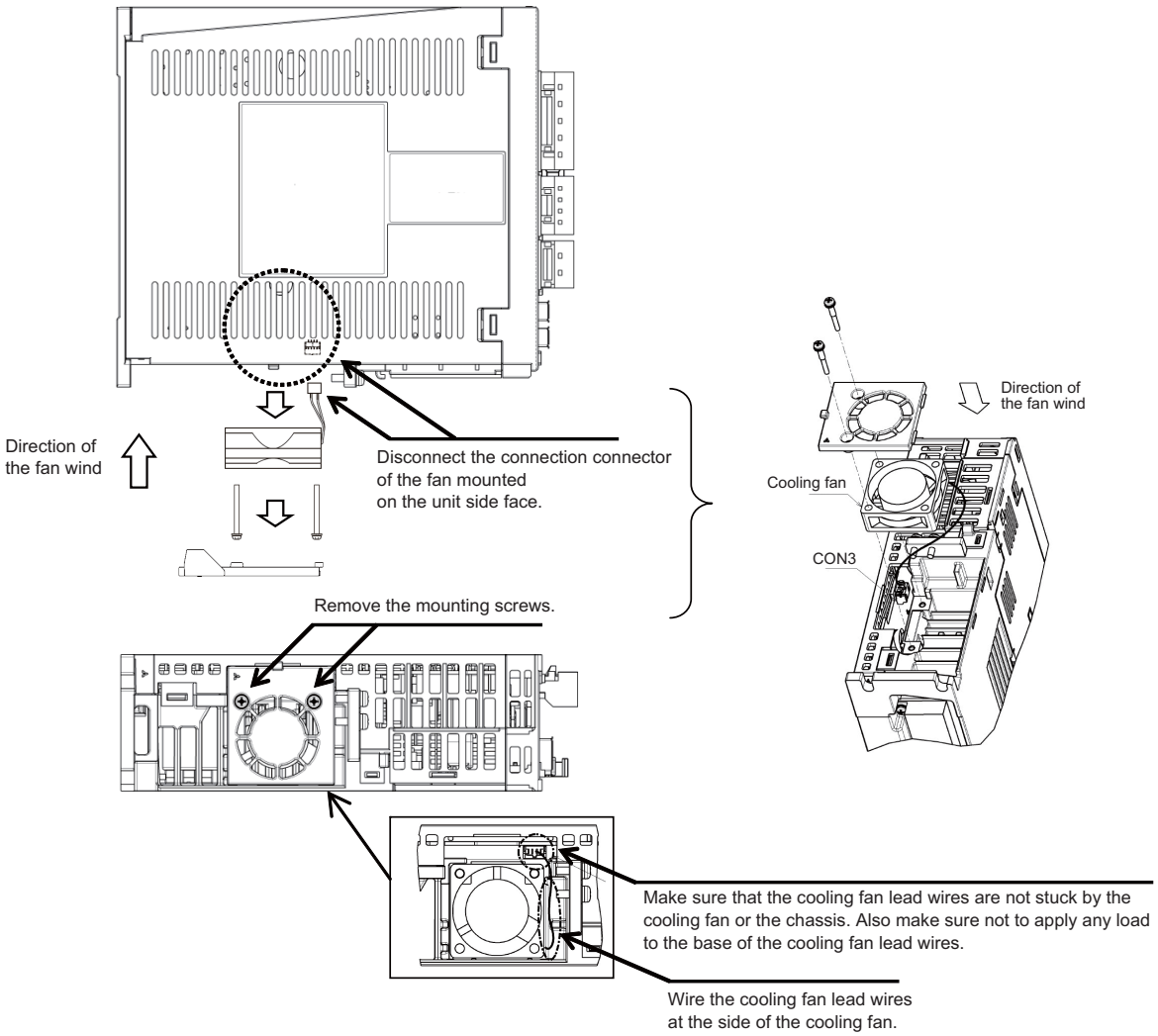

<MDS-EJ-V1-40/80/100, MDS-EJ-SP-40/80>

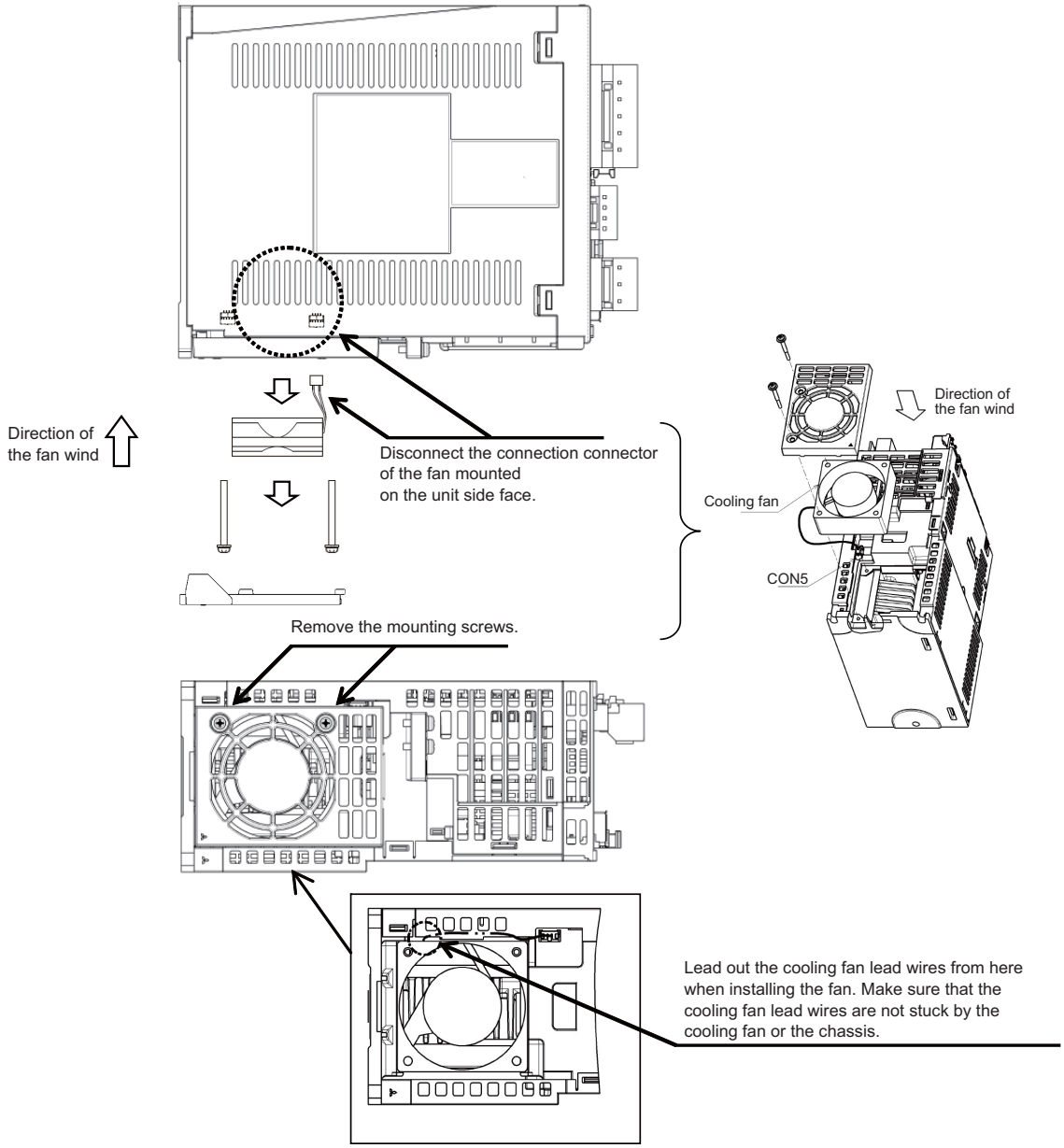

<MDS-EJ-SP-100/120>

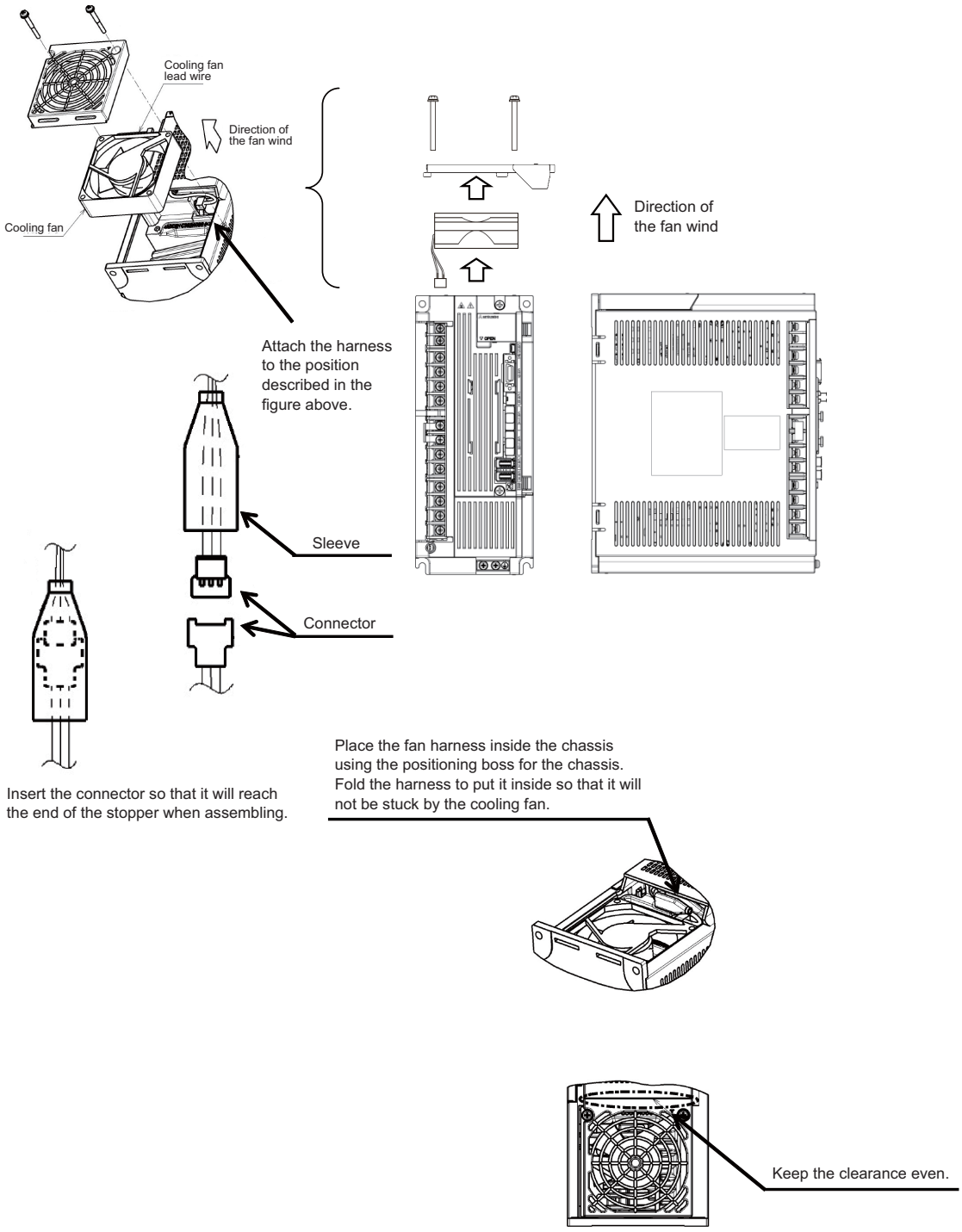

<MDS-EJ-SP-160>

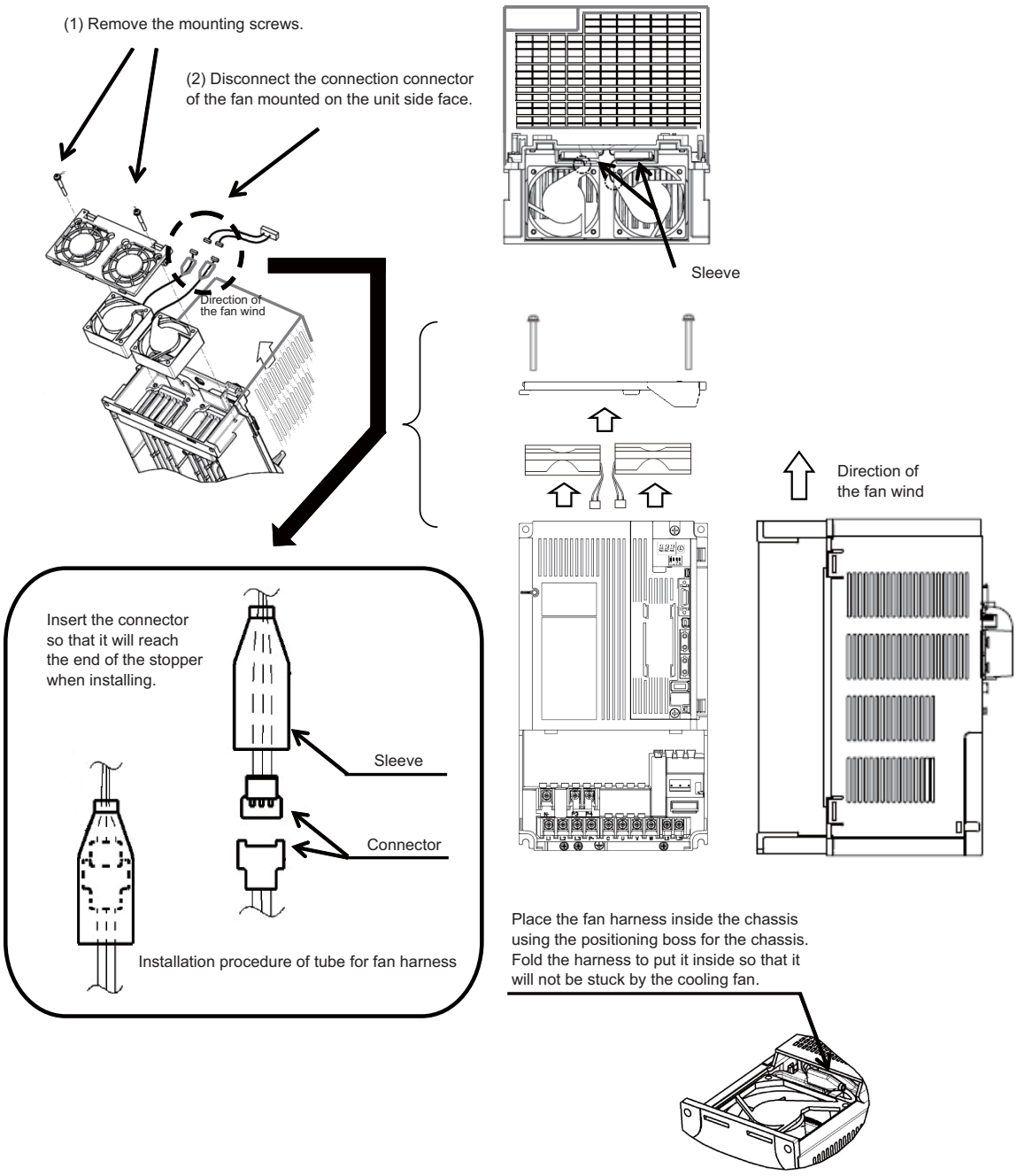
(1) Remove the mounting screws.
(2) Disconnect the connection connector of the fan mounted on the unit side face.
Direction of the fan wind
Sleeve
Direction of the fan wind
Insert the connector so that it will reach the end of the stopper when installing.
Sleeve
Connector
Installation procedure of tube for fan harness
Place the fan harness inside the chassis using the positioning boss for the chassis. Fold the harness to put it inside so that it will not be stuck by the cooling fan.

<MDS-EJ-V2-30, MDS-EJ-SP2-20>

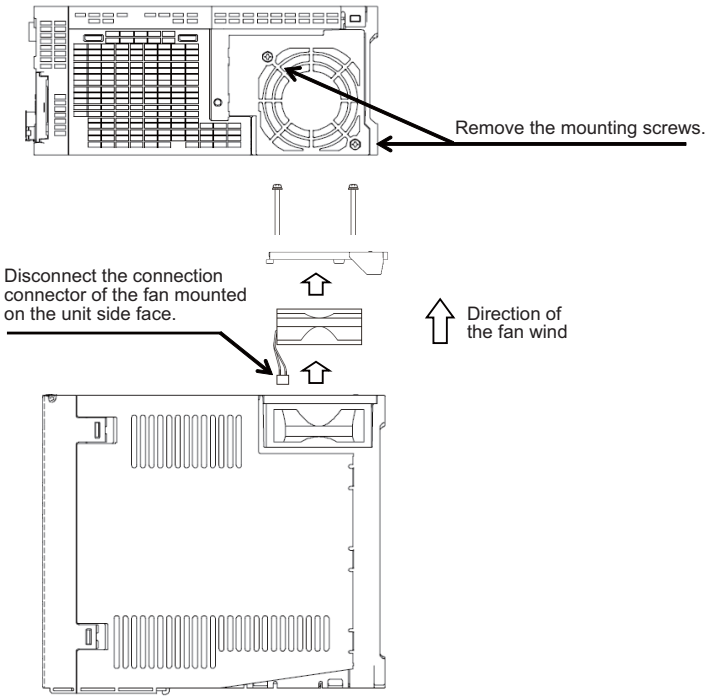

<MDS-EJ-V2-40>

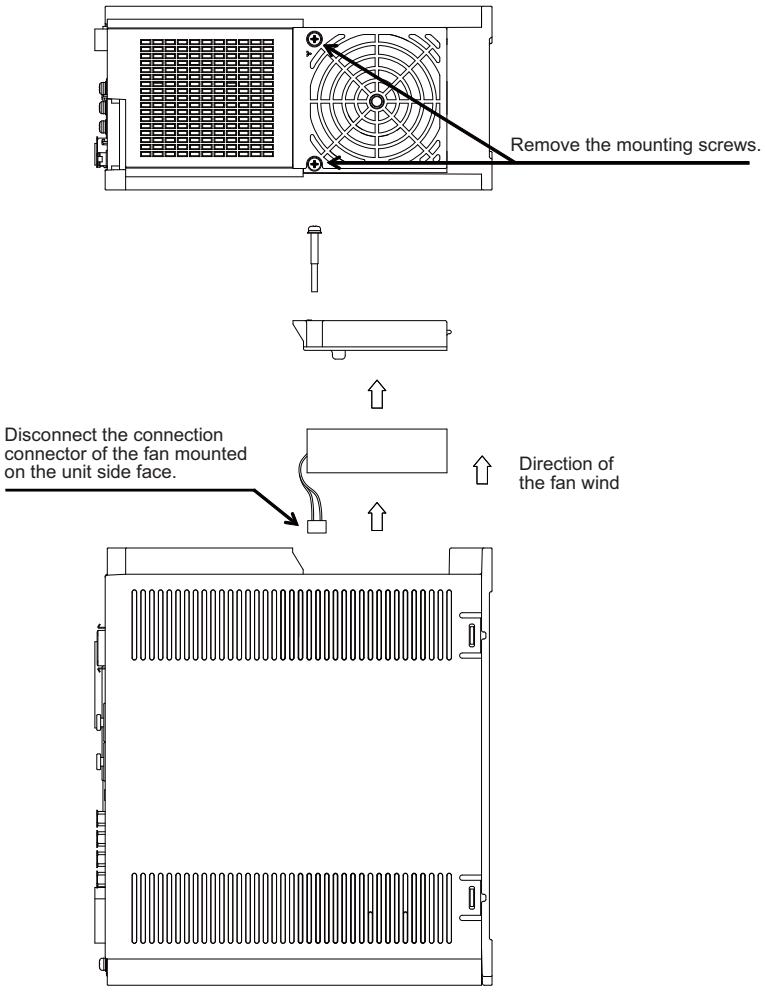

3.3.2.3 Replacing the Battery

■Replacing parts

<Replacing a battery equipped with the servo drive unit or the battery unit, MDSBTBOX-LR2060>

When the battery voltage is low (warning 9F), place an order for the same type of a battery as the one currently equipped with the unit.

Type	Battery equipped unit
MR-BAT6V1SET	Servo drive unit
LR20 (size-D alkaline battery)	Battery unit, MDSBTBOX-LR2060

<Replacing the battery unit MR-BAT6V1SET>

The battery unit itself must be replaced because the battery is built into the unit.
When the battery voltage is low (warning 9F), place an order for the same type of the battery unit as the one to be replaced.

> ⚠ **CAUTION**
>
> **1. When the battery voltage is low (warning 9F), do not shut OFF the power of the drive unit until replacement of the battery to protect the data.**
>
> **2. Replace the MDSBTBOX-LR2060 battery with new batteries (LR20) that is within the recommended service period.**

■Replacement procedure

Replace the battery with the following procedures.

> ⚠ **CAUTION**
>
> **1. The power of the drive unit must be turned ON for 30min. or longer before replacing the battery.**
>
> **2. Replace the batteries while applying the drive unit's control power.**

<Replacement procedure for the cell battery MR-BAT6V1SET>

(a) Installing and removing the cell battery

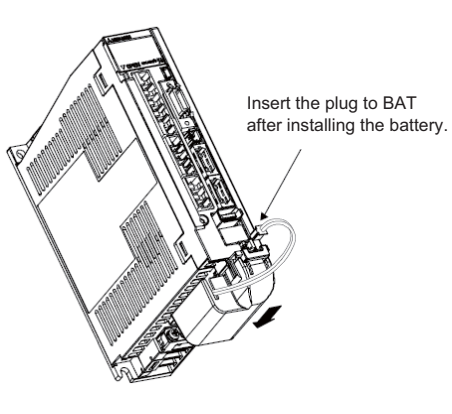

Installation

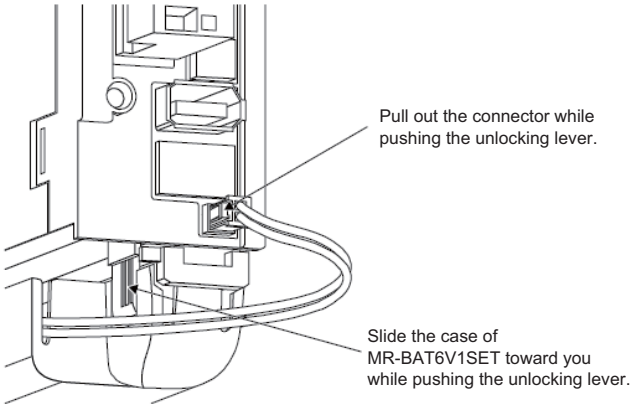

Removal

(b) Replacing the built-in battery

MR-BAT6V1SET that reached the end of the life can be reused by replacing the MR-BAT6V1 battery.

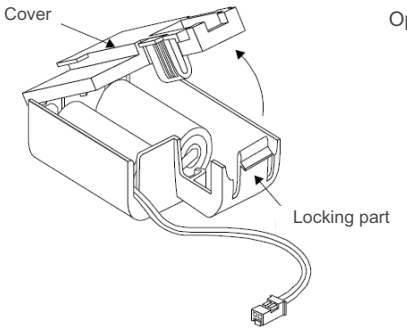

Open the cover while pushing the locking part.

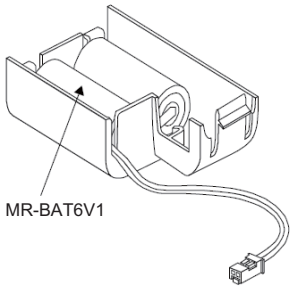

Replace the built-in battery with a new battery for MR-BAT6V1.

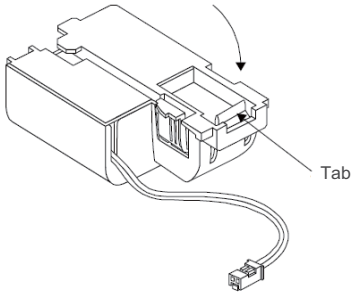

Close the cover by pushing until it is fixed with the tab of the locking part.

Cancel the warning 9F by executing an alarm reset (pushing the NC reset button).

<Replacement procedure for the battery unit MDSBTBOX-LR2060>

Possible backup period

Possible backup period is at most one year. Thus, make sure to exchange the batteries in the one-year cycle.

How to replace the battery

(1) Remove the battery box cover (four screws).

(2) Replace the batteries with new ones. Be careful not to mistake the polarity.

(3) Attach the cover, and fix it with the four screws.

Note

(1) Replace the batteries while applying control power to the servo drive unit.

(2) When replacing the battery, do not let foreign objects enter. If the terminal area gets dirty, clean there.

(3) If the cover is ill-set, mist or foreign objects enter through the interstices and enter into the panel. Tighten the screws. (Tightening torque: 1N•m)

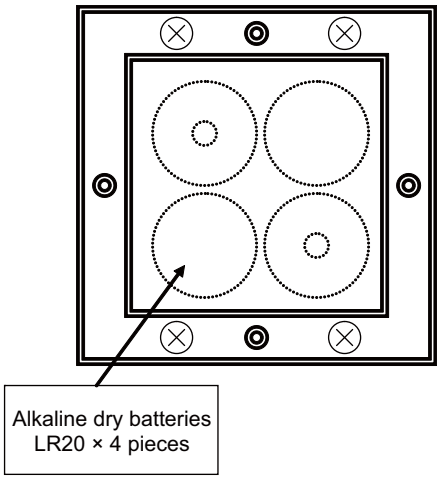

⚠ CAUTION

1. Replace the batteries with new ones that are in their recommended use period. (Check the recommended use period written on the batteries before using them.)

2. Replace the batteries with new ones immediately after the battery voltage drop alarm (9F) has been output.

3. Replace the batteries while applying the servo drive unit's control power.

4. Wrong connection may cause liquid leakage, heat generation and/or explosion.

5. Do not mix new batteries with used ones or mix different types of batteries.

3.3.3 MDS-EM/EMH Series

3.3.3.1 Replacing the Drive Unit

■Arrangement of replacing parts

Contact Mitsubishi branch or your dealer for an order or a replacement of the drive unit.
Place an order for the same type of a drive unit as the one to be replaced.

■Replacement procedure

Replace the drive unit with the following procedures.

Procedures

(1) Turn the breaker for the input power OFF. Make sure the CHARGE lamp of the power supply unit is turned OFF.
(2) Disconnect all the connectors and the wires connected to the drive unit.
(3) Remove the two (four) screws fixing the drive unit onto the control panel. Remove the drive unit from the control panel.
(4) Make a same setting for the rotary switch and the dip switch of the new drive unit as those of the uninstalled drive unit.
(5) Install a new drive unit by following the removal procedure in reverse.

■Restoration

Data backup and restoration is not required before replacing drive units because drive units' data such as parameters are stored in the controller. However, carry out a backup of the whole system before replacement as a precautionary measure. The power for keeping the encoder's position data of an absolute position system is supplied from the battery connected to the drive unit. Keep the power ON once for 30 minutes or more if possible, and make sure to complete the replacement within 60 minutes after charging the encoder's capacitor.

3.3.3.2 Replacing the Fan Unit

■Replacing parts

Drive unit type	Fan type
MDS-EM-SPV3-16040S	EM-FS-18
MDS-EM-SPV3-10040 to 200120 MDS-EMH-SPV3-8040 to 10060	EM-FS-26
MDS-EM-SPV3-320120	EM-FS-30

■Replacement procedure

Replace the fan unit with the following procedures.

(1) Remove the mounting screws from the fan unit cover on the top of the drive unit.

(2) Remove the fan unit cover.

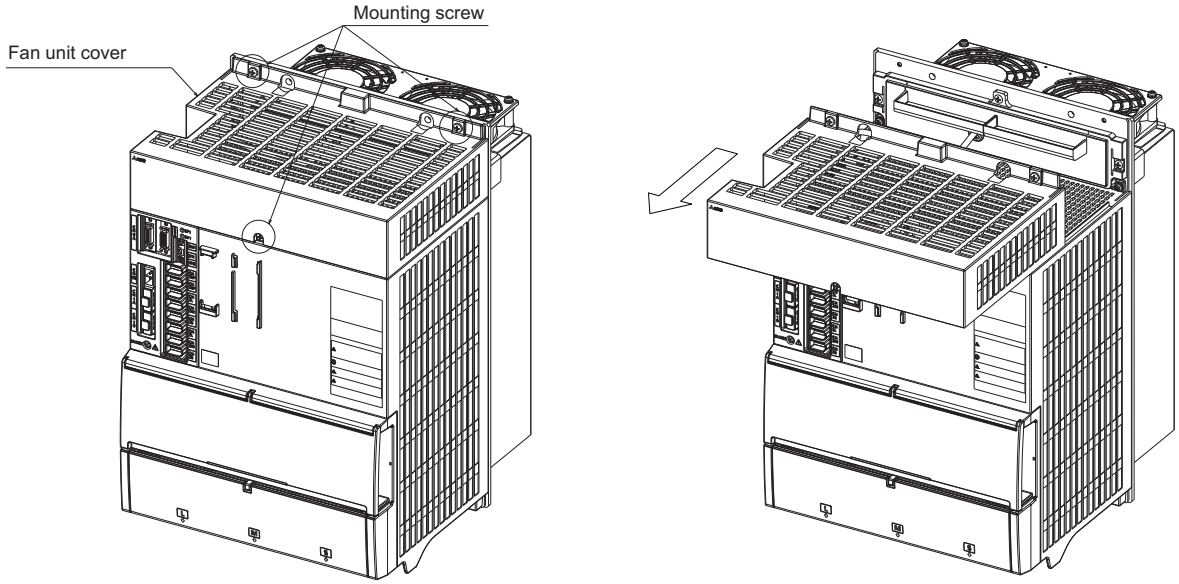

(3) Remove the fixing screws from the fan unit. Disconnect the connector on the top and pull out the fan unit.

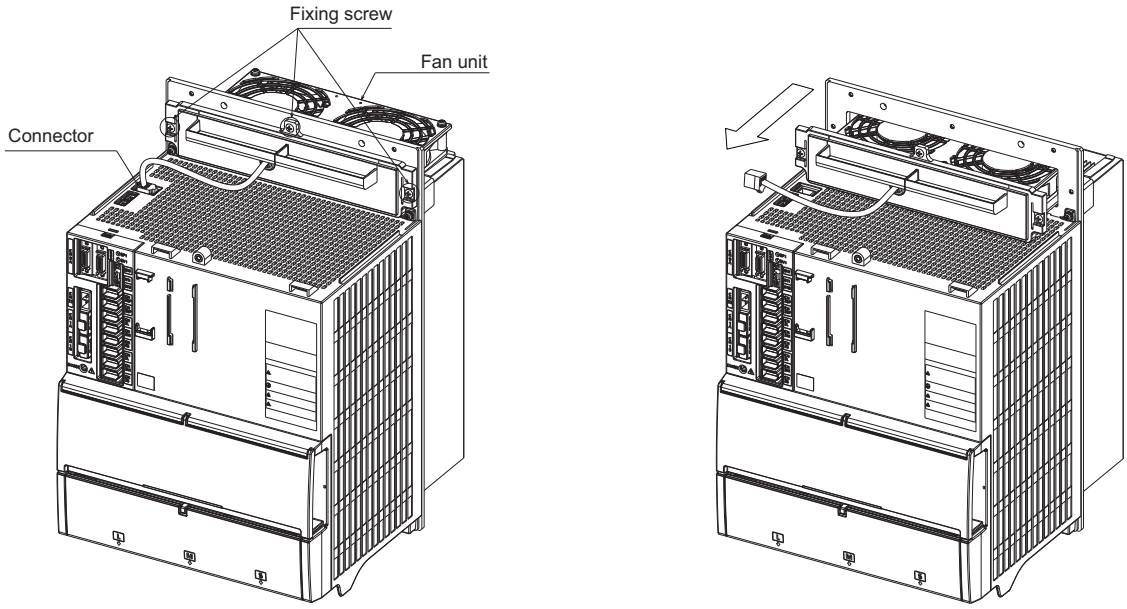

(4) When installing the fan unit, insert the sheet metal of the fan unit into the fin rails.

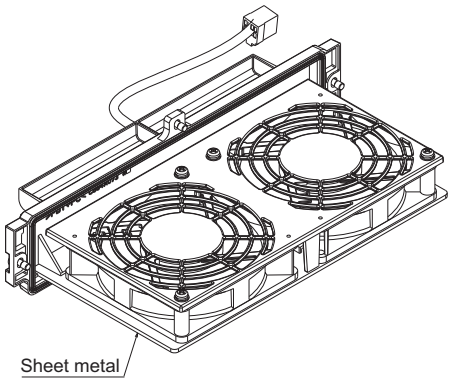

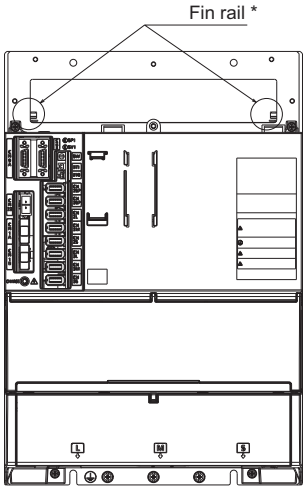

* Although MDS-EM-SPV3-16040S and 320120 do not have fin rails, the installation of fan units is not affected.

3.3.3.3 Replacing the Battery

■Replacing parts

<Replacing a battery equipped with the multi axis drive unit or the battery unit, MDSBTBOX-LR2060>

When the battery voltage is low (warning 9F), place an order for the same type of a battery as the one currently equipped with the unit.
Battery type LR20 is commercially available as a size-D alkaline battery. The battery may be purchased and replaced by the user.

Battery type

Type	Battery equipped unit
MDS-BAT6V1SET	Multi axis drive unit
MR-BAT6V1SET	Multi axis drive unit
LR20 (size-D alkaline battery)	Battery unit, MDSBTBOX-LR2060

Note

(1) Four LR20 size-D alkaline batteries are needed for per battery unit, MDSBTBOX-LR2060.

⚠ CAUTION

1. When the battery voltage is low (warning 9F), do not shut OFF the power of the drive unit until replacement of the battery to protect the data.

2. Replace the MDSBTBOX-LR2060 battery with new batteries (LR20) that is within the recommended service period.

■Replacement procedure

Replace the battery with the following procedures.

⚠ CAUTION

1. Replace the batteries with new ones immediately after the battery voltage drop alarm (9F) has been output.

2. Replace the batteries while applying the drive unit's control power.

<Replacement procedure for the cell battery MDS-BAT6V1SET>

(1) Open the battery holder cover located at the front of the drive unit.

(2) Pull out the battery connector connected with the drive unit. Remove the battery.

(3) Install a new battery and connect a connector to the connector position where the old battery connector was pulled out from in step (2).

(4) Cancel the warning 9F by executing an alarm reset (pushing the NC reset button).

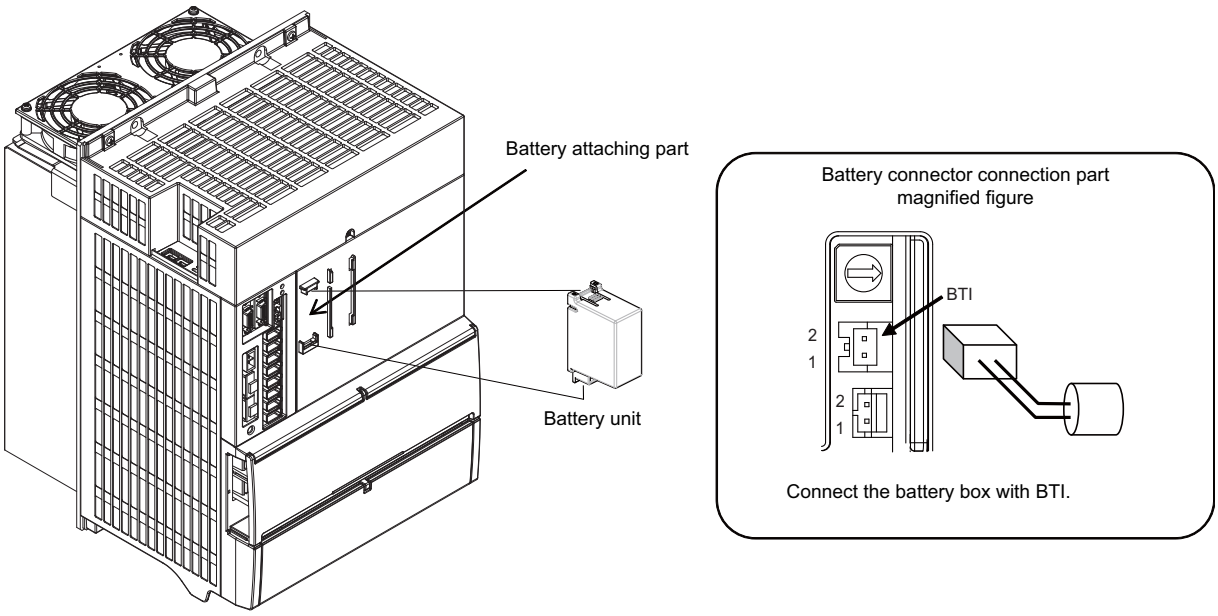

<Replacement procedure for the cell battery MR-BAT6V1SET>

(1) Pull out the battery connector connected with the drive unit while pushing the unlocking lever.

(2) Remove the battery unit by sliding upward while pushing the unlocking lever.

(3) Install a new battery and connect a cable connector to the connector position where the old battery connector was pulled out from in step (2).

(4) Cancel the warning 9F by executing an alarm reset (pushing the NC reset button).

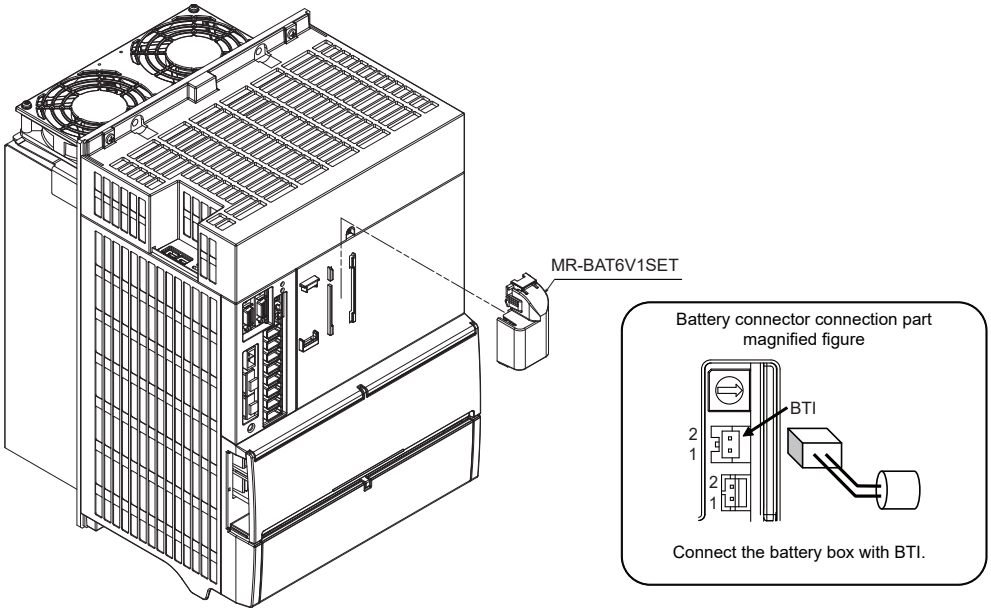

<Replacement procedure for the battery unit MDSBTBOX-LR2060>

Possible backup period

Possible backup period is at most one year. Thus, make sure to exchange the batteries in the one-year cycle.

How to replace the battery

(1) Remove the battery box cover (four screws).

(2) Replace the batteries with new ones. Be careful not to mistake the polarity.

(3) Attach the cover, and fix it with the four screws.

Note

(1) Replace the batteries while applying control power to the servo drive unit.

(2) When replacing the battery, do not let foreign objects enter. If the terminal area gets dirty, clean there.

(3) If the cover is ill-set, mist or foreign objects enter through the interstices and enter into the panel. Tighten the screws. (Tightening torque: 1N•m)

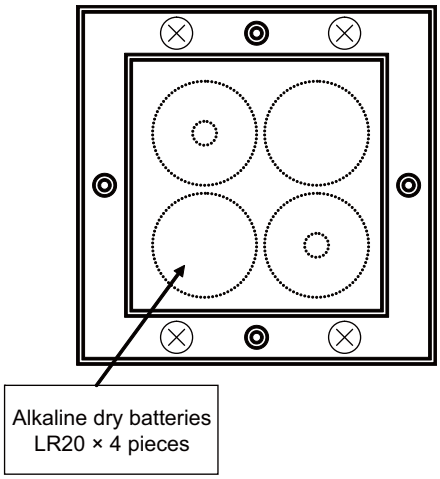

⚠ CAUTION

1. Replace the batteries with new ones that are in their recommended use period. (Check the recommended use period written on the batteries before using them.)

2. Replace the batteries with new ones immediately after the battery voltage drop alarm (9F) has been output.

3. Replace the batteries while applying the servo drive unit's control power.

4. Wrong connection may cause liquid leakage, heat generation and/or explosion.

5. Do not mix new batteries with used ones or mix different types of batteries.

4

Failure Diagnosis

4.1 Introduction

If trouble occurs during operation, the accurate cause must be found so that adequate measures can be taken. Confirm "when", "when doing what", "what kind of trouble" and "how frequently" the trouble occurred. Also check how many years the machine has been operated, and how many hours a day it is used.

4.2 Failure Diagnosis Procedure

Investigate the cause of the failure according to the following procedures.

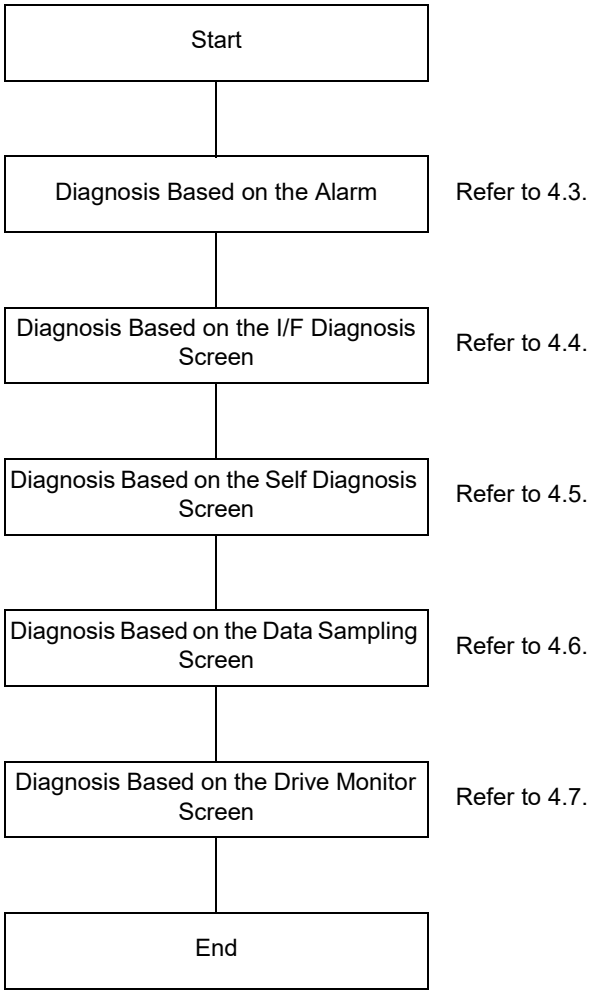

4.3 Diagnosis Based on the Alarm

Alarm information includes the "NC message", "PLC message", and "Alarm history".

4.3.1 How To Check the Alarm Information

Diagn –

A list of currently occurring alarms or messages can be displayed on this screen.
The displayed messages include the NC alarms, stop codes, alarm messages, operator messages, etc.
A history of alarm information can be displayed also.

■NC message

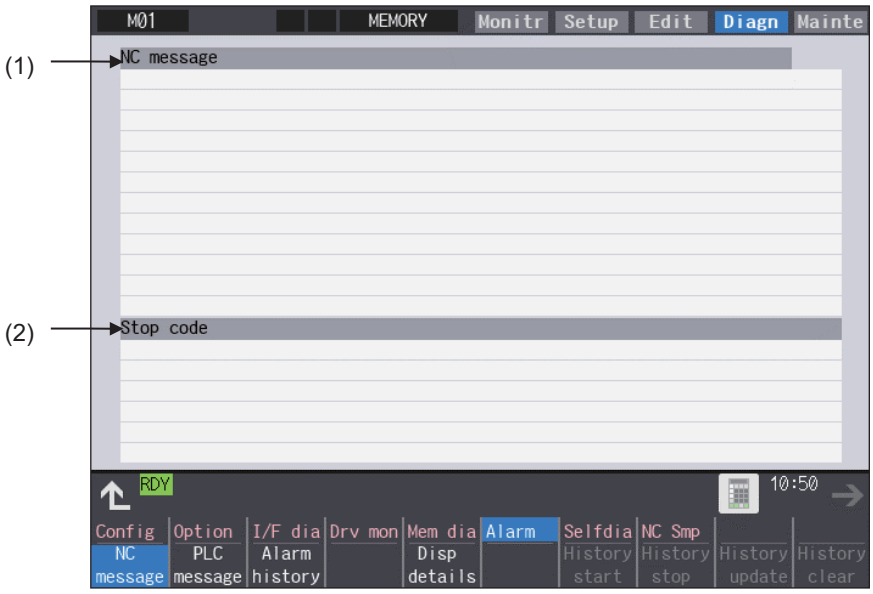

■PLC message

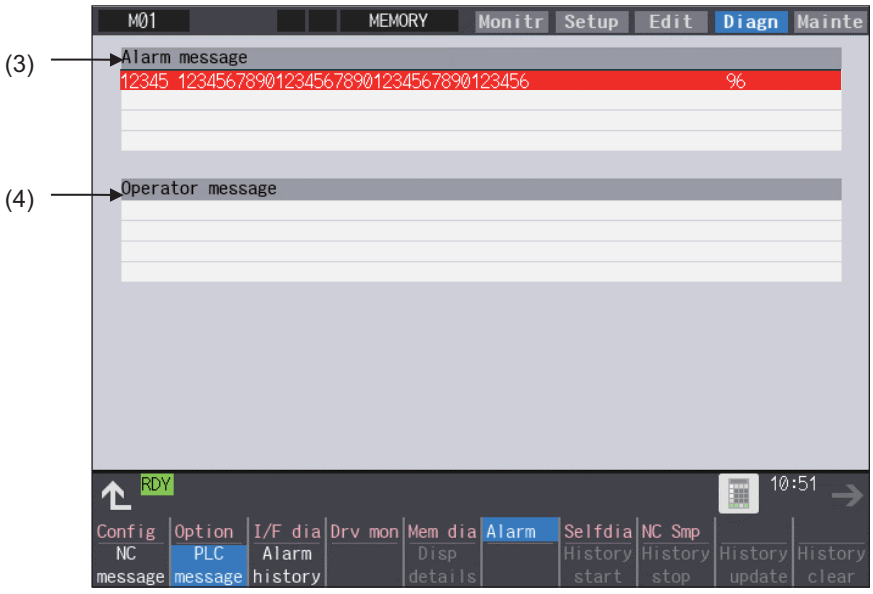

Display items

Display items		Details
(1)	NC message	This displays the operation alarms, program errors, MCP alarms, servo alarms, system alarms, etc. Up to 10 messages are displayed in order of priority.
(2)	Stop code	This displays the automatic operation status or stop status during automatic operation. Up to 4 messages are displayed in order of priority.
(3)	Alarm message	Using the PLC programs, this displays messages such as details of machine abnormalities. This varies depending on the MTB specifications. Up to 4 messages are displayed.
(4)	Operator message	Using the PLC programs, this displays operator information messages. This varies depending on the MTB specifications. Macro alarm messages are also displayed in this field. Up to 4 messages are displayed.

Note

(1) When the 2nd line of the operator message cannot be displayed, only the 1st line is displayed.

Message display colors

The messages are color-coded in the following manner:

Message type		Character color	Background color
NC message	Alarm	White	Red
	Warning	Black	Yellow
Stop code		Black	Yellow
Alarm message		White	Red
Operator message		Black	Yellow
NC alarm message at the background check		White	Orange

Axis name display

The axis name is displayed in messages for each axis. The axis name is displayed as shown below according to the axis type.

Axis type	Axis name display	Display example	Remarks
NC axis	Control axis name (Name of axis in part system)	XYZ	If the same message occurs for each part system, several NC axes are displayed together.
Spindle	'S' + spindle No.	S1S2	If the same message occurs, several spindles are displayed together.
PLC axis	'P' + PLC axis No.	P1P2	If the same message occurs, several PLC axes are displayed together.
Auxiliary axis	'A' + auxiliary axis No.	A1A2	If the same message occurs, several auxiliary axes are displayed together.

If the same message occurs for different axis types, they will appear as separate messages.

Part system display

The part system name is also displayed if the message is output for each part system. The part system name set in "#1169 system name" is displayed. The part system name does not appear for the 1-part system.

4.3.2 Alarm History

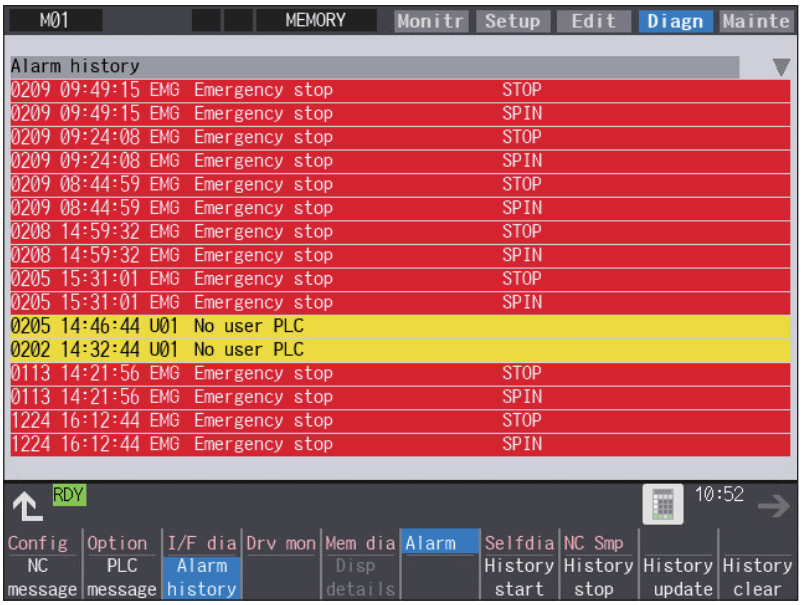

When an alarm occurs, the alarm information is recorded. When the NC power is ON, an alarm is automatically recorded in alarm history. Alarm information is recorded from the latest alarm to 512.
Alarm information recorded in the history is NC message displayed on "NC message" screen and alarm messages displayed on "PLC message" screen.
The range etc. of record are shown as follows:

Record condition: When an alarm occurs (When two or more alarms occur at the same time, up to five alarms are recorded.)
With multi-part system, 1st part system is given priority and recorded. (Following 2nd part system, 3rd part system...)

Number of history: 512 alarms (Whole)

Range of record: NC alarm (alarm, warning), PLC alarm message

Note

(1) The following alarms are not recorded on the alarm/warning screen.

♦Operation alarm

- External interlock axis exists (M01 0004)
- Cutting override zero (M01 0102)
- External feed rate zero (M01 0103)
- Block start interlock (M01 0109)
- Cutting block start interlock (M01 0110)
- Interference check disabled (M01 0200)
- Rapid override zero (M01 0125)
- Sp-Sp polygon cut interlock (M01 1033)

♦"U50 PLC stopped" before the HMI screen starts up

(2) When multiple servo alarms have occurred, only an alarm which occurred first is displayed on the alarm/warning screen.

Menus

Menus	Details
Alarm history	This displays the first page of the alarm history. The history sequentially displays 16 alarms (20 alarms for 15-type/19-type display unit) per page with the latest alarm on the top. When the total number of alarms exceeds the maximum number, the second page will be displayed. If there are two or more NC alarms of the same day and time, the alarms are sequentially displayed from the alarm and warning of the 1st part system. To display the old history, press the PAGE key. To display the new history, press the PAGE key. The screen can also be switched by pressing ▲/▼ keys on it.
History start	The data collection of the alarm history is started (restarted). The operation message "The collection begin?(Y/N)" appears. When the [Y] or [INPUT] key is pressed, the data collection is started after the operation message "The collection begin" appears. Press the [N] or other than [INPUT] key when the data collection will be not started/restarted.
History stop	The data collection of the alarm history is stopped. The operation message "The collection stop?(Y/N)" appears. When the [Y] or [INPUT] key is pressed, the data collection is stopped after the operation message " The collection stop" appears. Press the [N] or other than [INPUT] key when the data collection will be not stopped.
History update	The alarm information of history is updated. When the history is updated, the page with latest alarm information (first page) is displayed. The history is updated even if changing to another screen, and returning to the alarm history screen.
History clear	The alarm information of history is cleared. The operation message "Execute the collection data clear?(Y/N)" appears. When the [Y] or [INPUT] key is pressed, the alarm information of history is cleared after the operation message "Data clear complete" appears. The first page is displayed when the history is cleared.

Note

(1) The menus [History start], [History stop], [History update] and [History clear] are valid when the alarm history function is valid and the menu [Alarm history] is selected.

(2) When the alarm history function is used for the first time, clear the alarm history contents by pressing the menu [History clear]. Unnecessary data may be recorded in the alarm history.

Precautions

(1) If the recording of the alarms is stopped with the menu [History stop] in the alarm history screen, alarms are not recorded in the history even after the NC power is turned OFF and ON. In this case, the recording of the alarms must be started with the menu [History start] in the alarm history screen.

(2) If the time and date are changed, the change is not reflected to the time and date of the history data recorded before the change. Therefore, if the time and date are changed, clear the history with the menu [History clear].

(3) If an alarm occurs while the alarm history is displayed, the display is not updated. Update the history by switching the screen with the menu [History update].

(4) Depending on the part system setting of "Sampling spec" in the maintenance diagnostic data collection setting, the part systems to be recorded in the alarm history vary. If "0" is set, alarms of all part systems are recorded.

(5) The alarm history data collection start/stop operation is switched using the menu [Start] or [Stop] of data collection regardless of whether "Alarm history" is set to "0" or "1" in "Collecting data select" in the maintenance diagnostic data collection setting.

4.3.3 Alarm Message Details

Methods to confirm the alarm message details (Details, Remedy) are as follows:

- Confirm by "Guidance display" on the NC screen
- Confirm by the separate manual

■To confirm by "Guidance display" on the NC screen

Confirm details with the alarm guidance (alarm message details) displayed on the NC screen by pressing the [?] key or

key.

While the alarm history screen is displayed, the guidance of the alarm displayed on the screen is displayed. (It might be different from the alarm which currently occurs.)

■To confirm by the separate manual

For details, refer to "Alarm/Parameter Manual".

4.4 Diagnosis Based on the I/F Diagnosis Screen

4.4.1 I/F Diagnosis Screen

Diagn – I/F dia

The various input/output signals for the PLC (Programmable Logic Controller) control can be displayed and set in this screen.
These signals can be used in confirmation of the machine sequence operation during PLC development, and in confirmation and forced output, etc., of the input/output data between the NC and PLC.

Note

(1) Pay close attention to the sequence operation when using these functions during machine operation.

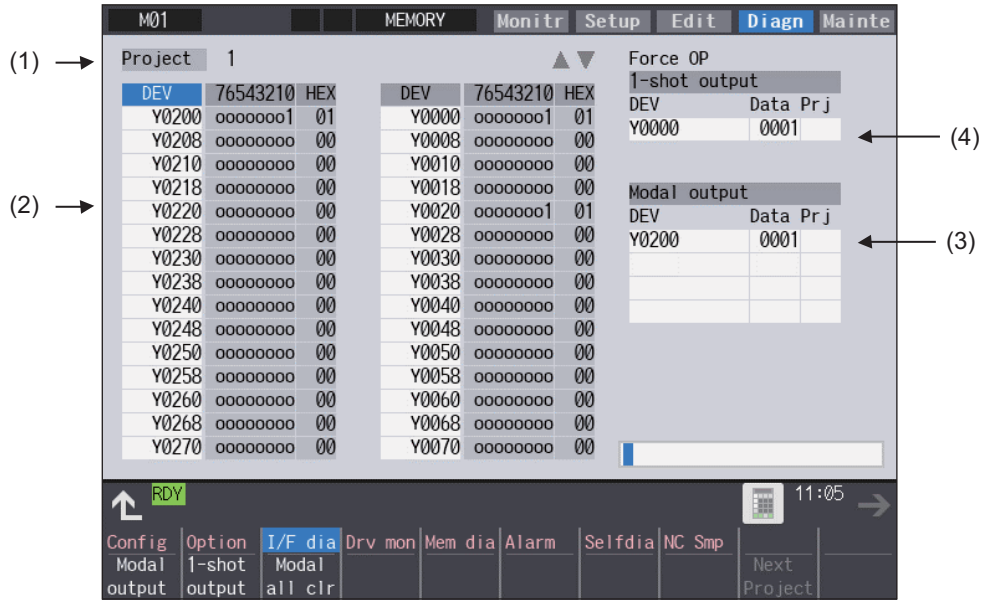

Display items

	Display items	Details
(1)	Project	This displays the currently displayed project.
(2)	Device No. and input/output signal value (binary/hexadecimal display)	This displays the data from the device Nos. designated in the setting area in numerical order. The data is displayed as binary (bit units) and hexadecimal values. Individual device Nos. can be displayed separately in the left area and right area. Select the display area with the [←|] and [→|] key when operations such as display changeover and data setting are carried out. Target device: X, Y, M, L, F, SB, B, SM, V, SW, SD, TI, TO, TS, TA, STI, STO, STS, STA, CI, CO, CS, CA, D, R, ZR, W The common devices for each project are X, Y, R, and ZR.
(3)	Modal output	This displays the data and device to carry out modal output. The details to be defined are set here when carrying out the modal type forced output of PLC interface signals. For details, refer to "Carrying Out Modal Output".
(4)	1-shot output	This displays the data and device to carry out one-shot output. The details to be defined are set here when carrying out the one-shot type forced output of PLC interface signals. For details, refer to "Carrying Out One-shot Output".

Menus

Menus	Details
Modal output	This changes the setting area to an input standby status. The signal is forcibly output (modal).
1-shot output	This changes the setting area to an input standby status. The signal is forcibly output (one-shot).
Modal all clr	A confirmation message appears, and the machine turns into standby status. The force OP (one-shot output) of all I/O signals are canceled. (*1)
Next Project	The device and I/O signal of the next project are displayed. If the last project is displayed, the top project is displayed.

(*1) These menus are grayed out ordinarily, and cannot be operated.

How to read the device No. and display data

A device is an address for classifying a signal handled in the PLC. A device No. is a series of numbers attached to that device.

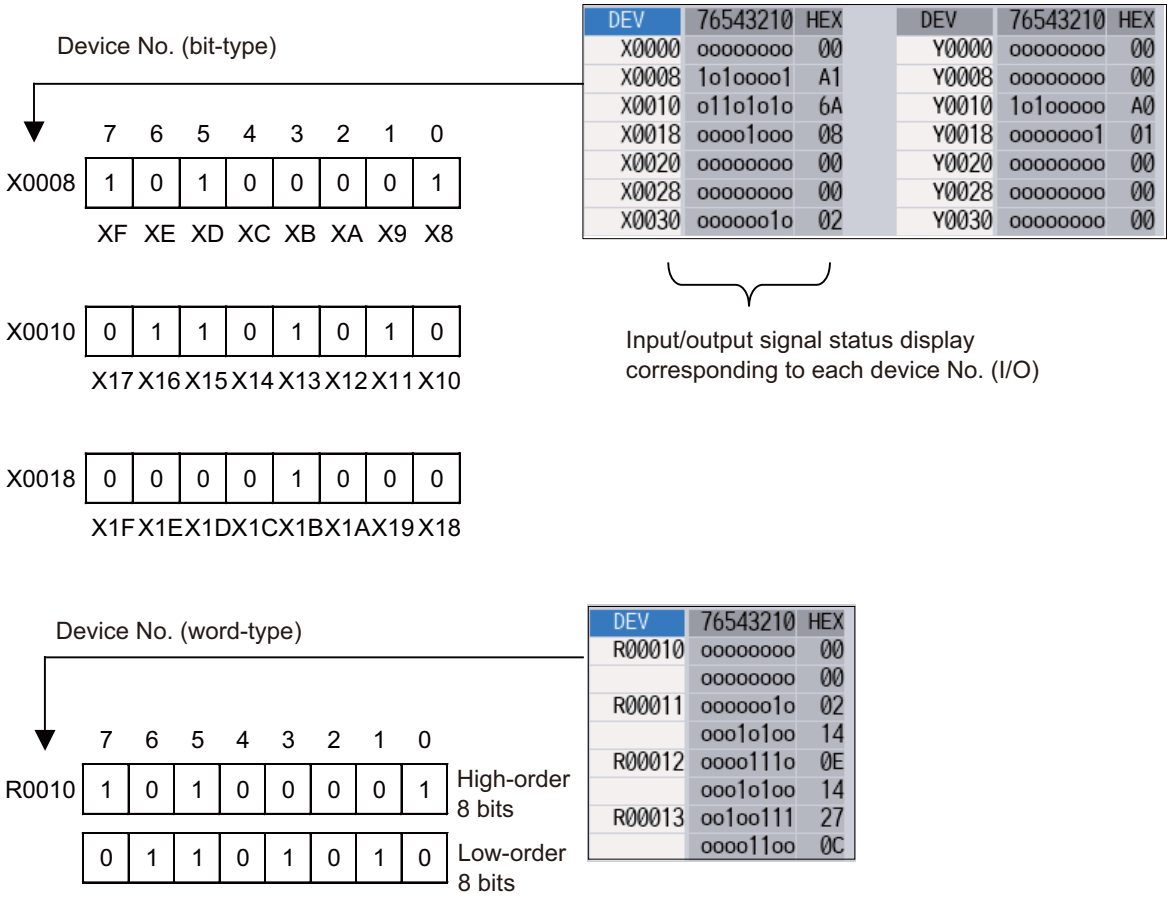

4.4.1.1 Displaying the PLC Device Data

The various status signals and register data used in the PLC can be monitored and displayed.

When this screen is first selected, the respective 16-byte amounts of input/output data are displayed from device "X0000" on the left display area, and from device "Y0000" on the right side.

This screen constantly monitors and displays the PLC signal statuses. Consequently, when signals are changed in the PLC, the display is changed according to the changes.

Note that because time differences occur between the PLC signal change and the signal display, there may be a delay in the display. The machine may also not be able to correspond to extremely brief signal changes.

Displaying the data of a arbitrary device No. "X0020"

(1) Press the menu [Next Project]. → The display is switched to the I/O signal of the next project. (Press the menu key to switch the project in order. Note that only projects are switched, but the device number currently displayed is not switched.)

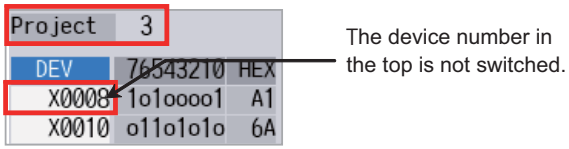

(2) Press the menu tab key [|←]/[→|], and select the area to display the data.

(3) Set the device No. (X0020), and press the [INPUT] key. → The device "X0020" appears at the head of the valid display area.

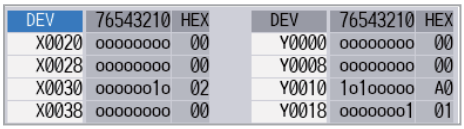

Note

(1) When setting the device No., an error will occur if a number exceeding the specifications or an illegal address is set.
(2) The input/output signals of X, Y, R, and ZR are the same for all projects.

Changing the display with the page keys

The valid area device Nos. change in page units when [PAGE▲]/[PAGE▼] or ▲/▼ on the screen is pressed. Changing of the pages stops within the range of device numbers of which the device has. ▲/▼ keys appear only when the screen has items on the next/previous page.

(1) Press the [PAGE▼] key. → The data is displayed from the next number currently displayed.

4.4.1.2 Carrying Out Modal Output

Modal type forced output of PLC interface signals is carried out. Once set, this data is held until cancelled, the power is turned ON/OFF, or other data is overwritten. There are four sets of devices that modally output. If this number is exceeded, the previously existing data is overwritten.

Menus used in modal output

Menus	Details
Modal clear	This releases the modal output for the device at the cursor position in the modal output area. The released data is erased from this area.

Modally outputting data "1" to device "X0048"

(1) Press the menu [Modal output]. → The mode changes to the modal output mode, and the cursor appears at the modal output area.

(2) Using the [↑] and [↓] keys, move the cursor to the setting position.

(3) Set the device and data, and press the [INPUT] key. → Modal output is executed, and the cursor disappears. The data that was in the cursor position is overwritten by the input data, and is invalidated.

X0048/1 [INPUT]

The modal output mode is canceled by pressing the key or the key.

Note

(1) The data of the modally output device is displayed in order in the selected area. This modal output is held until the output is canceled or the power is turned OFF.

(2) When no data is set (Example: "X0048/","X0048"), the operation message "Setting Data not found" is displayed.

(3) The X, Y, R, and ZR devices are modally output for all projects.

(4) The devices other than X, Y, R, and ZR are modally output for the currently displayed project.

Releasing the modal output

(1) Press the menu [Modal output]. → The mode changes to the modal output mode, and the cursor appears at the modal output area.

(2) Using the [↑] and [↓] keys, move the cursor to the data to be released.

(3) Press the menu [Modal clear]. → The data that was in the cursor position is released from modal output. The "DEV" and "Data" columns become blank.

The modal output mode is canceled by pressing the key or the key.

⚠ CAUTION

Pay close attention to the sequence operation when carrying out forced data setting (forced output) in the I/F diagnosis screen during machine operation.

4.4.1.3 Carrying Out One-shot Output

The one-shot type PLC interface signal forced output is forcibly output only once during the screen operations. Thus, it may not be possible to confirm the PLC interface signals updated with the PLC on the screen.

One-shot outputting data "1" to device "X0042"

(1) Press the menu [Next Project]. → The display is switched to the I/O signal of the next project.
(Press the menu key to switch the project in order.)

(2) Press the menu [1-shot output].

(3) Set the device and data, and press the [INPUT] key.
X0042/1 [INPUT] → The input data is overwritten in the one-shot output area, and is one-shot output.
The cursor in the one-shot output area disappears.
The data of the one-shot output device is displayed in order in the selected area.
The one-shot output mode is canceled by pressing the key or the key.

Note

(1) Because the input signal (X, etc.) to the PLC is updated at the head of each PLC cycle, the machine immediately returns to the normal state, even if one-shot type forced output is carried out.
(2) When no data is set (Example: "X0048/","X0048"), the operation message "Setting Data not found" is displayed.
(3) The X, Y, R, and ZR devices are one-shot output for all projects.
(4) The devices other than X, Y, R, and ZR are one-shot output for the currently displayed project.

⚠ CAUTION

Pay close attention to the sequence operation when carrying out forced data setting (forced output) in the I/F diagnosis screen during machine operation.

4.4.2 List of Devices for PLC Uses

Devices	Device No.	No. of points (Maximum points of project)	Units	Description
X (*)	X0 to X1FFF	8192	1-bit	Input signals to PLC. Machine input, etc.
Y (*)	Y0 to Y1FFF	8192	1-bit	Output signals from PLC. Machine output, etc.
M	M0 to M61439	61440	1-bit	For temporary memory
L	L0 to L1023	1024	1-bit	Latch relay (Backup memory)
F	F0 to F2047	2048	1-bit	For temporary memory. Alarm message interface
SB	SB0 to SB3FF	1024	1-bit	Special relay for linking
B	B0 to BDFFF	57344	1-bit	Link relay
SM (*)	SM0 to SM2047	2048	1-bit	Special relay
V	V0 to V511	512	1-bit	Edge relay
SW	SW0 to SW3FF	1024	16-bit	Special register for linking
SD	SD0 to SD2047	2048	16-bit	Special register
TI	TI0 to TI2047	2048	1-bit	Timer contact
TO	TO0 to TO2047	2048	1-bit	Timer output
TS	TS0 to TS2047	2048	16-bit	Timer setting value
TA	TA0 to TA2047	2048	16-bit	Timer current value
STI	STI0 to STI127	128	1-bit	Integrated timer contact
STO	STO0 to STO127	128	1-bit	Integrated timer output
STS	STS0 to STS127	128	1-bit	Integrated timer setting value
STA	STA0 to STA127	128	16-bit	Integrated timer current value
CI	CI0 to CI511	512	1-bit	Counter contact
CO	CO0 to CO511	512	1-bit	Counter output
CS	CS0 to CS511	512	16-bit	Counter setting value
CA	CA0 to CA511	512	16-bit	Counter current value
D	D0 to D4095	4096	16-bit/32-bit	Data register, Register for calculation
R (*)	R0 to R32767	32768	16-bit/32-bit	File register, CNC word I/F
ZR (*)	ZR0 to ZR13311	13312	16-bit/32-bit	File register
W	W0 to W2FFF	12288	16-bit/32-bit	Link register

Note

(1) The use of devices marked with a * mark in the device column has been determined.
Do not use devices other than those corresponding to the input/output signals with the machine side (input/output signals of the remote I/O unit), even if it is an undefined vacant device.

Refer to the following manuals for details on device No.:
- M800V/M80V Series PLC Development Manual
- M800V/M80V Series PLC Programming Manual
- M800V/M80V Series PLC Interface Manual

Refer to the specifications issued by the MTB for machine-specific information.

4.5 Diagnosis Based on the Self Diagnosis Screen

4.5.1 Self Diagnosis Screen

Diagn – Selfdia

The hardware state and NC operation state can be confirmed by selecting the menu [Selfdia] on the diagnosis (Diagn) screen.

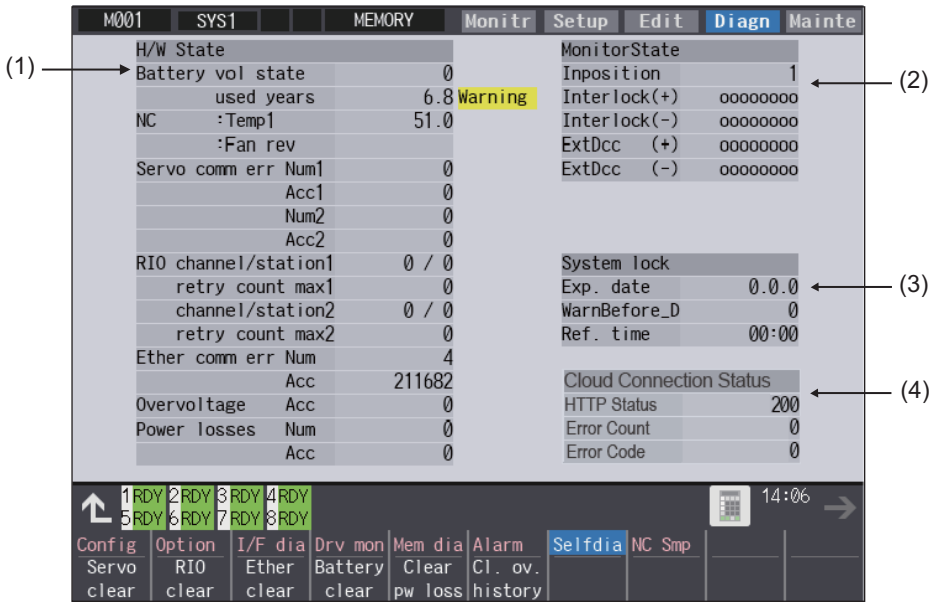

Display items

	Display items	Details
(1)	H/W state (common for part systems)	This displays the hardware state of the NC unit and display unit. (*1)
(2)	Operation state (Depends on part system)	This displays the state when the operation seems to be stopped in spite that the alarm does not occur. (*2)
(3)	System lock	When the system lock specification is valid, the following items are displayed. Exp. date: The expiration date of the machine WarnBefore_D: The number of days to display the warning before the expiration date Ref. time: The time to display the warning or an alarm This will not displayed when the system lock specification is invalid. Once the expiry date is passed, cycle start is disabled. You can set a new expiration date or cancel the currently set expiration date by entering the decryption code issued by the MTB.
(4)	Cloud server connection status	Connection status of the cloud server is displayed when the remote service is enabled.

(*1) As for the NC unit, the contents are as follows depending on the condition:

NC

Item	Details	
Battery vol state	This displays the current state of the battery voltage as 0 or 1.	
	Condition	**Class**
	0 (normal state)	-
	1 (encoder error) (no battery)	Warning (yellow)
Battery used years	This displays approximate time of the battery used from the last replacement.	
	Condition	**Class**
	Recommended battery use (5 years) <= Time for the battery used	Warning (yellow)
NC : temp. 1 (°C)	This displays the current temperature of the control unit.	
	Condition (M800VS: Main card/M80V)	**Class**
	82.0°C < Control unit temp. <= 84.5°C	Caution (gray)
	84.5°C < Control unit temp.	Warning (yellow)
	Condition (M800VW: Main card)	**Class**
	93.0°C < Control unit temp. <= 98.0°C	Caution (gray)
	98.0°C < Control unit temp.	Warning (yellow)
	Condition (M80VW: Main card)	**Class**
	97.0°C < Control unit temp. <= 102.0°C	Caution (gray)
	102.0°C < Control unit temp.	Warning (yellow)
Fan rev (r/min)	This displays the current fan rotation speed of the control unit.	
	Condition	**Class**
	Fan rot. speed <= 4000 r/min	Warning (yellow)

Communication between NC unit and display unit

Item	Details
Servo comm err Num1	This displays the count of occurrence for "Y51 SV commu er: Recv frame No. xx04" after the power ON.
Servo comm err Acc1	This displays the cumulated count of occurrence for " Y51 SV commu er: Recv frame xx04". Press the menu [Servo clear] to clear the cumulated count to "0".
Servo comm err Num2	This displays the count of occurrence for "Y51 SV commu er: Data ID error xx03" after the power ON.
Servo comm err Acc2	This displays the cumulated count of occurrence for "Y51 SV commu er: Data ID error xx03". Press the menu [Servo clear] to clear the cumulated count to "0".
RIO channel/station1	This displays the Channel No./Station No. of occurrence for continuous error after the power ON.
RIO retry count max 1	This displays the maximum value of the continuous error after the power ON.
RIO channel/station 2	This displays the Channel No./Station No. held even if the power OFF. Press the menu [RIO clear] to clear the Channel No./Station No. to "0/0".
RIO retry count max 2	This displays the count held even if the power OFF. Press the menu [RIO clear] to clear the count to "0".
Ether comm err Num	This displays the number of Ethernet communication error after PLC program is executed once.
Ether comm err Acc	This displays the cumulated count of occurrence for Ethernet communication error. Press the menu [Ether clear] to clear the cumulated count to "0".
Overvoltage Acc	This displays the cumulated count of detection frequency of overvoltage after the power ON. Press the menu [Cl. ov.history] to clear the cumulated count to "0".

Item	Details
Power losses Num	This displays the count of detection frequency of instantaneous power interruption after the power ON.
Power losses Acc	This displays the cumulated count of detection frequency of instantaneous power interruption after the power ON. Press the menu [Clear pw loss] to clear the cumulated count to "0".

(*2) The following state can be confirmed.

State	Details
In-position	This displays "1" (in-position state) when the following conditions are satisfied for even one axis. ♦There is a control axis whose acceleration/deceleration is not zero. ♦There is a control axis whose servo error exceeds the range designated with the parameter.
Interlock (+)	When the auto interlock +n-th axis signal or the manual interlock +n-th axis signal is OFF, "1" appears for the n-th axis. (Explanation of the display) o o o o o o 1 o 8th axis … 1st axis In the above case, the 2nd axis is interlocked. Even when the number of usable axes is less than 8 in 1 part system, this displays 8 axes fixed.
Interlock (-)	When the auto interlock -n-th axis signal or the manual interlock -n-th axis signal is OFF, "1" appears for the n-th axis. The explanation of the display is same as for the "Interlock (+)".
ExtDcc (+)	When the control axis is moving in (+) direction, "1" appears for the axis if the external deceleration speed is valid, and the feedrate is clamped, exceeding the set value of the external deceleration speed. (Explanation of the display) o o o o o 1 o 1 8th axis … 1st axis In the above case, the 1st axis and the 3rd axis are in external deceleration speed. Even when the number of usable axes is less than 8 in 1 part system, this displays 8 axes fixed.
ExtDcc (-)	When the control axis is moving in (-) direction, "1" appears for the axis if the external deceleration speed is valid, and the feedrate is clamped, exceeding the set value of the external deceleration speed. The explanation of the display is same as for the "ExtDcc(+)".

Menus

Menus	Details
Servo clear	This clears the cumulated count of the servo communication error 1 and 2 to "0".
RIO clear	This clears the cumulated count of the RIO communication error to "0".
Ether clear	This clears the cumulated count of the Ether communication error to "0".
Battery clear	This clears the time the battery has been used to "0".
Clear pw loss	This clears the accumulated number of instantaneous power interruption detection times to "0".
Cl. ov. history	This clears the cumulated count of overvoltage to "0".

Clearing the cumulated counter to zero

(Example) Clearing the cumulated count of the servo communication error

(1) Press the menu [Servo clear]. → An operation message appears.

(2) Press the [Y] or [INPUT] key. → The cumulated count of the servo communication error 1 and 2 will be cleared to "0".
When other keys are pressed, it will not clear to "0".

This also applies to menus [RIO clear], [Ether clear], [Battery clear], [Clear pw loss] and [Cl. ov.history].

Display of time limit warning and alarm

When designated date to display the expiration warning comes the warning message "Z64 Valid term soon to be expired" appears at the bottom right of the screen. At every cycle start after the NC power ON, this warning message appears until the designated warning-display time of the expiration date.

When the warning-display time has passed, the alarm message "Z65 Valid term has been expired" appears and cycle start cannot be performed. To cancel this alarm, enter the decryption code issued by MTB, and then turn OFF and ON the NC power.

Even when the expiration date has passed during the automatic operation, the NC continues to operate. However, after the NC once stops by cycle stop, single block stop or inputting a NC reset signal, cycle start cannot be performed.

For the display position of warning and alarm messages, refer to the "Instruction Manual".

While the warning is occurring, you can check the number of days remaining before the expiry date.
Open [Diagn] - [Alarm message] - [NC message] screen, then you can check the number of days. The remaining days will be "0" when the date reaches the expiration date.

If you open the [Alarm] screen while the alarm is occurring, "Valid term has been expired" appears. If you attempt a cycle start operation, the stop code "T01 Cycle st. prohibit (Term exp'd)" results, which disables cycle start operation.

Renewing time limit

For updating the time limit, users need to ask the MTB to issue a decryption code. The time limit is either updated or canceled when the decryption code is entered.

Decryption code is issued by MTB as decryption code file.

[How to enter decryption code]

(1) Save the decryption code file on an SD card (or USB memory).

(2) Insert the SD card into the control unit.

(3) Open the [Mainte] screen and select [Input/Output].

(4) In the [A:Dev] field, specify a memory card (or USB memory) in [Dev], a directory where the decryption code is stored in [Dir], and the created decryption code file name in [File].

(5) Select "Memory" in [B:Dev] and press [Dir]. Then the menu key [Decrypt code] appears on the screen. Then the menu key [Decrypt code] appears on the screen. When [Decrypt code] is pressed, "Decryption Code" automatically appears in [Dir] and "PASSCODE.DATA" in [File].
If you enter "/RLS" in [Dir], the screen will be displayed in the same way.

(6) Press [Trnsfr A-→B].

(7) When a confirmation message appears, press either [Y] or [INPUT].
If the decryption code has successfully been set, "Setting complete normally" appears.

- If the warning message is on the screen, this message will be removed.
- If the alarm message is on the screen, this message will be removed.
- If the decryption code is wrong, the message "Can't write file for dev B" will appear. Check the decryption code file and contact the MTB.
- The "Executing automatic operation" error occurs during program operation, and setting the code is disabled.

(8) Turn OFF and ON the NC power.

Precautions for expiry date

(1) If you turn OFF and ON the power after the time limit has expired, "EMG Emergency stop LINE" may appear at the same time.

(2) The warning message "Z64 Valid term soon to be expired" can be erased with NC reset. Contact the MTB for details.

4.6 Diagnosis Based on the Data Sampling Screen

Diagn – NC Smp

Sampling start/stop, sampling state display, setting the sampling parameters necessary for sampling are performed in the data sampling screen. The NC internal data (speed output from NC to the drive unit, or feedback data from the drive unit, etc.) can be sampled.

Sampling data can be displayed in waveform by channel.

Also, the sampling data can be output externally on the I/O screen on the maintenance (Mainte) screen.

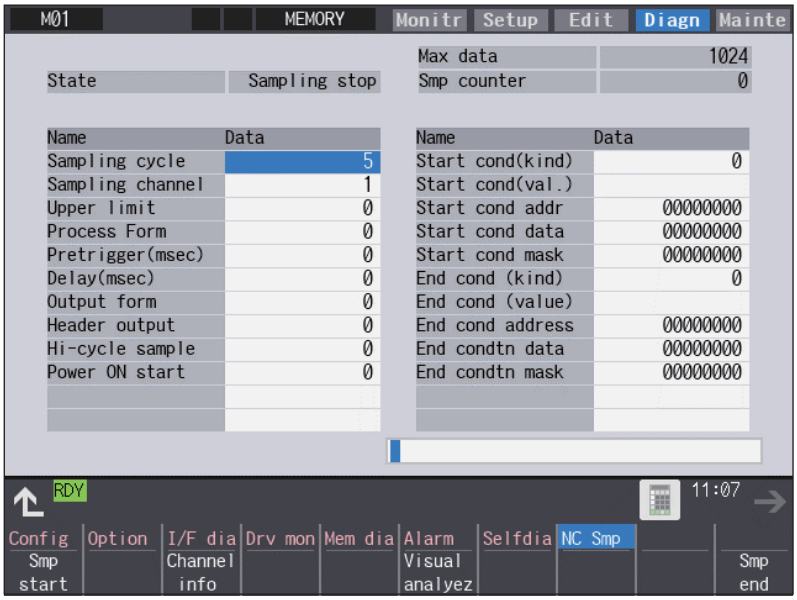

Sampling specifications

Sampling cycle	1.776 ms x Setting value
Number of sampled axes	NC axis: Maximum number of usable axes Spindle: Maximum number of usable spindles
Number of sampled channels	1 to 16 points 1 to 8 points for displayed in waveform
Number of sampled data items	Max. 2,620,416 points (M800VW/M800VS) Max. 655,360 points (M80VW/M80V)

Note

(1) The maximum number of sampled data items is the total number of data. When the number of sampled channels is increased, the number of data per channel will decrease.

4.7 Diagnosis Based on the Drive Monitor Screen

4.7.1 Drive Monitor Screen (Servo Unit)

Diagn – Drv mon

The various data related to the servo axis (NC axis, PLC axis) can be monitored by selecting the menus [Drv mon] -> [Servo unit] on the diagnosis (Diagn) screen.

Change the display item with PAGE / PAGE or ▲/▼ on the screen. ▲/▼ keys appear only when the screen has items on the next/previous page.

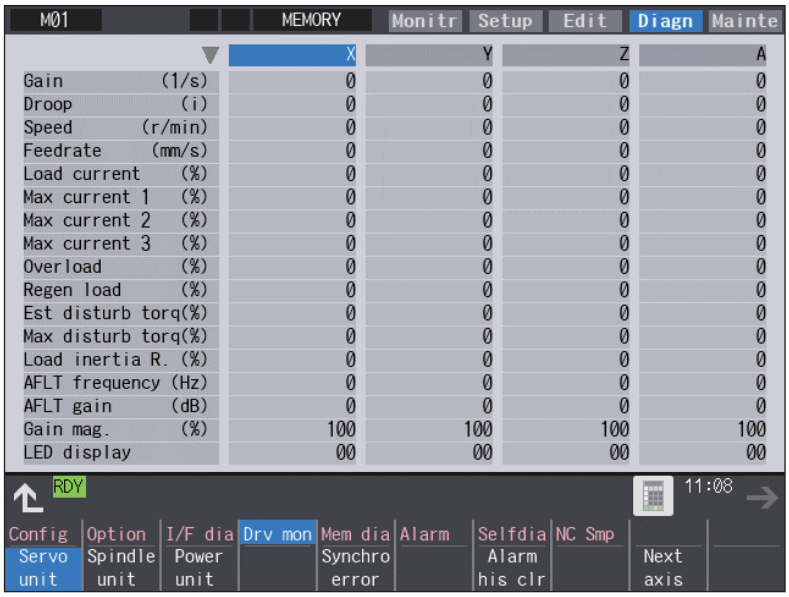

The axis name set in the base axis specification parameter "#1022 axname2" appears at the axis name.

Display items

Display items	Details
Gain (1/s)	This displays the position loop gain. The position loop gain is obtained by the following formula: $\frac{\text{Feedrate (mm/s)}}{\text{Tracking delay error (mm)}}$
Droop (i)	The error of the actual machine position to the command position is called droop. This error is proportional to command speed value. This follows the setting and display unit (#1003 iunit).
Speed (r/min)	This displays the actual rotation speed of motor. When a linear motor is used, the unit of feedrate (mm/s) is displayed.
Feedrate (mm/s)	This displays the feedrate on the machine side.
Load current (%)	This displays the FB value of the motor current in terms of continuous current during stalling.
Max current 1 (%)	This displays the motor current command in terms of continuous current during stalling. An absolute value of the current command peak value sampled after the power ON is displayed.

Display items	Details
Max current 2 (%)	This displays the motor current command in terms of continuous current during stalling. An absolute value of the current command peak value sampled in most recent 2 seconds is displayed.
Max current 3 (%)	This displays the FB value of the motor current in terms of continuous current during stalling. An absolute value of the current FB peak value sampled in most recent 2 seconds is displayed.
Overload(%)	This is the data used to monitor the overload of motor and drive unit.
Regen load (%)	This is the data used to monitor the resistance overload state when the resistance regenerative power supply is connected.
Est disturb torq (%)	This displays the estimated disturbance torque in terms of stall rated torque when the disturbance observer is valid.
Max disturb torq (%)	This displays the estimated disturbance torque in terms of stall rated torque when the collision detection function is adjusted. An absolute value of the estimated disturbance torque peak value sampled in most recent 2 seconds is displayed.
Load inertia R. (%)	This displays the estimated load inertia ratio when the collision detection function is adjusted. The ratio is displayed according to the parameter settings of "#1251 set23/bit0" and "#2235 V035/bitF".
AFLT frequency (Hz)	This displays the current operation frequency of the adaptive filter.
AFLT gain (dB)	This displays the current filter depth of the adaptive filter.
Gain mag. (%)	While Real-time tuning 1 is valid, the currently applied speed control gain is displayed with the magnification for the setting value of speed loop gain 1 (parameter "#2205 SP005 VGN1").
LED display	This displays the 7-segment LED of the driver.
Alarm	This displays the alarms and warnings other than the LED display (displayed on drive unit side).
Cycle counter (p)	This displays the position within one rotation of the encoder detector. The position is displayed within one rotation in the range of "0" to "RNG (movement units) × 1000" using the grid point value as "0".
Grid space	This displays the grid space for the reference position return. (Command unit)
Grid amnt	This displays the distance from the dog-off point to the grid point when the dog-type reference position return is displayed. The grid mask amount is not included. (Command unit)
Machine position	This displays the NC basic machine coordinate system position. (Command unit)
Motor end FB	This displays the feedback value of the motor side position detector. (Command unit)
Machine end FB	This displays the feedback position of the machine side position detector. (Command unit)
FB error (i)	This displays the error of the motor side FB and machine side FB. This follows the setting and display unit (#1003 iunit).
DFB compen amnt (i)	This displays the compensation pulse amount during dual feedback control. This follows the setting and display unit (#1003 iunit).
Remain command	The remaining movement distance of one block is displayed. (Command unit)
Current posn (2)	The value of the tool compensation amount subtracted from the current position is displayed. (Command unit)
Man int amt	The amount of interrupt movement in the manual absolute OFF state is displayed. (Command unit)
Abs pos command	The absolute position that does not include the machine error compensation amount is displayed. (Command unit)
Superimp syn er (mm)	This displays the current value of the synchronous error between the reference axis and the synchronized axis during control axis synchronization between part systems, control axis superimposition, or arbitrary axis superimposition.
Superimp err +P (mm)	This displays the maximum value of the distance in which the synchronized axis advances beyond the reference axis during control axis synchronization between part systems, control axis superimposition, or arbitrary axis superimposition.

Display items	Details
Superimp err -P (mm)	This displays the maximum value of the distance in which the synchronized axis lags behind the reference axis during control axis synchronization between part systems, control axis superimposition, or arbitrary axis superimposition.
Superimp errP-P (mm)	This displays the synchronous error width between the reference axis and the synchronized axis during control axis synchronization between part systems, control axis superimposition, or arbitrary axis superimposition.
Motor temp. (°C)	This displays the motor temperature of the servo motor. This item is not displayed when the parameter "#1760 cfgPR/bit4" is set to "1".
Power cycles (p)	This displays the power cycle counter. (Number of times)
Insul resist. (MOhm)	The insulation degradation status is displayed.
FAN1 rot. state (%)	The detected rotation speed of the unit cooling fan is displayed by converting it into percentage format (converted with the rated speed of the fan as 100%).
FAN2 rot. state (%)	The detected rotation speed of the unit cooling fan is displayed by converting it into percentage format (converted with the rated speed of the fan as 100%).
Battery voltage (V)	This displays the voltage of the connected battery.
AUX current sta No. (*1)	This displays the current station No.
AUX current posn (*1)	This displays the current coordinates position.
AUX inst station No. (*1)	This displays the command station No. of automatic operation or the nearest station No. to stop by manual operation etc.
AUX inst posn (*1)	This displays the coordinates position corresponding to target station No.
Mach err comp val	This displays the machine error compensation amount. (Command unit)
Rot/Spatial err comp	This displays the amount of rotation center error compensation and spatial error compensation.
Control input 1L	This indicates the control signal input from NC to servo. (bit0 to bit7) Bit0: READY ON command Bit1: Servo ON command Bit4: Position loop gain changeover command Bit6: Excessive error detection width changeover command Bit7: Alarm reset command
Control input 1H	This indicates the control signal input from NC to servo. (bit8 to bitF) Bit8: Current limit selection command
Control input 2L	This indicates the control signal input from NC to servo. (bit0 to bit7)
Control input 2H	This indicates the control signal input from NC to servo. (bit8 to bitF) Bit9: Speed monitor command valid BitA: In door closed (controller) BitB: In door closed (all drive units)
Control input 3L	This indicates the control signal input from NC to servo. (bit0 to bit7) Bit0: Control axis detachment command
Control input 3H	This indicates the control signal input from NC to servo. (bit8 to bitF)
Control input 4L	This indicates the control signal input from NC to servo. (bit0 to bit7)
Control input 4H	This indicates the control signal input from NC to servo. (bit8 to bitF)
Control input 5L	This indicates the control signal input from NC to servo. (bit0 to bit7)
Control input 5H	This indicates the control signal input from NC to servo. (bit8 to bitF)
Control input 6L	This indicates the control signal input from NC to servo. (bit0 to bit7) Bit0: OMR-FF control request
Control input 6H	This indicates the control signal input from NC to servo. (bit8 to bitF) Bit8: Drivers communication control request
Control output 1L	This indicates the control signal output from servo to NC. (bit0 to bit7) Bit0: In READY ON Bit1: In Servo ON Bit4: In position loop gain changeover Bit6: In excessive error detection width changeover Bit7: In alarm

Display items	Details
Control output 1H	This indicates the control signal output from servo to NC. (bit8 to bitF) Bit8: In current limit selection BitC: In-position BitD: In current limit BitE: In absolute position data loss BitF: In warning
Control output 2L	This indicates the control signal output from servo to NC. (bit0 to bit7) Bit0: Z-phase passed Bit3: In zero speed Bit7: In external emergency stop
Control output 2H	This indicates the control signal output from servo to NC. (bit8 to bitF) Bit9: In speed monitor BitA: In door closed (controller) BitB: In door closed (self drive unit)
Control output 3L	This indicates the control signal output from servo to NC. (bit0 to bit7) Bit0: In control axis detachment
Control output 3H	This indicates the control signal output from servo to NC. (bit8 to bitF)
Control output 4L	This indicates the control signal output from servo to NC. (bit0 to bit7)
Control output 4H	This indicates the control signal output from servo to NC. (bit8 to bitF)
Control output 5L	This indicates the control signal output from servo to NC. (bit0 to bit7)
Control output 5H	This indicates the control signal output from servo to NC. (bit8 to bitF)
Control output 6L	This indicates the control signal output from servo to NC. (bit0 to bit7) Bit0: In OMR-FF control
Control output 6H	This indicates the control signal output from servo to NC. (bit8 to bitF) Bit8: In drivers communication control
Detection system	This displays the detector type symbol of the absolute position detection system. ES: Semi-closed encoder EC: Ball screw side encoder LS: Linear scale MP: MP scale ESS: Semi-closed high-speed serial encoder ECS: Ball screw side high-speed serial encoder INC: Incremental
Power OFF posn	This displays the coordinate at NC power OFF in the basic machine coordinate system. (Command unit)
Power ON posn	This displays the coordinate at NC power ON in the basic machine coordinate system. (Command unit)
Current posn	This displays the current coordinate in the basic machine coordinate system. (Command unit)
R0	This displays the multi-rotation counter value of the detector stored in the memory during basic point setting.
P0	This displays the position within one rotation of the detector stored in the memory during basic point setting.
E0	This displays the absolute position error stored in the memory during basic point setting.
Rn	This displays the multi-rotation counter value of the current detector.
Pn	This displays the position within one rotation of the detector.
En	This displays the absolute position error during NC power OFF.
ABS0	This displays the absolute position reference counter.
ABSn	This displays the current absolute position.
MPOS	This displays the offset amount of the MP scale when the power is turned ON.
Unit type	This displays the servo driver type.
Unit serial No.	This displays the servo driver serial No.
Software version	This displays the servo side software version.

Display items	Details
Control method	SEMI: Semi-closed loop CLOSED: Closed loop DUAL: Dual feedback
Motor end detector	This displays the motor side detector type.
Motor end detect No.	This displays the motor side detector serial No.
Machine end detector	This displays the machine side detector type. The type is displayed when the control method is CLOSED or DUAL. * is displayed when the method is SEMI.
Mach. end detect No	This displays the machine side detector serial No.
Motor	This displays the motor type.
Work time	This displays the READY ON work time. (Units: 1 hr)
Alarm history 1: Time 1: Alarm 〜 8: Time 8: Alarm	This displays servo alarms that occurred in latest order with the following formats. Time: Work time when the alarm occurred Alarm No.: Number of the servo alarms that occurred
Maint hist 1 〜 Maint hist 4	This displays the maintenance dates. Year: One digit Month: 1 to 9, X (Oct.), Y (Nov.), Z (Dec.)
Maint status	This displays the maintenance status.

(*1) Data (station No./current position/command position) is displayed for axes of auxiliary axis state.
"-" is displayed for axes of non-auxiliary axis state (NC axis or during PLC axis control).

4.7.2 Drive Monitor Screen (Spindle Unit)

Diagn – Drv mon

The various data related to the spindle can be monitored by selecting the menus [Drv mon] -> [Spindle unit] on the diagnosis (Diagn) screen.

Change the display item with PAGE / PAGE or ▲/▼ on the screen. ▲/▼ keys appear only when the screen has items on the next/previous page.

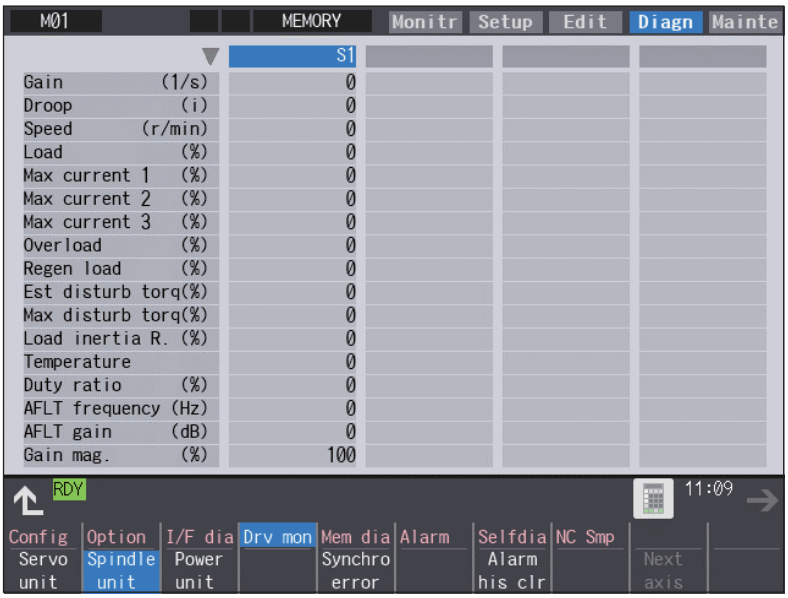

Display items

Display items	Details
Gain (1/s)	This displays the position loop gain. The position loop gain is obtained by the following formula: $\frac{\text{Feedrate (mm/s)}}{\text{Tracking delay error (mm)}}$
Droop (i)	The error of the actual machine position to the command position is called droop. This error is proportional to command speed value. (*1)
Speed (r/min)	This displays the actual rotation speed of motor.
Load (%)	This displays the motor load.
Max current 1 (%)	This displays the motor current command in terms of continuous current during stalling. An absolute value of the current command peak value sampled after the power ON is displayed.
Max current 2 (%)	This displays the motor current command in terms of continuous current during stalling. An absolute value of the current command peak value sampled in most recent 2 seconds is displayed.
Max current 3 (%)	This displays the FB value of the motor current in terms of continuous current during stalling. An absolute value of the current FB peak value sampled in most recent 2 seconds is displayed.
Overload(%)	This is the data used to monitor the overload of drive unit.
Regen load (%)	This is the data used to monitor the resistance overload state when the resistance regenerative power supply is connected.
Est disturb torq (%)	This displays the estimated disturbance torque in terms of stall rated torque when the disturbance observer is valid.

Display items	Details
Max disturb torq (%)	This displays the estimated disturbance torque in terms of stall rated torque when the collision detection function is adjusted. An absolute value of the estimated disturbance torque peak value sampled in most recent 2 seconds is displayed.
Load inertia R. (%)	This displays the estimated load inertia ratio when the collision detection function is adjusted. The ratio is displayed according to the parameter setting of "#1251 set23/bit0".
Temperature (°C)	This displays the thermistor temperature. The temperature is displayed according to the parameter settings of "#1251 set23/bit0" and "#13225 SP225/bit2".
Duty ratio (%)	This displays the equivalent load ratio of the spindle motor from cycle start of the program to the present.
AFLT frequency (Hz)	This displays the current operation frequency of the adaptive filter.
AFLT gain (dB)	This displays the current filter depth of the adaptive filter.
Gain mag. (%)	While Real-time tuning 1 is valid, the currently applied speed control gain is displayed with the magnification for the setting value of speed loop gain 1 (parameter "#13005 SP005 VGN1").
LED display	This displays the 7-segment LED of the driver.
Alarm	This displays the alarms and warnings other than the LED display (displayed on drive unit side).
Cycle counter (p)	This displays the position within one rotation of the encoder detector. The position is displayed within one rotation in the range of "0" to "RNG (movement units) × 1000" using the grid point value as "0".
Grid space	This displays the grid space for the reference position return. (Command unit) (*1)
Grid amnt	This displays the distance from the dog-off point to the grid point when the dog-type reference position return is displayed. The grid mask amount is not included. (Command unit) (*1)
Machine position	This displays the NC basic machine coordinate system position. (Command unit) (*1)
Motor end FB	This displays the feedback value of the motor side position detector (Command unit) (*1)
FB error (i)	This displays the error of the motor side FB and machine side FB. (*1)
DFB compen amnt (i)	This displays the compensation pulse amount during dual feedback control. (*1)
Tap error (mm) (*2)	This displays the current value of the synchronous error between the tapping spindle and the drilling axis during synchronous tapping. (When the parameter "#1041 Initial inch" is set to "1", "Tap error (inch)" is displayed.) (*1)
Tap error +P (mm) (*2)	This displays the maximum value of the distance in which the drilling axis advances beyond the tapping spindle during synchronous tapping. (When the parameter "#1041 Initial inch" is set to "1", "Tap error +P (inch)" is displayed.) (*1)
Tap error -P (mm) (*2)	This displays the maximum value of the distance in which the drilling axis lags behind the tapping spindle during synchronous tapping. (When the parameter "#1041 Initial inch" is set to "1", "Tap error -P (inch)" is displayed.) (*1)
Tap error P-P (mm) (*2)	This displays the synchronous error width between the spindle and the drilling axis during the synchronous tapping. (When the parameter "#1041 Initial inch" is set to "1", "Tap error -P (inch)" is displayed.) (*1)
Tap error (deg) (*2)	This displays the current value of the synchronous error angle between the tapping spindle and the drilling axis during synchronous tapping. (±99999.999 deg) (*1)
Tap error +P (deg) (*2)	This displays the maximum value of the angle at which the tapping spindle advances beyond the drilling axis during synchronous tapping. (±99999.999 deg) (*1)
Tap error -P (deg) (*2)	This displays the maximum value of the angle at which the tapping spindle lags behind the drilling axis during synchronous tapping. (±99999.999 deg) (*1)
Tap error P-P (deg) (*2)	This displays the synchronous error angle between the spindle and the drilling axis during the synchronous tapping. (deg) (*1)
SP sync error (deg)	This displays the current value of the synchronous error between the reference spindle and the synchronized spindle during spindle synchronization I, tool spindle synchronization IA/IB, or tool spindle synchronization II. (±99999.999 deg)

Display items	Details
SP sync err +P (deg)	This displays the maximum value of the angle at which the synchronized spindle advances beyond the reference spindle during spindle synchronization I, tool spindle synchronization IA/IB, or tool spindle synchronization II. (±99999.999 deg)
SP sync err -P (deg)	This displays the maximum value of the angle at which the synchronized spindle lags behind the reference spindle during spindle synchronization I, tool spindle synchronization IA/IB, or tool spindle synchronization II. (±99999.999 deg)
SP syn err P-P (deg)	This displays the synchronous error width between the reference spindle and the synchronized spindle during spindle synchronization I, tool spindle synchronization IA/IB, or tool spindle synchronization II. (±99999.999 deg)
SP syn phas er (deg)	This displays the phase difference stored in the memory by calculating the phase shift value. (±99999.999 deg)
SP sync ph1 FB (deg)	This displays the current value of the feedback phase difference that includes the phase difference stored in the memory by calculating the phase shift value during spindle synchronization I, tool spindle synchronization IA/IB, or tool spindle synchronization II. (±99999.999 deg)
SP sync ph2 FB (deg)	This displays the current value of the feedback phase difference that does not include the phase difference stored in the memory by calculating the phase shift value during spindle synchronization I, tool spindle synchronization IA/IB, or tool spindle synchronization II. (±99999.999 deg)
SP syn er comp (deg)	This displays the error compensation amount during spindle synchronization I, tool spindle synchronization IA/IB, or tool spindle synchronization II. (±99999.999 deg)
GB sync error (deg)	This displays the current value of the synchronous error between the reference spindle and the guide bushing spindle during guide bushing spindle synchronization. (±99999.999 deg)
GB sync err +P (deg)	This displays the maximum value of the distance in which the guide bushing spindle advances beyond the reference spindle during guide bushing spindle synchronization. (±99999.999 deg)
GB sync err -P (deg)	This displays the maximum value of the distance in which the guide bushing spindle lags behind the reference spindle during guide bushing spindle synchronization. (±99999.999 deg)
GB sync err P-P (deg)	This displays the synchronous error width between the reference spindle and the guide bushing spindle during guide bushing spindle synchronization. (±99999.999 deg)
Motor temp. (°C)	This displays the motor temperature.
Power cycles (p)	This displays the power cycle counter. (Number of times)
Insul resist. (MOhm)	The insulation degradation status is displayed.
FAN1 rot. state (%)	The detected rotation speed of the unit cooling fan is displayed by converting it into percentage format (converted with the rated speed of the fan as 100%).
FAN2 rot. state (%)	The detected rotation speed of the unit cooling fan is displayed by converting it into percentage format (converted with the rated speed of the fan as 100%).
Battery voltage (V)	This displays the battery voltage.
Control input 1L	This indicates the control signal input from NC to spindle. (bit0 to bit7) Bit0: READY ON command Bit1: Servo ON command Bit7: Alarm reset command
Control input 1H	This indicates the control signal input from NC to spindle. (bit8 to bitF) Bit8 to BitA: Torque limit selection command
Control input 2L	This indicates the control signal input from NC to spindle. (bit0 to bit7)
Control input 2H	This indicates the control signal input from NC to spindle. (bit8 to bitF) Bit9: Speed monitor command valid BitA: In door closed (controller) BitB: In door closed (all drive unit)
Control input 3L	This indicates the control signal input from NC to spindle. (bit0 to bit7)
Control input 3H	This indicates the control signal input from NC to spindle. (bit8 to bitF)

Display items	Details
Control input 4L	This indicates the control signal input from NC to spindle. (bit0 to bit7) Bit0 to Bit2: Spindle control mode selection command Bit4: In gear changeover command Bit5 to Bit6: Gear selection command
Control input 4H	This indicates the control signal input from NC to spindle. (bit8 to bitF) BitC: M coil selection command BitD: L coil selection command BitE: Sub-motor selection command
Control input 5L	This indicates the control signal input from NC to spindle. (bit0 to bit7)
Control input 5H	This indicates the control signal input from NC to spindle. (bit8 to bitF) BitB: Minimum excitation 2 changeover request BitC: Speed gain set 2 changeover request BitD: Zero point re-detection request BitE: Increase holding power of spindle
Control input 6L	This indicates the control signal input from NC to spindle. (bit0 to bit7) Bit0: OMR-FF control request
Control input 6H	This indicates the control signal input from NC to spindle. (bit8 to bitF) Bit8: Drivers communication control request
Control output 1L	This indicates the control signal input from spindle to NC. (bit0 to bit7) Bit0: In READY ON Bit1: In Servo ON Bit7: In alarm
Control output 1H	This indicates the control signal input from spindle to NC. (bit8 to bitF) Bit8 to BitA: In torque limit selection BitC: In-position BitD: In torque limit BitF: In warning
Control output 2L	This indicates the control signal input from spindle to NC. (bit0 to bit7) Bit0: Z phase passed Bit3: In zero speed Bit7: In external emergency stop
Control output 2H	This indicates the control signal input from spindle to NC. (bit8 to bitF) Bit9: In speed monitor BitA: In door closed (controller) BitB: In door closed (self drive unit)
Control output 3L	This indicates the control signal input from spindle to NC. (bit0 to bit7)
Control output 3H	This indicates the control signal input from spindle to NC. (bit8 to bitF)
Control output 4L	This indicates the control signal input from spindle to NC. (bit0 to bit7) Bit0 to Bit2: In spindle control mode selection Bit4: In gear changeover command Bit5 to Bit6: In gear selection Bit7: Magnetic pole position not set
Control output 4H	This indicates the control signal input from spindle to NC. (bit8 to bitF) BitD: In L coil selection
Control output 5L	This indicates the control signal input from spindle to NC. (bit0 to bit7) Bit0: Current detection Bit1: Speed detection Bit6: In coil changeover
Control output 5H	This indicates the control signal input from spindle to NC. (bit8 to bitF) Bit9: 2nd speed detection BitB: In minimum excitation rate 2 selection BitC: In speed gain set 2 selection BitD: Zero point re-detection complete BitF: In 2nd in-position
Control output 6L	This indicates the control signal input from spindle to NC. (bit0 to bit7) Bit0: In OMR-FF control

Display items	Details
Control output 6H	This indicates the control signal input from spindle to NC. (bit8 to bitF) Bit8: In drivers communication control
Unit type	This displays the spindle type.
Unit serial No.	This displays the spindle serial No.
Software version	This displays the software No. and version on the spindle side.
Motor end detect No	This displays the motor side detector serial No.
Mach. end detect No	This displays the machine side detector serial No.
Motor	It displays the motor type which is set for the spindle specification parameter "#3138 motor_type". The maximum of 26 words are displayed with 2 lines and left aligned.
Work time	This displays the READY ON work time. (Units: 1 hr)
Alarm history 1: Time 1: Alarm 〜 8: Time 8: Alarm	This displays servo alarms that occurred in latest order with the following formats. Time: Work time when the alarm occurred Alarm No.: Number of the servo alarms that occurred
Maint hist 1 〜 4	This displays the maintenance dates. Year: One digit Month: 1 to 9, X (Oct.), Y (Nov.), Z (Dec.)
Maint status	This displays the maintenance status.

(*1) These follow the setting and display unit (#1003 iunit) of the 1st part system.

(*2) Synchronous tapping error

This displays the maximum values of the synchronous tapping error that occur during the synchronous tapping.
The synchronous tapping error means the motor tracking delay for the commanded positions of the spindle and the tapping axis.
The positive synchronous tapping error means that the tapping axis is delayed responding to the spindle, and the negative synchronous tapping error means that the spindle is delayed responding to the tapping axis.

Data name	Details
Synchronous tapping error width (Max value)	♦This outputs the data of which absolute value is the largest among the synchronous tapping error width (-99999.999 to 99999.999 mm) during the synchronous tapping modal. ♦This data will be initialized to "0" when entering the synchronous tapping modal or restoring the power. Other than that, the data continues to display the maximum value.
Synchronous tapping error angle (Max value)	♦This outputs the data of which absolute value is the largest among the synchronous tapping error angle (-99999.999 to 99999.999°) during the synchronous tapping modal. ♦This data will be initialized to "0" when entering the synchronous tapping modal or restoring the power. Other than that, the data continues to display the maximum value.

4.7.3 Drive Monitor Screen (Power Supply Unit)

Diagn – Drv mon

The various data related to the power supply can be monitored by selecting the menus [Drv mon] -> [Power unit] on the diagnosis (Diagn) screen.

Change the display item with PAGE / PAGE or ▲/▼ on the screen. ▲/▼ keys appear only when the screen has items on the next/previous page.

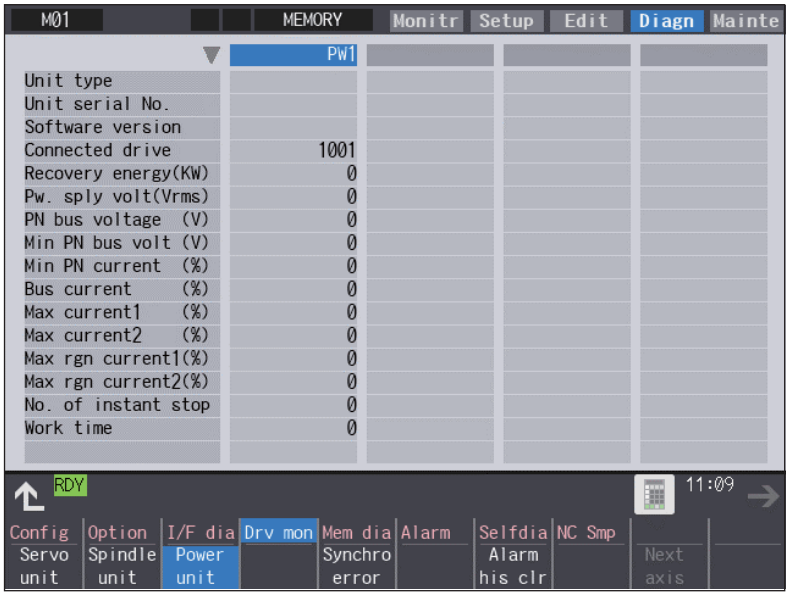

Display items

Display items	Details
Unit type	This displays the power supply unit type.
Unit serial No.	This displays the serial No. of the power supply unit.
Software version	This displays the software version.
Connected drive	This displays the I/F channel No. (mcp_no, smcp_no) of the drive unit connected to each power supply unit.
Recovery energy (KW)	This displays the regenerative power every two seconds. (0 to 999 kW)
Pw. sply volt (Vrms)	This displays the effective value of the power supply voltage. (0 to 999 Vrms)
PN bus voltage (V)	This displays PN bus voltage. (0 to 999V)
Min PN bus volt (V)	This displays the minimum PN bus voltage after the NC power ON. (0 to 999V)
Min PN current (%)	This displays the bus current when PN bus voltage is at minimum. (driving: +, regenerative: -) (0 to 999%)
Bus current (%)	This displays the bus current. (driving: +, regenerative: -) (0 to 999%)
Max current1 (%)	This displays the maximum driving current after the NC power ON. (0 to 999%)
Max current2 (%)	This displays the maximum driving current in most recent 2 seconds. (0 to 999%)
Max rgn current1 (%)	This displays the maximum regenerative current after the NC power ON. (0 to 999%)
Max rgn current2 (%)	This displays the maximum regenerative current in most recent 2 seconds. (0 to 999%)
No. of instant stop	This displays the number of instantaneous power interruption exceeding 1 cycle of the power. (0 to 9999 times)
Work time	This displays the READY ON work time. (Units: 1 hr)
Power-run pwr (kW)	The power-run power is calculated and displayed. (0.01 kW)

Display items	Details
Regenerate pwr (kW)	The regenerated power is calculated and displayed. (0.01 kW)
Consumed power (kW)	The power consumption is calculated and its integrated value is displayed. (0.01 kWh)
Pwr. distortion (V)	The amount of power distortion (harmonic voltage value) is calculated and displayed. (V)
Supplied power (kW)	The supplied power is calculated and displayed. (kW)
Accum. power (kWh)	The accumulated power is calculated and displayed. (kWh)
Harmonic volt. (V)	The power line harmonic voltage is displayed. (V)
CV margin (%)	The CV margin is calculated and displayed. (%)
FAN1 rot. state (%)	The detected rotation speed of the unit cooling fan is displayed by converting it into percentage format (converted with the rated speed of the fan as 100%).
FAN2 rot. state (%)	The detected rotation speed of the unit cooling fan is displayed by converting it into percentage format (converted with the rated speed of the fan as 100%).
Alarm history 1: Time 1: Alarm 〜 8: Time 8: Alarm	This displays servo alarms that occurred in latest order with the following formats. Time: Work time when the alarm occurred Alarm No.: Number of the servo alarms that occurred
Maint hist 1 〜 4	This displays the maintenance dates. Year: One digit Month: 1 to 9, X (Oct.), Y (Nov.), Z (Dec.)
Maint status	This displays the maintenance status.

4.7.4 Drive Monitor Screen (Synchronous Error)

Diagn – Drv mon

The "Synchronous error" appears only when the synchronous control axis specification is valid.
The various data related to the synchronous error can be monitored by selecting the menus [Drv mon] -> [Synchro error] on the diagnosis (Diagn) screen.

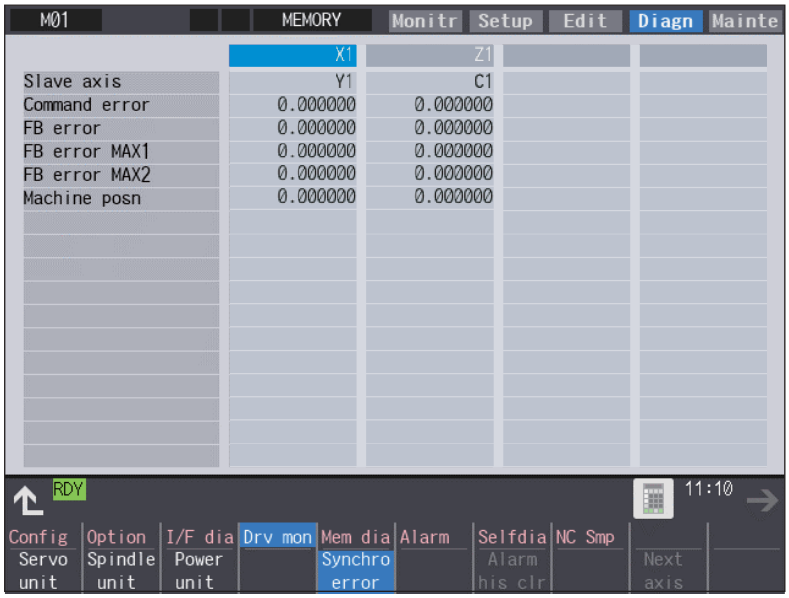

Display items

Display items	Details
Slave axis	This displays the slave axis name which is controlled following the master axis. The axis name corresponding to the axis No. set in the axis specification parameter "#1068 slavno" (slave axis No.) is displayed. The name set in the base axis specification parameter "#1022 axname2" (2nd axis name) is displayed for the slave axis.
Command error	This is the deviation of the slave axis machine position in respect to the master axis. The error of the commanded position to the servo control section before pitch error compensation, relative position compensation and backlash compensation is displayed. If this error occurs, the parameters that should be the same for the synchronous axes are different. Command error = Command s - command m -Δ Command s: Slave axis commanded position Command m: Master axis commanded position Δ: Command s - command m at start of synchronous control
FB error	This is the deviation of the slave axis feedback position in respect to the feedback position from the master axis servomotor. The actual error of the machine position is displayed. The synchronous error check is carried out on this error. FB error = FBs - FBm - Δ FBs: Slave axis feedback position FBm: Master axis feedback position Δ: FBs - FBm at start of synchronous control
FB error MAX1	This displays the maximum FB error after the start of the synchronous control.
FB error MAX2	This displays the maximum FB error approx. every 30 seconds after the start of the synchronous control.
Machine position	This displays the commanded machine position for the master axis.

4.7.5 Clearing the Alarm History on Drive Monitor Screen

Diagn –

Operation method

(1) Press the menu [Servo unit], [Spindle unit] or [Power unit].

(2) Using the menu [Next axis], tab keys |← and →|, select the axis (device) from which to clear the alarm history.

(3) Press the menu [Alarm his clr]. ➡ The menu is highlighted, and a message appears to confirm the erasing.
The alarm history1: Time appears at the head.

(4) Press the [Y] key. ➡ All alarm history data for the selected axis (device) are cleared to "0".

4.8 NC Memory Diagnosis Screen

Diagn – Mem dia

The NC internal data can be displayed and rewritten on the NC memory diagnosis (Mem dia) screen of the diagnosis (Diagn) screen. The custom API library's NC data read/write interface is used to display and rewrite the NC's internal data. The contents of the NC data can be displayed by designating the part system No., section No., sub-section No. and axis No. on this screen.

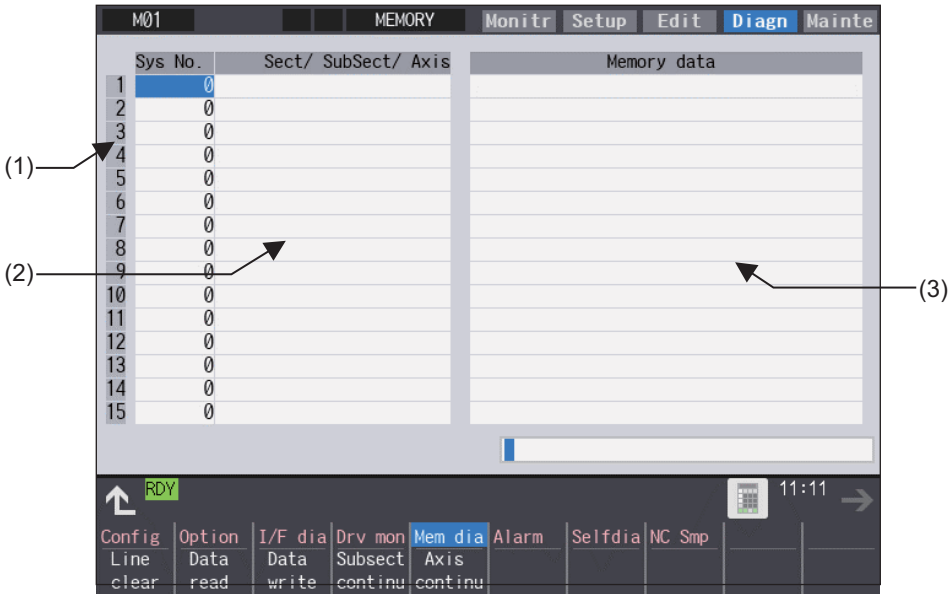

Display items

Display items		Details
(1)	Index No.	This displays the registration No. of the NC memory data. When one of the "2. Data contents" is set, the number is highlighted indicating that the normal display of the data contents has stopped.
(2)	Data contents	Part system No. Designate the part system No. (1: 1st part system). Designate "0" to designate the data common for the part systems. Section/sub-section/axis: Designate the section No., sub-section No. and axis No. of the data to be set and displayed. The setting format is, section No./sub-section No./axis No. <Note> ♦The axis No. "1" is handled as the first axis. Designate "0" for the data which does not require an axis designation.
(3)	Memory data	This displays the contents of the data.

Menus

Menus	Details
Line clear	This erases the information in the line where the cursor is. (One entire line becomes blank.) The cursor does not move at this time.
Data read	The contents of the set address data (Part system No, Section/sub-section/axis) for all the lines are constantly displayed. The Index No. highlight (indicating data is being set) is released. The cursor appears in "Sys. No." of that line.
Data write	This writes the data in the setting area to the NC memory indicated by address data at the cursor position. (*1) The Data No. highlight (indicating data is being set) is released, and constant display is started. After writing, the cursor moves to "Sys. No." of the next line.
Subsect continu	Based on the data of the address data where the cursor is, this displays the continuous data to which the sub-section No. has been added to the address data from the line where the cursor is. The cursor moves to "Sys. No." of that line.
Axis continu	Based on the data of the address data where the cursor is, this displays the continuous data to which the axis No. has been added to the address data from the line where the cursor is. The cursor moves to "Sys. No." of that line.

(*1) Decimal, hexadecimal, floating point data and character string data writing is possible. Note that hexadecimal, floating point data and character strings may not be settable depending on the data.
Decimal: Integers without decimal points (Example) -1234
Hexadecimal: An "H" is necessary at the end (Example) 1234H
Floating point data: Data with a decimal point (Example) -12.3
Character string data: Character string (Example) X

4.9 Safety Observation Screen

Diagn – Safety

The configuration, signal status, drive status and version in use of the smart safety observation function are displayed on the safety observation screen.

4.9.1 Safety Observation Screen (Configuration Diagnosis)

The available/unavailable states of the smart safety observation function are displayed on the configuration diagnosis screen.

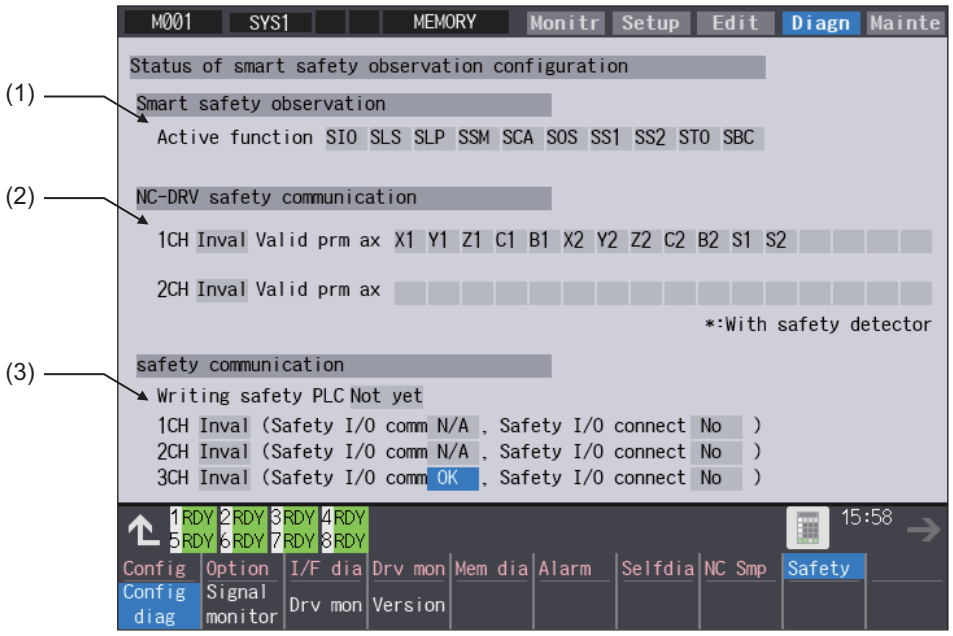

Display items

Display items	Details
(1) Active function	The drive safety functions which are enabled with the parameters are highlighted. SIO: Safety-related I/O observation, emergency stop observation SLS: Safety-limited speed observation SLP: Safety-limited position observation SSM: Safe speed monitor SCA: Safe cam SOS: Safe operating stop observation SS1: Safe stop 1 SS2: Safe stop 2 STO: Safe torque OFF SBC: Safe brake control
(2) NC-DRV safety communication	This displays the safety communication status of the drive unit. To perform the safety drive communication, the smart safety observation target axis needs to be set by the parameter, and the connected channel with the drive unit needs to be optical communication and configured only with drive units MDS-E Series. Valid prm ax: Out of the axes connected to each channel, the axes that the parameter "#51101 SF_Disable" (Disable smart safety observation) is OFF are highlighted. For the axis with safety encoder, "*" appears at the top of the axis name.

Display items	Details
(3) NC-I/O safety communication	This displays the communication status of the safety I/O communication. To perform the safety I/O communication, at least one of remote I/O channels needs to be configured with the safety I/O devices (safety remote I/O unit, operation panel equipped with safety I/Os) and RIO2.0 unit alone. Writing safety PLC: This displays the status (Done/Not yet) whether the PLC ladder for safety is written. Safety I/O comm: "OK" is displayed when the channel is configured only with RIO2.0 units. Safety I/O connect: "Yes" is displayed when connected to the safety I/O devices (safety RIO unit, operation panel equipped with safety I/O).

Menus

Menus	Details
Config diag	This switches the screen to the configuration diagnosis display of the smart safety observation.
Signal monitor	This switches the screen to the signal monitor display of the smart safety observation.
Drive monitor	This switches the screen to the drive monitor display of the smart safety observation.
Version	This switches the screen to the version display of the smart safety observation.
Servo unit	This switches the drive monitor diagnosis information to the servo unit information. Only when the drive monitor is displayed, the menu appears, and the operation can be performed.
Spindle unit	This switches the drive monitor diagnosis information to the spindle unit information. Only when the drive monitor is displayed, the menu appears, and the operation can be performed.
Next axis	This switches the axis to be displayed on the drive monitor. Only when the number of axes is five or more on the drive monitor screen, the menu appears, and the operation can be performed.

4.9.2 Safety Observation Screen (Signal Monitor)

The signal monitor screen displays the safety PLC signal status. The safety PLC signal displays both of the duplex PLC signals to identify the incongruous state. With the initial display, the input/output signal status from the device "X0000" is displayed on the left side and the input/output signals from the device "Y0000" is displayed on the right side.
Note that because time differences occur between the PLC signal change and the signal display, there may be a delay in the display. The machine may also not be able to correspond to extremely brief signal changes.

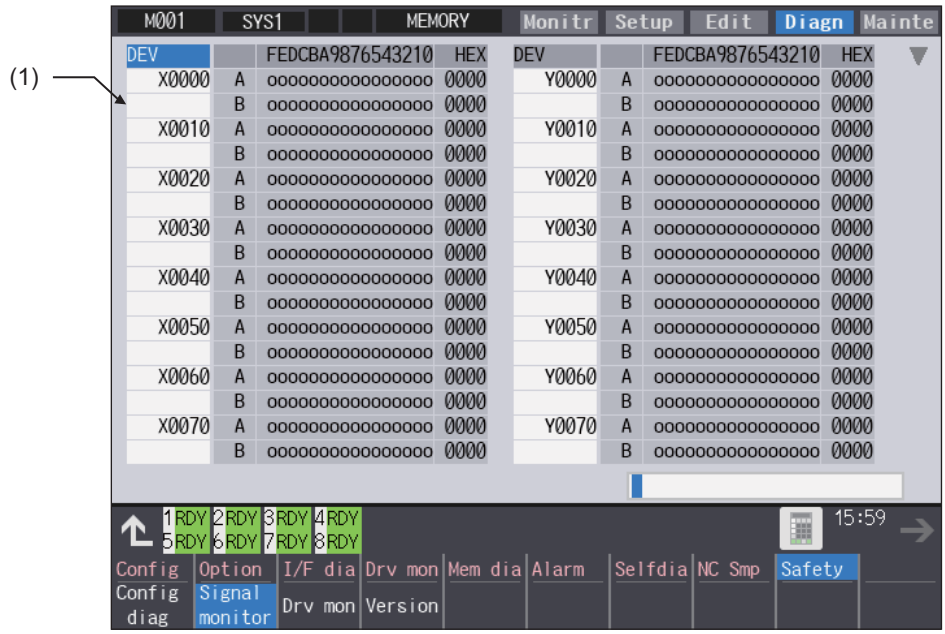

Display items

Display items		Details
(1)	Device No. and input/output signal value (binary/hexadecimal display)	This displays the duplex safety PLC signals (A, B) from the designated device No. in order. The input/output signal is displayed in binary and hexadecimal (bitwise). The device to be displayed can be switched individually for the left area and right area. The operation target (right or left) can be switched with the [←] and [→] keys. The head device and the operation target area are held until the power OFF. The displayable devices are X, Y, and ZR. If there is a comparison error with duplex safety PLC signals, the background color becomes yellow.

List of displayable PLC devices

Devices	Device No.	No. of points	Units	Details
X	X0 to X1FF	512	1-bit	Input signals to PLC, machine input, etc.
Y	Y0 to Y1FF	512	1-bit	Output signals from PLC, machine output, etc.
ZR	ZR0 to ZR3071	3072	16-bit	File register, CNC word I/F

Displaying the PLC device input/output signal

To refer the arbitrary input/output signal status, enter the target device No. to the input area, and the display will be switched.

(Example) For displaying the input/output signal of the arbitrary device No. "X0020"

(1) Press the tab key |← or →| to select the area where the data is displayed.

(2) Set the device No. (X0020), and then press the [INPUT] key.

Note

(1) Setting a device No. which exceeds the specification or setting an illegal address causes a setting error.

Changing the display with the page keys

The operation target device Nos. change in page unit when PAGE / PAGE or ▲/▼ on the screen is pressed. Changing of the pages stops within the range of device numbers of which the device has. ▲/▼ keys appear only when the screen has items on the next/previous page.

4.9.3 Safety Observation Screen (Drive Monitor)

The safety communication state with servo drive (NC axis, PLC axis) and spindle drive can be monitored. Only the safety drive communication parameter enabled axes are displayed on this screen.

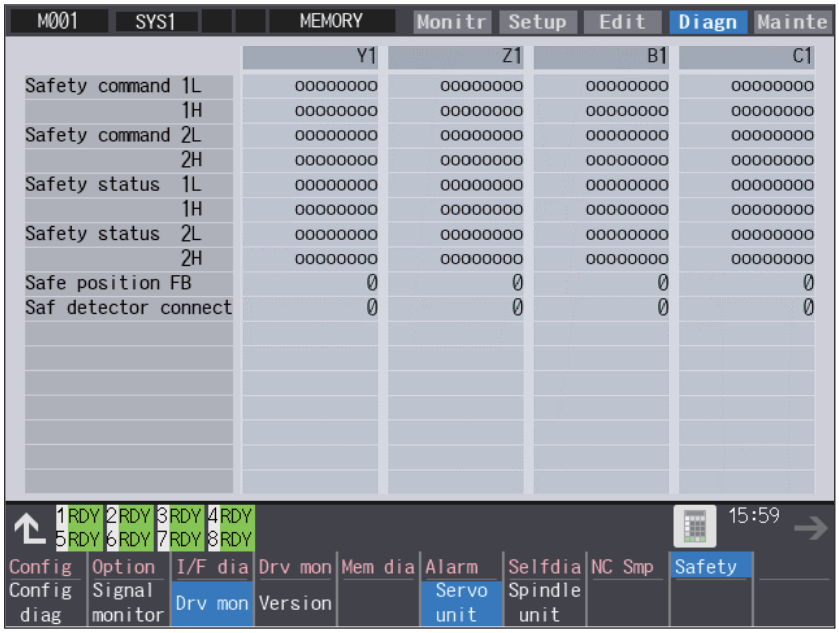

Display items

Display items	Details
Safety command 1L	This displays the data sent to the drive.
Safety command 1H	

	Bit	Details
1L	0	STO command (0: No command, 1: With command)
	1	
	2	
	3	
	4	
	5	
	6	
	7	
1H	8	
	9	
	A	
	B	
	C	
	D	
	E	
	F	

<table>
<tr><th>Display items</th><th>Details</th></tr>
<tr><td>Safety command 2L
Safety command 2H</td><td>This displays the data sent to the drive.
<table>
<tr><th></th><th>Bit</th><th>Details</th></tr>
<tr><td rowspan="8">2L</td><td>0</td><td></td></tr>
<tr><td>1</td><td></td></tr>
<tr><td>2</td><td>SBC command (0: No command, 1: With command)</td></tr>
<tr><td>3</td><td>SBC command for SBT (1CH side) (0: No command, 1: With command)</td></tr>
<tr><td>4</td><td>SBC command for SBT (2CH side) (0: No command, 1: With command)</td></tr>
<tr><td>5</td><td></td></tr>
<tr><td>6</td><td></td></tr>
<tr><td>7</td><td></td></tr>
<tr><td rowspan="8">2H</td><td>8</td><td></td></tr>
<tr><td>9</td><td></td></tr>
<tr><td>A</td><td></td></tr>
<tr><td>B</td><td></td></tr>
<tr><td>C</td><td></td></tr>
<tr><td>D</td><td></td></tr>
<tr><td>E</td><td></td></tr>
<tr><td>F</td><td></td></tr>
</table></td></tr>
<tr><td>Safety status 1L
Safety status 1H</td><td>This displays the data received from the drive.
<table>
<tr><th></th><th>Bit</th><th>Details</th></tr>
<tr><td rowspan="8">1L</td><td>0</td><td>STO status (0: No operation, 1: In operation)</td></tr>
<tr><td>1</td><td></td></tr>
<tr><td>2</td><td></td></tr>
<tr><td>3</td><td></td></tr>
<tr><td>4</td><td></td></tr>
<tr><td>5</td><td></td></tr>
<tr><td>6</td><td></td></tr>
<tr><td>7</td><td></td></tr>
<tr><td rowspan="8">1H</td><td>8</td><td></td></tr>
<tr><td>9</td><td></td></tr>
<tr><td>A</td><td></td></tr>
<tr><td>B</td><td></td></tr>
<tr><td>C</td><td></td></tr>
<tr><td>D</td><td></td></tr>
<tr><td>E</td><td></td></tr>
<tr><td>F</td><td></td></tr>
</table></td></tr>
</table>

<table>
<tr><th>Display items</th><th>Details</th></tr>
<tr><td>Safety status 2L</td><td rowspan="3">This displays the data received from the drive.
<table>
<tr><th></th><th>Bit</th><th>Details</th></tr>
<tr><td rowspan="8">2L</td><td>0</td><td></td></tr>
<tr><td>1</td><td></td></tr>
<tr><td>2</td><td>SBC status (0: No operation, 1: In operation)</td></tr>
<tr><td>3</td><td>SBC status for SBT (1CH side) (0: No operation, 1: In operation)</td></tr>
<tr><td>4</td><td>SBC status for SBT (2CH side) (0: No operation, 1: In operation)</td></tr>
<tr><td>5</td><td></td></tr>
<tr><td>6</td><td></td></tr>
<tr><td>7</td><td></td></tr>
<tr><td>Safety status 2H</td><td rowspan="8">2H</td><td>8</td><td></td></tr>
<tr><td>9</td><td></td></tr>
<tr><td>A</td><td></td></tr>
<tr><td>B</td><td></td></tr>
<tr><td>C</td><td></td></tr>
<tr><td>D</td><td></td></tr>
<tr><td>E</td><td></td></tr>
<tr><td>F</td><td></td></tr>
</table></td></tr>
<tr><td>Safe position FB</td><td>This displays the encoder position information from the drive to NC.</td></tr>
<tr><td>Saf detector connect</td><td>This displays the safety encoder connection status.
0: No connection
1: With connection</td></tr>
<tr><td>Safety status 2L</td><td>This displays the data received from the drive.</td></tr>
</table>

4.9.4 Safety Observation Screen (Version Display)

Software version about smart safety observation is displayed on the version display screen.

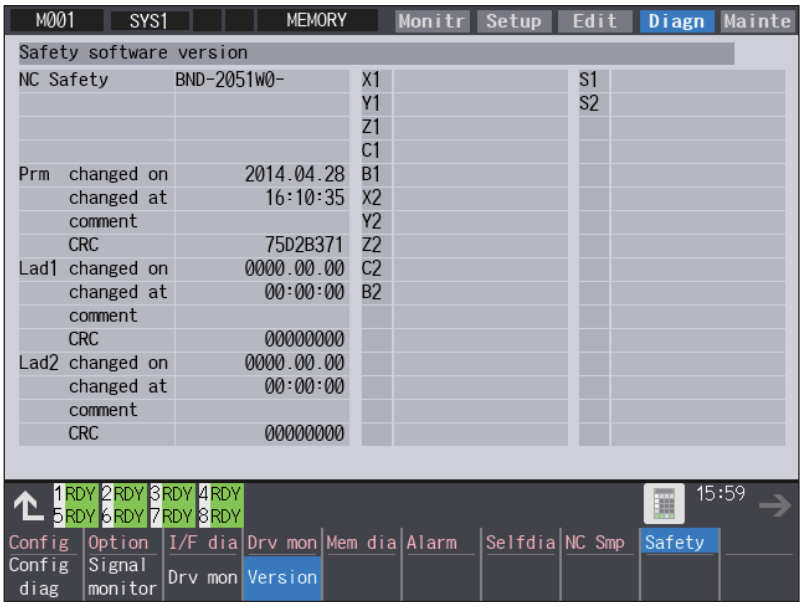

Display items

Display items	Details
NC Safety	This displays the smart safety observation software version of the NC system.
Parameters	This displays the safety parameter changed date and time, comment and CRC.
Lad 1, 2	This displays the safety PLC ladder 1, 2 changed date and time, comment and CRC.
Servo axis (up to 32 axes)	This displays the safety software version of servo axis. The version only for axis of the safety servo unit is displayed. Change the display item with PAGE / PAGE or ▲/▼ on the screen. ▲/▼ keys appear only when the screen has items on the next/previous page.
Spindle (up to 8 spindles)	This displays the safety software version of spindle. The version only for spindle of the safety spindle unit is displayed.

4.10 Servo Diagnosis Screen

Mainte –

You can confirm the following information on the servo diagnosis screen by pressing [Mainte] -> [Servo diagn] on the diagnosis (Diagn) screen:
- The number of alarms of servo/spindle drive unit
- DA output information
- PLG diagnosis (spindle)
- The maintenance diagnosis information of servo/spindle unit such as alarm cause counter

This operation is protected according to the operation level.

■Servo unit

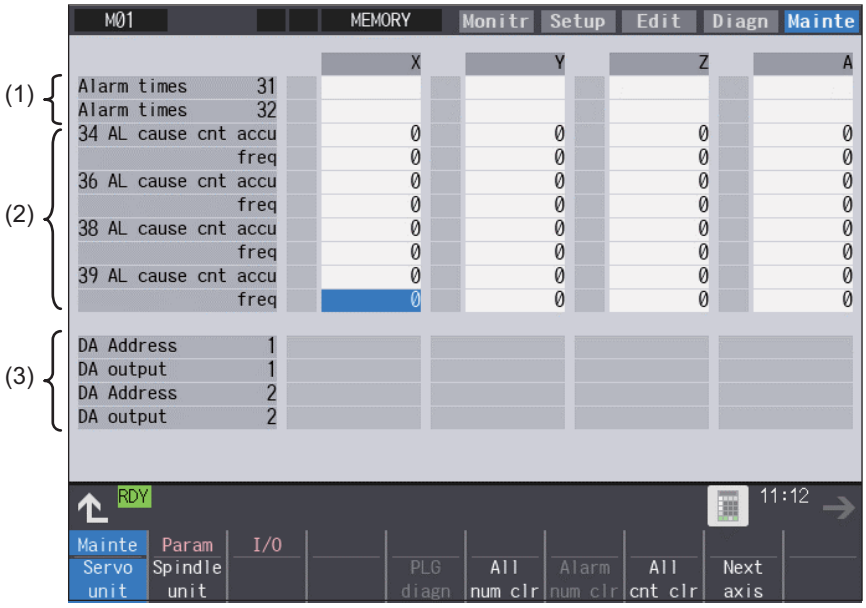

■Spindle unit

(1) Display of the DA output data

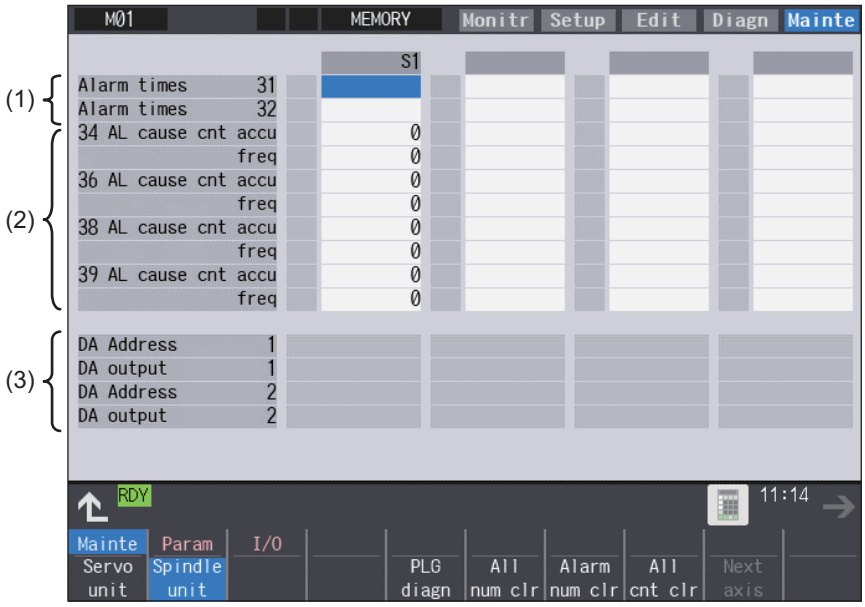

(2) Display of the spindle PLG diagnosis information

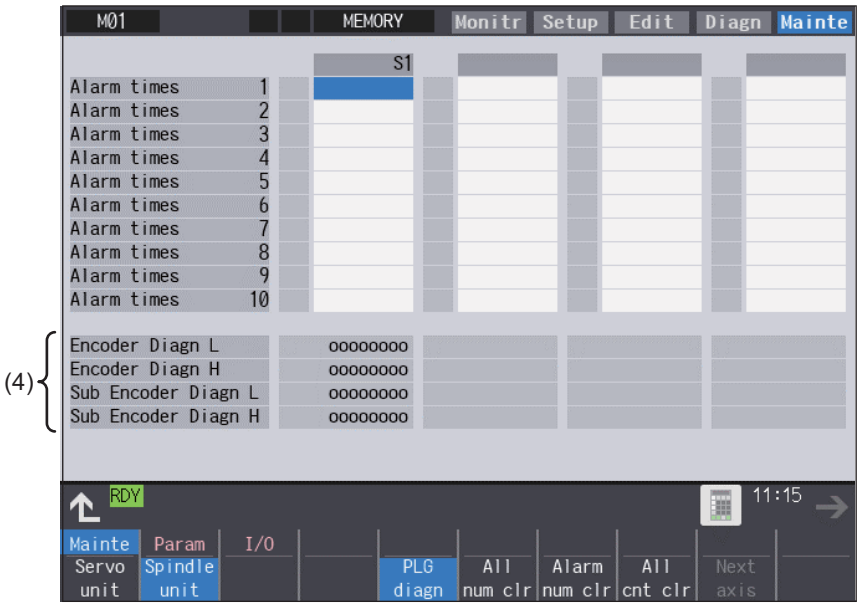

Display items

Display items	Details
(1) Alarm times	This displays the data for each axis or unit. There are Alarm times 1 to 32, and there are switched with the page up/down keys. The number of times can be cleared for each axis or each column. Alarm No: Servo alarm No. (unit: ASCII) No. of times: The number of times of meeting the servo alarm condition after the servo drive unit ON. (Units: Number of times)
(2) Alarm cause counter	An alarm occurs when the specified number of conditions are met. This counter displays the number of times in which the alarm occurrence condition is met since the drive unit power was turned ON. The number of times can be cleared for each axis with [All cnt clr]. accu: Displays the number of times in which the alarm occurrence condition was met since the drive unit power was turned ON. freq: Displays the peak hold value when the alarm occurrence condition is met per constant cycle.
(3) DA output	This displays the data for each axis or unit. DA Address 1: Servo parameter sv061 set value (address) (unit: ASCII) DA output 1: Servo parameter sv061 set address data (unit: pulse) DA Address 2: Servo parameter sv062 set value (address) (unit: ASCII) DA output 2: Servo parameter sv062 set address data (unit: pulse)
(4) Spindle PLG diagnosis information (Spindle drive unit only)	Displays the data for each axis Encoder Diagn L: Displays the output signal (Low) of the motor side PLG Encoder Diagn H: Displays the output signal (High) of the motor side PLG Sub Encoder Diagn L: Displays the output signal (Low) of the machine side PLG Sub Encoder Diagn H: Displays the output signal (High) of the machine side PLG

Note

(1) PLG (pulse generator) detects the pulse signal and it is used to detect the rotation state of the motor.

Menus

Menus	Details
Servo unit	Displays the servo unit diagnosis information in the data display area.
Spindle unit	Displays the spindle unit diagnosis information in the data display area. <Note> ♦When the parameter "#1039 spinno" is set to "0", this menu is not displayed.
PLG diagn	Switches the display between the DA output and the spindle PLG diagnosis information. Pressing this button again after this menu is highlighted, the display switches to the DA output. <Note> ♦When the parameter "#1039 spinno" is set to "0", this menu is not displayed. ♦Even when the parameter "#1039 spinno" is set to other than "0", this menu will be grayed out and non-selectable. while displaying the servo unit diagnosis information.
All num clr	This clears the number of alarms of the axis at the cursor position to "0".
Alarm num clr	This clears the number of alarms at the cursor position to "0". <Note> ♦When the cursor is on "AL cause cnt accu" or "freq", this menu is grayed out and non-selectable.
All cnt clr	Clears the all values of "AL cause cnt accu" and "freq" of the axis where the cursor is placed to 0.
Next axis	Displays the data of four axes from the next axis. This menu is displayed only when there are five or more servo axes or spindle.

4.11 Diagnosis Data Collection Setting

Mainte –

The following operations can be performed on the diagnosis collection setting screen:

(1) Setting to perform the diagnosis data collection

(2) Confirming the status of the diagnosis data collection

(3) Starting/stopping the diagnosis data collection

(4) Clearing the diagnosis data.

The data collection is started at the time of the NC power ON.
This operation is protected according to the operation level.

Diagnosis data (history data)

Data name	Max number of collection	Description
Key history	2048	This shows the key input history information on the NC operation board. [Input time, display screen No., screen name, detailed screen No., key codes and key names]
Alarm/warning history	512	This shows the history information of alarm and warning when an alarm or a warning occurs on the NC. (Including PLC alarm messages.) [Alarm occurrence time, part system, alarm No., parameter 1 and parameter 2]
PLC I/O history	2048	This shows the change history of the input/output signals between the machine, PLC ladder and the NC. [Changed time, device names and status (1: OFF→ON/0: ON→OFF)]
AC power ON/OFF history	64	This shows the history information when the power is ON/OFF. [Occurrence time and NC power ON/OFF]
Touch history	2048	This shows the touchscreen input history information on the NC operation board. [Input time, display screen No., screen name, detailed screen No., coordinate values (X/Y) and status]
Tool offset change history	128	This shows the change history information when the value set in the tool offset is changed. [Time of change, type, offset No., source, offset before change and offset after change]
Workpiece offset change history	128	This shows the change history information when the value set in the workpiece offset is changed. [Time of change, type, part system No., axis No., offset before change and offset after change]
Alarm detailed information history	Variable	This shows the detailed alarm history information when n alarm occurs on the NC. * Excluding warnings. [Alarm information, modal information and coordinate information]
Parameter change history	Total 128	This shows the change history information when the value set in the parameter is changed. [Time of change, method of change, parameter No., part system No., axis name, and parameter setting value before change and after change]
Common variable change history		This shows the change history information when the value set in the common variable is changed. [Time of change, method of change, common variable No., part system No., and variable setting value before change and after change]

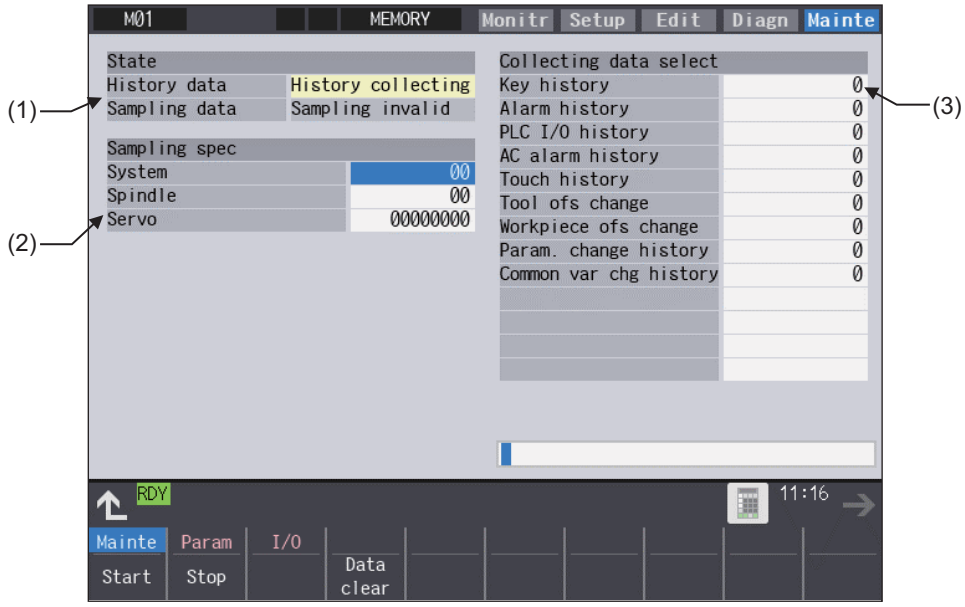

Display items

Display items		Details
(1)	State	Display the history data and sampling data collection status.
	History data	Display the history data collection status. History collecting: History data collection is in progress. History stop: History data collection is stopped.
	Sampling data	Display the sampling data collection status. Sampling: Sampling data collection is in progress. Sampling stop: Sampling data collection is stopped. Sampling invalid: Sampling data collection is disabled.
(2)	Sampling specifications	Specify the part system, spindle, and servo axes where sampling data is to be collected.
	System	Specify the part systems where sampling data is not to be collected. Specify the part system in HEX. When "0" is set, sampling is carried out for all part systems. This setting is ignored if a non-existent part system is specified.
	Spindle	Specify the spindle where sampling data is not to be collected. Specify the part system in HEX. When "0" is set, sampling is carried out for all spindles. This setting is ignored if a non-existent spindle is specified.
	Servo	Specify the servo axes where sampling data is not to be collected. Specify the part system in HEX. This setting is not system-specific. When "0" is set, sampling is carried out for all axes. This setting is ignored if a non-existent servo axis is specified.

Display items		Details
(3)	Collecting data select	This selects the diagnosis data to be collected. 0: Collected. 1: Not collected.
	Key history	This selects whether or not key history data is collected.
	Alarm history	This selects whether or not alarm history data is collected.
	PLC I/O history	This selects whether or not PLC input/output signal history data is collected.
	AC alarm history	This selects whether or not AC power ON/OFF history data is collected.
	Touch history	This selects whether or not touchscreen history data is collected.
	Tool ofs change	This selects whether or not tool offset change history data is collected.
	Workpiece ofs change	This selects whether or not workpiece offset change history data is collected.
	Param. change history	This selects whether or not parameter change history data is collected.
	Common var chg history	This selects whether or not common variable change history data is collected. Variable names are not included in the history data.

Menus

Menus	Details
Start	This begins collecting sampling data and history data.
Stop	This stops the sampling data and history data collection operation.
Data clear	This stops the sampling data and history data collection operation, and clears the collected data. This is not displayed when "#1263 bit1" is ON.

Note

(1) The alarm history data collection start/stop operation is switched using the menu [Start] or [Stop] of data collection regardless of whether "Alarm history" is set to "0" or "1".

4.11.1 Starting the Data Collection

When the NC is turned ON, the data collection starts automatically according to the settings in "Sampling spec" and "Collecting data select" on the diagnosis data collection setting screen.
After the diagnosis data collection is stopped by pressing the menu [Stop] or [Data clear] on the diagnosis data collection setting screen, the data collection does not start even if the NC power is turned ON again. In this case, press the menu [Start] on the diagnosis data collection setting screen to start the diagnosis data collection.
The settings for "Sampling spec" and "Collecting data select" on the diagnosis data collection screen are valid after the NC power is ON again.

(1) When the menu [Start] is pressed, the confirmation message appears.
(2) Press the [Y] or [INPUT] key to start (restart) the data collection.

Note

(1) Data collection starts even if "Alarm history" is set to "1" (Not collect).

4.11.2 Stopping the Data Collection

The data collection stops when any of the following operations is performed:

Condition to stop data collection (trigger)	Target data to stop collection
Press the menu [Stop] on the support screen.	Sampling data and history data
Press the menu [Data clear] on the support screen.	Sampling data and history data
At the time of the occurrence of servo alarm (emergency stop state)	Sampling data
At the rising edge of the diagnosis data collection stop signal (NETSTP)	Sampling data

(1) When the menu [Stop] is pressed, the confirmation message appears.

(2) Press the [Y] or [INPUT] key to stop the data collection.
Press the menu [Start] to restart the data collection. When the data collection is stopped by pressing the menu [Stop], the data collection is not restarted even when the NC is turned ON again.

Note

(1) Data collection is stopped even if "Alarm history" is set to "0" (Collect).

4.11.3 Clearing the Collected Data

When the data clear menu is executed, the data collection is stopped and the collected data is cleared.

(1) When the menu [Data clear] is pressed, the confirmation message appears.

(2) Press the [Y] or [INPUT] key to clear the collected data.
When the collected data is cleared, the data collection is stopped.
Press the menu [Start] to restart the data collection. When the data collection is stopped by pressing the menu [Data clear], the data collection is not restarted even when the NC is turned ON again.

4.11.4 Referring to the Collected Data

The history data can be output via the input/output screen as the history data file. It can also be viewed on the edit screen. However, the password issued by the MTB is required to view it on the edit screen.

The types of history data files are as follows:

All history	History data is recorded in time ascending order and individually for each of the following types: key history, touchscreen history, alarm history, PLC I/O signal history, tool offset change history, workpiece offset change history, AC alarm history, parameter change history and common variable change history. (*1) (/LOG/ALLLOG.LOG) Change history of PLC switch is output as PLC I/O signal history. Parameter change history and common variable change history are not output to the history data file.
Key history	Only the key history data is displayed in time ascending order. (/LOG/KEYLOG.LOG)
Touch history	Only the touchscreen history data is displayed in time ascending order. (/LOG/TOUCHLOG.LOG)
Alarm detailed information history	Only the alarm detailed information history is displayed in time ascending order. (/LOGEX/ALM-SV1.LOG) Latest servo/spindle alarm detailed information history (/LOGEX/ALM-SV2.LOG) Previous servo/spindle alarm detailed information history (/LOGEX/ALM-SV3.LOG) Second to last servo/spindle alarm detailed information history (/LOGEX/ALM-SV4.LOG) Third to last servo/spindle alarm detailed information history (/LOGEX/ALM-SV5.LOG) Fourth to last servo/spindle alarm detailed information history (/LOGEX/ALM-OTR1.LOG) Latest alarm detailed information history of other than servo/spindle alarm (/LOGEX/ALM-OTR2.LOG) Previous alarm detailed information history of other than servo/spindle alarm (/LOGEX/ALM-OTR3.LOG) Second to last alarm detailed information history of other than servo/spindle alarm (/LOGEX/ALM-OTR4.LOG) Third to last alarm detailed information history of other than servo/spindle alarm (/LOGEX/ALM-OTR5.LOG) Fourth to last alarm detailed information history of other than servo/spindle alarm

(*1) Sorting order of all history data files can be switched with a parameter.

Sorting order	#11052 LOG Sort Order	Details
Ascending by date and time for each history type	0	History data is output in time ascending order and individually for each of the following types: key history, touchscreen history, alarm history, PLC I/O signal history, tool offset change history, workpiece offset change history, AC alarm history, parameter change history and common variable change history. If two or more oldest histories have the same time and date, they are displayed in the order of key history, touchscreen history, alarm history, PLC I/O signal history, tool offset change history, workpiece offset change history, AC alarm history, parameter change history and common variable change history.
Ascending by date and time for all history	1	History data of each history type is output collectively in time ascending order. If two or more histories have the same time and date, they are displayed in the order of key history, touchscreen history, alarm history, PLC I/O signal history, tool offset change history, workpiece offset change history, AC alarm history, parameter change history and common variable change history.

Procedures to output the history data files

(1) Select [Mainte]-[I/O].

(2) Set the files of device A as follows:
A:Dev: Memory
Directory: /LOG (Displayed as "History".)
File name: ALLLOG.LOG (all history), KEYLOG.LOG (key history), TOUCHLOG.LOG (touchscreen history)

<Note>

- Even if the menu [List update] is executed, ALLLOG.LOG, KEYLOG.LOG or TOUCHLOG.LOG is not displayed in the list.

(3) Press the menu [Area change] to set the destination of the device B file.
(In this manual, the destination is HD (D :/NCFILE) as an example.)
B: Dev: HD
Directory: Select a destination directory.
File name: Input a file name to save.

<Note>

- If you omit the file name, the file is named with the same name as the device A.

(4) Press the menu [Trnsfr A→B] to output the file.

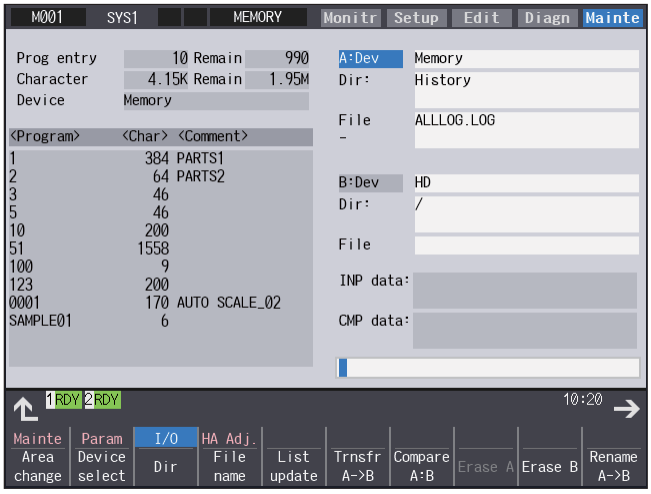

D:¥NCFILE¥ALLLOG.LOG

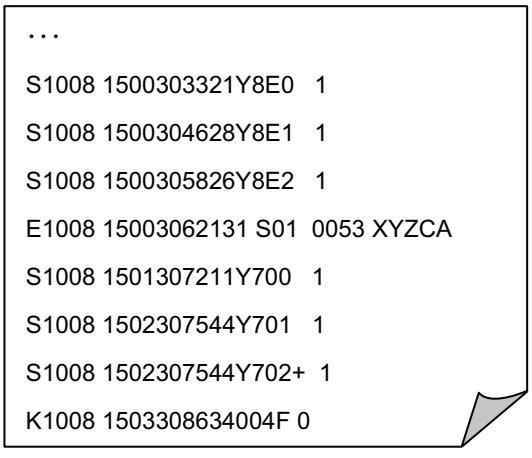

Procedures to output the alarm detailed information history data files

(1) Select [Mainte]-[I/O].

(2) Set the files of device A as follows:
A:Dev: Memory
Directory: /LOGEX
File name: ALM-SVn.LOG, ALM-OTRn.LOG (n = 1 to 5)

<Note>

- When the menu [List update] is executed, ALM-SV1.LOG to ALM-SV5.LOG and ALM-OTR1.LOG to ALM-OTR5.LOG are displayed in the list.

(3) Press the menu [Area change] to set the destination of the device B file.
(In this manual, the destination is USB memory as an example.)
B:Dev: USB memory
Directory: Select a destination directory.
File name: Input a file name to save.

<Note>

- If you omit the file name, the file is named with the same name as the device A.

(4) Press the menu [Trnsfr A→B] to output the file.

Procedures to view on the edit screen of the history data

(1) On the Mainte screen, select [Mainte] and then [Psswd input] to input the password issued by the MTB.

(2) Select the menu [Edit]-[Open] on the edit screen.

(3) Input the following strings in the input area according to the history data to browse, and then press the [INPUT] key.
- "/LOG/ALLLOG.LOG" for all history data
- "/LOG/KEYLOG.LOG" for key history data
- "/LOG/TOUCHLOG.LOG" for touchscreen history data
- "/LOGEX/ALM-SVn.LOG" (n = 1 to 5) for servo/spindle alarm detailed information history data
- "/LOGEX/ALM-OTRn.LOG" (n = 1 to 5) except for servo/spindle alarm detailed information history data

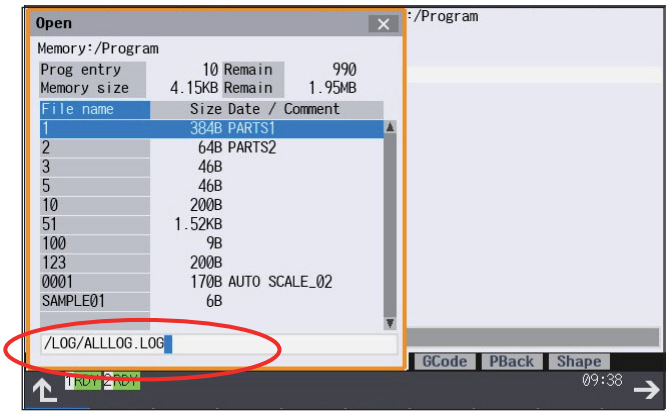

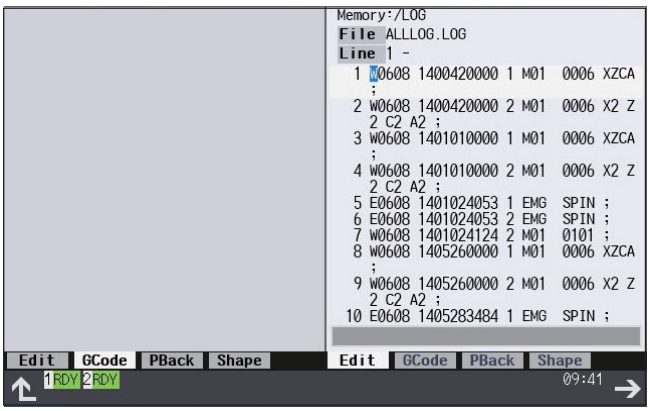

4.11.5 Display Delay Function for Communication Errors and Servo/Spindle Alarms

When the power is turned OFF, the communication error (Y02 System error 0051) or the servo alarm (S01 Servo alarm 87) may occur depending on the machine configuration. Sometimes these alarms fill up the alarm history display to be obstacles for maintenance diagnosis.

Set the parameter "#1476 ComErrDly" (Delayed display and storage of communication error) or "1477 SrvAlmDly" (Delayed display and storage of servo/spindle alarm) in this case, and saving of these alarms in the alarm history is delayed and they also are not recorded. The parameter "#1476 ComErrDly" or "#1477 SrvAlmDly" only enables the display/history of the alarms to be postponed; therefore, the NC is in the emergency stop state while the alarm display is being delayed.

Set the minimum value in the parameter because the display of the communication error or servo/spindle alarm caused by the other issues than the power OFF is also to be delayed. When the history of the communication error or servo/spindle alarm is not recorded at the timing of the power OFF, this setting is not required.

4.12 Application Error Detection

With the application error detection function, applications using the custom API library are automatically detected from all applications that are operated in the display unit of M800V/M80V Series, and the presence and absence of responses are observed at fixed intervals. Applications which give no response and remain unchanged for a period of time are detected as abnormal and the log is saved.

(*) This function is valid on Windows-based display of M800VW/M80VW Series only.

The application error detection function does not particularly display the error message etc. when an error is detected, but it saves information and data log to investigate the cause easily. On the input/output screen, saved log can be transferred to SD card.
If the screen operation is disabled due to an error such as screen lock, turn the NC power OFF, then turn it ON again, and output the log files to an SD card on the input/output screen.

List of the log to be saved

No.	Information	Timing for saving (*1)	What you understand from the information	Narrow the cause by combining the information		
				NC side	PC side	Application side
1	Application name in which the error occurred. ・Application name ・Process ID	A	Application name in which the error occurred.	○	○	○
2	The time the error detection function started.	C	The elapsed time from when the NC power is turned ON to the error occurrence.	○	○	○
3	The time error occurred ・The time error occurred ・The time of error canceling	A	By comparing with the time of various data, it can search the information on when the error occurred.	○	○	○
4	Connection state between PC and NC (Whether NC is working, and confirming the cable disconnection) ・Result from confirming the connection state to NC.	A	It can confirm the connection state when the connection error has occurred between PC and NC.	○	○	-
5	History of key and touch screen. ・The name of application which is active. ・Key code of the key which is held down. ・Coordinate which the touch screen is touched.	B	It can confirm the operation when the error has occurred.	-	-	○

(*1) The timing to save the log.

A: When error is detected.
Observation application saves the log when the error has occurred.

B: Constant
It saves the given amount of log constantly.
It keeps saving logs even after the error detection, so presume the time when the error has occurred from the time in the log.

C: When the error detection is started

4.13 IP Address Resetting Procedure at Disabled Network Communication [M800VW/M80VW Series Only]

4.13.1 Connectable Control Unit IP Address List Screen

After NC starts, when the communication between the control unit and the display unit cannot be established even after the time-out time passes, the connectable control unit IP address list screen appears. The contents of IP address list screen is displayed in English.

If no IP address is displayed, check whether there are any loose or disconnected cables, hardware breakdowns, etc.

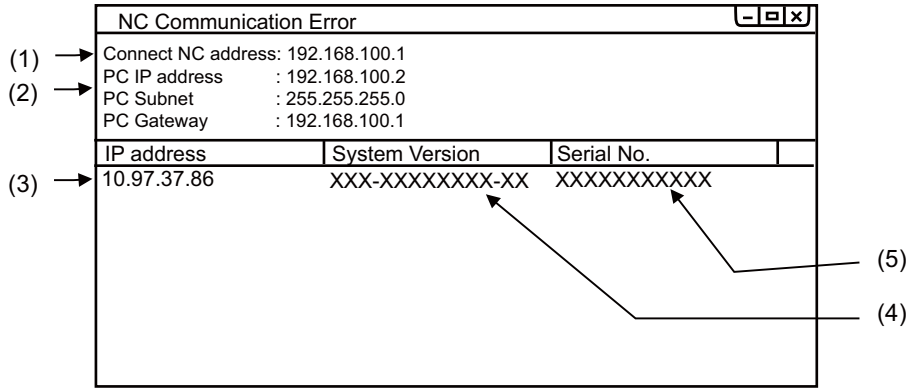

Display Items

	Display Items	Description
(1)	Connect NC address	This displays IP address of the connection destination control unit.
(2)	PC IP address PC Subnet PC Gateway	This displays IP address, subnet mask, gateway settings.
(3)	IP address	This displays IP address of the connectable control unit. (*1)
(4)	System Version	This displays system version of the connectable control unit. (*1)
(5)	Serial No.	This displays serial No. of the connectable control unit. (*1)

(*1) Up to ten lines are displayed at a time. When the display item exceeds ten lines, the following lines can be displayed with the Page down key.

4.13.2 Resetting Procedure

Operation method

(1) Select the IP address of the connection destination control unit by using the [↑], [↓], PAGE and PAGE keys from IP address list, and press the [INPUT] key.

→ The dialog which notifies the change of the network setting is displayed.
To establish the communication between the selected control unit and the display unit, the Ethernet parameter is temporarily changed.

(2) Press the [INPUT] key.

→ After a while, the NC screen is displayed.
(If the NC screen is not displayed, remove the control unit from external network, and carry out the procedure (1) again.)
<Note>
- In the step, the communication between the control unit and the display unit is temporarily established. Therefore, unless the parameter is reset (in the procedure (3)), the system will be returned to the state of procedure (1) at the next NC startup.

(3) Set the Ethernet parameter by referring to the following example of the network connection, and restart NC.
<Example of the network connection>

→ The NC screen is normally displayed.

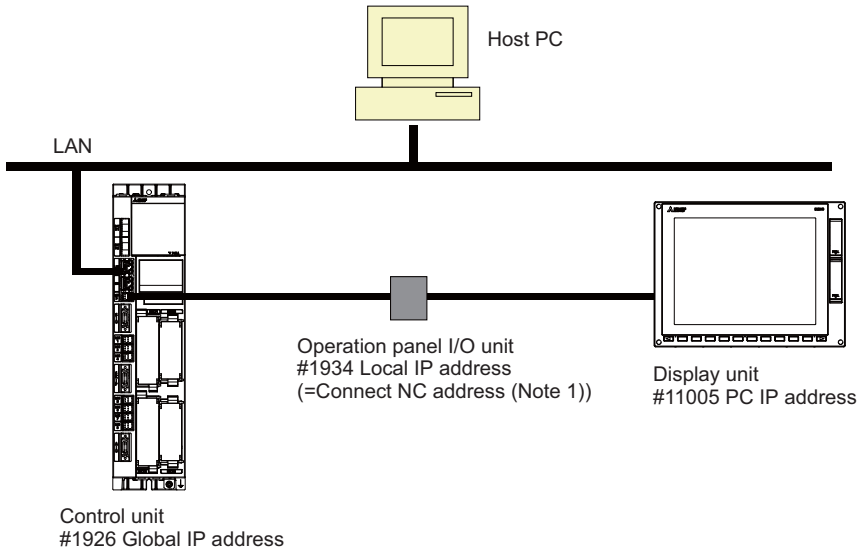

Note

(1) "Connect NC address" is the same as the setting of "[HOSTS] TCP1" in setting file "melcfg.ini".
The setting file "melcfg.ini" is in the following directory.
C:\WINDOWS\melcfg.ini

(2) When the control unit is added in user's network environment, match and change the parameters "#1926(PR) Global IP address", "#1927(PR) Global Subnet mask" and "#1928(PR) Global Gateway" to the user environment. Normally, the parameters "#1934 Local IP address", "#1935 Local Subnet mask" and "Connect NC address" need not be changed from the default setting value.

(3) When the display's IP address is automatically searched, it is searched from among up to 254 IP addresses whose upper 3 bytes coincide with those of the local IP address (#1934 Local IP address).
However, depending on the setting of the 4th byte of the PC subnet mask (PC Subnet), the search range may be limited.

(Example 1) General setting

<Setting example>
NC IP address: 10.97.12.16
PC subnet mask: 255.255.255.0

<Search range>
From between 10.97.12.1 and 10.97.12.254, the smallest free address is searched.

(Example 2) When the search range is limited up to 254 addresses

<Setting example>
NC IP address: 10.97.12.16
PC subnet mask: 255.255.0.0

<Search range>
From between 10.97.12.1 to 10.97.12.254, the smallest free address is searched.

(Example 3) When the search range is limited to 254 addresses or less

<Setting example>
NC IP address: 10.97.12.16
PC subnet mask: 255.255.255.128

<Search range>
From between 10.97.12.1 to 10.97.12.126, the smallest free address is searched.

4.13.3 Message

The following messages display when IP address is reset.

Message	Description
Searching	- The system is searching the connectable NC control unit to establish the communication between the control unit and the display unit. Please wait until the search is completed.
Socket error	- The system could not find the connectable control unit because of the network interference. Turn OFF the NC power supply, and review the wiring for the network connection.
Setting error- Connect NC address	- The automatic connection with the control unit failed because the setting file to set and save the unit's IP address was not found/is read-only/is of an illegal format. Review "[HOSTS] TCP1" setting in the setting file "melcfg.ini".
Searching IP address	- The system is automatically searching the appropriate IP address because IP address of the display unit is inapposite. Please wait until the search is completed.
Review the setting of the Ethernet parameter after the screen starts.	- The IP address setting of connected control unit and display unit was completed. Please review the setting of the Ethernet parameter after the screen starts.
Searching PC IP address failed.	- No empty IP address was found by the automatic search for the IP address of the display unit. Please remove the control unit from the network, and turn ON the NC power supply again.

4.14 Field Network Diagnostics Function

This function displays the statistical information of packet transmission and reception (transmission/reception frequency, number of errors, etc.), which is necessary when the communication status of the communication function expansion unit (the field network expansion unit) is diagnosed.

The function is useful to figure out the causes, for example, in the following cases.

- Communication is disconnected
- Communication is not carried out properly

The communication function expansion units in the table below are available with this function.

Unit No.	Protocol
FCU8-EX564	CC-Link IE Field
FCU8-EX565	EtherNet/IP
FCU8-EX568	FL-net

The statistical information of communication packets can be checked on the I/F diagnosis screen of NC.

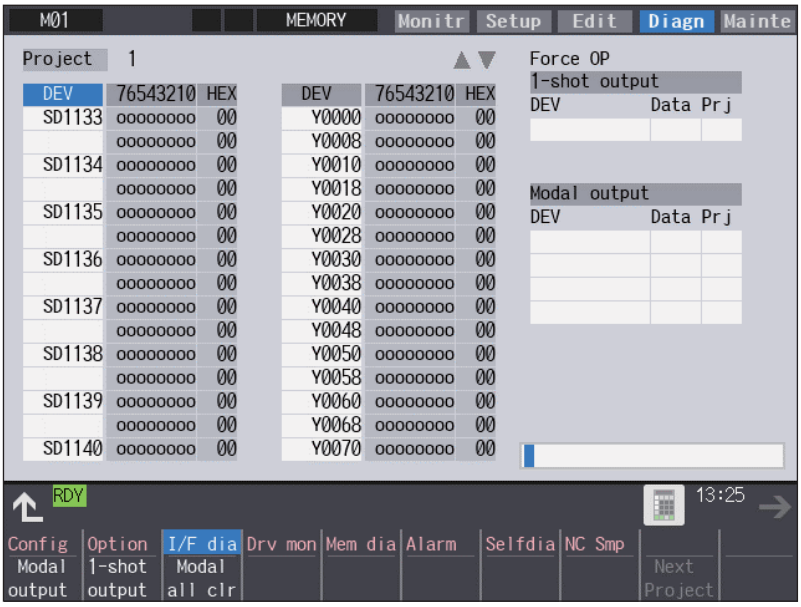

[Conditions for use]

- Data can be input or output to the I/F diagnosis screen. (The password issued by the MTB is required to be set to execute 1-shot output.)
- The field network expansion unit is not being stopped due to some exceptional reason.

4.14.1 Diagnosis Procedure

Diagnostic data is displayed on the I/F diagnosis screen.

The diagnostic data provides the statistical information of packet transmission and reception, and the specific information of each protocol are provided. Displayed data is refreshed approximately every 3 seconds.
However, the displayed data is not refreshed during the process described in the section "4.14.2 Diagnosis Command".

4.14.1.1 Statistical Information of Packet Transmission and Reception

The statistical information of packet transmission and reception can be checked by displaying the values below on the I/F diagnosis screen.
Up to two field network expansion units can be installed to an NC.

The slot to which the unit is to be installed differs depending on the models.

M800VW Series : EXT3, EXT4
M800VS/M80V Series : EXT1, EXT2
M80VW Series : EXT3

The PLC devices listed in the table below are assigned to each slot to which the unit is installed.
When multi-project is enabled, use the PLC device for project 1.

CC-Link IE Field communication:

Device (EXT1/EXT3)	Device (EXT2/EXT4)	Details
SD1133 to SD1134	SD1633 to SD1634	The number of times that packet data has been received through the port 1 (4 bytes) (*2)
SD1135 to SD1136	SD1635 to SD1636	The number of times that packet data has been received through the port 1 (4 bytes) (*1)
SD1137 to SD1138	SD1637 to SD1638	The number of times that packet data has been received through the port 2 (4 bytes) (*2)
SD1139 to SD1140	SD1639 to SD1640	The number of times that packet data has been received through the port 2 (4 bytes) (*1)
SD1141 to SD1142	SD1641 to SD1642	The number of times that errors have occurred in packet reception through the port 1 (2 bytes) (*2)
SD1143 to SD1144	SD1643 to SD1644	The number of times that errors have occurred in packet reception through the port 1 (2 bytes) (*1)
SD1145 to SD1146	SD1645 to SD1646	The number of times that errors have occurred in packet reception through the port 2 (2 bytes) (*2)
SD1147 to SD1148	SD1647 to SD1648	The number of times that errors have occurred in packet reception through the port 2 (2 bytes) (*1)
SD1149 to SD1163	SD1649 to SD1663	Reserved
SD1164 to SD1182	SD1664 to SD1682	For details, refer to "4.14.1.2 Protocol-Specific Information".

(*1) The data cannot be cleared by turning the power OFF. For details for clearing data, refer to "4.14.2 Diagnosis Command".

(*2) The data is cleared by turning the power OFF.

Other than CC-Link IE Field communication:

Device (EXT1/EXT3)	Device (EXT2/EXT4)	Details
SD1133 to SD1134	SD1633 to SD1634	The number of times that packet data has been transmitted (4 bytes) (*2)
SD1135 to SD1136	SD1635 to SD1636	The number of times that packet data has been transmitted (4 bytes) (*1)
SD1137 to SD1138	SD1637 to SD1638	The number of times that packet data has been received (4 bytes) (*2)
SD1139 to SD1140	SD1639 to SD1640	The number of times that packet data has been received (4 bytes) (*1)
SD1141 to SD1142	SD1641 to SD1642	The number of times that errors have occurred in packet transmission (4 bytes) (*2)
SD1143 to SD1144	SD1643 to SD1644	The number of times that errors have occurred in packet transmission (4 bytes) (*1)
SD1145 to SD1146	SD1645 to SD1646	The number of times that errors have occurred in packet reception (4 bytes) (*2)
SD1147 to SD1148	SD1647 to SD1648	The number of times that errors have occurred in packet reception (4 bytes) (*1)
SD1149 to SD1150	SD1649 to SD1650	The number of times that packet data has been transmitted and received per one second (*2)
SD1151 to SD1152	SD1651 to SD1652	The maximum number of times that packet data has been transmitted and received per one second (*2)
SD1153 to SD1163	SD1653 to SD1663	Reserved
SD1164 to SD1182	SD1664 to SD1682	The function of each device is different depending on the protocol. For details, refer to "4.14.1.2 Protocol-Specific Information".

(*1) The data cannot be cleared by turning the power OFF. For details for clearing data, refer to "4.14.2 Diagnosis Command".

(*2) The data is cleared by turning the power OFF.

Diagnosis using the statistical information of packet transmission and reception

State	Details	Corrective action
The following data do not increase. (*1) •The number of times that packet data has been transmitted (SD1133 to SD1134 or SD1633 to SD1634) •The number of times that packet data has been received (SD1137 to SD1138 or SD1637 to SD1638)	Some cables might be disconnected.	Check the connection.
The number of the following data are about to reach the maximum number of the packets of H/W (HUB etc.) which configures the network. •The number of times that packet data has been transmitted and received per one second (SD1149 to SD1150 or SD1649 to SD1650) •The number of times that packet data has been transmitted and received per one second (SD1151 to SD1152 or SD1651 to SD1652)	The H/W may not be compatible with the network.	Check the network configuration.
The following data are kept increasing. (*1)(*2) •The number of times that errors have occurred in packet transmission (SD1141 to SD1142 or SD1641 to SD1642) •The number of times that errors have occurred in packet reception (SD1145 to SD1146 or SD1645 to SD1646)	Noise might occur.	Check the following items. •The device which generates noise does not exist. •Measures for preventing noise (e.g. the Ethernet cable is clamped) is taken. •The Ethernet cable is not deteriorated.

(*1) When CC-Link IE communication is made, check the number of times that the data has been received only.

(*2) Regardless of the noise influences the number may increase by a small amount by turning the power ON/OFF or by connection or disconnection of the Ethernet cable.

4.14.1.2 Protocol-Specific Information

The device ranges SD1164 to SD1182 and SD1664 to SD1682 are opened for each protocol, which are used as indicated below.

When multi-project is enabled, use the PLC device for project 1.

Device (EXT1/EXT3)	Device (EXT2/EXT4)	CC-Link IE Field	EtherNet/IP	FL-net
SD1164	SD1664	Not used	The number of receptions of Reset request (*1) When the number increases, an unnecessary Reset is being requested from the connected device.	Totaling socket send count
SD1165 to SD1182	SD1665 to SD1682	Not used	Not used	
SD1166	SD1666	Not used	Not used	Totaling socket receive count
SD1167	SD1667	Not used	Not used	
SD1168	SD1668	Not used	Not used	Cyclic transmission receive error count
SD1169	SD1669	Not used	Not used	Message transmission resend count
SD1170	SD1670	Not used	Not used	Message transmission resend over count
SD1171	SD1671	Not used	Not used	Message transmission receive error count
SD1172	SD1672	Not used	Not used	ACK error count
SD1173	SD1673	Not used	Not used	Token abnormality recognition count
SD1174	SD1674	Not used	Not used	Self-release count
SD1175	SD1675	Not used	Not used	Other node release recognition count
SD1176 to SD1182	SD1676 to SD1682	Not used	Not used	Not used

(*1) The data cannot be cleared by turning the power OFF. For details for clearing data, refer to "4.14.2 Diagnosis Command".

How to diagnose the specific information of protocols

■EtherNet/IP

State	Details	Corrective action
The following data are increasing. •The number of receptions of Reset request (SD1164 or SD1664)	Communicating device requests an unnecessary Reset. The device might be infected with a virus. (Reset request is not necessary for EtherNet/IP on the NC.)	Contact MTB to see that the device which requests the unnecessary Reset functions properly.

■FL-net

State	Details	Corrective action
The following data are increasing.		
•Cyclic transmission receive error count (SD1168 or SD1668) •Message transmission receive error count (SD1171 or SD1671) •Message transmission resend over count (SD1170 or SD1670)	The collision of packets occurs due to high communication load.	Check the network configuration.
	Noise occurs.	Check that no device which generates noise exists.
	FA link protocol-compliant communication cannot be made due to abnormality in the device to which the packet is being transmitted.	Check that no error is output form the device.
•ACK error count (SD1172 or SD1672)	Noise occurs.	Check that no device which generates noise exists.
	FL-net protocol-compliant communication cannot be made due to abnormality in the device to which the packet is being transmitted or in the field network expansion unit.	Check that no error is output form the device
•Token abnormality recognition count (SD1173 or SD1673)	There is a node whose token watchdog time setting is insufficient.	Check and reset the token watchdog time setting for each device.
	There is a node which has been released due to operation stop, cable disconnection or any other reasons.	Check each device whether no error occurs and cables are connected properly.
•Self-release count (SD1174 or SD1674)	"PLC STOP" state changed to "PLC RUN".	It is normal state.
	Token watchdog time setting of local node is insufficient.	Check the relevant parameter setting.
	Token could not be received due to packet loss caused by high communication load.	Check the network configuration.
•Other node release recognition count (SD1175 or SD1675)	There is a node which is to be released.	Check the node.

4.14.2 Diagnosis Command

4.14.2.1 Clearing Statistical Information of Packet Transmission and Reception

The cumulative information of packet transmission and reception can be cleared by using the 1-shot output function on the I/F diagnosis screen.

This function is useful when you reset the counter to "0" to calculate the increment per unit time of the counter.
The devices listed in the section "4.14.1 Diagnosis Procedure" (SD1133 to SD1182 or SD1633 to SD1682) can be cleared.

SD devices to be used for issuing the diagnosis command are as follows. SD devices for the diagnosis command are also assigned to each slot.
Make sure to use the 1-shot output function on issuing the command.

When multi-project is enabled, use the PLC device for project 1.

Device (EXT1/EXT3)	Device (EXT2/EXT4)	Use
SD1183	SD1683	Issuing the diagnosis command
SD1184	SD1684	Execution result of the diagnosis command Executing: "DDDD" (HEX) is displayed. Completed: The command previously executed is displayed. Error occurs: Error code is displayed.

Note

(1) When two expansion units are installed and one of them is executing a diagnosis command, this function cannot issue any diagnosis command to the other unit.

[Operation]

Input "0001" to the SD device for issuing the diagnosis command on the I/F diagnosis screen, and execute the command.

After this command is executed, the screen transitions as follows before the execution is completed.

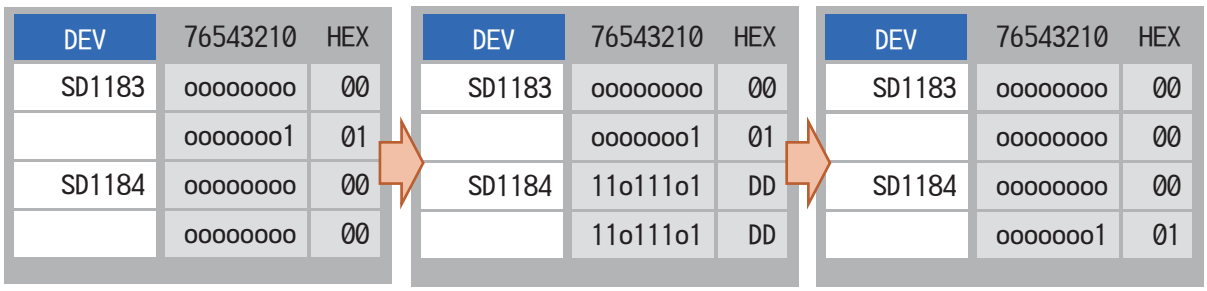

Input the command	Executing the command	Completed
Output (1-shot output) the command "0001" (HEX) to the device for issuing the diagnosis command.	After the command is executed, the device for execution result of the diagnosis command changes to "DDDD" (HEX).	The device for issuing the diagnosis command is cleared, and the device for execution result of the diagnosis command is updated.

If "EXXX" is displayed on the device for execution result of the diagnosis command when the operation is completed, it means that an error occurs. (XXX is any hexadecimal number.) For detailed information of errors, refer to "4.14.2.2 Error Code List".

4.14.2.2 Error Code List

When an error occurs upon execution of the diagnosis command, the execution result indicates the error code.

The display of each error and its meaning are as follows.

Value	Details
E001(HEX)	Notification of invalid command input This error code is displayed when an invalid command is input.
EFFF(HEX)	Notification that an uncorrectable error occurs When this error occurs, this function might be in the state that the diagnosis command cannot be used. Contact the Service Center. Also, the result of command execution process is not normal.

5

Troubleshooting

If trouble occurs during operation, the accurate cause must be found so that adequate measures can be taken. Perform the following checks for this.

5.1 Troubleshooting

Confirm "when", "when doing what", "what kind of trouble" and "how frequently" the trouble occurred. Also check how many years the machine has been operated, and how many hours a day it is used.

(1) General confirmation items

- MTB and type of machine

(2) When?

- What time did the trouble occur?
- How long had passed after the power was turned ON?

(3) What kind of trouble?

- What was displayed on the Alarm Diagnosis screen of the display unit?
  Display the Alarm Diagnosis screen, and check the alarm details.
- What was displayed for the machine sequence alarm?

(4) What were you doing when this occurred?

- What was the NC operation mode?
  During automatic operation: Program No., sequence No. and program details when the trouble occurred.
  During manual operation: manual operation
- What was the operation procedure?
- What were the previous and next steps?
- What screen is displayed on the display unit of MTB?
- What is the state of the peripheral devices?
- Did the trouble occur during input/output operations?
- What was the machine side state?
- Did the trouble occur while replacing the tools?
- Did hunting occur in the control axis?

(5) How frequently does the trouble occur?

If the trouble occurs infrequently or if it occurs during the operation of another machine, the cause may be an error in the power voltage or the noise, etc. Check whether the power voltage is normal (does it drop momentarily when other machines are operating?), and whether noise measures have been taken.

- How frequently does the trouble occur in a day? (Times/day)
- Were the peripheral devices operating?
- Check whether the same trouble is repeated during the same operation. (Repeatability)
- Check whether the same trouble occurs when the conditions are changed.
- Does the trouble occur during a specific mode?
- What is the frequency in the same workpiece?
- What is the ambient temperature?
  (Was there a sudden change in the temperature?)
- Is there any contact defect or insulation defect in the cables?
  (Is there any oil or cutting oil splattered onto the cables?)

5.1.1 Possible Causes of Trouble

The most common cause is a cable contact defect and wire breakage defect.

- Is the connection correct?
- Are the cables bent or stepped on?
- Are the joints of the cables and connectors deteriorated?
- Was a continuity test done on the cables?
- Is any of the terminal block or connector screws loosen?
- Is there any oil or cutting oil splattered onto the cables?
- Was a cable disconnected while the power was ON?
- Is any cable overheated?

Often trouble occurs due to fluctuation in the power voltage or noise from the communication cable.

- Is the power voltage always correct?
- Is the power frequency always correct?
- Does the voltage fluctuate depending on the time?
- Does the voltage drop momentarily when a peripheral device starts operation?
- Was there an instantaneous power failure before the trouble?
- Have measures against noise been taken for each unit?
- Are the communication and power system cables separated and laid?
- Is the communication cable shield sufficient?

The trouble may also occur due to sudden temperature changes or vibration and impact, although this is rare.

- Are the ambient temperature and humidity adequate?
- Is the fan in the panel where the unit is stored rotating?
- Is the panel fixed on a flat and stable floor with little vibration?

6

Replacing Each Unit

Carry out a backup of the whole system before replacement as a precautionary measure.

6.1 Data Backup and Restoration

The following two functions are available for the data backup and restoration: all backup function for files in batch and input/output function for separate files.
The following devices are available in all backup and restoration:

HD	Hard disk (For M800VS/M80V Series, this is not displayed and cannot be selected.)
Memory card	Front-side SD card
DS	[M800VW/M80VW Series] Control unit-side SD card [M800VS/M80V Series] Back-side SD card of the display unit
USB memory	-

The master data backup and restoration are used for backing up and restoring the initial state data set by MTB. The built-in memory is used for the master data backup and restoration regardless of the selected device.
Files to be backed up/restored are as follows:

Screen display	File name	Data type
System data	SRAM.BIN	SRAM data (binary files) Programs, parameters, R registers and so on
	ALL.PRM (*1)	Parameters
	ASSEMBLY.INF (*1)	System configuration
	NCMEMORY2.IMG (*3)	Machining program data of NC memory 2
Ladder	USERPLC.LAD	User PLC program
	EIPCONFDATA.BIN	EtherNet/IP configuration file
	PLCMSG_XXX.TXT (*2)	PLC message file for MTB
	PLCUMSG_XXX.TXT (*2)	PLC message file for users
	MCRMSG_XXX.TXT (*2)	Macro alarm message file
Safety parameters	SAFEPARA.BIN	Safety parameter (binary file)
Safety ladder 1	SAFEPLC1.LAD	Safety PLC program 1
Safety ladder 2	SAFEPLC2.LAD	Safety PLC program 2
APLC data	APLC.BIN	C language module created by user
Custom data	-	Custom screen data (Custom screen modules, setting files (Config.ini/customdef.ini/customload.txt), guidance data, etc.)

(*1) These data can be backed up only, cannot be restored.

(*2) "XXX" indicates the abbreviation for each language.

(*3) This data is not included in the master data.

For the input/output function for separate files, refer to "M800V/M80V Series Instruction Manual".

6.1.1 All Backup

This section explains the procedures to back up NC data in a memory card in a batch.

Note

(1) APLC data can be backed up only when the APLC release specification is valid.

Operation method

(1) Press the menu [Backup].

The all backup screen is displayed.

<Note>

- Press the ↑ to cancel this process.

(2) Press the [Y], [y] or [INPUT] key.

The backup starts.

"Executing" and "*" are displayed for the state of file under processing.

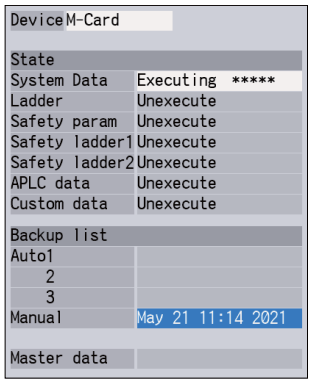

<Note>

- If any NC data file exists in the backup folder, the confirmation message "Overwrite this file?(Y/N)" appears. In this case, press the [Y], [y] or [INPUT] key to start backup.
- If the tool data is being sorted, the operation message "File access error" is displayed and the backup cannot be executed.
- For the custom data, the backup cannot be canceled during its execution.

(3) The backup is completed without error. → The states of backup-complete files turn to "Complete", the date displayed in "Backup list" will be updated.

<Note>

- If the APLC release specification is invalid, the APLC data cannot be backed up and "Unexecute" is displayed.

Note

(1) If an error occurs during the backup execution, the display is as follows:

- Operation message: "File access error"
- Execution state: "Error" for the file on which an error has occurred
- Selected area: Clear

(2) Even when the data protection key (for memory card or SD) is valid, the data can be backed up in the memory card or DS.

(3) On the Windows-based display unit, if the size (the size in the actual memory) of custom data exceeds 48MB, the operation message "Skipped custom data due to over capacity" appears and the custom data cannot be backed up. Note that the size in the actual memory and the size on Windows may differ.

6.1.2 All Restoration

The following explains the procedure to restore the various NC data backed up to memory card in a batch.
The files which has been automatically backed up can be restored only when the device set by the parameter "#8919 Auto backup device" is selected.

Note

(1) The presence/absence of each file for the transfer destination; system data, ladder, APLC data, and custom data (for only M80V Series), is not checked when the restoration is executed.

(2) Each file for the system data, ladder, APLC data and custom data are rewritten when the restoration is executed.

(3) In the following cases, an error message appears and the restoration is not executed.

- ♦During the automatic operation
- ♦One of the data protection key 1, 2 and 3 is valid.
- ♦The NC serial number does not match the manufacturing number of the backup data.
- ♦The "System data" file does not exist in the transfer source.
- ♦The ladder larger than 256 KB is stored and all backup is executed when the large-capacity PLC specification is valid, and then the specification is switched to invalid.

(4) APLC data can be restored only when the APLC release specification is valid.

(5) When smart safety observation is valid, entering the safety password is required. If the safety password is not entered, the safety parameters and the safety ladders are cannot be restored. Operate from the procedure (3) when the smart safety observation is invalid.

Operation method

(1) Press the menu [Psswd input] on the maintenance (Mainte) screen.

(2) Enter the safety password.

(3) Set the device to memory card on the all backup screen. ➡ Memory card is selected as the restoration source device.

(4) Press the menu [Restore]. ➡ The all restoration screen is displayed.

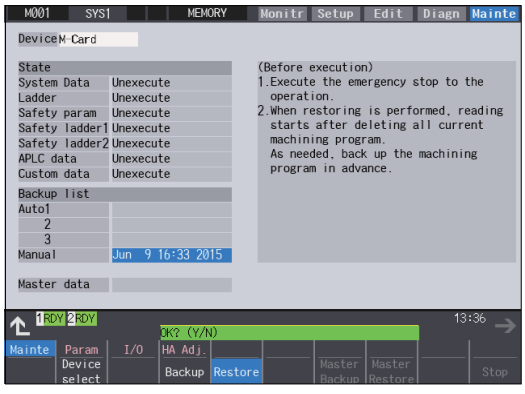

<Note>

- ♦Press the ↩ to cancel this process.
- ♦If the target device set for auto backup does not match the currently selected device, "Manual" is highlighted as the initial display position of the cursor.

(5) Move the cursor to select the file. Press the [INPUT] key.

The cursor moves as follows:

[↓] key: Auto1 -> Auto2 -> Auto3 -> Manual -> Auto1 ...

[↑] key: Auto1 -> Manual -> Auto3 -> Auto2 -> Auto1 -> …

→ The operation message "OK?(Y/N)" appears.

<Note>

- If there are no files at the position where the cursor moved to, the operation message "Select directory to restore" appears. Select the file again and then press the [INPUT] key.

(6) Press the [Y], [y] or [INPUT] key.

→ The restoration starts.

"Executing" and "*" are displayed for the state of file under processing.

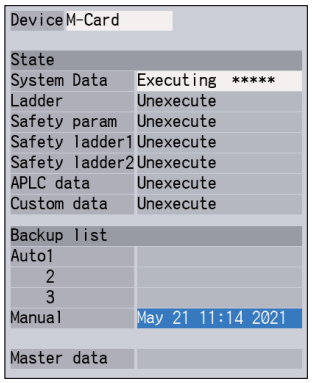

<Note>

- If PLC is in operation, the message "PLC running. Does it stop?(Y/N)" appears.
  Press the [Y], [y] or [INPUT] key to continue the restoration.
- If the tool data is being sorted, the operation message "File access error" is displayed and the restoration cannot be executed.
- For the custom data, the restoration cannot be canceled during its execution.

(7) The restoration is completed without error.

→ The states of restoration-complete files turn to "Complete", the operation message "Restore complete" appears.

"Unexecute" is displayed for the file which could not be restored, for instance, due to the nonexistence of the file.

Note

(1) When the restoration fails, perform the restoration again otherwise it may cause an abnormal operation.

(2) Restored data writes over the previous absolute position data. Carry out the absolute position detection again after restoration.

(3) If you attempt to restore custom data while custom data has already been installed, the Windows-based display unit shows the operation message "File access error", which may disable restoration. Use the integrated installer to delete the data from the NC before restoring custom data.

6.2 Control Unit

Replacement procedures

Always replace the control unit with the machine power turned OFF.

(1) Check that the machine power is turned OFF. (If the power is not OFF, turn it OFF.)

(2) Disconnect all the external cables from the control unit.
For M800VS/M80V, also disconnect the internal cables from the control unit. (MENUKEY, BL and TP connectors)

(3) Remove the screws fixing the control unit, and remove the control unit from the control unit installation fitting. (Loosen the lower fixing screw(s) first, and then remove the upper fixing screw(s) while supporting the control unit with a hand.Then lift the control unit upward and take it off. The lower fixing screw(s) do(es) not need to be removed.)

(4) Install a new control unit onto the control unit installation fitting with fixing screws.

(5) Connect all the cables back to the control unit. (Always connect the cables to the designated connectors.)

(6) Confirm that all the cables are correctly connected and close the door of the electric cabinet or operation panel.

⚠ CAUTION

1. Incorrect connections could cause devices to damage. Connect the cables to designated connectors.

2. Do not replace the control unit while the power is ON.

3. Do not connect or disconnect the cables between units while the power is ON.

Note

(1) Wire the control unit optical cable as shown below. Refer to "M800VW/M80VW Series Connection and Setup Manual" or "M800VS/M80V Series Connection and Setup Manual" when handling and wiring optical communication cable.

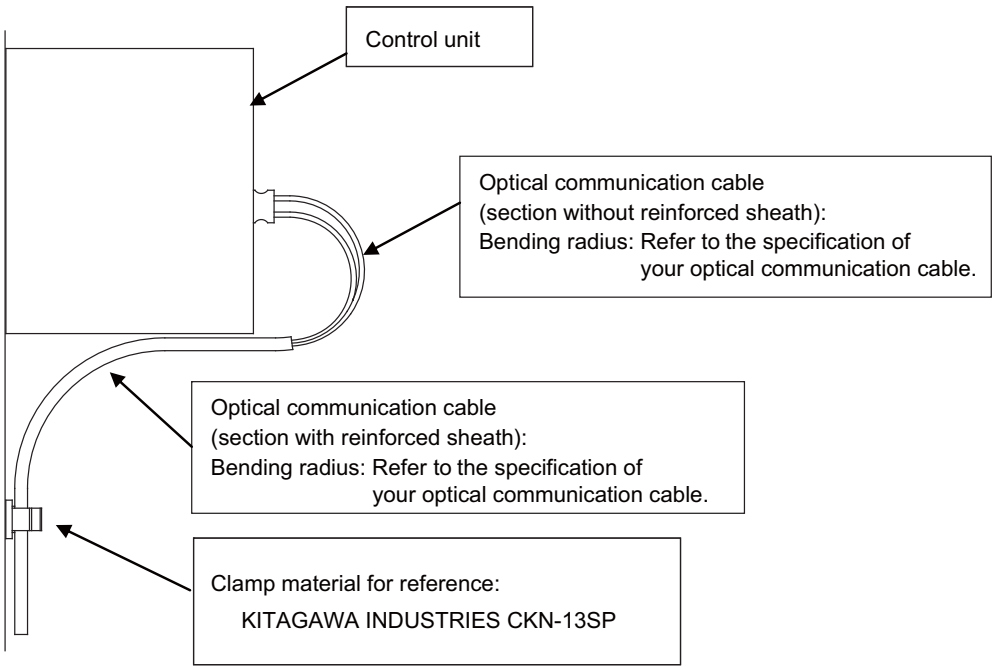

■FCU8-MU052/FCU8-MA051 (M800VW)

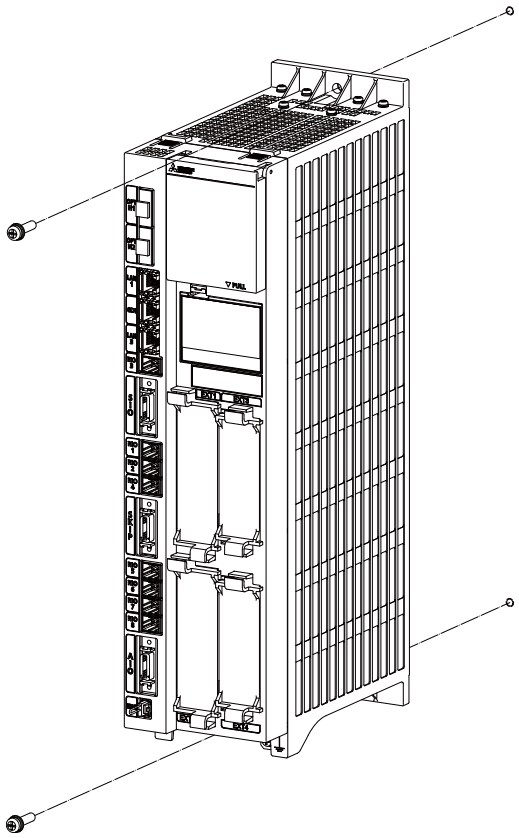

Fixing screw: M5 (2 pcs)

■FCU8-MU054 (M80VW)

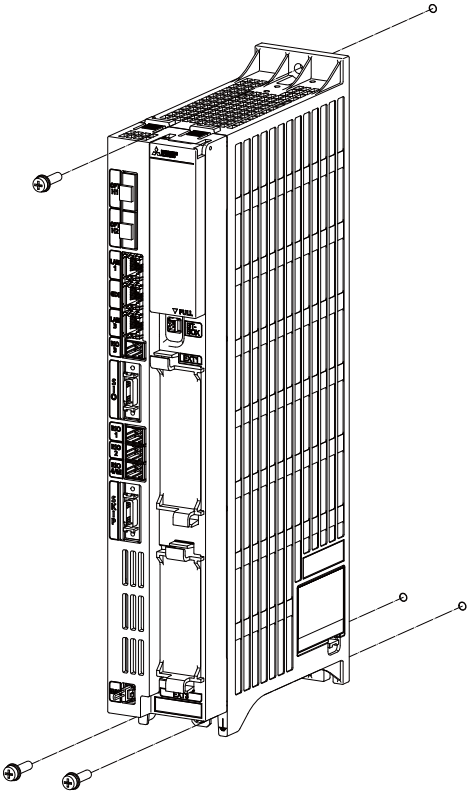

Fixing screw: M5 (3 pcs)

■FCU8-MU551/FCU8-MA551 (M800VS)
FCU8-MU521/FCU8-MU522 (M80V)

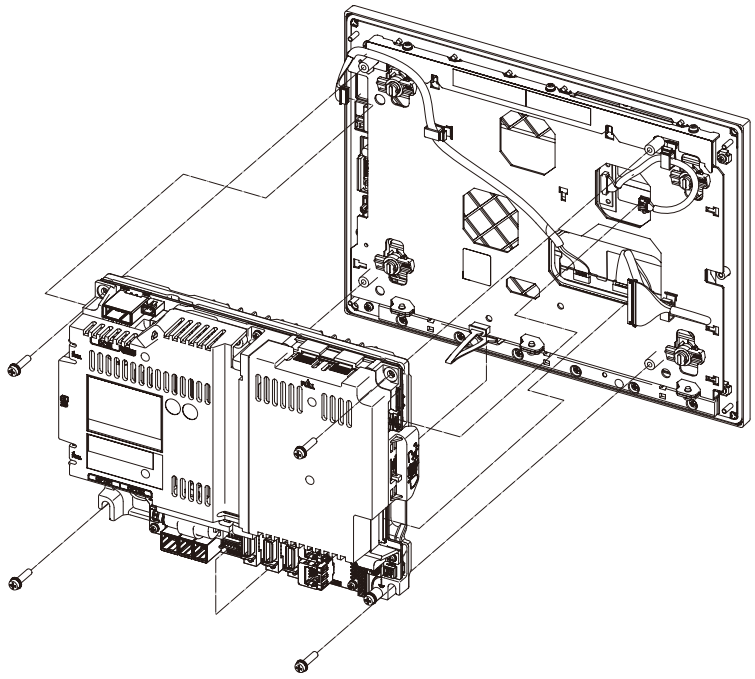

Mounting screw size: M4

6.3 Display Unit

Replacement procedures

Always replace the display unit with the control unit (machine) power turned OFF.

(1) Check that the machine power is turned OFF. (If the power is not OFF, turn it OFF.)

(2) Open the operation panel door.

(3) Disconnect all the cables connected to the display unit.

(4) Remove the screws fixing the display unit and take the display unit off.

(5) Install a new display unit with fixing screws.

(6) Connect all the cables back to the display unit. (Always connect the cables to the designated connectors.)

(7) Confirm that all the cables are correctly connected and close the operation panel door.

> ⚠ **CAUTION**
>
> **1. Incorrect connections could cause devices to damage. Connect the cables to designated connectors.**
>
> **2. Do not replace the display unit while the power is ON.**
>
> **3. Do not connect or disconnect the cables between units while the power is ON.**

■**FCU8-DU122 (8.4-type display unit)**

[Fixed on the front side]

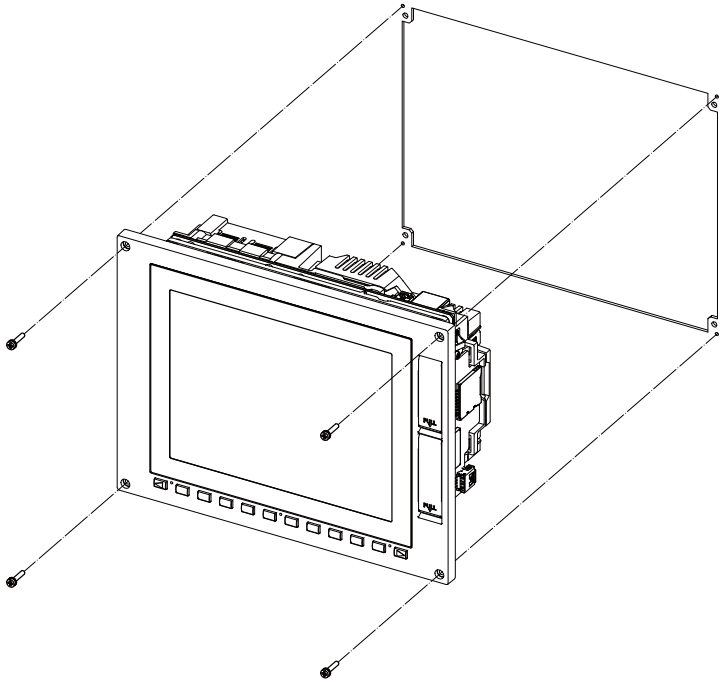

Fixing screw: Cheese head screw M3 (4 pcs)
(Fixing screws are provided with the unit.)

[Fixed on the back side]

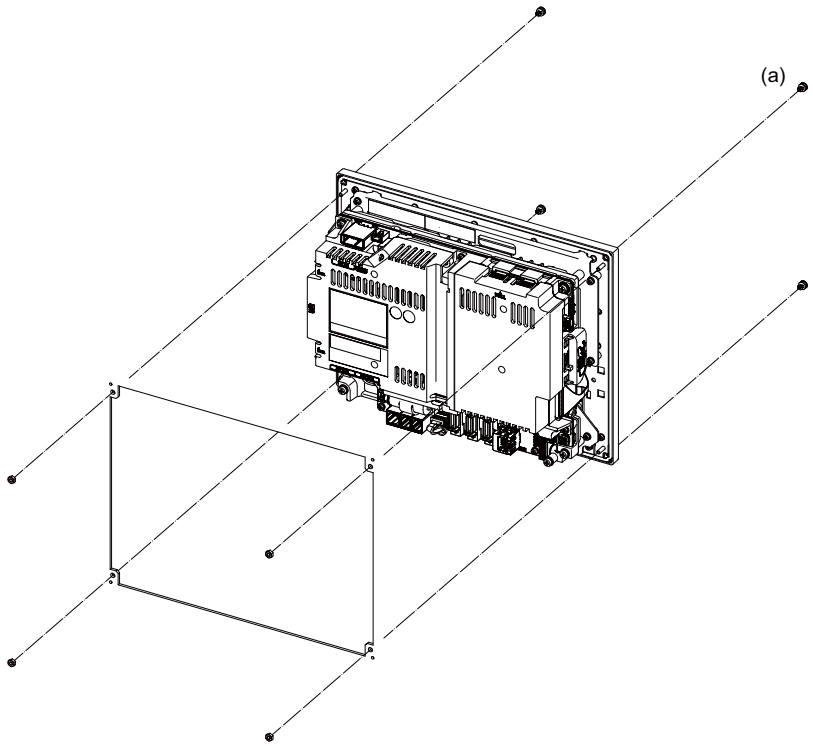

Fixture: M3 nut (4 pcs)
(4 pcs of the screw caps (a) are provided with the unit.)

■FCU8-DU142 (10.4-type display unit)

[Fixed on the front side]

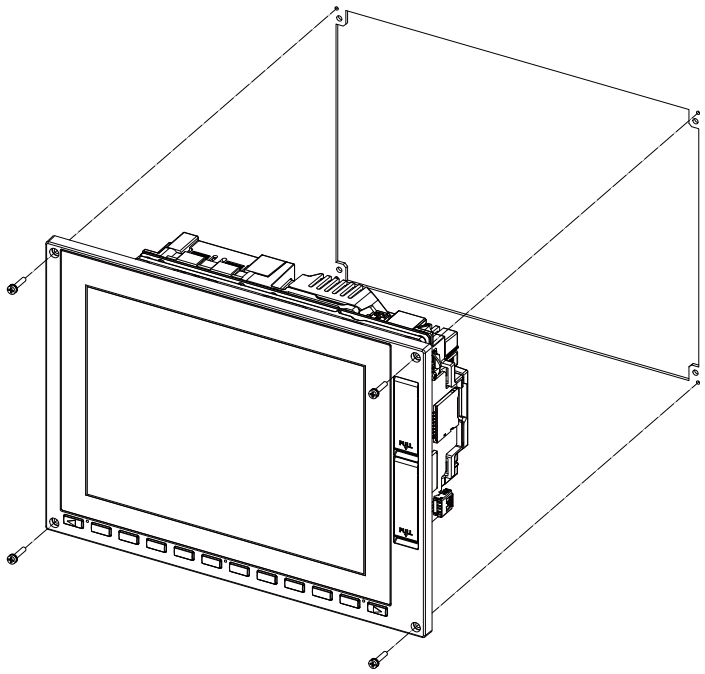

Fixing screw: Cheese head screw M3 (4 pcs)
(Fixing screws are provided with the unit.)

[Fixed on the back side]

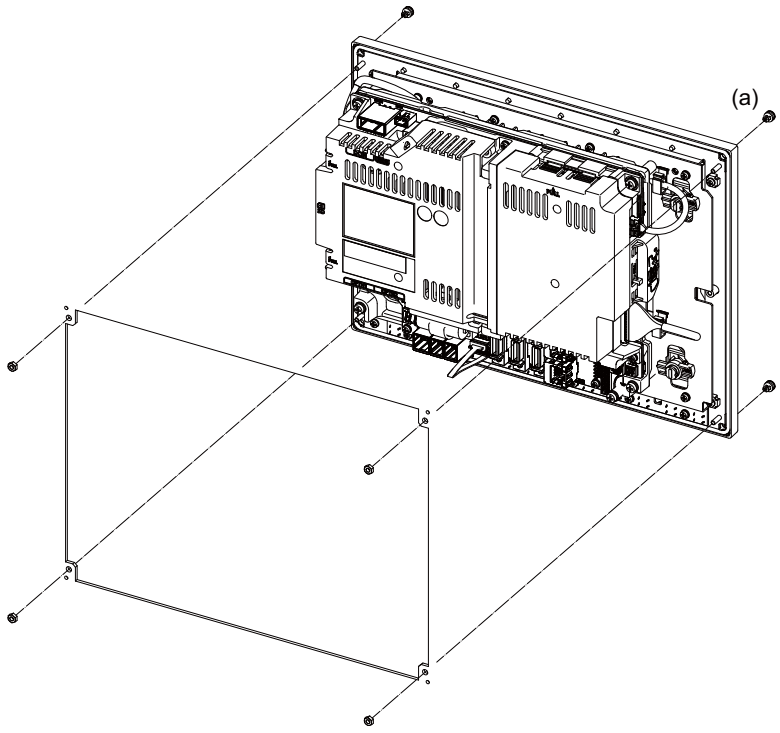

Fixture: M3 nut (4 pcs)
(4 pcs of the screw caps (a) are provided with the unit.)

■**FCU8-DU183 (15-type display unit)/FCU8-DU182 (15-type display unit)**

[Fixed on the front side]

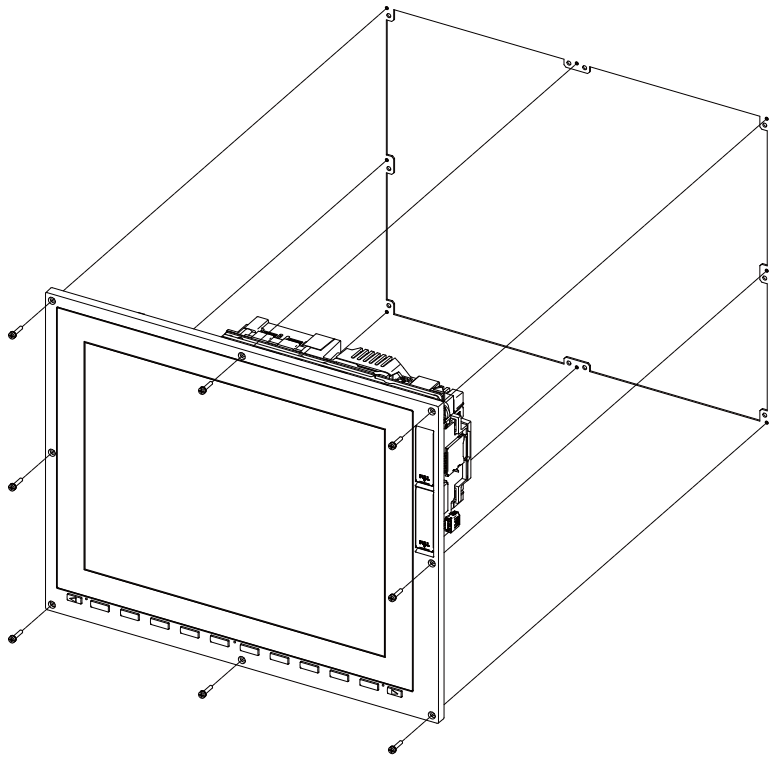

Fixing screw: Cheese head screw M3 (8 pcs).
(Fixing screws are provided with the unit.)

[Fixed on the back side]

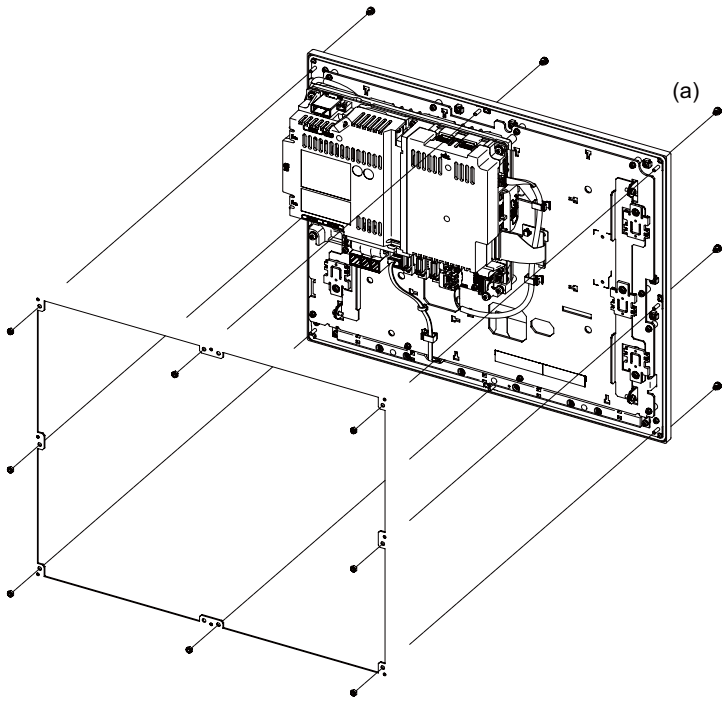

Fixture: M3 nut (8 pcs).
(8 pcs of screw caps (a) are provided with the unit.)

■**FCU8-DU193 (19-type display unit)**

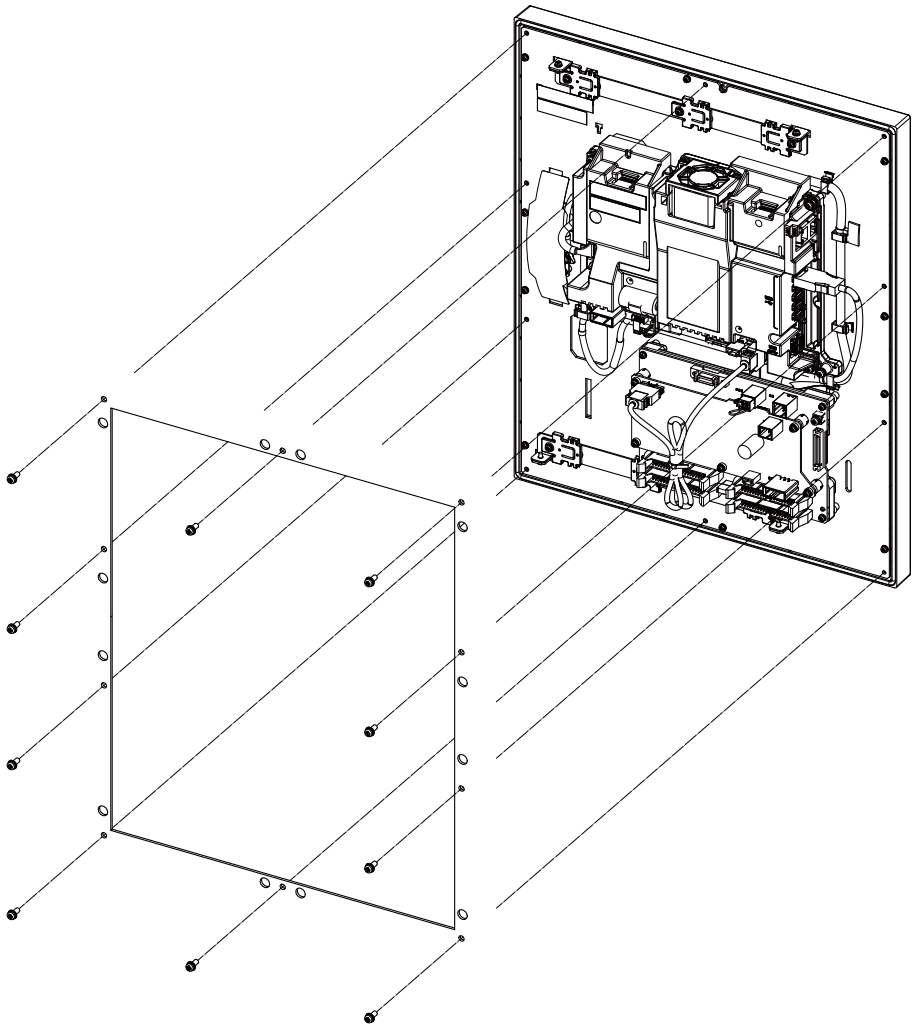

Fixing screw: Use M4×10 with spring washer and plain washer (10 screws).

■**FCU8-DU194 (19-type display unit)**

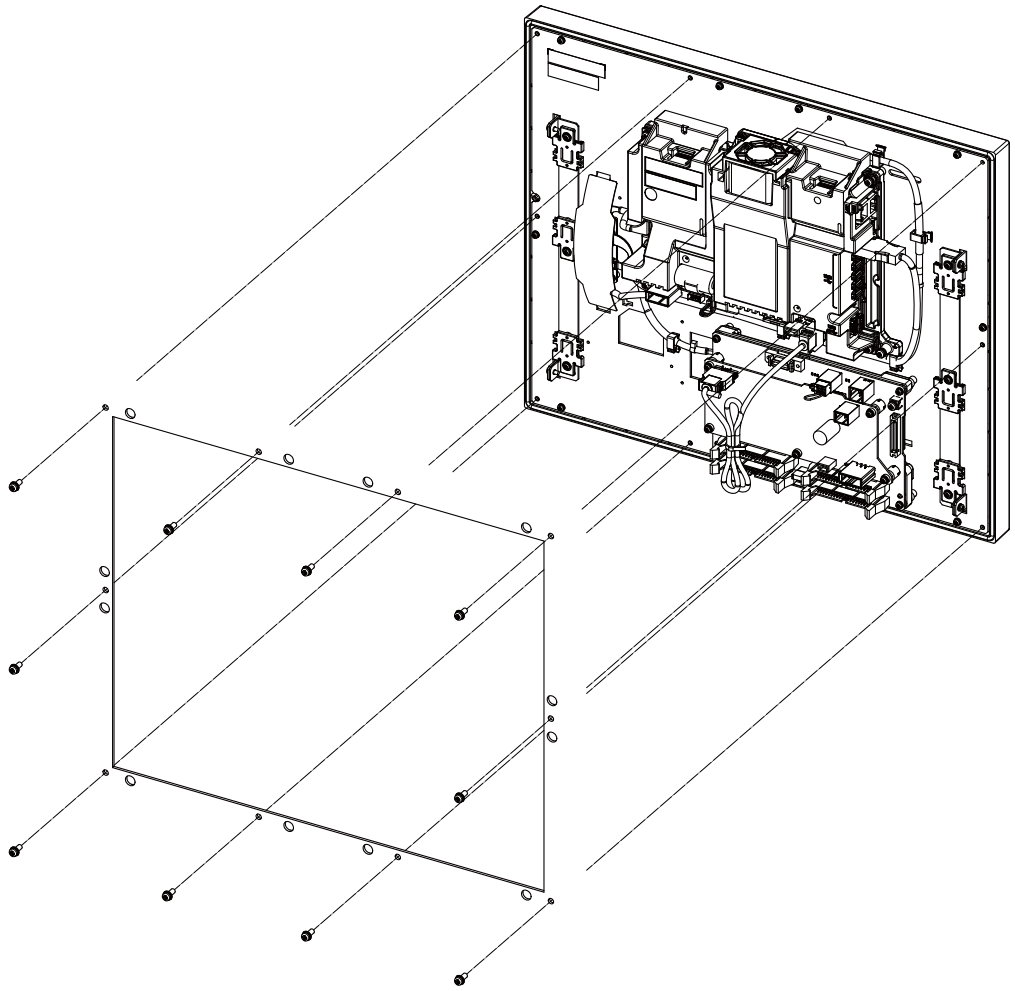

Fixing screw: Use M4×10 with spring washer and plain washer (10 screws).

6.4 Personal Computer Unit

Replacement procedures

Always replace the personal computer unit with the control unit (machine) power turned OFF.

(1) Check that the machine power is turned OFF. (If the power is not OFF, turn it OFF.)

(2) Open the operation panel door.

(3) Disconnect all the cables connected to the personal computer unit.

(4) Remove the screws fixing the personal computer unit and take the personal computer unit off.

(5) Install a new personal computer unit with fixing screws.

(6) Connect all the cables connected to the personal computer unit. (Always connect the cables to the designated connectors.)

(7) Confirm that all the cables are correctly connected and close the operation panel door.

⚠ CAUTION

1. Incorrect connections could cause devices to damage. Connect the cables to designated connectors.

2. Do not replace the personal computer unit while the power is ON.

3. Do not connect or disconnect the cables between units while the power is ON.

■FCU8-PC232 (M800VW/M80VW Series)

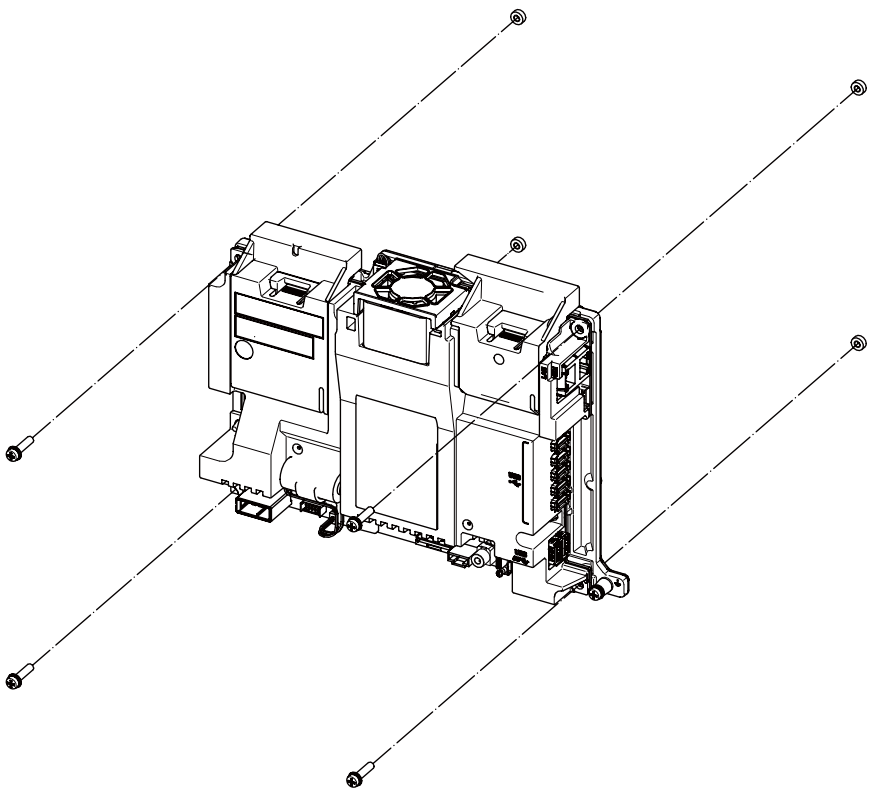

Mounting screw size: M4

6.5 Keyboard Unit

Replacement procedures

Always replace the keyboard unit with the control unit (machine) power turned OFF.

(1) Check that the machine power is turned OFF. (If the power is not OFF, turn it OFF.)

(2) Open the operation panel door.

(3) Disconnect all the cables connected to the keyboard unit.

(4) Remove the screws fixing the keyboard unit and take the keyboard unit off.

(5) Install a new keyboard unit with fixing screws.

(6) Connect all the cables connected to the keyboard unit. (Always connect the cables to the designated connectors.)

(7) Confirm that all the cables are correctly connected and close the operation panel door.

⚠ CAUTION

1. Incorrect connections could cause devices to damage. Connect the cables to designated connectors.

2. Do not replace the keyboard unit while the power is ON.

3. Do not connect or disconnect the cables between units while the power is ON.

■**FCU8-KB025/KB026/KB028**

[Fixed on the front side]

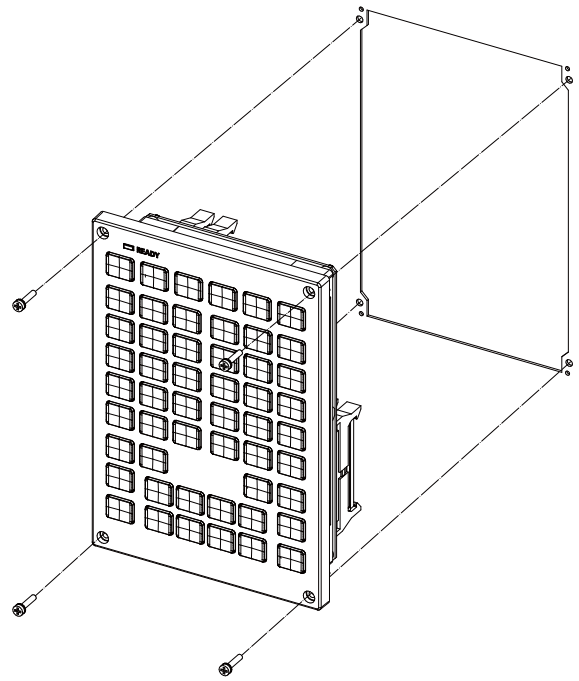

Fixing screw: Cheese head screw M3 (4 pcs)
(Fixing screws are provided with the unit.)

[Fixed on the back side]

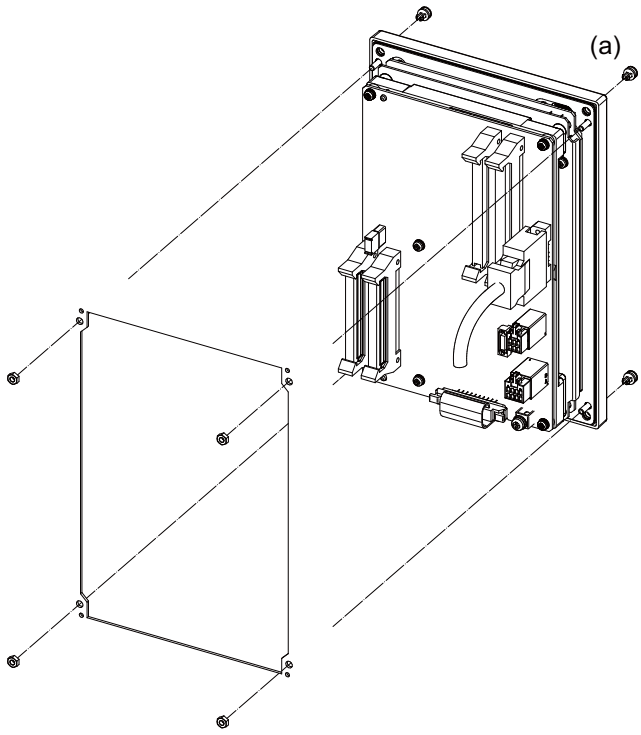

Fixture: M3 nut (4 pcs)
(4 pcs of the screw caps (a) are provided with the unit.)

■**FCU8-KB029**

[Fixed on the front side]

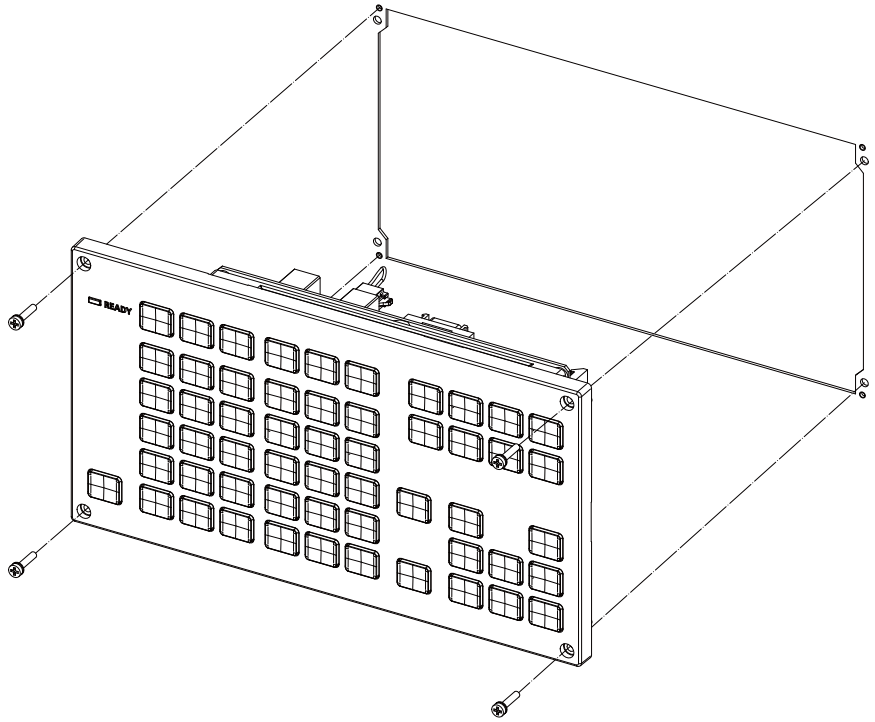

Fixing screw: Cheese head screw M3 (4 pcs)
(Fixing screws are provided with the unit.)

[Fixed on the back side]

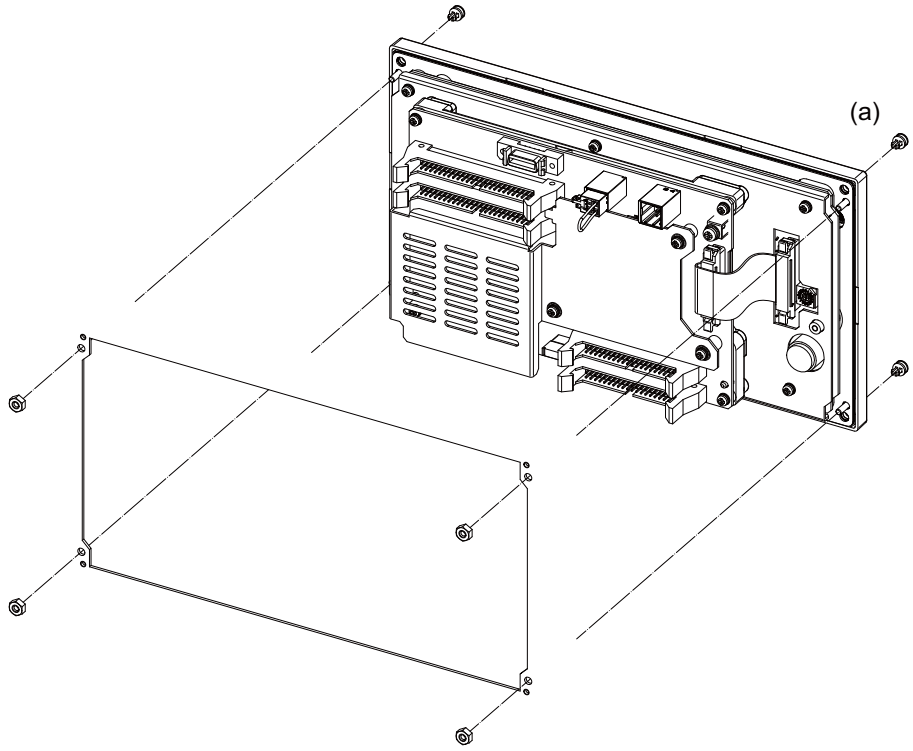

Fixture: M3 nut (4 pcs)
(4 pcs of the screw caps (a) are provided with the unit.)

■**FCU8-KB041/KB046**

[Fixed on the front side]

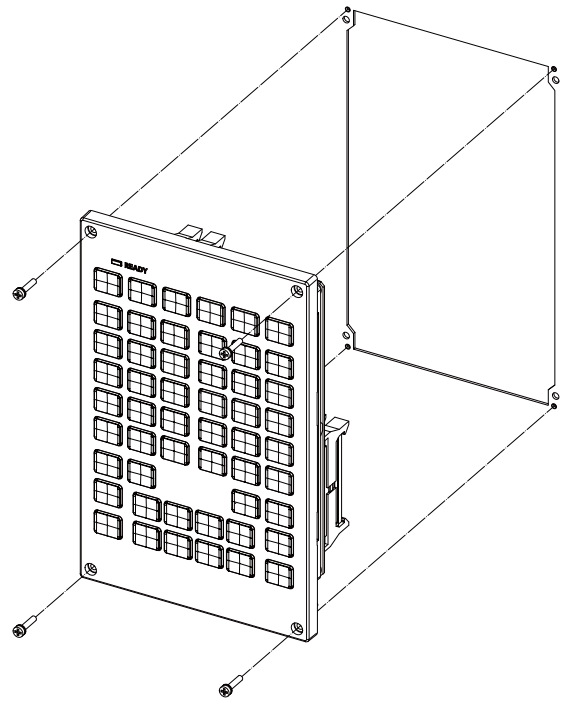

Fixing screw: Cheese head screw M3 (4 pcs)
(Fixing screws are provided with the unit.)

[Fixed on the back side]

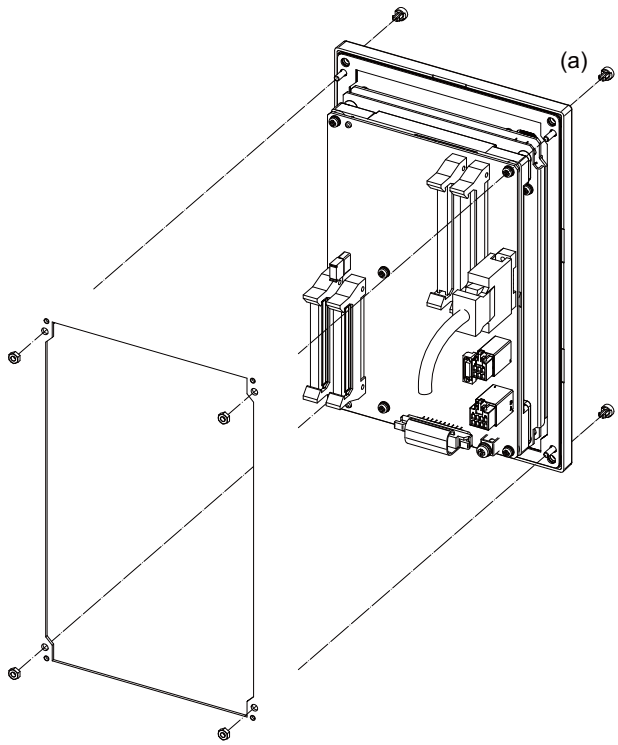

Fixture: M3 nut (4 pcs)
(4 pcs of the screw caps (a) are provided with the unit.)

■**FCU8-KB047**

[Fixed on the front side]

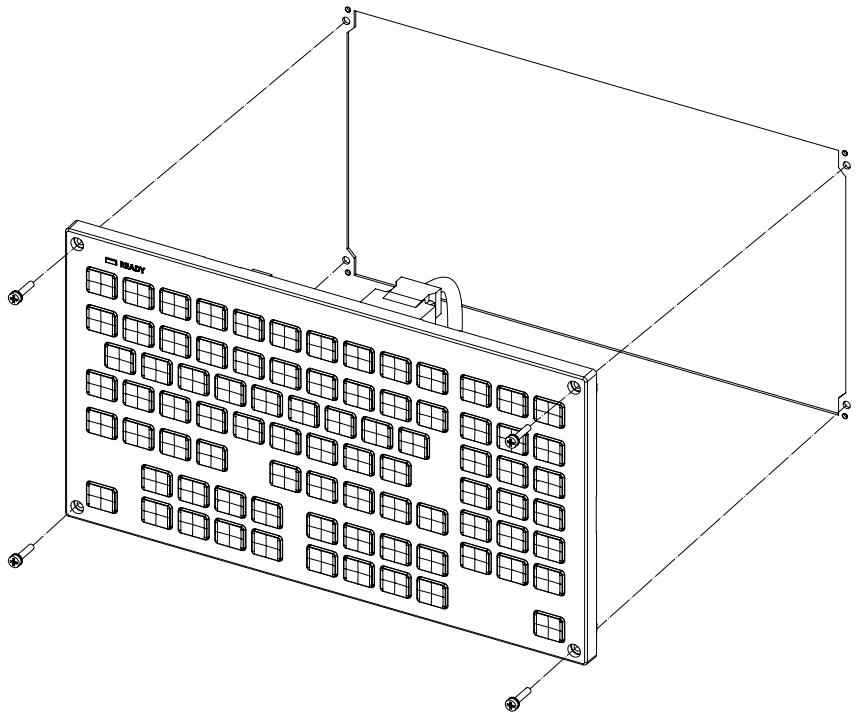

Fixing screw: Cheese head screw M3 (4 pcs)
(Fixing screws are provided with the unit.)

[Fixed on the back side]

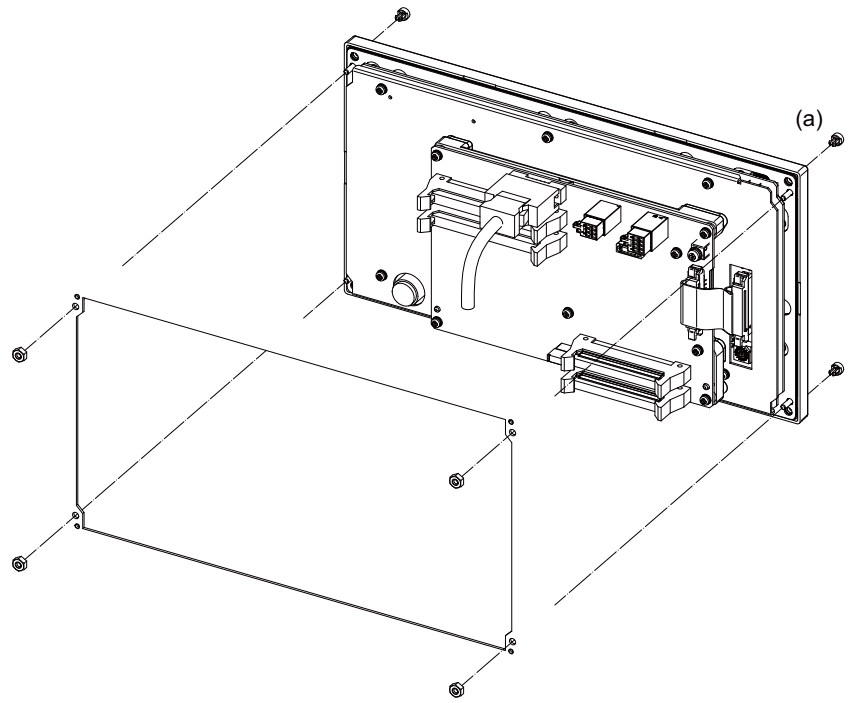

Fixture: M3 nut (4 pcs)
(4 pcs of the screw caps (a) are provided with the unit.)

■**FCU8-KB048**

[Fixed on the front side]

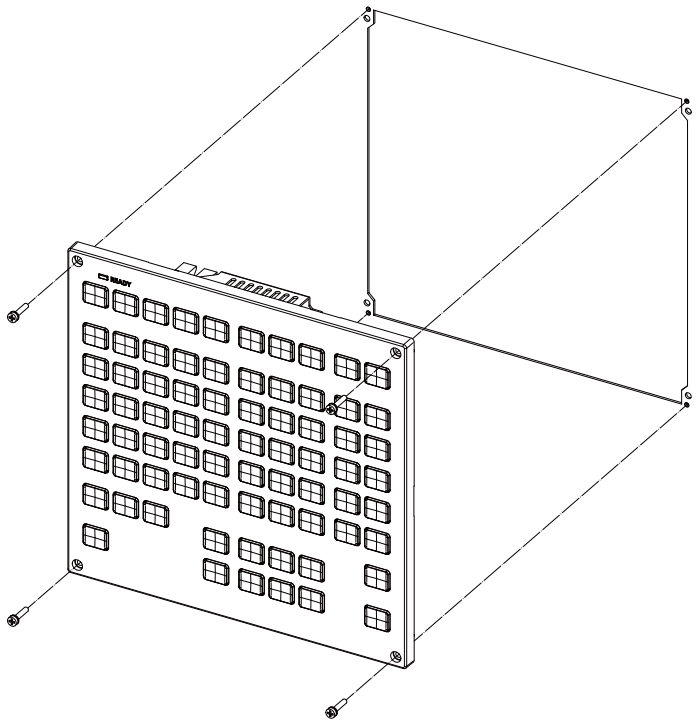

Fixing screw: Cheese head screw M3 (4 pcs)
(Fixing screws are provided with the unit.)

[Fixed on the back side]

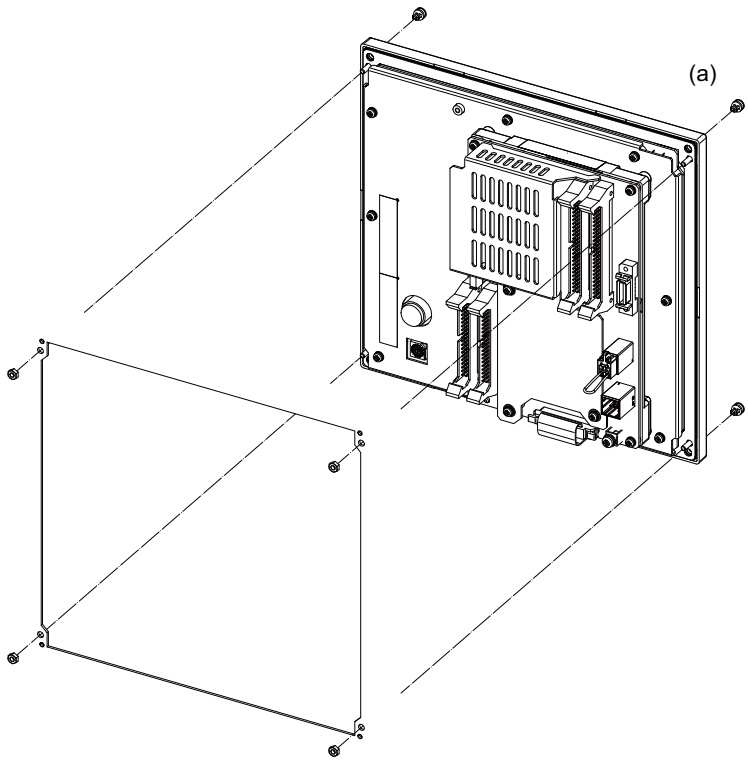

Fixture: M3 nut (4 pcs)
(4 pcs of the screw caps (a) are provided with the unit.)

■**FCU8-KB083**

[Fixed on the front side]

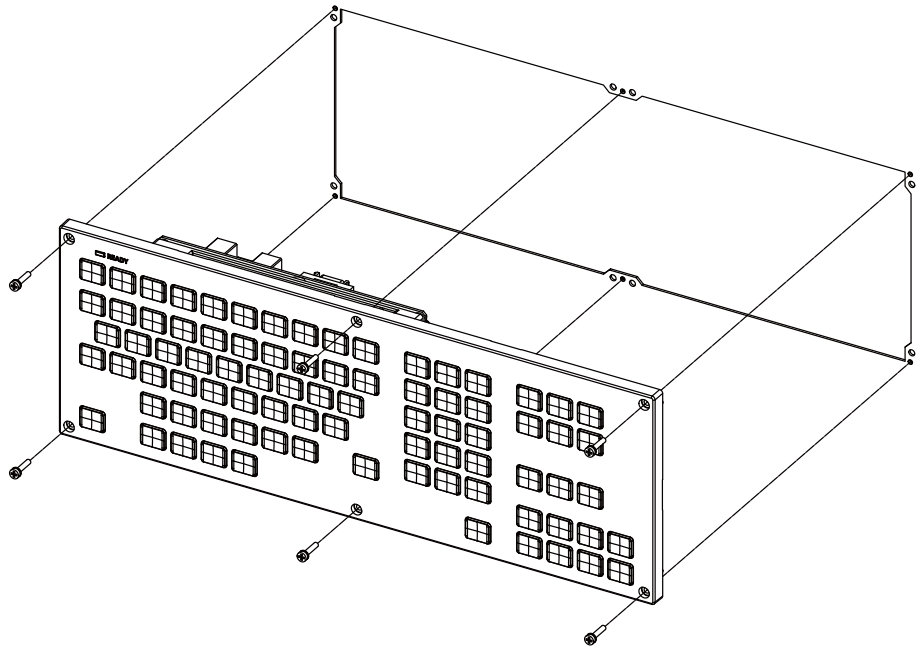

Fixing screw: Cheese head screw M3 (6 pcs)
(Fixing screws are provided with the unit.)

[Fixed on the back side]

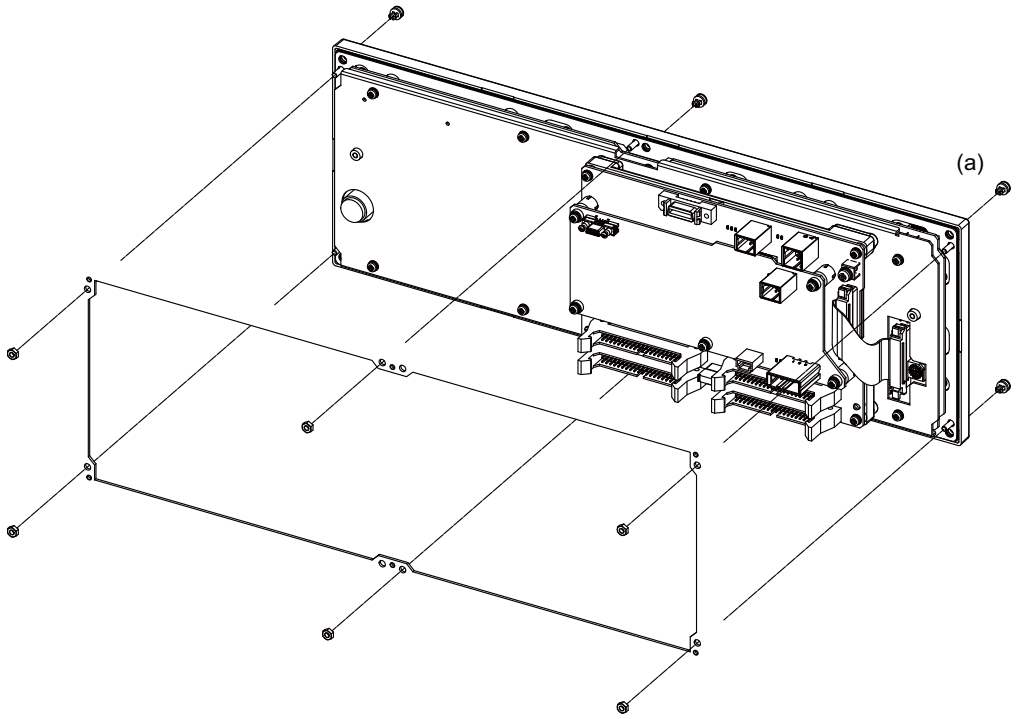

Fixture: M3 nut (6 pcs)
(6 pcs of the screw caps (a) are provided with the unit.)

■**FCU8-KB091**

[Fixed on the front side]

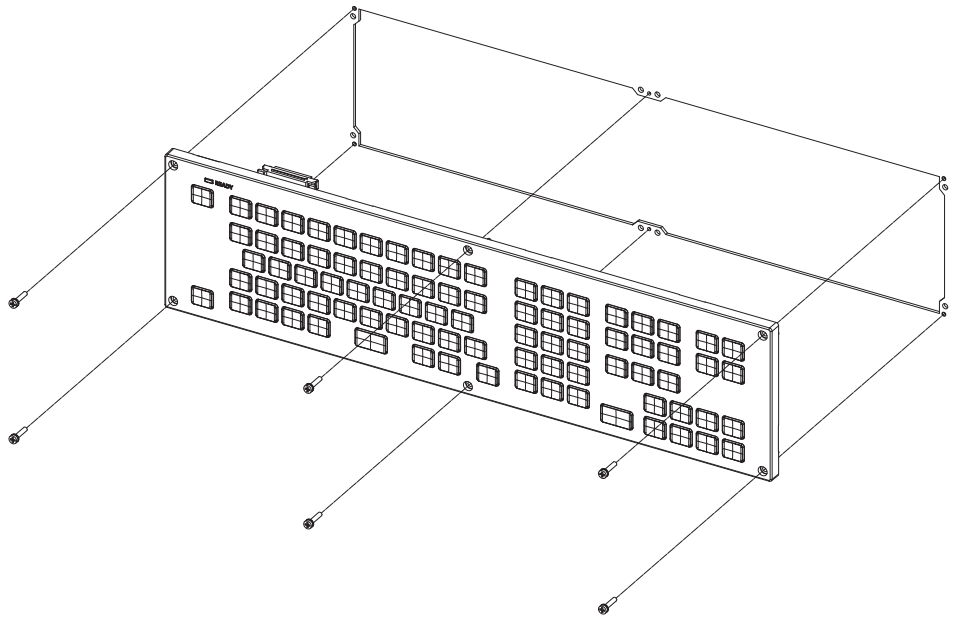

Fixing screw: Cheese head screw M3 (6 pcs)
(Fixing screws are provided with the unit.)

[Fixed on the back side]

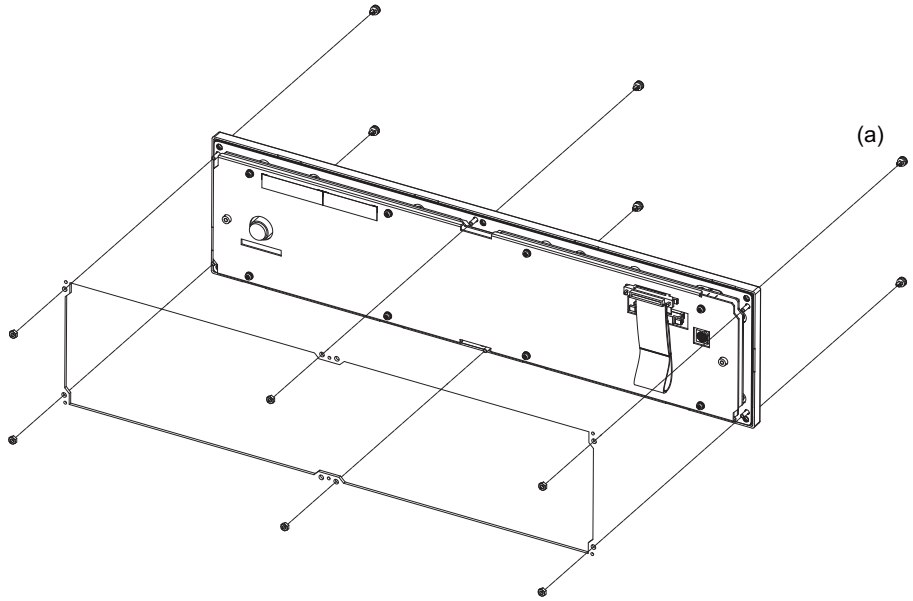

Fixture: M3 nut (6 pcs)
(6 pcs of the screw caps (a) are provided with the unit.)

6.6 Operation Panel I/O Unit

Replacement procedures (M800VW/M80VW Series)

Always replace the operation panel I/O unit with the control unit (machine) power turned OFF.

(1) Check that the machine power is turned OFF. (If the power is not OFF, turn it OFF.)

(2) Open the operation panel door.

(3) Disconnect all the cables connected to the operation panel I/O unit.

(4) Remove the screws fixing the operation panel I/O unit, and take the unit off.

(5) Install a new operation panel I/O unit with fixing screws. (Fix so that the operation panel I/O unit connector slot is placed at the lower part.)

(6) Connect all the cables back to the operation panel I/O unit. (Always connect the cables to the designated connectors.)

(7) Confirm that all the cables are correctly connected and close the operation panel door.

> **⚠ CAUTION**
>
> **1. Incorrect connections could cause devices to damage. Connect the cables to designated connectors.**
>
> **2. Do not replace the operation panel I/O unit while the power is ON.**
>
> **3. Do not connect or disconnect the cables between units while the power is ON.**

■FCU8-DX830/FCU8-DX834/FCU8-DX837 (M800VW/M80VW Series)

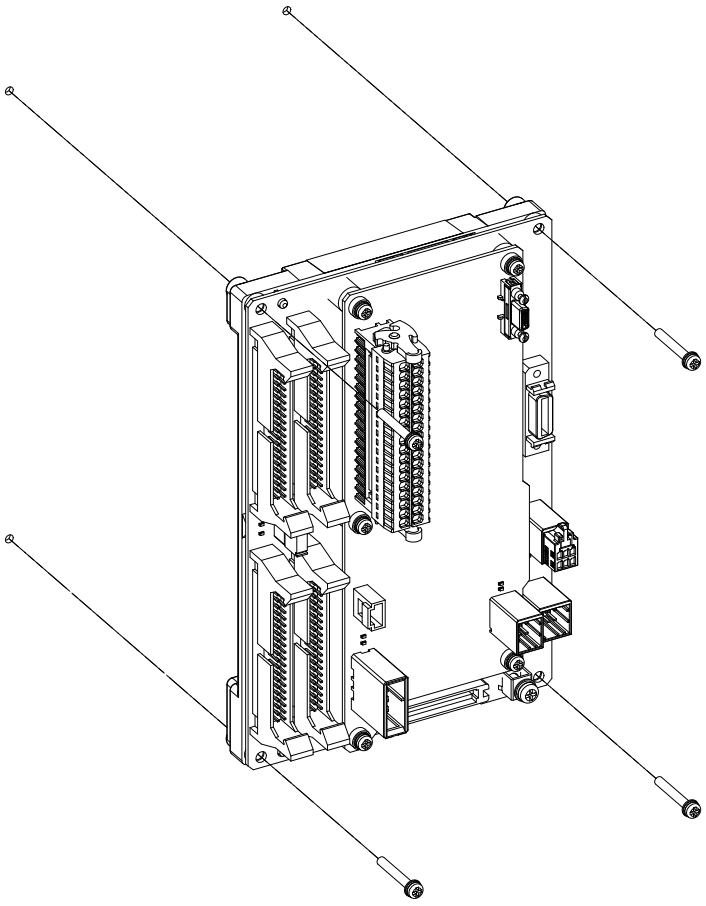

Fixing screw: M3 (4 pcs)

[Installation on the back side of the keyboard]

Operation panel I/O unit can be installed on the back side of the keyboard.

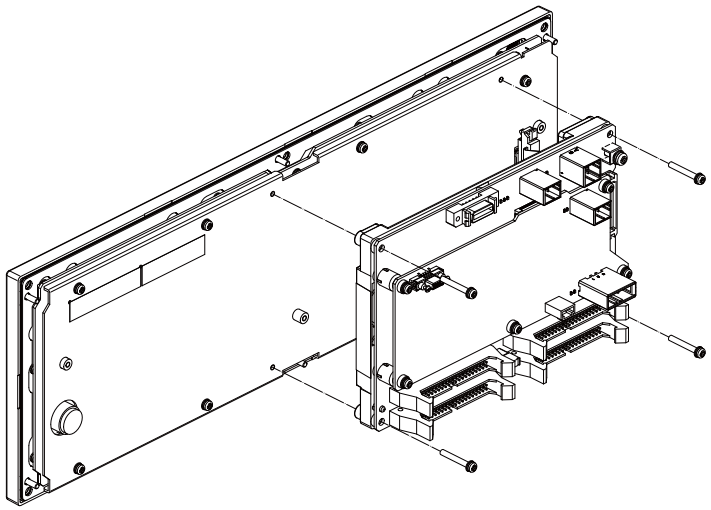

Fixing screw: M3 (4 pcs)

Replacement procedures (M800VS/M80V Series)

Always replace the operation panel I/O unit with the control unit (machine) power turned OFF.

(1) Check that the machine power is turned OFF. (If the power is not OFF, turn it OFF.)

(2) Open the operation panel door.

(3) Disconnect all the cables connected to the operation panel I/O unit.

(4) Remove the screws fixing the operation panel I/O unit, and take the unit off.

(5) Install a new operation panel I/O unit with fixing screws. (Fix so that the NCKB connector slot is placed at the bottom for the horizontally arranged keyboard and at the right for the vertically arranged keyboard.)

(6) Connect all the cables back to the operation panel I/O unit. (Always connect the cables to the designated connectors.) Insert NCKB cable by fitting Δ1st pin position with the connector.

(7) Confirm that all the cables are correctly connected and close the operation panel door.

⚠ CAUTION

1. Incorrect connections could cause devices to damage. Connect the cables to designated connectors.

2. Do not replace the operation panel I/O unit while the power is ON.

3. Do not connect or disconnect the cables between units while the power is ON.

■FCU8-DX731/FCU8-DX750/FCU8-DX760/FCU8-DX761/FCU8-DX834 (M800VS/M80V Series)

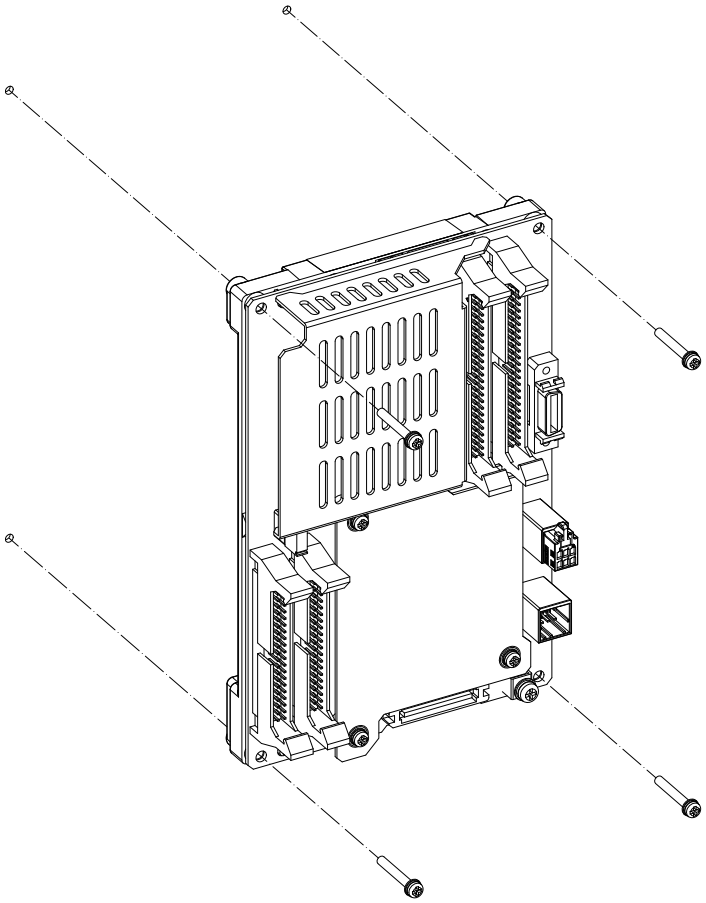

Fixing screw: M3 (4 pcs)

[Installation on the back side of the keyboard]

Operation panel I/O unit can be installed on the back side of the keyboard.

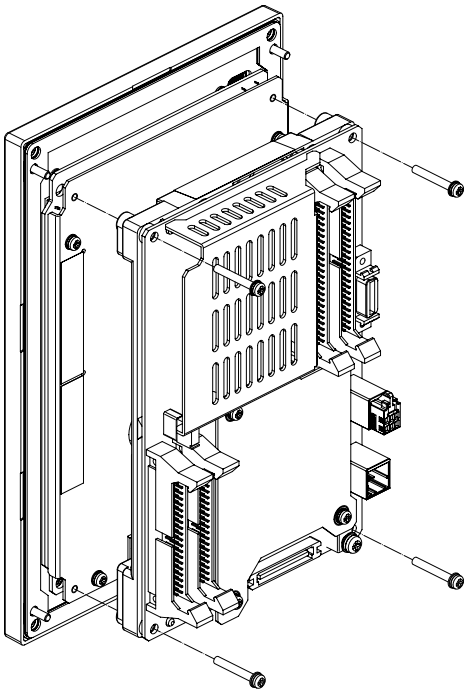

Fixing screw: M3 x 25 (4 pcs)

[Installation on the back side of the 19-type display unit]

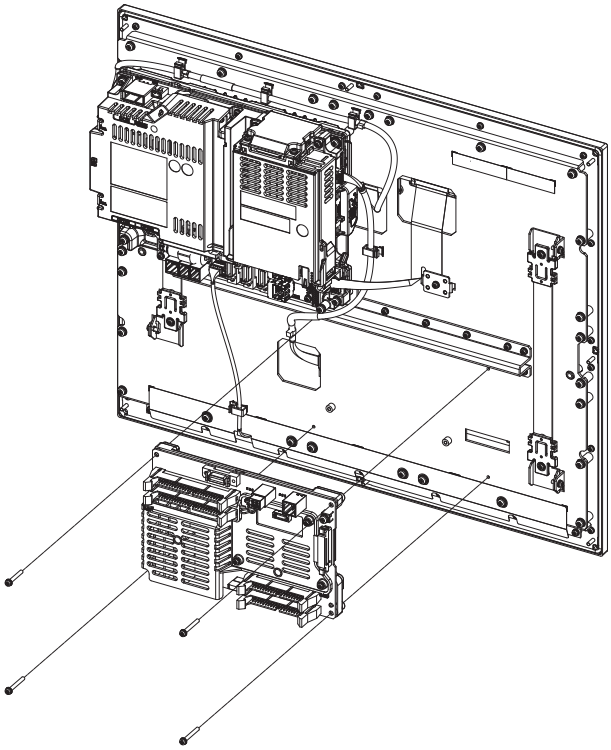

Fixing screw: M3 x 25 (4 pcs)

6.7 Remote I/O Unit

Replacement procedures

Always replace the remote I/O unit with the machine power turned OFF.

(1) Check that the machine power is turned OFF. (If the power is not OFF, turn it OFF.)

(2) Open the operation panel door.

(3) Disconnect all the cables connected to the remote I/O unit.

(4) Remove the screws fixing the remote I/O unit and take the remote I/O unit off. Or, release the lock by pulling down the slide bar of the remote I/O unit fixed to DIN rail, and then take the remote I/O unit off.

(5) Install a new remote I/O unit with fixing screws.
Or, install a new remote I/O unit to DIN rail and lock it by pulling up the slide bar of the remote I/O unit.

(6) Connect all the cables back to the remote I/O unit.

(7) Confirm that all the cables are correctly connected and close the operation panel door.

⚠ CAUTION

1. Incorrect connections could cause devices to damage. Connect the cables to designated connectors.

2. Do not replace the remote I/O unit while the power is ON.

3. Do not connect or disconnect the cables between units while the power is ON.

■FCU8-DX220/FCU8-DX230/FCU8-DX231/FCU8-DX202/FCU8-DX213/FCU8-DX213-1/FCU8-DX654/FCU8-DX654-1/ FCU8-DX408/FUC8-DX409

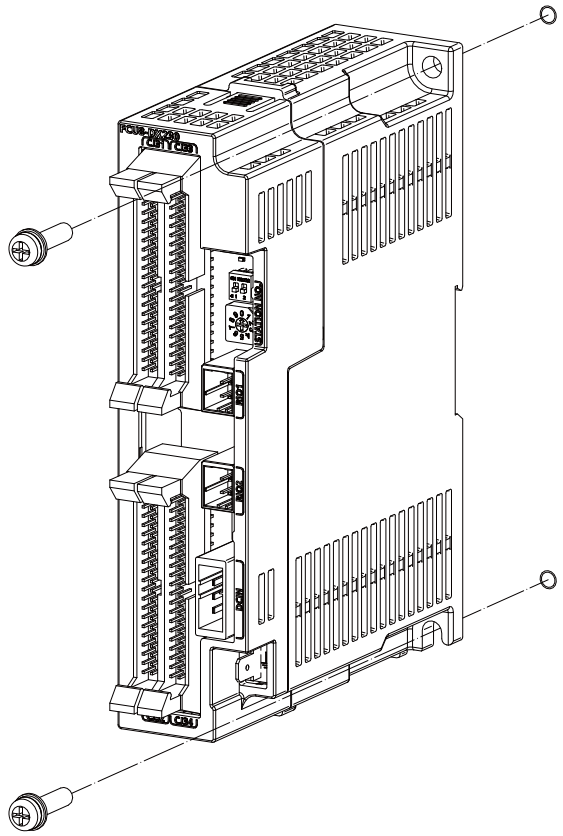

Mounting screw size: M5

■**FCU8-DX651**

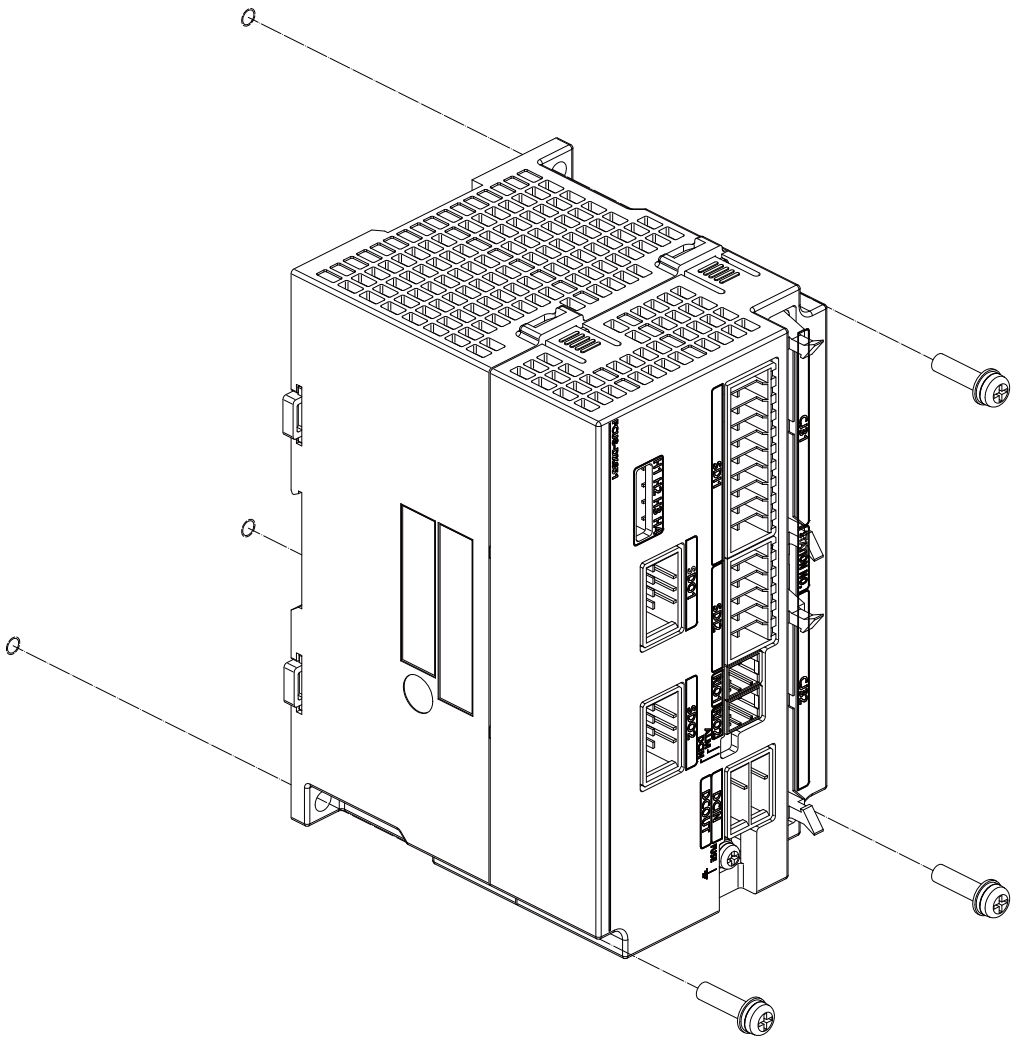

Mounting screw size: M5

6.8 Laser I/F Unit

Replacement procedures

Always replace the laser I/F unit with the machine power turned OFF.

(1) Check that the machine power is turned OFF. (If the power is not OFF, turn it OFF.)

(2) Open the operation panel door.

(3) Disconnect all the cables connected to the laser I/F unit.

(4) Remove the screws fixing the laser I/F unit and take the laser I/F unit off. Or, release the lock by pulling down the slide bar of the laser I/F unit fixed to DIN rail, and then take the laser I/F unit off.

(5) Install a new laser I/F unit with fixing screws.
Or, install a new laser I/F unit to DIN rail and lock it by pulling up the slide bar of the laser I/F unit.

(6) Connect all the cables back to the laser I/F unit.

(7) Confirm that all the cables are correctly connected and close the operation panel door.

> ⚠ **CAUTION**
>
> **1. Incorrect connections could cause devices to damage. Connect the cables to designated connectors.**
>
> **2. Do not replace the laser I/F unit while the power is ON.**
>
> **3. Do not connect or disconnect the cables between units while the power is ON.**

■FCU8-DX522-001

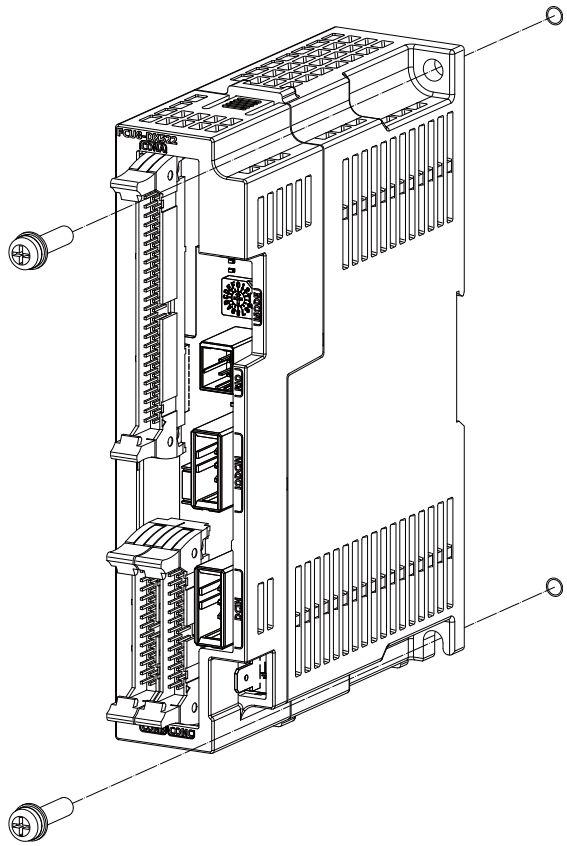

Mounting screw size: M5

6.9 Function Expansion Unit

⚠ CAUTION

1. Incorrect connections could cause devices to damage. Connect the cables to designated connectors.

2. Do not replace the function expansion unit/card while the power is ON.

3. Do not connect or disconnect the cables between units while the power is ON.

[M800VW/M80VW Series]

Connect to the appropriate function expansion slot corresponding to the function expansion unit used.

Function expansion unit	Function expansion slot
FCU8-EX544	EXT1, EXT2
FCU8-EX561, FCU8-EX563, FCU8-EX564 FCU8-EX565, FCU8-EX568, FCU8-EX744	EXT3, EXT4

Installation procedures

Always install the function expansion unit with the machine power turned OFF.

(1) Check that the machine power is turned OFF. (If the power is not OFF, turn it OFF.)
(2) Open the electric cabinet door.
(3) Push the tabs at the top and bottom of the cover attached to the function expansion slot of the control unit.
(4) Remove the cover of the function expansion slot.
(5) Insert the function expansion unit into the function expansion slot.
(6) Push the function expansion unit firmly until it is fixed with the tabs.
(7) Connect the cable to the function expansion unit.
(8) Confirm that all the cables are correctly connected and close the electric cabinet door.

Note

(1) On FCU8-EX565, EtherNet/IP function is supported by the "LAN1" port only. Do not use LAN2 because it does not support EtherNet/IP function.

Removal procedures

(1) Check that the machine power is turned OFF. (If the power is not OFF, turn it OFF.)
(2) Open the electric cabinet door.
(3) Disconnect the cable from the function expansion unit.
(4) Press the tabs on the top and bottom of the function expansion unit.
(5) Remove the function expansion unit by pulling it frontward.
(6) Install the cover to the function expansion slot.
(7) Close the electric cabinet door.

[M800VS/M80V Series]

Installation procedures

Always install the expansion unit (FCU8-EX56x, FCU8-EX744, FCU8-EX752) with the machine power turned OFF.

■Option relay unit (FCU8-EX704)

(1) Check that the machine power is turned OFF. (If the power is not OFF, turn it OFF.)

(2) Open the operation panel door.

(3) Disconnect the LAN cable and SIO cable of control unit to facilitate the installation.

(4) Insert the function expansion unit into the option relay unit (FCU8-EX704).
Fix the image input expansion unit (FCU8-EX752) with two M3 x 6 countersunk screws.

(5) Remove the back cover of the control unit.

(6) Fix the option relay unit to the control unit with three screws of M3 x 25.

(7) Connect the cable to the function expansion unit.

(8) Connect the LAN cable and SIO cable to the control unit.

(9) Confirm that all the cables are correctly connected and close the operation panel door.

■Option relay unit (FCU8-EX705)

(1) Check that the machine power is turned OFF. (If the power is not OFF, turn it OFF.)

(2) Open the operation panel door.

(3) Disconnect the LAN cable and SIO cable of control unit to facilitate the installation.

(4) Open the cover of the option relay unit (FCU8-EX705).

(5) Insert the function expansion unit into FCU8-EX705.
Make sure to insert the image input expansion unit (FCU8-EX752) into EXT1.
Fix the image input expansion unit with two M3 x 6 countersunk screws.

(6) Close the cover of FCU8-EX705.

(7) Remove the back cover of the control unit.

(8) Fix the option relay unit to the control unit with three screws of M3 x 25.

(9) Connect the cable to the function expansion unit.

(10) Connect the LAN cable and SIO cable to the control unit.

(11) Confirm that all the cables are correctly connected and close the operation panel door.

Removal procedures

(1) Check that the machine power is turned OFF. (If the power is not OFF, turn it OFF.)
(2) Open the operation panel door.
(3) Disconnect the LAN cable and SIO cable of control unit to facilitate the removal.
(4) Disconnect the cable from the function expansion unit. (*1)
(5) Remove three screws fixing the option relay unit to the control unit.
(6) Install the back cover of the control unit.
(7) Connect the LAN cable and SIO cable to the control unit.
(8) Confirm that all the cables are correctly connected and close the operation panel door.

Replacing the option relay unit: FCU8-EX704 (for 1 slot) -> FCU8-EX705 (for 2 slots)

(1) Disconnect the cables connected to the function expansion unit. (*1)
(2) Remove three screws fixing the option relay unit to the control unit.
(3) Take the function expansion unit out while pressing the right and left tabs.
From the image input expansion unit (FCU8-EX752), remove two M3 x 6 countersunk screws.
(4) Install FCU8-EX705 according to the installation procedures "Option relay unit (FCU8-EX705)".

(*1) From the image input expansion unit, disconnect the cables with the following procedures.

FCU8-EX752

(a) Loosen cable ties and remove them.
(The cable ties are reusable. Do not cut cable ties because they can be used for re-bundling.)

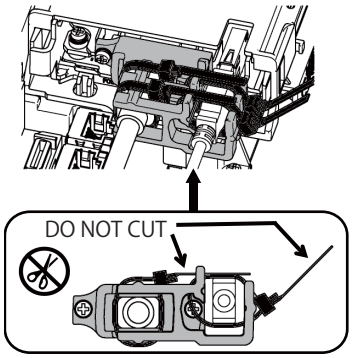

(b) Remove cables.

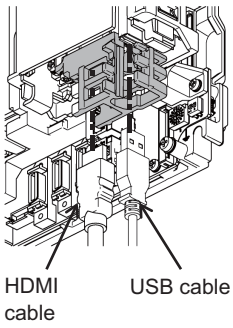

(c) Remove cable holder.

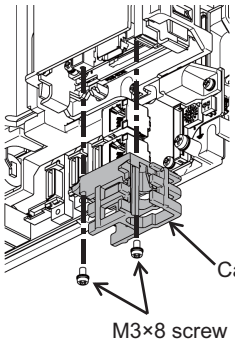

(d) Remove LVDS cable. (Only when it is connected.)

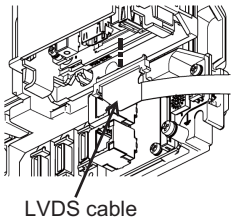

6.10 Functional Safety Expansion Unit [M80V]

> **⚠ CAUTION**
>
> **1. Incorrect connections could cause devices to damage. Connect the cables to designated connectors.**
>
> **2. Do not replace the expansion unit/card while the power is ON.**
>
> **3. Do not connect or disconnect the cables between units while the power is ON.**

Installation procedures

Always install the functional safety expansion unit with the machine power turned OFF.

(1) Check that the machine power is turned OFF. (If the power is not OFF, turn it OFF.)
(2) Open the operation panel.
(3) Open the cover of the control unit.
(4) Fix the functional safety expansion unit to the control unit with two screws.
(5) Close the cover of the control unit.
(6) Confirm that all the cables are correctly connected and close the operation panel.

Removal procedures

(1) Check that the machine power is turned OFF. (If the power is not OFF, turn it OFF.)
(2) Open the operation panel.
(3) Open the cover of the control unit.
(4) Remove two screws fixing the functional safety expansion unit to the control unit.
(5) Close the cover of the control unit.
(6) Confirm that all the cables are correctly connected and close the operation panel.

6.11 Built-in Disk of the Display Unit

> **⚠ CAUTION**
>
> **1. Incorrect connections could cause devices to damage. Connect the cables to designated connectors.**
>
> **2. Do not replace the built-in disk of the display unit while the power is ON.**
>
> **3. Do not connect or disconnect the cables between units while the power is ON.**

Replacement procedures

Always replace the built-in disk of the display unit with the control unit (machine) power turned OFF.

(1) Check that the machine power is turned OFF. (If the power is not OFF, turn it OFF.)

(2) Open the operation panel door.

(3) Open the personal computer unit back cover.

(4) Press the eject lever of the built-in disk of the display unit to eject the built-in disk of the display unit.

(5) Insert a new built-in disk of the display unit.
(Insert it so that the nameplate sticker of the built-in disk of the display unit faces to the PCB.)

(6) Close the back cover of the personal computer unit.

(7) Close the operation panel door.

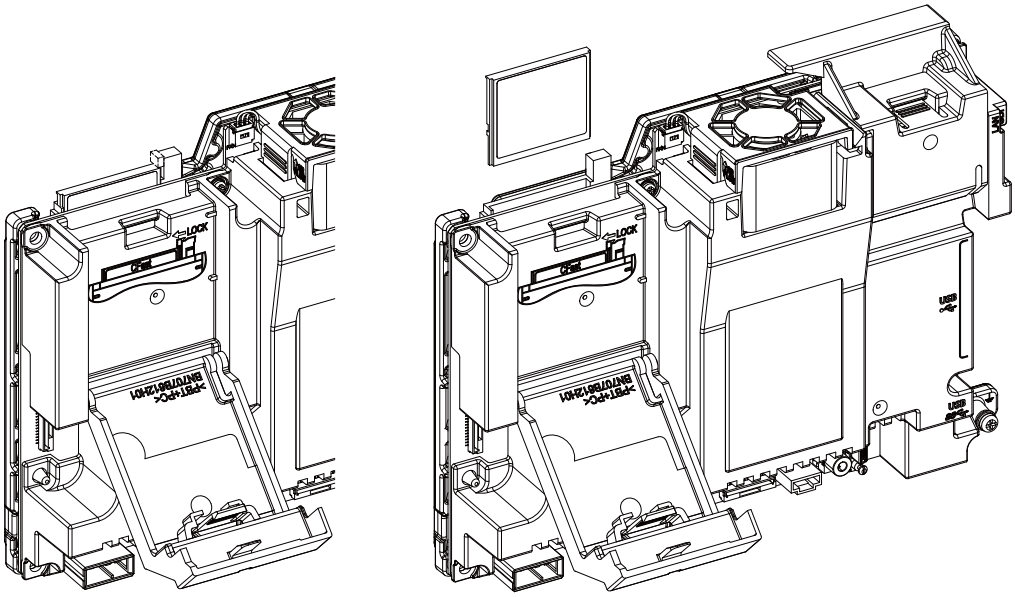

6.12 SD Card

Replacement of front-side SD card

(1) Open the lower cover on the display unit right end.

(2) Insert/eject the SD card. (Insert it so that the top surface faces to the observer's right side.)

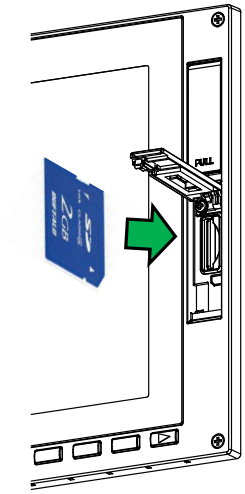

Replacement of back-side SD card

Check that the machine power is turned OFF. (If the power is not OFF, turn it OFF.)

(1) Check that the machine power is turned OFF.

(2) Open the electric cabinet door.

(3) Open the cover on the back side of the control unit.

(4) Insert/eject the SD card. (Insert it so that the top surface faces to the observer's right side.)

(5) Close the back cover.

(6) Close the electric cabinet door.

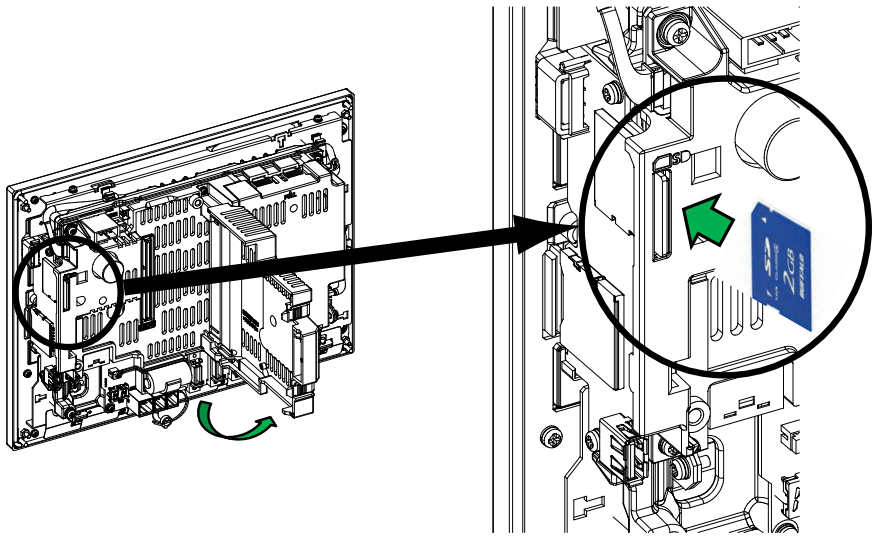

Note

(1) Do not eject an SD card during the data reading/writing.

(2) MITSUBISHI is unable to guarantee the machine operation when a commercially available SD card is used. In that case, performance check must be made carefully by MTB.

6.13 USB memory

Replacement of front-side USB memory

(1) Open the upper cover on the display unit right end.

(2) Insert/remove the USB memory.

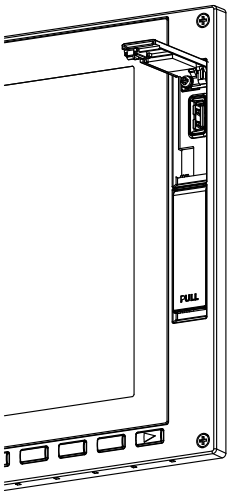

Replacement of back-side USB memory

Always replace the back-side USB memory with the machine power turned OFF.

(1) Check that the machine power is turned OFF.

(2) Open the electric cabinet door.

(3) Insert/remove the USB memory.

(4) Close the electric cabinet door.

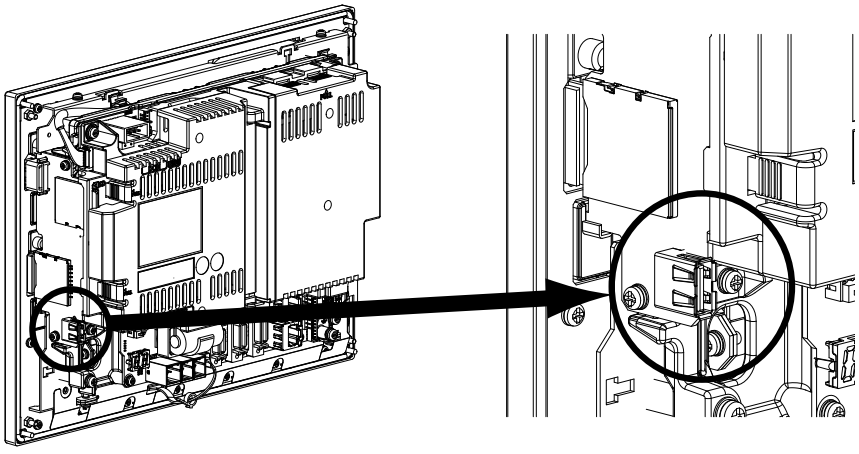

Note

(1) Do not remove a USB memory during the data reading/writing.

(2) Do not connect devices other than USB memories. When using a commercially available USB memory, performance check must be made by MTB.

6.14 Machine Operation Panel

Replacement procedures

Be sure to turn the control unit (machine) power to OFF when replacing the machine operation panel manufactured by Mitsubishi Electric.

(1) Check that the machine power is turned OFF. (If the power is not OFF, turn it OFF.)

(2) Open the operation panel door.

(3) Disconnect all the cables connected to the machine operation panel.

(4) Remove the screws fixing the machine operation panel and take the machine operation panel off.

(5) Install a new machine operation panel with fixing screws.

(6) Connect all the cables connected to the machine operation panel. (Always connect the cables to the designated connectors.)

(7) Confirm that all the cables are correctly connected and close the operation panel door.

⚠ CAUTION

1. Incorrect connections could cause devices to damage. Connect the cables to designated connectors.

2. Do not replace the machine operation panel while the power is ON.

3. Do not connect or disconnect the cables between units while the power is ON.

■FCU8-KB921/KB922/KB923/KB924/KB925/KB926

[Fixed on the front side]

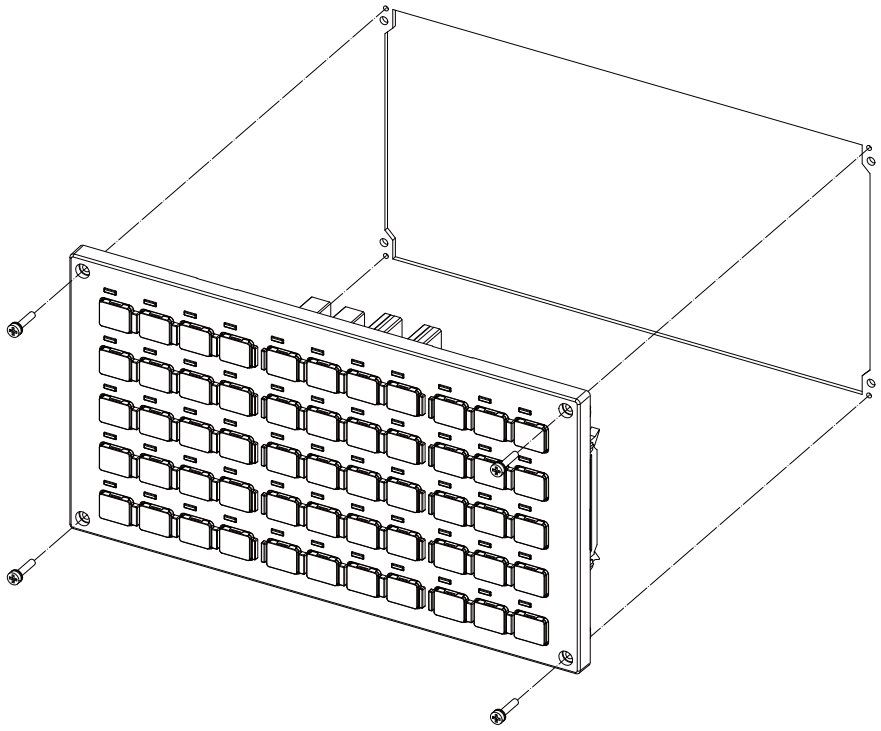

Fixing screw: Cheese head screw M3 (4 pcs)
(Fixing screws are provided with the unit.)

[Fixed on the back side]

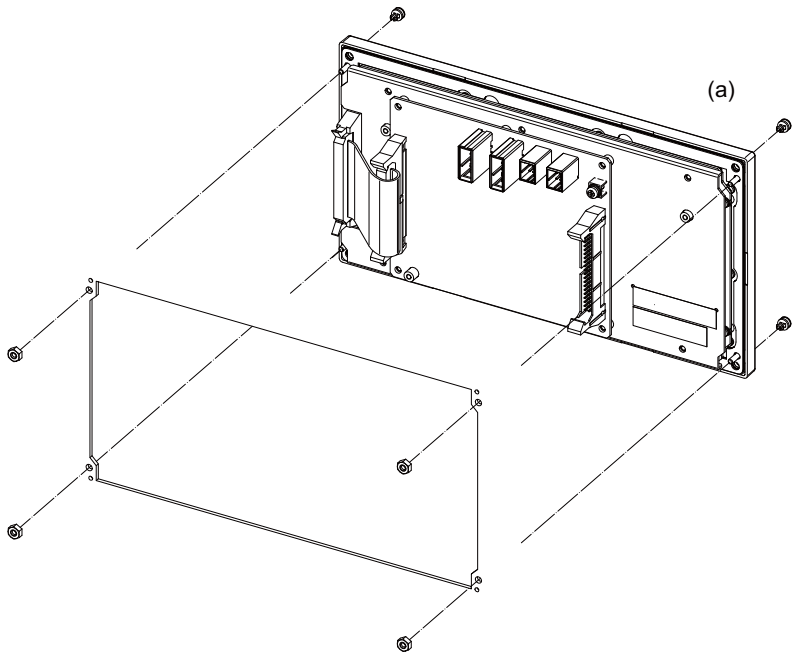

Fixture: M3 nut (4 pcs)
(4 pcs of the screw caps (a) are provided with the unit.)

■**FCU8-KB931/FCU8-KB941**

[Fixed on the front side]

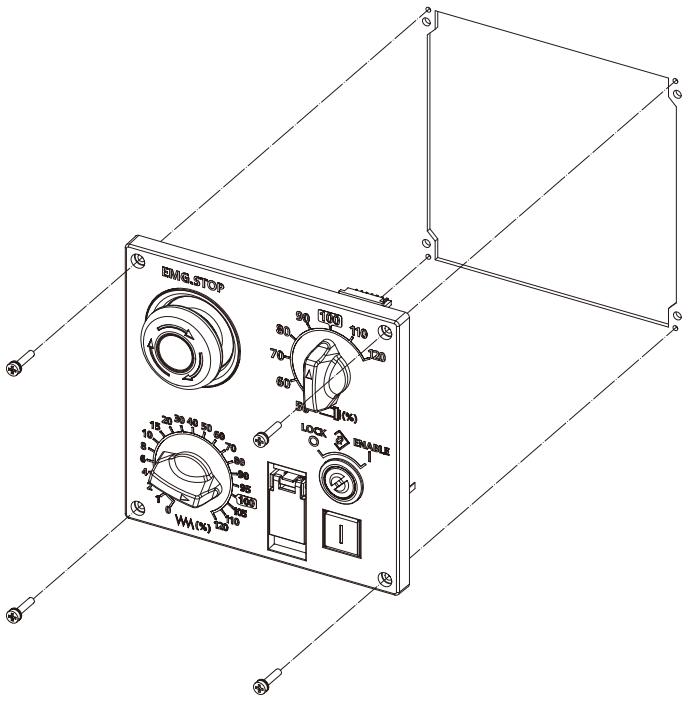

Fixing screw: Cheese head screw M3 (4 pcs)
(Fixing screws are provided with the unit.)

[Fixed on the back side]

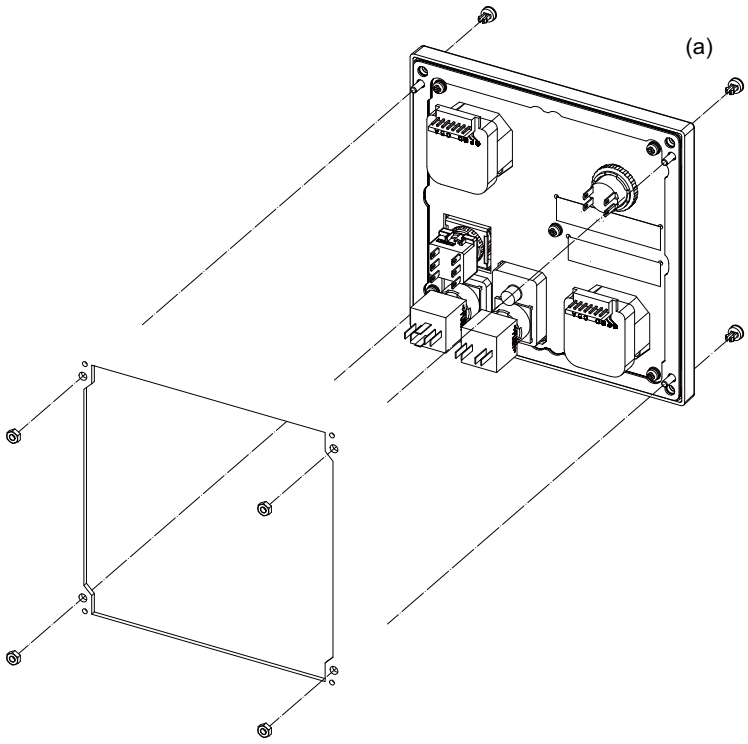

Fixture: M3 nut (4 pcs)
(4 pcs of the screw caps (a) are provided with the unit.)

Revision History

Date of revision	Manual No.	Revision details
Mar. 2021	IB(NA)1501617-A	First edition created.
Jul. 2021	IB(NA)1501617-B	Contents were revised to correspond to Mitsubishi Electric CNC M800VS/M80V Series. Contents were revised to correspond to Mitsubishi Electric CNC M800V/M80V Series software version A1. The following chapters were added. •1.2.3 General Connection Diagram [M800VS] •1.2.4 General Connection Diagram [M80V] •1.2.5 Differences in Connection Depending on the Operation Panel I/O Unit •1.2.6 Connecting a Pulse-controlled Inverter [M80V] •6.9 Functional Safety Expansion Unit [M80V] The following chapters were changed. •1.1 System Basic Configuration Drawing •1.3.1 System Configuration Screen •1.4.1 Control Unit •1.4.2 Personal Computer Unit •1.4.3 Operation Panel I/O Unit •1.4.6 7-segment LEDs on the Control Unit •2.2.3.1 Control Unit Battery •2.2.3.2 Personal Computer Unit Battery [M800VW/M80VW] •2.2.3.3 Personal Computer Unit Cooling Fan [M800VW/M80VW] •2.2.4 Replacing Fuse •4.3.2 Alarm History •4.5.1 Self Diagnosis Screen •4.6 Diagnosis Based on the Data Sampling Screen •4.14.1.1 Statistical Information of Packet Transmission and Reception •6.1 Data Backup and Restoration •6.1.2 All Restoration •6.2 Control Unit •6.3 Display Unit •6.4 Personal Computer Unit •6.5 Keyboard Unit •6.6 Operation Panel I/O Unit •6.8 Function Expansion Unit The following chapter numbers were changed. •6.10 Built-in Disk of the Display Unit •6.11 SD Card •6.12 USB memory •6.13 Machine Operation Panel Other mistakes were corrected.

Date of revision	Manual No.	Revision details
Mar. 2022	IB(NA)1501617-C	Contents were revised to correspond to Mitsubishi Electric CNC M800V/M80V Series software version A3. The following chapters were added. •1.2.5 19-type Display Unit (M800VW/M80VW Series, Windows-based Display Unit) •1.2.6 19-type Display Unit (M800VS/M80V Series) •1.2.9 Connecting an Image Input Expansion Unit (M800VS/M80V Series) •1.2.10 Connecting a Laser I/F Unit •1.2.11 Connecting a BiSS Encoder (M800VS/M80V Series) •1.4.5 Laser I/F Unit •6.8 Laser I/F Unit Due to adding of the chapters as above, the existing chapter number was changed. •1.4.6 Function Expansion Unit The following chapters were changed. •1.2 General Connection Diagram •1.2.1 M800VW Series, Windows-based Display Unit •1.2.2 M80VW Series, Windows-based Display Unit •1.2.3 M800VS Series •1.2.4 M80V Series •1.2.7 Connecting an Operation Panel I/O Unit (FCU8-DX834) (M800VS/M80V Series) •1.2.8 Connecting a Pulse-controlled Inverter (M80V Series) •2.2.2 List of Replacing Parts •4.5.1 Self Diagnosis Screen •6.3 Display Unit •6.5 Keyboard Unit •6.6 Operation Panel I/O Unit •6.9 Function Expansion Unit Other mistakes were corrected.

Global Service Network

AMERICA

MITSUBISHI ELECTRIC AUTOMATION INC. (AMERICA FA CENTER)
Central Region Service Center (Chicago)
500 CORPORATE WOODS PARKWAY, VERNON HILLS, ILLINOIS 60061, U.S.A.
TEL: +1-847-478-2500 / FAX: +1-847-478-2650
Minneapolis, MN Service Satellite
Detroit, MI Service Satellite
Grand Rapids, MI Service Satellite
Milwaukee, WI Service Satellite
Cleveland, OH Service Satellite
Indianapolis, IN Service Satellite
St. Louis, MO Service Satellite

South/East Region Service Center (Georgia)
1845 SATELLITE BOULEVARD STE. 450, DULUTH, GEORGIA 30097, U.S.A.
TEL +1-678-258-4529 / FAX +1-678-258-4519
Charleston, SC Service Satellite
Charlotte, NC Service Satellite
Raleigh, NC Service Satellite
Dallas, TX Service Satellite
Houston, TX Service Satellite
Hartford, CT Service Satellite
Knoxville, TN Service Satellite
Nashville, TN Service Satellite
Baltimore, MD Service Satellite
Pittsburg, PA Service Satellite
Tampa, FL Service Satellite
Syracuse, NY Service Satellite
Orlando, FL Service Satellite
Lafayette, LA Service Satellite
Philadelphia, PA Service Satellite

Western Region Service Center (California)
5900-B KATELLA AVE. - 5900-A KATELLA AVE. CYPRESS, CALIFORNIA 90630, U.S.A.
TEL: +1-714-699-2625 / FAX: +1-847-478-2650
San Jose, CA Service Satellite
Seattle, WA Service Satellite
Denver, CO Service Satellite

Canada Region Service Center (Toronto)
4299 14TH AVENUE MARKHAM, ONTARIO L3R OJ2, CANADA
TEL: +1-905-475-7728 / FAX: +1-905-475-7935
Edmonton, AB Service Satellite
Montreal, QC Service Satellite

Mexico Region Service Center (Queretaro)
Parque Tecnológico Innovación Querétaro, Lateral Carretera Estatal 431, Km 2+200, Lote 91 Modulos 1 y 2
Hacienda la Machorra, CP 76246, El Marqués, Querétaro, México
TEL: +52-442-153 6050
Monterrey, NL Service Satellite
Mexico City, DF Service Satellite

BRAZIL

MITSUBISHI ELECTRIC DO BRASIL COMÉRCIO E SERVIÇOS LTDA.
Votorantim Office
AV. GISELE CONSTANTINO,1578, PARQUE BELA VISTA, VOTORANTIM-SP, BRAZIL CEP:18.110-650
TEL: +55-15-3023-9000
Blumenau, Santa Catarina Office

EUROPE

MITSUBISHI ELECTRIC EUROPE B.V.
European Service Headquarters (Dusseldorf, GERMANY)
Mitsubishi-Electric-Platz 1 40882 RATINGEN, GERMANY
TEL: +49-2102-486-5000 / FAX: +49-2102-486-5910

South Germany Service Center (Stuttgart)
SCHELMENWASENSTRASSE 16-20, 70567 STUTTGART, GERMANY
TEL: + 49-711-770598-123 / FAX: +49-711-770598-141

France Service Center (Paris)
2 RUE DE L'UNION, 92565 RUEIL-MALMAISON CEDEX, FRANCE
TEL: +33-1-41-02-83-13 / FAX: +33-1-49-01-07-25

France Service Satellite (Lyon)
120, ALLEE JACQUES MONOD 69800 SAINT PRIEST FRANCE
TEL: +33-1-41-02-83-13 / FAX: +33-1-49-01-07-25

Italy Service Center (Milan)
CENTRO DIR. COLLEONI, PALAZZO SIRIO, VIALE COLLEONI 7, 20864 AGRATE BRIANZA (MB) ITALY
TEL: +39-039-6053-342 / FAX: +39-039-6053-206

Italy Service Satellite (Padova)
VIA G. SAVELLI, 24 - 35129 PADOVA, ITALY
TEL: +39-039-6053-342 / FAX: +39-039-6053-206

U.K. Service Center
TRAVELLERS LANE, HATFIELD, HERTFORDSHIRE, AL10 8XB, U.K.
TEL: +44-1707-288-780 / FAX: +44-1707-278 695

Spain Service Center
CTRA. RUBI, 76-80 8174 SAINT CUGAT DEL VALLES, BARCELONA, SPAIN
TEL: +34-935-65-2236 / FAX: +34-935-89-1579

Poland Service Center
UL.KRAKOWSKA 50, 32-083 BALICE, POLAND
TEL: +48-12-347-6500 / FAX: +48-12-630-4701

Hungary Service Center
BUDAÖRS OFFICE PARK, SZABADSÁG ÚT 117., 2040 BUDAÖRS, HUNGARY
TEL: +48-12-347-6500 / FAX: +48-12-630-4701

Turkey Service Center
MITSUBISHI ELECTRIC TURKEY ELEKTRİK ÜRÜNLERİ A.Ş
SERIFALI MAHALLESI KALE SOKAK. NO.41 34775
UMRANIYE, ISTANBUL, TURKEY
TEL: +90-216-969-2500 / FAX: +90-216-661-44-47

Czech Republic Service Center
AutoCont Control Systems s.r.o (Service Partner)
KAFKOVA 1853/3, 702 00 OSTRAVA 2, CZECH REPUBLIC
TEL: +420-59-5691-185 / FAX: +420-59-5691-199

Russia Service Center
MITSUBISHI ELECTRIC RUSSIA LLC
LETNIKOVSKAYA STREET 2, BLD.1, 5TH 115114 MOSCOW, RUSSIA
TEL: +7-495-721-2070 / FAX: +7-495-721-2071

Sweden Service Center
HAMMARBACKEN 14, P.O.BOX 750 SE-19127, SOLLENTUNA, SWEDEN
TEL: +46-8-6251200 / FAX: +46-8-6251014

Bulgaria Service Center
AKHNATON Ltd. (Service Partner)
4 ANDREJ LJAPCHEV BLVD. POB 21, BG-1756 SOFIA, BULGARIA
TEL: +359-2-8176009 / FAX: +359-2-9744061

Ukraine Service Center (Kiev)
CSC Automation Ltd. (Service Partner)
4 B, YEVHENA SVERSTYUKA STR., 02002 KIEV, UKRAINE
TEL: +380-44-494-3344 / FAX: +380-44-494-3366

Belarus Service Center
TECHNIKON Ltd. (Service Partner)
NEZAVISIMOSTI PR.177, 220125 MINSK, BELARUS
TEL: +375-17-393-1177 / FAX: +375-17-393-0081

South Africa Service Center
Adroit Technologies (Service Partner)
20 WATERFORD OFFICE PARK, WATERFORD DRIVE, CNR OF WITKOPPEN ROAD,
FOURWAYS JOHANNESBURG SOUTH AFRICA
TEL: +27-11-658-8100 / FAX: +27-11- 658-8101

ASEAN

MITSUBISHI ELECTRIC ASIA PTE. LTD. (ASEAN FA CENTER)
Singapore Service Center
307 ALEXANDRA ROAD #05-01/02 MITSUBISHI ELECTRIC BUILDING SINGAPORE 159943
TEL: +65-6473-2308 / FAX: +65-6476-7439

PHILIPPINES

MELCO FACTORY AUTOMATION PHILIPPINES INC.
Head Office
128 LOPEZ RIZAL STREET, BRGY., HIGHWAY HILLS, MANDALUYONG CITY , MM PHILIPPINES 1550
TEL: +63-2-8256-8042 / FAX: +632-8637-2294

Philippines Service Center
KM.23 WEST SERVICE ROAD SSH, CUPANG ,MUNTINLUPA CITY, PHILIPPINES
TEL: +63-2-8807-0420 / FAX: +63-2-8842-5202

VIETNAM

MITSUBISHI ELECTRIC VIETNAM CO., LTD.
Vietnam Ho Chi Minh Service Center
11TH & 12TH FLOOR, VIETTEL TOWER B, 285 CACH MANG THANG 8 STREET, WARD 12, DISTRICT 10,
HO CHI MINH CITY, VIETNAM
TEL: +84-28-3910 5945 / FAX: +84-28-3910 5947

Vietnam Hanoi Service Center
24TH FLOOR, HANDICO TOWER, PHAM HUNG ROAD, ME TRI HA, ME TRI WARD,
NAM TU LIEM DISTRICT, HA NOI CITY, VIETNAM
TEL: +84-24-3937-8075 / FAX: +84-24-3937-8076

INDONESIA

PT. MITSUBISHI ELECTRIC INDONESIA
Indonesia Service Center (Cikarang)
JL. KENARI RAYA BLOK G2-07A, DELTA SILICON 5, LIPPO CIKARANG - BEKASI 17550, INDONESIA
TEL: +62-21-2961-7797 / FAX: +62-21-2961-7794

MALAYSIA

MITSUBISHI ELECTRIC SALES MALAYSIA SDN. BHD.
Malaysia Service Center (Kuala Lumpur Service Center)
LOT 11, JALAN 219, P.O BOX 1036, 46860 PETALING JAYA, SELANGOR DARUL EHSAN, MALAYSIA
TEL: +60-3-7626-5032 / FAX: +60-3-7960-2629
Johor Bahru Service Satellite
Pulau Pinang Service Satellite

THAILAND

MITSUBISHI ELECTRIC FACTORY AUTOMATION (THAILAND) CO., LTD.
Thailand Service Center (Bangkok)
101, TRUE DIGITAL PARK OFFICE, 5TH FLOOR, SUKHUMVIT ROAD, BANGCHAK, PHRAKHANONG,
BANGKOK, 10260 THAILAND
TEL: +66-2-092-8600 / FAX: +66-2-043-1231-33

INDIA

MITSUBISHI ELECTRIC INDIA PVT., LTD.
CNC Technical Center (Bangalore)
PLOT NO. 56, 4TH MAIN ROAD, PEENYA PHASE 3,
PEENYA INDUSTRIAL AREA, BANGALORE 560058, KARNATAKA, INDIA
TEL : +91-80-4655-2121 / FAX : +91-80-4655-2147
Chennai Service Satellite
Coimbatore Service Satellite
Hyderabad Service Satellite

North India Service Center (Gurgaon)
PLOT 517, GROUND FLOOR, UDYOG VIHAR PHASE-III, GURUGRAM 122008, HARYANA, INDIA
TEL : +91-124-463-0300 / FAX : +91-124-463-0399
Ludhiana Service Satellite
Panthnagar Service Satellite
Delhi Service Satellite
Jamshedpur Service Satellite
Manesar Service Satellite

West India Service Center (Pune)
ICC-Devi GAURAV TECHNOLOGY PARK, UNIT NO.402, FOURTH FLOOR, NORTH WING,
SURVEY NUMBER 191-192 (P), NEXT to INDIAN CARD CLOTHING COMPANY Ltd,
OPP. VALLABH NAGAR, PIMPRI, PUNE- 411 018, MAHARASHTRA, INDIA
TEL : +91-20-6819 2274 / FAX : +91-20-4624 2100
Kolhapur Service Satellite
Aurangabad Service Satellite
Mumbai Service Satellite

West India Service Center (Ahmedabad)
204-209, 2ND FLOOR, 31FIVE, CORPORATE ROAD PRAHLADNAGAR,
AHMEDABAD -380015, GUJARAT, INDIA
TEL : + 91-79-6777 7888
Rajkot Service Satellite

CHINA

MITSUBISHI ELECTRIC AUTOMATION (CHINA) LTD. (CHINA FA CENTER)
CNC Call Center
TEL: +86-400-921-5130

Shanghai Service Center
1-3,5-10,18-23/F, NO.1386 HONG QIAO ROAD, CHANG NING QU,
SHANGHAI 200336, CHINA
TEL: +86-21-2322-3030 / FAX: +86-21-2322-3000*8422
Qingdao Service Center
Suzhou Service Center
Wuhan Service Center
Ningbo Service Center
Hefei Service Center
Beijing Service Center
Tianjin Service Center
Xian Service Center
Dalian Service Center
Chengdu Service Center

Shenzhen Service Center
LEVEL8, GALAXY WORLD TOWER B, 1 YABAO ROAD, LONGGANG DISTRICT,
SHENZHEN 518129, CHINA
TEL: +86-755-2399-8272 / FAX: +86-755-8229-3686
Dongguan Service Center
Xiamen Service Center

KOREA

MITSUBISHI ELECTRIC AUTOMATION KOREA CO., LTD. (KOREA FA CENTER)
Korea Service Center
8F GANGSEO HANGANG XI-TOWER A, 401 YANGCHEON-RO, GANGSEO-GU,
SEOUL 07528 KOREA
TEL: +82-2-3660-9631 / FAX: +82-2-3664-8668
Korea Daegu Service Satellite

TAIWAN

MITSUBISHI ELECTRIC TAIWAN CO., LTD. (TAIWAN FA CENTER)
Taiwan Taichung Service Center
NO. 8-1, GONGYEQU 16th RD., XITUN DIST., TAICHUNG CITY 40768 , TAIWAN
TEL: +886-4-2359-0688 / FAX: +886-4-2359-0689

Taiwan Taipei Service Center
11F, NO.88, SEC.6, ZHONGSHAN N. RD., SHILIN DIST., TAIPEI CITY 11155, TAIWAN
TEL: +886-2-2833-5430 / FAX: +886-2-2833-5433

Taiwan Tainan Service Center
11F.-1, NO.30, ZHONGZHENG S. RD., YONGKANG DIST., TAINAN CITY 71067, TAIWAN
TEL: +886-6-252-5030 / FAX: +886-6-252-5031

OCEANIA

MITSUBISHI ELECTRIC AUSTRALIA PTY. LTD.
Oceania Service Center
348 VICTORIA ROAD, RYDALMERE, N.S.W. 2116 AUSTRALIA
TEL: +61-2-9684-7269/ FAX: +61-2-9684-7245

Notice

Every effort has been made to keep up with software and hardware revisions in the contents described in this manual. However, please understand that in some unavoidable cases simultaneous revision is not possible. Please contact your Mitsubishi Electric dealer with any questions or comments regarding the use of this product.

Duplication Prohibited

This manual may not be reproduced in any form, in part or in whole, without written permission from Mitsubishi Electric Corporation.

COPYRIGHT 2021-2022 MITSUBISHI ELECTRIC CORPORATION ALL RIGHTS RESERVED

MITSUBISHI ELECTRIC CORPORATION
HEAD OFFICE : TOKYO BLDG.,2-7-3 MARUNOUCHI,CHIYODA-KU,TOKYO 100-8310,JAPAN

MODEL	M800V/M80V Series
MODEL CODE	100-748
Manual No.	IB-1501617

IB(NA)1501617(ENG)-C(2203)MEE
Made in JAPAN

Specifications are subject to change without notice.