Electronic Multi-Measuring Instrument

Programming Manual (CC-Link)

For ver.1 remote device station

Model

ME96NSR-MB or ME96NSR with Optional Plug-in Module: ME-0040C-NS96
ME96SSH-MB or ME96SSR-MB with Optional Plug-in Module: ME-0040C-SS96
ME96SSHA-MB or ME96SSRA-MB with Optional Plug-in Module: ME-0040C-SS96
ME96SSHB-MB or ME96SSRB-MB with Optional Plug-in Module: ME-0040C-SS96

LEN080334E

CONTENTS

1. General Description

This manual describes the programming methods that should be created by the user for monitoring measurement value of the Electronic Multi-Measuring Instrument (called ME96 from here on) with the Control & Communication Link (abbreviated as CC-Link from here on).
In programming, read the following related manuals in addition to this manual.

Table 1.1 Related Manuals

Manual Name	Manual No.
CC-Link System Master/Local Module User's Manual type QJ61BT11	SH-080016 (13JL91)
CC-Link System Master/Local Module User's Manual type QJ61BT11N	SH-080394E (13JR64)
MELSEC-L CC-Link System Master/Local Module User's Manual	SH-080895ENG (13JZ41)
FX2N-16CCL-M USER'S MANUAL	JY992D93101 (09R710)
FX3U-16CCL-M USER'S MANUAL	JY997D43601 (09R724)
User's Manual for ME96	Supplied with product or download.

NOTICE

When using ME96, Optional Plug-in Module "ME-0040C-NS96" or "ME-0040C-SS96" is necessary. CC-Link communication is not available without the optional plug-in module. In this manual, "ME96NSR", "ME96SSH-MB", "ME96SSR-MB", "ME96SSHA-MB", "ME96SSRA-MB", "ME96SSHB-MB" or "ME96SSRB-MB" means the main device of ME96 with the optional plug-in module.

POINT

ME96SSH-MB/ME96SSR-MB/ME96SSHA-MB/ME96SSRA-MB/ME96SSHB-MB/ME96SSRB-MB must be handled after setting of the remote device station version. Set the remote device station version with the "Setting Menu 2" of the ME96SSH-MB/ME96SSR-MB/ME96SSHA-MB/ME96SSRA-MB/ME96SSHB-MB/ME96SSRB-MB.

Use the following as a guideline in setting the remote device station version and set the version at ME96.

Mode select setting	Guideline for selection
Ver.1 remote device station (Ver.1 compatible slave station)	Select this when utilizing the conventional program, because of compatibility with ME96NSR.
Ver.2 remote device station (Ver.2 compatible slave station)	Select this when configuring a new system or the being newly added to the existing system in combination with the applicable master module.

This programming manual is for ver.1 remote device station.
For use in the ver.2 remote device station (Ver.2 compatible slave station), refer to the following manual.
・Electronic Multi-Measuring Instrument Programing Manual (CC-Link)(For ver.2 remote device station)
..... LEN130391

2. Specification

ME96 specification is shown in Table 2.1.

Table 2.1 CC-Link Specification

Item	Specification
CC-Link station type	Remote device station (ver.1 remote device station)
Number of occupied stations	1 station
Maximum number of stations per master station	42 stations (In case of connecting only remote device station occupied by 1 station.)
Transmission speed	156kbps/625kbps/2.5Mbps/5Mbps/10Mbps
Remote I/O (RX, RY)	32 points each
Remote register (RWw, RWr)	4 points each

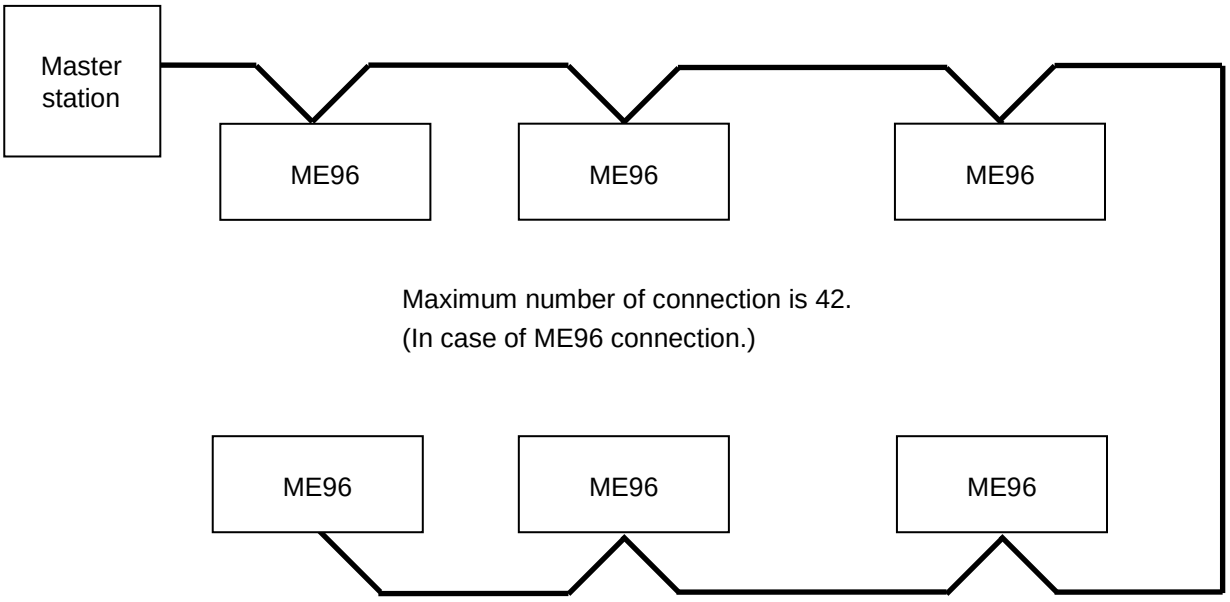

System Configration (CC-Link)

3. Configuration Conditions of CC-Link System

3.1 Remote net ver.1 mode

A total of 64 remote I/O stations, remote device stations, local stations, standby master stations, or intelligent device stations can be connected to a single master station.
However, the following conditions must all be satisfied.

Condition 1	$\{(1 \times a)+(2 \times b)+(3 \times c)+(4 \times d)\} \leqq 64$	a: Number of modules occupying 1 station (ME96 is applied) b: Number of modules occupying 2 stations c: Number of modules occupying 3 stations d: Number of modules occupying 4 stations
Condition 2	$\{(16 \times A) + (54 \times B) + (88 \times C)\} \leqq 2304$	A: Number of remote I/O stations $\leqq$ 64 B: Number of remote device stations (ME96 is applied) $\leqq$ 42 C: Number of local stations, standby master stations and intelligent device stations $\leqq$ 26

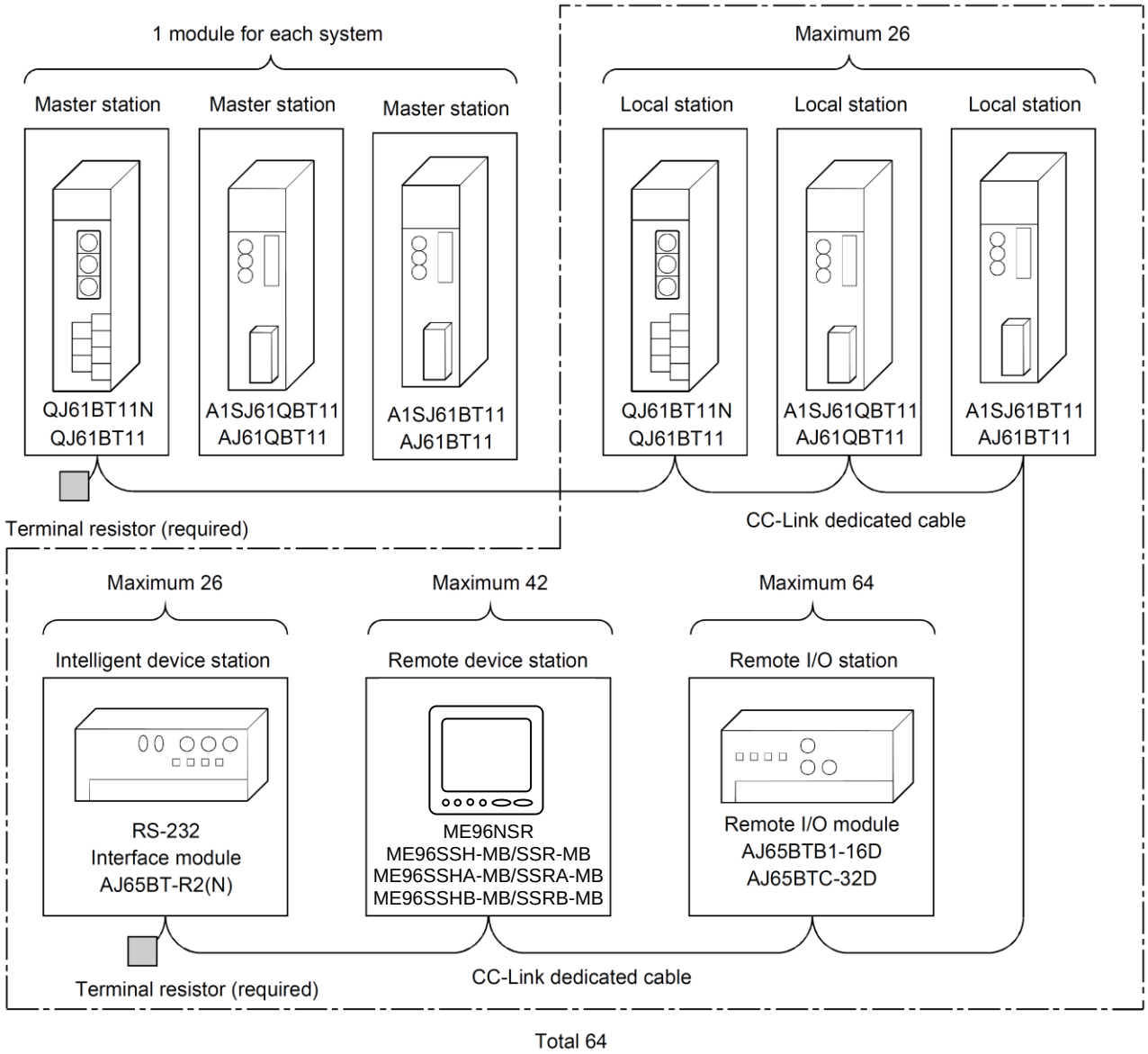

3.2 Remote net ver.2 mode

A total of 64 remote I/O stations, remote device stations, local stations, standby master stations, or intelligent device stations can be connected to a single master station.
However, the following conditions must all be satisfied.

<table>
<tr><td>Condition 1</td><td>{(a＋a2＋a4＋a8)
＋(b＋b2＋b4＋b8)×2
＋(c＋c2＋c4＋c8)×3
＋(d＋d2＋d4＋d8)×4}≦64</td><td rowspan="3">a: The total number of ver.1 compatible slave stations that occupy 1 station, and ver.2 compatible slave stations that occupy 1 station which are set to “Single”.
(ME96 is applied)
b: The total number of ver.1 compatible slave stations that occupy 2 stations, and ver.2 compatible slave stations that occupy 2 stations which are set to “Single”.
c: The total number of ver.1 compatible slave stations that occupy 3 stations, and ver.2 compatible slave stations that occupy 3 stations which are set to “Single”.
d: The total number of ver.1 compatible slave stations that occupy 4 stations, and ver.2 compatible slave stations that occupy 4 stations which are set to “Single”.
a2: The number of ver.2 compatible stations that occupy 1 station which are set to “Double”.
b2: The number of ver.2 compatible stations that occupy 2 stations which are set to “Double”.
c2: The number of ver.2 compatible stations that occupy 3 stations which are set to “Double”.
d2: The number of ver.2 compatible stations that occupy 4 stations which are set to “Double”.
a4: The number of ver.2 compatible stations that occupy 1 station which are set to “Quadruple”.
b4: The number of ver.2 compatible stations that occupy 2 stations which are set to “Quadruple”.
c4: The number of ver.2 compatible stations that occupy 3 stations which are set to “Quadruple”.
d4: The number of ver.2 compatible stations that occupy 4 stations which are set to “Quadruple”.
a8: The number of ver.2 compatible stations that occupy 1 station which are set to “Octuple”.
b8: The number of ver.2 compatible stations that occupy 2 stations which are set to “Octuple”.
c8: The number of ver.2 compatible stations that occupy 3 stations which are set to “Octuple”.
d8: The number of ver.2 compatible stations that occupy 4 stations which are set to “Octuple”.</td></tr>
<tr><td>Condition 2</td><td>[{(a×32)＋(a2×32)＋(a4×64)＋(a8×128)}
＋{(b×64)＋(b2×96)＋(b4×192)＋(b8×384)}
＋{(c×96)＋(c2×160)＋(c4×320)＋(c8×640)}
＋{(d×128)＋(d2×224)＋(d4×448)＋(d8×896)}]
≦8192</td></tr>
<tr><td>Condition 3</td><td>[{(a×4)＋(a2×8)＋(a4×16)＋(a8×32)}
＋{(b×8)＋(b2×16)＋(b4×32)＋(b8×64)}
＋{(c×12)＋(c2×24)＋(c4×48)＋(c8×96)}
＋{(d×16)＋(d2×32)＋(d4×64)＋(d8×128)}]
≦2048</td></tr>
<tr><td>Condition 4</td><td>{(16×A) + (54×B) + (88×C)} ≦ 2304</td><td>A: Number of remote I/O stations ≦ 64
B: Number of remote device stations (ME96 is applied) ≦ 42
C: Number of local stations, standby master stations and intelligent device stations ≦ 26</td></tr>
</table>

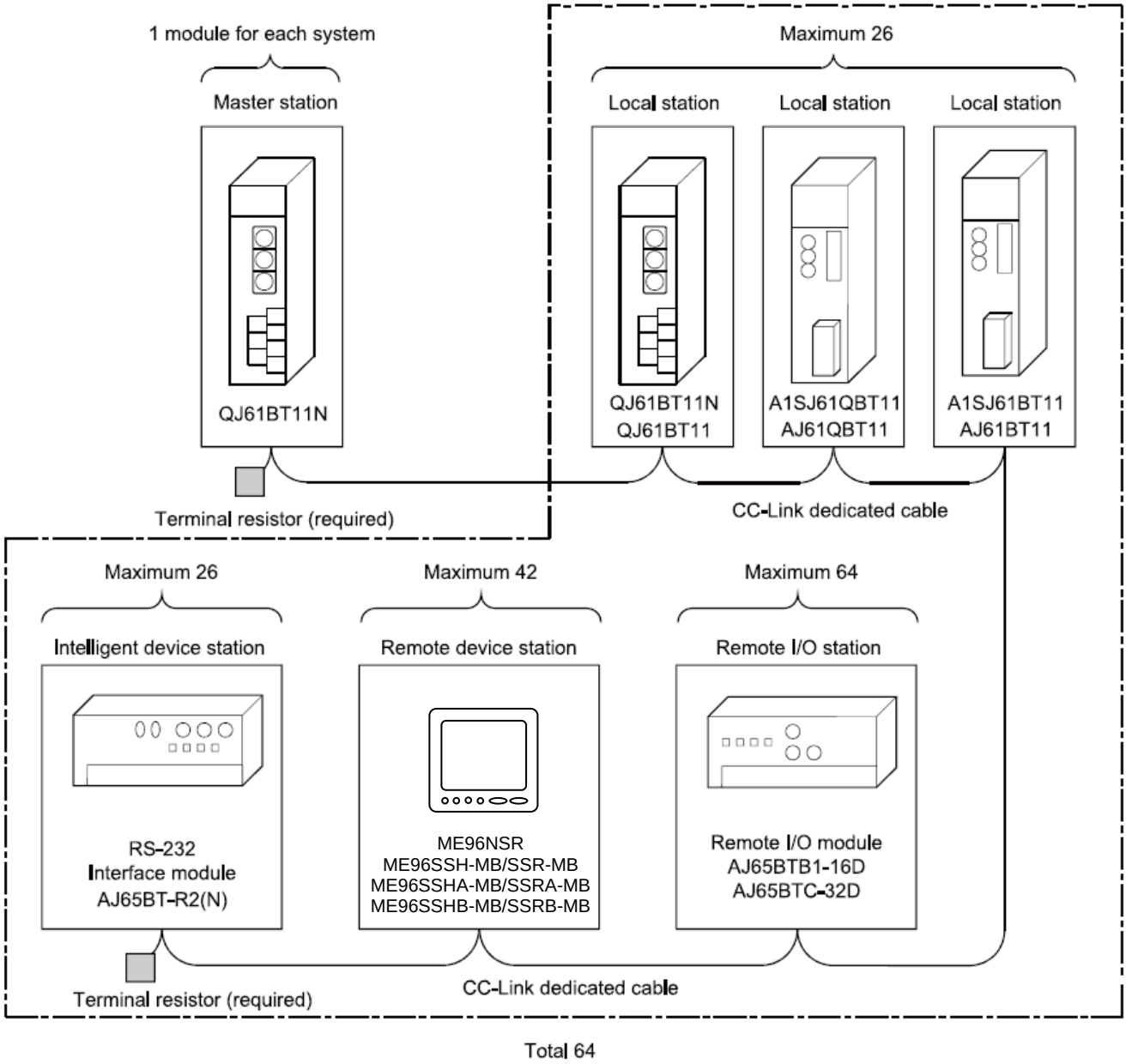
1 module for each system
Master station
QJ61BT11N
Terminal resistor (required)
Maximum 26
Local station
Local station
Local station
QJ61BT11N
QJ61BT11
A1SJ61QBT11
AJ61QBT11
A1SJ61BT11
AJ61BT11
CC-Link dedicated cable
Maximum 26
Intelligent device station
RS-232
Interface module
AJ65BT-R2(N)
Maximum 42
Remote device station
ME96NSR
ME96SSH-MB/SSR-MB
ME96SSHA-MB/SSRA-MB
ME96SSHB-MB/SSRB-MB
Maximum 64
Remote I/O station
Remote I/O module
AJ65BTB1-16D
AJ65BTC-32D
Terminal resistor (required)
CC-Link dedicated cable
Total 64

4. Programming

4.1 Programming Procedure

Create a program which executes the “Monitoring of the measurement values” by following the procedure below:

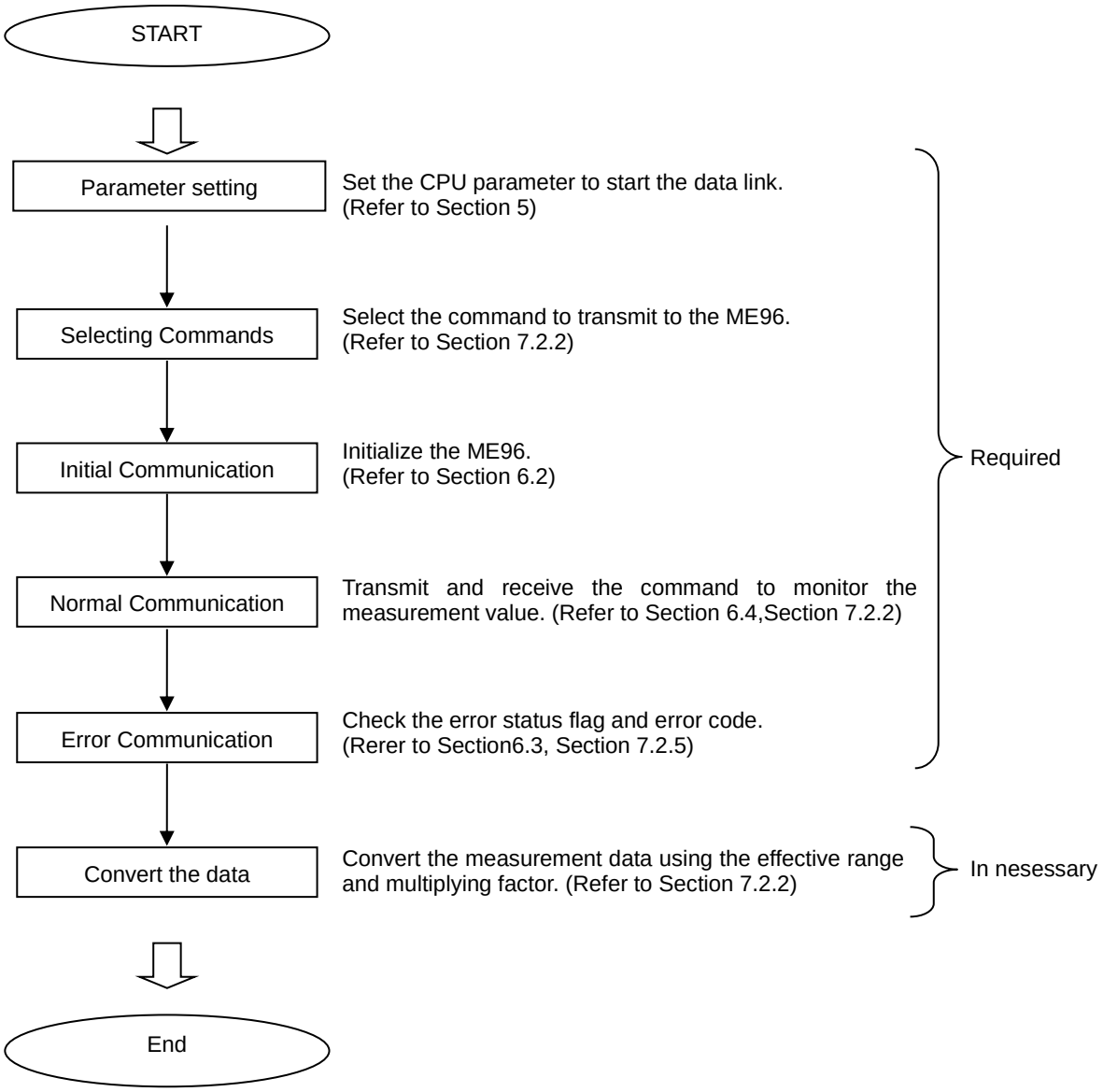

5. Parameter Settings

5.1 Procedure from Parameter Settings to Data Link Startup

The following explains the procedure from setting the parameters to stating the data link.

5.1.1 CPU Parameter Area and Master Module Parameter Memory

(1) CPU Parameter Area

This area is used to set the basic values for controlling the programmable controller system and the network parameters that control the CC-Link system.

(2) Master Station Parameter Memory

This area stores the network parameters for the CC-Link system.
When the module is powered OFF or the programmable controller CPU is reset, the network parameters are erased.

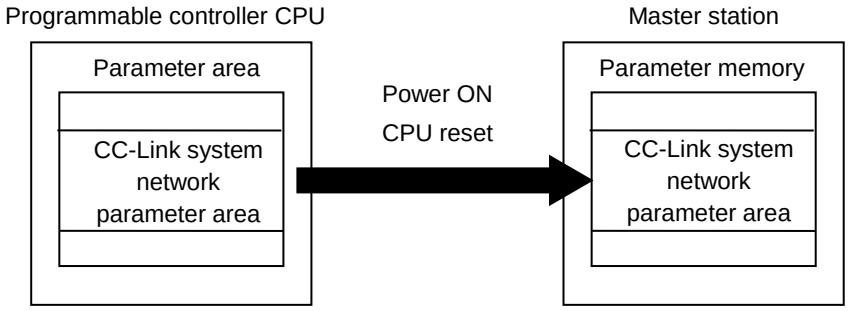

5.1.2 Procedure for Parameter Settings to Data Link Startup with GX Developer

Follow the procedure below for parameter settings to data link startup:

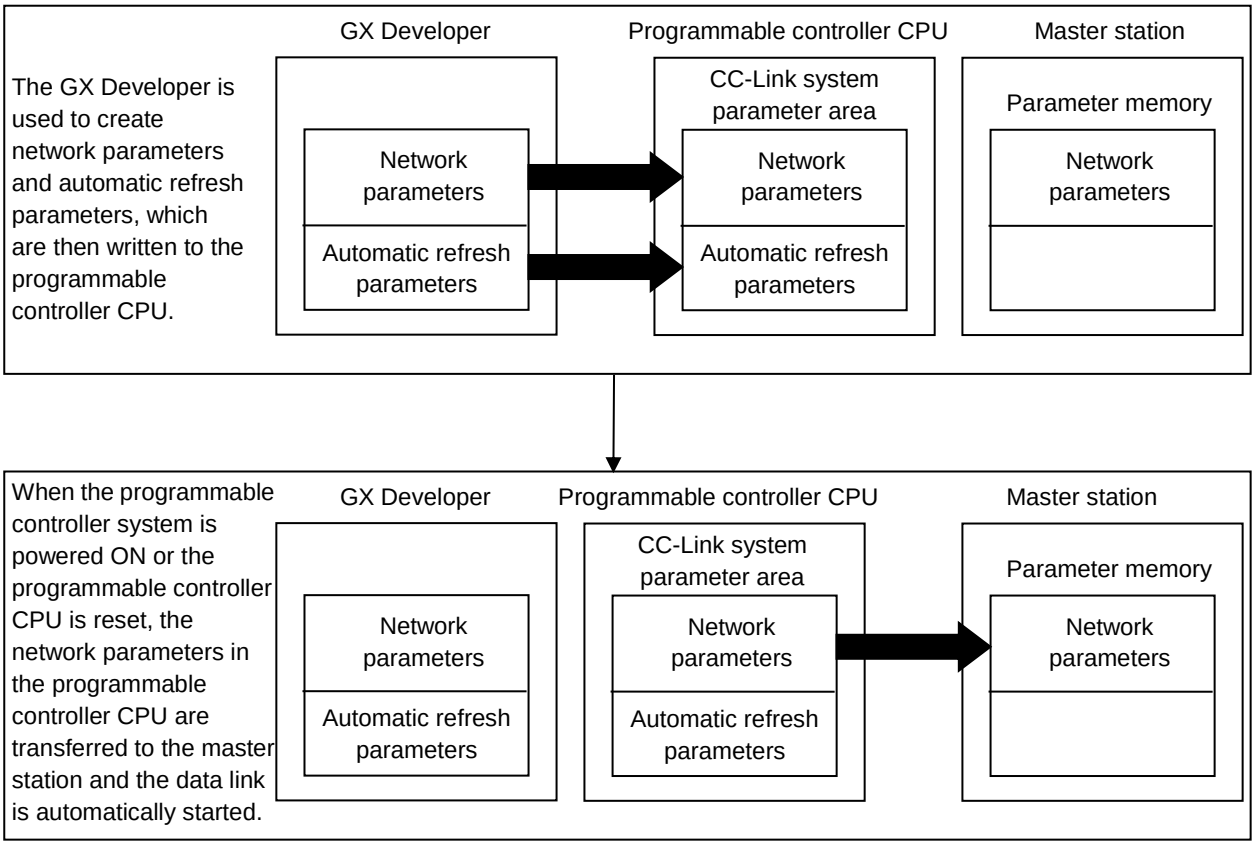

5.2 Example of Parameter Settings with GX Developer

This section explains the parameter settings using the GX Developer. For more details on the GX Developer operation, refer to the GX Developer Operating Manual. The explanations in this section are based on the following example of the system configuration.

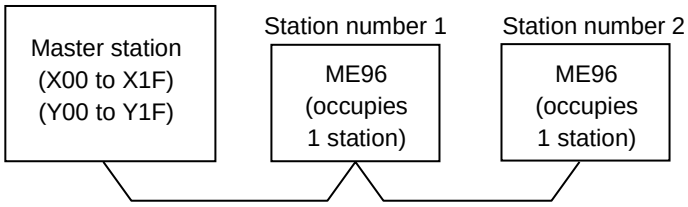

5.2.1 Master Station Network Parameter Settings

1) Double-click on the “Network param”.
2) Double-click on the “CC-Link” on the “Network parameter” screen.
3) Set the parameters as required.

The following describes an example of the parameter settings.

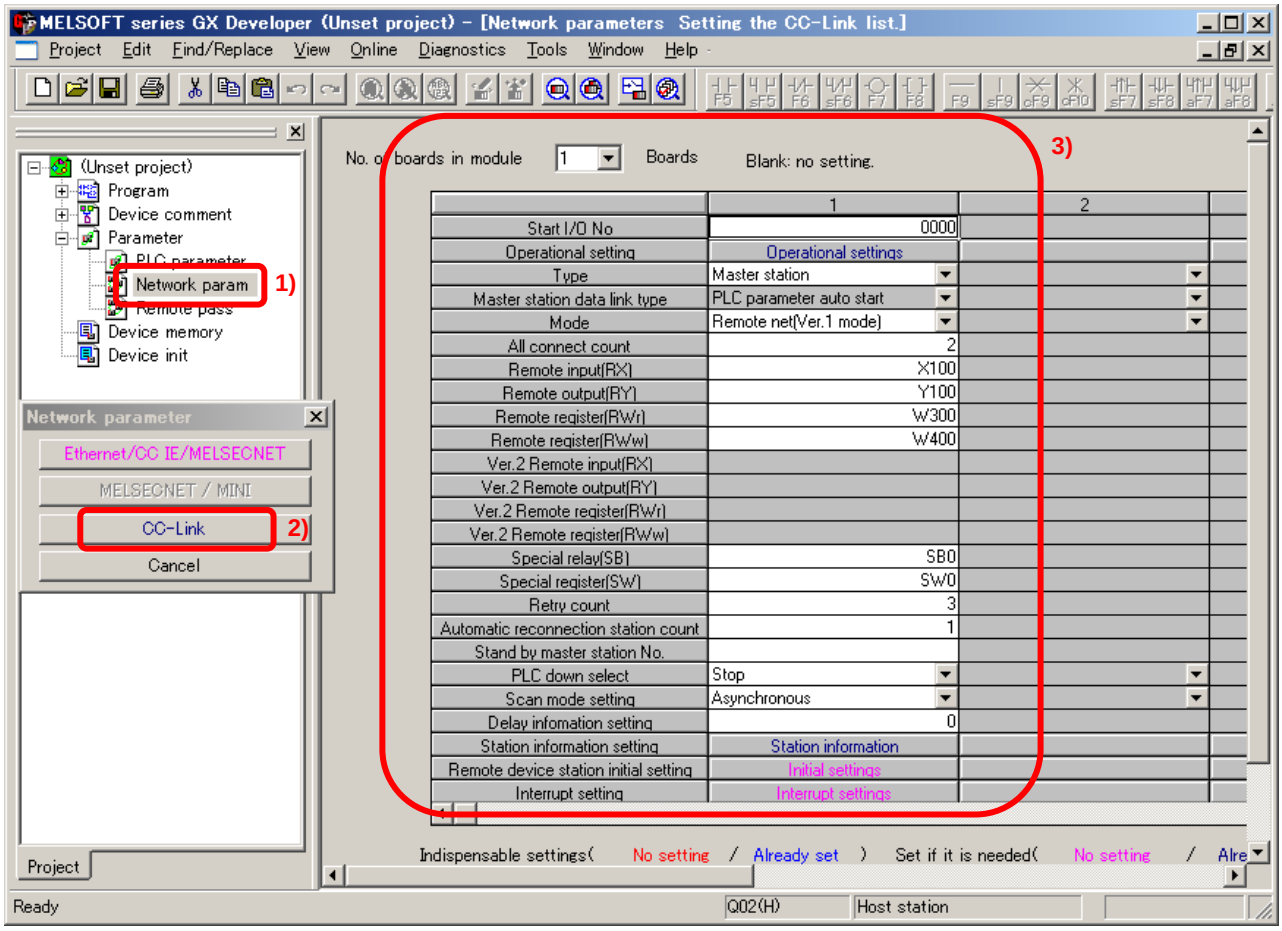

Setting Item	Description	Example for settings	Remarks
No.of boards in module	Set the "No. of boards in module" for which the network parameters are to be set.	1	
Start I/O No	Set the "Start I/O No." for the master station.	0000	
Operational settings	Set the following: ・Parameter name ・Data link err station setting ・Case of CPU Stop setting ・Block data assurance per station	Refer to next page.	Even if the Parameter name is not set, this will not affect the operation of the CC-Link system
Type	Set the station type.	Master station	
Mode	Set the CC-Link mode.	Remote net (Ver.1 mode)	"Remote net ver.2 mode "and "Remote net additional mode" can be also used in case of the QJ61BT11N.
All connect count	Set the total number of connected stations in the CC-Link system including reserved stations.	2 (modules)	
Remote input (RX)	Set the remote input (RX) refresh device.	X100	Device name - Select from X, M, L, B, D, W, R or ZR. Device number - Within the range of the device points that the CPU has.
Remote output (RY)	Set the remote output (RY) refresh device.	Y100	Device name - Select from Y, M, L, B, T, C, ST, D, W, R or ZR. Device number - Within the range of the device points that the CPU has.
Remote register (RWr)	Set the remote register (RWr) refresh device.	W300	Device name - Select from M, L, B, D, W, R, or ZR. Device number - Within the range of the device points that the CPU has.
Remote register (RWw)	Set the remote register (RWw) refresh device.	W400	Device name - Select from M, L, B, T, C, ST, D, W, R, or ZR. Device number - Within the range of the device points that the CPU has.
Special relay (SB)	Set the link special relay (SB) refresh device.	SB0	Device name - Select from M, L, B, D, W, R, SB or ZR. Device number - Within the range of the device points that the CPU has.
Special register (SW)	Set the link special register (SW) refresh device.	SW0	Device name - Select from M, L, B, D, W, R, SW or ZR. Device number - Within the range of the device points that the CPU has.
Retry count	Set the number of retries for "Retry count", when a communication error occurs.	3	
Automatic reconnection station count	Set the number of modules that can return to system operation by a single link scan.	1	
Standby master station No.	Set the station number for the standby master station	Blank	Blank: No standby master station specified.
PLC down select	Set the data link status for "PLC down select", when a master station programmable controller CPU error occurs.	Stop	
Scan mode setting	Set whether the link scan for the sequence scan is synchronous or asynchronous.	Asynchronous	
Delay information setting	Set for the link scan delay time.	0	
Station information settings	Set the station data.	Refer to the next page.	

POINT
(1) For the automatic refresh parameter setting, set the start device only. Devices are automatically assigned until the last station number including reserved stations and occupied stations. In the example of the system configuration in this section, the last station number is "2". Therefore, total of remote I/O points is 64 points (32 x 2 = 64) and total of remote register points is 8 points (4 x 2 = 8). If refresh device of remote input (RX) is set to "X100" and that of remote register (RWr) is set to "W300", the end devices will be "X13F" and "W307" respectively. (2) When setting X, Y, B, W, SB and SW as refresh devices, make setting so that they do not overlap with the device numbers used on the other networks, etc.

《Example for Operational settings》

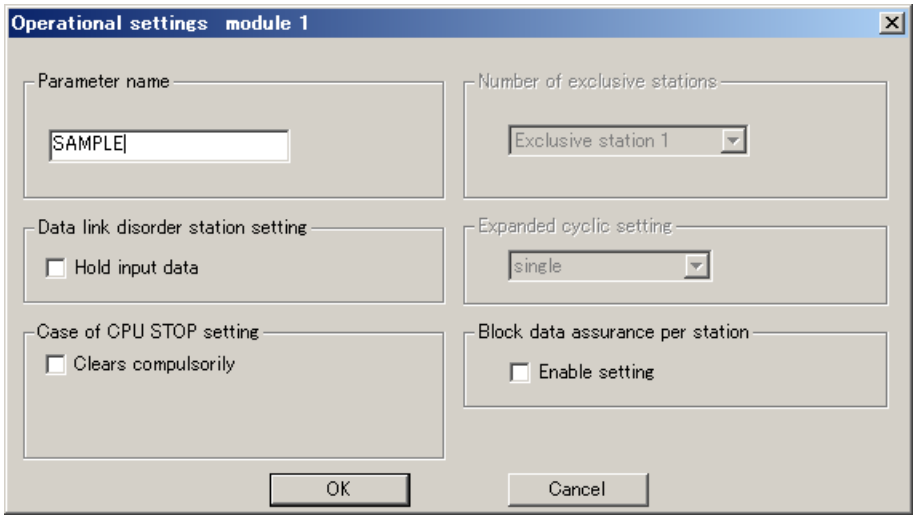

Setting Item	Description	Example for settings	Remarks
Parameter name	Set the Parameter name.	“SAMPLE”	Even if the Parameter name is not set, this will not affect the operation of the CC-Link system
Data link disorder station setting	Set the input status for the data link error station.	Clear ("Hold input data" not checked)	
Case of CPU Stop setting	Set the slave station refresh/compulsory clear setting at programmable controller CPU STOP.	Refresh ("Clears compulsorily " not checked)	
Block data assurance per station	Set the block guarantee of cyclic data per station.	Disable ("Enable setting" not checked)	

《Example for Station information settings》

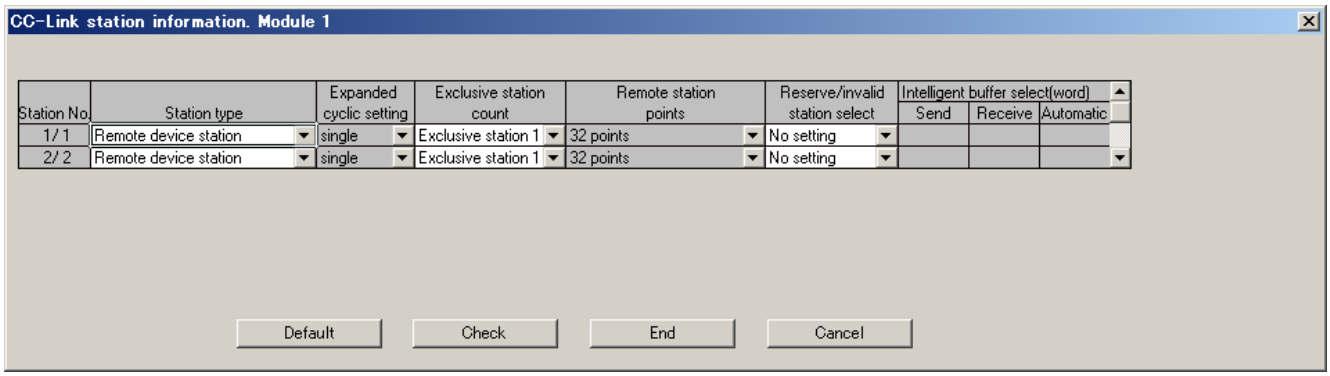

Setting Item	Description	Example for settings	Remarks
Station type	Set the station data.	Remote device station	Set the “remote device station” in case of the ME96. (If setting of “Mode” is remote net (Ver.2 mode, Set the “Ver.1 Remote device station”.)
Number of occupied stations *		Occupies 1 station	Set the “Occupies 1 station” in case of the ME96.
Remote station points		32 points [when occupies 1 station]	Cannot be changed.
Reserved/invalid station select		No setting	

* "Number of exclusive stations" on the screen is described as "Number of occupied stations" in this manual.
"Exclusive station 1" on the screen is described as "Occupies 1 station" in this manual

6. Communication Between the Master Station and ME96

6.1 Communication Guideline

There are three communication statuses (Initial Communication, Normal Communication, and Error Communication) between the Master station and ME96.

The following can be performed at normal communication.

- Monitoring of the measurement values such as the current, voltage and energy, etc.
- Monitoring of the bit data of the alarm state and the digital input state.
- Setting the set data of the time constant for current demand.

ME96 has a special-purpose command for each measurement items and each setting items. It becomes possible to monitor measurement value or to set the setting value by writing the command into the remote register RWw of the master station.

Overview of the Command Communication to ME96

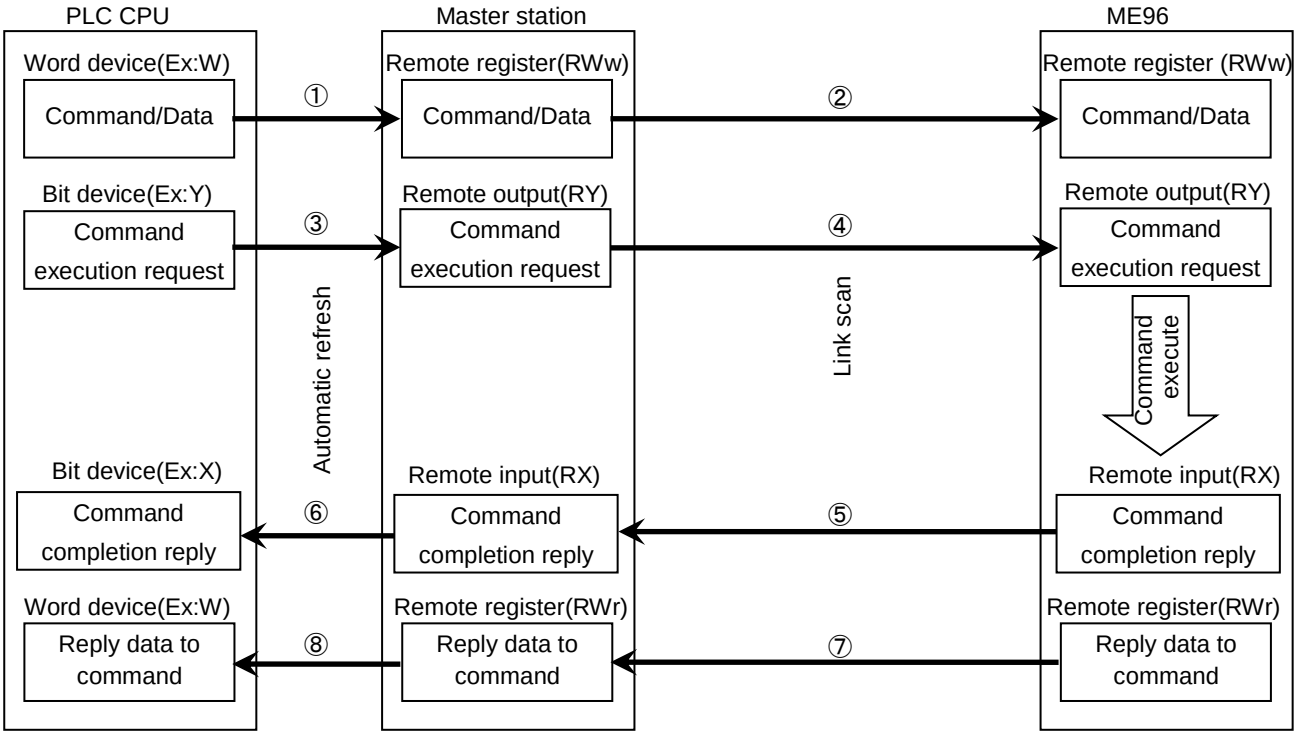

① By automatic refresh, command and data stored in the word device of PLC CPU are stored in the "remote register RWw" of the master station.

② By link scan, command and data stored in the "remote register RWw" of the master station are sent to ME96, and is stored in the "remote register RWw" of the ME96.

③ By automatic refresh, command execution request stored in the bit device of PLC CPU is stored in the "remote output RY" of the master station.

④ By link scan, command execution request stored in the "remote output RY" of the master station is sent to ME96, and is stored in the "remote output RY" of the ME96. And then ME96 executes the command and data.

⑤ By link scan, command completion reply stored in the "remote input RX" of the ME96 is sent to the master station, and is stored in the "remote input RX" of the master station.

⑥ By automatic refresh, command completion reply stored in the "remote input RX" of the master station is stored in the bit device of the PLC CPU.

⑦ By link scan, reply data to command stored in the "remote register RWr" of the ME96 is sent to the master station, and is stored in the "remote register RWr" of the master station.

⑧ By automatic refresh, reply data to command stored in the "remote register RWr" of the master station is stored in the word device of the PLC CPU.

6.2 Initial Communication

Initial communication is performed at the beginning after the power supply is turned on or hardware is reset. Refer to section 7.1 about the remote input RX and the remote output RY.

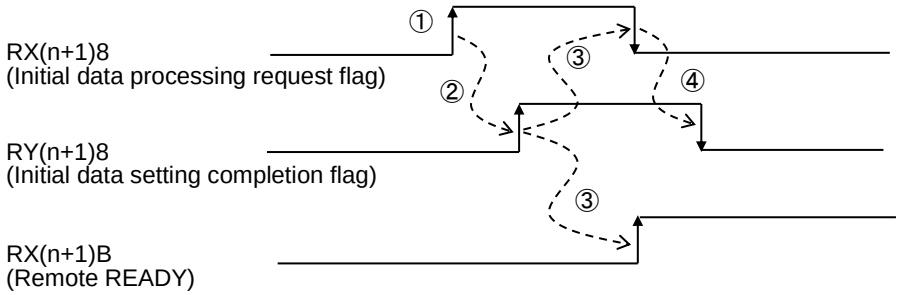

①After the power supply is turned on, or hardware is reset, the initial data processing request flag is turned on by ME96.

②After the initial data processing request flag is turned on, turn on the initial data setting completion flag.

③After the initial data setting completion flag is turned on, the initial data processing request flag is turned off and the remote READY is turned on.

④After the initial data processing request flag is turned off, turned off the initial data setting completion flag.

6.3 Error Communication

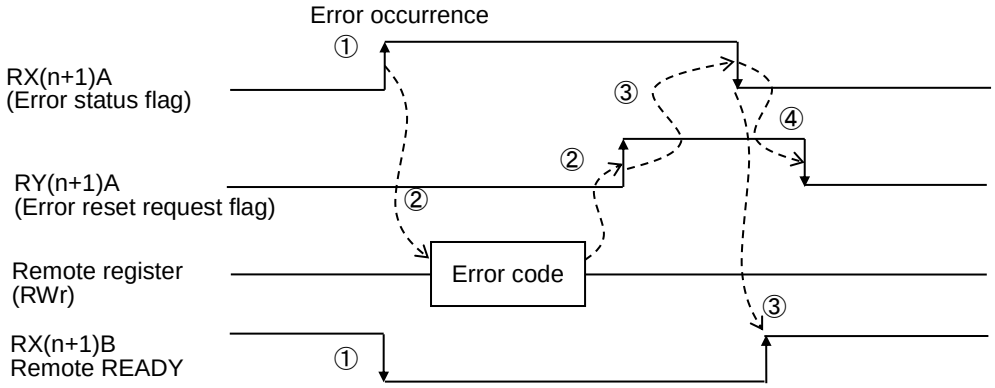

①When an error occurs in ME96, error status flag is turned on and the remote READY is turned off.

②When the error status flag is turned on, read the error code from the remote register RWr. Eliminate the cause of the error while referring to the red error code. When resuming communication with ME96, turn on the error reset request flag.

③After the error reset request flag is turned on, the error status flag is turned off. Also, the remote READY is turned on.

④After the error status flag is turned off, turn off the error reset request flag.

Note: Refer to “7.2.5 About error occurrence” for error code.

6.4 Normal Communication

After initial data processing is complete, the normally communication is performed to monitor the measurement values and to set the parameters.

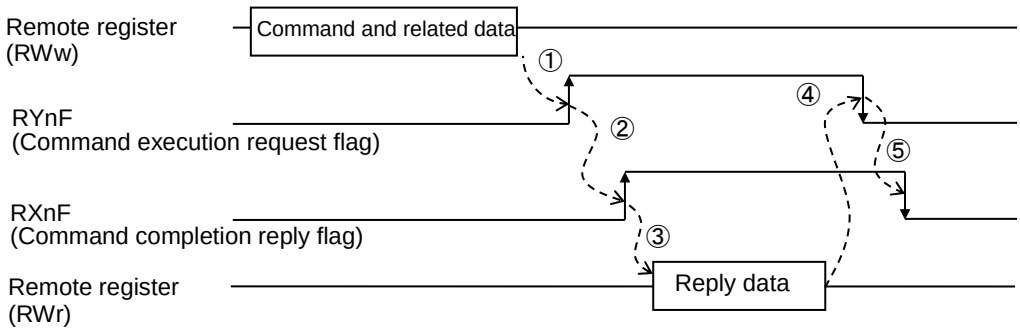

①After writing the command and related data into the remote register RWw, turn on the command execution request flag.

②After receiving the reply data corresponding to the command, the command completion reply flag turned on.

③After the command completion reply flag is turned on, read the reply data from the remote register RWw.

④After reading the reply data, cancel the command execution request by turning off the command execution request flag.

⑤After the command execution request flag is turned off, the command completion reply flag is turned off.

Note: When sending commands successively, repeat ① to ⑤ above.
The command can be sent only when the remote READY is ON.

7. Remote I/O and Remote Register

7.1 Remote Input RX, Remote Output RY

The remote input RX and remote output RY are used to communicate for bit data between the master station and ME96.

7.1.1 Remote input RX

The allocation of the remote input RX of ME96 is shown in the table below.

Device No.	Signal name	ME96NSR ME96SSR	ME96SSH ME96SSHA ME96SSRA ME96SSHB ME96SSRB	Description		Note
				OFF(0)	ON(1)	
RXn0	Digital Input 1 (DI1)	O	O	OFF	ON	
RXn1	Digital Input 2 (DI2)	O	O	OFF	ON	
RXn2	Digital Input 3 (DI3)	O	O	OFF	ON	
RXn3	Digital Input 4 (DI4)	O	O	OFF	ON	
RXn4	Reserved	–	–	–	–	
RXn5	Alarm (Total)	O	O	Non-Alarm state	Alarm state	
RXn6	Alarm of Current Demand	O	O	Non-Alarm state	Alarm state	
RXn7	Alarm of Rolling Demand	–	O	Non-Alarm state	Alarm state	*3
RXn8	Alarm of Voltage	O	O	Non-Alarm state	Alarm state	
RXn9	Alarm of Current	O	O	Non-Alarm state	Alarm state	
RXnA	Alarm of Active power	O	O	Non-Alarm state	Alarm state	
RXnB	Alarm of Reactive power	O	O	Non-Alarm state	Alarm state	
RXnC	Alarm of Frequency	O	O	Non-Alarm state	Alarm state	
RXnD	Alarm of Power factor	O	O	Non-Alarm state	Alarm state	
RXnE	Alarm of T.H.D (Voltage)	O	O	Non-Alarm state	Alarm state	
RXnF	Command completion reply flag	O	O	No receiving of reply date	Receiving of reply data	*1, *2
RX(n+1)0	Reserved	–	–	–	–	
RX(n+1)1	Reserved	–	–	–	–	
RX(n+1)2	Reserved	–	–	–	–	
RX(n+1)3	Reserved	–	–	–	–	
RX(n+1)4	Reserved	–	–	–	–	
RX(n+1)5	Reserved	–	–	–	–	
RX(n+1)6	Reserved	–	–	–	–	
RX(n+1)7	Reserved	–	–	–	–	
RX(n+1)8	Initial data processing request flag	O	O	Power OFF, remote READY ON, or error status flag ON	Power supply is turned ON or hardware reset	*1
RX(n+1)9	Reserved	–	–	–	–	
RX(n+1)A	Error status flag	O	O	No error occurrence	Error occurrence	*1
RX(n+1)B	Remote READY	O	O	Command sending not possible	Normally communication status (Command sending possible)	*1
RX(n+1)C	Reserved	–	–	–	–	
RX(n+1)D	Reserved	–	–	–	–	
RX(n+1)E	Reserved	–	–	–	–	
RX(n+1)F	Reserved	–	–	–	–	

*1: For the details, refer to “6.Communication Between the Master Station and ME”

*2: Alarm of harmonic current cannot be shown by remote input RX.

*3: In case of ME96SSHA/ME96SSRA/ME96SSHB/ME96SSRB, the alarm state is total of the rolling demand W/var/VA.

Note 1: RX is bit data which is stored the input status of ME96.

Note 2: The “n” in the table is determined by the station number of ME96. (Refer to the next page)

(1) Relationships between programmable controller CPU, master module and ME96(RX)

1) The input status of ME96 is stored automatically (for each link scan) in the master station's "remote input RX" buffer memory.

2) The input status stored in the "remote input RX" buffer memory is stored in the CPU device set with the automatic refresh parameters.

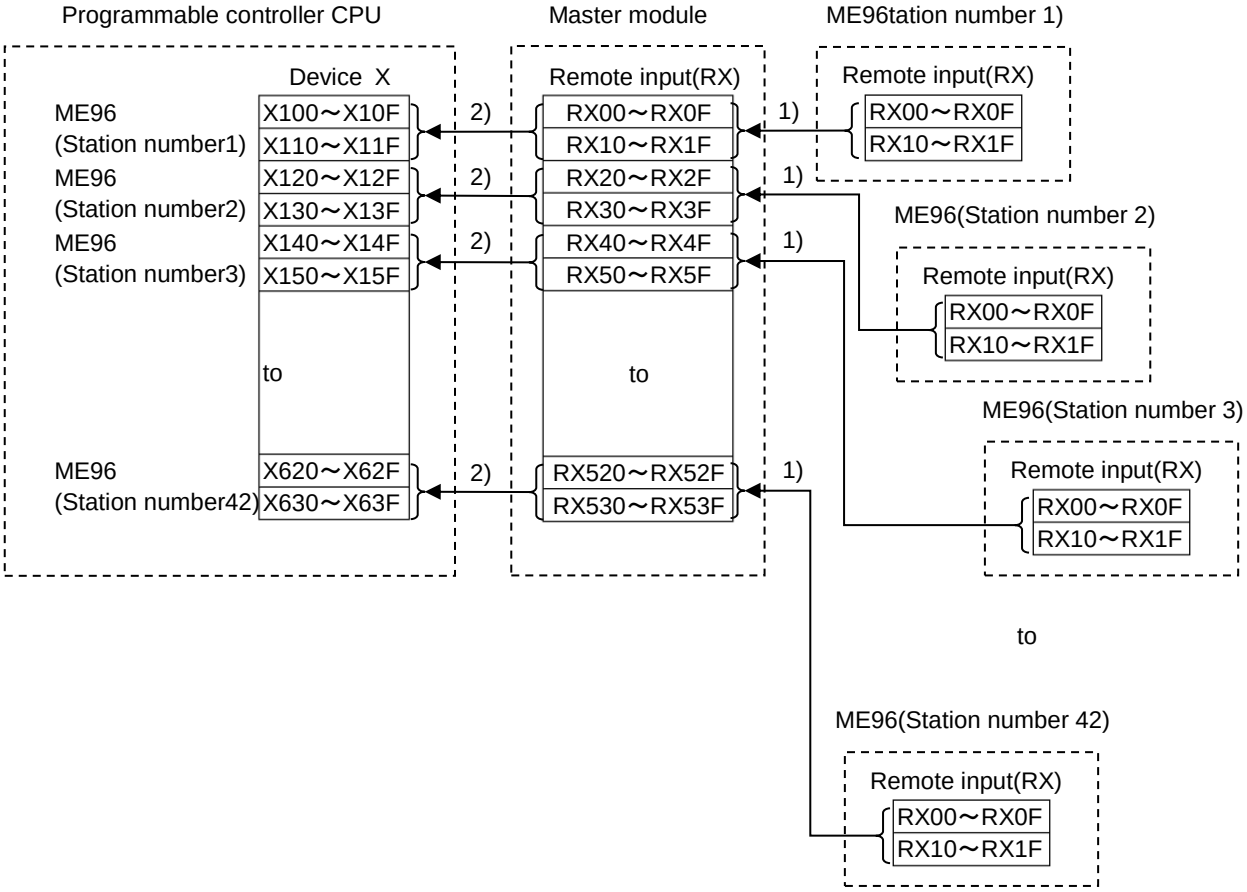

Station number	Device No.			Station number	Device No.			Station number	Device No.		
1	X100	to	X11F	15	X2C0	to	X2D9	29	X480	to	X49F
2	X120	to	X13F	16	X2E0	to	X2F9	30	X4A0	to	X4B9
3	X140	to	X15F	17	X300	to	X31F	31	X4C0	to	X4D9
4	X160	to	X17F	18	X320	to	X33F	32	X4E0	to	X4F9
5	X180	to	X19F	19	X340	to	X35F	33	X500	to	X51F
6	X1A0	to	X1B9	20	X360	to	X37F	34	X520	to	X53F
7	X1C0	to	X1D9	21	X380	to	X39F	35	X540	to	X55F
8	X1E0	to	X1F9	22	X3A0	to	X3B9	36	X560	to	X57F
9	X200	to	X21F	23	X3C0	to	X3D9	37	X580	to	X59F
10	X220	to	X23F	24	X3E0	to	X3F9	38	X5A0	to	X5B9
11	X240	to	X25F	25	X400	to	X41F	39	X5C0	to	X5D9
12	X260	to	X27F	26	X420	to	X43F	40	X5E0	to	X5F9
13	X280	to	X29F	27	X440	to	X45F	41	X600	to	X61F
14	X2A0	to	X2B9	28	X460	to	X47F	42	X620	to	X63F

Device No. is determined to “X100 to X63F” if refresh device of remote input (RX) is set to “X100”.

7.1.2 Remote Output RY

The allocation of the remote output RY of ME96 is shown in the table below.

Device No.	Signal name	Description		Note
		ON(1)→OFF(0)	OFF(0)→ON(1)	
RYn0	Reserved	—	—	
RYn1	Reserved	—	—	
RYn2	Reserved	—	—	
RYn3	Reserved	—	—	
RYn4	Reserved	—	—	
RYn5	Reserved	—	—	
RYn6	Reserved	—	—	
RYn7	Reserved	—	—	
RYn8	Reserved	—	—	
RYn9	Reserved	—	—	
RYnA	Reserved	—	—	
RYnB	Reserved	—	—	
RYnC	Reserved	—	—	
RYnD	Reserved	—	—	
RYnE	Reserved	—	—	
RYnF	Command execution request flag	Cancel command request	Command request	*1
RY(n+1)0	Reserved	—	—	
RY(n+1)1	Reserved	—	—	
RY(n+1)2	Reserved	—	—	
RY(n+1)3	Reserved	—	—	
RY(n+1)4	Reserved	—	—	
RY(n+1)5	Reserved	—	—	
RY(n+1)6	Reserved	—	—	
RY(n+1)7	Reserved	—	—	
RY(n+1)8	Initial data setting completion flag	Cancel normal communication request	Normal communication request	*1
RY(n+1)9	Reserved	—	—	
RY(n+1)A	Error reset request flag	Cancel error reset request	Error reset request	*1
RY(n+1)B	Reserved	—	—	
RY(n+1)C	Reserved	—	—	
RY(n+1)D	Reserved	—	—	
RY(n+1)E	Reserved	—	—	
RY(n+1)F	Reserved	—	—	

*1: For the details, refer to “6.Communication Between the Master Station and ME”

Note 1: The “n” in the table is determined by the station number of ME96. (Refer to the next page)

Warning
Do not read or write to reserved remote registers. If reading or writing is performed, the functions of ME96 are not guaranteed.

(1) Relationships between programmable controller CPU, master module and ME96(RY)

1) The on/off data of the CPU device set with the automatic refresh parameters is stored in the "remote output RY" buffer memory.

2) Remote output RY is automatically set to on/off (for each link scan) according to the output status stored in the "remote output RY" buffer memory.

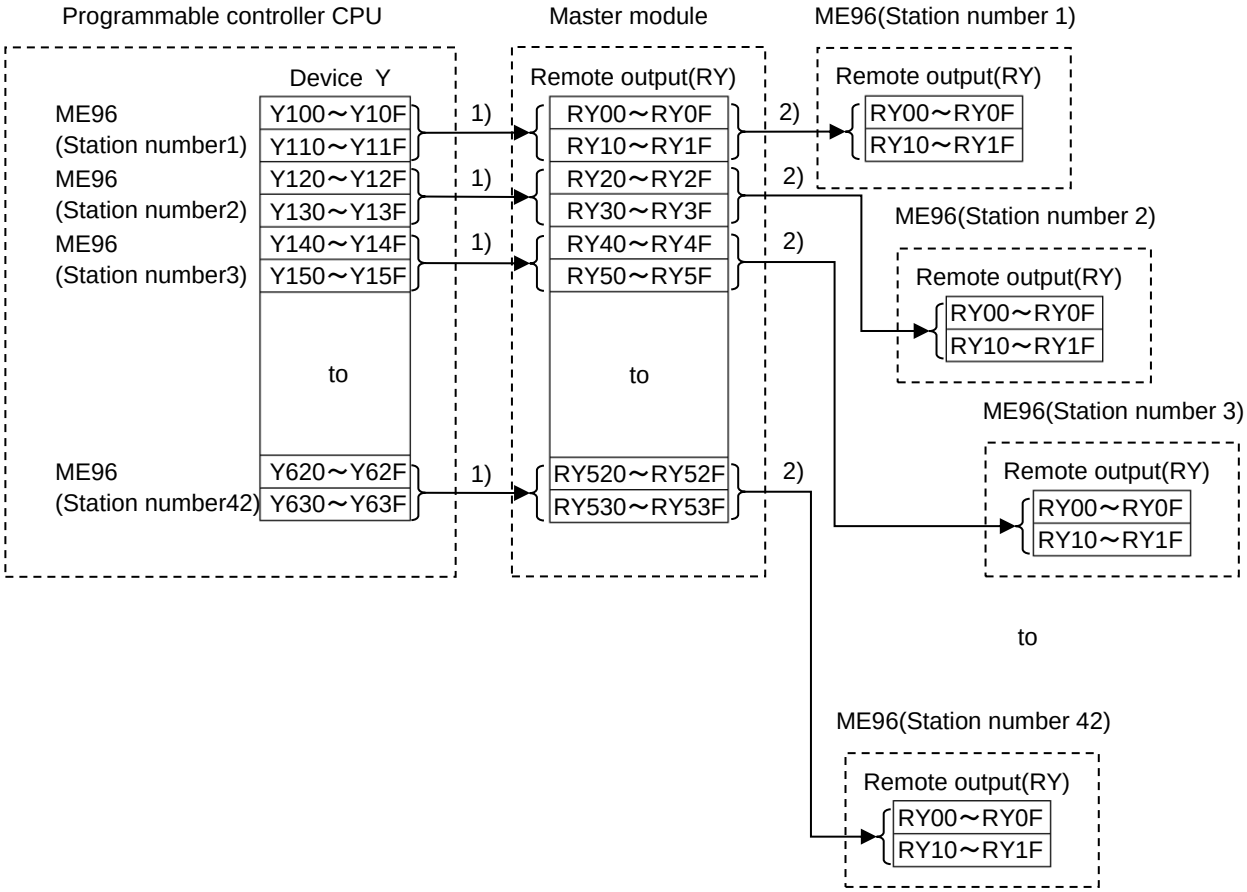

Station number	Device No.			Station number	Device No.			Station number	Device No.		
1	Y100	to	Y11F	15	Y2C0	to	Y2D9	29	Y480	to	Y49F
2	Y120	to	Y13F	16	Y2E0	to	Y2F9	30	Y4A0	to	Y4B9
3	Y140	to	Y15F	17	Y300	to	Y31F	31	Y4C0	to	Y4D9
4	Y160	to	Y17F	18	Y320	to	Y33F	32	Y4E0	to	Y4F9
5	Y180	to	Y19F	19	Y340	to	Y35F	33	Y500	to	Y51F
6	Y1A0	to	Y1B9	20	Y360	to	Y37F	34	Y520	to	Y53F
7	Y1C0	to	Y1D9	21	Y380	to	Y39F	35	Y540	to	Y55F
8	Y1E0	to	Y1F9	22	Y3A0	to	Y3B9	36	Y560	to	Y57F
9	Y200	to	Y21F	23	Y3C0	to	Y3D9	37	Y580	to	Y59F
10	Y220	to	Y23F	24	Y3E0	to	Y3F9	38	Y5A0	to	Y5B9
11	Y240	to	Y25F	25	Y400	to	Y41F	39	Y5C0	to	Y5D9
12	Y260	to	Y27F	26	Y420	to	Y43F	40	Y5E0	to	Y5F9
13	Y280	to	Y29F	27	Y440	to	Y45F	41	Y600	to	Y61F
14	Y2A0	to	Y2B9	28	Y460	to	Y47F	42	Y620	to	Y63F

Device No. is determined to “Y100 to Y63F” if refresh device of remote output (RY) is set to “Y100”.

7.2 Remote Register (RWr, RWw)

The remote register RWr and RWw are used to communicate word data between the master station and ME96. Because it occupiers 1 station, the remote registers RWr and RWw each have 4 words in length.

ME96 has the special-purpose commands for each measurement items and setting items. It becomes possible to monitor each measurement values or set each parameter by writing into the remote register RWw of the master station command and the related data allocated to the item you want to monitor or set.

(1) Relationships between programmable controller CPU, master module and ME96(RWr)

1) The remote register RWr data of a remote device station is automatically stored in the "remote register RWr" buffer memory of the master station.

2) The remote register RWr data of ME96 stored in the "remote register RWr" buffer memory is stored in the CPU device set with the automatic refresh parameters.

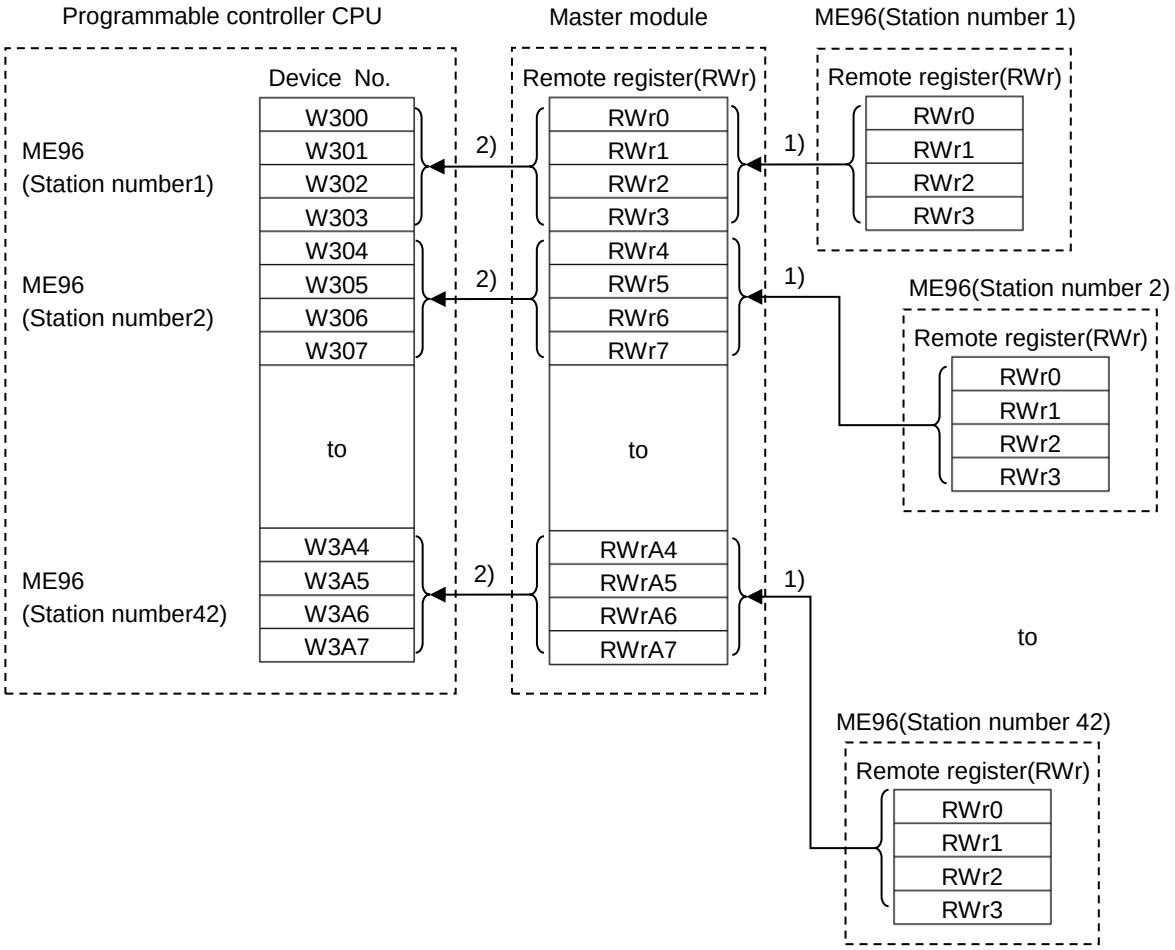

Station number	Device No.			Station number	Device No.			Station number	Device No.		
1	W300	to	W303	15	W338	to	W33B	29	W370	to	W373
2	W304	to	W307	16	W33C	to	W33F	30	W374	to	W377
3	W308	to	W30B	17	W340	to	W343	31	W378	to	W37B
4	W30C	to	W30F	18	W344	to	W347	32	W37C	to	W37F
5	W310	to	W313	19	W348	to	W34B	33	W380	to	W383
6	W314	to	W317	20	W34C	to	W34F	34	W384	to	W387
7	W318	to	W31B	21	W350	to	W353	35	W388	to	W38B
8	W31C	to	W31F	22	W354	to	W357	36	W38C	to	W38F
9	W320	to	W323	23	W358	to	W35B	37	W390	to	W393
10	W324	to	W327	24	W35C	to	W35F	38	W394	to	W397
11	W328	to	W32B	25	W360	to	W363	39	W398	to	W39B
12	W32C	to	W32F	26	W364	to	W367	40	W39C	to	W39F
13	W330	to	W333	27	W368	to	W36B	41	W3A0	to	W3A3
14	W334	to	W337	28	W36C	to	W36F	42	W3A4	to	W3A7

Device No. is determined to “W300 to W3A7” if refresh device of remote register (RWr) is set to “W300”.

(2) Relationships between programmable controller CPU, master module and ME96(RWw)

1) The transmission data of the CPU device set with the automatic refresh parameters is stored in the "remote register RWw" buffer memory.

2) The data stored in the "remote register RWw" buffer memory is automatically sent to the remote register RWw of each remote device station.

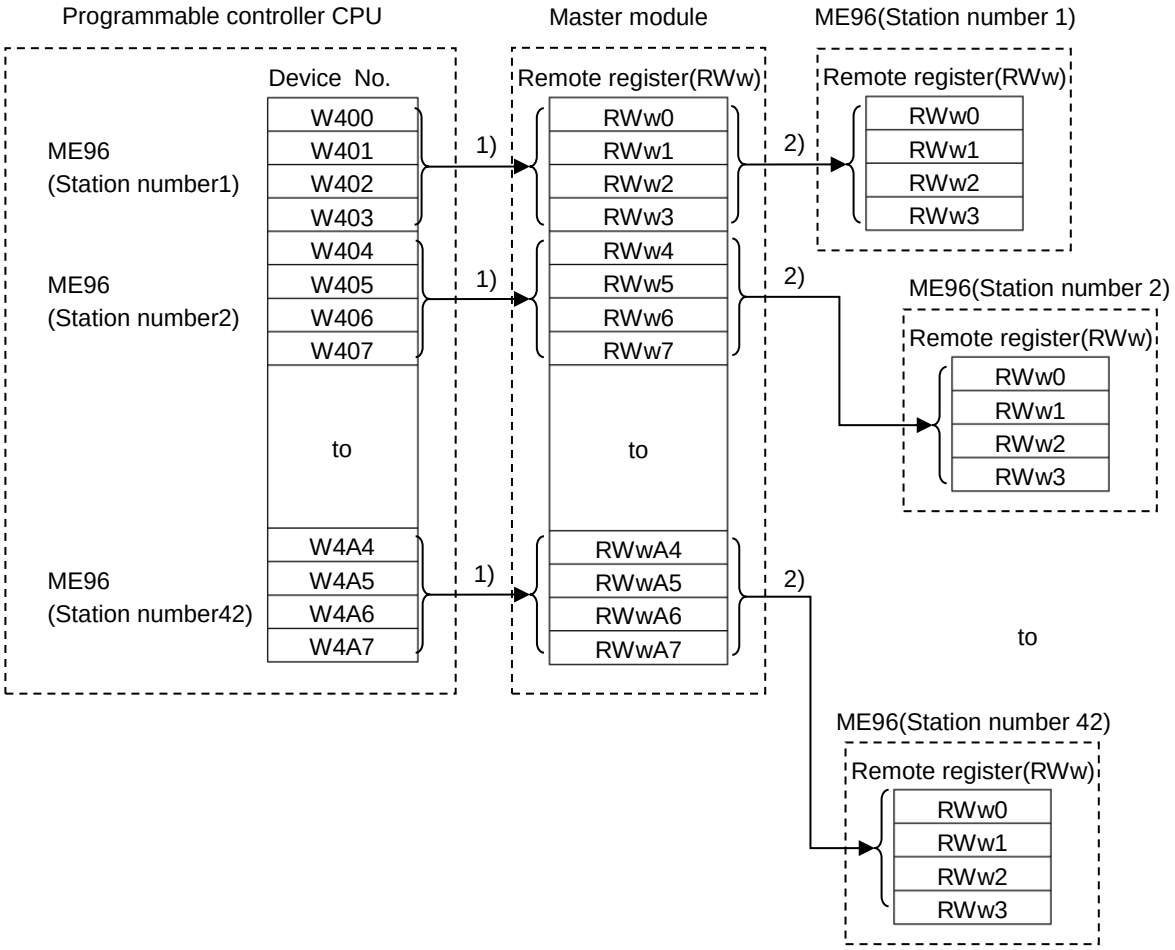

Station number	Device No.			Station number	Device No.			Station number	Device No.		
1	W400	to	W403	15	W438	to	W43B	29	W470	to	W473
2	W404	to	W407	16	W43C	to	W43F	30	W474	to	W477
3	W408	to	W40B	17	W440	to	W443	31	W478	to	W47B
4	W40C	to	W40F	18	W444	to	W447	32	W47C	to	W47F
5	W410	to	W413	19	W448	to	W44B	33	W480	to	W483
6	W414	to	W417	20	W44C	to	W44F	34	W484	to	W487
7	W418	to	W41B	21	W450	to	W453	35	W488	to	W48B
8	W41C	to	W41F	22	W454	to	W457	36	W48C	to	W48F
9	W420	to	W423	23	W458	to	W45B	37	W490	to	W493
10	W424	to	W427	24	W45C	to	W45F	38	W494	to	W497
11	W428	to	W42B	25	W460	to	W463	39	W498	to	W49B
12	W42C	to	W42F	26	W464	to	W467	40	W49C	to	W49F
13	W430	to	W433	27	W468	to	W46B	41	W4A0	to	W4A3
14	W434	to	W437	28	W46C	to	W46F	42	W4A4	to	W4A7

Device No. is determined to “W400 to W4A7” if refresh device of remote register (RWw) is set to “W400”.

7.2.1 Supported Commands

The commands supported by ME96 are listed in the table below. For the details of each commands, refer to “7.2.2 Details of Commands“.

Table 7.1 Supported Commands

Command	Name	Description	Note	page
1H	Data Monitor	For monitoring measurement		25
2H	Data Set	For setting measurement		39

Note) 1: The command can be sent only when the remote READY is ON.
2: The command execution request flag and command completion reply flag are used to send the command and receive replay data. For details of each flag, refer to “6.4 Normal Communication”.
3: In case of monitoring the present value and its maximum continuously according to the renewal data timing of ME96, the maximum may be smaller than the present value.

7.2.2 Details of Commands

The details of the command and reply data supported by ME96 are described here.

(1) Data Monitor Command (1H)

1H	Data Monitor

- The measurement items are assigned “Unit No.”, ”Group No.” and “Channel No.”. (Refer to Table 7.2 to Table 7.13.)
- After writing the command as shown below into the remote register RWw, set the command excution request flag to ON(1). When the command completion reply frag is turned on, the item specified is reset.
- The details of the data format are shown in the section 7.2.3.
- The monitering item is changed with the setting of phase wire system. (Refer to Table 7.2 to Table 7.13.)

Remote register RWw（Programmable controller→ME96）

	b15 b8	b7 b4	b3 b0
m	Group No.	Unit No.	1H (Command) *1
m+1	00H	Channel No.	
m+2	00H	00H	
m+3	00H	00H	

Remote register RWr（ME96→Programmable controller）

	b15 b8	b7 b0
n	Channel No.	Group No.
n+1	Index number	00H
n+2	Low data	
n+3	High data	

* When error occurs, refer to 7.2.5 About Error Occurrence.

m, n : Address is allocated to the master module by the station number setting.

Note: ME96 can monitor the value of the measurement items which are not displayed.

*1: It is described as 8 bits data by combining the unit No. (high 4 bits) and the command (low 4 bits).

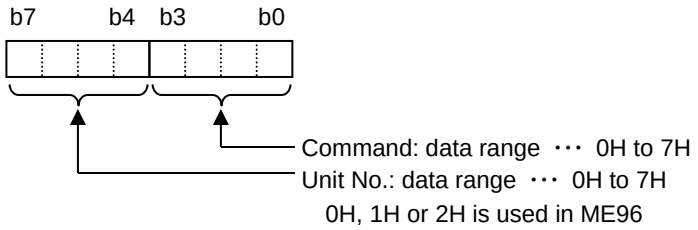

For example, when the unit No. is 0H and the command is 1H, it becomes “01H”.

Table 7.2 Group Channel List (1/12)

Unit No.	Group (h)	Channel (h)	Name of Cannel				ME96SSH-MB ME96SSHA-MB ME96SSHB-MB			ME96SSR-MB ME96SSRA-MB ME96SSRB-MB			ME96NSR		Data type	Note
							3P4W	3P3W 1P3W	1P2W	3P4W	3P3W 1P3W	1P2W	3P4W	3P3W		
0	F0	02	Model code				○	○	○	○	○	○	○	○	⑥	
0	E0	11	Primary current				○	○	○	○	○	○	○	○	⑤	
0	E0	12	Primary voltage(L-L)				− (*6)	○	○	− (*6)	○	○	○	○	⑤	
0	E0	1B	Primary voltage(L-N)				○	−	−	○	−	−	○	−	⑤	
0	E0	1C	Secondary voltage(L-N)				○	○	○	○	○	○	○	○	⑤	*2,*3
0	E0	13	Phase & Wiring				○	○	○	○	○	○	○	○	⑥	
0	E0	1D	Frequency				○	○	○	○	○	○	−	−	⑤	
0	E0	1E	Secondary current				○	○	○	○	○	○	−	−	⑤	
0	E0	18	Alarm items				○	○	○	○	○	○	○	○	⑦	
0	E0	19	Byte monitor				○	○	○	○	○	○	○	○	⑥	
0	E0	1A	Attribute monitor				○	○	○	○	○	○	○	○	⑥	
0	02	E0	Time constant for current demand	sec.			○	○	○	○	○	○	○	○	⑥	
0	08	E4	Interval time constant	min.			○	○	○	○(*4)	○(*4)	○(*4)	−	−	⑥	
0	08	E5	Subinterval time constant	min.			○	○	○	○(*4)	○(*4)	○(*4)	−	−	⑥	
0	01	01	Average current	A	Inst.		○	○	−	○	○	−	○	○	①	
0	01	21	Phase 1 current	A	Inst.		○	○	○	○	○	○	○	○	①	
0	01	41	Phase 2 current	A	Inst.		○	○	−	○	○	−	○	○	①	
0	01	61	Phase 3 current	A	Inst.		○	○	−	○	○	−	○	○	①	
0	01	81	Phase N current	A	Inst.		○	−	−	○	−	−	○	−	①	
0	01	02	Average current	A	max.		○	○	−	○	○	−	○	○	①	
0	01	22	Phase 1 current	A	max.		○	○	○	○	○	○	○	○	①	
0	01	42	Phase 2 current	A	max.		○	○	−	○	○	−	○	○	①	
0	01	62	Phase 3 current	A	max.		○	○	−	○	○	−	○	○	①	
0	01	82	Phase N current	A	max.		○	−	−	○	−	−	○	−	①	
0	01	05	Average current	A	min.		○	○	−	○	○	−	○	○	①	
0	01	25	Phase 1 current	A	min.		○	○	○	○	○	○	○	○	①	
0	01	45	Phase 2 current	A	min.		○	○	−	○	○	−	○	○	①	
0	01	65	Phase 3 current	A	min.		○	○	−	○	○	−	○	○	①	
0	01	85	Phase N current	A	min.		○	−	−	○	−	−	○	−	①	
0	02	01	Average current demand	A	Inst.		○	○	−	○	○	−	○	○	①	
0	02	21	Phase 1 current demand	A	Inst.		○	○	○	○	○	○	○	○	①	
0	02	41	Phase 2 current demand	A	Inst.		○	○	−	○	○	−	○	○	①	
0	02	61	Phase 3 current demand	A	Inst.		○	○	−	○	○	−	○	○	①	
0	02	81	Phase N current demand	A	Inst.		○	−	−	○	−	−	○	−	①	
0	02	02	Average current demand	A	max.		○	○	−	○	○	−	○	○	①	
0	02	22	Phase 1 current demand	A	max.		○	○	○	○	○	○	○	○	①	
0	02	42	Phase 2 current demand	A	max.		○	○	−	○	○	−	○	○	①	
0	02	62	Phase 3 current demand	A	max.		○	○	−	○	○	−	○	○	①	
0	02	82	Phase N current demand	A	max.		○	−	−	○	−	−	○	−	①	
0	02	05	Average current demand	A	min.		○	○	−	○	○	−	○	○	①	
0	02	25	Phase 1 current demand	A	min.		○	○	○	○	○	○	○	○	①	
0	02	45	Phase 2 current demand	A	min.		○	○	−	○	○	−	○	○	①	
0	02	65	Phase 3 current demand	A	min.		○	○	−	○	○	−	○	○	①	
0	02	85	Phase N current demand	A	min.		○	−	−	○	−	−	○	−	①	
0	05	01	Average L-L voltage	V	Inst.		○	○	−	○	○	−	○	○	①	
0	05	21	1-2 voltage	V	Inst.		○	○	○	○	○	○	○	○	①	
0	05	41	2-3 voltage	V	Inst.		○	○	−	○	○	−	○	○	①	
0	05	61	3-1 voltage	V	Inst.		○	○	−	○	○	−	○	○	①	
0	05	02	Average L-L voltage	V	max.		○	○	−	○	○	−	○	○	①	
0	05	22	1-2 voltage	V	max.		○	○	○	○	○	○	○	○	①	
0	05	42	2-3 voltage	V	max.		○	○	−	○	○	−	○	○	①	
0	05	62	3-1 voltage	V	max.		○	○	−	○	○	−	○	○	①	
0	05	05	Average L-L voltage	V	min.		○	○	−	○	○	−	○	○	①	
0	05	25	1-2 voltage	V	min.		○	○	○	○	○	○	○	○	①	
0	05	45	2-3 voltage	V	min.		○	○	−	○	○	−	○	○	①	
0	05	65	3-1 voltage	V	min.		○	○	−	○	○	−	○	○	①	

Note: Measurement data correspond as follows according to setting of phase wiring. (Maximum / Minimum data and harmonic data are same.)

Name of channel	Phase wiring			
	3P3W	1P3W(1N3)	1P3W(1N2)	1P2W
1-2 voltage	1-2 voltage	1-N voltage	1-N voltage	Voltage
2-3 voltage	2-3 voltage	3-N voltage	2-N voltage	-
3-1 voltage	3-1 voltage	1-3 voltage	1-3 voltage	-
Phase 1 current	Phase 1 current	Phase 1 current	Phase 1 current	Current
Phase 2 current	Phase 2 current	Phase N current	Phase N current	-
Phase 3 current	Phase 3 current	Phase 3 current	Phase 2 current	-

Table 7.3 Group Channel List (2/12)

Unit No.	Group (h)	Channel (h)	Name of Cannel			ME96SSH-MB ME96SSHA-MB ME96SSHB-MB			ME96SSR-MB ME96SSRA-MB ME96SSRB-MB			ME96NSR		Data type	Note
						3P4W	3P3W 1P3W	1P2W	3P4W	3P3W 1P3W	1P2W	3P4W	3P3W		
0	03	01	Average L-N voltage	V	Inst.	○	–	–	○	–	–	○	–	①	
0	03	21	1-N voltage	V	Inst.	○	–	–	○	–	–	○	–	①	
0	03	41	2-N voltage	V	Inst.	○	–	–	○	–	–	○	–	①	
0	03	61	3-N voltage	V	Inst.	○	–	–	○	–	–	○	–	①	
0	03	02	Average L-N voltage	V	max.	○	–	–	○	–	–	○	–	①	
0	03	22	1-N voltage	V	max.	○	–	–	○	–	–	○	–	①	
0	03	42	2-N voltage	V	max.	○	–	–	○	–	–	○	–	①	
0	03	62	3-N voltage	V	max.	○	–	–	○	–	–	○	–	①	
0	03	05	Average L-N voltage	V	min.	○	–	–	○	–	–	○	–	①	
0	03	25	1-N voltage	V	min.	○	–	–	○	–	–	○	–	①	
0	03	45	2-N voltage	V	min.	○	–	–	○	–	–	○	–	①	
0	03	65	3-N voltage	V	min.	○	–	–	○	–	–	○	–	①	
0	07	01	Total active power	kW	Inst.	○	○	○	○	○	○	○	○	①	
0	07	21	Phase 1 active power	kW	Inst.	○	–	–	○	–	–	○	–	①	
0	07	41	Phase 2 active power	kW	Inst.	○	–	–	○	–	–	○	–	①	
0	07	61	Phase 3 active power	kW	Inst.	○	–	–	○	–	–	○	–	①	
0	07	02	Total active power	kW	max.	○	–	–	○	–	–	○	–	①	
0	07	22	Phase 1 active power	kW	max.	○	○	○	○	○	○	○	○	①	
0	07	42	Phase 2 active power	kW	max.	○	–	–	○	–	–	○	–	①	
0	07	62	Phase 3 active power	kW	max.	○	–	–	○	–	–	○	–	①	
0	07	05	Total active power	kW	min.	○	○	○	○	○	○	○	○	①	
0	07	25	Phase 1 active power	kW	min.	○	–	–	○	–	–	○	–	①	
0	07	45	Phase 2 active power	kW	min.	○	–	–	○	–	–	○	–	①	
0	07	65	Phase 3 active power	kW	min.	○	–	–	○	–	–	○	–	①	
0	08	01	Total rolling demand(kW)	kW	Last	○	○	○	○(*4)	○(*4)	○(*4)	–	–	①	*7
0	08	02	Total rolling demand(kW)	kW	max.	○	○	○	○(*4)	○(*4)	○(*4)	–	–	①	
2	08	20	Total rolling demand(kW)	kW	Present	○(*5)	○(*5)	○(*5)	○(*5)	○(*5)	○(*5)	–	–	①	
2	08	21	Total rolling demand(kW)	kW	Predict	○(*5)	○(*5)	○(*5)	○(*5)	○(*5)	○(*5)	–	–	①	
0	09	01	Total reactive power	kvar	Inst.	○	○	○	○	○	○	○	○	①	
0	09	21	Phase 1 reactive power	kvar	Inst.	○	–	–	○	–	–	○	–	①	
0	09	41	Phase 2 reactive power	kvar	Inst.	○	–	–	○	–	–	○	–	①	
0	09	61	Phase 3 reactive power	kvar	Inst.	○	–	–	○	–	–	○	–	①	
0	09	02	Total reactive power	kvar	max.	○	○	○	○	○	○	○	○	①	
0	09	22	Phase 1 reactive power	kvar	max.	○	–	–	○	–	–	○	–	①	
0	09	42	Phase 2 reactive power	kvar	max.	○	–	–	○	–	–	○	–	①	
0	09	62	Phase 3 reactive power	kvar	max.	○	–	–	○	–	–	○	–	①	
0	09	05	Total reactive power	kvar	min.	○	○	○	○	○	○	○	○	①	
0	09	25	Phase 1 reactive power	kvar	min.	○	–	–	○	–	–	○	–	①	
0	09	45	Phase 2 reactive power	kvar	min.	○	–	–	○	–	–	○	–	①	
0	09	65	Phase 3 reactive power	kvar	min.	○	–	–	○	–	–	○	–	①	
0	0A	01	Total rolling demand(kvar)	kvar	Last	○(*4)	○(*4)	○(*4)	○(*4)	○(*4)	○(*4)	–	–	①	*7
0	0A	02	Total rolling demand(kvar)	kvar	max.	○(*4)	○(*4)	○(*4)	○(*4)	○(*4)	○(*4)	–	–	①	
2	0A	20	Total rolling demand(kvar)	kvar	Present	○(*5)	○(*5)	○(*5)	○(*5)	○(*5)	○(*5)	–	–	①	
2	0A	21	Total rolling demand(kvar)	kvar	Predict	○(*5)	○(*5)	○(*5)	○(*5)	○(*5)	○(*5)	–	–	①	
1	0B	01	Total apparent power	kVA	Inst.	○	○(*4)	○(*4)	○	○(*4)	○(*4)	○	–	①	
1	0B	21	Phase 1 apparent power	kVA	Inst.	○	–	–	○	–	–	○	–	①	
1	0B	41	Phase 2 apparent power	kVA	Inst.	○	–	–	○	–	–	○	–	①	
1	0B	61	Phase 3 apparent power	kVA	Inst.	○	–	–	○	–	–	○	–	①	
1	0B	02	Total apparent power	kVA	max.	○	○(*4)	○(*4)	○	○(*4)	○(*4)	○	–	①	
1	0B	22	Phase 1 apparent power	kVA	max.	○	–	–	○	–	–	○	–	①	
1	0B	42	Phase 2 apparent power	kVA	max.	○	–	–	○	–	–	○	–	①	
1	0B	62	Phase 3 apparent power	kVA	max.	○	–	–	○	–	–	○	–	①	
1	0B	05	Total apparent power	kVA	min.	○	○(*4)	○(*4)	○	○(*4)	○(*4)	○	–	①	
1	0B	25	Phase 1 apparent power	kVA	min.	○	–	–	○	–	–	○	–	①	
1	0B	45	Phase 2 apparent power	kVA	min.	○	–	–	○	–	–	○	–	①	
1	0B	65	Phase 3 apparent power	kVA	min.	○	–	–	○	–	–	○	–	①	
0	0C	01	Total rolling demand(kVA)	kVA	Last	○(*4)	○(*4)	○(*4)	○(*4)	○(*4)	○(*4)	–	–	①	*7
0	0C	02	Total rolling demand(kVA)	kVA	max.	○(*4)	○(*4)	○(*4)	○(*4)	○(*4)	○(*4)	–	–	①	
2	0C	20	Total rolling demand(kVA)	kVA	Present	○(*5)	○(*5)	○(*5)	○(*5)	○(*5)	○(*5)	–	–	①	
2	0C	21	Total rolling demand(kVA)	kVA	Predict	○(*5)	○(*5)	○(*5)	○(*5)	○(*5)	○(*5)	–	–	①	

Table 7.4 Group Channel List (3/12)

Unit No.	Group (h)	Channel (h)	Name of Cannel				ME96SSH-MB ME96SSHA-MB ME96SSHB-MB			ME96SSR-MB ME96SSRA-MB ME96SSRB-MB			ME96NSR		Data type	Note
							3P4W	3P3W 1P3W	1P2W	3P4W	3P3W 1P3W	1P2W	3P4W	3P3W		
0	0D	01	Total power factor	%	Inst.		○	○	○	○	○	○	○	○	①	
0	0D	21	Phase 1 power factor	%	Inst.		○	–	–	○	–	–	○	–	①	
0	0D	41	Phase 2 power factor	%	Inst.		○	–	–	○	–	–	○	–	①	
0	0D	61	Phase 3 power factor	%	Inst.		○	–	–	○	–	–	○	–	①	
0	0D	02	Total power factor	%	max.		○	○	○	○	○	○	○	○	①	
0	0D	22	Phase 1 power factor	%	max.		○	–	–	○	–	–	○	–	①	
0	0D	42	Phase 2 power factor	%	max.		○	–	–	○	–	–	○	–	①	
0	0D	62	Phase 3 power factor	%	max.		○	–	–	○	–	–	○	–	①	
0	0D	05	Total power factor	%	min.		○	○	○	○	○	○	○	○	①	
0	0D	25	Phase 1 power factor	%	min.		○	–	–	○	–	–	○	–	①	
0	0D	45	Phase 2 power factor	%	min.		○	–	–	○	–	–	○	–	①	
0	0D	65	Phase 3 power factor	%	min.		○	–	–	○	–	–	○	–	①	
0	0F	01	Frequency	Hz	Inst.		○	○	○	○	○	○	○	○	①	
0	0F	02	Frequency	Hz	max.		○	○	○	○	○	○	○	○	①	
0	0F	05	Frequency	Hz	min.		○	○	○	○	○	○	○	○	①	
0	63	21	1-2 harmonic voltage	V	Inst.	Total	–	○	○	–	○	○	–	○	①	
0	4D	21	1-2 harmonic voltage	V	Inst.	1st	–	○	○	–	○	○	–	○	①	
0	4F	21	1-2 harmonic voltage	V	Inst.	3rd	–	○	○	–	○	○	–	○	①	
0	51	21	1-2 harmonic voltage	V	Inst.	5th	–	○	○	–	○	○	–	○	①	
0	53	21	1-2 harmonic voltage	V	Inst.	7th	–	○	○	–	○	○	–	○	①	
0	55	21	1-2 harmonic voltage	V	Inst.	9th	–	○	○	–	○	○	–	○	①	
0	57	21	1-2 harmonic voltage	V	Inst.	11th	–	○	○	–	○	○	–	○	①	
0	59	21	1-2 harmonic voltage	V	Inst.	13th	–	○	○	–	○	○	–	○	①	
1	5B	21	1-2 harmonic voltage	V	Inst.	15th	–	○	○	–	○(*4)	○(*4)	–	–	①	
1	5D	21	1-2 harmonic voltage	V	Inst.	17th	–	○	○	–	○(*4)	○(*4)	–	–	①	
1	5F	21	1-2 harmonic voltage	V	Inst.	19th	–	○	○	–	○(*4)	○(*4)	–	–	①	
1	61	21	1-2 harmonic voltage	V	Inst.	21st	–	○	○	–	–	–	–	–	①	
1	79	02	1-2 harmonic voltage	V	Inst.	23rd	–	○	○	–	–	–	–	–	①	
1	79	04	1-2 harmonic voltage	V	Inst.	25th	–	○	○	–	–	–	–	–	①	
1	79	06	1-2 harmonic voltage	V	Inst.	27th	–	○	○	–	–	–	–	–	①	
1	79	08	1-2 harmonic voltage	V	Inst.	29th	–	○	○	–	–	–	–	–	①	
1	79	0A	1-2 harmonic voltage	V	Inst.	31st	–	○	○	–	–	–	–	–	①	
0	76	86	1-2 voltage THD	%	Inst.	Total	–	○	○	–	○	○	–	○	①	
0	76	73	1-2 voltage harmonic distortion	%	Inst.	3rd	–	○	○	–	○	○	–	○	①	
0	76	75	1-2 voltage harmonic distortion	%	Inst.	5th	–	○	○	–	○	○	–	○	①	
0	76	77	1-2 voltage harmonic distortion	%	Inst.	7th	–	○	○	–	○	○	–	○	①	
0	76	79	1-2 voltage harmonic distortion	%	Inst.	9th	–	○	○	–	○	○	–	○	①	
0	76	7B	1-2 voltage harmonic distortion	%	Inst.	11th	–	○	○	–	○	○	–	○	①	
0	76	7D	1-2 voltage harmonic distortion	%	Inst.	13th	–	○	○	–	○	○	–	○	①	
1	76	7F	1-2 voltage harmonic distortion	%	Inst.	15th	–	○	○	–	○(*4)	○(*4)	–	–	①	
1	76	81	1-2 voltage harmonic distortion	%	Inst.	17th	–	○	○	–	○(*4)	○(*4)	–	–	①	
1	76	83	1-2 voltage harmonic distortion	%	Inst.	19th	–	○	○	–	○(*4)	○(*4)	–	–	①	
1	76	85	1-2 voltage harmonic distortion	%	Inst.	21st	–	○	○	–	–	–	–	–	①	
1	79	72	1-2 voltage harmonic distortion	%	Inst.	23rd	–	○	○	–	–	–	–	–	①	
1	79	74	1-2 voltage harmonic distortion	%	Inst.	25th	–	○	○	–	–	–	–	–	①	
1	79	76	1-2 voltage harmonic distortion	%	Inst.	27th	–	○	○	–	–	–	–	–	①	
1	79	78	1-2 voltage harmonic distortion	%	Inst.	29th	–	○	○	–	–	–	–	–	①	
1	79	7A	1-2 voltage harmonic distortion	%	Inst.	31st	–	○	○	–	–	–	–	–	①	

Table 7.5 Group Channel List (4/12)

Unit No.	Group (h)	Channel (h)	Name of Cannel				ME96SSH-MB ME96SSHA-MB ME96SSHB-MB			ME96SSR-MB ME96SSRA-MB ME96SSRB-MB			ME96NSR		Data type	Note
							3P4W	3P3W 1P3W	1P2W	3P4W	3P3W 1P3W	1P2W	3P4W	3P3W		
0	63	41	2-3 harmonic voltage	V	Inst.	Total	–	○	–	–	○	–	–	○	①	
0	4D	41	2-3 harmonic voltage	V	Inst.	1st	–	○	–	–	○	–	–	○	①	
0	4F	41	2-3 harmonic voltage	V	Inst.	3rd	–	○	–	–	○	–	–	○	①	
0	51	41	2-3 harmonic voltage	V	Inst.	5th	–	○	–	–	○	–	–	○	①	
0	53	41	2-3 harmonic voltage	V	Inst.	7th	–	○	–	–	○	–	–	○	①	
0	55	41	2-3 harmonic voltage	V	Inst.	9th	–	○	–	–	○	–	–	○	①	
0	57	41	2-3 harmonic voltage	V	Inst.	11th	–	○	–	–	○	–	–	○	①	
0	59	41	2-3 harmonic voltage	V	Inst.	13th	–	○	–	–	○	–	–	○	①	
1	5B	41	2-3 harmonic voltage	V	Inst.	15th	–	○	–	–	○(*4)	–	–	–	①	
1	5D	41	2-3 harmonic voltage	V	Inst.	17th	–	○	–	–	○(*4)	–	–	–	①	
1	5F	41	2-3 harmonic voltage	V	Inst.	19th	–	○	–	–	○(*4)	–	–	–	①	
1	61	41	2-3 harmonic voltage	V	Inst.	21st	–	○	–	–	–	–	–	–	①	
1	79	18	2-3 harmonic voltage	V	Inst.	23rd	–	○	–	–	–	–	–	–	①	
1	79	1A	2-3 harmonic voltage	V	Inst.	25th	–	○	–	–	–	–	–	–	①	
1	79	1C	2-3 harmonic voltage	V	Inst.	27th	–	○	–	–	–	–	–	–	①	
1	79	1E	2-3 harmonic voltage	V	Inst.	29th	–	○	–	–	–	–	–	–	①	
1	79	20	2-3 harmonic voltage	V	Inst.	31st	–	○	–	–	–	–	–	–	①	
0	76	9C	2-3 voltage THD	%	Inst.	Total	–	○	–	–	○	–	–	○	①	
0	76	89	2-3 voltage harmonic distortion	%	Inst.	3rd	–	○	–	–	○	–	–	○	①	
0	76	8B	2-3 voltage harmonic distortion	%	Inst.	5th	–	○	–	–	○	–	–	○	①	
0	76	8D	2-3 voltage harmonic distortion	%	Inst.	7th	–	○	–	–	○	–	–	○	①	
0	76	8F	2-3 voltage harmonic distortion	%	Inst.	9th	–	○	–	–	○	–	–	○	①	
0	76	91	2-3 voltage harmonic distortion	%	Inst.	11th	–	○	–	–	○	–	–	○	①	
0	76	93	2-3 voltage harmonic distortion	%	Inst.	13th	–	○	–	–	○	–	–	○	①	
1	76	95	2-3 voltage harmonic distortion	%	Inst.	15th	–	○	–	–	○(*4)	–	–	–	①	
1	76	97	2-3 voltage harmonic distortion	%	Inst.	17th	–	○	–	–	○(*4)	–	–	–	①	
1	76	99	2-3 voltage harmonic distortion	%	Inst.	19th	–	○	–	–	○(*4)	–	–	–	①	
1	76	9B	2-3 voltage harmonic distortion	%	Inst.	21st	–	○	–	–	–	–	–	–	①	
1	79	88	2-3 voltage harmonic distortion	%	Inst.	23rd	–	○	–	–	–	–	–	–	①	
1	79	8A	2-3 voltage harmonic distortion	%	Inst.	25th	–	○	–	–	–	–	–	–	①	
1	79	8C	2-3 voltage harmonic distortion	%	Inst.	27th	–	○	–	–	–	–	–	–	①	
1	79	8E	2-3 voltage harmonic distortion	%	Inst.	29th	–	○	–	–	–	–	–	–	①	
1	79	90	2-3 voltage harmonic distortion	%	Inst.	31st	–	○	–	–	–	–	–	–	①	
0	76	DE	L-L voltage THD	%	max.	Total	–	○	○	–	○	○	–	○	①	
0	4D	A2	L-L harmonic voltage	V	max.	1st	–	○	○	–	○	○	–	○	①	
0	76	CB	L-L voltage harmonic distortion	%	max.	3rd	–	○	○	–	○	○	–	○	①	
0	76	CD	L-L voltage harmonic distortion	%	max.	5th	–	○	○	–	○	○	–	○	①	
0	76	CF	L-L voltage harmonic distortion	%	max.	7th	–	○	○	–	○	○	–	○	①	
0	76	D1	L-L voltage harmonic distortion	%	max.	9th	–	○	○	–	○	○	–	○	①	
0	76	D3	L-L voltage harmonic distortion	%	max.	11th	–	○	○	–	○	○	–	○	①	
0	76	D5	L-L voltage harmonic distortion	%	max.	13th	–	○	○	–	○	○	–	○	①	
1	76	D7	L-L voltage harmonic distortion	%	max.	15th	–	○	○	–	○(*4)	○(*4)	–	–	①	
1	76	D9	L-L voltage harmonic distortion	%	max.	17th	–	○	○	–	○(*4)	○(*4)	–	–	①	
1	76	DB	L-L voltage harmonic distortion	%	max.	19th	–	○	○	–	○(*4)	○(*4)	–	–	①	
1	76	DD	L-L voltage harmonic distortion	%	max.	21st	–	○	○	–	–	–	–	–	①	
1	79	CA	L-L voltage harmonic distortion	%	max.	23rd	–	○	○	–	–	–	–	–	①	
1	79	CC	L-L voltage harmonic distortion	%	max.	25th	–	○	○	–	–	–	–	–	①	
1	79	CE	L-L voltage harmonic distortion	%	max.	27th	–	○	○	–	–	–	–	–	①	
1	79	D0	L-L voltage harmonic distortion	%	max.	29th	–	○	○	–	–	–	–	–	①	
1	79	D2	L-L voltage harmonic distortion	%	max.	31st	–	○	○	–	–	–	–	–	①	

Table 7.6 Group Channel List (5/12)

Unit No.	Group (h)	Channel (h)	Name of Cannel				ME96SSH-MB ME96SSHA-MB ME96SSHB-MB			ME96SSR-MB ME96SSRA-MB ME96SSRB-MB			ME96NSR		Data type	Note
							3P4W	3P3W 1P3W	1P2W	3P4W	3P3W 1P3W	1P2W	3P4W	3P3W		
0	4B	21	1-N harmonic voltage	V	Inst.	Total	○	–	–	○	–	–	○	–	①	
0	35	21	1-N harmonic voltage	V	Inst.	1st	○	–	–	○	–	–	○	–	①	
1	37	21	1-N harmonic voltage	V	Inst.	3rd	○	–	–	○	–	–	○	–	①	
1	39	21	1-N harmonic voltage	V	Inst.	5th	○	–	–	○	–	–	○	–	①	
1	3B	21	1-N harmonic voltage	V	Inst.	7th	○	–	–	○	–	–	○	–	①	
1	3D	21	1-N harmonic voltage	V	Inst.	9th	○	–	–	○	–	–	○	–	①	
1	3F	21	1-N harmonic voltage	V	Inst.	11th	○	–	–	○	–	–	○	–	①	
1	41	21	1-N harmonic voltage	V	Inst.	13th	○	–	–	○	–	–	○	–	①	
1	43	21	1-N harmonic voltage	V	Inst.	15th	○	–	–	○(*4)	–	–	–	–	①	
1	45	21	1-N harmonic voltage	V	Inst.	17th	○	–	–	○(*4)	–	–	–	–	①	
1	47	21	1-N harmonic voltage	V	Inst.	19th	○	–	–	○(*4)	–	–	–	–	①	
1	49	21	1-N harmonic voltage	V	Inst.	21st	○	–	–	–	–	–	–	–	①	
1	7A	02	1-N harmonic voltage	V	Inst.	23rd	○	–	–	–	–	–	–	–	①	
1	7A	04	1-N harmonic voltage	V	Inst.	25th	○	–	–	–	–	–	–	–	①	
1	7A	06	1-N harmonic voltage	V	Inst.	27th	○	–	–	–	–	–	–	–	①	
1	7A	08	1-N harmonic voltage	V	Inst.	29th	○	–	–	–	–	–	–	–	①	
1	7A	0A	1-N harmonic voltage	V	Inst.	31st	○	–	–	–	–	–	–	–	①	
0	77	86	1-N voltage THD	%	Inst.	Total	○	–	–	○	–	–	○	–	①	
0	77	73	1-N voltage harmonic distortion	%	Inst.	3rd	○	–	–	○	–	–	○	–	①	
0	77	75	1-N voltage harmonic distortion	%	Inst.	5th	○	–	–	○	–	–	○	–	①	
0	77	77	1-N voltage harmonic distortion	%	Inst.	7th	○	–	–	○	–	–	○	–	①	
0	77	79	1-N voltage harmonic distortion	%	Inst.	9th	○	–	–	○	–	–	○	–	①	
0	77	7B	1-N voltage harmonic distortion	%	Inst.	11th	○	–	–	○	–	–	○	–	①	
0	77	7D	1-N voltage harmonic distortion	%	Inst.	13th	○	–	–	○	–	–	○	–	①	
1	77	7F	1-N voltage harmonic distortion	%	Inst.	15th	○	–	–	○(*4)	–	–	–	–	①	
1	77	81	1-N voltage harmonic distortion	%	Inst.	17th	○	–	–	○(*4)	–	–	–	–	①	
1	77	83	1-N voltage harmonic distortion	%	Inst.	19th	○	–	–	○(*4)	–	–	–	–	①	
1	77	85	1-N voltage harmonic distortion	%	Inst.	21st	○	–	–	–	–	–	–	–	①	
1	7A	72	1-N voltage harmonic distortion	%	Inst.	23rd	○	–	–	–	–	–	–	–	①	
1	7A	74	1-N voltage harmonic distortion	%	Inst.	25th	○	–	–	–	–	–	–	–	①	
1	7A	76	1-N voltage harmonic distortion	%	Inst.	27th	○	–	–	–	–	–	–	–	①	
1	7A	78	1-N voltage harmonic distortion	%	Inst.	29th	○	–	–	–	–	–	–	–	①	
1	7A	7A	1-N voltage harmonic distortion	%	Inst.	31st	○	–	–	–	–	–	–	–	①	
0	4B	41	2-N harmonic voltage	V	Inst.	Total	○	–	–	○	–	–	○	–	①	
0	35	41	2-N harmonic voltage	V	Inst.	1st	○	–	–	○	–	–	○	–	①	
1	37	41	2-N harmonic voltage	V	Inst.	3rd	○	–	–	○	–	–	○	–	①	
1	39	41	2-N harmonic voltage	V	Inst.	5th	○	–	–	○	–	–	○	–	①	
1	3B	41	2-N harmonic voltage	V	Inst.	7th	○	–	–	○	–	–	○	–	①	
1	3D	41	2-N harmonic voltage	V	Inst.	9th	○	–	–	○	–	–	○	–	①	
1	3F	41	2-N harmonic voltage	V	Inst.	11th	○	–	–	○	–	–	○	–	①	
1	41	41	2-N harmonic voltage	V	Inst.	13th	○	–	–	○	–	–	○	–	①	
1	43	41	2-N harmonic voltage	V	Inst.	15th	○	–	–	○(*4)	–	–	–	–	①	
1	45	41	2-N harmonic voltage	V	Inst.	17th	○	–	–	○(*4)	–	–	–	–	①	
1	47	41	2-N harmonic voltage	V	Inst.	19th	○	–	–	○(*4)	–	–	–	–	①	
1	49	41	2-N harmonic voltage	V	Inst.	21st	○	–	–	–	–	–	–	–	①	
1	7A	18	2-N harmonic voltage	V	Inst.	23rd	○	–	–	–	–	–	–	–	①	
1	7A	1A	2-N harmonic voltage	V	Inst.	25th	○	–	–	–	–	–	–	–	①	
1	7A	1C	2-N harmonic voltage	V	Inst.	27th	○	–	–	–	–	–	–	–	①	
1	7A	1E	2-N harmonic voltage	V	Inst.	29th	○	–	–	–	–	–	–	–	①	
1	7A	20	2-N harmonic voltage	V	Inst.	31st	○	–	–	–	–	–	–	–	①	

Table 7.7 Group Channel List (6/12)

Unit No.	Group (h)	Channel (h)	Name of Cannel				ME96SSH-MB ME96SSHA-MB ME96SSHB-MB			ME96SSR-MB ME96SSRA-MB ME96SSRB-MB			ME96NSR		Data type	Note
							3P4W	3P3W 1P3W	1P2W	3P4W	3P3W 1P3W	1P2W	3P4W	3P3W		
0	77	9C	2-N voltage THD	%	Inst.	Total	○	–	–	○	–	–	○	–	①	
0	77	89	2-N voltage harmonic distortion	%	Inst.	3rd	○	–	–	○	–	–	○	–	①	
0	77	8B	2-N voltage harmonic distortion	%	Inst.	5th	○	–	–	○	–	–	○	–	①	
0	77	8D	2-N voltage harmonic distortion	%	Inst.	7th	○	–	–	○	–	–	○	–	①	
0	77	8F	2-N voltage harmonic distortion	%	Inst.	9th	○	–	–	○	–	–	○	–	①	
0	77	91	2-N voltage harmonic distortion	%	Inst.	11th	○	–	–	○	–	–	○	–	①	
0	77	93	2-N voltage harmonic distortion	%	Inst.	13th	○	–	–	○	–	–	○	–	①	
1	77	95	2-N voltage harmonic distortion	%	Inst.	15th	○	–	–	○(*4)	–	–	–	–	①	
1	77	97	2-N voltage harmonic distortion	%	Inst.	17th	○	–	–	○(*4)	–	–	–	–	①	
1	77	99	2-N voltage harmonic distortion	%	Inst.	19th	○	–	–	○(*4)	–	–	–	–	①	
1	77	9B	2-N voltage harmonic distortion	%	Inst.	21st	○	–	–	–	–	–	–	–	①	
1	7A	88	2-N voltage harmonic distortion	%	Inst.	23rd	○	–	–	–	–	–	–	–	①	
1	7A	8A	2-N voltage harmonic distortion	%	Inst.	25th	○	–	–	–	–	–	–	–	①	
1	7A	8C	2-N voltage harmonic distortion	%	Inst.	27th	○	–	–	–	–	–	–	–	①	
1	7A	8E	2-N voltage harmonic distortion	%	Inst.	29th	○	–	–	–	–	–	–	–	①	
1	7A	90	2-N voltage harmonic distortion	%	Inst.	31st	○	–	–	–	–	–	–	–	①	
0	4B	61	3-N harmonic voltage	V	Inst.	Total	○	–	–	○	–	–	○	–	①	
0	35	61	3-N harmonic voltage	V	Inst.	1st	○	–	–	○	–	–	○	–	①	
1	37	61	3-N harmonic voltage	V	Inst.	3rd	○	–	–	○	–	–	○	–	①	
1	39	61	3-N harmonic voltage	V	Inst.	5th	○	–	–	○	–	–	○	–	①	
1	3B	61	3-N harmonic voltage	V	Inst.	7th	○	–	–	○	–	–	○	–	①	
1	3D	61	3-N harmonic voltage	V	Inst.	9th	○	–	–	○	–	–	○	–	①	
1	3F	61	3-N harmonic voltage	V	Inst.	11th	○	–	–	○	–	–	○	–	①	
1	41	61	3-N harmonic voltage	V	Inst.	13th	○	–	–	○	–	–	○	–	①	
1	43	61	3-N harmonic voltage	V	Inst.	15th	○	–	–	○(*4)	–	–	–	–	①	
1	45	61	3-N harmonic voltage	V	Inst.	17th	○	–	–	○(*4)	–	–	–	–	①	
1	47	61	3-N harmonic voltage	V	Inst.	19th	○	–	–	○(*4)	–	–	–	–	①	
1	49	61	3-N harmonic voltage	V	Inst.	21st	○	–	–	–	–	–	–	–	①	
1	7A	2E	3-N harmonic voltage	V	Inst.	23rd	○	–	–	–	–	–	–	–	①	
1	7A	30	3-N harmonic voltage	V	Inst.	25th	○	–	–	–	–	–	–	–	①	
1	7A	32	3-N harmonic voltage	V	Inst.	27th	○	–	–	–	–	–	–	–	①	
1	7A	34	3-N harmonic voltage	V	Inst.	29th	○	–	–	–	–	–	–	–	①	
1	7A	36	3-N harmonic voltage	V	Inst.	31st	○	–	–	–	–	–	–	–	①	
0	77	B2	3-N voltage THD	%	Inst.	Total	○	–	–	○	–	–	○	–	①	
0	77	9F	3-N voltage harmonic distortion	%	Inst.	3rd	○	–	–	○	–	–	○	–	①	
0	77	A1	3-N voltage harmonic distortion	%	Inst.	5th	○	–	–	○	–	–	○	–	①	
0	77	A3	3-N voltage harmonic distortion	%	Inst.	7th	○	–	–	○	–	–	○	–	①	
0	77	A5	3-N voltage harmonic distortion	%	Inst.	9th	○	–	–	○	–	–	○	–	①	
0	77	A7	3-N voltage harmonic distortion	%	Inst.	11th	○	–	–	○	–	–	○	–	①	
0	77	A9	3-N voltage harmonic distortion	%	Inst.	13th	○	–	–	○	–	–	○	–	①	
1	77	AB	3-N voltage harmonic distortion	%	Inst.	15th	○	–	–	○(*4)	–	–	–	–	①	
1	77	AD	3-N voltage harmonic distortion	%	Inst.	17th	○	–	–	○(*4)	–	–	–	–	①	
1	77	AF	3-N voltage harmonic distortion	%	Inst.	19th	○	–	–	○(*4)	–	–	–	–	①	
1	77	B1	3-N voltage harmonic distortion	%	Inst.	21st	○	–	–	–	–	–	–	–	①	
1	7A	9E	3-N voltage harmonic distortion	%	Inst.	23rd	○	–	–	–	–	–	–	–	①	
1	7A	A0	3-N voltage harmonic distortion	%	Inst.	25th	○	–	–	–	–	–	–	–	①	
1	7A	A2	3-N voltage harmonic distortion	%	Inst.	27th	○	–	–	–	–	–	–	–	①	
1	7A	A4	3-N voltage harmonic distortion	%	Inst.	29th	○	–	–	–	–	–	–	–	①	
1	7A	A6	3-N voltage harmonic distortion	%	Inst.	31st	○	–	–	–	–	–	–	–	①	

Table 7.8 Group Channel List (7/12)

Unit No.	Group (h)	Channel (h)	Name of Cannel				ME96SSH-MB ME96SSHA-MB ME96SSHB-MB			ME96SSR-MB ME96SSRA-MB ME96SSRB-MB			ME96NSR		Data type	Note
							3P4W	3P3W 1P3W	1P2W	3P4W	3P3W 1P3W	1P2W	3P4W	3P3W		
0	77	DE	L-N voltage THD	%	max.	Total	○	–	–	○	–	–	○	–	①	
0	35	A2	L-N harmonic voltage	V	max.	1st	○	–	–	○	–	–	○	–	①	
0	77	CB	L-N voltage harmonic distortion	%	max.	3rd	○	–	–	○	–	–	○	–	①	
0	77	CD	L-N voltage harmonic distortion	%	max.	5th	○	–	–	○	–	–	○	–	①	
0	77	CF	L-N voltage harmonic distortion	%	max.	7th	○	–	–	○	–	–	○	–	①	
0	77	D1	L-N voltage harmonic distortion	%	max.	9th	○	–	–	○	–	–	○	–	①	
0	77	D3	L-N voltage harmonic distortion	%	max.	11th	○	–	–	○	–	–	○	–	①	
0	77	D5	L-N voltage harmonic distortion	%	max.	13th	○	–	–	○	–	–	○	–	①	
1	77	D7	L-N voltage harmonic distortion	%	max.	15th	○	–	–	○(*4)	–	–	–	–	①	
1	77	D9	L-N voltage harmonic distortion	%	max.	17th	○	–	–	○(*4)	–	–	–	–	①	
1	77	DB	L-N voltage harmonic distortion	%	max.	19th	○	–	–	○(*4)	–	–	–	–	①	
1	77	DD	L-N voltage harmonic distortion	%	max.	21st	○	–	–	–	–	–	–	–	①	
1	7A	CA	L-N voltage harmonic distortion	%	max.	23rd	○	–	–	–	–	–	–	–	①	
1	7A	CC	L-N voltage harmonic distortion	%	max.	25th	○	–	–	–	–	–	–	–	①	
1	7A	CE	L-N voltage harmonic distortion	%	max.	27th	○	–	–	–	–	–	–	–	①	
1	7A	D0	L-N voltage harmonic distortion	%	max.	29th	○	–	–	–	–	–	–	–	①	
1	7A	D2	L-N voltage harmonic distortion	%	max.	31st	○	–	–	–	–	–	–	–	①	
0	33	21	Phase 1 harmonic current	A	Inst.	Total	○	○	○	○	○	○	○	○	①	
0	1D	21	Phase 1 harmonic current	A	Inst.	1st	○	○	○	○	○	○	○	○	①	
0	1F	21	Phase 1 harmonic current	A	Inst.	3rd	○	○	○	○	○	○	○	○	①	
0	21	21	Phase 1 harmonic current	A	Inst.	5th	○	○	○	○	○	○	○	○	①	
0	23	21	Phase 1 harmonic current	A	Inst.	7th	○	○	○	○	○	○	○	○	①	
0	25	21	Phase 1 harmonic current	A	Inst.	9th	○	○	○	○	○	○	○	○	①	
0	27	21	Phase 1 harmonic current	A	Inst.	11th	○	○	○	○	○	○	○	○	①	
0	29	21	Phase 1 harmonic current	A	Inst.	13th	○	○	○	○	○	○	○	○	①	
1	2B	21	Phase 1 harmonic current	A	Inst.	15th	○	○	○	○(*4)	○(*4)	○(*4)	–	–	①	
1	2D	21	Phase 1 harmonic current	A	Inst.	17th	○	○	○	○(*4)	○(*4)	○(*4)	–	–	①	
1	2F	21	Phase 1 harmonic current	A	Inst.	19th	○	○	○	○(*4)	○(*4)	○(*4)	–	–	①	
1	31	21	Phase 1 harmonic current	A	Inst.	21st	○	○	○	–	–	–	–	–	①	
1	78	02	Phase 1 harmonic current	A	Inst.	23rd	○	○	○	–	–	–	–	–	①	
1	78	04	Phase 1 harmonic current	A	Inst.	25th	○	○	○	–	–	–	–	–	①	
1	78	06	Phase 1 harmonic current	A	Inst.	27th	○	○	○	–	–	–	–	–	①	
1	78	08	Phase 1 harmonic current	A	Inst.	29th	○	○	○	–	–	–	–	–	①	
1	78	0A	Phase 1 harmonic current	A	Inst.	31st	○	○	○	–	–	–	–	–	①	
0	75	86	Phase 1 current THD	%	Inst.	Total	○	○	○	○	○	○	○	○	①	
1/0	75	73	Phase 1 current harmonic distortion	%	Inst.	3rd	○	○	○	○	○	○	○	○	①	*2
1/0	75	75	Phase 1 current harmonic distortion	%	Inst.	5th	○	○	○	○	○	○	○	○	①	*2
1/0	75	77	Phase 1 current harmonic distortion	%	Inst.	7th	○	○	○	○	○	○	○	○	①	*2
1/0	75	79	Phase 1 current harmonic distortion	%	Inst.	9th	○	○	○	○	○	○	○	○	①	*2
1/0	75	7B	Phase 1 current harmonic distortion	%	Inst.	11th	○	○	○	○	○	○	○	○	①	*2
1/0	75	7D	Phase 1 current harmonic distortion	%	Inst.	13th	○	○	○	○	○	○	○	○	①	*2
1	75	7F	Phase 1 current harmonic distortion	%	Inst.	15th	○	○	○	○(*4)	○(*4)	○(*4)	–	–	①	
1	75	81	Phase 1 current harmonic distortion	%	Inst.	17th	○	○	○	○(*4)	○(*4)	○(*4)	–	–	①	
1	75	83	Phase 1 current harmonic distortion	%	Inst.	19th	○	○	○	○(*4)	○(*4)	○(*4)	–	–	①	
1	75	85	Phase 1 current harmonic distortion	%	Inst.	21st	○	○	○	–	–	–	–	–	①	
1	78	72	Phase 1 current harmonic distortion	%	Inst.	23rd	○	○	○	–	–	–	–	–	①	
1	78	74	Phase 1 current harmonic distortion	%	Inst.	25th	○	○	○	–	–	–	–	–	①	
1	78	76	Phase 1 current harmonic distortion	%	Inst.	27th	○	○	○	–	–	–	–	–	①	
1	78	78	Phase 1 current harmonic distortion	%	Inst.	29th	○	○	○	–	–	–	–	–	①	
1	78	7A	Phase 1 current harmonic distortion	%	Inst.	31st	○	○	○	–	–	–	–	–	①	

Table 7.9 Group Channel List (8/12)

Unit No.	Group (h)	Channel (h)	Name of Cannel				ME96SSH-MB ME96SSHA-MB ME96SSHB-MB			ME96SSR-MB ME96SSRA-MB ME96SSRB-MB			ME96NSR		Data type	Note
							3P4W	3P3W 1P3W	1P2W	3P4W	3P3W 1P3W	1P2W	3P4W	3P3W		
0	33	41	Phase 2 harmonic current	A	Inst.	Total	○	△	–	○	△	–	○	○	①	*1
0	1D	41	Phase 2 harmonic current	A	Inst.	1st	○	△	–	○	△	–	○	○	①	*1
0	1F	41	Phase 2 harmonic current	A	Inst.	3rd	○	△	–	○	△	–	○	○	①	*1
0	21	41	Phase 2 harmonic current	A	Inst.	5th	○	△	–	○	△	–	○	○	①	*1
0	23	41	Phase 2 harmonic current	A	Inst.	7th	○	△	–	○	△	–	○	○	①	*1
0	25	41	Phase 2 harmonic current	A	Inst.	9th	○	△	–	○	△	–	○	○	①	*1
0	27	41	Phase 2 harmonic current	A	Inst.	11th	○	△	–	○	△	–	○	○	①	*1
0	29	41	Phase 2 harmonic current	A	Inst.	13th	○	△	–	○	△	–	○	○	①	*1
1	2B	41	Phase 2 harmonic current	A	Inst.	15th	○	△	–	○(*4)	△(*4)	–	–	–	①	*1
1	2D	41	Phase 2 harmonic current	A	Inst.	17th	○	△	–	○(*4)	△(*4)	–	–	–	①	*1
1	2F	41	Phase 2 harmonic current	A	Inst.	19th	○	△	–	○(*4)	△(*4)	–	–	–	①	*1
1	31	41	Phase 2 harmonic current	A	Inst.	21st	○	△	–	–	–	–	–	–	①	*1
1	78	18	Phase 2 harmonic current	A	Inst.	23rd	○	△	–	–	–	–	–	–	①	*1
1	78	1A	Phase 2 harmonic current	A	Inst.	25th	○	△	–	–	–	–	–	–	①	*1
1	78	1C	Phase 2 harmonic current	A	Inst.	27th	○	△	–	–	–	–	–	–	①	*1
1	78	1E	Phase 2 harmonic current	A	Inst.	29th	○	△	–	–	–	–	–	–	①	*1
1	78	20	Phase 2 harmonic current	A	Inst.	31st	○	△	–	–	–	–	–	–	①	*1
0	75	9C	Phase 2 current THD	%	Inst.	Total	○	△	–	○	△	–	○	○	①	*1
1/0	75	89	Phase 2 current harmonic distortion	%	Inst.	3rd	○	△	–	○	△	–	○	○	①	*1,*2
1/0	75	8B	Phase 2 current harmonic distortion	%	Inst.	5th	○	△	–	○	△	–	○	○	①	*1,*2
1/0	75	8D	Phase 2 current harmonic distortion	%	Inst.	7th	○	△	–	○	△	–	○	○	①	*1,*2
1/0	75	8F	Phase 2 current harmonic distortion	%	Inst.	9th	○	△	–	○	△	–	○	○	①	*1,*2
1/0	75	91	Phase 2 current harmonic distortion	%	Inst.	11th	○	△	–	○	△	–	○	○	①	*1,*2
1/0	75	93	Phase 2 current harmonic distortion	%	Inst.	13th	○	△	–	○	△	–	○	○	①	*1,*2
1	75	95	Phase 2 current harmonic distortion	%	Inst.	15th	○	△	–	○(*4)	△(*4)	–	–	–	①	*1
1	75	97	Phase 2 current harmonic distortion	%	Inst.	17th	○	△	–	○(*4)	△(*4)	–	–	–	①	*1
1	75	99	Phase 2 current harmonic distortion	%	Inst.	19th	○	△	–	○(*4)	△(*4)	–	–	–	①	*1
1	75	9B	Phase 2 current harmonic distortion	%	Inst.	21st	○	△	–	–	–	–	–	–	①	*1
1	78	88	Phase 2 current harmonic distortion	%	Inst.	23rd	○	△	–	–	–	–	–	–	①	*1
1	78	8A	Phase 2 current harmonic distortion	%	Inst.	25th	○	△	–	–	–	–	–	–	①	*1
1	78	8C	Phase 2 current harmonic distortion	%	Inst.	27th	○	△	–	–	–	–	–	–	①	*1
1	78	8E	Phase 2 current harmonic distortion	%	Inst.	29th	○	△	–	–	–	–	–	–	①	*1
1	78	90	Phase 2 current harmonic distortion	%	Inst.	31st	○	△	–	–	–	–	–	–	①	*1
0	33	61	Phase 3 harmonic current	A	Inst.	Total	○	○	–	○	○	–	○	○	①	
0	1D	61	Phase 3 harmonic current	A	Inst.	1st	○	○	–	○	○	–	○	○	①	
0	1F	61	Phase 3 harmonic current	A	Inst.	3rd	○	○	–	○	○	–	○	○	①	
0	21	61	Phase 3 harmonic current	A	Inst.	5th	○	○	–	○	○	–	○	○	①	
0	23	61	Phase 3 harmonic current	A	Inst.	7th	○	○	–	○	○	–	○	○	①	
0	25	61	Phase 3 harmonic current	A	Inst.	9th	○	○	–	○	○	–	○	○	①	
0	27	61	Phase 3 harmonic current	A	Inst.	11th	○	○	–	○	○	–	○	○	①	
0	29	61	Phase 3 harmonic current	A	Inst.	13th	○	○	–	○	○	–	○	○	①	
1	2B	61	Phase 3 harmonic current	A	Inst.	15th	○	○	–	○(*4)	○(*4)	–	–	–	①	
1	2D	61	Phase 3 harmonic current	A	Inst.	17th	○	○	–	○(*4)	○(*4)	–	–	–	①	
1	2F	61	Phase 3 harmonic current	A	Inst.	19th	○	○	–	○(*4)	○(*4)	–	–	–	①	
1	31	61	Phase 3 harmonic current	A	Inst.	21st	○	○	–	–	–	–	–	–	①	
1	78	2E	Phase 3 harmonic current	A	Inst.	23rd	○	○	–	–	–	–	–	–	①	
1	78	30	Phase 3 harmonic current	A	Inst.	25th	○	○	–	–	–	–	–	–	①	
1	78	32	Phase 3 harmonic current	A	Inst.	27th	○	○	–	–	–	–	–	–	①	
1	78	34	Phase 3 harmonic current	A	Inst.	29th	○	○	–	–	–	–	–	–	①	
1	78	36	Phase 3 harmonic current	A	Inst.	31st	○	○	–	–	–	–	–	–	①	

Table 7.10 Group Channel List (9/12)

Unit No.	Group (h)	Channel (h)	Name of Cannel				ME96SSH-MB ME96SSHA-MB ME96SSHB-MB			ME96SSR-MB ME96SSRA-MB ME96SSRB-MB			ME96NSR		Data type	Note
							3P4W	3P3W 1P3W	1P2W	3P4W	3P3W 1P3W	1P2W	3P4W	3P3W		
0	75	B2	Phase 3 current THD	%	Inst.	Total	○	○	–	○	○	–	○	○	①	
1/0	75	9F	Phase 3 current harmonic distortion	%	Inst.	3rd	○	○	–	○	○	–	○	○	①	*2
1/0	75	A1	Phase 3 current harmonic distortion	%	Inst.	5th	○	○	–	○	○	–	○	○	①	*2
1/0	75	A3	Phase 3 current harmonic distortion	%	Inst.	7th	○	○	–	○	○	–	○	○	①	*2
1/0	75	A5	Phase 3 current harmonic distortion	%	Inst.	9th	○	○	–	○	○	–	○	○	①	*2
1/0	75	A7	Phase 3 current harmonic distortion	%	Inst.	11th	○	○	–	○	○	–	○	○	①	*2
1/0	75	A9	Phase 3 current harmonic distortion	%	Inst.	13th	○	○	–	○	○	–	○	○	①	*2
1	75	AB	Phase 3 current harmonic distortion	%	Inst.	15th	○	○	–	○(*4)	○(*4)	–	–	–	①	
1	75	AD	Phase 3 current harmonic distortion	%	Inst.	17th	○	○	–	○(*4)	○(*4)	–	–	–	①	
1	75	AF	Phase 3 current harmonic distortion	%	Inst.	19th	○	○	–	○(*4)	○(*4)	–	–	–	①	
1	75	B1	Phase 3 current harmonic distortion	%	Inst.	21st	○	○	–	–	–	–	–	–	①	
1	78	9E	Phase 3 current harmonic distortion	%	Inst.	23rd	○	○	–	–	–	–	–	–	①	
1	78	A0	Phase 3 current harmonic distortion	%	Inst.	25th	○	○	–	–	–	–	–	–	①	
1	78	A2	Phase 3 current harmonic distortion	%	Inst.	27th	○	○	–	–	–	–	–	–	①	
1	78	A4	Phase 3 current harmonic distortion	%	Inst.	29th	○	○	–	–	–	–	–	–	①	
1	78	A6	Phase 3 current harmonic distortion	%	Inst.	31st	○	○	–	–	–	–	–	–	①	
0	33	81	Phase N harmonic current	A	Inst.	Total	○	–	–	○	–	–	○	–	①	
0	1D	81	Phase N harmonic current	A	Inst.	1st	○	–	–	○	–	–	○	–	①	
0	1F	81	Phase N harmonic current	A	Inst.	3rd	○	–	–	○	–	–	○	–	①	
0	21	81	Phase N harmonic current	A	Inst.	5th	○	–	–	○	–	–	○	–	①	
0	23	81	Phase N harmonic current	A	Inst.	7th	○	–	–	○	–	–	○	–	①	
0	25	81	Phase N harmonic current	A	Inst.	9th	○	–	–	○	–	–	○	–	①	
0	27	81	Phase N harmonic current	A	Inst.	11th	○	–	–	○	–	–	○	–	①	
0	29	81	Phase N harmonic current	A	Inst.	13th	○	–	–	○	–	–	○	–	①	
1	2B	81	Phase N harmonic current	A	Inst.	15th	○	–	–	○(*4)	–	–	–	–	①	
1	2D	81	Phase N harmonic current	A	Inst.	17th	○	–	–	○(*4)	–	–	–	–	①	
1	2F	81	Phase N harmonic current	A	Inst.	19th	○	–	–	○(*4)	–	–	–	–	①	
1	31	81	Phase N harmonic current	A	Inst.	21st	○	–	–	–	–	–	–	–	①	
1	78	44	Phase N harmonic current	A	Inst.	23rd	○	–	–	–	–	–	–	–	①	
1	78	46	Phase N harmonic current	A	Inst.	25th	○	–	–	–	–	–	–	–	①	
1	78	48	Phase N harmonic current	A	Inst.	27th	○	–	–	–	–	–	–	–	①	
1	78	4A	Phase N harmonic current	A	Inst.	29th	○	–	–	–	–	–	–	–	①	
1	78	4C	Phase N harmonic current	A	Inst.	31st	○	–	–	–	–	–	–	–	①	
1	33	82	Phase N current THD	A	max.	Total	○	–	–	○	–	–	○	–	①	
1	1D	82	Phase N current harmonic distortion	A	max.	1st	○	–	–	○	–	–	○	–	①	
1	1F	82	Phase N current harmonic distortion	A	max.	3rd	○	–	–	○	–	–	○	–	①	
1	21	82	Phase N current harmonic distortion	A	max.	5th	○	–	–	○	–	–	○	–	①	
1	23	82	Phase N current harmonic distortion	A	max.	7th	○	–	–	○	–	–	○	–	①	
1	25	82	Phase N current harmonic distortion	A	max.	9th	○	–	–	○	–	–	○	–	①	
1	27	82	Phase N current harmonic distortion	A	max.	11th	○	–	–	○	–	–	○	–	①	
1	29	82	Phase N current harmonic distortion	A	max.	13th	○	–	–	○	–	–	○	–	①	
1	2B	82	Phase N current harmonic distortion	A	max.	15th	○	–	–	○(*4)	–	–	–	–	①	
1	2D	82	Phase N current harmonic distortion	A	max.	17th	○	–	–	○(*4)	–	–	–	–	①	
1	2F	82	Phase N current harmonic distortion	A	max.	19th	○	–	–	○(*4)	–	–	–	–	①	
1	31	82	Phase N current harmonic distortion	A	max.	21st	○	–	–	–	–	–	–	–	①	
1	7B	44	Phase N current harmonic distortion	A	max.	23rd	○	–	–	–	–	–	–	–	①	
1	7B	46	Phase N current harmonic distortion	A	max.	25th	○	–	–	–	–	–	–	–	①	
1	7B	48	Phase N current harmonic distortion	A	max.	27th	○	–	–	–	–	–	–	–	①	
1	7B	4A	Phase N current harmonic distortion	A	max.	29th	○	–	–	–	–	–	–	–	①	
1	7B	4C	Phase N current harmonic distortion	A	max.	31st	○	–	–	–	–	–	–	–	①	

Table 7.11 Group Channel List (10/12)

Unit No.	Group (h)	Channel (h)	Name of Cannel				ME96SSH-MB ME96SSHA-MB ME96SSHB-MB			ME96SSR-MB ME96SSRA-MB ME96SSRB-MB			ME96NSR		Data type	Note
							3P4W	3P3W 1P3W	1P2W	3P4W	3P3W 1P3W	1P2W	3P4W	3P3W		
0	33	A2	Harmonic current	A	max.	Total	○	○	○	○	○	○	○	○	①	
0	1D	A2	Harmonic current	A	max.	1st	○	○	○	○	○	○	○	○	①	*2
0	1F	A2	Harmonic current	A	max.	3rd	○	○	○	○	○	○	○	○	①	*2
0	21	A2	Harmonic current	A	max.	5th	○	○	○	○	○	○	○	○	①	*2
0	23	A2	Harmonic current	A	max.	7th	○	○	○	○	○	○	○	○	①	*2
0	25	A2	Harmonic current	A	max.	9th	○	○	○	○	○	○	○	○	①	*2
0	27	A2	Harmonic current	A	max.	11th	○	○	○	○	○	○	○	○	①	*2
0	29	A2	Harmonic current	A	max.	13th	○	○	○	○	○	○	○	○	①	
1	2B	A2	Harmonic current	A	max.	15th	○	○	○	○(*4)	○(*4)	○(*4)	–	–	①	
1	2D	A2	Harmonic current	A	max.	17th	○	○	○	○(*4)	○(*4)	○(*4)	–	–	①	
1	2F	A2	Harmonic current	A	max.	19th	○	○	○	○(*4)	○(*4)	○(*4)	–	–	①	
1	31	A2	Harmonic current	A	max.	21st	○	○	○	–	–	–	–	–	①	
1	78	5A	Harmonic current	A	max.	23rd	○	○	○	–	–	–	–	–	①	
1	78	5C	Harmonic current	A	max.	25th	○	○	○	–	–	–	–	–	①	
1	78	5E	Harmonic current	A	max.	27th	○	○	○	–	–	–	–	–	①	
1	78	60	Harmonic current	A	max.	29th	○	○	○	–	–	–	–	–	①	
1	78	62	Harmonic current	A	max.	31st	○	○	○	–	–	–	–	–	①	
1	01	1E	Current unbalance	%	Inst.		○(*5)	○(*5)	–	○(*5)	○(*5)	–	–	–	①	
1	01	24	Current unbalance	%	max.		○(*5)	○(*5)	–	○(*5)	○(*5)	–	–	–	①	
1	03	1E	Voltage unbalance	%	Inst.		○(*5)	○(*5)	–	○(*5)	○(*5)	–	–	–	①	
1	03	24	Voltage unbalance	%	max.		○(*5)	○(*5)	–	○(*5)	○(*5)	–	–	–	①	

Table 7.12 Group Channel List (11/12)

Unit No.	Group (h)	Channel (h)	Name of Cannel				ME96SSH-MB ME96SSHA-MB ME96SSHB-MB			ME96SSR-MB ME96SSRA-MB ME96SSRB-MB			ME96NSR		Data type	Note
							3P4W	3P3W 1P3W	1P2W	3P4W	3P3W 1P3W	1P2W	3P4W	3P3W		
0	80	01	Active energy import	kWh	count		○	○	○	○	○	○	○	○	②	*3
0	80	63	Active energy export	kWh	count		○	○	○	○	○	○	○	○	②	*3
0	80	64	Active energy import	kWh	count	expand	○	○	○	○	○	○	○	○	②	*3
0	80	65	Active energy export	kWh	count	expand	○	○	○	○	○	○	○	○	②	*3
0	81	01	Reactive energy import lag	kvarh	count		○	○	○	○	○	○	○	○	②	*3
0	81	63	Reactive energy export lag	kvarh	count		○	○	○	○	○	○	○	○	②	*3
0	81	64	Reactive energy import lead	kvarh	count		○	○	○	○	○	○	○	○	②	*3
0	81	65	Reactive energy export lead	kvarh	count		○	○	○	○	○	○	○	○	②	*3
0	81	66	Reactive energy import lag	kvarh	count	expand	○	○	○	○	○	○	○	○	②	*3
0	81	67	Reactive energy export lag	kvarh	count	expand	○	○	○	○	○	○	○	○	②	*3
0	81	68	Reactive energy import lead	kvarh	count	expand	○	○	○	○	○	○	○	○	②	*3
0	81	69	Reactive energy export lead	kvarh	count	expand	○	○	○	○	○	○	○	○	②	*3
0	82	01	Apparent energy	kVAh	count		○	○(*4)	○(*4)	○(*4)	○(*4)	○(*4)	–	–	②	*3
0	8B	01	Periodic active energy(Period 1)	kWh	count		○	○	○	○	○	○	–	–	②	*3
0	8C	01	Periodic active energy(Period 2)	kWh	count		○	○	○	○	○	○	–	–	②	*3
1	92	01	Periodic active energy(Period 3)	kWh	count		○(*5)	○(*5)	○(*5)	○(*5)	○(*5)	○(*5)	–	–	②	*3
0	87	01	Operating time1	h	count		○	○	○	○	○	○	–	–	②	
0	88	01	Operating time2	h	count		○	○	○	○	○	○	–	–	②	
0	80	6A	CO2 equivalent	kg	count		○(*5)	○(*5)	○(*5)	○(*5)	○(*5)	○(*5)	–	–	②	*8
1	B0	01	Active energy import	Wh	count	unit fixed	○	○	○	○	○	○	–	–	③	*3
1	B0	04	Active energy export	Wh	count	unit fixed	○	○	○	○	○	○	–	–	③	*3
1	B0	07	Reactive energy import lag	varh	count	unit fixed	○	○	○	○	○	○	–	–	③	*3
1	B0	0A	Reactive energy export lag	varh	count	unit fixed	○	○	○	○	○	○	–	–	③	*3
1	B0	0D	Reactive energy import lead	varh	count	unit fixed	○	○	○	○	○	○	–	–	③	*3
1	B0	10	Reactive energy export lead	varh	count	unit fixed	○	○	○	○	○	○	–	–	③	*3
1	B0	13	Apparent energy	VAh	count	unit fixed	○	○(*4)	○(*4)	○(*4)	○(*4)	○(*4)	–	–	③	*3
1	B0	16	Periodic active energy(Period 1)	Wh	count	unit fixed	○	○	○	○	○	○	–	–	③	*3
1	B0	19	Periodic active energy(Period 2)	Wh	count	unit fixed	○	○	○	○	○	○	–	–	③	*3
1	B0	1C	Periodic active energy(Period 3)	Wh	count	unit fixed	○(*5)	○(*5)	○(*5)	○(*5)	○(*5)	○(*5)	–	–	②	*3
1	B0	02	Active energy import	kWh	count	unit fixed	○	○	○	○	○	○	–	–	③	*3
1	B0	05	Active energy export	kWh	count	unit fixed	○	○	○	○	○	○	–	–	③	*3
1	B0	08	Reactive energy import lag	kvarh	count	unit fixed	○	○	○	○	○	○	–	–	③	*3
1	B0	0B	Reactive energy export lag	kvarh	count	unit fixed	○	○	○	○	○	○	–	–	③	*3
1	B0	0E	Reactive energy import lead	kvarh	count	unit fixed	○	○	○	○	○	○	–	–	③	*3
1	B0	11	Reactive energy export lead	kvarh	count	unit fixed	○	○	○	○	○	○	–	–	③	*3
1	B0	14	Apparent energy	kVAh	count	unit fixed	○	○(*4)	○(*4)	○(*4)	○(*4)	○(*4)	–	–	③	*3
1	B0	17	Periodic active energy(Period 1)	kWh	count	unit fixed	○	○	○	○	○	○	–	–	③	*3
1	B0	1A	Periodic active energy(Period 2)	kWh	count	unit fixed	○	○	○	○	○	○	–	–	③	*3
1	B0	1D	Periodic active energy(Period 3)	kWh	count	unit fixed	○(*5)	○(*5)	○(*5)	○(*5)	○(*5)	○(*5)	–	–	②	*3
1	B0	03	Active energy import	MWh	count	unit fixed	○	○	○	○	○	○	–	–	③	*3
1	B0	06	Active energy export	MWh	count	unit fixed	○	○	○	○	○	○	–	–	③	*3
1	B0	09	Reactive energy import lag	Mvarh	count	unit fixed	○	○	○	○	○	○	–	–	③	*3
1	B0	0C	Reactive energy export lag	Mvarh	count	unit fixed	○	○	○	○	○	○	–	–	③	*3
1	B0	0F	Reactive energy import lead	Mvarh	count	unit fixed	○	○	○	○	○	○	–	–	③	*3
1	B0	12	Reactive energy export lead	Mvarh	count	unit fixed	○	○	○	○	○	○	–	–	③	*3
1	B0	15	Apparent energy	MVAh	count	unit fixed	○	○(*4)	○(*4)	○(*4)	○(*4)	○(*4)	–	–	③	*3
1	B0	18	Periodic active energy(Period 1)	MWh	count	unit fixed	○	○	○	○	○	○	–	–	③	*3
1	B0	1B	Periodic active energy(Period 2)	MWh	count	unit fixed	○	○	○	○	○	○	–	–	③	*3
1	B0	1E	Periodic active energy(Period 3)	MWh	count	unit fixed	○(*5)	○(*5)	○(*5)	○(*5)	○(*5)	○(*5)	–	–	②	*3

Table 7.13 Group Channel List (12/12)

Unit No.	Group (h)	Channel (h)	Name of Cannel				ME96SSH-MB ME96SSHA-MB ME96SSHB-MB			ME96SSR-MB ME96SSRA-MB ME96SSRB-MB			ME96NSR		Data type	Note
							3P4W	3P3W 1P3W	1P2W	3P4W	3P3W 1P3W	1P2W	3P4W	3P3W		
0	01	14	Current upper limit	A	Alarm		○	○	○	○	○	○	○	○	①	
0	01	15	Current lower limit	A	Alarm		○	○	○	○	○	○	○	○	①	
0	01	94	Current upper limit	A	Alarm	PhaseN	○	–	–	○	–	–	○	–	①	
0	02	14	Current demand upper limit	A	Alarm		○	○	○	○	○	○	○	○	①	
0	02	15	Current demand lower limit	A	Alarm		○	○	○	○	○	○	○	○	①	
0	02	94	Current demand upper limit	A	Alarm	PhaseN	○	–	–	○	–	–	○	–	①	
0	05	14	Voltage upper limit(L-L)	V	Alarm		○	○	○	○	○	○	○	○	①	
0	05	15	Voltage lower limit(L-L)	V	Alarm		○	○	○	○	○	○	○	○	①	
0	03	14	Voltage upper limit(L-N)	V	Alarm		○	○	○	○	○	○	○	○	①	
0	03	15	Voltage lower limit(L-N)	V	Alarm		○	○	○	○	○	○	○	○	①	
0	07	14	Active power upper limit	kW	Alarm		○	○	○	○	○	○	○	○	①	
0	07	15	Active power lower limit	kW	Alarm		○	○	○	○	○	○	○	○	①	
0	08	14	Rolling demand(kW) upper limit	kW	Alarm	Last	○	○	○	○(*4)	○(*4)	○(*4)	–	–	①	*7
2	08	22	Rolling demand(kW) upper limit	kW	Alarm	Present	○(*5)	○(*5)	○(*5)	○(*5)	○(*5)	○(*5)	–	–	①	
2	08	23	Rolling demand(kW) upper limit	kW	Alarm	Predict	○(*5)	○(*5)	○(*5)	○(*5)	○(*5)	○(*5)	–	–	①	
0	09	14	Reactive power upper limit	kvar	Alarm		○	○	○	○	○	○	○	○	①	
0	09	15	Reactive power lower limit	kvar	Alarm		○	○	○	○	○	○	○	○	①	
0	0A	14	Rolling demand(kvar) upper limit	kvar	Alarm	Last	○(*4)	○(*4)	○(*4)	○(*4)	○(*4)	○(*4)	–	–	①	*7
2	0A	22	Rolling demand(kvar) upper limit	kvar	Alarm	Present	○(*5)	○(*5)	○(*5)	○(*5)	○(*5)	○(*5)	–	–	①	
2	0A	23	Rolling demand(kvar) upper limit	kvar	Alarm	Predict	○(*5)	○(*5)	○(*5)	○(*5)	○(*5)	○(*5)	–	–	①	
0	0C	14	Rolling demand(kVA) upper limit	kVA	Alarm	Last	○(*4)	○(*4)	○(*4)	○(*4)	○(*4)	○(*4)	–	–	①	*7
2	0C	22	Rolling demand(kVA) upper limit	kVA	Alarm	Present	○(*5)	○(*5)	○(*5)	○(*5)	○(*5)	○(*5)	–	–	①	
2	0C	23	Rolling demand(kVA) upper limit	kVA	Alarm	Predict	○(*5)	○(*5)	○(*5)	○(*5)	○(*5)	○(*5)	–	–	①	
0	0D	14	Power factor upper limit	%	Alarm		○	○	○	○	○	○	○	○	①	
0	0D	15	Power factor lower limit	%	Alarm		○	○	○	○	○	○	○	○	①	
0	0F	14	Frequency upper limit	Hz	Alarm		○	○	○	○	○	○	○	○	①	
0	0F	15	Frequency lower limit	Hz	Alarm		○	○	○	○	○	○	○	○	①	
0	77	E1	H.V(L-N) upper limit	%	Alarm	Total	○	○	○	○	○	○	○	○	①	
0	76	E1	H.V(L-L) upper limit	%	Alarm	Total	○	○	○	○	○	○	○	○	①	
0	75	E1	H.A upper limit	A	Alarm	Total	○	○	○	○	○	○	○	○	①	
0	75	F1	H.A upper limit(Phase N)	A	Alarm	Total	○	–	–	○	–	–	○	–	①	
1	01	25	Current unbalance limit	%			○(*5)	○(*5)	–	○(*5)	○(*5)	–	–	–	①	
1	03	25	Voltage unbalance limit	%			○(*5)	○(*5)	–	○(*5)	○(*5)	–	–	–	①	
0	80	E4	CO2 equivalent rate				○(*5)	○(*5)	○(*5)	○(*5)	○(*5)	○(*5)	–	–	①	
0	A0	31	Alarm state1		Alarm		○	○	○	○	○	○	○	○	④	
0	A0	35	Alarm state2		Alarm		○	○	○	○	○	○	○	○	④	
0	A0	34	Alarm state3		Alarm		○(*5)	○(*5)	○(*5)	○(*5)	○(*5)	○(*5)	–	–	④	

Inst.: Instantaneous value, max.: maximum value, min.: minimum value.

(Refer to next page for notes.)

*1: △ in the table means that it is applicable when the setting of phase wiring is 3P3W_3CT only.

*2: Unit number is “0” when the setting of phase wiring is 1P2W, 1P3W or 3P3W.

*3: About the reply data of active energy(Wh), reactive energy(varh) and apparent energy(VAh), refer to follows.

Example) In case of active energy(import) data is 876,543,210,987,654,321mWh, each reply data are follows.

					GWh				MWh				kWh				Wh			mWh		
				Data=	8	7	6	5	4	3	2	1	0	9	8	7	6	5	4	3	2	1	
Unit No.	Group (h)	Channel (h)	Name of Cannel	Total power[kW]																			Note
0	80	01	Active energy import	less than 10									0	9	8	7	6	5					note1
				10 or more and less than 100								1	0	9	8	7	6						
				100 or more and less than 1000							2	1	0	9	8	7							
				1000 or more and less than 10000						3	2	1	0	9	8								
				10000 or more and less than 100000					4	3	2	1	0	9									
				100000 or more				5	4	3	2	1	0										
0	80	64	Active energy import (expand)	less than 10												7	6	5	4	3	2		
				10 or more and less than 100											8	7	6	5	4	3			
				100 or more and less than 1000										9	8	7	6	5	4				
				1000 or more and less than 10000									0	9	8	7	6	5					
				10000 or more and less than 100000								1	0	9	8	7	6						
				100000 or more							2	1	0	9	8	7							
1	B0	01	Active energy import (unit fixed: Wh)	-							2	1	0	9	8	7	6	5	4				note2
1	B0	02	Active energy import (unit fixed: kWh)	-				5	4	3	2	1	0	9	8	7							
1	B0	03	Active energy import (unit fixed: MWh)	-	8	7	6	5	4	3	2	1	0										

note1: The data of energy will change according to the total load setting of ME96. (This matches to display of ME96NSR.) Multiplying the receiving data by the multiplying factor of section 7.2.4 gives the actual value (unit:kWh).

note2: The data of energy of selected unit will reply regardless to the total load setting of ME96. (This matches to the additional display (9 digits) of ME96SSH/ME96SSR/ME96SSHA/ME96SSRA/ME96SSHB/ME96SSRB.

*4: Applicable only when ME96SSHA-MB/ME96SSRA-MB/ME96SSHB-MB/ME96SSRB-MB.

*5: Applicable only when ME96SSHB-MB/ME96SSRB-MB.

*6: Not applicable only when ME96SSHB-MB/ME96SSRB-MB.

*7: “Last” means the rolling demand value of the latest interval time completed.

*8: About the reply data of CO2 equivalent, refer to follows.

										kg			g	
		Data=	2	3	4	5	6	7	8	9	0	1	2	
Item	Total power [kW]													Note
CO2 equivalent (Reply data)	less than 10							7	8	9	0	1	2		note1
	10 or more and less than 100						6	7	8	9	0	1			
	100 or more and less than 1000					5	6	7	8	9	0				
	1000 or more and less than 10000				4	5	6	7	8	9					
	10000 or more and less than 100000			3	4	5	6	7	8						
	100000 or more		2	3	4	5	6	7							
CO2 equivalent (LCD display)	less than 10							7	8	9	0.	1	2		Unit:kg
	10 or more and less than 100						6	7	8	9	0.	1			
	100 or more and less than 1000					5	6	7	8	9	0				
	1000 or more and less than 10000				4	5	6	7	8	9	0.	1	2		
	10000 or more and less than 100000			3	4	5	6	7	8	9	0.	1			
	100000 or more		2	3	4	5	6	7	8	9	0				

note1: The data will change according to the total load setting of ME96. Multiplying the receiving data by the multiplying factor of section 7.2.4 gives the actual value (unit:kg).

(2) Data Set Command (2H)

2H	Data Set

- After writing the command as shown below into the remote register RWwm, set the command execution request flag to ON (1). When the command completion reply flag is turned on, the specified item is set.
- The details of the data written into the remote resister RWw are shown in the section 7.2.3.

※After writing the setting value, about 2 seconds (max 4 seconds) is needed to restart the measurement based on new set-up value.

Remote register RWw（Programmable controller→ME96）

	b15 b8	b7 b4	b3 b0
m	Group No.	0H (Unit.No)	2H (Command) *1
m+1	Index number	Channel No.	
m+2	Low data		
m+3	High data		

Remote register RWr（ME96→Programmable controller）

	b15 b8	b7 b0
n	Channel No.	Group No.
n+1	00H	00H
n+2	00H	00H
n+3	00H	00H

* When error occurs, refer to 7.2.5 About Error Occurrence.

m, n : Address is allocated to the master module by the station number setting.

*1: It is described as 8 bits data by combining the unit No. (high 4 bits) and the command (low 4 bits).

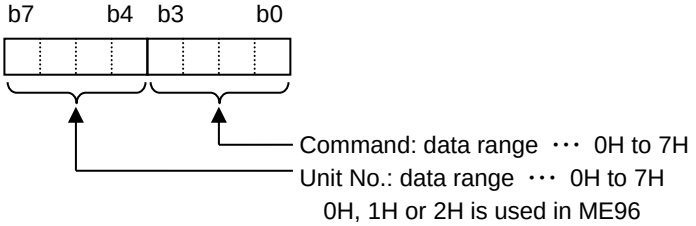

For example, when the unit No. is 0H and the command is 2H, it becomes “02H”.

Table 7.14 List of Group and Channel for Setting

Unit No.	Group (h)	Channel (h)	Name of Cannel	Setting range	ME96SSH-MB ME96SSHA-MB ME96SSHB-MB			ME96SSR-MB ME96SSRA-MB ME96SSRB-MB			ME96NSR		Data type	Note
					3P4W	3P3W 1P3W	1P2W	3P4W	3P3W 1P3W	1P2W	3P4W	3P3W		
0	E0	11	Primary current	1.0A to 30000.0A	○	○	○	○	○	○	○	○	⑤	*1
0	E0	12	Primary voltage(L-L)	60V to 750000V	- (*11)	○	○	- (*11)	○	○	○	○	⑤	*2
0	E0	1B	Primary voltage(L-N)	60V to 750000V	○	–	–	○	–	–	○	–	⑤	*3
0	E0	1C	Secondary voltage	(Refer to *4)	○	○	○	○	○	○	○	○	⑤	*4
0	E0	13	Phase wiring	Refer to data type ⑥	○	○	○	○	○	○	○	○	⑥	
0	E0	1D	Frequency	50Hz, 60Hz	○	○	○	○	○	○	–	–	⑤	
0	E0	1E	Secondary current	5A, 1A	○	○	○	○	○	○	–	–	⑤	
0	E0	18	Alarm items	Refer to data type ⑦	○	○	○	○	○	○	○	○	⑦	
0	02	E0	Time constant for current demand	0 to 1800 sec.	○	○	○	○	○	○	○	○	⑥	*5
0	08	E4	Interval time constant	1 to 60 min	○	○	○	○(*9)	○(*9)	○(*9)	–	–	⑥	*6
0	08	E5	Subinterval time constant	1 to 60 min	○	○	○	○(*9)	○(*9)	○(*9)	–	–	⑥	*6
0	80	01	Active energy import	0 to 999999 x Multiplying	○	○	○	○	○	○	○	○	②	*7
0	80	63	Active energy export	0 to 999999 x Multiplying	○	○	○	○	○	○	○	○	②	*7
0	81	01	Reactive energy import lag	0 to 999999 x Multiplying	○	○	○	○	○	○	○	○	②	*7
0	81	63	Reactive energy export lag	0 to 999999 x Multiplying	○	○	○	○	○	○	○	○	②	*7
0	81	64	Reactive energy import lead	0 to 999999 x Multiplying	○	○	○	○	○	○	○	○	②	*7
0	81	65	Reactive energy export lead	0 to 999999 x Multiplying	○	○	○	○	○	○	○	○	②	*7
0	82	01	Apparent energy	0 to 999999 x Multiplying	○	○(*9)	○(*9)	○(*9)	○(*9)	○(*9)	–	–	②	*7
0	8B	01	Periodic active energy(Period 1)	0 to 999999 x Multiplying	○	○	○	○	○	○	–	–	②	*7
0	8C	01	Periodic active energy(Period 2)	0 to 999999 x Multiplying	○	○	○	○	○	○	–	–	②	*7
1	92	01	Periodic active energy(Period 3)	0 to 999999 x Multiplying	○(*10)	○(*10)	○(*10)	○(*10)	○(*10)	○(*10)	–	–	②	*7
0	01	14	Current upper limit	5 to 120% (1% step)	○	○	○	○	○	○	○	○	⑤	*8
0	01	15	Current lower limit	3 to 95% (1% step)	○	○	○	○	○	○	○	○	⑤	*8
0	01	94	Current upper limit(Phase N)	5 to 120% (1% step)	○	–	–	○	–	–	○	–	⑤	*8
0	02	14	Current demand upper limit	5 to 120% (1% step)	○	○	○	○	○	○	○	○	⑤	*8
0	02	15	Current demand lower limit	3 to 95% (1% step)	○	○	○	○	○	○	○	○	⑤	*8
0	02	94	Current demand upper limit (Phase N)	5 to 120% (1% step)	○	–	–	○	–	–	○	–	⑤	*8
0	05	14	Voltage upper limit(L-L)	25 to 135% (1% step)	○	○	○	○	○	○	○	○	⑤	*8
0	05	15	Voltage lower limit(L-L)	20 to 95% (1% step)	○	○	○	○	○	○	○	○	⑤	*8
0	03	14	Voltage upper limit(L-N)	25 to 135% (1% step)	○	○	○	○	○	○	○	○	⑤	*8
0	03	15	Voltage lower limit(L-N)	20 to 95% (1% step)	○	○	○	○	○	○	○	○	⑤	*8
0	07	14	Active power upper limit	-95 to 120% (1% step)	○	○	○	○	○	○	○	○	⑤	*8
0	07	15	Active power lower limit	-120 to 95% (1% step)	○	○	○	○	○	○	○	○	⑤	*8
0	08	14	Rolling demand (kW) upper limit (Last)	5 to 120% (1% step)	○	○	○	○(*9)	○(*9)	○(*9)	–	–	⑤	*8
2	08	22	Rolling demand (kW) upper limit (Present)	5 to 120% (1% step)	○(*10)	○(*10)	○(*10)	○(*10)	○(*10)	○(*10)	–	–	⑤	*8
2	08	23	Rolling demand (kW) upper limit (Predict)	5 to 120% (1% step)	○(*10)	○(*10)	○(*10)	○(*10)	○(*10)	○(*10)	–	–	⑤	*8
0	09	14	Reactive power upper limit	-95 to 120% (1% step)	○	○	○	○	○	○	○	○	⑤	*8
0	09	15	Reactive power lower limit	-120 to 95% (1% step)	○	○	○	○	○	○	○	○	⑤	*8
0	0A	14	Rolling demand (kvar) upper limit (Last)	5 to 120% (1% step)	○(*9)	○(*9)	○(*9)	○(*9)	○(*9)	○(*9)	–	–	⑤	*8
2	0A	22	Rolling demand (kvar) upper limit (Present)	5 to 120% (1% step)	○(*10)	○(*10)	○(*10)	○(*10)	○(*10)	○(*10)	–	–	⑤	*8
2	0A	23	Rolling demand (kvar) upper limit (Predict)	5 to 120% (1% step)	○(*10)	○(*10)	○(*10)	○(*10)	○(*10)	○(*10)	–	–	⑤	*8
0	0C	14	Rolling demand (kVA) upper limit (Last)	5 to 120% (1% step)	○(*9)	○(*9)	○(*9)	○(*9)	○(*9)	○(*9)	–	–	⑤	*8
2	0C	22	Rolling demand (kVA) upper limit (Present)	5 to 120% (1% step)	○(*10)	○(*10)	○(*10)	○(*10)	○(*10)	○(*10)	–	–	⑤	*8
2	0C	23	Rolling demand (kVA) upper limit (Predict)	5 to 120% (1% step)	○(*10)	○(*10)	○(*10)	○(*10)	○(*10)	○(*10)	–	–	⑤	*8
0	0D	14	Power factor upper limit	-0.05 to 1 to 0.05 (0.05 step)	○	○	○	○	○	○	○	○	⑤	*8
0	0D	15	Power factor lower limit	-0.05 to 1 to 0.05 (0.05 step)	○	○	○	○	○	○	○	○	⑤	*8
0	0F	14	Frequency upper limit	45 to 65Hz (1Hz step)	○	○	○	○	○	○	○	○	⑤	*8
0	0F	15	Frequency lower limit	45 to 65Hz (1Hz step)	○	○	○	○	○	○	○	○	⑤	*8
0	77	E1	H.V(L-N) upper limit	0.5 to 20% (0.5% step)	○	○	○	○	○	○	○	○	⑤	*8
0	76	E1	H.V(L-L) upper limit	0.5 to 20% (0.5% step)	○	○	○	○	○	○	○	○	⑤	*8
0	75	E1	H.A upper limit	1 to 120% (1% step)	○	○	○	○	○	○	○	○	⑤	*8
0	75	F1	H.A upper limit(Phase N)	1 to 120% (1% step)	○	–	–	○	–	–	○	–	⑤	*8
1	01	25	Current unbalance limit	1 to 99% (1% step)	○(*10)	○(*10)	–	○(*10)	○(*10)	–	–	–	⑤	*8
1	03	25	Voltage unbalance limit	1 to 99% (1% step)	○(*10)	○(*10)	–	○(*10)	○(*10)	–	–	–	⑤	*8
0	80	E4	CO2 equivalent rate	0.000 to 0.999	○(*10)	○(*10)	○(*10)	○(*10)	○(*10)	○(*10)	–	–	⑤	
0	A1	3A	16bit set register 1	Refer to data type ⑧	○	○	○	○	○	○	○	○	⑧	
0	A1	3B	16bit set register 2	Refer to data type ⑧	○	○	○	○	○	○	–	–	⑧	

*1: In details of setting data and setting ranges, please refer each user's manuals.

*2: Effective value of primary voltage(L-L) is follows.

- 3P4W
  Use the primary voltage value (L-N) (*3).
- 3P3W or 1P2W
  - In details of setting data and setting ranges, please refer each user's manuals.
  - If setting value is a direct voltage value (Ex. 110V, 220V or 440V), it is set "Direct input", and set the primary voltage which is transmitted as the direct input voltage. In other case, it is set "With VT".
- 1P3W
  110V or 220V is valid only. (It's not valid in ME96NSR.)

*3: Effective value of primary voltage(L-N) is follows.

- 3P4W
  - In details of setting data and setting ranges, please refer each user's manuals.
  - If setting value is a direct voltage value (Ex. 63.5V, 100V, 110V, 220V, 230V, 240V, 254V or 277V), it is set "Direct input", and set the primary voltage which is transmitted as the direct input voltage. In other case, it is set "With VT".
- 3P3W, 1P3W or 1P2W
  It is unsupported. Use the primary voltage value (L-L) (*2).

*4: Effective value of secondary voltage is follows.

- 3P4W, 3P3W or 1P2W
  About setting range, please refer to each user's manuals.
  In case of 3P4W, set the voltage of L-N. In case of 3P3W, set the voltage of L-L. If the setting of ME96 is "Direct voltage", the setting is changed "With VT" and set the secondary voltage. Furthermore, the setting of the primary voltage is changed to the initial value or the previous value.
- 1P3W
  It is unsupported.

*5: The set value is the second unit value. (For example of 2 minutes, set as 120 seconds.) About setting range, please refer to each user's manuals.

*6: When the interval time constant is changed, the subinterval time constant is changed to 1 min. When the subinterval is changed, if the interval time constant cannot be divided by subinterval time constant, it will be the error of illegal data value.

*7: Multiplying factor differs according to settings of phase wiring, primary voltage and primary current. For details, refer to 7.2.4.

*8: About setting of upper/lower limit value.

- About setting range, please refer to each user's manuals.
- Setting of upper/lower limit value is not a percentage value of maximum scale but a direct value.
  (In case of current harmonic and phase N current harmonic, use a percentage value for the maximum scale.)
- When the setting value is other than setting step, it is rounded according to following calculation.
  Calculate: Setting value via CC-Link / maximum scale (±0step) x 100 → Rounds to the whole number.
  Example: In case of setting value is 55.5kW, maximum scale (±0step) is 100kW.
  55.5kW / 100kW x100 = 55.5% → 56%
- When out of range is set, the error code of invalid data is replied, and setting value is not changed.
- If the upper/lower limit value of W, var, DW, Dvar and DVA exceeds ±1638.3MW(Mvar), please set by the main device.

*9: Applicable only when ME96SSHA-MB/ME96SSRA-MB/ME96SSHB-MB/ME96SSRB-MB.

*10: Applicable only when ME96SSHB-MB/ME96SSRB-MB.

*11: Not applicable only when ME96SSHB-MB/ME96SSRB-MB.

7.2.3 Data format

Data	Data Format ①

Measurement Items

Current, Voltage, Active power, Reactive power, Apparent power, Power factor, Frequency, etc.

Format①

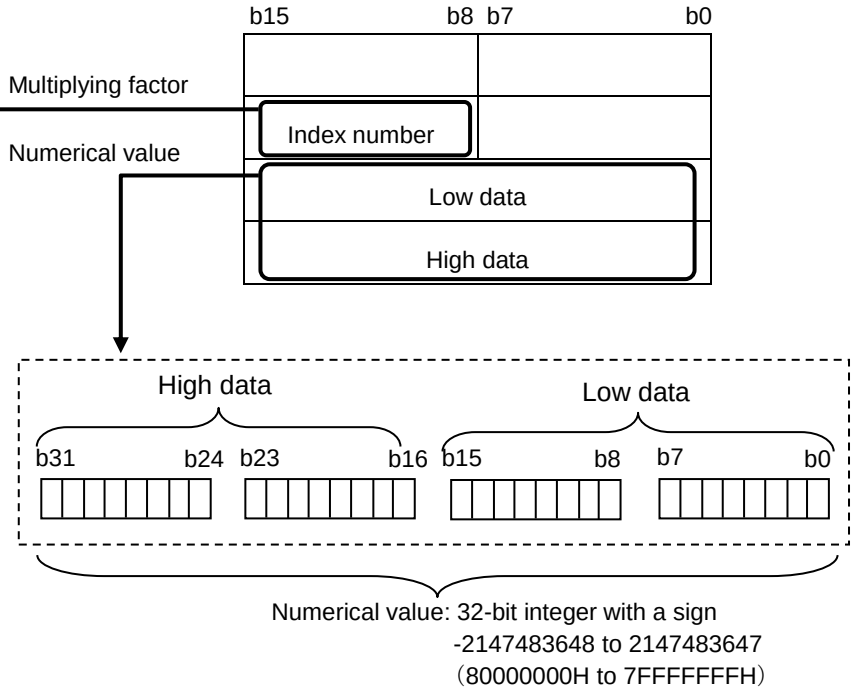

<Multiplying factor>

Multiplying factor is fixed according to setting of the phase wiring, primary voltage and primary current. (Refer to 7.2.4)

Index number	Multiplying factor	Remarks
02H	$x10^{2}$	Actual value = Numerical value x Multiplying factor
01H	x10	
00H	x1	
FFH	$x10^{-1}$	
FEH	$x10^{-2}$	
FDH	$x10^{-3}$	

<Example >

Items	Multiplying factor	Numerical value	Actual value
Active power *1	FFH ⇒$x10^{-1}$	000000FFH⇒255	255×10^{-1} =25.5[kW]
	00H ⇒x1	000000FFH⇒255	255 × 1 =255[kW]
	FFH ⇒$x10^{-1}$	FFFFFF01H⇒-255	-255×10^{-1} =-25.5[kW]
	00H ⇒x1	FFFFFF01H⇒-255	-255 × 1 =-255[kW]
Power factor *2	FFH ⇒$x10^{-1}$	000003E3H⇒995	995×10^{-1} =99.5[%]
	FFH ⇒$x10^{-1}$	FFFFFC1DH⇒-995	-995×10^{-1} =-99.5[%]
Frequency	FFH ⇒$x10^{-1}$	00000258H⇒600	600×10^{-1} =60.0[Hz]

*1: When the elements are active power and reactive power in case of a data monitor, ±1638.3MW becomes the upper(lower) value.

*2: For the data of power factor, “lag” shows as “+” (positive), “lead” shows as “-“(negative). That is same as the display of main device.

Data	Data Format ②

Measurement Items

Active energy, Reactive energy, Apparent energy, Operation time, CO2 equivalent , etc.

Format②

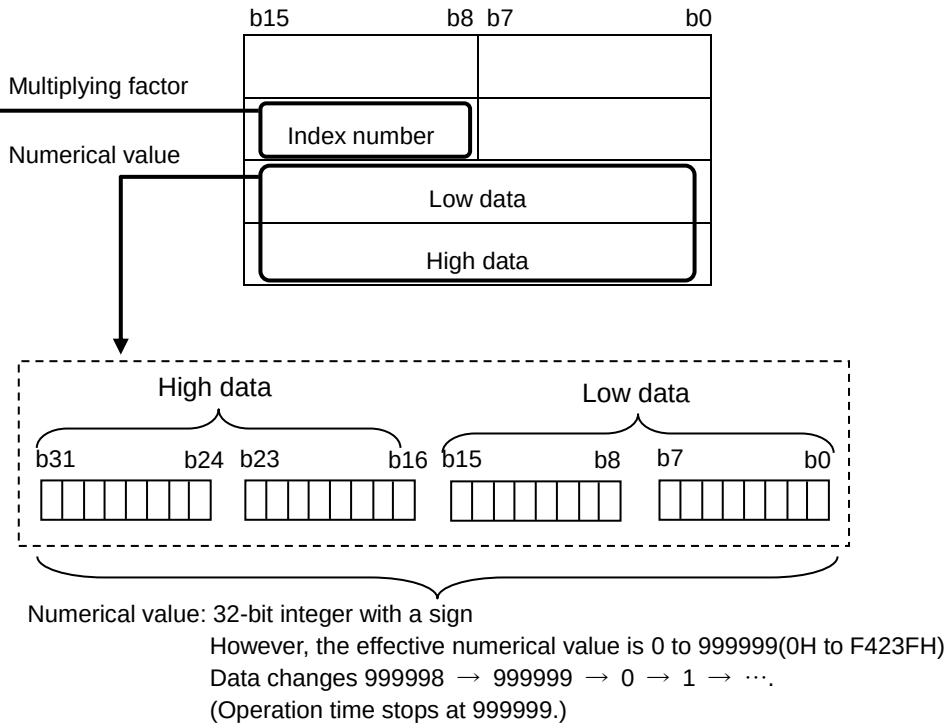

<Multiplying factor>

Multiplying factor is fixed according to setting of the phase wiring, primary voltage and primary current. (Refer to 7.2.4)

Index number	Multiplying factor	Remarks
03H	$x10^{3}$	Actual value = Numerical value x Multiplying factor
02H	$x10^{2}$	
01H	x10	
00H	x1	
FFH	$x10^{-1}$	
FEH	$x10^{-2}$	
FDH	$x10^{-3}$	
FCH	$x10^{-4}$	
FBH	$x10^{-5}$	

<Example : Active energy>

Multiplying factor	Numerical value	Actual value
FFH ⇒$x10^{-1}$	000000FFH⇒255	255×10^{-1} =25.5[kWh]
00H ⇒x1	000000FFH⇒255	255 × 1 =255[kWh]

Note: For active energy (export), reactive energy (export/Lag) and reactive energy (export/Lead), the reply data are unsigned although the display of main device has a “-“(negative) sign.

Data	Data Format ③

Measurement Items

Active energy, Reactive energy, Apparent energy, (unit fixed)

Format③

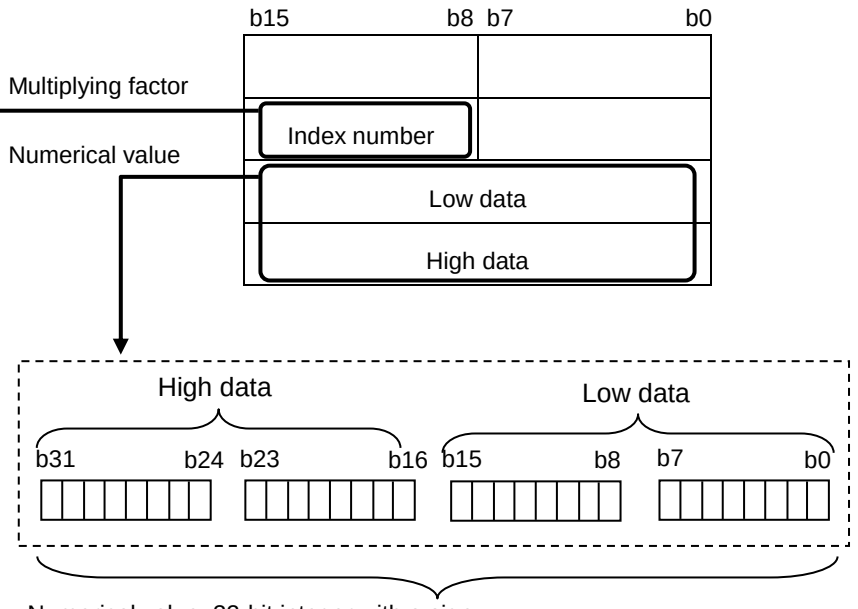

Numerical value: 32-bit integer with a sign
However, the effective numerical value is 0 to 999999999
(0H to 3B9AC9FFH)
Data changes 999999998 → 999999999 → 0 → 1 → ….

<Multiplying factor>
Multiplying factor is fixed by the channel number.

	Index number	Multiplying factor	Remarks
MWh, Mvarh, MVAh unit fixed	03H	$x10^3$	Actual value = Numerical value x Multiplying factor [kWh],[kvarh],[kVAh]
kWh, kvarh, kVAh unit fixed	00H	x1	
Wh, varh, VAh unit fixed	FDH	$x10^{-3}$	

<Example : Active energy unit fixed:Wh>

Multiplying factor	Numerical value	Actual value
FDH ⇒$x10^{-3}$	FD3ADE68B1H ⇒987654321	987654321[Wh] × 10^{-3} =987654.321[kWh]

<Example : Active energy unit fixed:kWh>

Multiplying factor	Numerical value	Actual value
00H ⇒x1	FD3ADE68B1H ⇒987654321	987654321[KWh] × 1=987654321[kWh]

Note: For active energy (export), reactive energy (export/Lag) and reactive energy (export/Lead), the reply data are unsigned although the display of main device has a “-“(negative) sign.

Data	Data Format ④

Alarm state 1

Format④

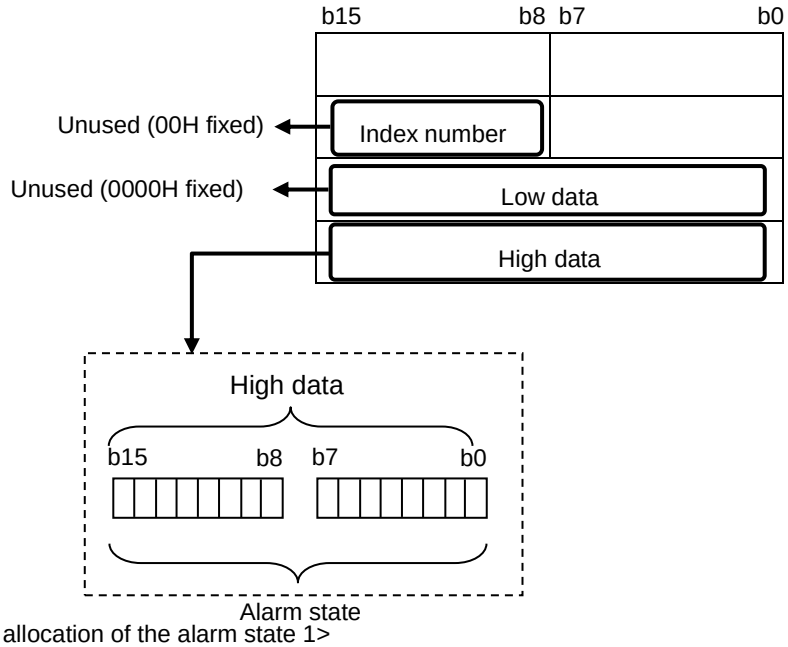

<The allocation of the alarm state 1>

Bit	Data			ME96SSH/ SSHA/SSRA/ SSHB/SSRB	ME96NSR /SSR
	Content	OFF(0)	ON(1)		
b0	Digital Input 1	OFF	ON	○	○
b1	Digital Input 2	OFF	ON	○	○
b2	Digital Input 3	OFF	ON	○	○
b3	Digital Input 4	OFF	ON	○	○
b4	Reserved	–	–	–	–
b5	Alarm (Total)	Non-Alarm	Alarm	○	○
b6	Alarm of Current Demand	Non-Alarm	Alarm	○	○
b7	Alarm of Rolling Demand (Total)	Non-Alarm	Alarm	○*3	–
b8	Alarm of Voltage	Non-Alarm	Alarm	○	○
b9	Alarm of Current	Non-Alarm	Alarm	○	○
b10	Alarm of Active power	Non-Alarm	Alarm	○	○
b11	Alarm of Reactive power	Non-Alarm	Alarm	○	○
b12	Alarm of Frequency	Non-Alarm	Alarm	○	○
b13	Alarm of Power factor	Non-Alarm	Alarm	○	○
b14	Alarm of T.H.D (Voltage)	Non-Alarm	Alarm	○	○
b15	Alarm of Harmonic current	Non-Alarm	Alarm	○	○

Alarm judging items of each phase wiring are shown as follows.

Upper/lower limit alarm element	Monitored phase			
	3P4W	3P3W(3CT,2CT)	1P3W(1N2)	1P3W(1N3)
Upper limit current, current demand	1, 2, 3	1, 2, 3	1, N, 2	1, N, 3
Lower limit current, current demand	1, 2, 3	1, 2, 3	1, 2	1, 3
Upper limit N-phase current, N-phase current demand	N	—	—	—
Lower limit N-phase current, N-phase current demand	N	—	—	—
Upper limit voltage (L-L) (*1)	12, 23, 31	12, 23, 31	1N, 2N, 12	1N, 3N, 13
Lower limit voltage (L-L) (*1)	12, 23, 31	12, 23, 31	1N, 2N, 12	1N, 3N, 13
Upper limit voltage (L-N)	1N, 2N, 3N	—	—	—
Lower limit voltage (L-N)	1N, 2N, 3N	—	—	—
Upper limit active power, reactive power, power factor	Total	Total	Total	Total
Lower limit active power, reactive power, power factor	Total	Total	Total	Total
Upper limit frequency	1N	12	1N	1N
Lower limit frequency	1N	12	1N	1N
Harmonic current total RMS value	1, 2, 3	1, 2, 3 (*2)	1, 2	1, 3
Harmonic current total RMS value N-phase	N	—	—	—
Harmonic voltage total distortion ratio	1N, 2N, 3N	12, 23	1N, 2N	1N, 3N
Upper limit rolling demand	Total	Total	Total	Total

*1: For phase 12 (or phase 31) at 1-phase 3-wire, alarm monitoring is executed using a value that is two times the set upper/lower limit alarm value.
*2: Only 3P3W (3CT) is measured for the phase 2 harmonic current.
*3: In case of ME96SSHA/SSRA/SSHB/SSRB, the alarm state is total of the rolling demand W/var/VA.

Data	Data Format ④
Alarm state 2 Format④	

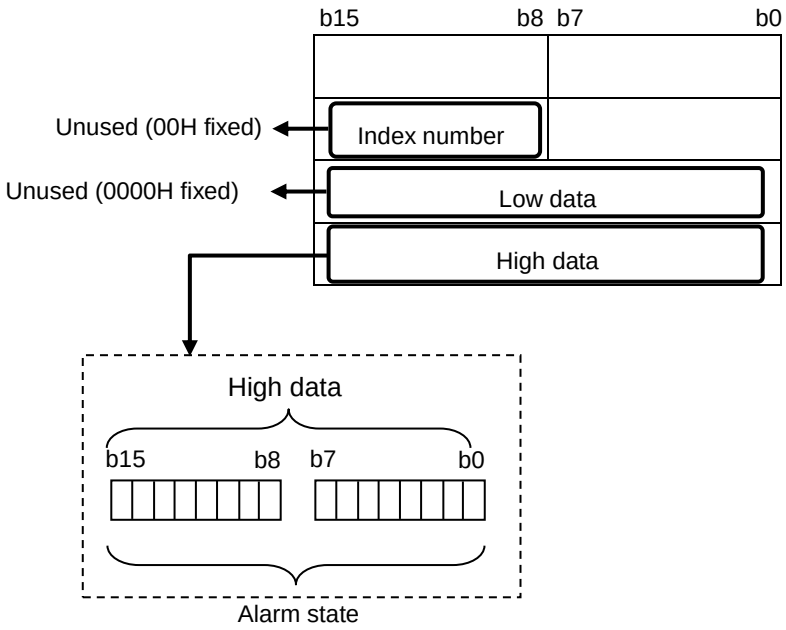

<The allocation of the alarm state 2>

Bit	Data			ME96NSR/SSH/SSR ME96SSHA/SSRA ME96SSHB/SSRB
	Content	OFF(0)	ON(1)	
b0	Upper limit alarm of current (phase 1)	Non-Alarm	Alarm	○
b1	Upper limit alarm of current (phase 2)	Non-Alarm	Alarm	○
b2	Upper limit alarm of current (phase 3	Non-Alarm	Alarm	○
b3	Upper limit alarm of current (phase N)	Non-Alarm	Alarm	○
b4	Upper limit alarm of current (total)	Non-Alarm	Alarm	○
b5	Lower limit alarm of current (total)	Non-Alarm	Alarm	○
b6	Upper limit alarm of L-L voltage (total)	Non-Alarm	Alarm	○
b7	Lower limit alarm of L-L voltage (total)	Non-Alarm	Alarm	○
b8	Upper limit alarm of L-N voltage (1-N)	Non-Alarm	Alarm	○
b9	Upper limit alarm of L-N voltage (2-N)	Non-Alarm	Alarm	○
b10	Upper limit alarm of L-N voltage (3-N)	Non-Alarm	Alarm	○
b11	Upper limit alarm of L-N voltage (total)	Non-Alarm	Alarm	○
b12	Lower limit alarm of L-N voltage (1-N)	Non-Alarm	Alarm	○
b13	Lower limit alarm of L-N voltage (2-N)	Non-Alarm	Alarm	○
b14	Lower limit alarm of L-N voltage (3-N)	Non-Alarm	Alarm	○
b15	Lower limit alarm of L-N voltage (total)	Non-Alarm	Alarm	○

Data	Data Format ④

Alarm state 3

Format④

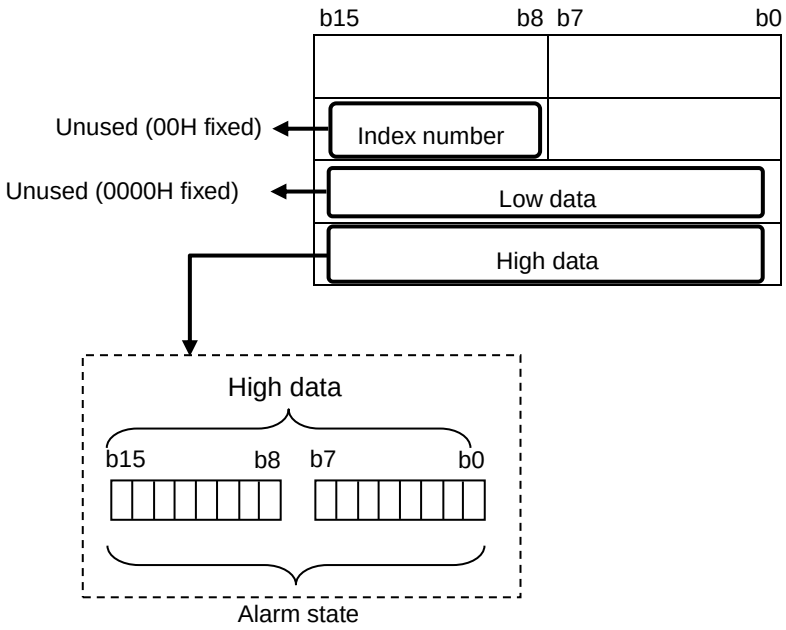

<The allocation of the alarm state 3>

Bit	Data			ME96SSHB/SSRB
	Content	OFF(0)	ON(1)	
b0	Reserved	−	−	−
b1	Reserved	−	−	−
b2	Reserved	−	−	−
b3	Reserved	−	−	−
b4	Reserved	−	−	−
b5	Reserved	−	−	−
b6	Upper limit alarm of Current unbalance	Non-Alarm	Alarm	○
b7	Upper limit alarm of Voltage unbalance	Non-Alarm	Alarm	○
b8	Reserved	−	−	−
b9	Reserved	−	−	−
b10	Reserved	−	−	−
b11	Reserved	−	−	−
b12	Reserved	−	−	−
b13	Reserved	−	−	−
b14	Reserved	−	−	−
b15	Reserved	−	−	−

Data	Data Format ⑤

Setting Items

Primary current, Primary Voltage, Secondary current, Secondary Voltage, Frequency, Upper/lower limit, CO2 equivalent rate, etc.

Format⑤

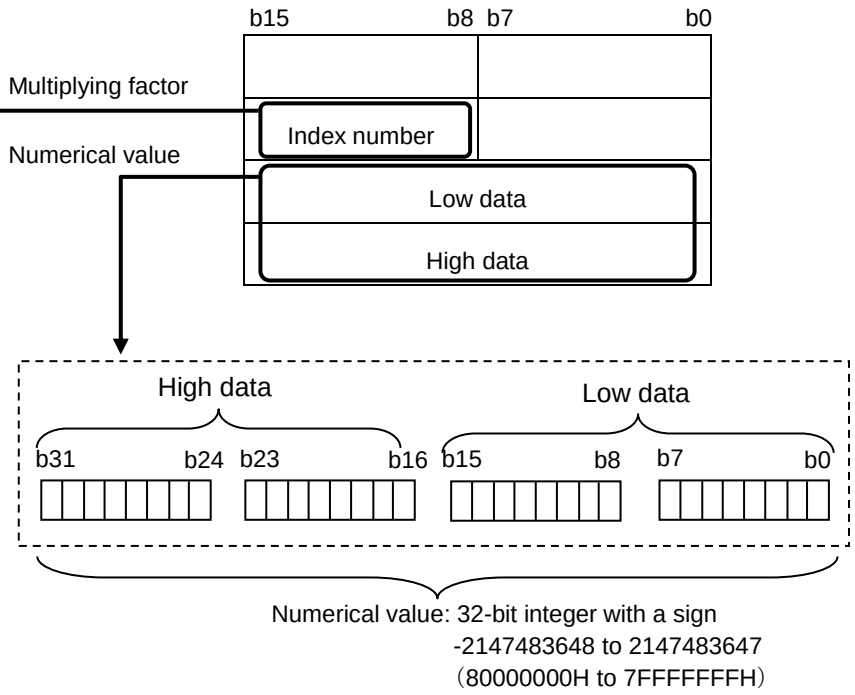

<Multiplying factor>

Multiplying factor is fixed according to setting of the phase wiring, primary voltage and primary current. (Refer to 7.2.4).

Numrical value is changed into integer according to the significant digits, the multiplying foctor is changed.

Multiplying factor	Index number	Numerical value
$x10^{-4}$	FCH	Integer data
$x10^{-3}$	FDH	Integer data
$x10^{-2}$	FEH	Integer data
$x10^{-1}$	FFH	Integer data
x1	00H	Integer data
x10	01H	Integer data
$x10^{2}$	02H	Integer data

<Example: Primary current >

Setting data	Multiplying factor	Numerical value
Setting data = 100.0A	$x10^{-1}$ ⇒FFH	1000⇒000003E8H
Setting data = 400A	x1 ⇒00H	400⇒00000190H

<Example: Primary voltage>

Setting data	Multiplying factor	Numerical value
Setting data = 110.0V	$x10^{-1}$ ⇒FFH	1100⇒0000044CH
Setting data = 3300V	x1 ⇒00H	3300⇒00000CE4H

Data	Data Format ⑥

Setting Items

Phase wiring, Time constant for current demand, Interval time, Subinterval time etc.

Format⑥

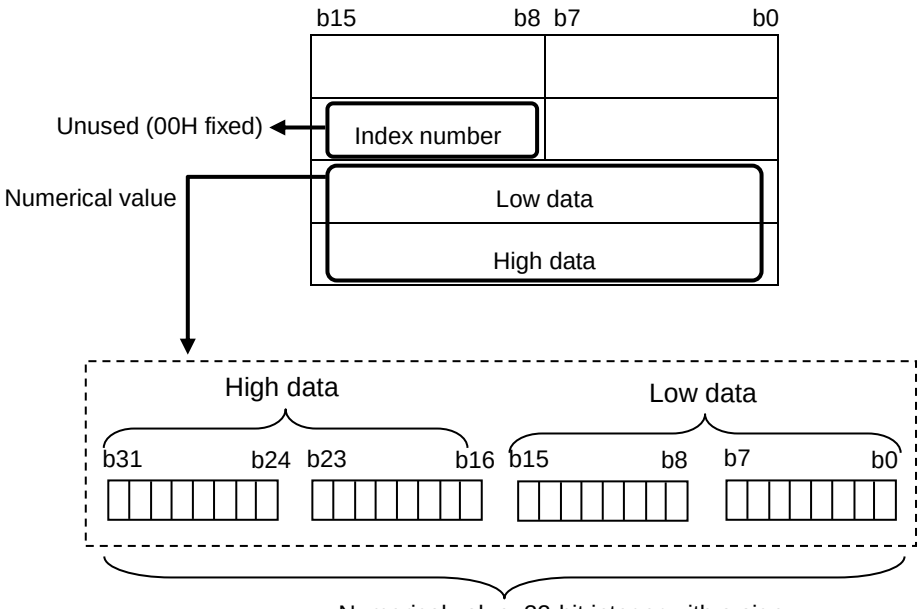

Numerical value: 32-bit integer with a sign
-2147483648 to 2147483647
(80000000H to 7FFFFFFFH)

<Data(Numerical value)>

1) Phase wiring

Setting data	Data	Note.
Single phase 2 wire (1P2W)	00000001H	About setting range, please refer to each user's manual.
Single phase 3 wire (1P3W)(1N3 display)	00000002H	
Three phase 3 wire (3P3W_2CT)	00000003H	
Three phase 4 wire (3P4W)	00000004H	
Single phase 3 wire (1P3W)(1N2 display)	00000005H	
Three phase 3 wire (3P3W_3CT)	00000006H	

2) Time constant for current demand

Example	Data	Note.
2 minutes = 120 seconds	00000078H	

3) Interval time / Subinterval time

Example	Data	Note.
15 minutes	0000000FH	

4) Byte monitor

Model	Data	Note.
All models of ME96	C50A 0500H	

5) Attribute monitor

Model	Data	Note.
All models of ME96	C510 1000H	

6) Model code

Example	Data	Note.
ME96NSR	00000010H	
ME96SSH-MB	00000014H	
ME96SSR-MB	00000013H	
ME96SSHA-MB	00000017H	
ME96SSRA-MB	00000016H	
ME96SSHB-MB	0000001BH	
ME96SSRB-MB	0000001AH	

Data	Data Format ⑦

Setting Items

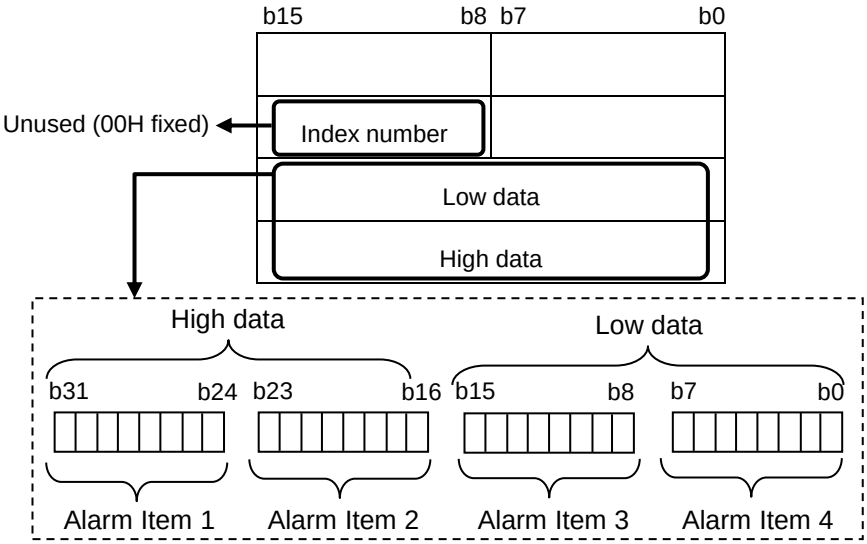

Note: The numbers of alarms which can set are 4 items.

Alarm Item

Format⑦

<Content of alarm items>

Data		Explanation	ME96 SSHB /SSRB	ME96 SSHA /SSRA	ME96 SSH	ME96 SSR /NSR
Dec.	Hex.					
00	00	No alarm	○	○	○	○
01	01	The upper limit alarm of current	○	○	○	○
02	02	The lower limit alarm of current	○	○	○	○
03	03	The upper limit alarm of phase N current	○	○	○	○
09	09	The upper limit alarm of current demand	○	○	○	○
10	0A	The lower limit alarm of current demand	○	○	○	○
11	0B	The upper limit alarm of phase N current demand	○	○	○	○
17	11	The upper limit alarm of L-L voltage	○	○	○	○
18	12	The lower limit alarm of L-L voltage	○	○	○	○
19	13	The upper limit alarm of L-N voltage	○	○	○	○
20	14	The lower limit alarm of L-N voltage	○	○	○	○
21	15	The upper limit alarm of active power	○	○	○	○
22	16	The lower limit alarm of active power	○	○	○	○
23	17	The upper limit alarm of rolling demand (kW) (Last)	○	○	○	-
25	19	The upper limit alarm of reactive power	○	○	○	○
26	1A	The lower limit alarm of reactive power	○	○	○	○
27	1B	The upper limit alarm of power factor	○	○	○	○
28	1C	The lower limit alarm of power factor	○	○	○	○
29	1D	The upper limit alarm of frequency	○	○	○	○
30	1E	The lower limit alarm of frequency	○	○	○	○
31	1F	The upper limit alarm of current harmonic	○	○	○	○
32	20	The upper limit alarm of voltage harmonic	○	○	○	○
33	21	The upper limit alarm of phase N current harmonic	○	○	○	○
35	23	The upper limit alarm of rolling demand (kvar)(Last)	○	○	-	-
36	24	The upper limit alarm of rolling demand (kVA) (Last)	○	○	-	-
37	25	The upper limit alarm of current unbalance	○	-	-	-
38	26	The upper limit alarm of voltage unbalance	○	-	-	-
39	27	The upper limit alarm of rolling demand (kW)(Present)	○	-	-	-
40	28	The upper limit alarm of rolling demand (kvar)(Present)	○	-	-	-
41	29	The upper limit alarm of rolling demand (kVA)(Present)	○	-	-	-
42	2A	The upper limit alarm of rolling demand (kW)(Predict)	○	-	-	-
43	2B	The upper limit alarm of rolling demand (kvar)(Predict)	○	-	-	-
44	2C	The upper limit alarm of rolling demand (kVA)(Predict)	○	-	-	-

Data	Data Format ⑧

Setting Items

16bit set register1

Format⑧

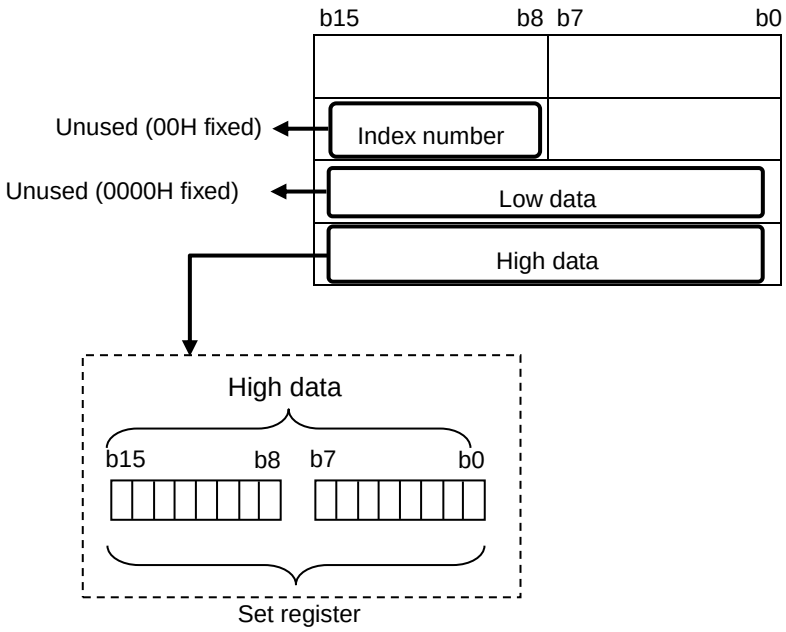

<16bit set register 1>

Bit	Data			ME96NSR ME96SSH/SSR SSHA/SSRA/SSHB/SSRB
	Content	ON(1)	OFF(0)	
b0	Reset of all alarm	executed	–	○
b1	Reset of all energy(*1) and all max/min value(*2)	executed	–	○
b2	Reset of all max/min value(*2)	executed	–	○
b3	Unusable	–	–	–
b4	Unusable	–	–	–
b5	Unusable	–	–	–
b6	Unusable	–	–	–
b7	Unusable	–	–	–
b8	Reset of all digital input (DI) latch	executed	–	○
b9	Unusable	–	–	–
b10	Unusable	–	–	–
b11	Unusable	–	–	–
b12	Unusable	–	–	–
b13	Unusable	–	–	–
b14	Reset of all energy(*1)	executed	–	○
b15	Unusable	–	–	–

*1: Periodic active energy and CO2 equivalent are not reset. Active energy (import/export), reactive energy (import(LEAD/LAG) /export(LEAD/LAG)), apparent energy and operating time are reset.

*2: Maximum value of rolling demand (kW/kvar/kVA) is not reset.

Data	Data Format ⑧

Setting Items

16bit set register2

Format⑧

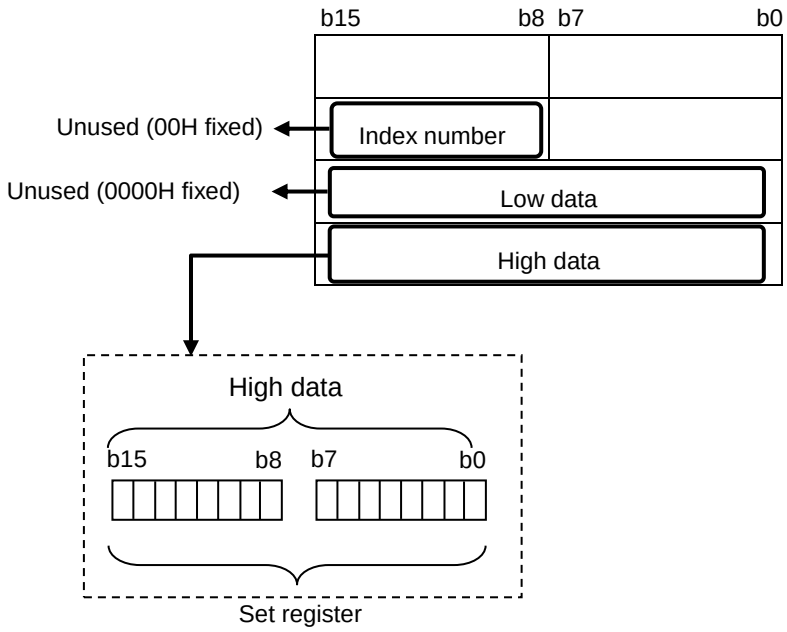

<16bit set register 2>

Bit	Data			ME96 SSHB /SSRB	ME96 SSH /SSHA /SSRA	ME96 SSR	ME96 NSR
	Content	ON(1)	OFF(0)				
b0	Select of periodic active energy (period 1) (*1)	Select	Cancel	○	○	○	–
b1	Select of periodic active energy (period 2) (*1)	Select	Cancel	○	○	○	–
b2	Select of periodic active energy (period 3) (*1)	Select	Cancel	○	–	–	–
b3	Unusable	–	–	–	–	–	–
b4	Reset of periodic active energy (period 1)	executed	–	○	○	○	–
b5	Reset of periodic active energy (period 2)	executed	–	○	○	○	–
b6	Reset of periodic active energy (period 3)	executed	–	○	–	–	–
b7	Unusable	–	–	–	–	–	–
b8	Reset of maximum value of all rolling demand	executed	–	○	○	–	–
b9	Reset of CO2 equivalent value	executed	–	○	–	–	–
b10	Unusable	–	–	–	–	–	–
b11	Unusable	–	–	–	–	–	–
b12	Unusable	–	–	–	–	–	–
b13	Unusable	–	–	–	–	–	–
b14	Restart of rolling demand calculation	executed	–	○	○	–	–
b15	Unusable	–	–	–	–	–	–

*1: When the bit in on(1), the active energy (import) is add to the active energy (period n). (where n= 1,2,3)

7.2.4 Multiplying Factor

Conditions of multiplying factor by setup of each element are shown below.

Element	Unit	Condition		Multiplying factor
Voltage Harmonics voltage	V	Primary voltage	less than 440V	$x10^{-1}$
			440V or more	x1
Current Current demand Harmonics current	A	Primary current	less than 4A	$x10^{-3}$
			4A or more and less than 40A	$x10^{-2}$
			40A or more and less than 400A	$x10^{-1}$
			400A or more and less than 4000A	x1
Active power Rolling demand power Reactive power Apparent power	kW kvar kVA	Total load power *1	0kW or more and less than 1.2kW	$x10^{-4}$
			1.2kW or more and less than 12kW	$x10^{-3}$
			12kW or more and less than 120kW	$x10^{-2}$
			120kW or more and less than 1200kW	$x10^{-1}$
			1200kW or more and less than 12000kW	x1
			12000kW or more and less than 120000kW	x10
			120000kW or more	$x10^{2}$
Active energy Reactive energy Apparent energy CO2 equivalent	kWh kvarh kVAh kg	Total load power *1	0kW or more and less than 10kW	$x10^{-2}$
			10kW or more and less than 100kW	$x10^{-1}$
			100kW or more and less than 1000kW	x1
			1000kW or more and less than 10000kW	x10
			10000kW or more and less than 100000kW	$x10^{2}$
			100000kW or more	$x10^{3}$
Active energy (extended) Reactive energy (extended)	kWh kvarh	Total load power *1	0kW or more and less than 10kW	$x10^{-5}$
			10kW or more and less than 100kW	$x10^{-4}$
			100kW or more and less than 1000kW	$x10^{-3}$
			1000kW or more and less than 10000kW	$x10^{-2}$
			10000kW or more and less than 100000kW	$x10^{-1}$
			100000kW or more	x1
Power factor	%	-	-	$x10^{-1}$
Frequency	Hz	-	-	$x10^{-1}$
Harmonics distortion (Current)	%	-	-	$x10^{-1}$
Harmonics distortion (Voltage)	%	-	-	$x10^{-1}$
Active energy (unit: Wh fixed) Reactive energy (unit: varh fixed) Apparent energy (unit: VA fixed)	Wh varh VAh	-	-	$x10^{-3}$
Active energy (unit: kWh fixed) Reactive energy (unit: kvarh fixed) Apparent energy (unit: kVA fixed)	kWh kvarh kVAh	-	-	x1
Active energy (unit: MWh fixed) Reactive energy (unit: Mvarh fixed) Apparent energy (unit: MVA fixed)	MWh Mvarh MVAh	-	-	$x10^{3}$
Operating time	h	-	-	x1
Current/Voltage unbalance	%	-	-	$x10^{-2}$

*1: How to calculate primary rated power is the as follows.

$$\text{Total rated power[kW]} = \frac{\alpha \times (\text{Primary voltage}) \times (\text{Primary current})}{1000}$$

Phase wiring	α	Note
1P2W	α=1	
1P3W	α=2	Primary voltage is L-N voltage.
3P3W	α=1.732	
3P4W	α=3	Primary voltage is L-N voltage.

7.2.5 About Error Occurrence

When the command and related data transmitted to ME96 is improper or ME96 is in H/W error, RX(n+1)A (Error status flag) becomes 1(ON), the error code shown in Table 7.15 is returned as reply data.

Table 7.15 Error Code

Error Description	Error Code (Hex.)
Undefined command	01h
Illegal command or packet length	40h
Invalid group number	41h
Invalid channel number	42h
ME96 is in set-up mode or test mode	43h, 44h
Invalid data for set-up	51h
It is not set the item of alarm	55h

If an error occurs, the error code is written into the RWrn as shown in the figure below, and RX(n+1)A (error status flag) is turned on (error occurrence) and RX(n+1)B (remote READY) is turned off (normal communication stop). For the error resetting method, refer to “6.3 Error Communication”.

(1) At the command No. is in range

Remote register RWrn

	b15 b8	b7 b0
n	Channel No.	Group No.
n+1	00H	00H
n+2	00H	Error code
n+3	00H	00H

(2) At the command No. is out of range

Remote register RWrn

	b15 b8	b7 b0
n	00H	Error code
n+1	00H	00H
n+2	00H	00H
n+3	00H	00H

8. Abbreviations and Special Terms

Abbreviations and special terms used in this manual are shown below:

Abbreviation and Special Terms	Description
Master station	Station which controls remote stations and local stations. One station is required for one system.
Local station	Station with the CPU which can communicate with master station and other local stations.
Remote I/O station	Remote station which deals with bit information only.
Remote device station	Remote station which deals with bit information and word information.
Remote station	General name for remote I/O station and remote device station. Controlled by a master station.
Intelligent device station	Station that can perform transient transmission.
RX	Remote input
RY	Remote output
RWw	Remote resister (write area)
RWr	Remote resister (read area)
Command	Identification code allocated to items to be monitored or set. ME96 uses a special-purpose command that is transmitted to monitor each measurement value or set each parameter.
Demand value	The demand value is an approximate average value during the demand time period. When it is set to 0, each demand present value becomes equivalent to the present value.

9. Program Example

This chapter provides example programs of two types. One is the program to monitor only active energy from a ME96. Another is the program to monitor the multi-items from two units of ME96.

*1. Sample programs are for Q series programmable controller.
*2. Sample programs are created by using “SW8D5C-GPPW GX Developer”.
*3. The refresh set with the automatic refresh parameters and the refresh executed with the FROM/TO instructions cannot be performed simultaneously.

9.1 Program Example 1

9.1.1 Program Content

This section shows an example the program to monitor only active energy from a ME96 whose station number is 1. This program example is assumed the system configuration in below and the I/O number of the master station is X/Y00 to X/Y 1F.

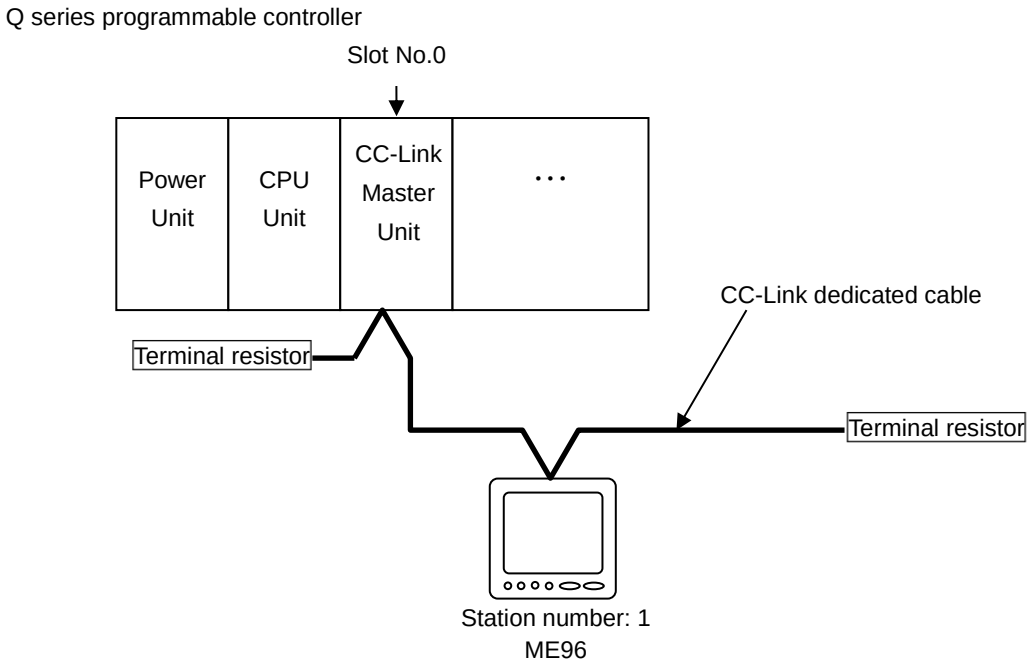

※Reading data

Station number 1: ME96	Active energy (import)

9.1.2 Parameter Settings

Parameter settings are set as following with GX Developer.

(1) Network Parameter Settings and Auto Refresh Parameter Settings

The following is shown CC-Link network parameter settings and auto refresh parameter settings.

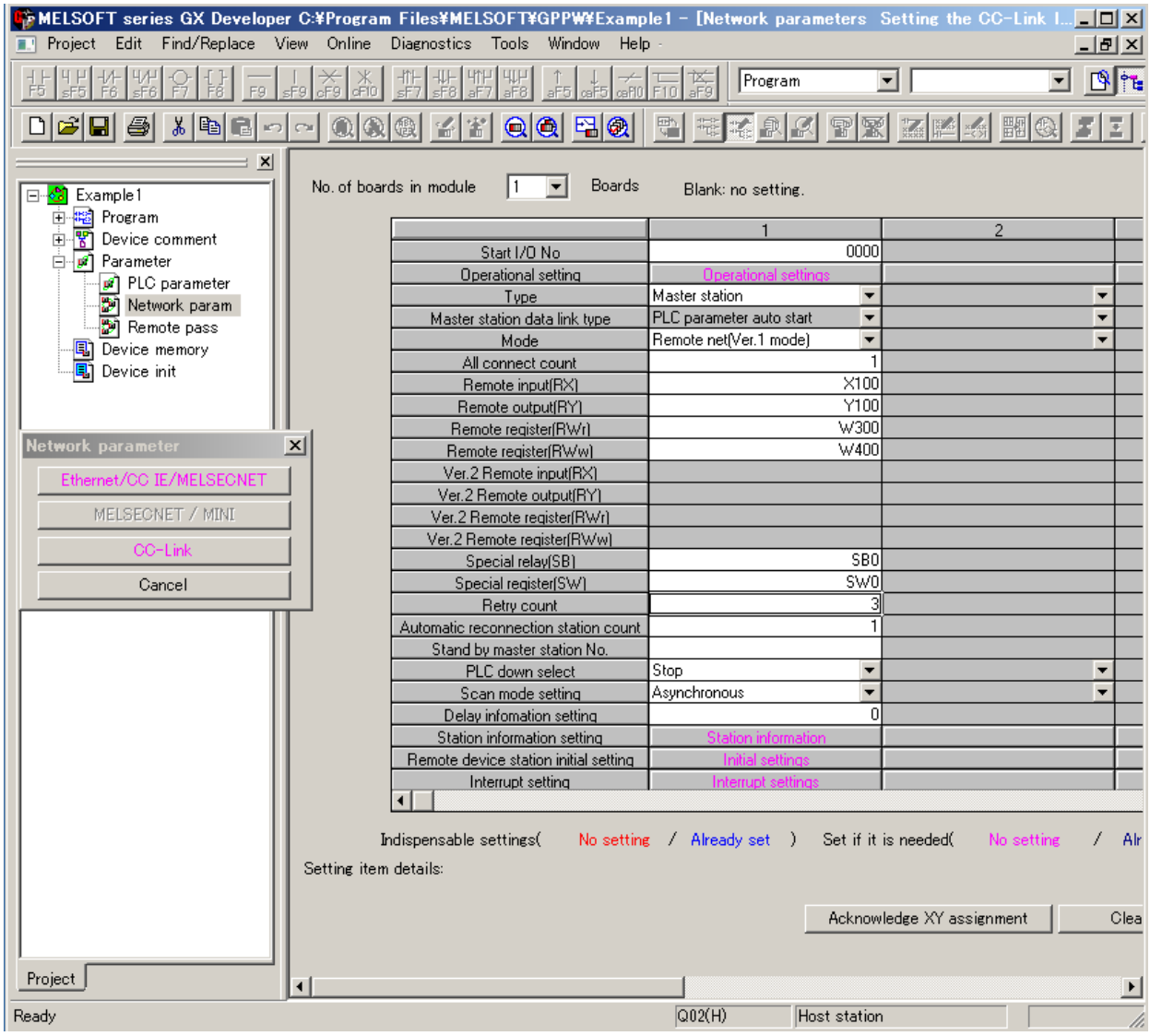

Setting Item	Description	Example for settings	Remarks
No.of boards in module	Set the "No. of boards in module" for which the network parameters are to be set.	1	
Start I/O No	Set the "Start I/O No." for the master station.	0000	Set the same setting of StartXY in PLC parameters setting.
Type	Set the station type.	Master station	
Mode	Set the CC-Link mode.	Remote net (Ver.1 mode)	"Remote net ver.2 mode "and "Remote net additional mode" can be also used in case of the QJ61BT11N.
All connect count	Set the total number of connected stations in the CC-Link system including reserved stations.	1	
Remote input (RX)	Set the remote input (RX) refresh device.	X100	Device name - Select from X, M, L, B, D, W, R or ZR. Device number - Within the range of the device points that the CPU has.
Remote output (RY)	Set the remote output (RY) refresh device.	Y100	Device name - Select from Y, M, L, B, T, C, ST, D, W, R or ZR. Device number - Within the range of the device points that the CPU has.
Remote register (RWr)	Set the remote register (RWr) refresh device.	W300	Device name - Select from M, L, B, D, W, R, or ZR. Device number - Within the range of the device points that the CPU has.
Remote register (RWw)	Set the remote register (RWw) refresh device.	W400	Device name - Select from M, L, B, T, C, ST, D, W, R, or ZR. Device number - Within the range of the device points that the CPU has.
Special relay (SB)	Set the link special relay (SB) refresh device.	SB0	Device name - Select from M, L, B, D, W, R, SB or ZR. Device number - Within the range of the device points that the CPU has.
Special register (SW)	Set the link special register (SW) refresh device.	SW0	Device name - Select from M, L, B, D, W, R, SW or ZR. Device number - Within the range of the device points that the CPU has.
Retry count	Set the number of retries for "Retry count", when a communication error occurs.	3	
Automatic reconnection station count	Set the number of modules that can return to system operation by a single link scan.	1	
Standby master station No.	Set the station number for the standby master station	Blank	Blank: No standby master station specified.
PLC down select	Set the data link status for "PLC down select", when a master station programmable controller CPU error occurs.	Stop	
Scan mode setting	Set whether the link scan for the sequence scan is synchronous or asynchronous.	Asynchronous	
Delay information setting	Set for the link scan delay time.	0	

(2) Operational Settings

Operational settings are as follows.

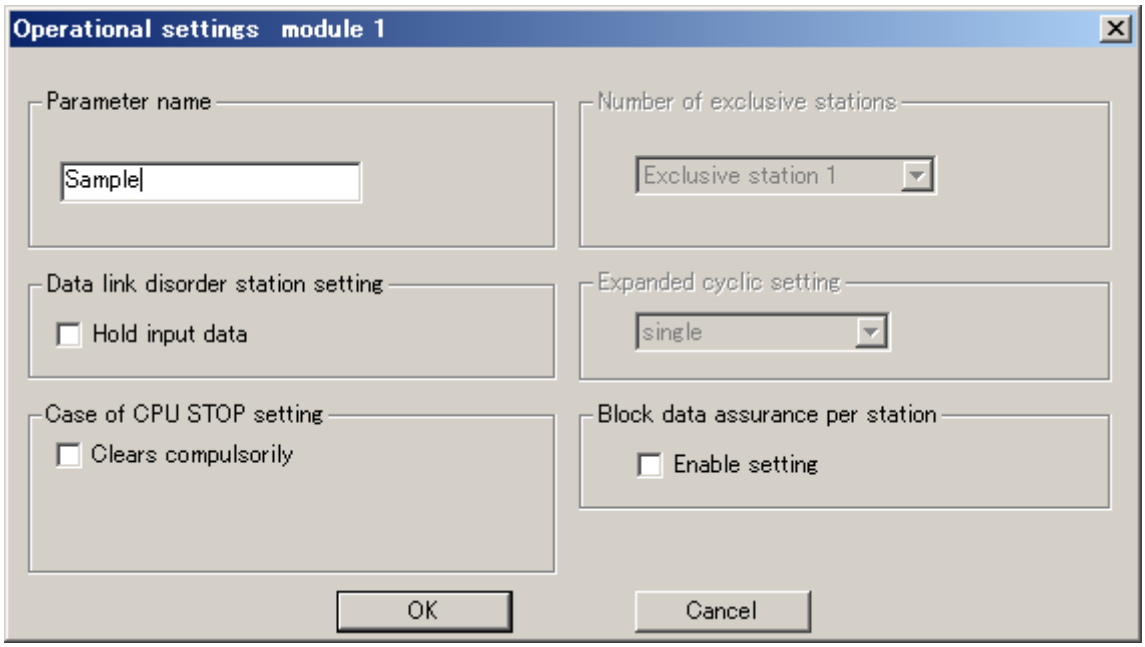

(3) Station Information Settings

Station information settings are as follows.

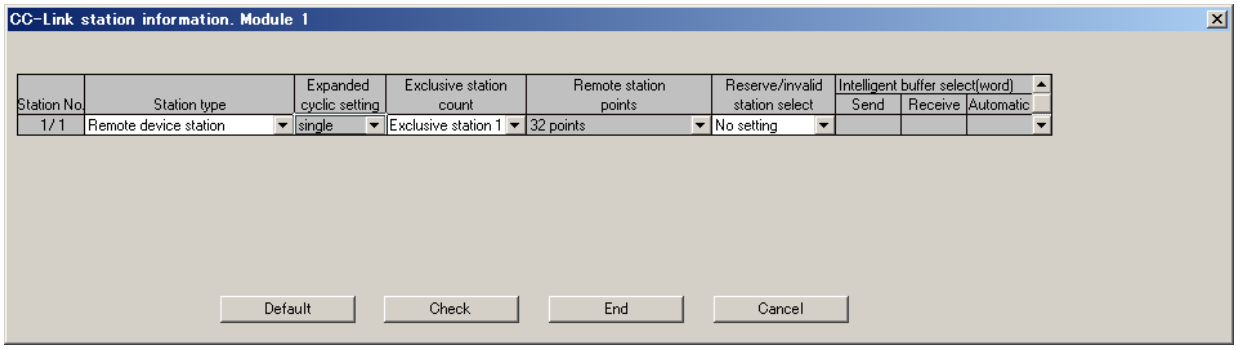

(4) File Register Settings

This program example uses file registers (R). The procedures of file register settings are as follows.

1) Double-click “PLC parameter”.
2) Select “PLC file”.
3) Select “Use the same file name as the program” or “Use the following file” and set the each item.

In details, refer to the manual for the CPU module used.

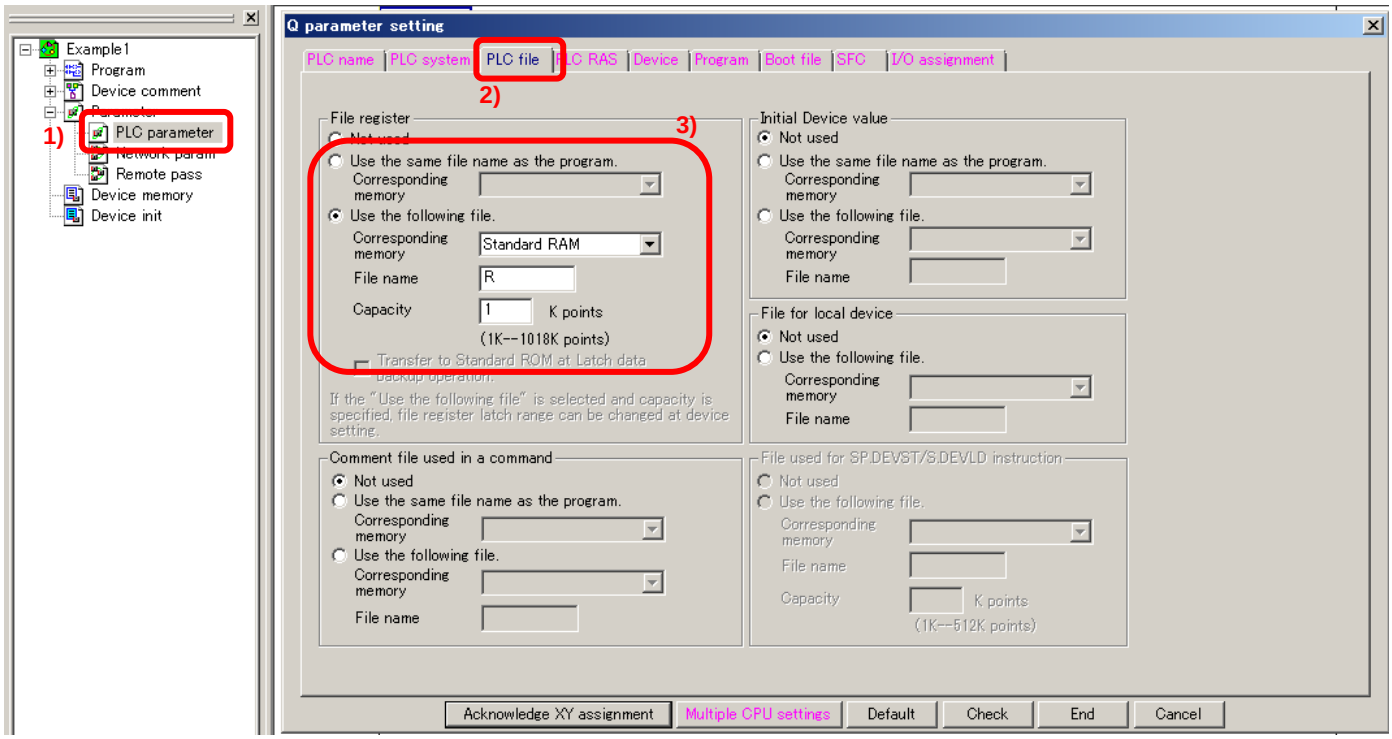

- If you use the CPU module which doesn’t have file registers (ex. Q00UJCPU), replace the file register (R) with other device (ex. Data register (D))

9.1.3 Program example

(1) Example of Send Data Setting

This program describes an example of setting commands which are sent to ME96 to devices.

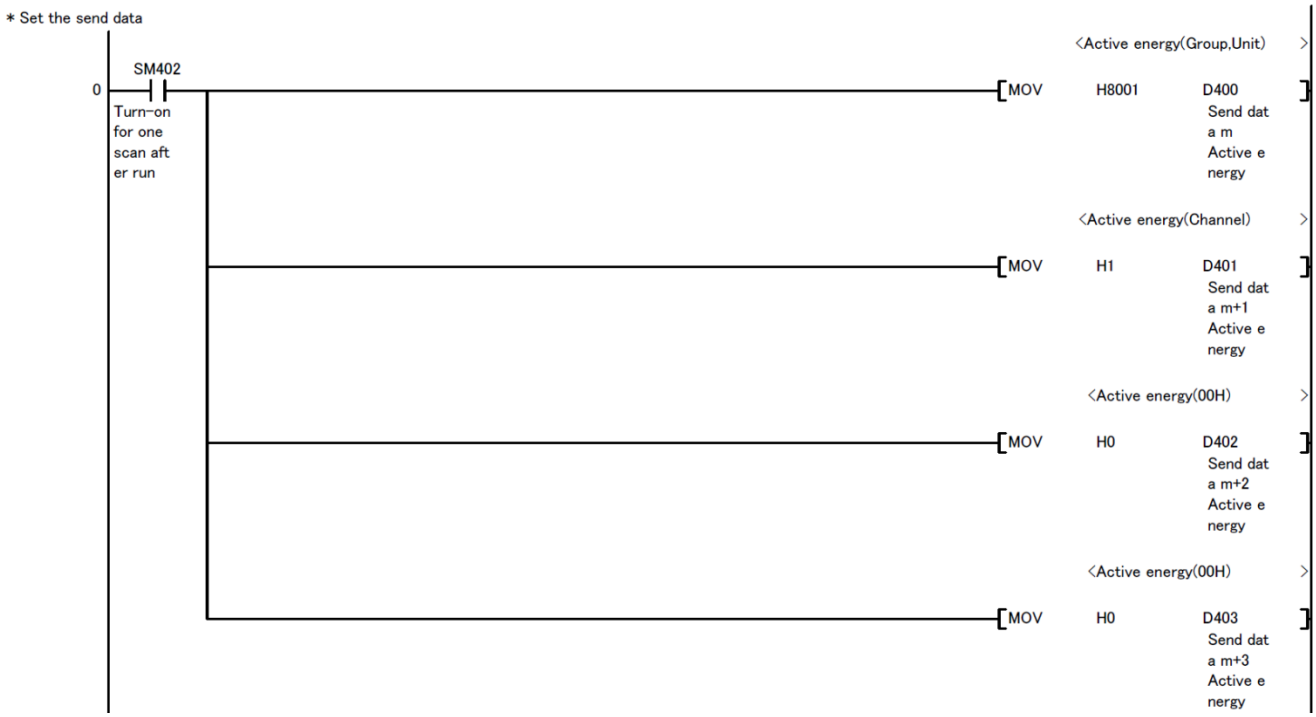

(i) Device Allocation

The following table lists devices used above the example.

Device No.	Setting data	Descriptions	Note
D400	H8001	Send data for monitoring. (Group No. :H80, Unit No.:H0, Command No.: H1)	It changes depending on the data which you want to monitor.
D401	H1	Send data for monitoring. (Channel No.: H01)	It changes depending on the data which you want to monitor.
D402	H0	Send data for monitoring. (H0 fixed.)	
D403	H0	Send data for monitoring. (H0 fixed.)	

Note: Set the D400 to D403 same as that set device in “(3)Example of Normal Communication”. Depending on the data that you want to monitor, the setting data vary.

The following table lists the examples of setting data.

Command	Descriptions	Device No.	Setting data	Descriptions of setting data.
Data monitor	Phase 1 current	D400	H0101	Group No. :H01, Unit No.:H0, Command No.: H1
		D401	H0021	Channel No.: H21
		D402	H0000	H0 fixed.
		D403	H0000	H0 fixed.
	Total active power	D400	H0701	Group No. :H07, Unit No.:H0, Command No.: H1
		D401	H0001	Channel No.: H01
		D402	H0000	H0 fixed.
		D403	H0000	H0 fixed.
Data set	Phase wiring (Set to 3P3W)	D400	HE002	Group No. :HE0, Unit No.:H0, Command No.: H2
		D401	H0013	Index No.: H00, Channel No.: H13
		D402	H0003	Low data
		D403	H0000	High data

For details, refer to “7.2.2.Details of Commands”

(2) Example of Initial

After confirming if data link is normal or not, the initial process is performed only when the connection status is normal.

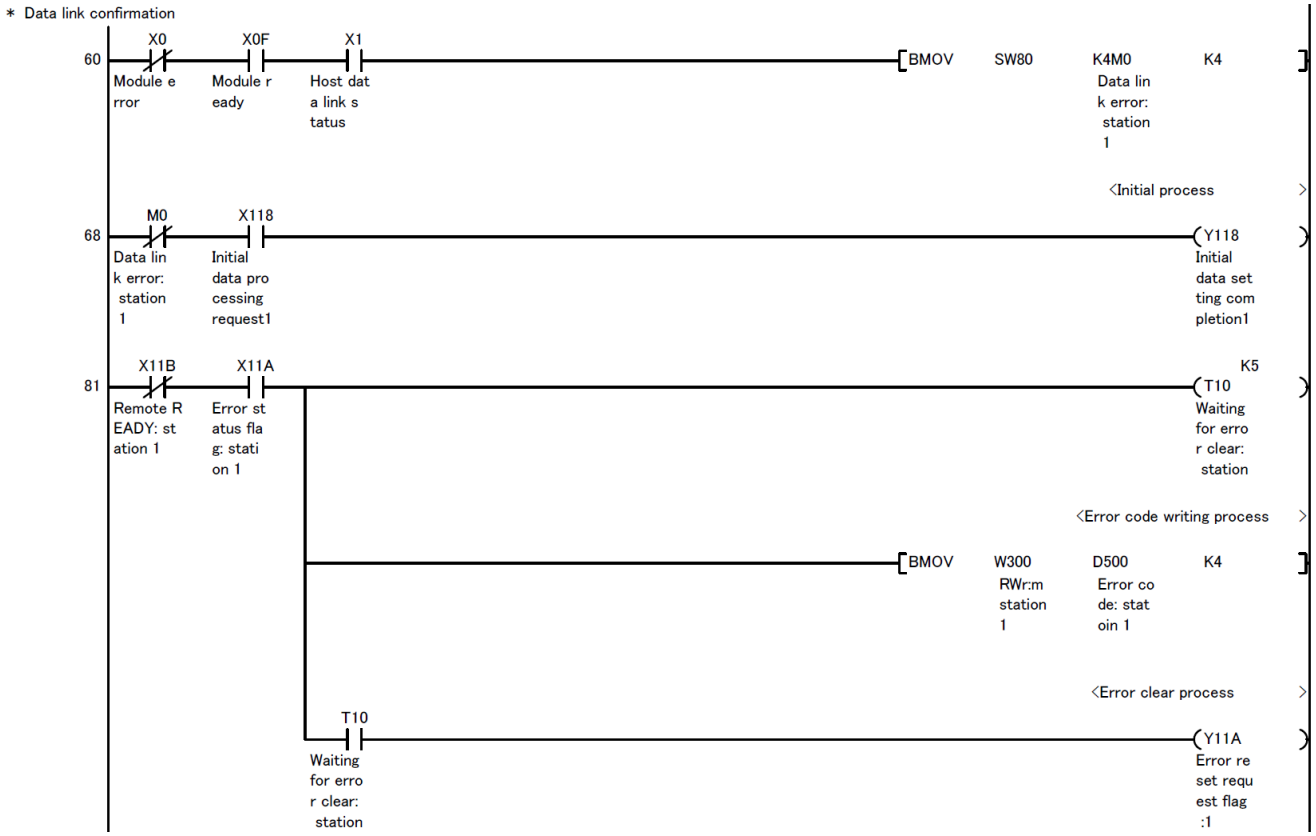

(i) Device Allocation

The following table lists devices used above the example.

Device No.	Descriptions	Note
X0	This signal indicates whether the module is normal of faulty. OFF: Module normal ON: Module error	Depending on the start I/O number of the master/local module, the devices No. vary. <Example> When the start I/O number of the master/local module is 0030: X0→X30 X1→31 X0F→X3F
X1	This signal indicates the data link status of the host station. OFF: Data link stopped ON: During data link	
X0F	This signal indicates whether the module is ready for operation. When the module becomes ready, this signal turns on. This signal turns off under either condition. · An error has been detected in the switch setting of the module. · Module error (Xn0) turns on.	
X118	Remote input (RX) of ME96. Initial data processing request flag.	Depending on the setting of refresh device and the station number of ME96, the devices No. vary. (In details, refer to “7.1.1 Remote input RX”)
X11A	Remote input (RX) of ME96. Error status flag.	
X11B	Remote input (RX) of ME96. Remote READY.	
Y118	Remote output (RY) of ME96. Initial data setting completion flag.	Depending on the setting of refresh device and the station number of ME96, the devices No. vary. (In details, refer to “7.1.2 Remote Output RY”)
Y11A	Remote output (RY) of ME96. Error reset request flag.	
W300 to W303	Remote register (RWr) Receiving data.	Depending on the setting of refresh device and the station number of ME96, the devices No. vary. (In details, refer to “7.2 Remote Register (RWr, RWw)”)
SW80 to SW83	Data link status of each station. OFF: Normal ON: Error	Depending on the setting of refresh device, the devices No. vary.
M0 to M63	Data link status of each station. OFF: Normal ON: Error	Devices in a CPU module. (User selectable)
D500 to D503	Error code receiving data.	Devices in a CPU module. (User selectable) About error code, refer to “7.2.5About Error Occurrence”.
T10	Timer for error canceling wait.	Devices in a CPU module. (User selectable)

(3) Example of Normal Communication

This program describes an example of monitoring of measurement values.

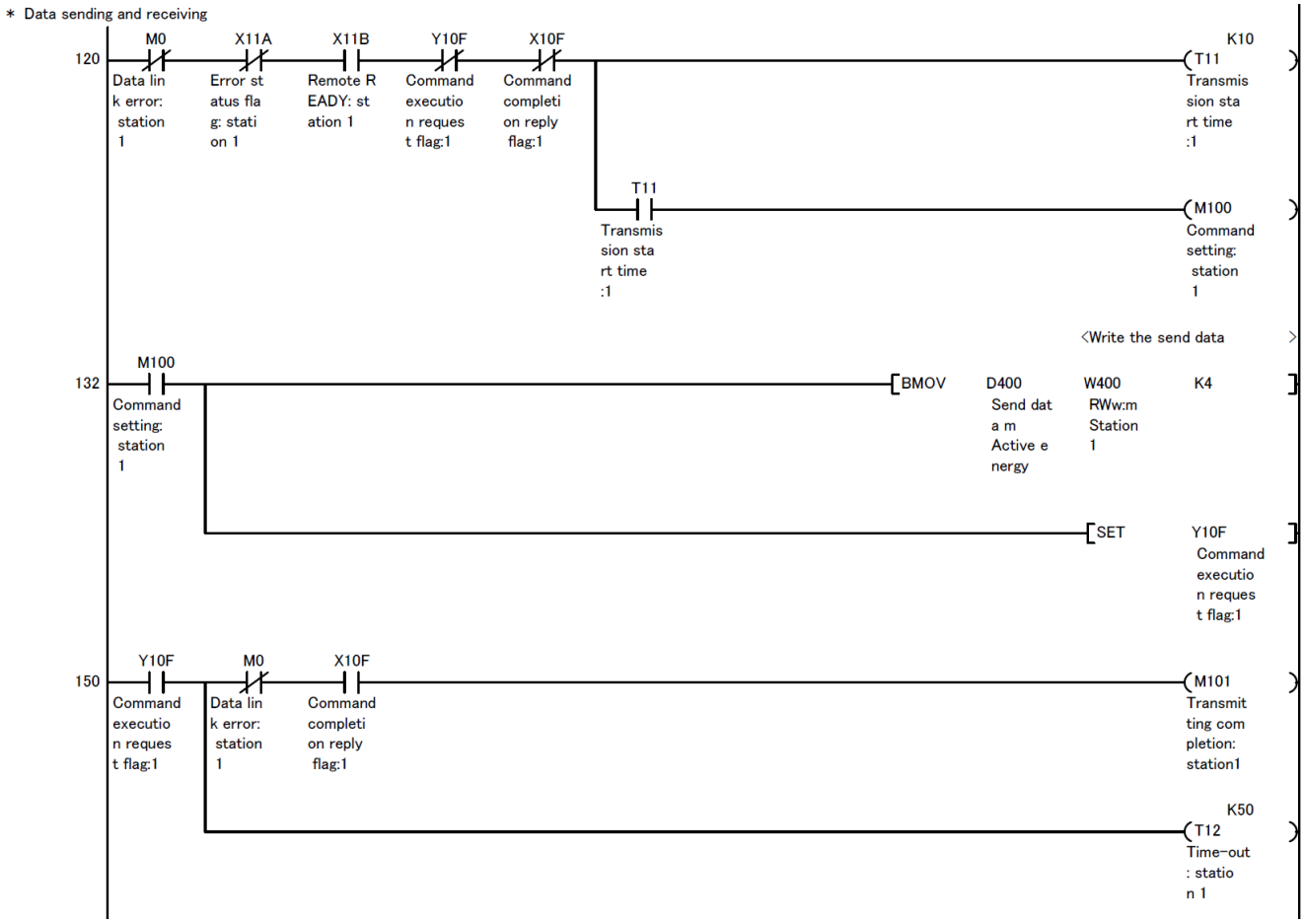

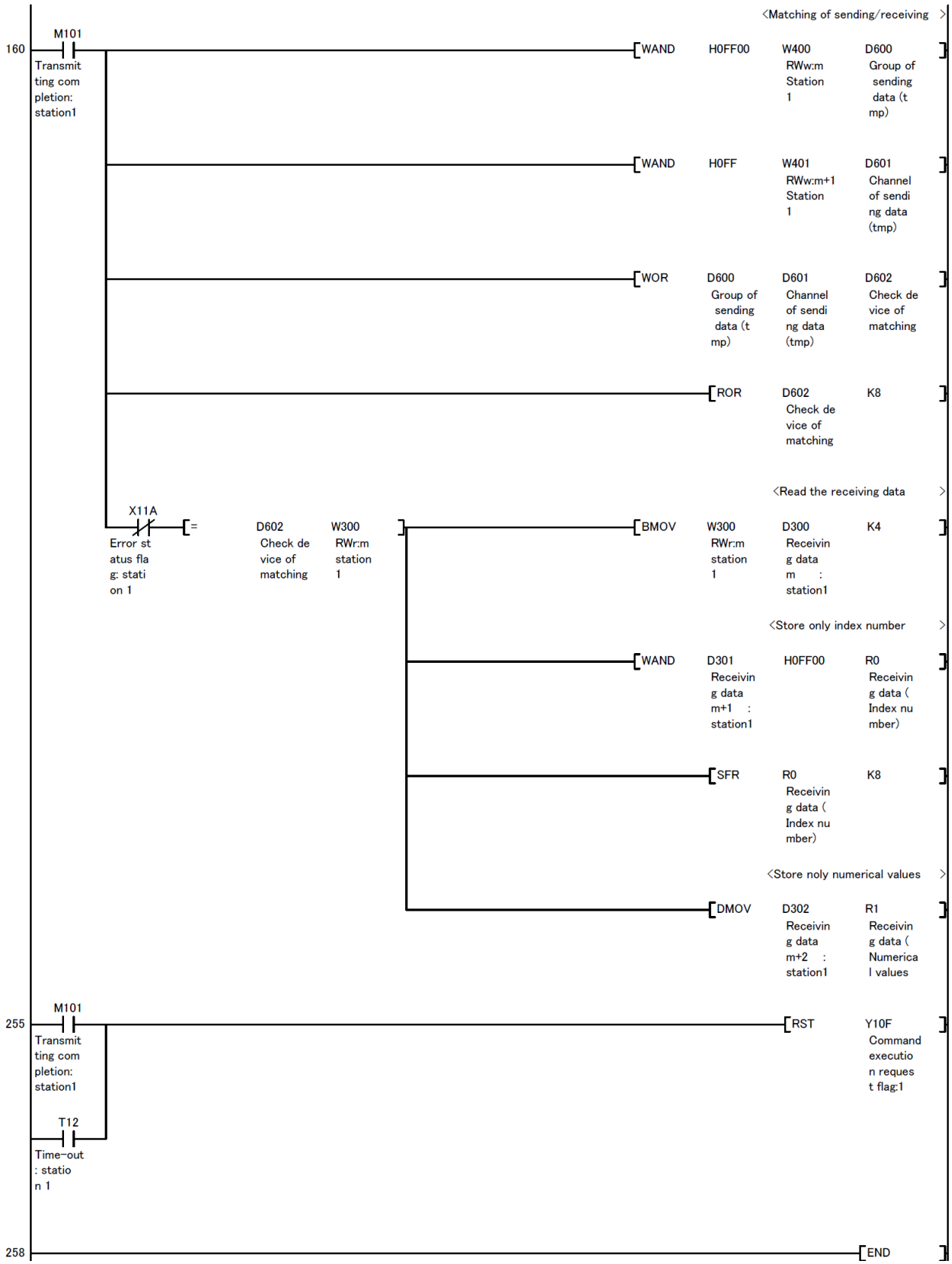
<Matching of sending/receiving >
160
M101
Transmitting completion: station1
WAND H0FF00 W400 RWw:m Station 1 D600 Group of sending data (tmp)
WAND H0FF W401 RWw:m+1 Station 1 D601 Channel of sending data (tmp)
WOR D600 Group of sending data (tmp) D601 Channel of sending data (tmp) D602 Check device of matching
ROR D602 Check device of matching K8
<Read the receiving data >
X11A
Error status flag: station 1
= D602 Check device of matching W300 RWr:m station 1
BMOV W300 RWr:m station 1 D300 Receiving data m : station1 K4
<Store only index number >
WAND D301 Receiving data m+1 : station1 H0FF00 R0 Receiving data (Index number)
SFR R0 Receiving data (Index number) K8
<Store noly numerical values >
DMOV D302 Receiving data m+2 : station1 R1 Receiving data (Numerical values
255
M101
Transmitting completion: station1
RST Y10F Command execution request flag:1
T12
Time-out : station 1
258
END

(i) Device Allocation

The following table lists devices used above the example.

<table>
<tr><th>Device No.</th><th>Descriptions</th><th>Note</th></tr>
<tr><td>X10F</td><td>Remote input (RX) of ME96.
Command completion reply flag.</td><td rowspan="3">Depending on the setting of refresh device and the station number of ME96, the devices No. vary. (In details, refer to “7.1.1 Remote input RX”)</td></tr>
<tr><td>X11A</td><td>Remote input (RX) of ME96.
Error status flag.</td></tr>
<tr><td>X11B</td><td>Remote input (RX) of ME96.
Remote READY.</td></tr>
<tr><td>Y101</td><td>Remote output (RY) of ME96.
Command execution request flag.</td><td>Depending on the setting of refresh device and the station number of ME96, the devices No. vary. (In details, refer to “7.1.2 Remote Output RY”)</td></tr>
<tr><td>W300 to W303</td><td>Remote register (RWr)
Receiving data.</td><td rowspan="2">Depending on the setting of refresh device and the station number of ME96, the devices No. vary. (In details, refer to “7.2 Remote Register (RWr, RWw)”)</td></tr>
<tr><td>W400 to W403</td><td>Remote register (RWw)
Sending data.</td></tr>
<tr><td>D300 to D303</td><td>Reading device of receiving data</td><td>Devices in a CPU module. (User selectable)
The following table lists the description.
<table>
<tr><td>D300</td><td>Channel No., Group No.</td></tr>
<tr><td>D301</td><td>Index number</td></tr>
<tr><td>D302</td><td>Low data</td></tr>
<tr><td>D303</td><td>High data</td></tr>
</table></td></tr>
<tr><td>D400 to D403</td><td>Writing device of sending data</td><td>Devices in a CPU module. (User selectable)
Set the same device which the commands are written in “(1)Example of Send Data Setting”.</td></tr>
<tr><td>D500 to D503</td><td>Error code receiving data.</td><td>Devices in a CPU module. (User selectable)
About error code, refer to “7.2.5About Error Occurrence”.</td></tr>
<tr><td>D600 to D602</td><td>Checking device for match/mismatch of sending data and receiving data.</td><td>Devices in a CPU module. (User selectable)</td></tr>
<tr><td>M0</td><td>Data link status of station 1.</td><td>Devices in a CPU module. (User selectable)
Set the same device of data link status which set in “(2)Example of Initial”.</td></tr>
<tr><td>M100</td><td>Command setting completion flag.</td><td>Devices in a CPU module. (User selectable)</td></tr>
<tr><td>M101</td><td>Transmitting completion flag.</td><td>Devices in a CPU module. (User selectable)</td></tr>
<tr><td>T11</td><td>Transmission start time.</td><td>Devices in a CPU module. (User selectable)</td></tr>
<tr><td>T12</td><td>Time-out.</td><td>Devices in a CPU module. (User selectable)</td></tr>
<tr><td>R0</td><td>Receiving data (Index number)</td><td>Devices in a CPU module. (User selectable)
The following table lists the description of index number.
<table>
<tr><th>Index number</th><th>Multiplicand</th><th>Remarks</th></tr>
<tr><td>03H</td><td>$\times 10^{3}$</td><td rowspan="9">Actual value = Numerical value × Multiplicand</td></tr>
<tr><td>02H</td><td>$\times 10^{2}$</td></tr>
<tr><td>01H</td><td>$\times 10$</td></tr>
<tr><td>00H</td><td>$\times 1$</td></tr>
<tr><td>FFH</td><td>$\times 10^{-1}$</td></tr>
<tr><td>FEH</td><td>$\times 10^{-2}$</td></tr>
<tr><td>FDH</td><td>$\times 10^{-3}$</td></tr>
<tr><td>FCH</td><td>$\times 10^{-4}$</td></tr>
<tr><td>FBH</td><td>$\times 10^{-5}$</td></tr>
</table>
On the basis of the index number, multiply the numerical value by the multiplicand in the host side.</td></tr>
<tr><td>R1, R2</td><td>Receiving data (numerical value)</td><td>Devices in a CPU module. (User selectable)
Numerical value is 32-bit integer with a sign. However, the effective numerical value is 0～999999(0H～F423FH). Data changes 999998 → 999999 → 0 → 1 ⋯.</td></tr>
</table>

Note: In details of index number and numerical value, refer to “7.2.2Details of Commands”.

Depending on the sending data (D400 to D403), the receiving data (D300 to D303) vary. The following describes the receiving data in case of example in “(1)Example of Send Data Setting”.

<table>
<tr><th>Command</th><th>Descriptions</th><th>Receiving data device No.</th><th>Setting data</th><th>Stored device No.</th></tr>
<tr><td rowspan="9">Data monitor</td><td rowspan="3">Phase 1 current</td><td>D300</td><td>Channel No., Group No.</td><td>-</td></tr>
<tr><td>D301</td><td>Index number.</td><td>R0</td></tr>
<tr><td>D302, D303</td><td>Receiving data</td><td>R1, R2</td></tr>
<tr><td rowspan="3">Total active power</td><td>D300</td><td>Channel No., Group No.</td><td>-</td></tr>
<tr><td>D301</td><td>Index number.</td><td>R0</td></tr>
<tr><td>D302, D303</td><td>Receiving data</td><td>R1, R2</td></tr>
<tr><td colspan="4">Index number
Depending on the index number (R0), the multiplicand of the measuring data varies.
The following table lists the description of index number.
<table>
<tr><th>Index number</th><th>Multiplicand</th><th>Remarks</th></tr>
<tr><td>03H</td><td>×10^{3}</td><td rowspan="8">Actual value = Numerical value × Multiplicand</td></tr>
<tr><td>02H</td><td>×10^{2}</td></tr>
<tr><td>01H</td><td>×10</td></tr>
<tr><td>00H</td><td>×1</td></tr>
<tr><td>FFH</td><td>×10^{-1}</td></tr>
<tr><td>FEH</td><td>×10^{-2}</td></tr>
<tr><td>FDH</td><td>×10^{-3}</td></tr>
<tr><td>FCH</td><td>×10^{-4}</td></tr>
<tr><td>FBH</td><td>×10^{-5}</td></tr>
</table>
On the basis of the index number, multiply the numerical value by the multiplicand in the host side. In details of index number and numerical value, refer to “7.2.2Details of Commands”.</td></tr>
<tr><td colspan="4">Receiving data</td></tr>
<tr><td colspan="4">Numerical value is 32-bit integer with a sign.
-2147483648～2147483647 (80000000H～7FFFFFFFH)</td></tr>
</table>

Command	Descriptions
Data Set	Data set is the command that changes setting data of ME96.The following is an example of modifying at a data set. 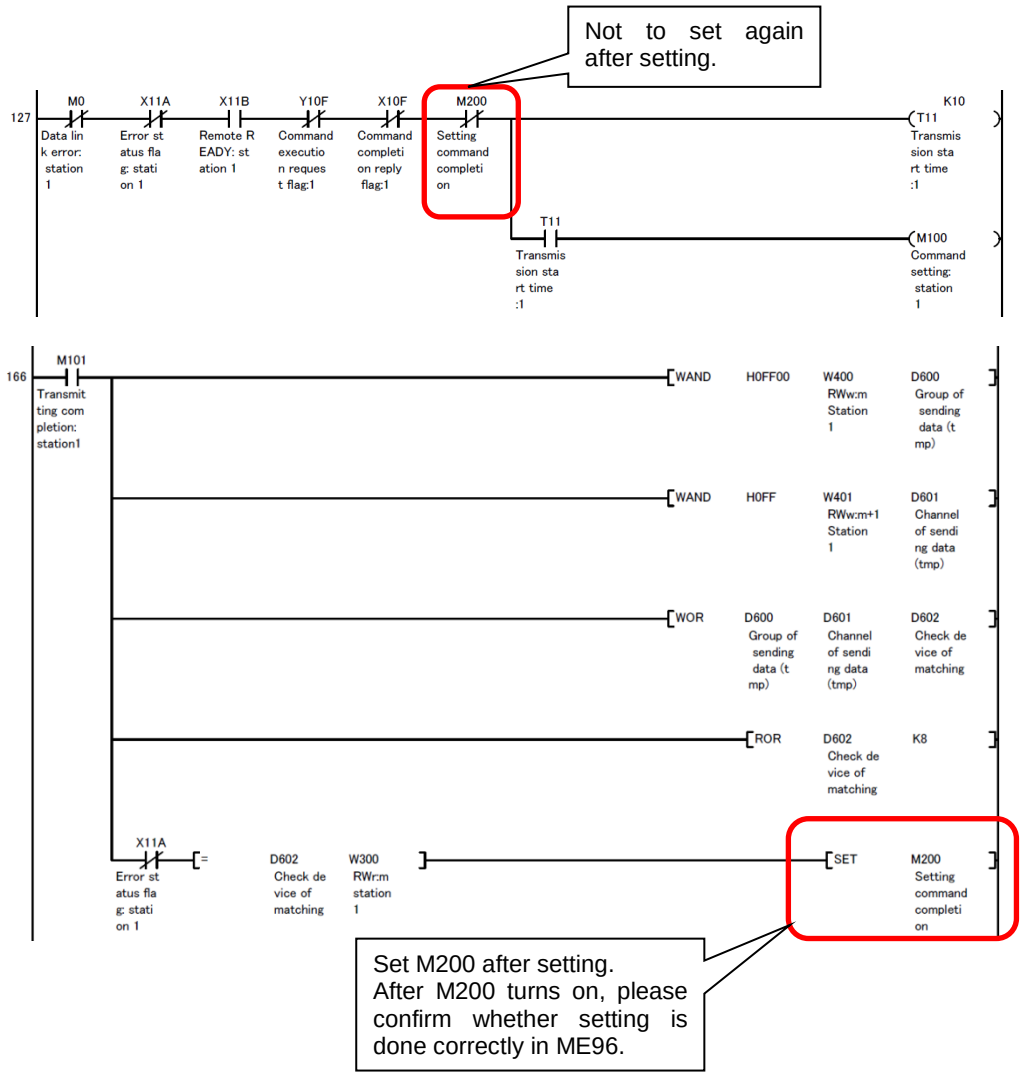

9.2 Program Example 2

9.2.1 Program Content

This section shows an example the program to monitor only active energy from a ME96 whose station number is 1. This program example is assumed the system configuration in below and the I/O number of the master station is X/Y00 to X/Y 1F.

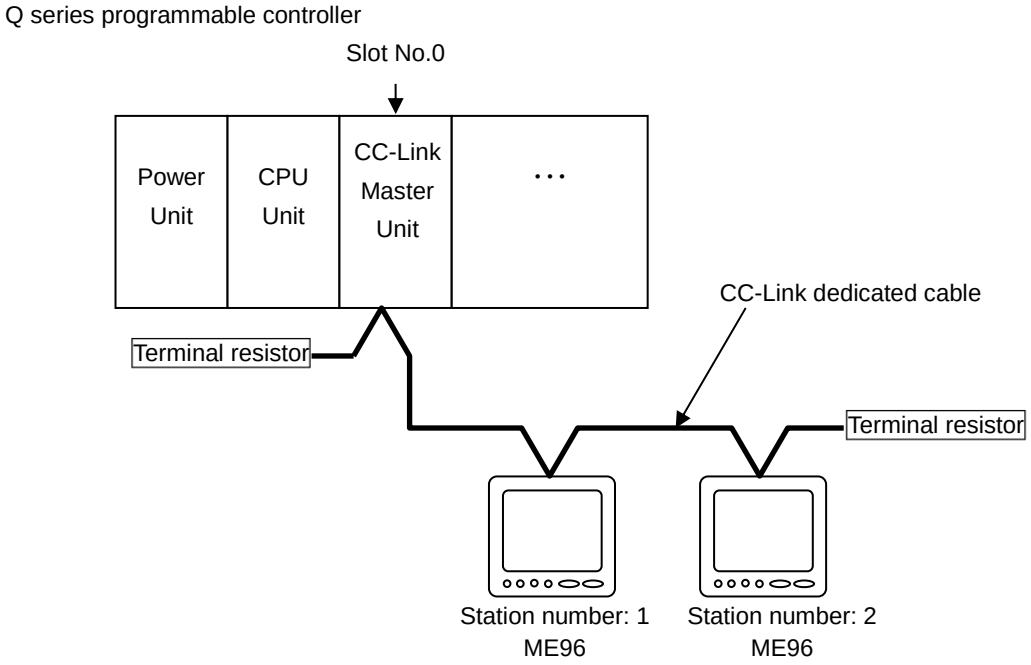

※Reading data

Station number 1: ME96	Phase 1 current, Phase 2 current, Phase 3 current, 1-2 voltage, 2-3 voltage, 3-1 voltage, Total active power, Active energy (import)
Station number 2: ME96	Phase 1 current, Phase 2 current, Phase 3 current, 1-2 voltage, 2-3 voltage, 3-1 voltage, Total power factor

9.2.2 Parameter Settings

Parameter settings are set as following with GX Developer.

(1) Network Parameter Settings and Auto Refresh Parameter Settings

The following is shown CC-Link network parameter settings and auto refresh parameter settings.

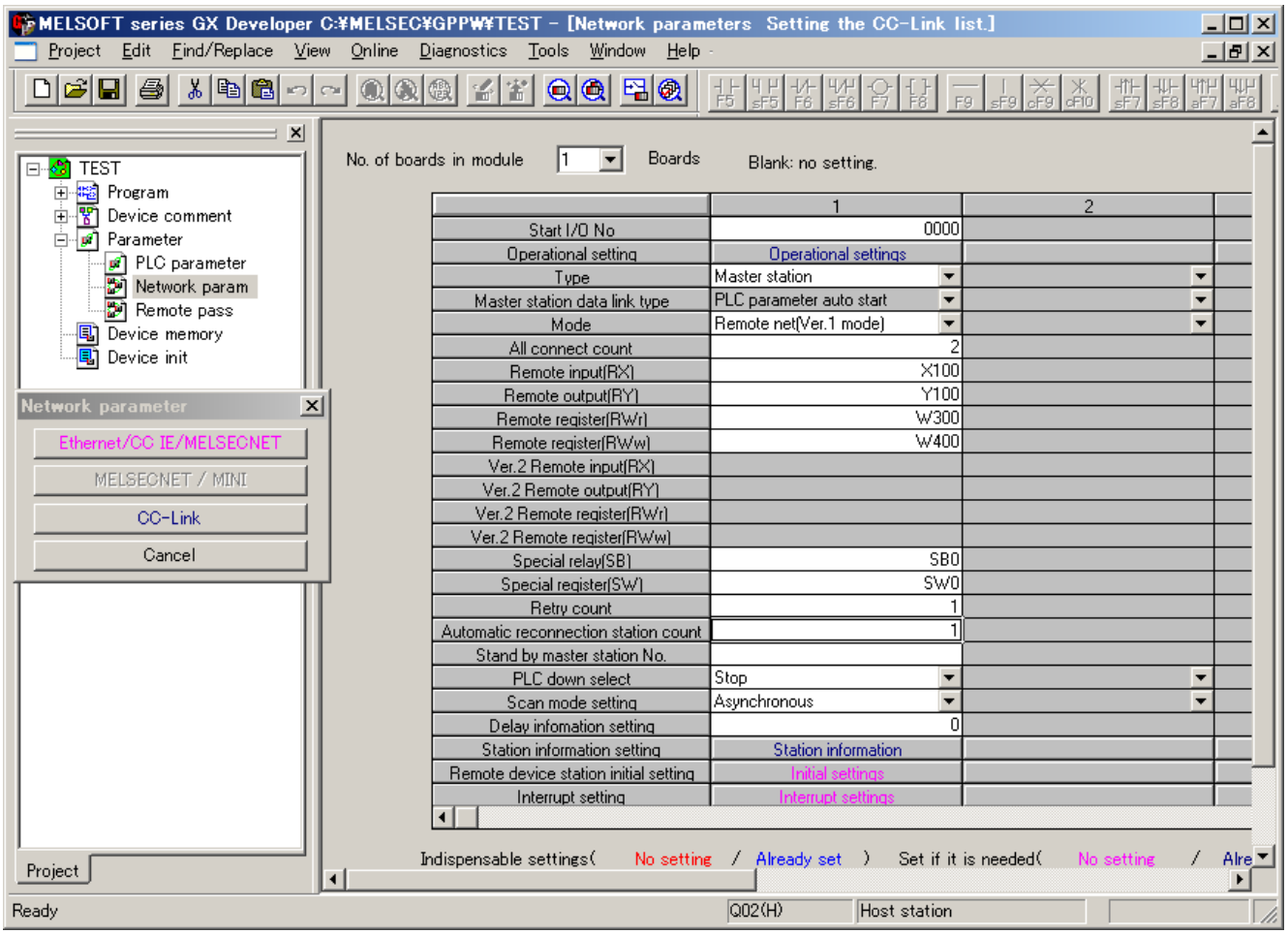

(2) Operational Settings

Operational settings are as follows.

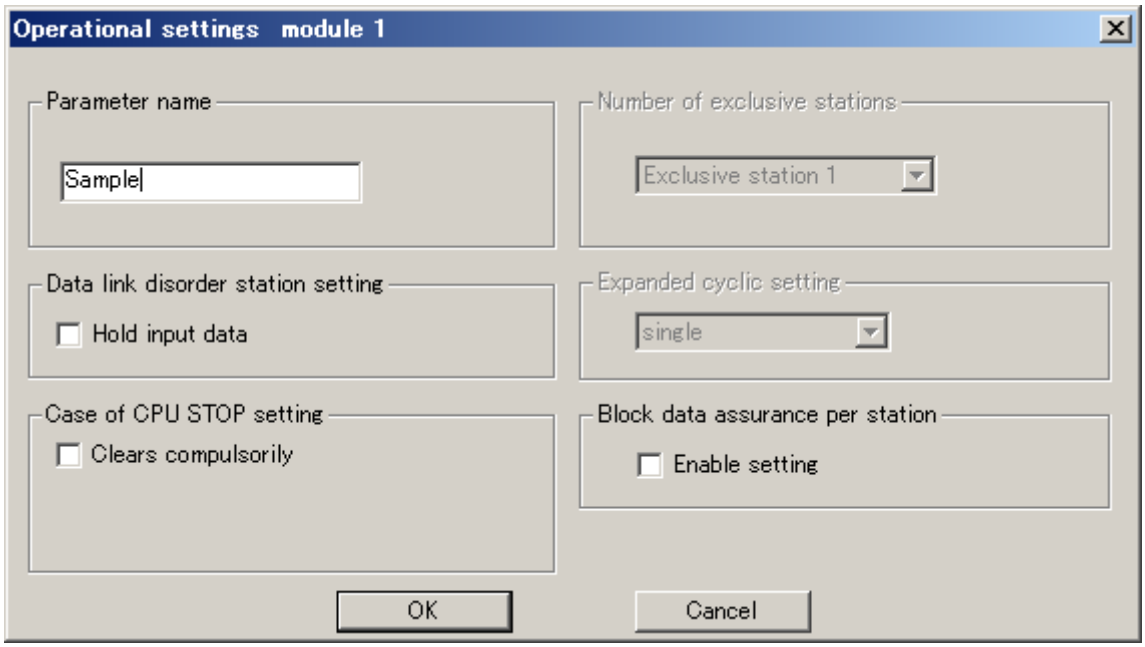

(3) Station Information Settings

Station information settings are as follows.

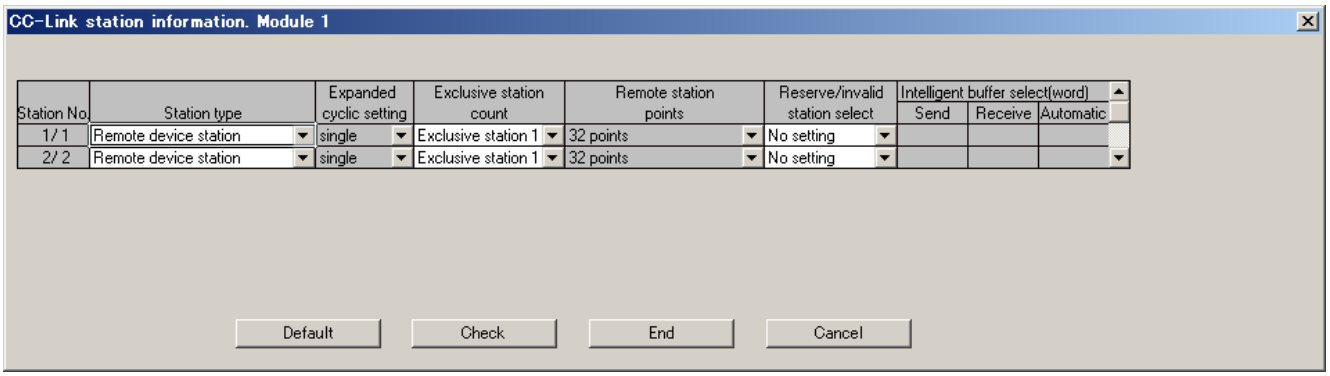

(4) File Register Settings

This program example uses file registers (R). The procedures of file register settings are as follows.

1) Double-click “PLC parameter”.
2) Select “PLC file”.
3) Select “Use the same file name as the program” or “Use the following file” and set the each item.

In details, refer to the manual for the CPU module used.

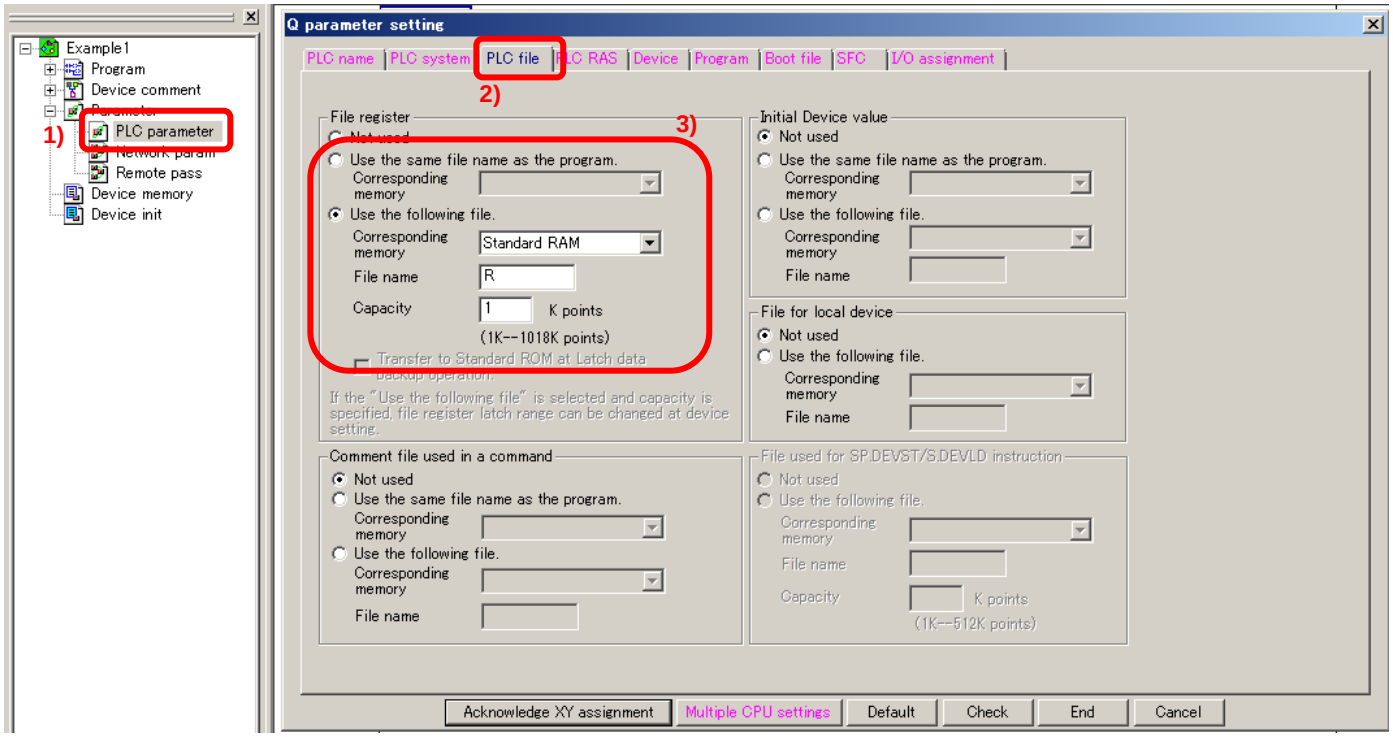

- If you use the CPU module which doesn’t have file registers (ex. Q00UJCPU), replace the file register (R) with other device (ex. Data register (D))

9.2.3 Device Allocation

The following table lists devices used above the example.

Items	Descriptions	Station No.	Device No.	Note
Remote input(RX)	Remote input (RX00 to RX1F)	1	X100 to X11F	Set X100 to remote input (RX) refresh device.
	Remote input (RX20 to RX3F)	2	X120 to X13F	
Remote output(RY)	Remote output (RY00 to RY1F)	1	Y100 to Y11F	Set Y100 to remote output (RY) refresh device.
	Remote output (RY20 to RY3F)	2	Y120 to Y13F	
Remote register(RWr)	Remote register(RWr0 to RWr3)	1	W300 to W303	Set W300 to remote register (RWr) refresh device.
	Remote register(RWr4 to RWr7)	2	W304 to W307	
Remote register(RWw)	Remote register (RWw0 to RWw3)	1	W400 to W403	Set W400 to remote register (RWw) refresh device.
	Remote register (RWw4 to RWw7)	2	W404 to W407	
Link special relay (SB)	Link special relay of master station (SB0 to SB01FF)	SB0 to SB01FF		Set SB0 to link special relay (SB) refresh device.
Link special register (SW)	Link special register of master station (SW0 to SW01FF)	SW0 to SW01FF		Set SW0 to link special register (SW) refresh device.
Number of taking items	Number of monitoring items	1	D0	Number of items is mentioned in section 9.2.1 :Program Content.
		2	D1	
Number of taken items	For calculation of number of taken items.	1	D10	
		2	D11	
Send data items	Send data for monitoring	1	D100 to D115	Content of items are mentioned in section 9.2.1 :Program Content.
		2	D120 to D133	
Writing sending data	Writing device of sending data	1	D400 to D403	
		2	D404 to D407	
Reading receiving data	Reading device of receiving data	1	D300 to D303	
		2	D304 to D307	
Error code	Error code receiving data.	1	D500 to D503	
		2	D504 to D504	
Checking device	Checking device for match/mismatch of sending data and receiving data.	1	D600 to D602	
		2	D604 to D606	
Monitor data	Index number of item 1	1	R0	
	Numerical value of item 1		R1, R2	
	to		to	
	Index number of item 8		R21	
	Numerical value of item 8		R22, R23	
	Index number of item 1	2	R40	
	Numerical value of item 1		R41, R42	
	to		to	
	Index number of item 7		R58	
	Numerical value of item 7		R59, R60	
Data link status	Data link status of each station.	1	M0	
		2	M1	
Command setting	Command setting completion flag.	1	M100	
		2	M110	
Transmitting completion	Transmitting completion flag.	1	M101	
		2	M111	
Select for receiving data	Index register for selecting of sending command.	1	Z0	
		2	Z2	
	Index register for selecting of storage location of receiving data.	1	Z1	
		2	Z3	

9.2.4 Program Example

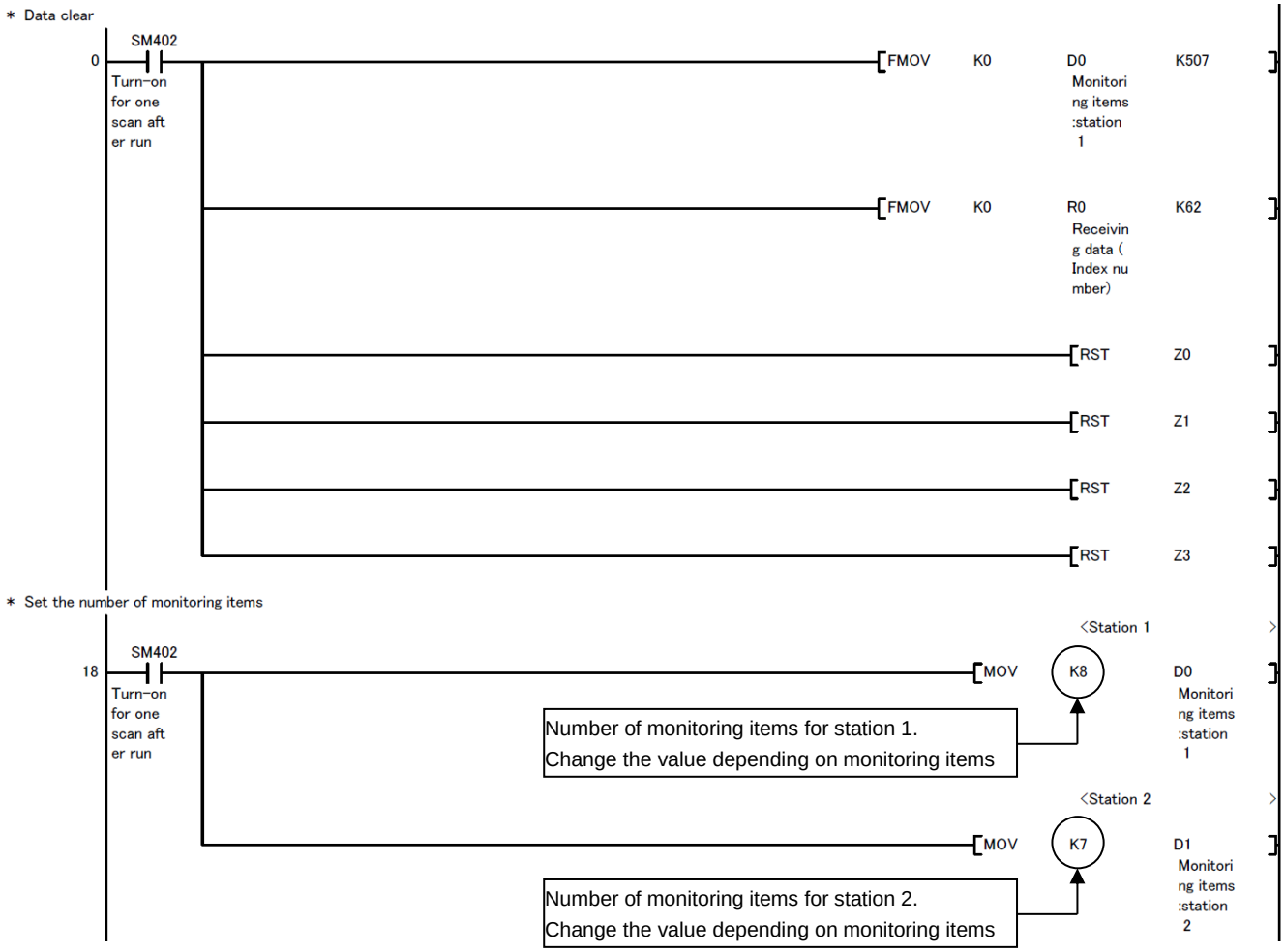

(Continued from the previous page)

* Set the sending data (station 1)

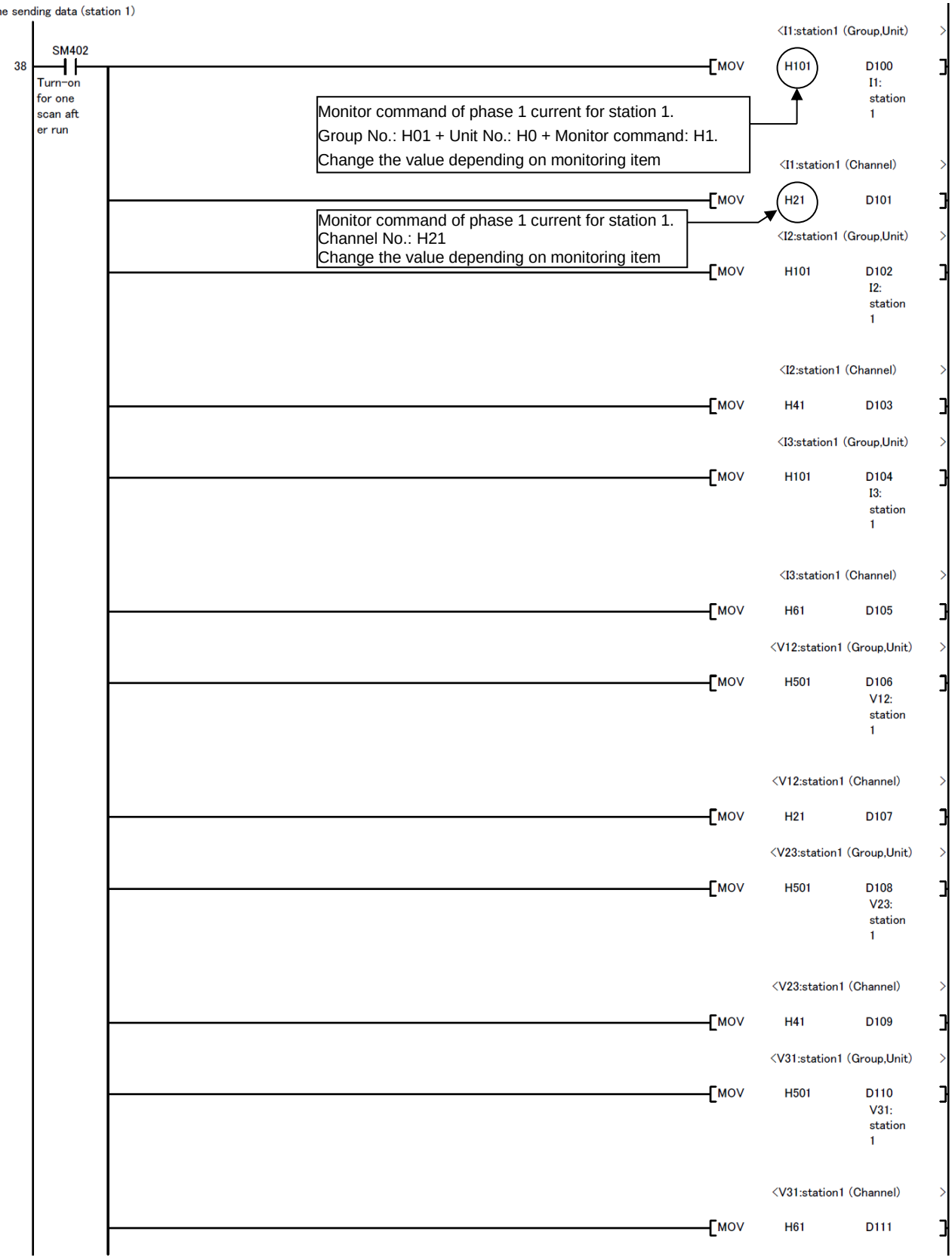

(Continued from the previous page)

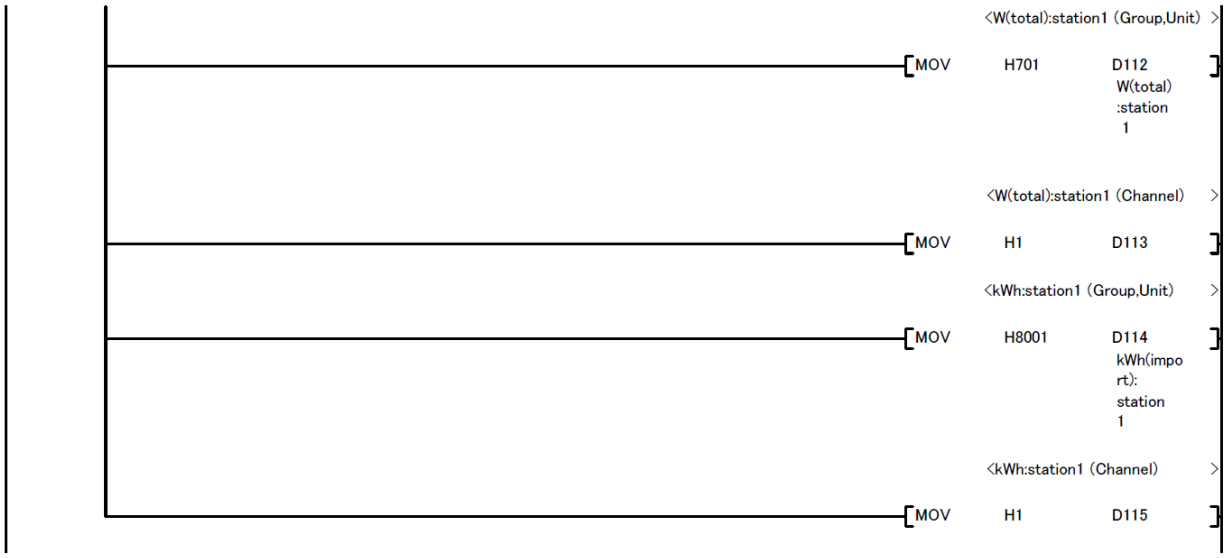

(Continued from the previous page)

* Set the sending data (station 2)

298 SM402 (Turn-on for one scan after run)

<I1:station2 (Group,Unit)>
MOV H101 D120 (I1: station 2)

<I1:station2 (Channel)>
MOV H21 D121

<I2:station2 (Group,Unit)>
MOV H101 D122 (I2: station 2)

<I2:station2 (Channel)>
MOV H41 D123

<I3:station2 (Group,Unit)>
MOV H101 D124 (I3: station 2)

<I3:station2 (Channel)>
MOV H61 D125

<V12:station2 (Group,Unit)>
MOV H501 D126 (V12: station 2)

<V12:station2 (Channel)>
MOV H21 D127

<V23:station2 (Group,Unit)>
MOV H501 D128 (V23: station 2)

<V23:station2 (Channel)>
MOV H41 D129

<V31:station2 (Group,Unit)>
MOV H501 D130 (V31: station 2)

<V31:station2 (Channel)>
MOV H61 D131

(Continued from the previous page)

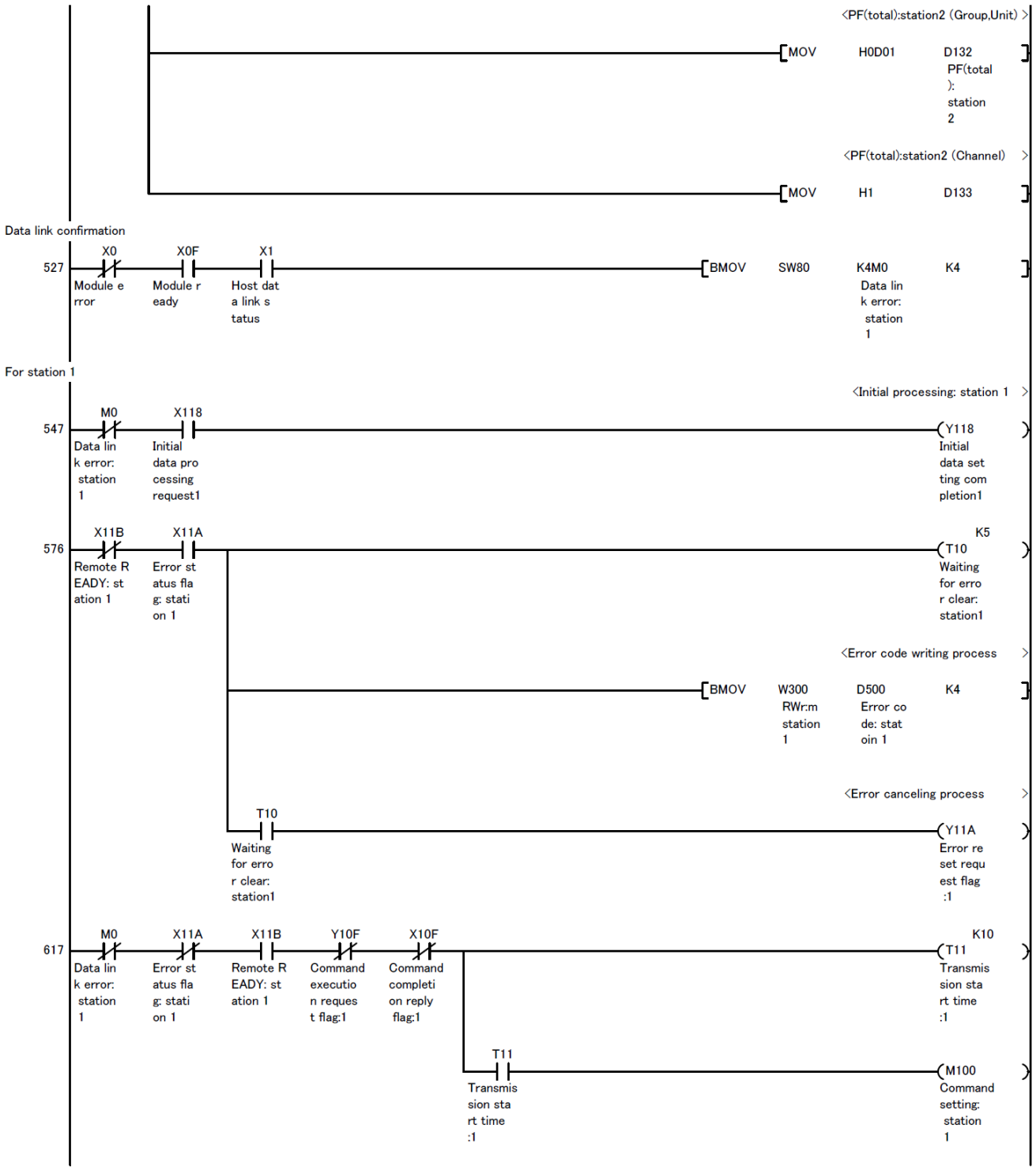

(Continued from the previous page)

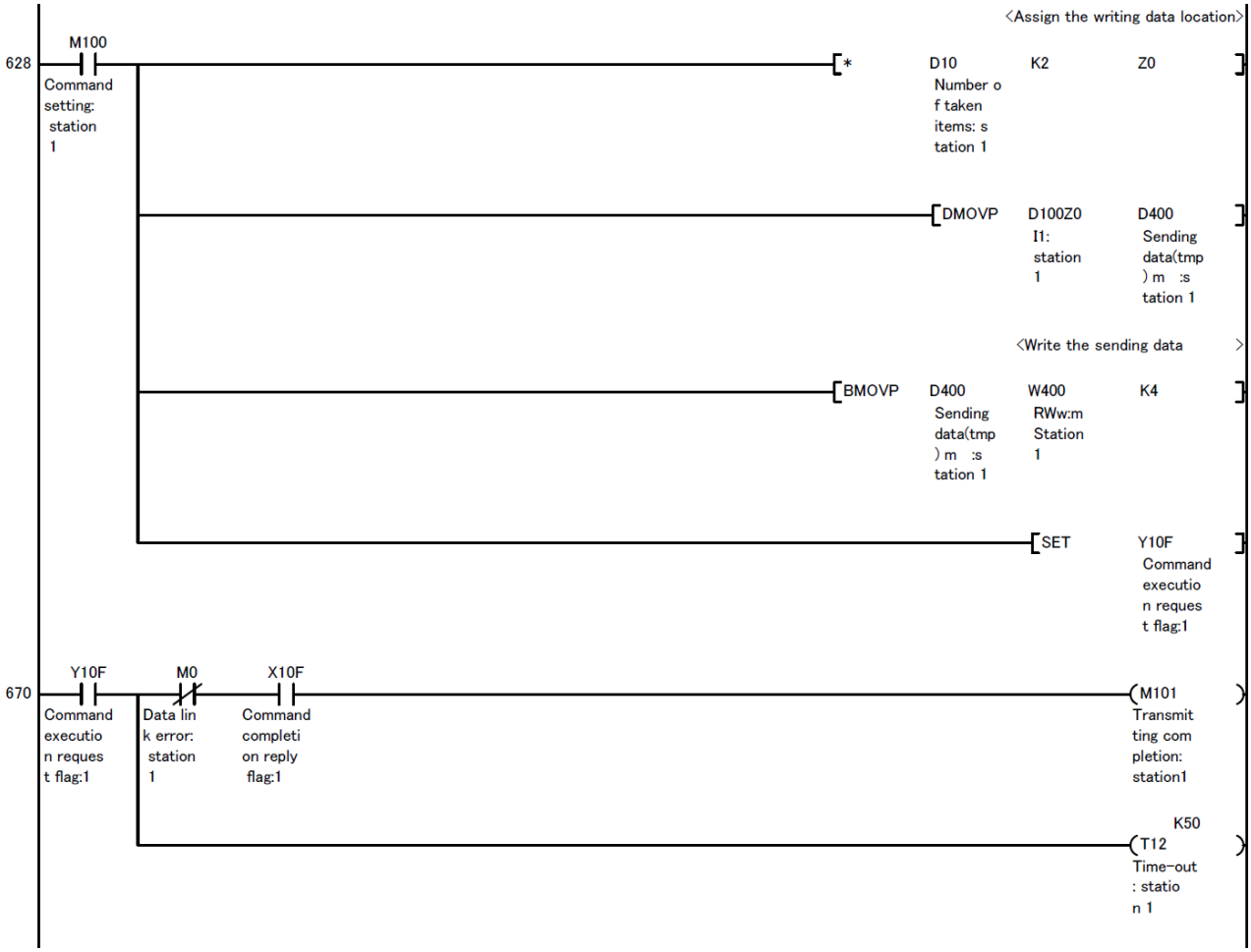

(Continued from the previous page)

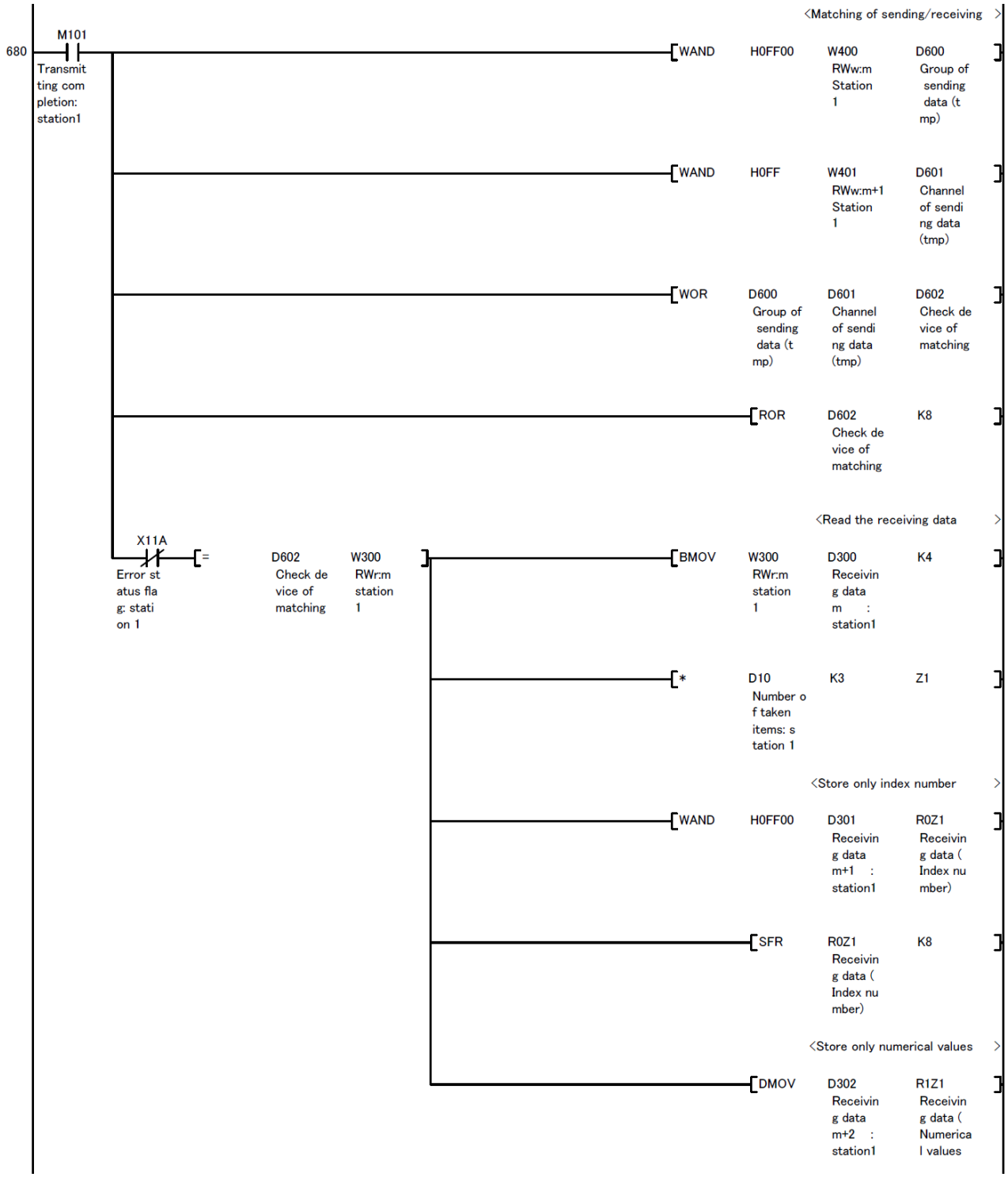

(Continued from the previous page)

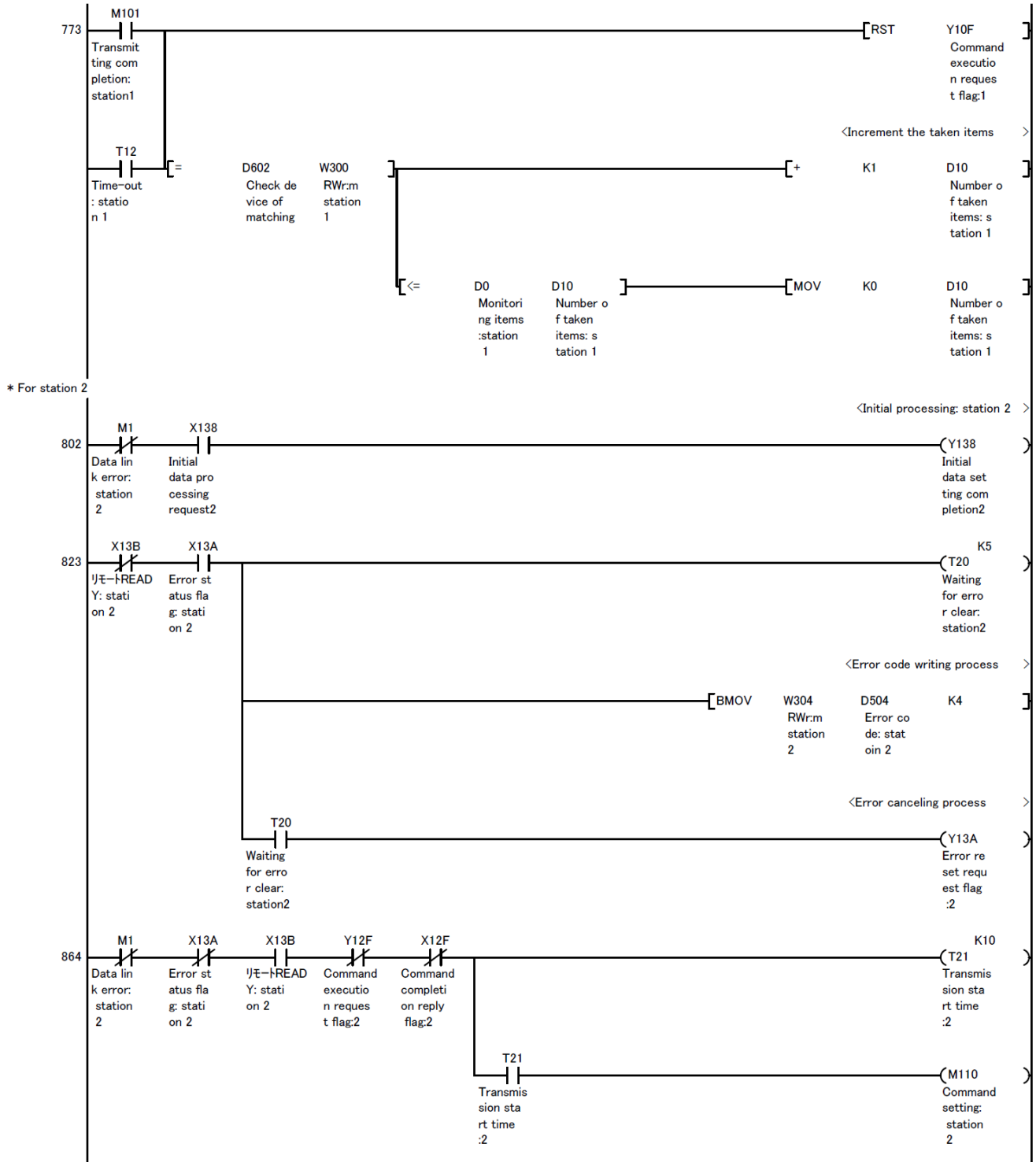

(Continued from the previous page)

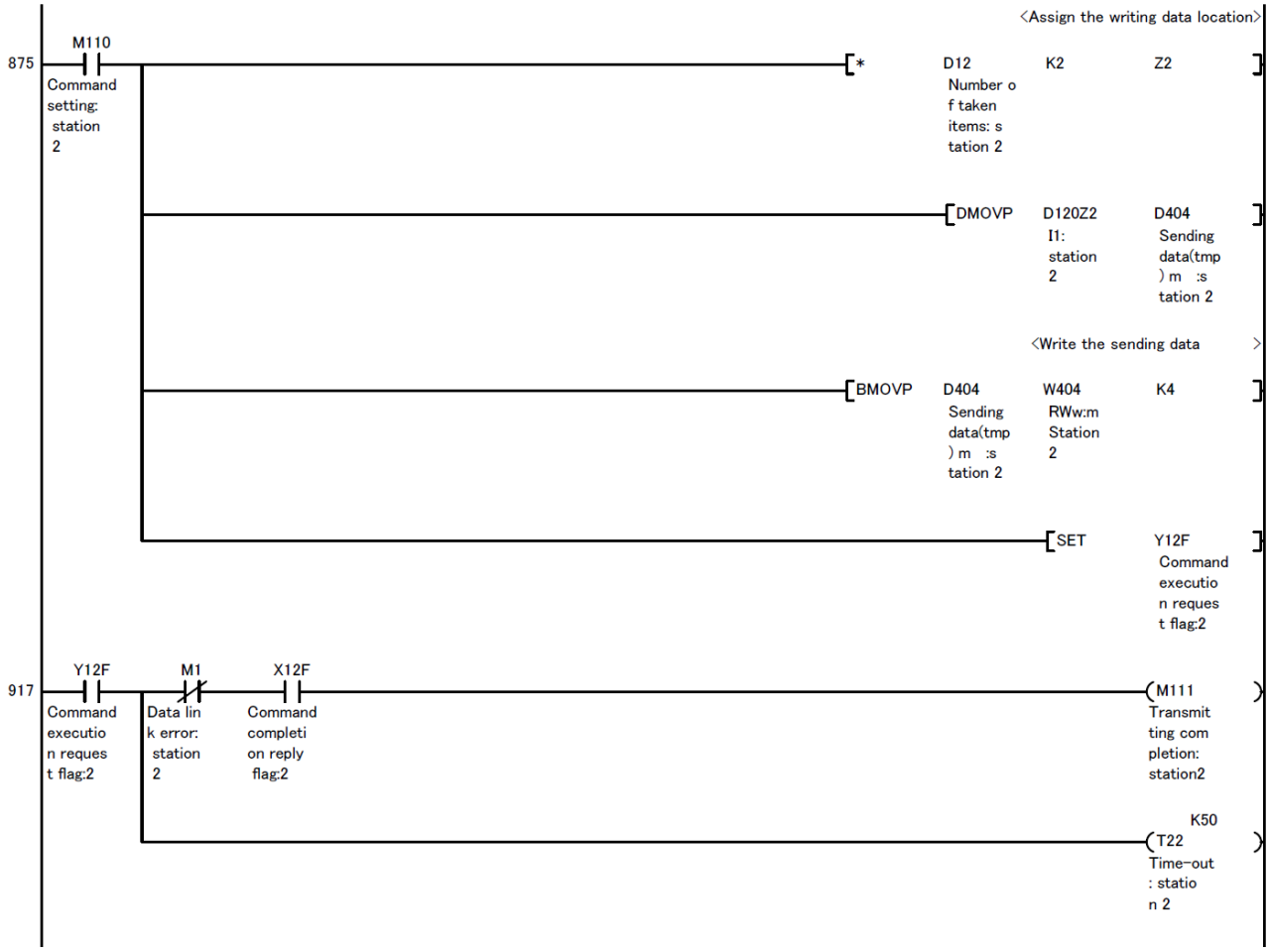

(Continued from the previous page)

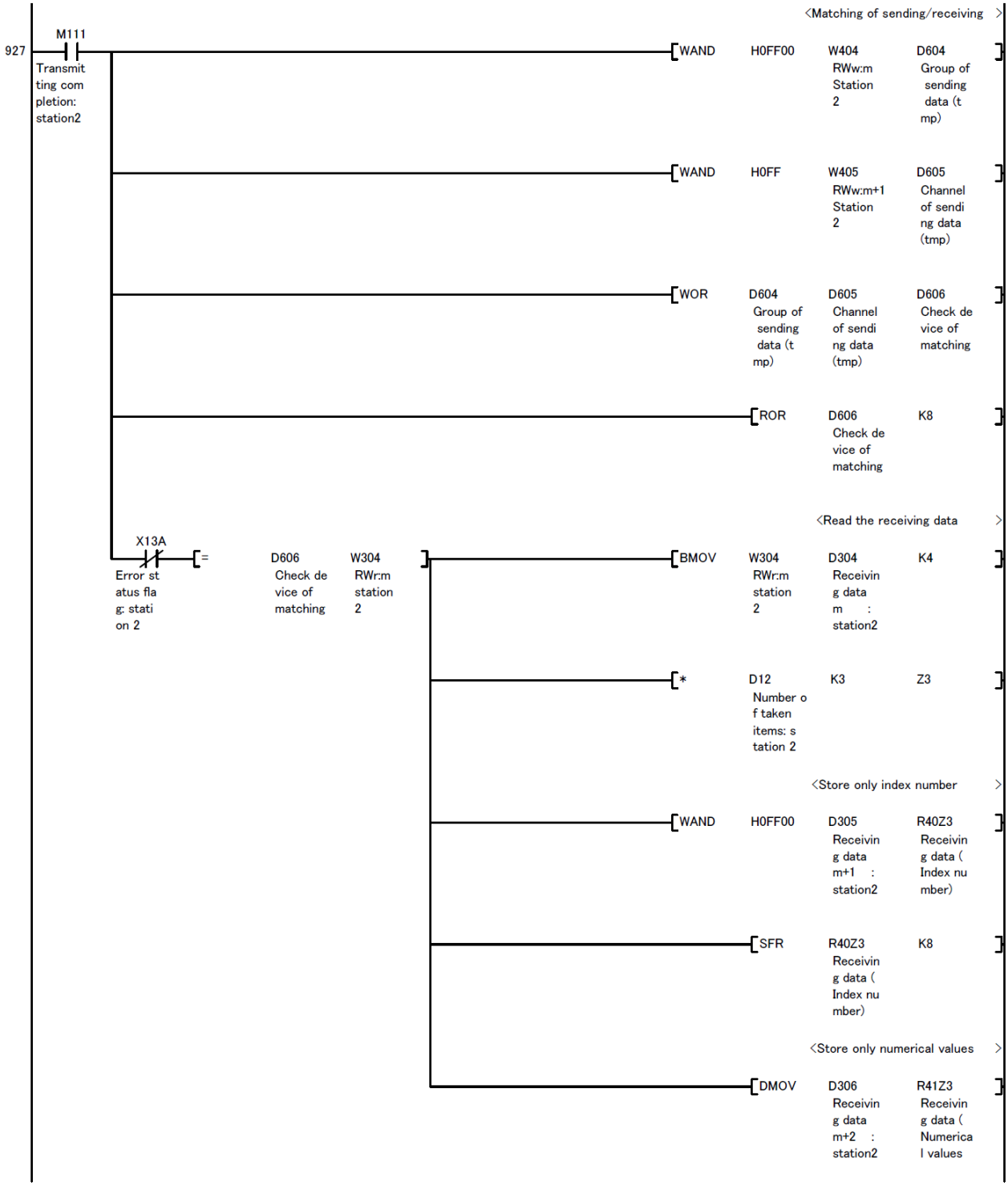

(Continued from the previous page)

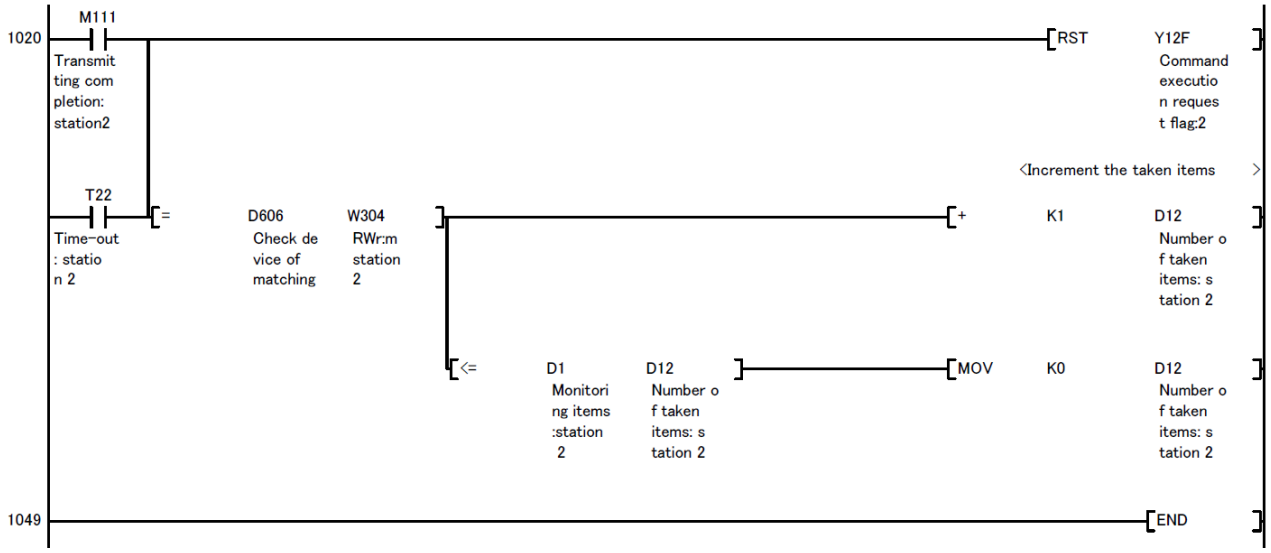

10. Test Mode

ME96 has the test mode which the fixed values are replied even if the voltage and current are not input. It can be used to check the communication to programmable controller.

10.1 ME96SSH/SSR/SSHA/SSRA/SSHB/SSRB-MB

(1) Shift to Test Mode

Operation of ME96 is necessary. At first, shifts to the setting value confirmation mode from the operation mode. And then, select “9” of menu number, and shifts to the test menu screen. And then, select “1” of menu number, and shifts to the test mode. (For details, refer to each user’s manual)

(2) How to Test

In the test mode, you need to appear values which wanted to monitor on the screen of ME96. For example, if you want to monitor the active power, you need to appear the active power on the screen of ME96.

① Replied Data

Values displayed on the screen of ME96 can be monitored by CC-Link communication. Measurement elements not displayed on the screen are zero (only power factor is 1.000). When DI1 to DI4 are used, it is also possible to monitor the digital input status.

② Display screen

In the same as the operating mode, items are displayed when making settings such as those for the display pattern. Maximum and minimum values can be displayed. (Cyclic function is invalid.)

③ Button Operations

Button	Operation
[DISPLAY]	Switch the measurement screen.
[PHASE]	Switch phase display. Switch between the harmonic RMS value and distortion ratio. (Available on the harmonics display screen)
[MAXMIN]	Enter/Exit the Max/Min value screen.
[+], [-]	Switch the item expressed with the bar graph. Switch the harmonic degree. (Available on the harmonics display screen)
[+]+[-] for 2 seconds	Change the units such as Wh, varh, and VAh.
[SET]	Test mode is finished and back to test menu screen.

* In details of valid operation, please refer each user’s manuals.

10.2 ME96NSR

(1) How to Test

To test, it is necessary to operate the basic device.
Operate as follows.

①At the state of power failure, turn on the power supply while pressing the DISPLAY of basic device.
②After display on the right is shown, operate the normal communication.
③Data shown in the next section is replied.

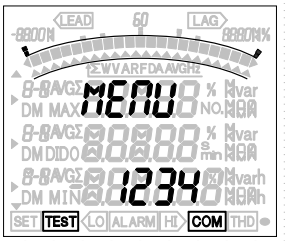

When the test is finished, turn off the power supply.

(2) Reply Data

The reply data at test function mode is shown in next page and on.
The reply data takes the value of primary side, but the data of table 10.1 describes the secondary side.
It is necessary to convert to the value of primary side using the VT ratio and CT ratio.

(Example)At three phase 3-wire, VT: 6600V/110V, CT: 100A/5A

・Phase 1 current (Inst.) ＝ reply data(secondary side)×CT ratio.
＝ 4.11A × 100A/5A ＝ 82.2A

・1-2 voltage (Inst.) ＝ reply data(secondary side)×VT ratio.
＝ 101.1V × 6600V/110V ＝ 6066V

・Total active power (Inst.) ＝ reply data(secondary side)×VT ratio×CT ratio.
＝ 1041W × 6600V/110V × 100A/5A ＝ 1249.2kW

Table 10.1 Reply data

Unit No.	Group (h)	Ch. (h)	Name of Channel			Data Type	3P4W reply data (Secondary side)		3P3W_2CT reply data (Secondary side)		3P3W_3CT reply data (Secondary side)		Note
							Data	Unit	Data	Unit	Data	Unit	
0	F0	2	Model code			⑤	—	—	—	—	—	—	
0	E0	11	Primary current			④	—	—	—	—	—	—	
0	E0	12	Primary voltage(L-L)			④	—	—	—	—	—	—	
0	E0	1B	Primary voltage（L-N）			④	—	—	—	—	—	—	
0	E0	1C	Secondary voltage（L-N）			④	—	—	—	—	—	—	
0	E0	13	Phase & Wiring			⑤	—	—	—	—	—	—	
0	E0	18	Alarm Items			⑥	—	—	—	—	—	—	
0	E0	19	Byte monitor			⑤	—	—	—	—	—	—	
0	E0	1A	reserved				—	—	—	—	—	—	
0	2	E0	Time constant for DA	sec.		⑤	—	—	—	—	—	—	
0	1	1	Average current	A	Inst.	①	4.31	A	4.41	A	4.31	A	
0	1	21	Phase 1 current	A	Inst.	①	4.11	A	4.11	A	4.11	A	
0	1	41	Phase 2 current	A	Inst.	①	4.21	A	4.51	A	4.21	A	
0	1	61	Phase 3 current	A	Inst.	①	4.61	A	4.61	A	4.61	A	
0	1	81	Phase N current	A	Inst.	①	4.51	A	—	—	—	—	
0	1	2	Average current	A	max.	①	4.32	A	4.42	A	4.32	A	
0	1	22	Phase 1 current	A	max.	①	4.12	A	4.12	A	4.12	A	
0	1	42	Phase 2 current	A	max.	①	4.22	A	4.52	A	4.22	A	
0	1	62	Phase 3 current	A	max.	①	4.62	A	4.62	A	4.62	A	
0	1	82	Phase N current	A	max.	①	4.52	A	—	—	—	—	
0	1	5	Average current	A	min.	①	4.30	A	4.40	A	4.30	A	
0	1	25	Phase 1 current	A	min.	①	4.10	A	4.10	A	4.10	A	
0	1	45	Phase 2 current	A	min.	①	4.20	A	4.50	A	4.20	A	
0	1	65	Phase 3 current	A	min.	①	4.60	A	4.60	A	4.60	A	
0	1	85	Phase N current	A	min.	①	4.50	A	—	—	—	—	
0	2	1	Average current demand	A	Inst.	①	4.31	A	4.41	A	4.31	A	
0	2	21	Phase 1 current demand	A	Inst.	①	4.11	A	4.11	A	4.11	A	
0	2	41	Phase 2 current demand	A	Inst.	①	4.21	A	4.51	A	4.21	A	
0	2	61	Phase 3 current demand	A	Inst.	①	4.61	A	4.61	A	4.61	A	
0	2	81	Phase N current demand	A	Inst.	①	4.51	A	—	—	—	—	
0	2	2	Average current demand	A	max.	①	4.32	A	4.42	A	4.32	A	
0	2	22	Phase 1 current demand	A	max.	①	4.12	A	4.12	A	4.12	A	
0	2	42	Phase 2 current demand	A	max.	①	4.22	A	4.52	A	4.22	A	
0	2	62	Phase 3 current demand	A	max.	①	4.62	A	4.62	A	4.62	A	
0	2	82	Phase N current demand	A	max.	①	4.52	A	—	—	—	—	
0	2	5	Average current demand	A	min.	①	4.30	A	4.40	A	4.30	A	
0	2	25	Phase 1 current demand	A	min.	①	4.10	A	4.10	A	4.10	A	
0	2	45	Phase 2 current demand	A	min.	①	4.20	A	4.50	A	4.20	A	
0	2	65	Phase 3 current demand	A	min.	①	4.60	A	4.60	A	4.60	A	
0	2	85	Phase N current demand	A	min.	①	4.50	A	—	—	—	—	
0	5	1	Average L-L voltage	V	Inst.	①	173.1	V	127.8	V	127.8	V	
0	5	21	1-2 voltage	V	Inst.	①	171.1	V	101.1	V	101.1	V	
0	5	41	2-3 voltage	V	Inst.	①	172.1	V	106.1	V	106.1	V	
0	5	61	3-1 voltage	V	Inst.	①	176.1	V	176.1	V	176.1	V	
0	5	2	Average L-L voltage	V	max.	①	173.2	V	127.9	V	127.9	V	
0	5	22	1-2 voltage	V	max.	①	171.2	V	101.2	V	101.2	V	
0	5	42	2-3 voltage	V	max.	①	172.2	V	106.2	V	106.2	V	
0	5	62	3-1 voltage	V	max.	①	176.2	V	176.2	V	176.2	V	
0	5	5	Average L-L voltage	V	min.	①	173.0	V	127.7	V	127.7	V	
0	5	25	1-2 voltage	V	min.	①	171.0	V	101.0	V	101.0	V	
0	5	45	2-3 voltage	V	min.	①	172.0	V	106.0	V	106.0	V	
0	5	65	3-1 voltage	V	min.	①	176.0	V	176.0	V	176.0	V	

Unit No.	Group (h)	Ch. (h)	Name of Channel			Data Type	3P4W reply data (Secondary side)		3P3W_2CT reply data (Secondary side)		3P3W_3CT reply data (Secondary side)		Note
							Data	Unit	Data	Unit	Data	Unit	
0	3	1	Average L-N voltage	V	Inst.	①	103.1	V	—	—	—	—	
0	3	21	1-N voltage	V	Inst.	①	101.1	V	—	—	—	—	
0	3	41	2-N voltage	V	Inst.	①	102.1	V	—	—	—	—	
0	3	61	3-N voltage	V	Inst.	①	106.1	V	—	—	—	—	
0	3	2	Average L-N voltage	V	max.	①	103.2	V	—	—	—	—	
0	3	22	1-N voltage	V	max.	①	101.2	V	—	—	—	—	
0	3	42	2-N voltage	V	max.	①	102.2	V	—	—	—	—	
0	3	62	3-N voltage	V	max.	①	106.2	V	—	—	—	—	
0	3	5	Average L-N voltage	V	min.	①	103.0	V	—	—	—	—	
0	3	25	1-N voltage	V	min.	①	101.0	V	—	—	—	—	
0	3	45	2-N voltage	V	min.	①	102.0	V	—	—	—	—	
0	3	65	3-N voltage	V	min.	①	106.0	V	—	—	—	—	
0	7	1	Total active power	kW	Inst.	①	1041	W	1041	W	1041	W	
0	7	21	Phase 1 active power	kW	Inst.	①	1011	W	—	—	—	—	
0	7	41	Phase 2 active power	kW	Inst.	①	1021	W	—	—	—	—	
0	7	61	Phase 3 active power	kW	Inst.	①	1031	W	—	—	—	—	
0	7	2	Total active power	kW	max.	①	1042	W	1042	W	1042	W	
0	7	22	Phase 1 active power	kW	max.	①	1012	W	—	—	—	—	
0	7	42	Phase 2 active power	kW	max.	①	1022	W	—	—	—	—	
0	7	62	Phase 3 active power	kW	max.	①	1032	W	—	—	—	—	
0	7	5	Total active power	kW	min.	①	1040	W	1040	W	1040	W	
0	7	25	Phase 1 active power	kW	min.	①	1010	W	—	—	—	—	
0	7	45	Phase 2 active power	kW	min.	①	1020	W	—	—	—	—	
0	7	65	Phase 3 active power	kW	min.	①	1030	W	—	—	—	—	
0	9	1	Total reactive power	kvar	Inst.	①	741	var	741	var	741	var	
0	9	21	Phase 1 reactive power	kvar	Inst.	①	711	var	—	—	—	—	
0	9	41	Phase 2 reactive power	kvar	Inst.	①	721	var	—	—	—	—	
0	9	61	Phase 3 reactive power	kvar	Inst.	①	731	var	—	—	—	—	
0	9	2	Total reactive power	kvar	max.	①	742	var	742	var	742	var	
0	9	22	Phase 1 reactive power	kvar	max.	①	712	var	—	—	—	—	
0	9	42	Phase 2 reactive power	kvar	max.	①	722	var	—	—	—	—	
0	9	62	Phase 3 reactive power	kvar	max.	①	732	var	—	—	—	—	
0	9	5	Total reactive power	kvar	min.	①	740	var	740	var	740	var	
0	9	25	Phase 1 reactive power	kvar	min.	①	710	var	—	—	—	—	
0	9	45	Phase 2 reactive power	kvar	min.	①	720	var	—	—	—	—	
0	9	65	Phase 3 reactive power	kvar	min.	①	730	var	—	—	—	—	
1	0B	1	Total apparent power	kVA	Inst.	①	1241	VA	—	—	—	—	
1	0B	21	Phase 1 apparent power	kVA	Inst.	①	1211	VA	—	—	—	—	
1	0B	41	Phase 2 apparent power	kVA	Inst.	①	1221	VA	—	—	—	—	
1	0B	61	Phase 3 apparent power	kVA	Inst.	①	1231	VA	—	—	—	—	
1	0B	2	Total apparent power	kVA	max.	①	1242	VA	—	—	—	—	
1	0B	22	Phase 1 apparent power	kVA	max.	①	1212	VA	—	—	—	—	
1	0B	42	Phase 2 apparent power	kVA	max.	①	1222	VA	—	—	—	—	
1	0B	62	Phase 3 apparent power	kVA	max.	①	1232	VA	—	—	—	—	
1	0B	5	Total apparent power	kVA	min.	①	1240	VA	—	—	—	—	
1	0B	25	Phase 1 apparent power	kVA	min.	①	1210	VA	—	—	—	—	
1	0B	45	Phase 2 apparent power	kVA	min.	①	1220	VA	—	—	—	—	
1	0B	65	Phase 3 apparent power	kVA	min.	①	1230	VA	—	—	—	—	

Unit No.	Group (h)	Ch. (h)	Name of Channel				Data Type	3P4W reply data (Secondary side)		3P3W_2CT reply data (Secondary side)		3P3W_3CT reply data (Secondary side)		Note
								Data	Unit	Data	Unit	Data	Unit	
0	0D	1	Total power factor	%	Inst.		①	84.1	%	84.1	%	84.1	%	
0	0D	21	Phase 1 power factor	%	Inst.		①	81.1	%	—	—	—	—	
0	0D	41	Phase 2 power factor	%	Inst.		①	82.1	%	—	—	—	—	
0	0D	61	Phase 3 power factor	%	Inst.		①	83.1	%	—	—	—	—	
0	0D	2	Total power factor	%	max.		①	84.0	%	84.0	%	84.0	%	
0	0D	22	Phase 1 power factor	%	max.		①	81.0	%	—	—	—	—	
0	0D	42	Phase 2 power factor	%	max.		①	81.9	%	—	—	—	—	
0	0D	62	Phase 3 power factor	%	max.		①	83.0	%	—	—	—	—	
0	0D	5	Total power factor	%	min.		①	84.2	%	84.2	%	84.2	%	
0	0D	25	Phase 1 power factor	%	min.		①	81.2	%	—	—	—	—	
0	0D	45	Phase 2 power factor	%	min.		①	82.2	%	—	—	—	—	
0	0D	65	Phase 3 power factor	%	min.		①	83.2	%	—	—	—	—	
0	0F	1	Frequency	Hz	Inst.		①	50.0	Hz	50.0	Hz	50.0	Hz	
0	0F	2	Frequency	Hz	max.		①	51.0	Hz	51.0	Hz	51.0	Hz	
0	0F	5	Frequency	Hz	min.		①	49.0	Hz	49.0	Hz	49.0	Hz	
0	63	21	1-2 H.V	V	Inst.	Total	①	—	—	78.9	V	78.9	V	
0	4D	21	1-2 H.V	V	Inst.	1st	①	—	—	91.1	V	91.1	V	
0	4F	21	1-2 H.V	V	Inst.	3rd	①	—	—	36.1	V	36.1	V	
0	51	21	1-2 H.V	V	Inst.	5th	①	—	—	35.1	V	35.1	V	
0	53	21	1-2 H.V	V	Inst.	7th	①	—	—	34.1	V	34.1	V	
0	55	21	1-2 H.V	V	Inst.	9th	①	—	—	33.1	V	33.1	V	
0	57	21	1-2 H.V	V	Inst.	11th	①	—	—	32.1	V	32.1	V	
0	59	21	1-2 H.V	V	Inst.	13th	①	—	—	20.1	V	20.1	V	
0	76	86	1-2 H.V D. ratio	%	Inst.	Total	①	—	—	86.6	%	86.6	%	
0	76	73	1-2 H.V D. ratio	%	Inst.	3rd	①	—	—	39.6	%	39.6	%	
0	76	75	1-2 H.V D. ratio	%	Inst.	5th	①	—	—	38.5	%	38.5	%	
0	76	77	1-2 H.V D. ratio	%	Inst.	7th	①	—	—	37.4	%	37.4	%	
0	76	79	1-2 H.V D. ratio	%	Inst.	9th	①	—	—	36.3	%	36.3	%	
0	76	7B	1-2 H.V D. ratio	%	Inst.	11th	①	—	—	35.2	%	35.2	%	
0	76	7D	1-2 H.V D. ratio	%	Inst.	13th	①	—	—	22.1	%	22.1	%	
0	63	41	2-3 H.V	V	Inst.	Total	①	—	—	79.3	V	79.3	V	
0	4D	41	2-3 H.V	V	Inst.	1st	①	—	—	91.3	V	91.3	V	
0	4F	41	2-3 H.V	V	Inst.	3rd	①	—	—	35.9	V	35.9	V	
0	51	41	2-3 H.V	V	Inst.	5th	①	—	—	34.9	V	34.9	V	
0	53	41	2-3 H.V	V	Inst.	7th	①	—	—	34.3	V	34.3	V	
0	55	41	2-3 H.V	V	Inst.	9th	①	—	—	33.3	V	33.3	V	
0	57	41	2-3 H.V	V	Inst.	11th	①	—	—	32.3	V	32.3	V	
0	59	41	2-3 H.V	V	Inst.	13th	①	—	—	21.3	V	21.3	V	
0	76	9C	2-3 H.V D. ratio	%	Inst.	Total	①	—	—	86.9	%	86.9	%	
0	76	89	2-3 H.V D. ratio	%	Inst.	3rd	①	—	—	39.3	%	39.3	%	
0	76	8B	2-3 H.V D. ratio	%	Inst.	5th	①	—	—	38.2	%	38.2	%	
0	76	8D	2-3 H.V D. ratio	%	Inst.	7th	①	—	—	37.6	%	37.6	%	
0	76	8F	2-3 H.V D. ratio	%	Inst.	9th	①	—	—	36.5	%	36.5	%	
0	76	91	2-3 H.V D. ratio	%	Inst.	11th	①	—	—	35.4	%	35.4	%	
0	76	93	2-3 H.V D. ratio	%	Inst.	13th	①	—	—	23.3	%	23.3	%	
0	76	DE	L-L H.V D. ratio	%	max.	Total	①	—	—	91.7	%	91.7	%	
0	4D	A2	L-L H.V	V	max.	1st	①	—	—	91.8	V	91.8	V	
0	76	CB	L-L H.V D. ratio	%	max.	3rd	①	—	—	40.1	%	40.1	%	
0	76	CD	L-L H.V D. ratio	%	max.	5th	①	—	—	39.1	%	39.1	%	
0	76	CF	L-L H.V D. ratio	%	max.	7th	①	—	—	37.9	%	37.9	%	
0	76	D1	L-L H.V D. ratio	%	max.	9th	①	—	—	36.8	%	36.8	%	
0	76	D3	L-L H.V D. ratio	%	max.	11th	①	—	—	35.7	%	35.7	%	
0	76	D5	L-L H.V D. ratio	%	max.	13th	①	—	—	34.6	%	34.6	%	

Unit No.	Group (h)	Ch. (h)	Name of Channel				Data Type	3P4W reply data (Secondary side)		3P3W_2CT reply data (Secondary side)		3P3W_3CT reply data (Secondary side)		Note
								Data	Unit	Data	Unit	Data	Unit	
0	4B	21	1-N H.V	V	Inst.	Total	①	78.9	V	—	—	—	—	
0	35	21	1-N H.V	V	Inst.	1st	①	91.1	V	—	—	—	—	
1	37	21	1-N H.V	V	Inst.	3rd	①	36.1	V	—	—	—	—	
1	39	21	1-N H.V	V	Inst.	5th	①	35.1	V	—	—	—	—	
1	3B	21	1-N H.V	V	Inst.	7th	①	34.1	V	—	—	—	—	
1	3D	21	1-N H.V	V	Inst.	9th	①	33.1	V	—	—	—	—	
1	3F	21	1-N H.V	V	Inst.	11th	①	32.1	V	—	—	—	—	
1	41	21	1-N H.V	V	Inst.	13th	①	20.1	V	—	—	—	—	
0	77	86	1-N H.V D. ratio	%	Inst.	Total	①	86.6	%	—	—	—	—	
0	77	73	1-N H.V D. ratio	%	Inst.	3rd	①	39.6	%	—	—	—	—	
0	77	75	1-N H.V D. ratio	%	Inst.	5th	①	38.5	%	—	—	—	—	
0	77	77	1-N H.V D. ratio	%	Inst.	7th	①	37.4	%	—	—	—	—	
0	77	79	1-N H.V D. ratio	%	Inst.	9th	①	36.3	%	—	—	—	—	
0	77	7B	1-N H.V D. ratio	%	Inst.	11th	①	35.2	%	—	—	—	—	
0	77	7D	1-N H.V D. ratio	%	Inst.	13th	①	22.1	%	—	—	—	—	
0	4B	41	2-N H.V	V	Inst.	Total	①	73.2	V	—	—	—	—	
0	35	41	2-N H.V	V	Inst.	1st	①	91.2	V	—	—	—	—	
1	37	41	2-N H.V	V	Inst.	3rd	①	36.2	V	—	—	—	—	
1	39	41	2-N H.V	V	Inst.	5th	①	16.8	V	—	—	—	—	
1	3B	41	2-N H.V	V	Inst.	7th	①	34.2	V	—	—	—	—	
1	3D	41	2-N H.V	V	Inst.	9th	①	33.2	V	—	—	—	—	
1	3F	41	2-N H.V	V	Inst.	11th	①	32.2	V	—	—	—	—	
1	41	41	2-N H.V	V	Inst.	13th	①	21.2	V	—	—	—	—	
0	77	9C	2-N H.V D. ratio	%	Inst.	Total	①	80.2	%	—	—	—	—	
0	77	89	2-N H.V D. ratio	%	Inst.	3rd	①	39.7	%	—	—	—	—	
0	77	8B	2-N H.V D. ratio	%	Inst.	5th	①	18.4	%	—	—	—	—	
0	77	8D	2-N H.V D. ratio	%	Inst.	7th	①	37.5	%	—	—	—	—	
0	77	8F	2-N H.V D. ratio	%	Inst.	9th	①	36.4	%	—	—	—	—	
0	77	91	2-N H.V D. ratio	%	Inst.	11th	①	35.3	%	—	—	—	—	
0	77	93	2-N H.V D. ratio	%	Inst.	13th	①	23.2	%	—	—	—	—	
0	4B	61	3-N H.V	V	Inst.	Total	①	79.3	V	—	—	—	—	
0	35	61	3-N H.V	V	Inst.	1st	①	91.3	V	—	—	—	—	
1	37	61	3-N H.V	V	Inst.	3rd	①	35.9	V	—	—	—	—	
1	39	61	3-N H.V	V	Inst.	5th	①	34.9	V	—	—	—	—	
1	3B	61	3-N H.V	V	Inst.	7th	①	34.3	V	—	—	—	—	
1	3D	61	3-N H.V	V	Inst.	9th	①	33.3	V	—	—	—	—	
1	3F	61	3-N H.V	V	Inst.	11th	①	32.3	V	—	—	—	—	
1	41	61	3-N H.V	V	Inst.	13th	①	21.3	V	—	—	—	—	
0	77	B2	3-N H.V D. ratio	%	Inst.	Total	①	86.9	%	—	—	—	—	
0	77	9F	3-N H.V D. ratio	%	Inst.	3rd	①	39.3	%	—	—	—	—	
0	77	A1	3-N H.V D. ratio	%	Inst.	5th	①	38.2	%	—	—	—	—	
0	77	A3	3-N H.V D. ratio	%	Inst.	7th	①	37.6	%	—	—	—	—	
0	77	A5	3-N H.V D. ratio	%	Inst.	9th	①	36.5	%	—	—	—	—	
0	77	A7	3-N H.V D. ratio	%	Inst.	11th	①	35.4	%	—	—	—	—	
0	77	A9	3-N H.V D. ratio	%	Inst.	13th	①	23.3	%	—	—	—	—	
0	77	DE	L-N H.V D. ratio	%	max.	Total	①	91.7	%	—	—	—	—	
0	35	A2	L-N H.V	V	max.	1st	①	91.8	V	—	—	—	—	
0	77	CB	L-N H.V D. ratio	%	max.	3rd	①	40.1	%	—	—	—	—	
0	77	CD	L-N H.V D. ratio	%	max.	5th	①	39.1	%	—	—	—	—	
0	77	CF	L-N H.V D. ratio	%	max.	7th	①	37.9	%	—	—	—	—	
0	77	D1	L-N H.V D. ratio	%	max.	9th	①	36.8	%	—	—	—	—	
0	77	D3	L-N H.V D. ratio	%	max.	11th	①	35.7	%	—	—	—	—	
0	77	D5	L-N H.V D. ratio	%	max.	13th	①	34.6	%	—	—	—	—	

Unit No.	Group (h)	Ch. (h)	Name of Channel				Data Type	3P4W reply data (Secondary side)		3P3W_2CT reply data (Secondary side)		3P3W_3CT reply data (Secondary side)		Note
								Data	Unit	Data	Unit	Data	Unit	
0	33	21	Phase 1 H.A	A	Inst.	Total	①	3.15	A	3.15	A	3.15	A	
0	1D	21	Phase 1 H.A	A	Inst.	1st	①	3.71	A	3.71	A	3.71	A	
0	1F	21	Phase 1 H.A	A	Inst.	3rd	①	1.63	A	1.63	A	1.63	A	
0	21	21	Phase 1 H.A	A	Inst.	5th	①	1.48	A	1.48	A	1.48	A	
0	23	21	Phase 1 H.A	A	Inst.	7th	①	1.34	A	1.34	A	1.34	A	
0	25	21	Phase 1 H.A	A	Inst.	9th	①	1.19	A	1.19	A	1.19	A	
0	27	21	Phase 1 H.A	A	Inst.	11th	①	1.04	A	1.04	A	1.04	A	
0	29	21	Phase 1 H.A	A	Inst.	13th	①	0.89	A	0.89	A	0.89	A	
0	75	86	Phase 1 H.A D. ratio	%	Inst.	Total	①	84.9	%	84.9	%	84.9	%	
1	75	73	Phase 1 H.A D. ratio	%	Inst.	3rd	①	43.9	%	43.9	%	43.9	%	
1	75	75	Phase 1 H.A D. ratio	%	Inst.	5th	①	39.9	%	39.9	%	39.9	%	
1	75	77	Phase 1 H.A D. ratio	%	Inst.	7th	①	36.1	%	36.1	%	36.1	%	
1	75	79	Phase 1 H.A D. ratio	%	Inst.	9th	①	32.1	%	32.1	%	32.1	%	
1	75	7B	Phase 1 H.A D. ratio	%	Inst.	11th	①	28.0	%	28.0	%	28.0	%	
1	75	7D	Phase 1 H.A D. ratio	%	Inst.	13th	①	24.0	%	24.0	%	24.0	%	
0	33	41	Phase 2 H.A	A	Inst.	Total	①	3.07	A	2.92	A	3.07	A	
0	1D	41	Phase 2 H.A	A	Inst.	1st	①	3.72	A	3.75	A	3.72	A	
0	1F	41	Phase 2 H.A	A	Inst.	3rd	①	1.60	A	1.54	A	1.60	A	
0	21	41	Phase 2 H.A	A	Inst.	5th	①	1.45	A	1.39	A	1.45	A	
0	23	41	Phase 2 H.A	A	Inst.	7th	①	1.30	A	1.24	A	1.30	A	
0	25	41	Phase 2 H.A	A	Inst.	9th	①	1.15	A	1.09	A	1.15	A	
0	27	41	Phase 2 H.A	A	Inst.	11th	①	1.00	A	0.94	A	1.00	A	
0	29	41	Phase 2 H.A	A	Inst.	13th	①	0.86	A	0.79	A	0.86	A	
0	75	9C	Phase 2 H.A D. ratio	%	Inst.	Total	①	82.5	%	77.9	%	82.5	%	
1	75	89	Phase 2 H.A D. ratio	%	Inst.	3rd	①	43.0	%	41.1	%	43.0	%	
1	75	8B	Phase 2 H.A D. ratio	%	Inst.	5th	①	39.0	%	37.1	%	39.0	%	
1	75	8D	Phase 2 H.A D. ratio	%	Inst.	7th	①	34.9	%	33.1	%	34.9	%	
1	75	8F	Phase 2 H.A D. ratio	%	Inst.	9th	①	30.9	%	29.1	%	30.9	%	
1	75	91	Phase 2 H.A D. ratio	%	Inst.	11th	①	26.9	%	25.1	%	26.9	%	
1	75	93	Phase 2 H.A D. ratio	%	Inst.	13th	①	23.1	%	21.1	%	23.1	%	
0	33	61	Phase 3 H.A	A	Inst.	Total	①	2.99	A	2.99	A	2.99	A	
0	1D	61	Phase 3 H.A	A	Inst.	1st	①	3.73	A	3.73	A	3.73	A	
0	1F	61	Phase 3 H.A	A	Inst.	3rd	①	1.57	A	1.57	A	1.57	A	
0	21	61	Phase 3 H.A	A	Inst.	5th	①	1.42	A	1.42	A	1.42	A	
0	23	61	Phase 3 H.A	A	Inst.	7th	①	1.27	A	1.27	A	1.27	A	
0	25	61	Phase 3 H.A	A	Inst.	9th	①	1.12	A	1.12	A	1.12	A	
0	27	61	Phase 3 H.A	A	Inst.	11th	①	0.97	A	0.97	A	0.97	A	
0	29	61	Phase 3 H.A	A	Inst.	13th	①	0.82	A	0.82	A	0.82	A	
0	75	B2	Phase 3 H.A D. ratio	%	Inst.	Total	①	80.3	%	80.3	%	80.3	%	
1	75	9F	Phase 3 H.A D. ratio	%	Inst.	3rd	①	42.1	%	42.1	%	42.1	%	
1	75	A1	Phase 3 H.A D. ratio	%	Inst.	5th	①	38.1	%	38.1	%	38.1	%	
1	75	A3	Phase 3 H.A D. ratio	%	Inst.	7th	①	34.0	%	34.0	%	34.0	%	
1	75	A5	Phase 3 H.A D. ratio	%	Inst.	9th	①	30.0	%	30.0	%	30.0	%	
1	75	A7	Phase 3 H.A D. ratio	%	Inst.	11th	①	26.0	%	26.0	%	26.0	%	
1	75	A9	Phase 3 H.A D. ratio	%	Inst.	13th	①	22.0	%	22.0	%	22.0	%	
0	33	81	Phase N H.A	A	Inst.	Total	①	2.92	A	—	—	—	—	
0	1D	81	Phase N H.A	A	Inst.	1st	①	3.75	A	—	—	—	—	
0	1F	81	Phase N H.A	A	Inst.	3rd	①	1.54	A	—	—	—	—	
0	21	81	Phase N H.A	A	Inst.	5th	①	1.39	A	—	—	—	—	
0	23	81	Phase N H.A	A	Inst.	7th	①	1.24	A	—	—	—	—	
0	25	81	Phase N H.A	A	Inst.	9th	①	1.09	A	—	—	—	—	
0	27	81	Phase N H.A	A	Inst.	11th	①	0.94	A	—	—	—	—	
0	29	81	Phase N H.A	A	Inst.	13th	①	0.79	A	—	—	—	—	
0	75	C8	Phase N H.A D. ratio	%	Inst.	Total	①	77.9	%	—	—	—	—	
1	75	B5	Phase N H.A D. ratio	%	Inst.	3rd	①	41.1	%	—	—	—	—	
1	75	B7	Phase N H.A D. ratio	%	Inst.	5th	①	37.1	%	—	—	—	—	
1	75	B9	Phase N H.A D. ratio	%	Inst.	7th	①	33.1	%	—	—	—	—	
1	75	BB	Phase N H.A D. ratio	%	Inst.	9th	①	29.1	%	—	—	—	—	
1	75	BD	Phase N H.A D. ratio	%	Inst.	11th	①	25.1	%	—	—	—	—	
1	75	BF	Phase N H.A D. ratio	%	Inst.	13th	①	21.1	%	—	—	—	—	

Unit No.	Group (h)	Ch. (h)	Name of Channel				Data Type	3P4W reply data (Secondary side)		3P3W_2CT reply data (Secondary side)		3P3W_3CT reply data (Secondary side)		Note
								Data	Unit	Data	Unit	Data	Unit	
0	33	A2	H.A	A	max.	Total	①	3.48	A	3.51	A	3.48	A	
0	1D	A2	H.A	A	max.	1st	①	3.76	A	3.77	A	3.76	A	
0	1F	A2	H.A	A	max.	3rd	①	1.66	A	1.67	A	1.66	A	
0	21	A2	H.A	A	max.	5th	①	1.56	A	1.58	A	1.56	A	
0	23	A2	H.A	A	max.	7th	①	1.46	A	1.47	A	1.46	A	
0	25	A2	H.A	A	max.	9th	①	1.36	A	1.37	A	1.36	A	
0	27	A2	H.A	A	max.	11th	①	1.26	A	1.28	A	1.26	A	
0	29	A2	H.A	A	max.	13th	①	1.16	A	1.17	A	1.16	A	
1	33	82	Phase N H.A	A	max.	Total	①	3.51	A	—	—	—	—	
1	1D	82	Phase N H.A	A	max.	1st	①	3.77	A	—	—	—	—	
1	1F	82	Phase N H.A	A	max.	3rd	①	1.67	A	—	—	—	—	
1	21	82	Phase N H.A	A	max.	5th	①	1.58	A	—	—	—	—	
1	23	82	Phase N H.A	A	max.	7th	①	1.47	A	—	—	—	—	
1	25	82	Phase N H.A	A	max.	9th	①	1.37	A	—	—	—	—	
1	27	82	Phase N H.A	A	max.	11th	①	1.28	A	—	—	—	—	
1	29	82	Phase N H.A	A	max.	13th	①	1.17	A	—	—	—	—	
0	80	1	active energy import	kWh	count		②	6666.66	kWh	6666.66	kWh	6666.66	kWh	Note1
0	80	63	active energy export	kWh	count		②	5555.55	kWh	5555.55	kWh	5555.55	kWh	Note1
0	80	64	active energy import	kWh	count	expand	②	6.66666	kWh	6.66666	kWh	6.66666	kWh	Note1
0	80	65	active energy export	kWh	count	expand	②	5.55555	kWh	5.55555	kWh	5.55555	kWh	Note1
0	81	1	reactive energy import lag	kvar	count		②	4444.44	kvar	4444.44	kvar	4444.44	kvar	Note1
0	81	63	reactive energy export lag	kvar	count		②	3333.33	kvar	3333.33	kvar	3333.33	kvar	Note1
0	81	64	reactive energy import lead	kvar	count		②	2222.22	kvar	2222.22	kvar	2222.22	kvar	Note1
0	81	65	reactive energy export lead	kvar	count		②	1111.11	kvar	1111.11	kvar	1111.11	kvar	Note1
0	81	66	reactive energy import lag	kvar	count	expand	②	4.44444	kvar	4.44444	kvar	4.44444	kvar	Note1
0	81	67	reactive energy export lag	kvar	count	expand	②	3.33333	kvar	3.33333	kvar	3.33333	kvar	Note1
0	81	68	reactive energy import lead	kvar	count	expand	②	2.22222	kvar	2.22222	kvar	2.22222	kvar	Note1
0	81	69	reactive energy export lead	kvar	count	expand	②	1.11111	kvar	1.11111	kvar	1.11111	kvar	Note1
0	1	14	current upper limit	A	Alarm		①	—	—	—	—	—	—	
0	1	15	current lower limit	A	Alarm		①	—	—	—	—	—	—	
0	1	94	current upper limit	A	Alarm	PhaseN	①	—	—	—	—	—	—	
0	2	14	current demand upper limit	A	Alarm		①	—	—	—	—	—	—	
0	2	15	current demand lower limit	A	Alarm		①	—	—	—	—	—	—	
0	2	94	current demand upper limit	A	Alarm	PhaseN	①	—	—	—	—	—	—	
0	5	14	voltage upper limit (L-L)	V	Alarm		①	—	—	—	—	—	—	
0	5	15	voltage lower limit (L-L)	V	Alarm		①	—	—	—	—	—	—	
0	3	14	voltage upper limit (L-N)	V	Alarm		①	—	—	—	—	—	—	
0	3	15	voltage lower limit (L-N)	V	Alarm		①	—	—	—	—	—	—	
0	7	14	active power upper limit	kW	Alarm		①	—	—	—	—	—	—	
0	7	15	active power lower limit	kW	Alarm		①	—	—	—	—	—	—	
0	9	14	reactive power upper limit	kvar	Alarm		①	—	—	—	—	—	—	
0	9	15	reactive power lower limit	kvar	Alarm		①	—	—	—	—	—	—	
0	0D	14	power factor upper limit	%	Alarm		①	—	—	—	—	—	—	
0	0D	15	power factor lower limit	%	Alarm		①	—	—	—	—	—	—	
0	0F	14	Frequency upper limit	Hz	Alarm		①	—	—	—	—	—	—	
0	0F	15	Frequency lower limit	Hz	Alarm		①	—	—	—	—	—	—	
0	77	E1	H.V(L-N) upper limit	%	Alarm	Total	①	—	—	—	—	—	—	
0	76	E1	H.V(L-L) upper limit	%	Alarm	Total	①	—	—	—	—	—	—	
0	75	E1	H.A upper limit	A	Alarm	Total	①	—	—	—	—	—	—	
0	75	F1	H.A upper limit(Phase N)	A	Alarm	Total	①	—	—	—	—	—	—	
0	A0	31	Alarm state		Alarm		③	Note2	—	Note2	—	Note2	—	
0	A0	35	Alarm state2		Alarm		③	Note3	—	Note3	—	Note3	—	

Note1. Counting values are replied on the values of primary side.

Note2. b21 and b24 become ON(1). b16 to b19 of digital inputs are reflected at the present state.

Note3. b23, b28 to b31 become ON(1).