MITSUBISHI ELECTRIC

TECHNICAL BULLETIN

[Issue No.] GOT-A-0009-P

[Title] Precautions when Replacing GOT-A900 Series with GOT1000 Series

[Date of Issue] September 2005 (Ver. P: September 2026)

[Relevant Models] GOT-A900 Series

Thank you for your continued support of Mitsubishi Electric Graphic Operation Terminal (GOT).

We released GOT1000 series with high functions and performance as an alternative of GOT-A900 series in 2004. We highly recommend that you replace GOT-A900 series with GOT1000 series for using new sophisticated features.

Contents

1. Requests for customers 3
2. Selection of GOT 3
3. Monitor screen data 8
   3.1 Common functions of GOT-A900 series 9
      3.1.1 Functions that require new settings 9
      3.1.2 Printers 9
      3.1.3 RGB output display 10
   3.2 Precautions for replacing A951GOT (without -M3) with GOT1000 series 10
   3.3 Functions only related to A960GOT-EB□(-EU) 12
      3.3.1 Functions that require changes 12
   3.4 Change of the utility call key setting 14
4. Communication 15
   4.1 Replacing the GOT-A900 series (connected by the A bus connection) with the GOT1000 series 15
      4.1.1 Settings of the GOT and PLC 15
      4.1.2 Connection type 17
5. Communication units and options 26
   5.1 List of replacement models 26
   5.2 Units that require new setting method 28
   5.3 Communication units and options without replaceable models 29
   5.4 Replacing the GOT-A900 series connected to the MELSECNET(II) or MELSECNET/B network system with the GOT1000 series 30
      5.4.1 Replacing the network in the entire system with the MELSECNET/H network system 30
      5.4.2 Changing the connection type between the programmable controller and the GOT without change of the network in the entire system 30
   5.5 Replacing the GOT-A900 series connected to the MELSECNET/10 (programmable controller to programmable controller optical loop/coaxial bus) network system with the GOT1000 series . 32
   5.6 When using the RUN/OUTPUT terminal of the GOT-A900 series power supply 32
6. Cables 33
   6.1 Bus connection cables 33
      6.1.1 Replacing GOT when using multiple units of bus connection 37
   6.2 RS-232 cable 37
   6.3 RS-422 cable 38
   6.4 Network cable (MELSECNET/10, Ethernet, and CC-Link) 40
   6.5 Other cables 40

MITSUBISHI ELECTRIC CORPORATION

HEAD OFFICE: TOKYO BLDG., 2-7-3, MARUNOUCHI, CHIYODA-KU, TOKYO 100-8310, JAPAN
NAGOYA WORKS: 1-14, YADA-MINAMI 5-CHOME, HIGASHI-KU, NAGOYA 461-8670, JAPAN

7. Mounting intervals 41
7.1 Downward dimension (A dimension) 41
7.1.1 Bus connection 41
7.2 Depth dimension (F dimension) 44
7.2.1 Bus connection 44
7.2.2 Printer connection 46
8. PC (CF, SD) card insertion direction 49
REVISIONS 51

1. Requests for customers

We released GOT1000 series with high functions and performance as an alternative of GOT-A900 series in 2004. We highly recommend that you replace GOT-A900 series with GOT1000 series for using new sophisticated features.
For the replacement models, refer to "Table 2-1 Recommended replacement GOT models of the GOT1000 series" in Chapter 2 below.
In the table, some models are introduced as recommended models due to less restriction on their replacement with the GOT1000 series. There may be some other models that you can select depending on their system environment. Therefore, we recommend you to select appropriate models by carefully considering the range of performance in current systems.

2. Selection of GOT

Select a GOT model.
When you replace GOT-A900 series with GOT1000 series, some GOTs require the change of the panel cutting dimensions. If you have difficulty to change the panel cutting dimensions, use the attachment.
The following table shows the recommended replacement GOT models of the GOT1000 series.
For the precautions on replacement, refer to each chapter and section.
When you use GOT1000 series shown below, the required drawing software and the drawing software version differ according to the model and functions. Prepare a compatible version of the drawing software.

Table 2-1 Recommended replacement GOT models of the GOT1000 series

GOT-A900 series in use (*1)		Recommended GOT1000 series for replacement (*8*10*11*14)	Panel cut compatibility ○: Compatible △: Not compatible (Attachment model)	Compatible software	
				GT Works3 Version1	GT Designer2 Version2
A985GOT-V	A985GOT-TBA-V	GT1685M-STBA	○	Ver.1.01B or later	Ver.2.90U or later
		GT1585V-STBA (*16)	○		Ver.2.04E or later
	A985GOT-TBD-V	GT1685M-STBD	○		Ver.2.90U or later
		GT1585V-STBD (*16)	○		Ver.2.04E or later
A985GOT	A985GOT-TBA	GT1685M-STBA (*9)	○	Ver.1.01B or later	Ver.2.90U or later
		GT1585-STBA (*16)	○		Ver.2.04E or later
	A985GOT-TBD	GT1685M-STBD (*9)	○		Ver.2.90U or later
		GT1585-STBD (*16)	○		Ver.2.04E or later
	A985GOT-TBA-EU	GT1685M-STBA (*9)	○		Ver.2.90U or later
		GT1585-STBA (*16)	○		Ver.2.04E or later
A975GOT	A975GOT-TBA-B	GT1675M-VTBA	○	Ver.1.01B or later	Ver.2.96A or later
		GT1575-VTBA (*16)	○		Ver.2.04E or later
	A975GOT-TBD-B	GT1675M-VTBD	○		Ver.2.96A or later
		GT1575-VTBD (*16)	○		Ver.2.04E or later
	A975GOT-TBA-EU	GT1675M-VTBA	○		Ver.2.96A or later
		GT1575-VTBA (*16)	○		Ver.2.04E or later
	A975GOT-TBA	GT1675M-VTBA	○		Ver.2.96A or later
		GT1575-VTBA (*16)	○		Ver.2.04E or later
	A975GOT-TBD	GT1675M-VTBD	○		Ver.2.96A or later
		GT1575-VTBD (*16)	○		Ver.2.04E or later

GOT-A900 series in use (*1)		Recommended GOT1000 series for replacement (*8*10*11*14)	Panel cut compatibility ○: Compatible △: Not compatible (Attachment model)	Compatible software	
				GT Works3 Version1	GT Designer2 Version2
A970GOT	A970GOT-TBA-B	GT1675M-VTBA	○	Ver.1.01B or later	Ver.2.96A or later
		GT1575-VTBA (*16)	○		Ver.2.04E or later
	A970GOT-TBD-B	GT1675M-VTBD	○		Ver.2.96A or later
		GT1575-VTBD (*16)	○		Ver.2.04E or later
	A970GOT-TBA-EU	GT1675M-VTBA	○		Ver.2.96A or later
		GT1575-VTBA (*16)	○		Ver.2.04E or later
	A970GOT-TBA	GT1675M-VTBA	○		Ver.2.96A or later
		GT1575-VTBA (*16)	○		Ver.2.04E or later
	A970GOT-TBD	GT1675M-VTBD	○		Ver.2.96A or later
		GT1575-VTBD (*16)	○		Ver.2.04E or later
	A970GOT-SBA	GT1675-VNBA	○	Ver.1.17T or later	Not compatible
		GT1575-VNBA (*16)	○	Ver.1.01B or later	Ver.2.18U or later
	A970GOT-SBD	GT1675-VNBD	○	Ver.1.17T or later	Not compatible
		GT1575-VNBD (*16)	○	Ver.1.01B or later	Ver.2.18U or later
	A970GOT-SBA-EU	GT1675-VNBA	○	Ver.1.17T or later	Not compatible
		GT1575-VNBA (*16)	○	Ver.1.01B or later	Ver.2.18U or later
	A970GOT-LBA	GT1672-VNBA	○	Ver.1.17T or later	Not compatible
		GT1572-VNBA (*16)	○	Ver.1.01B or later	Ver.2.18U or later
		GT1662-VNBA	△(GT15-60ATT-97)	Ver.1.17T or later	Not compatible
		GT1562-VNBA (*16)	△(GT15-60ATT-97)	Ver.1.01B or later	Ver.2.18U or later
	A970GOT-LBD	GT1672-VNBD	○	Ver.1.17T or later	Not compatible
		GT1572-VNBD (*16)	○	Ver.1.01B or later	Ver.2.18U or later
		GT1662-VNBD	△(GT15-60ATT-97)	Ver.1.17T or later	Not compatible
		GT1562-VNBD (*16)	△(GT15-60ATT-97)	Ver.1.01B or later	Ver.2.18U or later
	A970GOT-LBA-EU	GT1672-VNBA	○	Ver.1.17T or later	Not compatible
		GT1572-VNBA (*16)	○	Ver.1.01B or later	Ver.2.18U or later
		GT1662-VNBA	△(GT15-60ATT-97)	Ver.1.17T or later	Not compatible
		GT1562-VNBA (*16)	△(GT15-60ATT-97)	Ver.1.01B or later	Ver.2.18U or later
A960GOT	A960GOT-EBA	GT1662-VNBA (*12)	△(GT15-60ATT-96)	Ver.1.17T or later	Not compatible
		GT1562-VNBA (*12, *16)	△(GT15-60ATT-96)	Ver.1.01B or later	Ver.2.18U or later
	A960GOT-EBD	GT1662-VNBD (*12)	△(GT15-60ATT-96)	Ver.1.17T or later	Not compatible
		GT1562-VNBD (*12, *16)	△(GT15-60ATT-96)	Ver.1.01B or later	Ver.2.18U or later
	A960GOT-EBA-EU	GT1662-VNBA (*12)	△(GT15-60ATT-96)	Ver.1.17T or later	Not compatible
		GT1562-VNBA (*12, *16)	△(GT15-60ATT-96)	Ver.1.01B or later	Ver.2.18U or later
A956WGOT	A956WGOT-TBD	GT1655-VTBD (*13)	△(GT15-50ATT-95W)	Ver.1.28E or later	Not compatible
		GT1555-VTBD (*13, *16)	△(GT15-50ATT-95W)	Ver.1.01B or later	Ver.2.58L or later
A956GOT	A956GOT-TBD-M3	GT1655-VTBD (*15)	○	Ver.1.28E or later	Not compatible
		GT1555-QTBD (*16)	○	Ver.1.01B or later	Ver.2.32J or later
	A956GOT-TBD	GT1655-VTBD (*15)	○	Ver.1.28E or later	Not compatible
		GT1555-QTBD (*16)	○	Ver.1.01B or later	Ver.2.32J or later
	A956GOT-SBD-M3-B	GT1655-VTBD (*15)	○	Ver.1.28E or later	Not compatible
		GT1555-QSBD (*16)	○	Ver.1.01B or later	Ver.2.32J or later
	A956GOT-SBD-B	GT1655-VTBD (*15)	○	Ver.1.28E or later	Not compatible
		GT1555-QSBD (*16)	○	Ver.1.01B or later	Ver.2.32J or later
	A956GOT-SBD-M3	GT1655-VTBD (*15)	○	Ver.1.28E or later	Not compatible
		GT1555-QSBD (*16)	○	Ver.1.01B or later	Ver.2.32J or later
	A956GOT-SBD	GT1655-VTBD (*15)	○	Ver.1.28E or later	Not compatible
		GT1555-QSBD (*16)	○	Ver.1.01B or later	Ver.2.32J or later

GOT-A900 series in use (*1)		Recommended GOT1000 series for replacement (*8*10*11*14)	Panel cut compatibility ○: Compatible △: Not compatible (Attachment model)	Compatible software	
				GT Works3 Version1	GT Designer2 Version2
A956GOT	A956GOT-LBD-M3	GT1655-VTBD (*15)	○	Ver.1.28E or later	Not compatible
		GT1550-QLBD (*16)	○	Ver.1.01B or later	Ver.2.32J or later
	A956GOT-LBD	GT1655-VTBD (*15)	○	Ver.1.28E or later	Not compatible
		GT1550-QLBD (*16)	○	Ver.1.01B or later	Ver.2.32J or later
A953GOT	A953GOT-TBD-M3	GT1655-VTBD (*3, *15)	○	Ver.1.28E or later	Not compatible
		GT1555-QTBD (*3, *16)	○	Ver.1.01B or later	Ver.2.32J or later
		GT1455-QTBD	○	Ver.1.37P or later	Not compatible
		GT1455-QTBDE (*7)	○		
	A953GOT-TBD	GT1655-VTBD (*3, *15)	○	Ver.1.28E or later	Not compatible
		GT1555-QTBD (*3, *16)	○	Ver.1.01B or later	Ver.2.32J or later
		GT1455-QTBD	○	Ver.1.37P or later	Not compatible
		GT1455-QTBDE (*7)	○		
	A953GOT-SBD-M3-B	GT1655-VTBD (*3, *15)	○	Ver.1.28E or later	Not compatible
		GT1555-QSBD (*3, *16)	○	Ver.1.01B or later	Ver.2.32J or later
		GT1455-QTBD	○	Ver.1.37P or later	Not compatible
		GT1455-QTBDE (*7)	○		
	A953GOT-SBD-B	GT1655-VTBD (*3, *15)	○	Ver.1.28E or later	Not compatible
		GT1555-QSBD (*3, *16)	○	Ver.1.01B or later	Ver.2.32J or later
		GT1455-QTBD	○	Ver.1.37P or later	Not compatible
		GT1455-QTBDE (*7)	○		
	A953GOT-SBD-M3	GT1655-VTBD (*3, *15)	○	Ver.1.28E or later	Not compatible
		GT1555-QSBD (*3, *16)	○	Ver.1.01B or later	Ver.2.32J or later
		GT1455-QTBD	○	Ver.1.37P or later	Not compatible
		GT1455-QTBDE (*7)	○		
	A953GOT-SBD	GT1655-VTBD (*3, *15)	○	Ver.1.28E or later	Not compatible
		GT1555-QSBD (*3, *16)	○	Ver.1.01B or later	Ver.2.32J or later
		GT1455-QTBD	○	Ver.1.37P or later	Not compatible
		GT1455-QTBDE (*7)	○		
	A953GOT-LBD-M3	GT1655-VTBD (*3, *15)	○	Ver.1.28E or later	Not compatible
		GT1550-QLBD (*3, *16)	○	Ver.1.01B or later	Ver.2.32J or later
		GT1450-QMBD	○	Ver.1.118Y or later	Not compatible
		GT1450-QMBDE (*7)	○	Ver.1.118Y or later	Not compatible
	A953GOT-LBD	GT1655-VTBD (*3, *15)	○	Ver.1.28E or later	Not compatible
		GT1550-QLBD (*3, *16)	○	Ver.1.01B or later	Ver.2.32J or later
		GT1450-QMBD	○	Ver.1.118Y or later	Not compatible
		GT1450-QMBDE (*7)	○	Ver.1.118Y or later	Not compatible
A951GOT	A951GOT-QTBD-M3	GT1655-VTBD (*4, *15)	○	Ver.1.28E or later	Not compatible
		GT1555-QTBD (*4, *16)	○	Ver.1.01B or later	Ver.2.32J or later
	A951GOT-QTBD *2	GT1655-VTBD (*4, *15)	○	Ver.1.28E or later	Not compatible
		GT1555-QTBD (*4, *16)	○	Ver.1.01B or later	Ver.2.32J or later
	A951GOT-QSBD-M3-B	GT1655-VTBD (*4, *15)	○	Ver.1.28E or later	Not compatible
		GT1555-QSBD (*4, *16)	○	Ver.1.01B or later	Ver.2.32J or later
	A951GOT-QSBD-B *2	GT1655-VTBD (*4, *15)	○	Ver.1.28E or later	Not compatible
		GT1555-QSBD (*4, *16)	○	Ver.1.01B or later	Ver.2.32J or later
	A951GOT-QSBD-M3	GT1655-VTBD (*4, *15)	○	Ver.1.28E or later	Not compatible
		GT1555-QSBD (*4, *16)	○	Ver.1.01B or later	Ver.2.32J or later
	A951GOT-QSBD *2	GT1655-VTBD (*4, *15)	○	Ver.1.28E or later	Not compatible
		GT1555-QSBD (*4, *16)	○	Ver.1.01B or later	Ver.2.32J or later

GOT-A900 series in use (*1)		Recommended GOT1000 series for replacement (*8*10*11*14)	Panel cut compatibility ○: Compatible △: Not compatible (Attachment model)	Compatible software	
				GT Works3 Version1	GT Designer2 Version2
A951GOT	A951GOT-QLBD-M3	GT1655-VTBD (*4, *15)	○	Ver.1.28E or later	Not compatible
		GT1550-QLBD (*4, *16)	○	Ver.1.01B or later	Ver.2.32J or later
	A951GOT-QLBD *2	GT1655-VTBD (*4, *15)	○	Ver.1.28E or later	Not compatible
		GT1550-QLBD (*4, *16)	○	Ver.1.01B or later	Ver.2.32J or later
	A951GOT-TBD-M3	GT1655-VTBD (*5, *15)	○	Ver.1.28E or later	Not compatible
		GT1555-QTBD (*5, *16)	○	Ver.1.01B or later	Ver.2.32J or later
	A951GOT-TBD *2	GT1655-VTBD (*5, *15)	○	Ver.1.28E or later	Not compatible
		GT1555-QTBD (*5, *16)	○	Ver.1.01B or later	Ver.2.32J or later
	A951GOT-SBD-M3-B	GT1655-VTBD (*5, *15)	○	Ver.1.28E or later	Not compatible
		GT1555-QSBD (*5, *16)	○	Ver.1.01B or later	Ver.2.32J or later
	A951GOT-SBD-B *2	GT1655-VTBD (*5, *15)	○	Ver.1.28E or later	Not compatible
		GT1555-QSBD (*5, *16)	○	Ver.1.01B or later	Ver.2.32J or later
	A951GOT-SBD-M3	GT1655-VTBD (*5, *15)	○	Ver.1.28E or later	Not compatible
		GT1555-QSBD (*5, *16)	○	Ver.1.01B or later	Ver.2.32J or later
	A951GOT-SBD *2	GT1655-VTBD (*5, *15)	○	Ver.1.28E or later	Not compatible
		GT1555-QSBD (*5, *16)	○	Ver.1.01B or later	Ver.2.32J or later
	A951GOT-LBD-M3	GT1655-VTBD (*5, *15)	○	Ver.1.28E or later	Not compatible
		GT1550-QLBD (*5, *16)	○	Ver.1.01B or later	Ver.2.32J or later
	A951GOT-LBD *2	GT1655-VTBD (*5, *15)	○	Ver.1.28E or later	Not compatible
		GT1550-QLBD (*5, *16)	○	Ver.1.01B or later	Ver.2.32J or later
A950GOT	A950GOT-TBD-M3	GT1655-VTBD (*6, *15)	○	Ver.1.28E or later	Not compatible
		GT1555-QTBD (*6, *16)	○	Ver.1.01B or later	Ver.2.32J or later
		GT1455-QTBD	○	Ver.1.37P or later	Not compatible
		GT1455-QTBDE (*7)	○		
	A950GOT-TBD	GT1655-VTBD (*6, *15)	○	Ver.1.28E or later	Not compatible
		GT1555-QTBD (*6, *16)	○	Ver.1.01B or later	Ver.2.32J or later
		GT1455-QTBD	○	Ver.1.37P or later	Not compatible
		GT1455-QTBDE (*7)	○		
	A950GOT-SBD-M3-B	GT1655-VTBD (*6, *15)	○	Ver.1.28E or later	Not compatible
		GT1555-QSBD (*6, *16)	○	Ver.1.01B or later	Ver.2.32J or later
		GT1455-QTBD	○	Ver.1.37P or later	Not compatible
		GT1455-QTBDE (*7)	○		
	A950GOT-SBD-B	GT1655-VTBD (*6, *15)	○	Ver.1.28E or later	Not compatible
		GT1555-QSBD (*6, *16)	○	Ver.1.01B or later	Ver.2.32J or later
		GT1455-QTBD	○	Ver.1.37P or later	Not compatible
		GT1455-QTBDE (*7)	○		
	A950GOT-SBD-M3	GT1655-VTBD (*6, *15)	○	Ver.1.28E or later	Not compatible
		GT1555-QSBD (*6, *16)	○	Ver.1.01B or later	Ver.2.32J or later
		GT1455-QTBD	○	Ver.1.37P or later	Not compatible
		GT1455-QTBDE (*7)	○		
	A950GOT-SBD	GT1655-VTBD (*6, *15)	○	Ver.1.28E or later	Not compatible
		GT1555-QSBD (*6, *16)	○	Ver.1.01B or later	Ver.2.32J or later
		GT1455-QTBD	○	Ver.1.37P or later	Not compatible
		GT1455-QTBDE (*7)	○		
	A950GOT-LBD-M3	GT1655-VTBD (*6, *15)	○	Ver.1.28E or later	Not compatible
		GT1550-QLBD (*6, *16)	○	Ver.1.01B or later	Ver.2.32J or later
		GT1450-QMBD	○	Ver.1.118Y or later	Not compatible
		GT1450-QMBDE (*7)	○		

GOT-A900 series in use (*1)		Recommended GOT1000 series for replacement (*8*10*11*14)	Panel cut compatibility ○: Compatible △: Not compatible (Attachment model)	Compatible software	
				GT Works3 Version1	GT Designer2 Version2
A950GOT	A950GOT-LBD	GT1655-VTBD (*6, *15)	○	Ver.1.28E or later	Not compatible
		GT1550-QLBD (*6, *16)	○	Ver.1.01B or later	Ver.2.32J or later
		GT1450-QMBD	○	Ver.1.118Y or later	Not compatible
		GT1450-QMBDE (*7)	○		

*1 Production of all the GOT-A900 series models was discontinued.
*2 For replacement model, GT11 dedicated to bus connection is also available. For details, refer to Section 3.2.
*3 When replacing, communicate with RS-232 interface of GOT or use RS-232 serial communication unit (GT15-RS2-9P).
*4 When replacing, use a Q bus connection unit (GT15-QBUS (2) or GT15-75QBUS (2)L).
*5 Change the connection method because the replacement model for the A bus connection is not provided. Select the model according to the connection method that is available for replacement.
*6 When replacing, use an RS-422 serial communication unit (GT15-RS4-9S).Since the RS-422 serial communication unit (GT15-RS4-9S) has a 9-pin connector, replace the cables in present use (AC□R4-25P and others) with the GOT1000 series cables.
*7 On the GT1455-QTBDE and the GT1450-QLBDE, Ethernet connection can also be used with the Ethernet interface.
*8 The Sound output function is an option for the GOT1000 series. When using the sound output function of the GOT-A900 series, use the sound output unit (GT15-SOUT) of the GOT1000 series separately.
*9 The RGB output function is an option for the GOT1000 series. When using the RGB output function of the GOT-A900 series, use the RGB output unit (GT16-ROUT) of the GOT1000 series separately.
*10 The GOT1000 series has no RUN/OUTPUT terminal in the power supply section.
When using the RUN/OUTPUT terminal in the power supply section of the GOT-A900 series, consider using the RUN output of the external I/O unit (GT15-DIO or GT15-DIOR). For the details of the external I/O unit, refer to the following.
• GT15 External I/O Unit (Positive Common Input/Sink Type Output) User's Manual (IB-0800382) (GT15-DIO)
• GT15 External I/O Unit (Negative Common Input/Source Type Output) User's Manual (IB-0800425) (GT15-DIOR)
*11 The display section of the GT16 and the GT14 is an analog-resistive type touch panel. When you touch two points or more simultaneously on the display section, any touch switch located around the center of the touched points may operate. Do not touch two or more points on the display section simultaneously.
*12 The resolution after replacement is changed (from 640 × 400 dots to 640 × 480 dots).
*13 The resolution after replacement is changed (from 480 × 234 dots to 640 × 480 dots).
*14 For the production status, contact your local sales office for the relevant technical bulletin.
For Technical News, go to the MITSUBISHI ELECTRIC FA Global Website.
➡https://us.mitsubishielectric.com/fa/en/
*15 The resolution after replacement is changed (from 320 × 240 dots to 640 × 480 dots).
*16 Production of all the GT15 models was discontinued.

【Other】
For replacing the GOT-A950 Handy series, refer to the following.
• Project Data Conversion Summary(For GOT1000 Series) GOT-F900 > GOT1000 (JY997D17601)

3. Monitor screen data

The monitor screen data used for GOT-A900 series are applicable to GOT1000 series by only changing the GOT type as indicated below.

(1) With GT Designer2 Version2

<Procedure>

1) When the data exists on the personal computer, check the storage location for the GOT-A900 series project data.
   When no data exists on the personal computer, connect to GOT-A900 and upload the project data by using GT Designer2 Version2.
2) Open the project data of (1) in GT Designer2 Version2, change the GOT type to the GOT1000 series.
3) Use GT Designer2 Version2 to check the communication settings, and download the project data and communication driver to the GOT1000 series.

(2) With GT Works3 Version1

<Procedure>

1) When the data exists on the personal computer, check the storage location for the GOT-A900 series project data.
   When no data exists on the personal computer, connect to GOT-A900 and upload the project data by using GT Designer2 Classic or Data Transfer Tool included in GT Works3 Version1.
2) Open the project data of 1) in GT Designer3 (GOT1000) of GT Works3 Version1, and change the GOT type to the GOT1000 series.
3) Use GT Designer3 (GOT1000) to check the communication settings, and download the project data and communication driver to the GOT1000 series.

<Precautions>

1) When some functions require new settings and any changes or some functions are unavailable with GOT1000 series, refer to Chapter 3 and consider replacement methods.
2) For the functions unsupported by GOT1000 series, data set for GOT-A900 series is deleted when replacing with GOT1000 series.
3) For using existing data with GOT1000 series, refer to “App3. Utilizing the Existing Data” in the GT Designer2 Version2 Basic Operation/Data Transfer Manual (SH080529ENG).
4) The GT1662-VNBA and the GT1662-VNBD do not support the drawing software GT Designer2 Version□. Open the GOT-A900 series project data with GT Works3 Version1 (Ver1.15R or later), and change the GOT type to GT16**-V(640x480).
5) The GT1655-VTBD do not support the drawing software GT Designer2 Version□. Open the GOT-A900 series project data with GT Works3 Version1 (Ver1.26C or later), and change the GOT type to GT165*-V(640x480).
6) The GT1455-QTBD and GT1455-QTBDE do not support the drawing software GT Designer2 Version□. Open the GOT-A900 series project data with GT Works3 Version1 (Ver1.34L or later), and change the GOT type to GT14**-Q (320×240).
7) The GT1450-QMBD and GT1450-QMBDE do not support the drawing software, GT Designer2 Version□. Open the GOT-A900 series project data with GT Works3 Version1 (Ver1.118Y or later), and change the GOT type to GT14**-Q (320x240).
8) When you replace the A95□GOT-□LBD(-M3) with the GOT1000 series, black and white pixels are inverted on GT Designer3. By setting [GOT Setup] in the utility, the GOT1000 series can display the same image as the one that is created with GT Designer2.

3.1 Common functions of GOT-A900 series

3.1.1 Functions that require new settings

Table 3-1 Functions that require new settings

Item	Function	User settings	
Common settings	Communication settings	To communicate with FA equipment, new settings for interface channel No., driver, communication baud rate are required. For details of how to make the settings, refer to the following manuals. • "3.7 Communication Interface Setting (Communication Settings)" in the GT Designer2 Version2 Screen Design Manual (SH-080530ENG) • GOT1000 Series Connection Manual for GT Works3 (SH-080868ENG to SH-080871ENG)	
Printer	Printer function	PictBridge compatible printer	The printer unit (GT15-PRN) is required separately. The extended function OS [Printer] or [Printer(PictBridge)] must be installed on the GOT.
		Serial printer	The drawing software GT Works3 Version1 (Ver1.17T or later) is required. The extended function OS [Printer(Serial)] must be installed on the GOT.
Object	Report function	To use the report function, the user settings for the printer described above is required, and the extended function OS [Report] must be installed on the GOT.	
Sound	Sound output function	To use the sound output function, the sound output unit (GT15-SOUT) is required separately. The extended function OS [Sound Output] must be installed on the GOT.	

3.1.2 Printers

When using printers with the GOT-A900 series, the following are required.

(1) Type of printer

The GOT-A900 series supports parallel printers only. The GOT1000 series supports PictBridge compatible printers and serial printers. Therefore, when you replace GOT-A900 series with GOT1000 series, the printer must be replaced. For the validated printer models applicable to the GOT1000 series, refer to TECHNICAL BULLETIN GOT-A-0010 "List of Valid Devices Applicable for GOT1000 Series" on the Mitsubishi Electric Factory Automation Global Website.

(2) Required units

(a) For PictBridge compatible printers

The printer unit GT15-PRN is required separately.

(b) For serial printers

No option unit is required. A serial printer is connected to the RS-232 interface of the GOT.

(3) Specific print method with alarm history display function

GOT1000 series does not support the function to print the alarm history of the alarm history display function for GOT-A900 series. Save an alarm history file to a CF card in CSV format, and use Microsoft® Excel® and others with a personal computer to print the history.

(4) Report function

With a PictBridge compatible printer, the GOT1000 series supports the GOT-A900 series project data with the report style setting [Log/Page] only. Set the report style to [Log/Page] on the drawing software.
With a serial printer, the GOT1000 series supports the GOT-A900 series project data with the report style setting [Real/Cont] or [Log/Page].

3.1.3 RGB output display

The A985GOT-TBA and the A985GOT-TBD, which are GOT-A900 series, support the RGB output display function. For replacing those models with GOT1000 series, the function is supported by mounting the applicable option unit on the GOT1000 series as shown below.

GOT supporting RGB display	Applicable option unit
GT1695M-XTB□ GT1685M-STB□ GT1675M-□TB□ GT1665M-□TB□	GT16M-ROUT
GT1585V-STB□ GT1575V-STB□	GT15V-75ROUT

3.2 Precautions for replacing A951GOT (without -M3) with GOT1000 series

To replace the GOT-A900 series dedicated to the bus connection (A951GOT (without -M3)) with the GOT1000 series, refer to the following table.

Table 3-2 List of replacement models

GOT-A900 series in use	Replacement models	Remarks
A951GOT-QTBD	GT1155-QTBDQ	5.7" TFT Q bus connection
	GT1555-QTBD + Q bus connection module	
A951GOT-QSBD-B	GT1155-QSBDQ	5.7" STN color Q bus connection
	GT1555-QSBD + Q bus connection module	
A951GOT-QSBD	GT1155-QSBDQ	5.7" STN color Q bus connection
	GT1555-QSBD + Q bus connection module	
A951GOT-QLBD	GT1150-QLBDQ	5.7" STN monochrome Q bus connection
	GT1550-QLBD + Q bus connection module	
A951GOT-TBD	GT1155-QTBDA	5.7" TFT A bus connection
	GT1555-QTBD + A bus connection module	
A951GOT-SBD-B	GT1155-QSBDA	5.7" STN color A bus connection
	GT1555-QSBD + A bus connection module	
A951GOT-SBD	GT1155-QSBDA	5.7" STN color A bus connection
	GT1555-QSBD + A bus connection module	
A951GOT-LBD	GT1150-QLBDA	5.7" STN monochrome A bus connection
	GT1550-QLBD + A bus connection module	

GT11 dedicated to the bus connection does not support the following functions.

Table 3-3 Limited functions by GT11 dedicated to bus connection

Function	Description	GT11 dedicated to bus connection
Station number switching	The function to switch a network module station number of monitor target of the object	Not applicable
Access range for monitoring	The access range that the GOT can monitor	Only the host station (0-FF) can be monitored.
Print related functions	The functions related to report function, comment print, hard copy print and others	Not applicable (A printer cannot be connected.)
External I/O function (Operation panel)	The function to connect external I/O equipment such as operation panel, numeric keypad panel, and push button switch	Not applicable
Kana-kanji conversion function	The function to convert from hiragana to kanji when inputting ASCII characters	Not applicable
Scrolling alarm display	The function to scroll user-created comments across the base screen from right to left when an alarm occurs	Applicable with GT Designer2 Version2 (Ver2.72A or later) or GT Works3 Version1
Multiple connection	When connecting multiple GOTs	Not applicable

3.3 Functions only related to A960GOT-EB□(-EU)

3.3.1 Functions that require changes

Use GT Designer2 Version2 to change the setting as follows.
<Precautions>
This section explains the settings by using GT Designer2 Version2 as an example. When replacing the GOT with the GT1662-VNBA or the GT1662-VNBD, open a project data with GT Works3 Version1 (Ver1.15R or later), and change the GOT type to GT16**-V(640x480).

Table 3-4 Functions that require changes

Item	Function	User settings
Common settings	Resolution	Change resolution from 640x400 to 640×480. When changing the resolution, positions to place figures and objects can be selected. The procedure is described below (including the operating procedure to specify the positions). 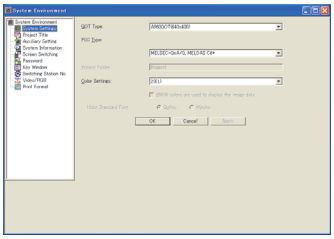 ↓ 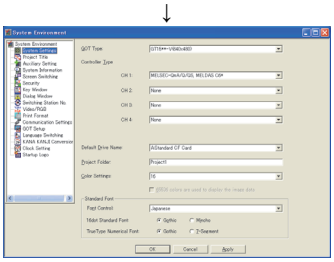 ↓ 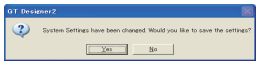 ↓ Ver2.92W or earlier Ver2.93X or later ↓ 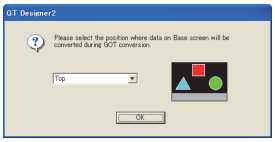 • Change [GOT Type] and [Color Settings] in the [System Environment] dialog box. • [GOT Type] A960GOT (640×400) ↓ GT15**-V (640×480) • [Color Settings] Select [16]. • Check that [GOT Type] is set to [GT15**-V(640 x 480)] and [Color Settings] is set to [16]. Then click the [OK] button or the [Apply] button. • The conversion confirmation dialog box appears. With Ver2.92W or earlier, click the [Yes] button to automatically enlarge or reduce figures and objects. Click the [No] button to display the following dialog box for specifying the positions of the figures and the objects. With Ver2.93X or later, select [Perform Automatic Scaling on the positions/sizes of figures and objects] and click the [OK] button to automatically enlarge or reduce the figures and the objects. Select [Resize the screen only] and click the [OK] button to display the following dialog box for specifying the positions. • After the dialog box to specify the positions of the figures and the objects appears, select a position from top, center, or bottom. [Patterns to place figures and objects] 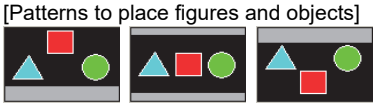 Top Center Bottom • After selecting the position, click the [OK] button to convert data, and then the communication settings are required. After the conversion explained above, 640x80 MB of free space is obtained and enables new setting of objects. However, it is not possible to automatically move the position of each object along with the resolution change.

Item	Function	User settings
Common settings	Color settings	When changing the GOT type from “A960GOT (640x400): EL color” to “GT15**-V (640x480): 16 color,” the colors of objects on the GT Designer2 Version2 remain yellowish orange (EL color). In addition, when downloading the monitor screen data to the GOT1000 which supports 16 color display, objects are displayed in yellow on the GOT1000 since yellowish orange is not included in the 16 colors. To change the color to other than yellow, change the object color by using batch edit or by replacing colors of objects individually. The following shows the procedures for the color batch edit. 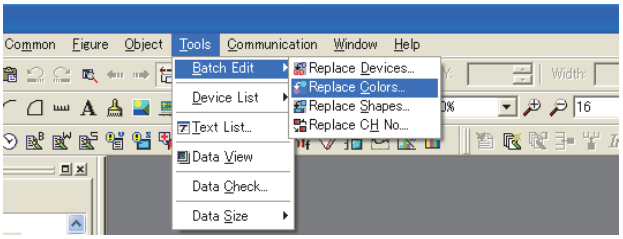 • Select [Tool]-[Batch Edit]- [Replace Colors] from the menu. ↓ 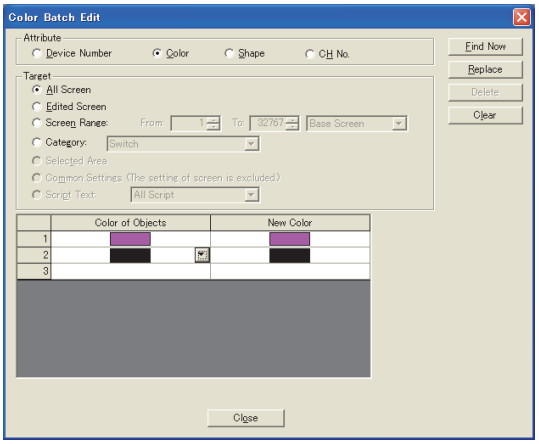 • Select a target screen and click the [Find Now] button. ([All Screen] is selected as a target in this example.) • All colors in present use are displayed in cells. Click on cells in [New Color] and select colors from the color pallet. • Click the [Replace] button to change colors. ↓ 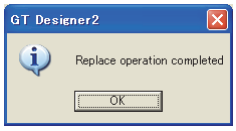 • When batch conversion of colors is completed, a dialog appears with completion message. When using batch conversion of colors, the colors of all bit map images are changed to white. Bit map images are in yellowish orange right after the conversion. The bit map images are changed to white when closing screens and then open the screen data again. To change the colors of bit map images, edit images by using commercially available paint software and others, and then read the images into GT Designer2 Version2.

3.4 Change of the utility call key setting

While the user-created screen is displayed, touching the utility call key displays the main menu.
For the GT15 models, the utility call key is set in the position of simultaneous 2-point press on the GOT screen upper-left and upper-right corners. For the GT16 and the GT14 models, note that the utility call key is set in the position of 1-point press on the GOT screen upper-left corner.
The position of the utility call key can be changed using the GOT utility, GT Designer3, or GT Designer2.
The following shows the position of the utility call key for the GT15 models set at factory default.

Model	Utility call key (factory default)
GT1585 GT157□ GT156□ GT155□	Simultaneous 2-point press on the GOT screen upper-left and upper-right corners 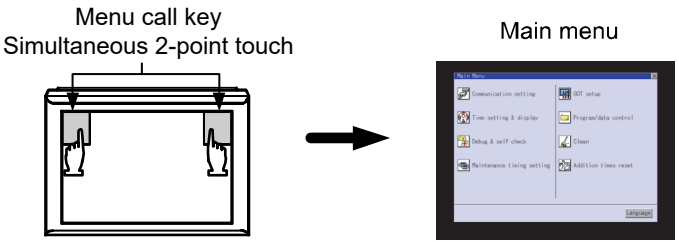

The following shows the position of the utility call key for the GT16 and the GT14 models set at factory default.

Model	Utility call key
GT16 GT14	1-point press on the GOT screen upper-left corner 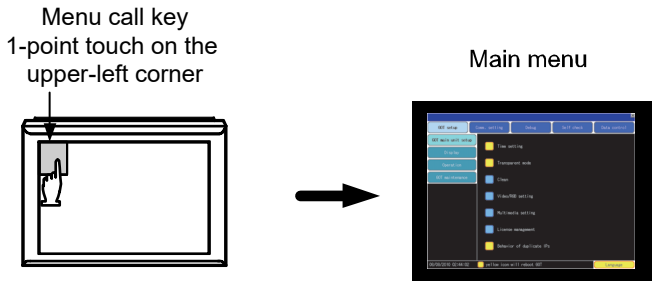

4. Communication

4.1 Replacing the GOT-A900 series (connected by the A bus connection) with the GOT1000 series

No order for all the models of the A bus connection unit for the GOT1000 series was accepted in and after December 31, 2014, and the production was discontinued in January 31, 2015. When the GOT-A900 series is connected by the A bus connection, the connection type must be changed or the PLC must be replaced. To replace the PLC, refer to the following Technical Bulletin.

➟ Production discontinuation of MELSEC-AnS/QnAS (small type) series and MELSEC-I/OLINK (FA-A-0142)
Production discontinuation of MELSEC-A/QnA (large type) series (T99-0050)

To change the A bus connection to another connection type, refer to the following.

➟ 4.1.1 Settings of the GOT and PLC
4.1.2 Connection type

4.1.1 Settings of the GOT and PLC

When changing the connection type, check the settings of the PLC and GOT.

(1) PLC

When the GOT connected by the bus connection is removed or a communication unit is added to the PLC, the PLC may require new settings. According to the PLC configuration, check the parameter setting (including I/O assignment) and I/O numbers in the sequence program.

(2) GOT

Change the controller setting. *1
When changing the connection type to the network connection (excluding the Ethernet connection), set the network number and station number in the device number of each object. *2

*1 Example of the controller setting
For the direct CPU connection (RS-422 connection) to the MELSEC-A series

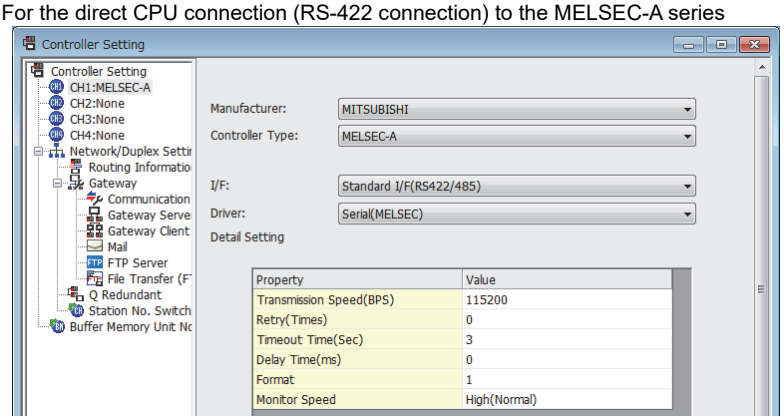

*2 Setting of the network number and station number

To monitor D0 of the CPU in the network number 1 and station number 2

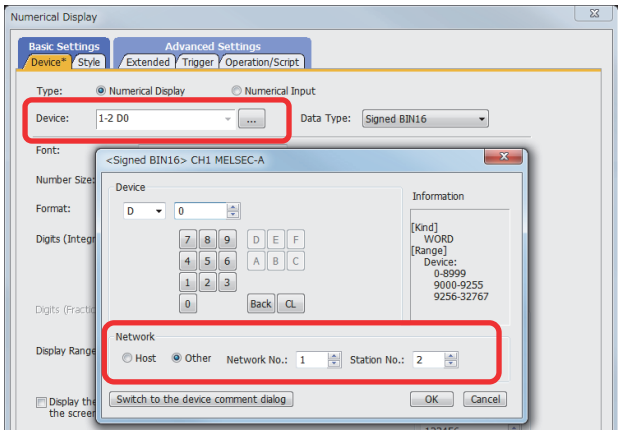

4.1.2 Connection type

(1) Changing the connection type to the serial connection

(a) Direct Connection to CPU

Connect the GOT in the following configuration.

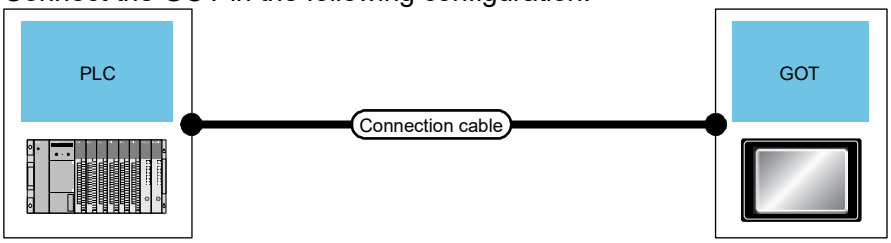

1) When connecting the GOT with MELSEC-A (ACPU, AnCPU, AnSCPU) or MELSEC-QnA (QnACPU, QnASCPU)

PLC		Cable model *1	GOT	
Model name	Communication type		Option device	Model
MELSEC-A(ACPU) *2 MELSEC-A(AnCPU) *2 MELSEC-A(AnSCPU) *2 MELSEC-Q(QnACPU) MELSEC-Q(QnASCPU)	RS-422	GT01-C30R4-25P(3m) GT01-C100R4-25P(10m) GT01-C200R4-25P(20m) GT01-C300R4-25P(30m)	GT16-C02R4-9S	GT16
			GT15-RS2T4-9P *3	GT16, GT15
			GT15-RS4-9S	
			(Built into GOT)	GT14

*1 If the connection distance exceeds 30m, consider changing the connection type to the network connection.

*2 When monitoring AnNCPU, A0J2HCPU, A2CCPU or A2SCPU, only the following or later software version is used to write to the CPU.
- AnNCPU(S1) with link: Version L or later, AnNCPU(S1) without link: Version H or later
- A0J2HCPU (with/without link): Version E or later
- A0J2HCPU-DC24: Version B or later
- A2CCPU, A2SCPU: Version H or later

*3 Connect it to the RS-232 interface (built into GOT). It cannot be mounted on GT1655 and GT155□.

(b) Computer Link Connection

Connect the GOT in the following configuration.
Changing the connection type to the computer link connection requires a computer link module on the PLC side.

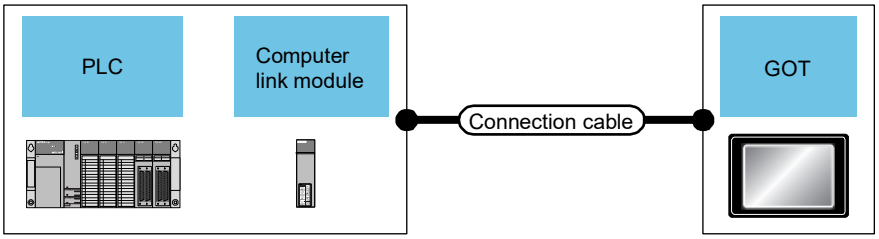

1) When connecting the GOT with MELSEC-A (ACPU, AnCPU) *1

PLC		Cable model *2*3	GOT	
Computer link module	Communication type		Option device	Model
AJ71UC24 *5	RS-232	GT09-C30R2-25P(3m) Cables prepared by the user (max.: 15m)	(Built into GOT)	GT16, GT15, GT14
			GT15-RS2-9P	GT16, GT15
	RS-422	Cables prepared by the user (max.: 500m)	(Built into GOT)	GT16
		GT09-C30R4-6C(3m) GT09-C100R4-6C(10m) GT09-C200R4-6C(20m) GT09-C300R4-6C(30m) Cables prepared by the user (max.: 500m)	GT16-C02R4-9S	GT16
			GT15-RS2T4-9P *4	GT16, GT15
			GT15-RS4-9S	
			(Built into GOT)	GT14

*1 The computer link module version U or later supports the A2SCPU(S1), A2SHCPU(S1), A1SHCPU, A1SJHCPU and A0J2HCPU.
In addition, A0J2-C214-S1 (A0J2HCPU-dedicated computer link module) cannot be used.
*2 For cables prepared by the user, refer to the following.
➞ GOT1000 Series Connection Manual (Mitsubishi Electric Products) for GT Works3
*3 If the connection distance exceeds 30m, consider changing the connection type to the connection using a cable prepared by the user or the network connection.
*4 Connect it to the RS-232 interface (built into GOT). It cannot be mounted on GT1655 and GT155□.
*5 Production of this module has been discontinued.

2) When connecting the GOT with MELSEC-A (AnSCPU *1, A0J2HCPU *1, A2CCPU)

PLC		Cable model *2*3	GOT	
Computer link module	Communication type		Option device	Model
A1SJ71UC24-R2 *5 A1SJ71C24-R2 *5 A1SJ71UC24-PRF *5 A1SJ71C24-PRF *5	RS-232	GT09-C30R2-9P(3m) Cables prepared by the user (max.: 15m)	(Built into GOT)	GT16, GT15, GT14
			GT15-RS2-9P	GT16, GT15
A1SJ71UC24-R4 *5 A1SJ71C24-R4 *5	RS-422	Cables prepared by the user (max.: 500m)	(Built into GOT)	GT16
		GT09-C30R4-6C(3m) GT09-C100R4-6C(10m) GT09-C200R4-6C(20m) GT09-C300R4-6C(30m) Cables prepared by the user (max.: 500m)	GT16-C02R4-9S	GT16
			GT15-RS2T4-9P *4	GT16, GT15
			GT15-RS4-9S	
			(Built into GOT)	GT14

*1 The computer link module version U or later supports the A2SCPU(S1), A2SHCPU(S1), A1SHCPU, A1SJHCPU and A0J2HCPU.

In addition, A0J2-C214-S1 (A0J2HCPU-dedicated computer link module) cannot be used.

*2 For cables prepared by the user, refer to the following.
➡ GOT1000 Series Connection Manual (Mitsubishi Electric Products) for GT Works3

*3 If the connection distance exceeds 30m, consider changing the connection type to the connection using a cable prepared by the user or the network connection.

*4 Connect it to the RS-232 interface (built into GOT). It cannot be mounted on GT1655 and GT155□.

*5 Production of this module has been discontinued.

3) When connecting the GOT with MELSEC-QnA (QnACPU)

PLC		Cable model *1*2	GOT	
Serial communication/ Computer link module	Communication type		Option device	Model
AJ71QC24 *5 AJ71QC24N *5 AJ71QC24-R2 *5 AJ71QC24N-R2 *5	RS-232	GT09-C30R2-25P(3m) Cables prepared by the user (max.: 15m)	(Built into GOT)	GT16, GT15, GT14
			GT15-RS2-9P	GT16, GT15
AJ71QC24-R4 *5 AJ71QC24N-R4 *5	RS-422	GT01-C30R4-25P(3m) GT01-C100R4-25P(1m) GT01-C200R4-25P(20m) GT01-C300R4-25P(30m)	GT16-C02R4-9S	GT16
			GT15-RS2T4-9P *3	GT16, GT15
			GT15-RS4-9S	
			(Built into GOT)	GT14
AJ71QC24 *5 AJ71QC24N *5 AJ71QC24-R4 *5 AJ71QC24N-R4 *5	RS-422	Cables prepared by the user (max.: 1200m)	(Built into GOT)	GT16
		GT09-C30R4-6C(3m) GT09-C100R4-6C(10m) GT09-C200R4-6C(20m) GT09-C300R4-6C(30m) Cables prepared by the user (max.: 1200m)	GT16-C02R4-9S	GT16
			GT15-RS2T4-9P *3	GT16, GT15
			GT15-RS4-9S	
			(Built into GOT)	GT14
AJ71UC24 *4*5	RS-232	GT09-C30R2-25P(3m) Cables prepared by the user (max.: 15m)	(Built into GOT)	GT16, GT15, GT14
			GT15-RS2-9P	GT16, GT15
AJ71UC24 *4*5	RS-422	Cables prepared by the user (max.: 500m)	(Built into GOT)	GT16
		GT09-C30R4-6C(3m) GT09-C100R4-6C(10m) GT09-C200R4-6C(20m) GT09-C300R4-6C(30m) Cables prepared by the user (max.: 500m)	GT16-C02R4-9S	GT16
			GT15-RS2T4-9P *3	GT16, GT15
			GT15-RS4-9S	
			(Built into GOT)	GT14

*1 For cables prepared by the user, refer to the following.
➡ GOT1000 Series Connection Manual (Mitsubishi Electric Products) for GT Works3

*2 If the connection distance exceeds 30m, consider changing the connection type to the connection using a cable prepared by the user or the network connection.

*3 Connect it to the RS-232 interface (built into GOT). It cannot be mounted on GT1655 and GT155□.

*4 The usable device numbers correspond to the device range of AnACPU.

*5 Production of this module has been discontinued.

4) Whenconnecting the GOT with MELSEC-QnA (QnASCPU)

PLC		Cable model *1*2	GOT	
Serial communication/Computer link module	Communication type		Option device	Model
A1SJ71QC24 *5 A1SJ71QC24N *5 A1SJ71QC24N1 *5 A1SJ71QC24-R2 *5 A1SJ71QC24N-R2 *5 A1SJ71QC24N1-R2 *5	RS-232	GT09-C30R2-9P(3m) Cables prepared by the user (max.: 15m)	(Built into GOT)	GT16, GT15, GT14
			GT15-RS2-9P	GT16, GT15
A1SJ71QC24 *5 A1SJ71QC24N *5 A1SJ71QC24N1 *5	RS-422	Cables prepared by the user (max.: 1200m)	(Built into GOT)	GT16
		GT09-C30R4-6C(3m) GT09-C100R4-6C(10m) GT09-C200R4-6C(20m) GT09-C300R4-6C(30m) Cables prepared by the user (max.: 1200m)	GT16-C02R4-9S	GT16
			GT15-RS2T4-9P *3	GT16, GT15
			GT15-RS4-9S	
			(Built into GOT)	GT14
A1SJ71UC24-R2 *4*5 A1SJ71C24-R2 *4*5 A1SJ71UC24-PRF *4*5 A1SJ71C24-PRF *4*5	RS-232	GT09-C30R2-9P(3m) Cables prepared by the user (max.: 15m)	(Built into GOT)	GT16, GT15, GT14
			GT15-RS2-9P	GT16, GT15
A1SJ71UC24-R4 *4*5 A1SJ71C24-R4 *4*5	RS-422	Cables prepared by the user (max.: 500m)	(Built into GOT)	GT16
		GT09-C30R4-6C(3m) GT09-C100R4-6C(10m) GT09-C200R4-6C(20m) GT09-C300R4-6C(30m) Cables prepared by the user (max.: 500m)	GT16-C02R4-9S	GT16
			GT15-RS2T4-9P *3	GT16, GT15
			GT15-RS4-9S	
			(Built into GOT)	GT14

*1 For cables prepared by the user, refer to the following.
➡ GOT1000 Series Connection Manual (Mitsubishi Electric Products) for GT Works3

*2 If the connection distance exceeds 30m, consider changing the connection type to the connection using a cable prepared by the user or the network connection.

*3 Connect it to the RS-232 interface (built into GOT). It cannot be mounted on GT1655 and GT155□.

*4 The usable device numbers correspond to the device range of AnACPU.

*5 Production of this module has been discontinued.

(2) Changing the connection type to the network connection

(a) MELSECNET/10 Connection

Connect the GOT in the following configuration.
Changing the connection type to the MELSECNET/10 connection requires a MELSECNET/10 network module on the PLC side.
The GOT side requires a MELSECNET/H communication unit (used in the MELSECNET/10 mode).

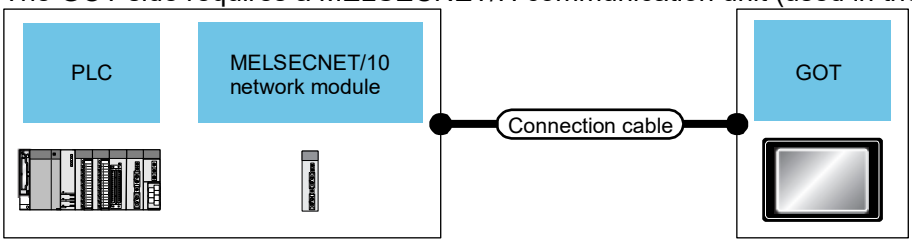

1) When connecting the GOT with MELSEC-A (AnCPU *1, AnSCPU *1) (optical loop system)

PLC		Cable model	GOT	
MELSECNET/H network module	Communication type		Option device	Model
AJ71LP21 *4	MELSECNET/10	Optical fiber cable	GT15-J71LP23-25 *2	GT16, GT15
A1SJ71LP21			GT15-75J71LP23-Z *3	GT15

*1 The following PLCs can be connected: A2UCPU, A2UCPU-S1, A3UCPU, A4UCPU, A2USCPU, A2USCPU-S1, and A2USHCPU-S1.
*2 Set the MELSECNET/10 mode in the controller setting.
*3 Not available for the GT155□.
*4 Production of this module has been discontinued.

2) When connecting the GOT with MELSEC-QnA (QnACPU, QnASCPU) (optical loop system)

PLC		Cable model	GOT	
MELSECNET/H network module	Communication type		Option device	Model
AJ71QLP21 *3 AJ71QLP21S *3 A1SJ71QLP21 A1SJ71QLP21S *3	MELSECNET/10	Optical fiber cable	GT15-J71LP23-25 *1	GT16, GT15
			GT15-75J71LP23-Z *2	GT15

*1 Set the MELSECNET/10 mode in the controller setting.
*2 Not available for the GT155□.
*3 Production of this module has been discontinued.

3) When connecting the GOT with MELSEC-A (AnCPU *1, AnSCPU *1) (coaxial bus system)

PLC		Cable model	GOT	
MELSECNET/H network module	Communication type		Option device	Model
AJ71BR11 *4	MELSECNET/10	Coaxial cable	GT15-J71BR13 *2	GT16, GT15
A1SJ71BR11			GT15-75J71BR13-Z *3	GT15

*1 The following PLCs can be connected: A2UCPU, A2UCPU-S1, A3UCPU, A4UCPU, A2USCPU, A2USCPU-S1, and A2USHCPU-S1.
*2 Set the MELSECNET/10 mode in the controller setting.
*3 Not available for the GT155□.
*4 Production of this module has been discontinued.

4) When connecting the GOT with MELSEC-QnA (QnACPU, QnASCPU) (coaxial bus system)

PLC		Cable model	GOT	
MELSECNET/H network module	Communication type		Option device	Model
AJ71QBR11 *3	MELSECNET/10	Coaxial	GT15-J71BR13 *1	GT16, GT15
A1SJ71QBR11			GT15-75J71BR13-Z *2	GT15

*1 Set the MELSECNET/10 mode in the controller setting.
*2 Not available for the GT155□.
*3 Production of this module has been discontinued.

(b) CC-Link Connection (Intelligent Device Station)

Connect the GOT in the following configuration.
Changing the connection type to the CC-Link (intelligent device station) connection requires a CC-Link module on the PLC side.

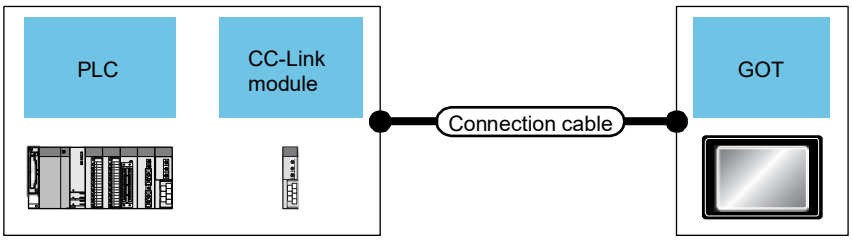

1) When connecting the GOT with MELSEC-A (ACPU *1, AnCPU, AnSCPU)

PLC		Cable model	GOT	
CC-Link module	Communication type		Option device	Model
AJ61BT11 *3	CC-Link (Ver.1)	CC-Link dedicated cable	GT15-J61BT13 *2	GT16, GT15
A1SJ61BT11			GT15-75J61BT13-Z	GT15

*1 Only A0J2HCPU, A0J2HCPUP21, A0J2HCPUR21, and A0J2HCPU-DC24 can be connected.
*2 Specify Ver.1 as the mode setting in the Communication Settings to use it.
*3 Production of this module has been discontinued.

2) When connecting the GOT with MELSEC-QnA (QnACPU, QnASCPU)

PLC		Cable model	GOT	
CC-Link module	Communication type		Option device	Model
AJ61QBT11 *2	CC-Link (Ver.1)	CC-Link dedicated cable	GT15-J61BT13 *1	GT16, GT15
A1SJ61QBT11			GT15-75J61BT13-Z	GT15

*1 Specify Ver.1 as the mode setting in the Communication Settings to use it.
*2 Production of this module has been discontinued.

(c) Ethernet Connection

Connect the GOT in the following configuration.
Changing the connection type to the Ethernet connection requires an Ethernet module on the PLC side.

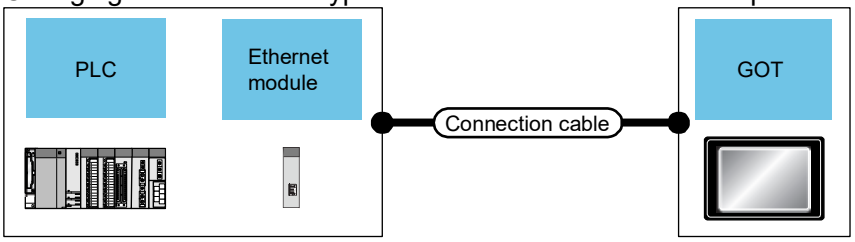

1) When connecting the GOT with MELSEC-A (AnCPU, AnSCPU)

PLC		Cable model	GOT	
Ethernet module	**Communication type**		**Option device**	**Model**
AJ71E71N3-T *3 AJ71E71N-B5 *3 AJ71E71N-B2 *3 AJ71E71N-T *3 AJ71E71N-B5T *3 AJ71E71-S3 *3 A1SJ71E71N3-T *3 A1SJ71E71N-B5 *3 A1SJ71E71N-B2 *3 A1SJ71E71N-T *3 A1SJ71E71N-B5T *3 A1SJ71E71-B5-S3 *3 A1SJ71E71-B2-S3 *3	Ethernet	Twisted pair cable • 10BASE-T • 100BASE-TX	(Built into GOT)	GT16 *1, GT14 *2
			GT15-J71E71-100	GT15

*1 When connecting GT16 of the function version A to an equipment that meets the 10BASE (-T/2/5) standard, use the switching hub and operate in a 10Mbps/100Mbps mixed environment.
For how to check the function version, refer to the following.
➞ GT16 User's Manual (Hardware)

*2 GT14 models compatible with Ethernet connection are only GT1455-QTBDE and GT1450-QMBDE.

*3 Production of this module has been discontinued.

2) When connecting the GOT with MELSEC-QnA (QnACPU, QnASCPU)

PLC		Cable model	GOT	
Ethernet module	Communication type		Option device	Model
AJ71QE71N3-T *3 AJ71QE71N-B5 *3 AJ71QE71N-B2 *3 AJ71QE71N-T *3 AJ71QE71N-B5T *3 AJ71QE71 *3 AJ71QE71-B5 *3	Ethernet	Twisted pair cable • 10BASE-T • 100BASE-TX	(Built into GOT)	GT16 *1, GT14 *2
A1SJ71QE71N3-T *3 A1SJ71QE71N-B5 *3 A1SJ71QE71N-B2 *3 A1SJ71QE71N-T *3 A1SJ71QE71N-B5T *3 A1SJ71QE71-B5 *3 A1SJ71QE71-B2 *3			GT15-J71E71-100	GT15

*1 When connecting GT16 of the function version A to an equipment that meets the 10BASE (-T/2/5) standard, use the switching hub and operate in a 10Mbps/100Mbps mixed environment.
For how to check the function version, refer to the following.
➞ GT16 User's Manual (Hardware)

*2 GT14 models compatible with Ethernet connection are only GT1455-QTBDE and GT1450-QMBDE.

*3 Production of this module has been discontinued.

(3) Changing the connection type when multiple GOTs are connected

Consider the following connection types for the configuration in which the multiple GOTs are connected.

• Network Connection
➞ 2.2.1 ■2 (2) Changing the connection type to the network connection

• Multi-Drop Connection
➞ (a) Multi-Drop Connection

(a) Multi-Drop Connection *1

Connect the GOT in the following configuration.
Changing the connection type to the multi-drop connection requires the following option devices and cables.

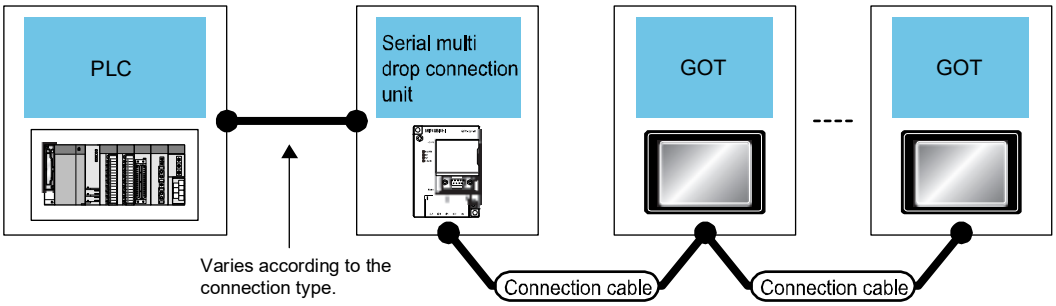

*1 When the number of connected slave GOTs and the device points of each GOT increase, the device update cycle on the screen may get slower. In such a case, it is recommended to reduce the device points of each GOT. (Please consider 250 points as a guide of 1 GOT, and 750 points as a guide of the total points.) In addition, when a timeout error occurs, make the timeout time longer in the communication settings of the slave GOT.

1) When connecting the GOT with MELSEC-A (ACPU, AnCPU, AnSCPU)*1 or MELSEC-QnA (QnACPU *2, QnASCPU)

Multi-Drop Connection Unit		Cable model *3	GOT	
Serial Multi-Drop Connection Unit	Communication type		Option device	Model
GT01-RS4-M	RS-485	User-created cable (500 m max. *6)	FA-LTBGTR4CBL05(0.5m) FA-LTBGTR4CBL10(1m) FA-LTBGTR4CBL20(2m)	GT16
			GT15-RS4-9S	GT16, GT15
			GT15-RS4-TE	GT16, GT15
			GT10-9PT5S *4	GT14
			(Built into GOT)	
			GT14-RS2T4-9P *5	

*1 These PLCs cannot be connected to the serial multi-drop connection unit in the computer link connection.
*2 Q4ARCPU cannot be connected.
*3 For cables prepared by the user, refer to the following.
➡ GOT1000 Series Connection Manual (Mitsubishi Electric Products) for GT Works3
*4 Connect it to the RS-422/485 interface (built into GOT).
*5 Connect it to the RS-232 interface (built into GOT).
*6 The maximum distance from the PLC to the terminal GOT.

5. Communication units and options

5.1 List of replacement models

The GOT-A900 series communication units and options cannot be used with the GOT1000 series. For replacing the GOT-A900 series with the GOT1000 series, use the communication units and the options dedicated to the GOT1000 series.

Table 5-1 Replacement models for communication units and options

Communication format/option	Unit model for GOT-A900 (*2)	Unit model for GOT1000	Remarks
Q bus connection	A9GT-QBUSS A9GT-50WQBUSS	GT15-QBUS G15-75QBUSL (*4)	-
	A9GT-QBUS2S A9GT-50WQBUS2S	GT15-QBUS2 GT15-75QBUS2L (*4)	-
A bus connection	A9GT-BUSS (*1) A9GT-BUSSU (*1) A9GT-50WBUSS (*1)	GT15-ABUS (*10) GT15-75ABUSL (*4*10)	-
	A9GT-BUS2S (*1) A9GT-BUS2SU (*1)	GT15-ABUS2 (*10) GT15-75ABUS2L (*4*10)	
RS-232 connection	A9GT-RS2 A9GT-RS2T A9GT-50WRS2	GOT built-in interface (RS-232)	-
		GT15-RS2-9P	Applicable to GT16/GT15 only
RS-422 connection	A9GT-RS4 A9GT-50WRS4(25-pin connector type)	GOT built-in interface (RS-422)	Applicable to GT16/GT14 only GT16: 14-pin connector type GT14: 9-pin connector type
		GT15-RS2T4-25P (*8)	25-pin connector type Applicable to GT16 (except for GT1655) and GT15 (except for GT155□) only
		GT15-RS4-9S(*5)	9-pin connector type Applicable to GT16/GT15 only
		GT15-RS2T4-9P (*8)	9-pin connector type Applicable to GT16 (except for GT1655) and GT15 (except for GT155□) only
MELSECNET/10 connection	A9GT-QJ71LP23 (*1)	GT15-J71LP23-25	Use the MELSECNET/H communication unit with the MELSECNET/10 mode.
	A9GT-QJ71BR13 (*1)	GT15-J71BR13	Use the MELSECNET/H communication unit with the MELSECNET/10 mode.
MELSECNET(II) connection	A7GT-J71AP23 (*1)	Not available	The network system must be changed to the MELSECNET/H network system. The distance between stations is restricted.
	A7GT-J71AR23 (*1)	Not available	The network system must be changed to the MELSECNET/H network system. The distance between stations is restricted.
MELSECNET/B connection	A7GT-J71AT23B (*1)	Not available	The network system must be changed to the MELSECNET/H network system.
CC-Link connection	A8GT-J61BT13 (*1) A8GT-J61BT15 (*1)	GT15-J61BT13	For replacing A8GT-J61BT15, change the sequence programs (deleting ladder programs) and the screen settings.
Ethernet connection	A9GT-J71E71-T	GOT built-in interface (Ethernet) (*6)	Applicable to GT16/GT14 only
		GT15-J71E71-100 (*6)	Applicable to GT15 only

Communication format/option	Unit model for GOT-A900 (*2)	Unit model for GOT1000	Remarks
Video/RGB interface unit	A9GT-80V4R1	GT16M-V4R1	-
	A9GT-80V4	GT16M-V4	
	A9GT-80R1	GT16M-R2	
External I/O interface	A9GT-70KBF	GT15-DIO (*3)	The cable wiring must be changed because of the increase in the number of I/O points and the different interface pin configuration.
	A8GT-50KBF		
Numeric keypad panel	A8GT-TK	Applicable without replacement (*9)	-
Printer interface	A9GT-50PRF (Parallel interface)	GT15-PRN	The printer model must be changed because the GOT1000 series has a USB interface. (*7)
		GOT built-in interface (RS-232)	The printer model must be changed because the GOT1000 series has a RS-232 interface. (*7)
		GT15-RS2-9P	
PC card interface unit	A1SD59J-MIF	Not available	G16/GT15: Built-in CF card interface G14: Built-in SD card interface

*1 The GOT-A900 series communication unit has setting switches, including rotary switches. Though the GOT1000 series communication unit does not have rotary switches and others, setting switches is required with software. Therefore, set the switches with the drawing software or the utility. For details, refer to Section 4.2.

*2 Production of all the GOT-A900 series units was discontinued.

*3 Specifications of external power supply voltage, external connection connector shape and others are changed. For details, refer to the GT15 External I/O Unit (Positive Common Input/Sink Type Output) User's Manual (IB-0800382).

*4 The slim model has limitation for combination with other units. To use the slim model with the units for the functions, including the external I/O function, the sound output function, the printer function, and the video/RGB I/O function, use the following units.
• GT15-ABUS (A bus connection 1ch), GT15-ABUS2 (A bus connection 2ch),
• GT15-QBUS (Q bus connection 1ch), GT15-QBUS2(Q bus connection 2ch)

*5 To download monitor screen data and others from a personal computer to the GOT via the GOT built-in RS-232 interface, the cable must be replaced.

*6 The A9GT-J71E71-T only supports 10Mbps (10BASE-T). However, the GT15-J71E71-100 and the GT16/GT14 built-in interface (Ethernet) support both 10Mbps (10BASE-T) and 100Mbps (100BASE-TX).
The GT1695 and the GT1685 with function version A do not support 10Mbps (10BASE-T).

*7 Since the Centronics interface (AGT-50PRF) is replaced with the USB interface (GT15-PRN) or the RS-232 interface (GOT built-in interface), change the printer model. For the validated printer models applicable to the GOT1000 series, refer to TECHNICAL BULLETIN GOT-A-0010 "List of Valid Devices Applicable for GOT1000 Series" on the Mitsubishi Electric Factory Automation Global Website.

*8 The GT1655 and GT155□ do not support the GT15-RS2T4-25P and GT15-RS2T4-9P.

*9 The external I/O unit (GT15-DIO) and the external I/O unit connection conversion cable (GT15-C03HTB) are required. The GT15-DIOR cannot be used.

*10 No order was accepted after December 31, 2014, and the production was discontinued in January 31, 2015. To replace a GOT-A900 series unit with a GOT1000 series unit, refer to the following and change the A bus connection to another connection type.
➞ 4.1 Replacing the GOT-A900 series (connected by the A bus connection) with the GOT1000 series

5.2 Units that require new setting method

The communication units for the GOT-A900 series listed below require settings with rotary switches and others on the hardware. However, the communication units for the GOT1000 series do not have rotary switches and others, and settings with the drawing software or the utility are required. For GOT1000 series, refer to the following table.

Table 5-2 Units that require new setting method and new setting method after change

GOT-A900 series communication module			GOT1000 series communication unit	
Item	**Model**	**Settings on hardware**	**Model**	**Setting method**
Bus connection interface board	A9GT-BUSS	(1) I/O slot setting switch (2) Extension number setting switch	GT15-75ABUSL GT15-75ABUS2L GT15-ABUS GT15-ABUS2	Set with the drawing software (GT Designer2 and others) or utility of the GOT.
	A9GT-BUS2S			
	A9GT-50WBUSS			
Bus connection interface module	A9GT-BUSSU			
	A9GT-BUS2SU			
CC-Link communication module	A8GT-J61BT13, A8GT-J61BT15	(1) Mode setting switch: (A8GT-J61BT13 only) Online/Offline (2) Station number setting switch: tens place, ones place (3) Transmission baudrate setting switch (4) Condition setting switch: Input data status of data link faulty station (A8GT-J61BT13 only), number of occupied stations	GT15-J61BT13	
MELSECNET/10 communication module	A9GT-QJ71LP23	(1) Mode setting switch: Online/Offline (2) Station number setting switch: tens place, ones place (3) Group number setting switch: (4) Network number setting switch: hundreds place, tens place, ones place	GT15-J71LP23-25	
	A9GT-QJ71BR13		GT15-J71BR13	

5.3 Communication units and options without replaceable models

The communication units and options for the GOT-A900 series listed below do not have alternative models to be compatible with the GOT1000 series. If replacing with the GOT1000 series is difficult, obtain a sufficient number of spare units.

Table 5-3 Communication modules and options without replaceable models and alternative plans

Category	Item	Model	Alternative plan
Communication module	Data link unit for MELSECNET (II) network system	A7GT-J71AP23	Replacing with the MELSECNET/H network system (GOT1000 series communication unit model: GT15-J71BR13/GT15-J71LP23-25) is recommended. (Section 5.4)
		A7GT-J71AR23	
	Data link unit for MELSECNET/B network system	A7GT-J71AT23B	
	CC-Link communication module (remote device station)	A8GT-J61BT15	Replacing with the CC-Link (intelligent device station) communication unit (GOT1000 series communication unit model: GT15-J61BT13) is recommended. (*1)

*1 • Maximum number of connected units is reduced from 32 to 26. When connecting more than 26 units, consider adding a master station to support the system.
• Remote dedicated commands (initial setting command, continuous read command, random read command, continuous write command, random write command, monitor register command, monitor request command, always write register command, and always write register command) are not supported. Please consult Mitsubishi Electric representative for questions regarding to the remote dedicated command.

5.4 Replacing the GOT-A900 series connected to the MELSECNET(II) or MELSECNET/B network system with the GOT1000 series

When the GOT-A900 series is used in the MELSECNET(II) or MELSECNET/B network system, the GOT-A900 series cannot be replaced with the GOT1000 series since the GOT1000 series does not support the MELSECNET(II) or MELSECNET/B connection.
Consider the replacement with any of the following method.

- Change the MELSECNET(II) or MELSECNET/B network system in the entire system to the MELSECNET/H network system, and replace the GOT-A900 series with the GOT1000 series.
- Without the change of the MELSECNET(II) or MELSECNET/B network system in the entire system, change the connection type between the programmable controller and the GOT, and replace the GOT-A900 series with the GOT1000 series.

5.4.1 Replacing the network in the entire system with the MELSECNET/H network system

Use the following MELSECNET/H communication units for the GOT1000 series.

Model	Specifications
GT15-J71LP23-25	Optical loop unit
GT15-J71BR13	Coaxial bus unit

For details of changing to MELSECNET/H system, refer to Transition from MELSEC-A/QnA (Large Type) Series to Q Series Handbook (Network Modules: L(NA)-08048ENG).

5.4.2 Changing the connection type between the programmable controller and the GOT without change of the network in the entire system

(1) When the existing programmable controller has an empty slot

Add a communication module (for other than the MELSECNET(II), MELSECNET/B, and MELSECNET/10 network systems) to the programmable controller, and change the connection type between the programmable controller and the GOT.

Example of accessing the network via the programmable controller by changing the connection type of the GOT

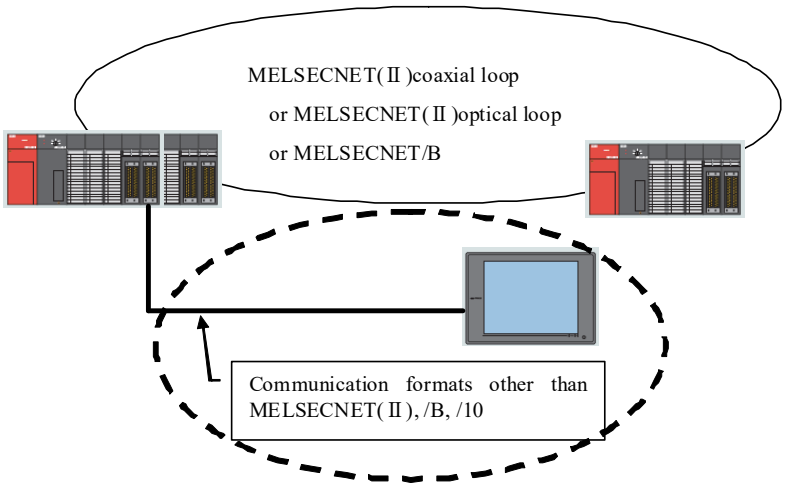

Figure 5-2 Example of replacement configuration when adding a communication module to the programmable controller with an empty slot and connecting the programmable controller to the GOT

The following two restrictions apply when replacing MELSECNET(II) and /B unit

(a) Station number settings need to be changed depending on the station that the GOT is connected to.
- When connecting to the master station, change all station numbers of objects to the host station (0-FF).
- When connecting to local stations, station numbers do not need to be changed.

(b) When using the cyclic device with host station write, the write area of the GOT is unable to use. Therefore, changing the write device and corresponding ladder is required.
To change the devices, use the device batch edit function on the drawing software.

Table 5-4 Communication format between a replacement GOT and a programmable controller, a representative unit model and a connected programmable controller

Replacement communication format	Representative GOT communication unit model	Connected programmable controller
Q bus connection	GT15-QBUS, GT15-75QBUSL	Q series
RS-232 connection	RS-232 port of GOT, GT15-RS2-9P	Q series AnS series QnA(S) series
RS-422 connection	GT15-RS4-9S, GT15-RS2T4-9P	Q series AnS series QnA(S) series

(2) When the existing programmable controller has no empty slot

Add a programmable controller to the network. Add a communication module (for other than the MELSECNET(II), MELSECNET/B, and MELSECNET/10 network systems) to the new programmable controller, and change the connection type between the programmable controller and the GOT.

Example of accessing the network by adding a programmable controller to the network

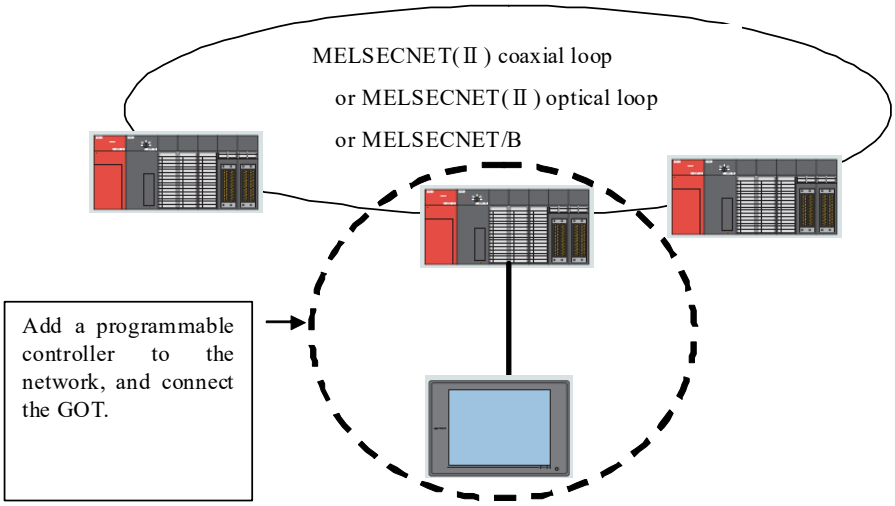

Figure 5-3 Example of replacement configuration when adding a programmable controller to the network and connecting the programmable controller to the GOT

5.5 Replacing the GOT-A900 series connected to the MELSECNET/10 (programmable controller to programmable controller optical loop/coaxial bus) network system with the GOT1000 series

Use the MELSECNET/H communication unit listed in Section 5.4.1, set the MELSECNET/H communication unit to the MELSECNET/10 mode, and connect the GOT to the MELSECNET/10 network system.

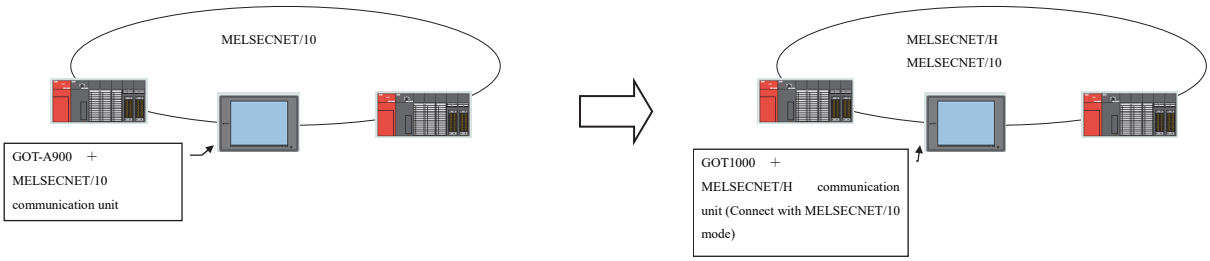

5.6 When using the RUN/OUTPUT terminal of the GOT-A900 series power supply

The GOT1000 series power supply does not have the RUN/OUTPUT terminal.
When you use the RUN/OUTPUT terminal of the GOT-A900 series, consider using the RUN output of the external I/O unit (GT15-DIO).
For the details of the external I/O unit, refer to the following.

- GT15 External I/O Unit (Positive Common Input/Sink Type Output) User's Manual (IB-0800382) (GT15-DIO)
- GT15 External I/O Unit (Negative Common Input/Source Type Output) User's Manual (IB-0800425) (GT15-DIOR)

6. Cables

6.1 Bus connection cables

The following shows the list for replacing the existing GOT-A900 series cables with the GOT1000 series cables.

Table 6-1 Replacement cables of the GOT1000 series

Existing GOT-A900 series cable				Replacement GOT1000 series cable		
Cable		**Cable model**	**Cable length**	**Cable model**	**Cable length**	**Remarks**
Q bus connection cable	Q extension cable GOT-to-GOT connection cable	QC05B	0.45m	QC05B + dedicated ferrite core (GT15-QFC) *1	0.45m	For connection between QCPU and GOT For connection between GOT and GOT
		QC06B	0.6m	QC06B + dedicated ferrite core (GT15-QFC) *1	0.6m	
		QC12B	1.2m	QC12B + dedicated ferrite core (GT15-QFC) *1	1.2m	
		QC30B	3m	QC30B + dedicated ferrite core (GT15-QFC) *1	3m	
		QC50B	5m	QC50B + dedicated ferrite core (GT15-QFC) *1	5m	
		QC100B	10m	QC100B + dedicated ferrite core (GT15-QFC) *1	10m	
	Q long-distance connection cable GOT-to-GOT long-distance connection cable	A9GT-QC150BS	15m	A9GT-QC150BS + dedicated ferrite core (GT15-QFC) *1	15m	For connection between QCPU and GOT (A9GT-QCNB is required.) For connection between GOT and GOT
		A9GT-QC200BS	20m	A9GT-QC200BS + dedicated ferrite core (GT15-QFC) *1	20m	
		A9GT-QC250BS	25m	A9GT-QC250BS + dedicated ferrite core (GT15-QFC) *1	25m	
		A9GT-QC300BS	30m	A9GT-QC300BS + dedicated ferrite core (GT15-QFC) *1	30m	
		A9GT-QC350BS	35m	A9GT-QC350BS + dedicated ferrite core (GT15-QFC) *1	35m	
	Bus extension connector box	A9GT-QCNB	-	Applicable without replacement	-	For QCPU long-distance (13.2m or more) bus connection
A bus connection cable	Large-size CPU extension cable	A8GT-C12NB	1.2m	A8GT-C12NB + dedicated ferrite core (GT15-AFC) *1	1.2m	For connection between QnA/ACPU/motion controller CPU (A series, extension base unit) and GOT
		A8GT-C30NB	3m	A8GT-C30NB + dedicated ferrite core (GT15-AFC) *1	3m	
		A8GT-C50NB	5m	A8GT-C50NB + dedicated ferrite core (GT15-AFC) *1	5m	
		AC06B	0.6m	GT15-AC06B	0.6m	For connection between QnA/ACPU/motion controller CPU (A series, extension base unit) and A7GT-CNB
		AC12B	1.2m	GT15-AC12B	1.2m	
		AC30B	3m	GT15-AC30B	3m	
		AC50B	5m	GT15-AC50B	5m	

Existing GOT-A900 series cable				Replacement GOT1000 series cable		
Cable		**Cable model**	**Cable length**	**Cable model**	**Cable length**	**Remarks**
A bus connection cable	Large-size CPU extension cable	AC06B +A7GT-CNB-BUS-1	0.6m+0.3m	GT15-C06NB	0.6m	For connection between QnA/ACPU/motion controller CPU (A series, extension base unit) and GOT
		AC12B +A7GT-CNB-BUS-1	1.2m+0.3m	GT15-C12NB	1.2m	
		AC30B +A7GT-CNB-BUS-1	3m+0.3m	GT15-C30NB	3m	
		AC50B +A7GT-CNB-BUS-1	5m+0.3m	GT15-C50NB	5m	
		AC12B-R *2	1.2m	GT15-AC12B	1.2m	For connection between QnA/ACPU/motion controller CPU (A series, extension base unit) and A7GT-CNB
		AC30B-R *2	3m	GT15-AC30B	3m	
		AC50B-R *2	5m	GT15-AC50B	5m	
		AC12B-R +A7GT-CNB-BUS-1 *2	1.2m+0.3m	GT15-C12NB	1.2m	For connection between QnA/ACPU/motion controller CPU (A series, extension base unit) and GOT
		AC30B-R +A7GT-CNB-BUS-1 *2	3m+0.3m	GT15-C30NB	3m	
		AC50B-R +A7GT-CNB-BUS-1	5m+0.3m	GT15-C50NB	5m	
		A7GT-C100EXS(-1)	10m	GT15-C100EXSS-1	10m	For long-distance connection between QnAS/AnSCPU/motion controller (A series) and GOT For long-distance connection between A7GT-EXCNB and GOT *Combination product of GT15-EXCNB and GT15-C□BS
		A7GT-C200EXS(-1)	20m	GT15-C200EXSS-1	20m	
		A7GT-C300EXS(-1)	30m	GT15-C300EXSS-1	30m	
		A7GT-C50B	0.5m	GT15-C07BS	0.7m	For connection between GOT and GOT
		A7GT-C100B	10m	GT15-C12BS	1.2m	
		A7GT-C200B	20m	GT15-C30BS	3m	
		A7GT-C250B	25m	GT15-C30BS	3m	
		A7GT-C300B	30m	GT15-C30BS	3m	
		A370C12B-S1	1.2m	A370C12B-S1 + dedicated ferrite core (GT15-AFC) *1	1.2m	For connection between motion controller CPU (A series, main base unit) and GOT
		A370C25B-S1	2.5m	A370C25B-S1 + dedicated ferrite core (GT15-AFC) *1	2.5m	
		A370C12B	1.2m	GT15-A370C12B	1.2m	For connection between motion controller CPU (A series, main base unit) and A7GT-CNB
		A370C25B	2.5m	GT15-A370C25B	2.5m	

Existing GOT-A900 series cable				Replacement GOT1000 series cable		
Cable		**Cable model**	**Cable length**	**Cable model**	**Cable length**	**Remarks**
A bus connection cable	Large-size CPU extension cable	A370C12B +A7GT-CNB-BUS-1	1.2m+0.3m	GT15-A370C12B-S1	1.2m	For connection between motion controller CPU (A series, main base unit) and GOT
		A370C25B +A7GT-CNB-BUS-1	2.5m+0.3m	GT15-A370C25B-S1	2.5m	
	Small-size CPU extension cable GOT-to-GOT connection cable	A1SC07B	0.7m	A1SC07B + dedicated ferrite core (GT15-AFC) *1	0.7m	For connection between QnAS/AnSCPU/motion controller (A series) and GOT For connection between GOT and GOT
		A1SC12B	1.2m	A1SC12B + dedicated ferrite core (GT15-AFC) *1	1.2m	
		A1SC30B	3m	A1SC30B + dedicated ferrite core (GT15-AFC) *1	3m	
		A1SC50B	5m	A1SC50B + dedicated ferrite core (GT15-AFC) *1	5m	
	Small-size CPU extension cable	A1SC05NB	0.5m	A1SC05NB + dedicated ferrite core (GT15-AFC) *1	0.5m	For connection between QnAS/AnSCPU and A7GT-CNB
		A1SC07NB	0.7m	A1SC07NB + dedicated ferrite core (GT15-AFC) *1	1.2m	
		A1SC30NB	3m	A1SC30NB + dedicated ferrite core (GT15-AFC) *1	3m	
		A1SC50NB	5m	A1SC50NB + dedicated ferrite core (GT15-AFC) *1	5m	
		A1SC05NB +A7GT-CNB-BUS-1	0.5m+0.3m	GT15-A1SC07B	0.7m	For connection between QnAS/AnSCPU/motion controller (A series) and GOT
		A1SC07B +A7GT-CNB-BUS-1	0.7m+0.3m	GT15-A1SC07B	0.7m	
		A1SC30NB +A7GT-CNB-BUS-1	3m+0.3m	GT15-A1SC30B	3m	
		A1SC50NB +A7GT-CNB-BUS-1	5m+0.3m	GT15-A1SC50B	5m	
	Small-size CPU long-distance connection cable	A8GT-C100EXSS(-1)	10.6m	A8GT-C100EXSS(-1) + dedicated ferrite core (GT15-AFC) *1	10.6m	For connection between QnAS/AnSCPU/motion controller (A series) and GOT For connection between A7GT-CNB and GOT *Combination product of A8GT-EXCNB and A8GT-C□BS
		A8GT-C200EXSS(-1)	20.6m	A8GT-C200EXSS(-1) + dedicated ferrite core (GT15-AFC) *1	20.6m	
		A8GT-C300EXSS(-1)	30.6m	A8GT-C300EXSS(-1) + dedicated ferrite core (GT15-AFC) *1	30.6m	
	GOT-to-GOT long-distance connection cable	A8GT-C100BS	10m	A8GT-C100BS + dedicated ferrite core (GT15-AFC) *1	10m	For connection between GOT and GOT
		A8GT-C200BS	20m	A8GT-C200BS + dedicated ferrite core (GT15-AFC) *1	20m	
		A8GT-C300BS	30m	A8GT-C300BS + dedicated ferrite core (GT15-AFC) *1	30m	
	A0J2HCPU connection cable	A9GT-J2C10B	1m	A9GT-J2C10B + dedicated ferrite core (GT15-AFC) *1	1m	For connection between A0J2HCPU power supply module (A0J2-PW) and GOT

Existing GOT-A900 series cable				Replacement GOT1000 series cable		
Cable		**Cable model**	**Cable length**	**Cable model**	**Cable length**	**Remarks**
A bus connection cable	Bus connector conversion box	A7GT-CNB	-	Applicable without replacement	-	For QnA/ACPU long-distance bus connection

*1 Purchase the ferrite cores from Mitsubishi Electric System & Service Co., Ltd. (The GT15-QFC or the GT15-AFC includes two ferrite cores for a cable.)

*2 The existing right angle cables must be replaced with the normal cables because the GOT1000 series has no right angle cables.

6.1.1 Replacing GOT when using multiple units of bus connection

When multiple GOT-A900 series are connected with the bus connection, one or more GOT-A900 series can be replaced with the GOT1000 series by replacing all the bus connection cables with the GOT1000 series cables or by attaching ferrite cores (listed in Section 5.1) to the GOT-A900 series cables. Therefore, the GOT-A900 series and the GOT1000 series can exist in the same system.

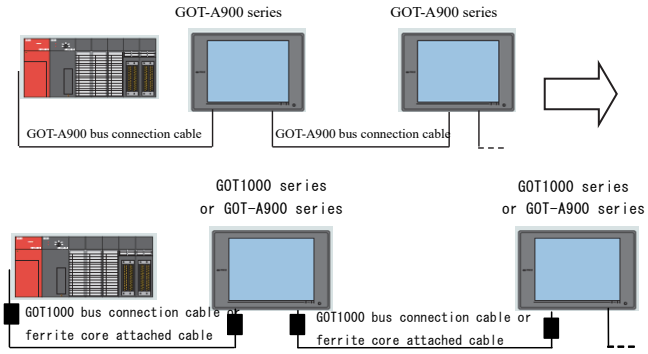

6.2 RS-232 cable

Table 6-2 Replacement cables of the GOT1000 series

Existing GOT-A900 series cable				Replacement GOT1000 series cable		
Cable		**Cable model**	**Cable length**	**Cable model**	**Cable length**	**Remarks**
RS-232 cable	CPU direct connection cable	QC30R2	3m	GT01-C30R2-6P	3m	For connection between QCPU and GOT
	QCPU direct connection cable	AC30R4-25P +FA-CNV2402CBL	3m+0.2m	GT01-C30R4-25P+FA-CNV2402CBL	3m+0.2m	For connection between QCPU and GOT
		AC30R4-25P +FA-CNV2405CBL	3m+0.5m	GT01-C30R4-25P+FA-CNV2405CBL	3m+0.5m	
		AC100R4-25P +FA-CNV2402CBL	10m+0.2m	GT01-C100R4-25P+FA-CNV2402CBL	10m+0.2m	
		AC100R4-25P +FA-CNV2405CBL	10m+0.5m	GT01-C100R4-25P+FA-CNV2405CBL	10m+0.5m	
		AC300R4-25P +FA-CNV2402CBL	30m+0.2m	GT01-C300R4-25P+FA-CNV2402CBL	30m+0.2m	
		AC300R4-25P +FA-CNV2405CBL	30m+0.5m	GT01-C300R4-25P+FA-CNV2405CBL	30m+0.5m	
	FX function extension board connection cable	AC30R2-9SS	3m	GT01-C30R2-9S	3m	For QnA/ACPU long-distance bus connection
		FX-232CAB-1	3m			

6.3 RS-422 cable

Table 6-3 Replacement cables of the GOT1000 series

Existing GOT-A900 series cable				Replacement GOT1000 series cable		
Cable		**Cable model**	**Cable length**	**Cable model**	**Cable length**	**Remarks**
RS-422 cable	QnA/A/FXCPU direct connection cable, Computer link cable, AJ65BT-G4 cable	AC30R4-25P	3m	For GT16 AC30R4-25P + GT16-C02R4-25S *Use the built-in RS-422/485 interface.	3m+0.2m	For connection between QnA/A/FX(FX1, FX2, FX2c) CPU and GOT, For connection between FA-CNV□CBL and GOT, For connection between FX-2PIF and GOT, For connection between FX-422AW0 and GOT, For connection between serial communication module (AJ71QC24(N)-R4) and GOT, For connection between AJ65BT-G4-S3 and GOT
				For GT16 (excluding GT165□) Existing cable (AC30R4-25P) + RS-422 conversion unit (GT15-RS2T4-25P) + GOT built-in RS-232 interface	3m	
				For GT15 (excluding GT155□) Existing cable (AC30R4-25P) *Connect the RS-422 conversion unit (GT15-RS2T4-25P) to the built-in RS-232 interface of the GOT.	3m	
				For GT155□ GT01-C30R4-25P *Use the RS-422 serial communication unit (GT15-RS4-9S).	3m	
				For GT14 GT01-C30R4-25P	3m	
		AC100R4-25P	10m	For GT16 AC100R4-25P + GT16-C02R4-25S *Use the built-in RS-422/485 interface.	10m+0.2m	
				For GT16 (excluding GT165□) Existing cable (AC100R4-25P) + RS-422 conversion unit (GT15-RS2T4-25P) + GOT built-in RS-232 interface	10m	
				For GT15 (excluding GT155□) Existing cable (AC100R4-25P) *Connect the RS-422 conversion unit (GT15-RS2T4-25P) to the built-in RS-232 interface of the GOT.	10m	
				For GT155□ GT01-C100R4-25P *Use the RS-422 serial communication unit (GT15-RS4-9S).	10m	
				For GT14 GT01-C100R4-25P	10m	

Existing GOT-A900 series cable				Replacement GOT1000 series cable		
Cable		**Cable model**	**Cable length**	**Cable model**	**Cable length**	**Remarks**
RS-422 cable	QnA/A/FXCPU direct connection cable, Computer link cable, AJ65BT-G4 cable	AC300R4-25P	30m	For GT16 AC300R4-25P + GT16-C02R4-25S *Use the built-in RS-422/485 interface.	30m+0.2m	For connection between QnA/A/FX(FX1, FX2, FX2c) CPU and GOT, For connection between FA-CNV□CBL and GOT, For connection between FX-2PIF and GOT, For connection between FX-422AW0 and GOT, For connection between serial communication module (AJ71QC24(N)-R4) and GOT, For connection between AJ65BT-G4-S3 and GOT
				For GT16 (excluding GT165□) Existing cable (AC300R4-25P) + RS-422 conversion unit (GT15-RS2T4-25P) + GOT built-in RS-232 interface	30m	
				For GT15 (excluding GT155□) Existing cable (AC300R4-25P) *Connect the RS-422 conversion unit (GT15-RS2T4-25P) to the built-in RS-232 interface of the GOT.	30m	
				For GT155□ GT01-C300R4-25P *Use the RS-422 serial communication unit (GT15-RS4-9S).	30m	
				For GT14 GT01-C300R4-25P	30m	
	FXCPU direct connection cable FX function extension board connection cable	FX9GT-CAB0-150	1m	GT01-C10R4-8P	1m	For connection between FXCPU (FX0, FX0S, FX0N, FX1S, FX1N, FX2N, FX2NC) and GOT For connection between FXCPU extension board (FX1N-422-BD, FX2N-422-BD) and GOT
		FX9GT-CAB0	3m	GT01-C30R4-8P	3m	
		FX9GT-CAB0-10M	10m	GT01-C100R4-8P	10m	
		AC30R4-25P +FX-422AW0	3m+1.5m	GT01-C10R4-8P	1m	
		AC100R4-25P +FX-422AW0	10m+1.5m	GT01-C100R4-8P	10m	
		AC300R4-25P +FX-422AW0	30m+1.5m	GT01-C300R4-8P	30m	

6.4 Network cable (MELSECNET/10, Ethernet, and CC-Link)

The GOT-A900 series network cables are applicable to the GOT1000 series models.

6.5 Other cables

Table 6-4 Treatment for other existing cables

Existing GOT-A900 series cable			Replacement GOT1000 series cable		
Cable	**Cable model**	**Cable length**	**Cable model**	**Cable length**	**Remarks**
Printer cable	AC30PIO-20P	3m	For printer unit (GT15-PRN), GT09-C30USB-5P	3m	GOT-A900 series: Parallel interface GOT1000 series: USB or RS-232 interface
			For serial printer, cables prepared by user	-	
CRT connection cable	AV50VG	5m	Applicable without replacement	-	-
	AV300VG	30m	Applicable without replacement	-	-
Video image display coaxial cable	cables prepared by user	-	Applicable without replacement	-	-
Nine-core combined cable for displaying the RGB screen	cables prepared by user	-	Applicable without replacement	-	-

7. Mounting intervals

When replacing the GOT-A900 series with the GOT1000 series, some models and connection methods require larger mounting intervals than the GOT-A900 series. Among mounting intervals (dimensions from A to F in the figure below), only A and F dimensions will have larger intervals. Cautions for replacement are described below.
For intervals required for each product, refer to the product installation interval section in the GOT1000 catalog.
In addition, when installing a communication unit or option unit on the GOT to use the multi-channel function, refer to user's manual of each communication unit and/or option for E and F dimensions.

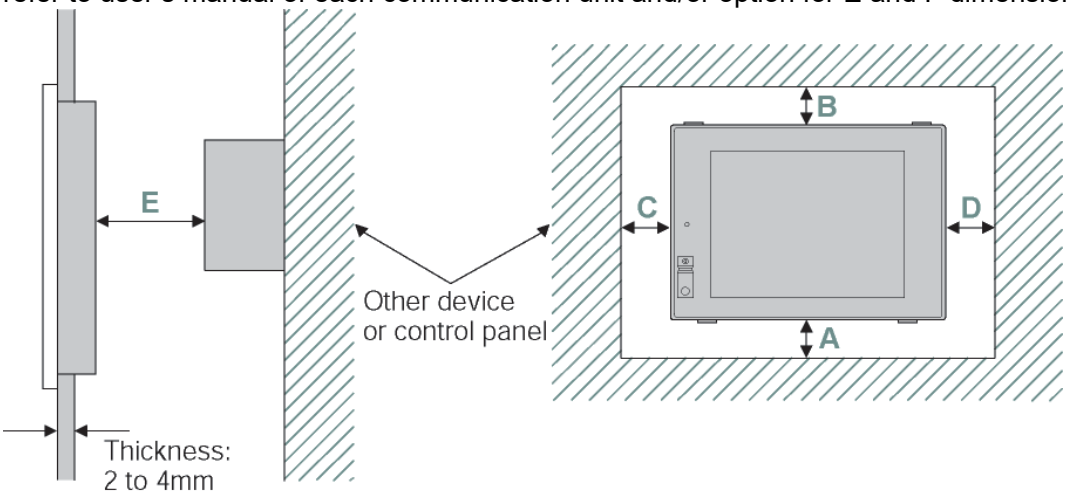

7.1 Downward dimension (A dimension)

7.1.1 Bus connection

When replacing the GOT-A900 series bus connection unit with the one in the GOT1000 series, additional dimension (A dimension) is required. The dimension of each model is listed below.

Table 7-1 Downward dimension (A dimension) when connecting a bus connection unit

(Unit: mm)

GOT-A900 series in present use				Alternative model		
GOT model		Bus connection interface module model	A dimension	GOT model	Bus connection unit model	A dimension
A985GOT *2	A985GOT-TBA-V	A9GT-BUSSU A9GT-BUS2SU A9GT-QBUS2SU	30 or more	GT1685M-STBA	GT15-ABUS GT15-ABUS2 GT15-QBUS GT15-QBUS2 GT15-75ABUSL GT15-75ABUS2L GT15-75QBUSL GT15-75QBUS2L	50 or more (20 or more) *1
				GT1585V-STBA		
	A985GOT-TBD-V			GT1685M-STBD		
				GT1585V-STBD		
	A985GOT-TBA			GT1685M-STBA		
				GT1585-STBA		
	A985GOT-TBD			GT1685M-STBD		
				GT1585-STBD		
	A985GOT-TBA-EU			GT1685M-STBA		
				GT1585-STBA		

GOT-A900 series in present use				Alternative model		
GOT model		**Bus connection interface module model**	**A dimension**	**GOT model**	**Bus connection unit model**	**A dimension**
A975GOT *2	A975GOT-TBA-B	A9GT-BUSSU A9GT-BUS2SU A9GT-QBUS2SU	15 or more	GT1675M-VTBA	GT15-ABUS GT15-ABUS2 GT15-QBUS GT15-QBUS2 GT15-75ABUSL GT15-75ABUS2L GT15-75QBUSL GT15-75QBUS2L	For GT16 50 or more (26 or more) *1 For GT15 50 or more (35 or more) *1
				GT1575-VTBA		
	A975GOT-TBD-B			GT1675M-VTBD		
				GT1575-VTBD		
	A975GOT-TBA			GT1675M-VTBA		
				GT1575-VTBA		
	A975GOT-TBD			GT1675M-VTBD		
				GT1575-VTBD		
	A975GOT-TBA-EU			GT1675M-VTBA		
				GT1575-VTBA		
A970GOT *2	A970GOT-TBA-B	A9GT-BUSSU A9GT-BUS2SU A9GT-QBUS2SU	15 or more	GT1675M-VTBA	GT15-ABUS GT15-ABUS2 GT15-QBUS GT15-QBUS2 GT15-75ABUSL GT15-75ABUS2L GT15-75QBUSL GT15-75QBUS2L	For GT16 50 or more (26 or more) *1 For GT15 50 or more (35 or more) *1
				GT1575-VTBA		
	A970GOT-TBD-B			GT1675M-VTBD		
				GT1575-VTBD		
	A970GOT-TBA			GT1675M-VTBA		
				GT1575-VTBA		
	A970GOT-TBD			GT1675M-VTBD		
				GT1575-VTBD		
	A970GOT-TBA-EU			GT1675M-VTBA		
				GT1575-VTBA		
	A970GOT-SBA			GT1675-VNBA		
				GT1575-VNBA		
	A970GOT-SBD			GT1675-VNBD		
				GT1575-VNBD		
	A970GOT-SBA-EU			GT1675-VNBA		
				GT1575-VNBA		
	A970GOT-LBA			GT1672-VNBA		
				GT1572-VNBA		
				GT1662-VNBA		For GT16 50 or more (36 or more) *1 For GT15 50 or more (40 or more) *1
				GT1562-VNBA		
	A970GOT-LBD			GT1672-VNBD		For GT16 50 or more (26 or more) *1 For GT15 50 or more (35 or more) *1
				GT1572-VNBD		
				GT1662-VNBD		For GT16 50 or more (36 or more) *1 For GT15 50 or more (40 or more) *1
				GT1562-VNBD		

GOT-A900 series in present use				Alternative model		
GOT model		**Bus connection interface module model**	**A dimension**	**GOT model**	**Bus connection unit model**	**A dimension**
A970GOT *2	A970GOT-LBA-EU	A9GT-BUSSU A9GT-BUS2SU A9GT-QBUS2SU	15 or more	GT1672-VNBA	GT15-ABUS GT15-ABUS2 GT15-QBUS GT15-QBUS2 GT15-75ABUSL GT15-75ABUS2L GT15-75QBUSL GT15-75QBUS2L	For GT16 50 or more (26 or more) *1 For GT15 50 or more (35 or more) *1
				GT1572-VNBA		
				GT1662-VNBA		For GT16 50 or more (36 or more) *1 For GT15 50 or more (40 or more) *1
				GT1562-VNBA		
A960GOT *2	A960GOT-EBA		30 or more	GT1662-VNBA		For GT16 50 or more (36 or more) *1 For GT15 50 or more (40 or more) *1
				GT1562-VNBA		
	A960GOT-EBD			GT1662-VNBD		
				GT1562-VNBD		
	A960GOT-EBA-EU			GT1662-VNBA		
				GT1562-VNBA		
A956WGOT	A956WGOT-TBD	A9GT-BUSSU A9GT-BUS2SU	105 or more	GT1655-VTBD		50 or more
				GT1555-VTBD		
A956GOT	A956GOT-TBD(-M3)	A9GT-BUSSU A9GT-BUS2SU A9GT-QBUS2SU	130 or more	GT1655-VTBD		
				GT1555-QTBD		
	A956GOT-SBD(-M3)-B			GT1655-VTBD		
				GT1555-QSBD		
	A956GOT-SBD(-M3)			GT1655-VTBD		
				GT1555-QSBD		
	A956GOT-LBD(-M3)			GT1655-VTBD		
				GT1550-QLBD		
A951GOT	A951GOT-(Q)TBD(-M3)	(Built-in)		GT1655-VTBD		
				GT1555-QTBD		
	A951GOT-(Q)SBD(-M3)-B			GT1655-VTBD		
				GT1555-QSBD		
	A951GOT-(Q)SBD(-M3)			GT1655-VTBD		
				GT1555-QSBD		
	A951GOT-(Q)LBD(-M3)			GT1655-VTBD		
				GT1550-QLBD		

*1 When there is no equipment which produces radiation noise (such as contactor) or generates heat around the GOT, dimension in ( ) can be applied; however, the ambient temperature of the GOT should be under 55°C.

*2 To use the sound output function and/or RGB output function, corresponding option unit is required. For details, refer to Chapter 3. In addition, the multi-channel function is required for GOT1000 series.
Refer to the chapter of the multi-channel function in the following manuals.
- GOT1000 Series Connection Manual (SH-080532ENG)
- GOT1000 Series Connection Manual (Microcomputer, MODBUS Products, Peripherals) for GT Works3 (SH-080871ENG)

7.2 Depth dimension (F dimension)

Mounting interval of product (E dimension) should be more than 100 mm.
When using a bus connection (bus connection interface board) or connecting to a printer, the depth (F dimension) increases on replacing with the GOT1000 series.
Necessary depth (F dimension) of each connection type and model are listed below.
In the case of using multi-channel connection, please consider additional space to attach communication units.
For details, refer to the external dimensions in APPENDICES of the GT15 User's Manual (SH-080528ENG) or the GT16 User's Manual (Hardware) (SH-080928ENG).

7.2.1 Bus connection

Table 7-2 Depth dimension (F dimension) when using the bus connection

(Unit: mm)

GOT-A900 series in present use				Alternative model		
GOT model		F dimension		GOT model	F dimension	
		Bus connection unit model A9GT-BUSS A9GT-BUS2S A9GT-QBUSS A9GT-QBUS2S	Built-in bus connection unit		Bus connection unit model GT15-ABUS GT15-ABUS2 GT15-QBUS GT15-QBUS2	Bus connection unit model GT15-75ABUSL GT15-75ABUS2L GT15-75QBUSL GT15-75QBUS2L
A985GOT	A985GOT-TBA-V	43	-	GT1685M-STBA	64	51
				GT1585V-STBA		
	A985GOT-TBD-V			GT1685M-STBD		
				GT1585V-STBD		
	A985GOT-TBA			GT1685M-STBA		
				GT1585-STBA		
	A985GOT-TBD			GT1685M-STBD		
				GT1585-STBD		
	A985GOT-TBA-EU			GT1685M-STBA		
				GT1585-STBA		
A975GOT	A975GOT-TBA-B	40	-	GT1675M-VTBA	64	51
				GT1575-VTBA		
	A975GOT-TBD-B			GT1675M-VTBD		
				GT1575-VTBD		
	A975GOT-TBA			GT1675M-VTBA		
				GT1575-VTBA		
	A975GOT-TBD			GT1675M-VTBD		
				GT1575-VTBD		
	A975GOT-TBA-EU			GT1675M-VTBA		
				GT1575-VTBA		
A970GOT	A970GOT-TBA-B	40	-	GT1675M-VTBA	64	51
				GT1575-VTBA		
	A970GOT-TBD-B			GT1675M-VTBD		
				GT1575-VTBD		
	A970GOT-TBA			GT1675M-VTBA		
				GT1575-VTBA		
	A970GOT-TBD			GT1675M-VTBD		
				GT1575-VTBD		

GOT-A900 series in present use				Alternative model		
GOT model		F dimension		GOT model	F dimension	
		Bus connection unit model A9GT-BUSS A9GT-BUS2S A9GT-QBUSS A9GT-QBUS2S	Built-in bus connection unit		Bus connection unit model GT15-ABUS GT15-ABUS2 GT15-QBUS GT15-QBUS2	Bus connection unit model GT15-75ABUSL GT15-75ABUS2L GT15-75QBUSL GT15-75QBUS2L
A970GOT	A970GOT-TBA-EU	40	-	GT1675M-VTBA	64	51
				GT1575-VTBA		
	A970GOT-SBA			GT1675-VNBA		
				GT1575-VNBA		
	A970GOT-SBD			GT1675-VNBD		
				GT1575-VNBD		
	A970GOT-SBA-EU			GT1675-VNBA		
				GT1575-VNBA		
	A970GOT-LBA			GT1672-VNBA		
				GT1572-VNBA		
				GT1662-VNBA	69	56
				GT1562-VNBA		
	A970GOT-LBD			GT1672-VNBD	64	51
				GT1572-VNBD		
				GT1662-VNBD	69	56
				GT1562-VNBD		
	A970GOT-LBA-EU			GT1672-VNBA	64	51
				GT1572-VNBA		
				GT1662-VNBA	69	56
				GT1562-VNBA		
A960GOT	A960GOT-EBA	43	-	GT1562-VNBA	69	56
	A960GOT-EBD			GT1562-VNBD		
	A960GOT-EBA-EU			GT1562-VNBA		
A956WGOT	A956WGOT-TBD	65.8 (A9GT-50WQBUSS A9GT-50WBUSS)	-	GT1655-VTBD	77	64
				GT1555-VTBD		
A951GOT	A951GOT-(Q)TBD(-M3)	-	59	GT1655-VTBD	77	64
				GT1555-QTBD		
	A951GOT-(Q)SBD(-M3)-B			GT1655-VTBD		
				GT1555-QSBD		
	A951GOT-(Q)SBD(-M3)		51	GT1655-VTBD		
				GT1555-QSBD		
	A951GOT-(Q)LBD(-M3)			GT1655-VTBD		
				GT1550-QLBD		

7.2.2 Printer connection

Table 7-3 Depth dimension (F dimension) when connecting a printer

(Unit: mm)

GOT-A900 series in present use				Alternative model	
GOT model		F dimension		GOT model	F dimension
		N/A (Built-in printer interface)	Option unit model A9GT-50PRF		Option unit model GT15-PRN
A985GOT	A985GOT-TBA-V	43	-	GT1685M-STBA	64
				GT1585V-STBA	
	A985GOT-TBD-V			GT1685M-STBD	
				GT1585V-STBD	
	A985GOT-TBA			GT1685M-STBA	
				GT1585-STBA	
	A985GOT-TBD			GT1685M-STBD	
				GT1585-STBD	
	A985GOT-TBA-EU			GT1685M-STBA	
				GT1585-STBA	
A975GOT	A975GOT-TBA-B	40	-	GT1675M-VTBA	64
				GT1575-VTBA	
	A975GOT-TBD-B			GT1675M-VTBD	
				GT1575-VTBD	
	A975GOT-TBA			GT1675M-VTBA	
				GT1575-VTBA	
	A975GOT-TBD			GT1675M-VTBD	
				GT1575-VTBD	
	A975GOT-TBA-EU			GT1675M-VTBA	
				GT1575-VTBA	
A970GOT	A970GOT-TBA-B	40	-	GT1675M-VTBA	64
				GT1575-VTBA	
	A970GOT-TBD-B			GT1675M-VTBD	
				GT1575-VTBD	
	A970GOT-TBA			GT1675M-VTBA	
				GT1575-VTBA	
	A970GOT-TBD			GT1675M-VTBD	
				GT1575-VTBD	
	A970GOT-TBA-EU			GT1675M-VTBA	
				GT1575-VTBA	
	A970GOT-SBA			GT1675-VNBA	
				GT1575-VNBA	
	A970GOT-SBD			GT1675-VNBD	
				GT1575-VNBD	
	A970GOT-SBA-EU			GT1675-VNBA	
				GT1575-VNBA	
A970GOT	A970GOT-LBA	40	-	GT1672-VNBA	64
				GT1572-VNBA	
				GT1662-VNBA	69
				GT1562-VNBA	
	A970GOT-LBD			GT1672-VNBD	64
				GT1572-VNBD	
				GT1662-VNBD	69
				GT1562-VNBD	

GOT-A900 series in present use				Alternative model	
GOT model		F dimension		GOT model	F dimension
		N/A (Built-in printer interface)	Option unit model A9GT-50PRF		Option unit model GT15-PRN
A970GOT	A970GOT-LBA-EU	40	-	GT1672-VNBA	64
				GT1572-VNBA	
				GT1662-VNBA	69
				GT1562-VNBA	
A960GOT	A960GOT-EBA	43	-	GT1662-VNBA	69
				GT1562-VNBA	
	A960GOT-EBD			GT1662-VNBD	
				GT1562-VNBD	
	A960GOT-EBA-EU			GT1662-VNBA	
				GT1562-VNBA	
A956WGOT	A956WGOT-TBD	-	65.8 (When installing A9GT-50PRF on the control panel)	GT1655-VTBD	77
				GT1555-VTBD	
A956GOT	A956GOT-TBD(-M3)	-	59 (When installing A9GT-50PRF on the control panel)	GT1655-VTBD	77
				GT1555-QTBD	
	A956GOT-SBD(-M3)-B			GT1655-VTBD	
				GT1555-QSBD	
	A956GOT-SBD(-M3)		51 (When installing A9GT-50PRF on the control panel)	GT1655-VTBD	
				GT1555-QSBD	
	A956GOT-LBD(-M3)			GT1655-VTBD	
				GT1550-QLBD	
A953GOT	A953GOT-TBD(-M3)		59 (When installing A9GT-50PRF on the control panel)	GT1655-VTBD	77
				GT1555-QTBD	
				GT1455-QTBD	49 (GT15-PRN is not required.)
				GT1455-QTBDE	
	A953GOT-SBD(-M3)-B			GT1655-VTBD	77
				GT1555-QSBD	
				GT1455-QTBD	49 (GT15-PRN is not required.)
				GT1455-QTBDE	
	A953GOT-SBD(-M3)		51 (When installing A9GT-50PRF on the control panel)	GT1655-VTBD	77
				GT1555-QSBD	
				GT1455-QTBD	49 (GT15-PRN is not required.)
				GT1455-QTBDE	
	A953GOT-LBD(-M3)		51 (When installing A9GT-50PRF on the control panel)	GT1655-VTBD	77
				GT1550-QLBD	
				GT1450-QLBD	49 GT15-PRN is not required.)
				GT1450-QLBDE	

GOT-A900 series in present use				Alternative model	
GOT model		F dimension		GOT model	F dimension
		N/A (Built-in printer interface)	Option unit model A9GT-50PRF		Option unit model GT15-PRN
A951GOT	A951GOT-(Q)TBD(-M3)	-	59 (When installing A9GT-50PRF on the control panel)	GT1655-VTBD	77
				GT1555-QTBD	
	A951GOT-(Q)SBD(-M3)-B			GT1655-VTBD	
				GT1555-QSBD	
	A951GOT-(Q)SBD(-M3)		51 (When installing A9GT-50PRF on the control panel)	GT1655-VTBD	
				GT1555-QSBD	
	A951GOT-(Q)LBD(-M3)			GT1655-VTBD	
				GT1550-QLBD	
A950GOT	A950GOT-TBD(-M3)	-	59 (When installing A9GT-50PRF on the control panel)	GT1655-VTBD	77
				GT1555-QTBD	
				GT1455-QTBD	49 (GT15-PRN is not required.)
				GT1455-QTBDE	
	A950GOT-SBD(-M3)-B			GT1655-VTBD	77
				GT1555-QSBD	
				GT1455-QTBD	49 (GT15-PRN is not required.)
				GT1455-QTBDE	
	A950GOT-SBD(-M3)		51 (When installing A9GT-50PRF on the control panel)	GT1655-VTBD	77
				GT1555-QSBD	
				GT1455-QTBD	49 (GT15-PRN is not required.)
				GT1455-QTBDE	
	A950GOT-LBD(-M3)			GT1655-VTBD	77
				GT1550-QLBD	
				GT1450-QLBD	49 (GT15-PRN is not required.)
				GT1450-QLBDE	

8. PC (CF, SD) card insertion direction

The GOT-A900 series requires inserting a PC (CF, SD) card from the side of the GOT, and the GT16/GT15 (8.4”or larger model) or the GT14 requires inserting the PC (CF, SD) card from the GOT rear face. Make sure to have enough depth dimension and others.

(1) GOT-A900 series

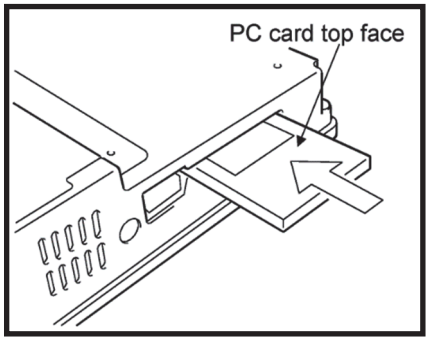

(2) GT16 model (8.4" or larger model), GT15 model (8.4" or larger model) and GT14 model

GT16 (8.4" or larger model)

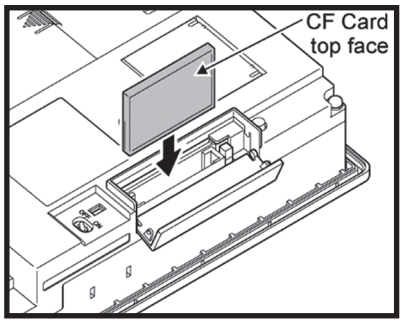

GT15 (8.4" or larger model)

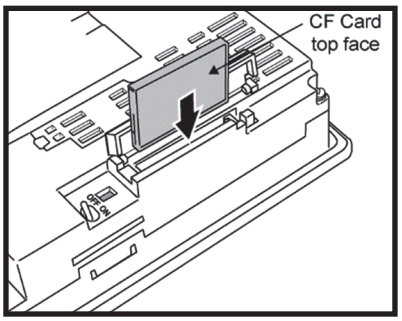

GT14

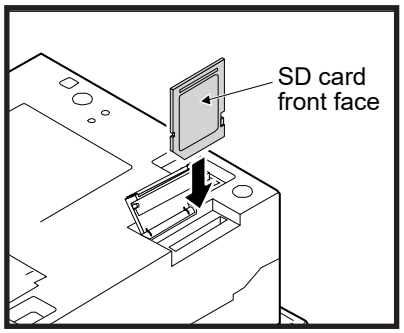

When mounting the GOT, more than 100 mm of mounting depth is required in order to insert/remove the CF/SD card.

(3) GT1655, GT155□ and GT115□: Insert the CF card into the CF card interface from the side of the GOT.

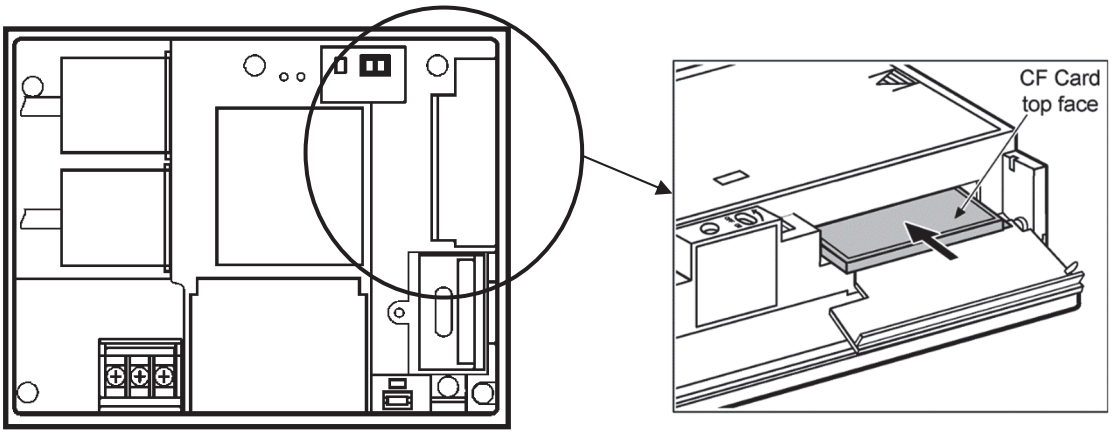

(4) GT15-CFCD: Insert the CF card into the CF card interface from the side of the CF card unit.

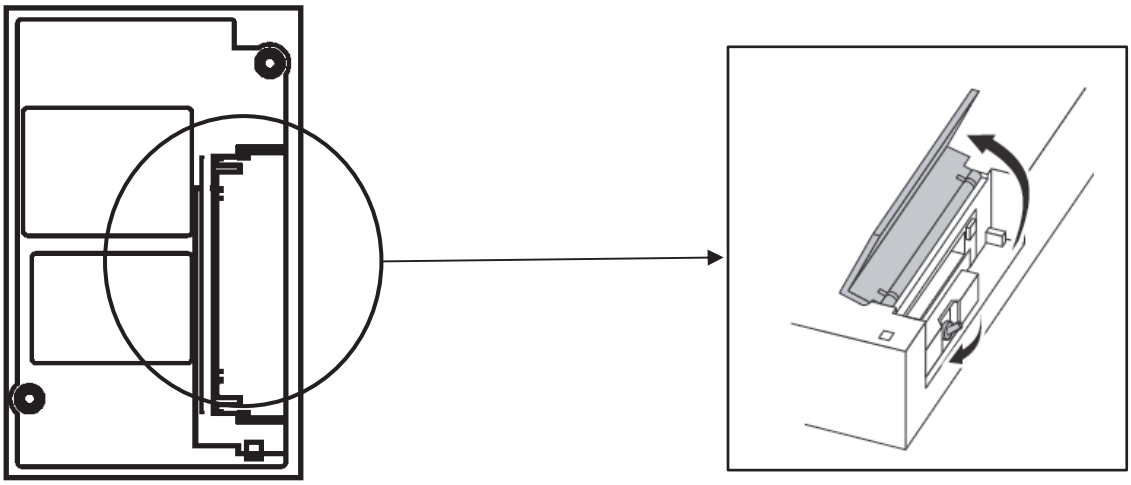

REVISIONS

Version	Print Date	Revision
-	September 2005	- First edition
A	January 2006	- Added description to “2. Selection of GOT.” - Revised “Unusable functions after replacement” of “3. Monitor screen data.” - Revised “Functions that need new settings of “3. Monitor screen data.” - Added “Printers” to “3. Monitor screen data.” - Added “Printer connection” to “6. Mounting intervals.”
B	September 2006	- Added models (revised entirely)
C	November 2008	- Added description of GT16.
D	May 2009	- Added 10.4” and 8.4” models of GT16.
E	-	-
F	October 2010	- Corrected description in “2. Selection of GOT”. - Added description of the serial printer to "3.1.1 Functions that require new settings”. - Added description of the serial printer to “3.1.2 Printers”. - Added description to *15 in “4.3 Communication units and options without replaceable models”. - Added “4.6 When using the RUN/OUTPUT terminal of the GOT-A900 series power supply”. - Revised description of “5.1.2 Replacing GOT when using multiple units of bus connection". - Revised description of “5.2 RS-232 cable" and“5.3 RS-422 cable”. - Corrected description of “6. Mounting intervals”.
G	February 2011	- Added description of the GT1655 to "2. Selection of GOT.” and " 7. PC (CF) card insertion direction".
H	-	- Revised description of "4.1 List of replacement models" and "5.2 RS-232 cable".
I	February 2014	- Revised description of "2. Selection of GOT", "3. Monitor screen data", "4. Communication units and options", "5. Cables”, and "6. Mounting intervals". - Added "3.4 Change of the utility call key setting".
J	May 2015	- Added descriptions of GT1450-QMBD(E). - Added "4. Communication".
K	-	-
L	February 2019	- Revised erroneous descriptions and updated contents
M	August 2019	- Revised erroneous descriptions and updated contents
N	November 2023	- Revised erroneous descriptions and updated contents
P	September 2026	- Revised erroneous descriptions and updated contents