MITSUBISHI ELECTRIC

TECHNICAL BULLETIN

[Issue No.] GOT-A-0062-F

[Title] Precautions when Replacing GOT-A900 Series with GOT2000 Series

[Date of Issue] January 2015 (Ver. F: September 2026)

[Relevant Models] GOT-A900 Series → GOT2000 Series (GT27 Models and GT25 Models)

Thank you for your continued support of Mitsubishi Electric Graphic Operation Terminal (GOT).
We released the GOT2000 series with high functions and performance as an alternative of the GOT-A900 series in September 2013. We highly recommend that you replace the GOT-A900 series with the GOT2000 series for using new sophisticated features.

Contents

1. Requests for customers 3
2. Replacement models 3
   2.1 GOT 3
   2.2 Communication 7
      2.2.1 A bus connection 7
   2.3 Communication unit 17
      2.3.1 Units that require new setting method 18
      2.3.2 Communication units and options without replaceable models 18
      2.3.3 Precautions for replacement of communication units 19
   2.4 Option unit 19
      2.4.1 Precautions for replacement of option units 20
   2.5 Option 21
   2.6 Cable 22
      2.6.1 Q bus connection cable 22
      2.6.2 RS-232 cable 23
      2.6.3 RS-422 cable 23
      2.6.4 Network cable (Ethernet, MELSECNET/10, and CC-Link) 24
      2.6.5 Other cables 24
   2.7 Software 24
   2.8 License 24
3. Comparison in specifications 25
   3.1 Hardware specifications 25
      3.1.1 Comparison in hardware specifications 25
      3.1.2 Installing the GOT 30
      3.1.3 Memory card insertion direction 46
      3.1.4 Comparison in utility specifications 47
      3.1.5 Precautions for hardware replacement 48
      3.1.6 Precautions for arrangement of a 2-point press switch 48
   3.2 Function specifications 51
      3.2.1 Comparison in functions 51
      3.2.2 Detailed comparison in functions 52

MITSUBISHI ELECTRIC CORPORATION

HEAD OFFICE : TOKYO BUILDING, 2-7-3 MARUNOUCHI, CHIYODA-KU, TOKYO 100-8310, JAPAN
NAGOYA WORKS : 1-14 , YADA-MINAMI 5-CHOME , HIGASHI-KU, NAGOYA , JAPAN

3.3 Screen design software specifications 63
3.3.1 Preparation before converting the project data 63
3.3.2 Procedure for the project data conversion 63
3.3.3 Screen design functions that are not supported 64
3.3.4 Other major changes 65
3.4 SoftGOT specifications 68

1. Requests for customers

We released the GOT2000 series with high functions and performance as an alternative of the GOT-A900 series in September 2013. We highly recommend that you replace the GOT-A900 series with the GOT2000 series for using new sophisticated features.
For the replacement models, refer to "Table 2-1 Recommended replacement GOT models of the GOT2000 series" in Chapter 2 below.

2. Replacement models

"Table 2-1 Recommended replacement GOT models of the GOT2000 series" introduces recommended models that have no or less restrictions in terms of the specifications on their replacement with the GOT2000 series. Other models can be selected depending on the usage status in your system. Select an appropriate model after carefully considering the range of performance in the current system.
For the precautions on the replacement, refer to each chapter and section.

2.1 GOT

When you replace the GOT-A900 series with the GOT2000 series, some GOTs require the change of the panel cutting dimensions. If you have difficulty to change the panel cutting dimensions, use the attachment.
When you use the GOT2000 series, the drawing software differs.

Table 2-1 Recommended replacement GOT models of the GOT2000 series

GOT-A900 series in use *1		Recommended GOT2000 series for replacement *5*7*8	Panel cut compatibility *12 ○ : Compatible △ : Not compatible (Attachment model)	Supported software GT Designer3 (GOT2000)
A985GOT-V	A985GOT-TBA-V	GT2712-STBA *9 GT2712-STWA *2*9	○	Ver.1.100E or later
	A985GOT-TBD-V	GT2712-STBD *9 GT2712-STWD *2*9	○	Ver.1.100E or later
A985GOT	A985GOT-TBA	GT2712-STBA *6*9 GT2712-STWA *2*6*9	○	Ver.1.100E or later
		GT2512-STBA *10*13	○	Ver.1.122C or later
	A985GOT-TBD	GT2712-STBD *6*9 GT2712-STWD *2*6*9	○	Ver.1.100E or later
		GT2512-STBD *10*13	○	Ver.1.122C or later
	A985GOT-TBA-EU	GT2712-STBA *6*9 GT2712-STWA *2*6*9	○	Ver.1.100E or later
		GT2512-STBA *10	○	Ver.1.122C or later
A975GOT	A975GOT-TBA-B	GT2710-VTBA *9 GT2710-VTWA *2*9	○	Ver.1.100E or later
		GT2510-VTBA *10 GT2510-VTWA *2*10	○	Ver.1.112S or later
	A975GOT-TBD-B	GT2710-VTBD *9 GT2710-VTWD *2*9	○	Ver.1.100E or later
		GT2510-VTBD *10 GT2510-VTWD *2*10	○	Ver.1.112S or later
A975GOT	A975GOT-TBA-EU	GT2710-VTBA *9 GT2710-VTWA *2*9	○	Ver.1.100E or later
		GT2510-VTBA *10 GT2510-VTWA *2*10	○	Ver.1.112S or later
	A975GOT-TBA	GT2710-VTBA *9 GT2710-VTWA *2*9	○	Ver.1.100E or later
		GT2510-VTBA *10 GT2510-VTWA *2*10	○	Ver.1.112S or later
	A975GOT-TBD	GT2710-VTBD *9 GT2710-VTWD *2*9	○	Ver.1.100E or later
		GT2510-VTBD *10 GT2510-VTWD *2*10	○	Ver.1.112S or later

GOT-A900 series in use *1		Recommended GOT2000 series for replacement *5*7*8	Panel cut compatibility *12 ○ : Compatible △ : Not compatible (Attachment model)	Supported software GT Designer3 (GOT2000)
A970GOT	A970GOT-TBA-B	GT2710-VTBA *9 GT2710-VTWA *2*9	○	Ver.1.100E or later
		GT2510-VTBA *10 GT2510-VTWA *2*10	○	Ver.1.112S or later
	A970GOT-TBD-B	GT2710-VTBD *9 GT2710-VTWD *2*9	○	Ver.1.100E or later
		GT2510-VTBD *10 GT2510-VTWD *2*10	○	Ver.1.112S or later
	A970GOT-TBA-EU	GT2710-VTBA *9 GT2710-VTWA *2*9	○	Ver.1.100E or later
		GT2510-VTBA *10 GT2510-VTWA *2*10	○	Ver.1.112S or later
	A970GOT-TBA	GT2710-VTBA *9 GT2710-VTWA *2*9	○	Ver.1.100E or later
		GT2510-VTBA *10 GT2510-VTWA *2*10	○	Ver.1.112S or later
	A970GOT-TBD	GT2710-VTBD *9 GT2710-VTWD *2*9	○	Ver.1.100E or later
		GT2510-VTBD *10 GT2510-VTWD *2*10	○	Ver.1.112S or later
	A970GOT-SBA	GT2710-VTBA *3*9 GT2710-VTWA *2*3*9	○	Ver.1.100E or later
		GT2510-VTBA *3*10 GT2510-VTWA *2*3*10	○	Ver.1.112S or later
	A970GOT-SBD	GT2710-VTBD *3*9 GT2710-VTWD *2*3*9	○	Ver.1.100E or later
		GT2510-VTBD *3*10 GT2510-VTWD *2*3*10	○	Ver.1.112S or later
	A970GOT-SBA-EU	GT2710-VTBA *3*9 GT2710-VTWA *2*3*9	○	Ver.1.100E or later
		GT2510-VTBA *3*10 GT2510-VTWA *2*3*10	○	Ver.1.112S or later
	A970GOT-LBA	GT2710-VTBA *3*9 GT2710-VTWA *2*3*9	○	Ver.1.100E or later
		GT2510-VTBA *3*10 GT2510-VTWA *2*3*10	○	Ver.1.112S or later
		GT2708-VTBA *3*9	△ (GT15-60ATT-97)	Ver.1.100E or later
		GT2508-VTBA *3*10 GT2508-VTWA *2*3*10	△ (GT15-60ATT-97)	Ver.1.112S or later
	A970GOT-LBD	GT2710-VTBD *3*9 GT2710-VTWD *2*3*9	○	Ver.1.100E or later
		GT2510-VTBD *3*10 GT2510-VTWD *2*3*10	○	Ver.1.112S or later
		GT2708-VTBD *3*9	△ (GT15-60ATT-97)	Ver.1.100E or later
		GT2508-VTBD *3*10 GT2508-VTWD *2*3*10	△ (GT15-60ATT-97)	Ver.1.112S or later
	A970GOT-LBA-EU	GT2710-VTBA *3*9 GT2710-VTWA *2*3*9	○	Ver.1.100E or later
		GT2510-VTBA *3*10 GT2510-VTWA *2*3*10	○	Ver.1.112S or later
		GT2708-VTBA *3*9	△ (GT15-60ATT-97)	Ver.1.100E or later
		GT2508-VTBA *3*10 GT2508-VTWA *2*3*10	△ (GT15-60ATT-97)	Ver.1.112S or later

GOT-A900 series in use *1		Recommended GOT2000 series for replacement *5*7*8	Panel cut compatibility *12 ○ : Compatible △ : Not compatible (Attachment model)	Supported software GT Designer3 (GOT2000)
A960GOT	A960GOT-EBA	GT2708-VTBA *3*9*11	△ (GT15-60ATT-96)	Ver.1.100E or later
		GT2508-VTBA *3*10*11 GT2508-VTWA *2*3*10*11	△ (GT15-60ATT-96)	Ver.1.112S or later
	A960GOT-EBD	GT2708-VTBD *3*9*11	△ (GT15-60ATT-96)	Ver.1.100E or later
		GT2508-VTBD *3*10*11 GT2508-VTWD *2*3*10*11	△ (GT15-60ATT-96)	Ver.1.112S or later
	A960GOT-EBA-EU	GT2708-VTBA *3*9*11	△ (GT15-60ATT-96)	Ver.1.100E or later
		GT2508-VTBA *3*10*11 GT2508-VTWA *2*3*10*11	△ (GT15-60ATT-96)	Ver.1.112S or later
A956WGOT	A956WGOT-TBD	GT2507-WTBD *3*10*21*22 GT2507-WTSD *3*10*20*21*22	× *22	Ver.1.175H or later
		GT2705-VTBD *9*19	△ (GT15-50ATT-95W)	Ver.1.130L or later
		GT2505-VTBD *10*19*23	△ (GT15-50ATT-95W)	Ver.1.180N or later
A956GOT	A956GOT-TBD-M3	GT2705-VTBD *9*14*18	○	Ver.1.130L or later
		GT2505-VTBD *10*18*23	○	Ver.1.180N or later
	A956GOT-TBD	GT2705-VTBD *9*14*18	○	Ver.1.130L or later
		GT2505-VTBD *10*18*23	○	Ver.1.180N or later
	A956GOT-SBD-M3-B	GT2705-VTBD *9*14*18	○	Ver.1.130L or later
		GT2505-VTBD *10*18*23	○	Ver.1.180N or later
	A956GOT-SBD-B	GT2705-VTBD *9*14*18	○	Ver.1.130L or later
		GT2505-VTBD *10*18*23	○	Ver.1.180N or later
	A956GOT-SBD-M3	GT2705-VTBD *9*14*18	○	Ver.1.130L or later
		GT2505-VTBD *10*18*23	○	Ver.1.180N or later
	A956GOT-SBD	GT2705-VTBD *9*14*18	○	Ver.1.130L or later
		GT2505-VTBD *10*18*23	○	Ver.1.180N or later
	A956GOT-LBD-M3	GT2705-VTBD *9*14*18	○	Ver.1.130L or later
		GT2505-VTBD *10*18*23	○	Ver.1.180N or later
	A956GOT-LBD	GT2705-VTBD *9*14*18	○	Ver.1.130L or later
		GT2505-VTBD *10*18*23	○	Ver.1.180N or later
A953GOT	A953GOT-TBD-M3	GT2705-VTBD *9*14*15*18	○	Ver.1.130L or later
		GT2505-VTBD *10*15*18	○	Ver.1.180N or later
	A953GOT-TBD	GT2705-VTBD *9*14*15*18	○	Ver.1.130L or later
		GT2505-VTBD *10*15*18	○	Ver.1.180N or later
	A953GOT-SBD-M3-B	GT2705-VTBD *9*14*15*18	○	Ver.1.130L or later
		GT2505-VTBD *10*15*18	○	Ver.1.180N or later
	A953GOT-SBD-B	GT2705-VTBD *9*14*15*18	○	Ver.1.130L or later
		GT2505-VTBD *10*15*18	○	Ver.1.180N or later
	A953GOT-SBD-M3	GT2705-VTBD *9*14*15*18	○	Ver.1.130L or later
		GT2505-VTBD *10*15*18	○	Ver.1.180N or later
	A953GOT-SBD	GT2705-VTBD *9*14*15*18	○	Ver.1.130L or later
		GT2505-VTBD *10*15*18	○	Ver.1.180N or later
	A953GOT-LBD-M3	GT2705-VTBD *9*14*15*18	○	Ver.1.130L or later
		GT2505-VTBD *10*15*18	○	Ver.1.180N or later
	A953GOT-LBD	GT2705-VTBD *9*14*15*18	○	Ver.1.130L or later
		GT2505-VTBD *10*15*18	○	Ver.1.180N or later

GOT-A900 series in use *1		Recommended GOT2000 series for replacement *5*7*8	Panel cut compatibility *12 ○ : Compatible △ : Not compatible (Attachment model)	Supported software GT Designer3 (GOT2000)
A951GOT	A951GOT-QTBD-M3	GT2705-VTBD *9*14*16*18	○	Ver.1.130L or later
	A951GOT-QTBD	GT2705-VTBD *9*14*16*18	○	Ver.1.130L or later
	A951GOT-QSBD-M3-B	GT2705-VTBD *9*14*16*18	○	Ver.1.130L or later
	A951GOT-QSBD-B	GT2705-VTBD *9*14*16*18	○	Ver.1.130L or later
	A951GOT-QSBD-M3	GT2705-VTBD *9*14*16*18	○	Ver.1.130L or later
	A951GOT-QSBD	GT2705-VTBD *9*14*16*18	○	Ver.1.130L or later
	A951GOT-QLBD-M3	GT2705-VTBD *9*14*16*18	○	Ver.1.130L or later
	A951GOT-QLBD	GT2705-VTBD *9*14*16*18	○	Ver.1.130L or later
	A951GOT-TBD-M3	GT2705-VTBD *4*9*14*18	○	Ver.1.130L or later
	A951GOT-TBD	GT2705-VTBD *4*9*14*18	○	Ver.1.130L or later
	A951GOT-SBD-M3-B	GT2705-VTBD *4*9*14*18	○	Ver.1.130L or later
	A951GOT-SBD-B	GT2705-VTBD *4*9*14*18	○	Ver.1.130L or later
	A951GOT-SBD-M3	GT2705-VTBD *4*9*14*18	○	Ver.1.130L or later
	A951GOT-SBD	GT2705-VTBD *4*9*14*18	○	Ver.1.130L or later
	A951GOT-LBD-M3	GT2705-VTBD *4*9*14*18	○	Ver.1.130L or later
	A951GOT-LBD	GT2705-VTBD *4*9*14*18	○	Ver.1.130L or later
A950GOT	A950GOT-TBD-M3	GT2705-VTBD *9*14*17*18	○	Ver.1.130L or later
		GT2505-VTBD *10*17*18	○	Ver.1.180N or later
	A950GOT-TBD	GT2705-VTBD *9*14*17*18	○	Ver.1.130L or later
		GT2505-VTBD *10*17*18	○	Ver.1.180N or later
A950GOT	A950GOT-SBD-M3-B	GT2705-VTBD *9*14*17*18	○	Ver.1.130L or later
		GT2505-VTBD *10*17*18	○	Ver.1.180N or later
	A950GOT-SBD-B	GT2705-VTBD *9*14*17*18	○	Ver.1.130L or later
		GT2505-VTBD *10*17*18	○	Ver.1.180N or later
	A950GOT-SBD-M3	GT2705-VTBD *9*14*17*18	○	Ver.1.130L or later
		GT2505-VTBD *10*17*18	○	Ver.1.180N or later
	A950GOT-SBD	GT2705-VTBD *9*14*17*18	○	Ver.1.130L or later
		GT2505-VTBD *10*17*18	○	Ver.1.180N or later
	A950GOT-LBD-M3	GT2705-VTBD *9*14*17*18	○	Ver.1.130L or later
		GT2505-VTBD *10*17*18	○	Ver.1.180N or later
	A950GOT-LBD	GT2705-VTBD *9*14*17*18	○	Ver.1.130L or later
		GT2505-VTBD *10*17*18	○	Ver.1.180N or later

*1 Production of all the GOT-A900 series models was discontinued.

*2 This model has a white front panel. For the difference in the specifications between the white-panel model and standard model (black panel), refer to Section 3.1.1 (3).

*3 The display color is replaced with 65536 colors since the GOT2000 series does not support 256, 16, 8, 2 (black/yellow orange), and 2 (monochrome) colors. Note that the price range differs. For the details, refer to the GOT2000 series catalog (L(NA)08274ENG).

*4 Change the connection method because the replacement model for the A bus connection is not provided. Select the model according to the connection method that is available for replacement.

*5 GT2505-VTBD is not compatible with sound output function. For the GOT2000 series excluding GT2507-WTBD and GT2507-WTSD, the sound output function is optional. When using the sound output function on the GOT-A900 series, use the sound output unit (GT15-SOUT) of the GOT2000 series separately.

*6 The RGB output function is an option for the GOT2000 series. When using the RGB output function of the GOT-A900 series, use the RGB output unit (GT27-ROUT) of the GOT2000 series separately.

*7 To use the printer function with the GOT2000 series, two methods are provided.
When using a serial printer, use the built-in RS-232 interface.
When using a PictBridge-compatible printer, prepare the printer unit (GT15-PRN).
(The printer unit cannot be installed on GT2505.)

*8 The GOT2000 series has no RUN/OUTPUT terminal in the power supply section.
When using the RUN/OUTPUT terminal in the power supply section of the GOT-A900 series, consider using the RUN output of the external I/O unit (GT15-DIO or GT15-DIOR). For the details of the external I/O unit, refer to the following.
• GT15 External I/O Unit (Positive Common Input/Sink Type Output) User's Manual (IB-0800382) (GT15-DIO)
• GT15 External I/O Unit (Negative Common Input/Source Type Output) User's Manual (IB-0800425) (GT15-DIOR)
(The external I/O unit cannot be installed on GT2505.)

*9 The display section of the GT27 is an analog-resistive type touch panel that accepts 2-point press. However, note that there are precautions on the arrangement of 2-point press switches. For the details, refer to Section 3.1.6.
*10 The display section of the GT25 is an analog-resistive type touch panel. When you touch two points or more simultaneously on the display section, any touch switch located around the center of the touched points may operate. Do not touch two or more points on the display section simultaneously.
*11 The resolution after replacement is changed (from 640 × 400 dots to 640 × 480 dots).
*12 The panel cutting dimensions are compatible; however, the external dimensions are longer up or down by 2 mm. (By 1.5 mm for GT2705/GT2505)
*13 When using the RGB output function, select GT2712. GT2512 does not support this function. GT2512 is not supported.
*14 The external dimensions are longer right or left by 1.5 mm.
*15 For replacement, communicate with the RS-232 interface of the GOT or use the RS-232 serial communication unit (GT15-RS2-9P). (GT2505 has only the built-in interface.)
*16 For replacement, use the Q bus connection unit (GT15-QBUS(2) or GT15-75QBUS(2)L).
*17 As GT2705-VTBD and GT2505-VTBD have a 9-pin connector, replace the cable in use (AC□R4-25P or others) with a GOT2000 series cable accordingly.
*18 The resolution after replacement is changed (from 320 × 240 dots to 640 × 480 dots).
*19 The resolution after replacement is changed (from 480 × 234 dots to 640 × 480 dots).
*20 This model has a silver front panel.
*21 The resolution after replacement is changed (from 480 × 234 dots to 800 × 480 dots).
*22 There is no attachment.
*23 For GT2505-VTBD, a communication unit or option unit is not usable.
To use a communication unit or option unit, consider replacing the GOT with the GT2705-VTBD.

2.2 Communication

2.2.1 A bus connection

No order for all the models of the A bus connection unit for the GOT2000 series was accepted in and after December 31, 2014, and the production was discontinued in January 31, 2015. When the GOT-A900 series is connected by the A bus connection, the connection type must be changed or the PLC must be replaced.

To replace the PLC, refer to the following Technical Bulletin.

➟ Production discontinuation of MELSEC-AnS/QnAS (small type) series and MELSEC-I/OLINK (FA-A-0142)
Production discontinuation of MELSEC-A/QnA (large type) series (T99-0050)

To change the A bus connection to another connection type, refer to the following.

➟ ■1. Settings of the GOT and PLC
■2. Connection type

■1. Settings of the GOT and PLC

When changing the connection type, check the settings of the PLC and GOT.

(1) PLC

When the GOT connected by the bus connection is removed or a communication unit is added to the PLC, the PLC may require new settings. According to the PLC configuration, check the parameter setting (including I/O assignment) and I/O numbers in the sequence program.

(2) GOT
Change the controller setting. *1
When changing the connection type to the network connection (excluding the Ethernet connection), set the network number and station number in the device number of each object. *2

*1 Example of the controller setting
For the direct CPU connection (serial) to the MELSEC-A series

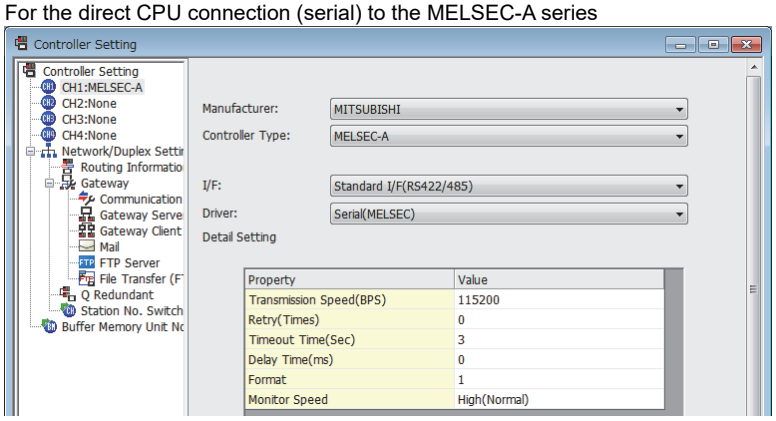

*2 Setting of the network number and station number
To monitor D0 of the CPU in the network number 1 and station number 2

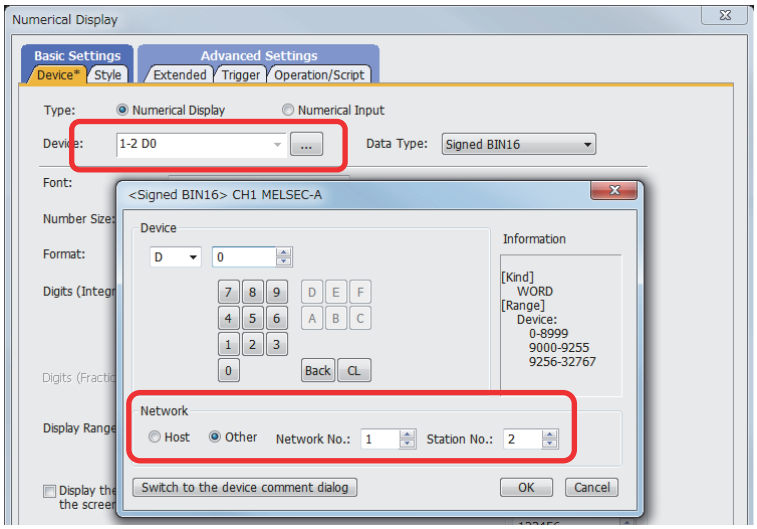

■2.Connection type

(1) Changing the connection type to the serial connection

(a) Direct CPU connection (serial)
Connect the GOT in the following configuration.

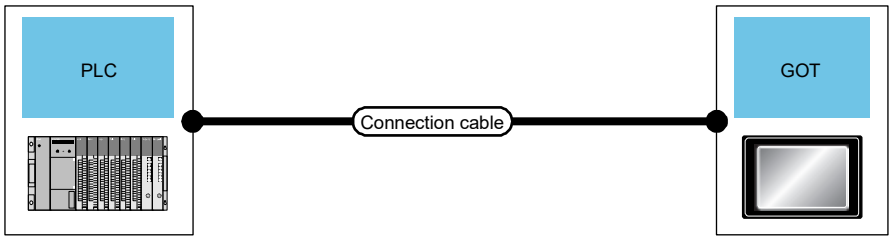

1) When connecting the GOT with MELSEC-A (ACPU, AnCPU, AnSCPU) or MELSEC-QnA (QnACPU, QnASCPU)

PLC		Cable model *1	GOT	
Model name	**Communication type**		**Option device**	**Model**
MELSEC-A (ACPU) MELSEC-A (AnCPU) MELSEC-A (AnSCPU) MELSEC-Q (QnACPU) MELSEC-Q (QnASCPU)	RS-422	GT01-C30R4-25P(3m) GT01-C100R4-25P(10m) GT01-C200R4-25P(20m) GT01-C300R4-25P(30m)	GT15-RS4-9S	GT27, GT25
			(Built into GOT)	

*1 If the connection distance exceeds 30m, consider changing the connection type to the network connection.

(b) Computer Link Connection
Connect the GOT in the following configuration.
Changing the connection type to the computer link connection requires a computer link module on the PLC side.

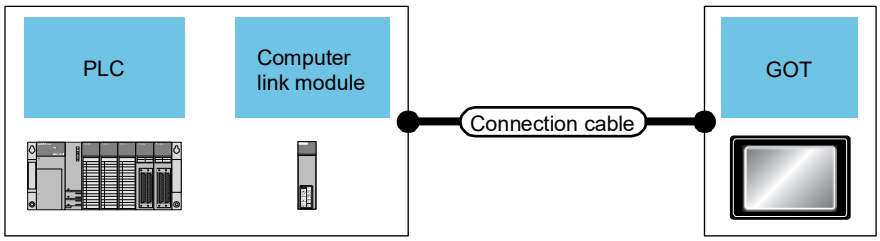

1) When connecting the GOT with MELSEC-A (ACPU, AnCPU)

PLC		Cable model *1*2	GOT	
Computer link module	**Communication type**		**Option device**	**Model**
AJ71UC24 *3	RS-232	GT09-C30R2-25P (3m) Cables prepared by the user (max.: 15m)	(Built into GOT) GT15-RS2-9P	GT27, GT25
	RS-422	GT09-C30R4-6C (3m) GT09-C100R4-6C (10m) GT09-C200R4-6C (20m) GT09-C300R4-6C (30m) Cables prepared by the user (max.: 500m)	(Built into GOT) GT15-RS4-9S	GT27, GT25

*1 For cables prepared by the user, refer to the following.
➡ GOT2000 Series Connection Manual (Mitsubishi Electric Products) For GT Works3 Version1
*2 If the connection distance exceeds 30m, consider changing the connection type to the connection using a cable prepared by the user or the network connection.
*3 Production of this module has been discontinued.

2) When connecting the GOT with MELSEC-A (AnSCPU, A0J2HCPU, A2CCPU)

PLC		Cable model *1*2	GOT	
Computer link module	**Communication type**		**Option device**	**Model**
A1SJ71UC24-R2 *3 A1SJ71C24-R2 *3 A1SJ71UC24-PRF *3 A1SJ71C24-PRF *3	RS-232	GT09-C30R2-9P (3m) Cables prepared by the user (max.: 15m)	(Built into GOT) GT15-RS2-9P	GT27, GT25
A1SJ71UC24-R4 *3 A1SJ71C24-R4 *3	RS-422	GT09-C30R4-6C (3m) GT09-C100R4-6C (10m) GT09-C200R4-6C (20m) GT09-C300R4-6C (30m) Cables prepared by the user (max.: 500m)	(Built into GOT) GT15-RS4-9S	GT27, GT25

*1 For cables prepared by the user, refer to the following.
➡ GOT2000 Series Connection Manual (Mitsubishi Electric Products) For GT Works3 Version1
*2 If the connection distance exceeds 30m, consider changing the connection type to the connection using a cable prepared by the user or the network connection.
*3 Production of this module has been discontinued.

3) When connecting the GOT with MELSEC-QnA (QnACPU)

PLC		Cable model *1*2	GOT	
Serial communication /Computer link module	**Communication type**		**Option device**	**Model**
AJ71QC24 *4 AJ71QC24N *4 AJ71QC24-R2 *4 AJ71QC24N-R2 *4	RS-232	GT09-C30R2-25P (3m) Cables prepared by the user (max.: 15m)	(Built into GOT) GT15-RS2-9P	GT27, GT25
AJ71QC24-R4 *4 AJ71QC24N-R4 *4	RS-422	GT01-C30R4-25P (3m) GT01-C100R4-25P (1m) GT01-C200R4-25P (20m) GT01-C300R4-25P (30m)	(Built into GOT) GT15-RS4-9S	GT27, GT25
AJ71QC24 *4 AJ71QC24N *4 AJ71QC24-R4 *4 AJ71QC24N-R4 *4	RS-422	GT09-C30R4-6C (3m) GT09-C100R4-6C (10m) GT09-C200R4-6C (20m) GT09-C300R4-6C (30m) Cables prepared by the user (max.: 1200m)	(Built into GOT) GT15-RS4-9S	GT27, GT25
AJ71UC24 *3*4	RS-232	GT09-C30R2-25P (3m) Cables prepared by the user (max.: 15m)	(Built into GOT) GT15-RS2-9P	GT27, GT25
AJ71UC24 *3*4	RS-422	GT09-C30R4-6C (3m) GT09-C100R4-6C (10m) GT09-C200R4-6C (20m) GT09-C300R4-6C (30m) Cables prepared by the user (max.: 500m)	(Built into GOT) GT15-RS4-9S	GT27, GT25

*1 For cables prepared by the user, refer to the following.
➡ GOT2000 Series Connection Manual (Mitsubishi Electric Products) For GT Works3 Version1

*2 If the connection distance exceeds 30m, consider changing the connection type to the connection using a cable prepared by the user or the network connection.

*3 The usable device numbers correspond to the device range of AnACPU.

*4 Production of this module has been discontinued.

4) When connecting the GOT with MELSEC-QnA (QnASCPU)

PLC		Cable model *1*2	GOT	
Serial communication /Computer link module	**Communication type**		**Option device**	**Model**
A1SJ71QC24 *4 A1SJ71QC24N *4 A1SJ71QC24N1 *4 A1SJ71QC24-R2 *4 A1SJ71QC24N-R2 *4 A1SJ71QC24N1-R2 *4	RS-232	GT09-C30R2-9P (3m) Cables prepared by the user (max.: 15m)	(Built into GOT)	GT27, GT25
			GT15-RS2-9P	
A1SJ71QC24 *4 A1SJ71QC24N *4 A1SJ71QC24N1 *4	RS-422	GT09-C30R4-6C (3m) GT09-C100R4-6C (10m) GT09-C200R4-6C (20m) GT09-C300R4-6C (30m) Cables prepared by the user (max.: 1200m)	(Built into GOT)	GT27, GT25
			GT15-RS4-9S	
A1SJ71UC24-R2 *3*4 A1SJ71C24-R2 *3*4 A1SJ71UC24-PRF *3*4 A1SJ71C24-PRF *3*4	RS-232	GT09-C30R2-9P (3m) Cables prepared by the user (max.: 15m)	(Built into GOT)	GT27, GT25
			GT15-RS2-9P	
A1SJ71UC24-R4 *3*4 A1SJ71C24-R4 *3*4	RS-422	GT09-C30R4-6C (3m) GT09-C100R4-6C (10m) GT09-C200R4-6C (20m) GT09-C300R4-6C (30m) Cables prepared by the user (max.: 500m)	(Built into GOT)	GT27, GT25
			GT15-RS4-9S	

*1 For cables prepared by the user, refer to the following.
➡ GOT2000 Series Connection Manual (Mitsubishi Electric Products) For GT Works3 Version1

*2 If the connection distance exceeds 30m, consider changing the connection type to the connection using a cable prepared by the user or the network connection.

*3 The usable device numbers correspond to the device range of AnACPU.

*4 Production of this module has been discontinued.

(2) Changing the connection type to the network connection

(a) MELSECNET/10 Connection
Connect the GOT in the following configuration.
Changing the connection type to the MELSECNET/10 connection requires a MELSECNET/10 network module on the PLC side.
The GOT side requires a MELSECNET/H communication unit (used in the MELSECNET/10 mode).

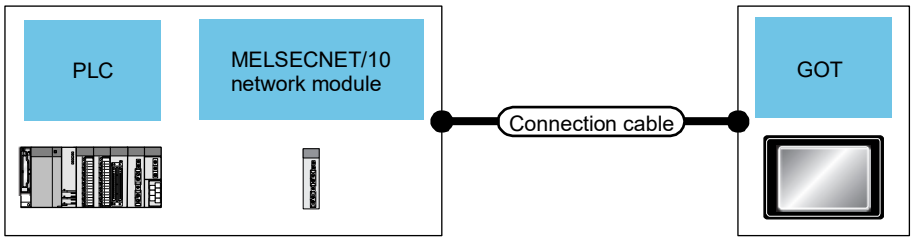

1) When connecting the GOT with MELSEC-A (AnCPU *1, AnSCPU *1) (optical loop system)

PLC		Cable model	GOT	
MELSECNET/H network module	**Communication type**		**Option device**	**Model**
AJ71LP21 *3 A1SJ71LP21	MELSECNET/10	Optical fiber cable	GT15-J71LP23-25 *2	GT27, GT25

*1 The following PLCs can be connected: A2UCPU, A2UCPU-S1, A3UCPU, A4UCPU, A2USCPU, A2USCPU-S1, and A2USHCPU-S1.
*2 Set the MELSECNET/10 mode in the controller setting.
*3 Production of this module has been discontinued.

2) When connecting the GOT with MELSEC-QnA (QnACPU, QnASCPU) (optical loop system)

PLC		Cable model	GOT	
MELSECNET/H network module	**Communication type**		**Option device**	**Model**
AJ71QLP21 *2 AJ71QLP21S *2 A1SJ71QLP21 A1SJ71QLP21S *2	MELSECNET/10	Optical fiber cable	GT15-J71LP23-25 *1	GT27, GT25

*1 Set the MELSECNET/10 mode in the controller setting.
*2 Production of this module has been discontinued.

3) When connecting the GOT with MELSEC-A (AnCPU *1, AnSCPU *1) (coaxial bus system)

PLC		Cable model	GOT	
MELSECNET/H network module	**Communication type**		**Option device**	**Model**
AJ71BR11 *3 A1SJ71BR11	MELSECNET/10	coaxial cable	GT15-J71BR13 *2	GT27, GT25

*1 The following PLCs can be connected: A2UCPU, A2UCPU-S1, A3UCPU, A4UCPU, A2USCPU, A2USCPU-S1, and A2USHCPU-S1.
*2 Set the MELSECNET/10 mode in the controller setting.
*3 Production of this module has been discontinued.

4) When connecting the GOT with MELSEC-QnA (QnACPU, QnASCPU) (coaxial bus system)

PLC		Cable model	GOT	
MELSECNET/H network module	Communication type		Option device	Model
AJ71QBR11 *2 A1SJ71QBR11	MELSECNET/10	coaxial cable	GT15-J71BR13 *1	GT27, GT25

*1 Set the MELSECNET/10 mode in the controller setting.
*2 Production of this module has been discontinued.

(b) CC-Link Connection (Intelligent Device Station)
Connect the GOT in the following configuration.
Changing the connection type to the CC-Link (intelligent device station) connection requires a CC-Link module on the PLC side.

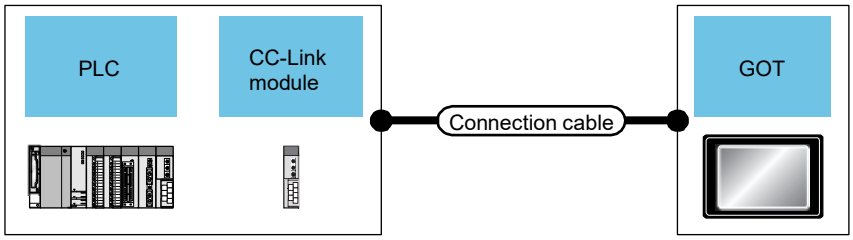

1) When connecting the GOT with MELSEC-A (ACPU *1, AnCPU, AnSCPU)

PLC		Cable model	GOT	
CC-Link module	Communication type		Option device	Model
AJ61BT11 *3 A1SJ61BT11	CC-Link (Ver.1)	CC-Link dedicated cable	GT15-J61BT13 *2	GT27, GT25

*1 Only A0J2HCPU, A0J2HCPUP21, A0J2HCPUR21, and A0J2HCPU-DC24 can be connected.
*2 Specify Ver.1 as the mode setting in the Communication Settings to use it.
*3 Production of this module has been discontinued.

2) When connecting the GOT with MELSEC-QnA (QnACPU, QnASCPU)

PLC		Cable model	GOT	
CC-Link module	Communication type		Option device	Model
AJ61QBT11 *2 A1SJ61QBT11	CC-Link (Ver.1)	CC-Link dedicated cable	GT15-J61BT13 *1	GT27, GT25

*1 Specify Ver.1 as the mode setting in the Communication Settings to use it.
*2 Production of this module has been discontinued.

(c) Ethernet Connection
Connect the GOT in the following configuration.
Changing the connection type to the Ethernet connection requires an Ethernet module on the PLC side.

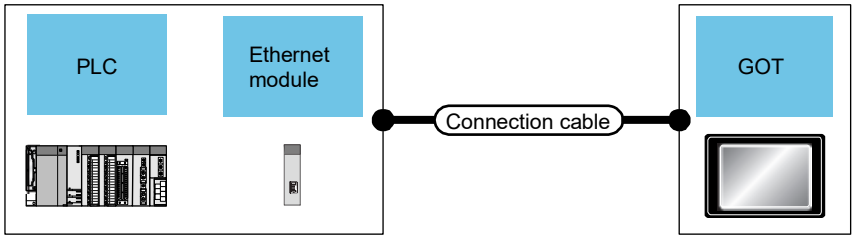

1) When connecting the GOT with MELSEC-A (AnCPU, AnSCPU)

PLC		Cable model	GOT	
Ethernet module	**Communication type**		**Option device**	**Model**
AJ71E71N3-T *1 AJ71E71N-B5 *1 AJ71E71N-B2 *1 AJ71E71N-T *1 AJ71E71N-B5T *1 AJ71E71-S3 *1 A1SJ71E71N3-T *1 A1SJ71E71N-B5 *1 A1SJ71E71N-B2 *1 A1SJ71E71N-T *1 A1SJ71E71N-B5T *1 A1SJ71E71-B5-S3 *1 A1SJ71E71-B2-S3 *1	Ethernet	Twisted pair cable • 10BASE-T • 100BASE-TX	(Built into GOT)	GT27, GT25

*1 Production of this module has been discontinued.

2) When connecting the GOT with MELSEC-QnA (QnACPU, QnASCPU)

PLC		Cable model	GOT	
Ethernet module	**Communication type**		**Option device**	**Model**
AJ71QE71N3-T *1 AJ71QE71N-B5 *1 AJ71QE71N-B2 *1 AJ71QE71N-T *1 AJ71QE71N-B5T *1 AJ71QE71 *1 AJ71QE71-B5 *1 A1SJ71QE71N3-T *1 A1SJ71QE71N-B5 *1 A1SJ71QE71N-B2 *1 A1SJ71QE71N-T *1 A1SJ71QE71N-B5T *1 A1SJ71QE71-B5 *1 A1SJ71QE71-B2 *1	Ethernet	Twisted pair cable • 10BASE-T • 100BASE-TX	(Built into GOT)	GT27, GT25

*1 Production of this module has been discontinued.

(3) Changing the connection type when multiple GOTs are connected
Consider the following connection types for the configuration in which the multiple GOTs are connected.
• Network Connection
➟ 2.2.1 ■2 (2) Changing the connection type to the network connection
• Multi-Drop Connection
➟ (a) Multi-Drop Connection

(a) Multi-Drop Connection *1
Connect the GOT in the following configuration.
Changing the connection type to the multi-drop connection requires the following option devices and cables.

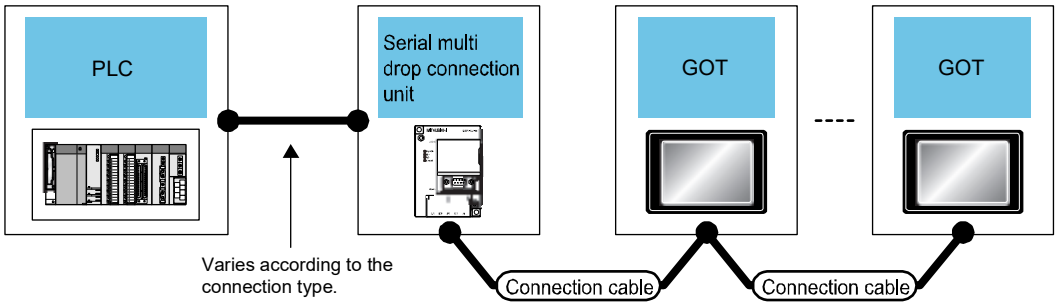

*1 When the number of connected slave GOTs and the device points of each GOT increase, the device update cycle on the screen may get slower. In such a case, it is recommended to reduce the device points of each GOT. (Please consider 250 points as a guide of 1 GOT, and 750 points as a guide of the total points.) In addition, when a timeout error occurs, make the timeout time longer in the communication settings of the slave GOT.

1) When connecting the GOT with MELSEC-A (ACPU, AnCPU, AnSCPU)*1 or MELSEC-QnA (QnACPU *2, QnASCPU)
For the system configuration between the serial multi-drop connection unit and PLC, refer to the items about each connection type.

Multi-Drop Connection Unit		Cable model *3	GOT	
Serial Multi-Drop Connection Unit	Communication type		Option device	Model
GT01-RS4-M	RS-485	User-created cable (500 m max. *4)	(Built into GOT)	GT27, GT25
			GT15-RS4-9S	
			GT15-RS4-TE	

*1 These PLCs cannot be connected to the serial multi-drop connection unit in the computer link connection.
*2 Q4ARCPU cannot be connected.
*3 For cables prepared by the user, refer to the following.
➟ GOT2000 Series Connection Manual (Mitsubishi Electric Products) For GT Works3 Version1
*4 The maximum distance from the PLC to the terminal GOT.

2.3 Communication unit

Most of the communication units of the GOT2000 series can be used together with the GOT2000 series as-is. Check the availability of use in the following table.

Table 2-2 List of replacement models for communication units

Communication format	Unit model for GOT-A900 *1	Unit model for GOT2000	Remarks
Q bus connection	A9GT-QBUSS A9GT-50WQBUSS	GT15-QBUS GT15-75QBUSL *3	-
	A9GT-QBUS2S	GT15-QBUS2 GT15-75QBUS2L *3	-
A bus connection	A9GT-BUSS A9GT-BUSSU A9GT-50WBUSS	GT15-ABUS *4 GT15-75ABUSL *3*4	-
	A9GT-BUS2S A9GT-BUS2SU	GT15-ABUS2 *4 GT15-75ABUS2L *3*4	-
RS-232 connection	A9GT-RS2 A9GT-RS2T A9GT-50WRS2	GOT built-in interface (RS-232)	-
		GT15-RS2-9P	-
RS-422 connection	A9GT-RS4 A9GT-50WRS4	GOT built-in interface (RS-422)	9-pin connector type
		GT15-RS4-9S	9-pin connector type
		GT15-RS4-TE	This model can be used only when the GOT is connected to the temperature controller or indicating controller by RS-485 or in the GOT multi-drop connection.
MELSECNET/10 connection	A9GT-QJ71LP23 *2	GT15-J71LP23-25	Use the MELSECNET/H communication unit with the MELSECNET/10 mode.
	A9GT-QJ71BR13 *2	GT15-J71BR13	Use the MELSECNET/H communication unit with the MELSECNET/10 mode.
MELSECNET(II) connection	A7GT-J71AP23 *2	Not available	The network system must be changed to the MELSECNET/H network system. The distance between stations is restricted.
	A7GT-J71AR23 *2	Not available	The network system must be changed to the MELSECNET/H network system. The distance between stations is restricted.
MELSECNET/B connection	A7GT-J71AT23B *2	Not available	The network system must be changed to the MELSECNET/H network system.
CC-Link connection	A8GT-J61BT13 *2 A8GT-J61BT15 *2	GT15-J61BT13	For replacing A8GT-J61BT15, change the sequence programs (deleting ladder programs) and the screen settings.
Ethernet connection	A9GT-J71E71-T	GOT built-in interface (Ethernet) *5	-

*1 Production of all the GOT-A900 series models was discontinued.

*2 The GOT-A900 series communication unit has setting switches, including rotary switches. Though the GOT2000 series communication unit does not have rotary switches and others, setting switches is required with software. Therefore, set the switches with the drawing software or the utility. For details, refer to Section 2.3.1.

*3 The slim model has limitation for combination with other units.
To use the slim model together with the units that have the external I/O function, the sound output function, the printer function, the video/RGB I/O function, or others, use the following units.
- GT15-QBUS (Q bus connection 1ch)
- GT15-QBUS2 (Q bus connection 2ch)
- GT15-ABUS (A bus connection 1ch)
- GT15-ABUS2 (A bus connection 2ch)

*4 No further orders will be accepted in and after January 2015, and the production will be discontinued in and after February 2015.

*5 A9GT-J71E71-T supports 10Mbps (10BASE-T) only. However, the interface built in the GOT2000 series supports 100Mbps (100BASE-TX), in addition to 10Mbps (10BASE-T).

2.3.1 Units that require new setting method

The communication units for the GOT-A900 series listed below require settings with rotary switches and others on the hardware. However, the communication units for the GOT2000 series do not have rotary switches and others, and settings with the drawing software or the utility are required. For GOT2000 series, refer to the following table.

Table 2-3 Units that require new setting method and new setting method after change

GOT-A900 series communication module			GOT2000 series communication unit	
Item	**Model**	**Settings on hardware**	**Model**	**Setting method**
CC-Link communication module	A8GT-J61BT13 A8GT-J61BT15	(1) Mode setting switch: (A8GT-J61BT13 only) Online/Offline (2) Station number setting switch: tens place, ones place (3) Transmission baudrate setting switch (4) Condition setting switch: Input data status of data link faulty station (A8GT-J61BT13 only), number of occupied stations	GT15-J61BT13	Set with the drawing software (GT Designer3 (GOT2000)) or utility of the GOT.
MELSECNET/10 connection	A9GT-QJ71LP23	(1) Mode setting switch: Online/Offline (2) Station number setting switch: tens place, ones place (3) Transmission Group number setting switch (4) Network number setting switch: hundreds place, tens place, ones place	GT15-J71LP23-25	Set with the drawing software (GT Designer3 (GOT2000)) or utility of the GOT.
	A9GT-QJ71BR13		GT15-J71BR13	

2.3.2 Communication units and options without replaceable models

The communication units and options for the GOT-A900 series listed below do not have alternative models to be compatible with the GOT2000 series.
Consider the following alternative plans.

Table 2-4 Communication modules and options without replaceable models and alternative plans

Category	Item	Model	Alternative plan
Communication module	Data link unit for MELSECNET (II) network system	A7GT-J71AP23	Replacing with the MELSECNET/H network system (GOT2000 series communication unit model: GT15-J71BR13/GT15-J71LP23-25) is recommended. (Section 4.4)
		A7GT-J71AR23	
	Data link unit for MELSECNET/B network system	A7GT-J71AT23B	
	CC-Link communication module (remote device station)	A8GT-J61BT15	Replacing with the CC-Link (intelligent device station) communication unit (GOT2000 series communication unit model: GT15-J61BT13) is recommended. *1

*1
- Maximum number of connected units is reduced from 32 to 26. When connecting more than 26 units, consider adding a master station to support the system.
- Remote dedicated commands (initial setting command, continuous read command, random read command, continuous write command, random write command, monitor register command, monitor request command, always write register command, and always write register command) are not supported. Please consult Mitsubishi Electric representative for questions regarding to the remote dedicated command.

2.3.3 Precautions for replacement of communication units

(1) Replacing the GOT-A900 series connected to the MELSECNET/10 (programmable controller to programmable controller optical loop/coaxial bus)) network system with the GOT2000 series

Use the MELSECNET/H communication unit listed in Section 2.3, set the MELSECNET/H communication unit to the MELSECNET/10 mode, and connect the GOT to the MELSECNET/10 network system.

* For the details, refer to "GOT2000 Series Connection Manual (Mitsubishi Electric Product) For GT Works3 Version1 (SH-081197ENG)".

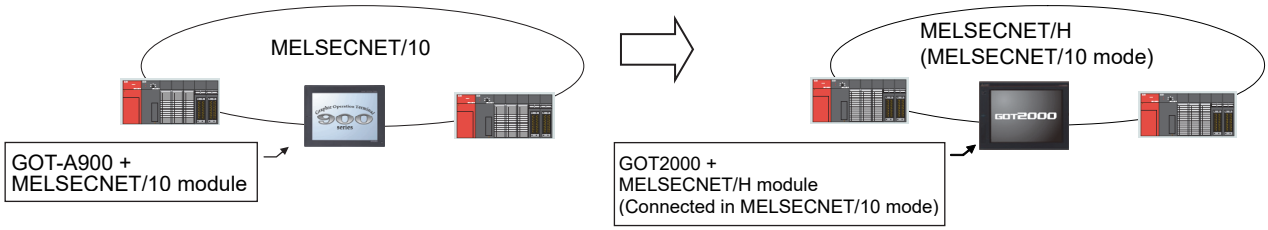

Figure 2-1 Replacement example that requires a change in the network system configuration

2.4 Option unit

The GOT-A900 series option units cannot be used with the GOT2000 series. For replacing the GOT-A900 series with the GOT2000 series, use the option units dedicated to the GOT2000 series.

Table 2-5 List of replacement models for option units

option format	Unit model for GOT-A900	Unit model for GOT2000	Remarks
Video/RGB interface unit	A9GT-80V4R1	GT27-V4R1-Z	To use the unit on GT2715 and to comply with the EMC Directive, use the unit whose hardware version is B or later. *1
	A9GT-80V4	GT27-V4-Z	
	A9GT-80R1	GT27-R2	
External I/O interface	A9GT-70KBF	GT15-DIO *2	The cable wiring must be changed because of the increase in the number of I/O points and the different interface pin configuration.
	A8GT-50KBF		
Numeric keypad panel	A8GT-TK	Applicable without replacement *3	
Printer interface	A9GT-50PRF (Parallel interface)	GT15-PRN	Supported by GT Designer3 (GOT2000) Ver.1.105K or later. The printer model must be changed because the GOT2000 series has a USB interface. *4
		GOT built-in interface (RS-232)	The printer model must be changed because the GOT2000 series has a RS-232 interface. *4
		GT15-RS2-9P	
PC card interface unit	A1SD59J-MIF	Not available	The GOT2000 series has the built-in SD card interface.

*1 To use the unit on GT2715, the hardware version of the supplied GT16M-V4R1-Z, GT16M-V4-Z, and GT27-IF1000 must also be B or later.

*2 Specifications of external power supply voltage, external connection connector shape and others are changed. For details, refer to the GT15 External I/O Unit (Positive Common Input/Sink Type Output) User's Manual (IB-0800382).

*3 The external I/O unit (GT15-DIO) and the external I/O unit connection conversion cable (GT15-C03HTB) are required. The GT15-DIOR cannot be used.

*4 Since the Centronics interface (AGT-50PRF) is replaced with the USB interface (GT15-PRN) or the RS-232 interface (GOT built-in interface or GT15-RS2-9P), change the printer model. For the validated printer models applicable to the GOT2000 series, refer to TECHNICAL BULLETIN GOT-A-0064 "List of Valid Devices Applicable for GOT2000 Series" on the Mitsubishi Electric Factory Automation Global Website.

2.4.1 Precautions for replacement of option units

When option units for the GOT-A900 series are replaced with those for the GOT2000 series, the height will be changed depending on the units used. Check the height in the following table.

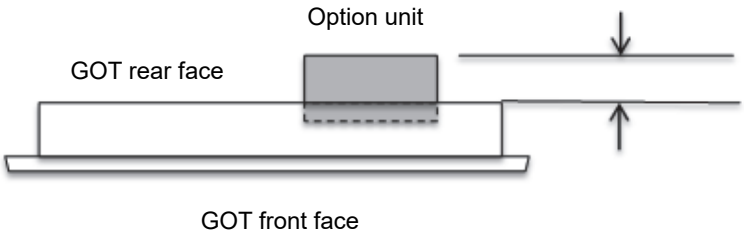

Table 2-6 List of the height of option units

Option unit	GT27□□	GT25□□	A985GOT-V	A985GOT	A975GOT	A970GOT	A960GOT
Video input unit (GT27-V4-Z)	44.5	-	43	-	-	-	-
RGB input unit (GT27-R2)	20	-	43	-	-	-	-
Video/RGB input unit (GT27-V4R1-Z)	44.5	-	43	-	-	-	-
External I/O unit (GT15-DIO, GT15-DIOR)	23	23	45.6	45.6	42.6	42.6	45.6
Printer unit (GT15-PRN)	23	23	-	-	-	-	-

Unit (mm)

2.5 Option

For options, use the products for the GOT2000 series. Some options can be used as is.
Check the availability of use in the following table.

Table 2-7 List for option replacement

Option unit	Availability of use	Remarks
Backlight	×	PRODUCTS FOR THE GOT-A900 SERIES CANNOT BE USED. * Since GT27 models and GT25 models adopt an LED backlight, the backlight cannot be replaced.
Protective sheet	×	PRODUCTS FOR THE GOT-A900 SERIES CANNOT BE USED. USE THE PRODUCT FOR THE GOT2000 SERIES.
Stand	×	PRODUCTS FOR THE GOT-A900 SERIES CANNOT BE USED. USE THE PRODUCT FOR THE GOT2000 SERIES.
Memory card (PC card)	×	CF cards must be replaced with SD cards. • L1MEM-2GBSD • L1MEM-4GBSD • NZ1MEM-2GBSD • NZ1MEM-4GBSD • NZ1MEM-8GBSD • NZ1MEM-16GBSD
Attachment	△	The attachment used for the GOT-A900 series cannot be used as-is for GT2708 and GT2508.

◎: Available as-is ×: Not available

* For the details and prices of option products for the GOT2000 series, refer to the GOT2000 series catalog (L(NA)08274ENG).

2.6 Cable

2.6.1 Q bus connection cable

(1) Utilization of cables in present use
The following shows the list for replacing the existing GOT-A900 series cables with the GOT2000 series cables.

Table 2-8 Replacement cables of the GOT2000 series

Existing GOT-A900 series cable				Replacement GOT2000 series cable		
Cable		**Cable model**	**Cable length**	**Cable model**	**Cable length**	**Remarks**
Q bus connection cable	Q extension cable GOT-to-GOT connection cable	QC06B	0.6m	QC06B + dedicated ferrite core (GT15-QFC) *1	0.6m	For connection between QCPU and GOT For connection between GOT and GOT
		QC12B	1.2m	QC12B + dedicated ferrite core (GT15-QFC) *1	1.2m	
		QC30B	3m	QC30B + dedicated ferrite core (GT15-QFC) *1	3m	
		QC50B	5m	QC50B + dedicated ferrite core (GT15-QFC) *1	5m	
		QC100B	10m	QC100B + dedicated ferrite core (GT15-QFC) *1	10m	
	Q long-distance connection cable GOT-to-GOT long-distance connection cable	A9GT-QC150BS	15m	A9GT-QC150BS + dedicated ferrite core (GT15-QFC) *1	15m	For connection between QCPU and GOT (A9GT-QCNB is required.) For connection between GOT and GOT
		A9GT-QC200BS	20m	A9GT-QC200BS + dedicated ferrite core (GT15-QFC) *1	20m	
		A9GT-QC250BS	25m	A9GT-QC250BS + dedicated ferrite core (GT15-QFC) *1	25m	
		A9GT-QC300BS	30m	A9GT-QC300BS + dedicated ferrite core (GT15-QFC) *1	30m	
		A9GT-QC350BS	35m	A9GT-QC350BS + dedicated ferrite core (GT15-QFC) *1	35m	
	Bus extension connector box	A9GT-QCNB	-	Applicable without replacement	-	For QCPU long-distance (13.2m or more) bus connection

*1 Purchase the ferrite cores from Mitsubishi Electric System & Service Co., Ltd.
(The GT15-QFC or the GT15-AFC includes two ferrite cores for a cable.)

(2) Replacing GOT when using multiple units of bus connection
When multiple GOT-A900 series are connected with the bus connection, one or more GOT-A900 series can be replaced with the GOT2000 series by replacing all the bus connection cables with the GOT2000 series cables or by attaching ferrite cores (listed in Section 2.6.1 (1)) to the GOT-A900 series cables. Therefore, the GOT-A900 series and the GOT2000 series can exist in the same system.

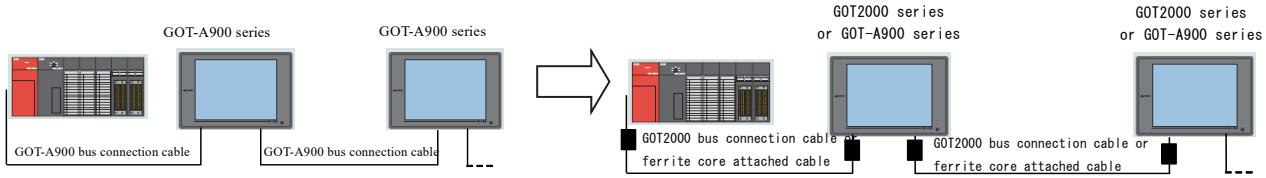

2.6.2 RS-232 cable

The following shows the list for replacing the existing GOT-A900 series cables with the GOT2000 series cables.

Table 2-9 Replacement cables of the GOT2000 series

Existing GOT-A900 series cable				Replacement GOT2000 series cable		
Cable		Cable model	Cable length	Cable model	Cable length	Remarks
RS-232 CABLE	CPU direct connection (serial) cable	QC30R2	3m	GT01-C30R2-6P	3m	For connection between QCPU and GOT
	QCPU direct connection cable * RS-232/422 conversion	AC30R4-25P +FA-CNV2402CBL	3m+0.2m	GT01-C30R4-25P+FA-CNV2402CBL	3m+0.2m	GOT
		AC30R4-25P +FA-CNV2405CBL	3m+0.5m	GT01-C30R4-25P+FA-CNV2405CBL	3m+0.5m	
		AC100R4-25P +FA-CNV2402CBL	10m+0.2m	GT01-C100R4-25P+FA-CNV2402CBL	10m+0.2m	
		AC100R4-25P +FA-CNV2405CBL	10m+0.5m	GT01-C100R4-25P+FA-CNV2405CBL	10m+0.5m	
		AC300R4-25P +FA-CNV2402CBL	30m+0.2m	GT01-C300R4-25P+FA-CNV2402CBL	30m+0.2m	
		AC300R4-25P +FA-CNV2405CBL	30m+0.5m	GT01-C300R4-25P+FA-CNV2405CBL	30m+0.5m	
	FX function extension board connection cable	AC30R2-9SS	3m	GT01-C30R2-9S	3m	For connection between FXCPU extension board (FX1N-232-BD) and GOT
		FX-232CAB-1	3m			

2.6.3 RS-422 cable

The following shows the list for replacing the existing GOT-A900 series cables with the GOT2000 series cables.

Table 2-10 Replacement cables of the GOT2000 series

Existing GOT-A900 series cable				Replacement GOT2000 series cable		
Cable		Cable model	Cable length	Cable model	Cable length	Remarks
RS-422 cable	QnA/A/FXCPU direct connection (serial) cable, Computer link cable, AJ65BT-G4 cable	AC30R4-25P	3m	GT01-C30R4-25P	3m	For connection between QnA/A/FX(FX1, FX2, FX2c) CPU and GOT, For connection between FA-CNV□ CBL and GOT, For connection between FX-2PIF and GOT, For connection between FX-422AW0 and GOT, For connection between serial communication module (AJ71QC24(N)-R4) and GOT, For connection between AJ65BT-G4-S3 and GOT
		AC100R4-25P	10m	GT01-C100R4-25P	10m	
		AC300R4-25P	30m	GT01-C300R4-25P	30m	
	FXCPU direct connection (serial) cable FX function extension board connection cable	FX9GT-CAB0-150	1.5m	GT01-C10R4-8P	1m	For connection between FXCPU (FX0, FX0S, FX0N, FX1S, FX1N, FX2N, FX2NC) and GOT For connection between FXCPU extension board (FX1N-422-BD, FX2N-422-BD) and GOT
		FX9GT-CAB0	3m	GT01-C30R4-8P	3m	
		FX9GT-CAB-10M	10m	GT01-C100R4-8P	10m	
		AC30R4-25P +FX-422AW0	3m+1.5m	GT01-C30R4-8P	3m	
		AC100R4-25P +FX-422AW0	10m+1.5m	GT01-C100R4-8P	10m	
		AC300R4-25P +FX-422AW0	30m+1.5m	GT01-C300R4-8P	30m	

2.6.4 Network cable (Ethernet, MELSECNET/10, and CC-Link)

The GOT-A900 series network cables are applicable to the GOT2000 series.

2.6.5 Other cables

The following shows the list for replacing the existing GOT-A900 series cables with the GOT2000 series cables.

Table 2-11 Treatment for other existing cables

Existing GOT-A900 series cable			Replacement GOT2000 series cable	
Cable	**Cable model**	**Cable length**	**Cable model**	**Cable length**
Printer cable	AC30PIO-20P	3m	For printer unit (GT15-PRN), GT09-C30USB-5P	3m
			For serial printer, cables prepared by user	-
CRT connection cable	AC50VG	5m	Applicable without replacement	-
	AC300VG	30m	Applicable without replacement	-
Video image display coaxial cable	cables prepared by user	-	Applicable without replacement	-
RGB 画面表示用 9 芯複合ケーブル	cables prepared by user	-	Applicable without replacement	-

2.7 Software

To create project data for the GOT2000 series, MELSOFT GT Designer3 (GOT2000), which is included with the screen design software MELSOFT GT Works3 (Version 1.100E or later), is needed.
For how to obtain the software in a specific version, refer to the following table.

Table 2-12 Supported software version and how to obtain the software

Software	Supported version	How to obtain the software
Screen design software MELSOFT GT Works3	■Japanese/English/Chinese version MELSOFT GT Designer3 (GOT2000), which is enclosed with MELSOFT GT Works3 Version 1.100E or later	The version shown on the left is supported. If your version is old, update the software to the latest version, 1.100E or later. For how to obtain the software, contact your local sales office.
Screen design software MELSOFT GT Works2 MELSOFT GT Designer2	Not supported	To create project data for the GOT2000 series, purchase MELSOFT GT Works3 Version 1.100E or later.
FA integrated engineering software MELSOFT iQ Works	■Japanese version Ver.1.71Z or later is supported. ■English version Ver.1.77F or later is supported.	The version shown on the left is supported. If your version is old, update the software to the latest version. For how to obtain the software, contact your local sales office.

* For the details of the project data conversion, refer to Section 3.3.

2.8 License

The GOT-A900 series licenses below cannot be used for the GOT2000 series. Please purchase the GOT2000 series licenses.

Table 2-13 List of replacement models for option units

License name (license key for GOT-A900)	Availability of use (license key for GOT2000)	Remarks
License key for GT SoftGOT2 (A9GTSOFT-LKEY-P, SW5D5F-SGLKEY-J)	× (GT27-SGTKEY-U)	Use the license for GT SoftGOT2000.

×: Model change required

3. Comparison in specifications

The following describes the differences in the specifications between the GOT-A900 series and GOT2000 series. When considering a replacement of the GOT-A900 series with the GOT2000 series, check the specifications of your current model and target model.

3.1 Hardware specifications

3.1.1 Comparison in hardware specifications

The following describes the comparison in the hardware specifications between the GOT-A900 series and GOT2000 series.

(1) Lineup

Table 3-1 Lineup comparison

Item		GOT-A900	GOT2000				
			GT27 standard	GT27 white	GT25 standard	GT25 white	GT25 Wide
Front face color		Black	Black	White	Black	White	黒／銀
LCD size	15" XGA	-	◎	-	-	-	-
	12.1" SVGA (12" SVGA)	◎	◎	◎	◎	-	-
	10.4" SVGA	-	◎	-	-	-	-
	10.4" VGA (10" VGA)	◎	◎	◎	◎	◎	-
	10.1" WXGA	-	-	-	-	-	◎
	8.4" SVGA	-	◎	-	◎	◎	-
	8.4" VGA	◎	◎	-	-	-	-
	9" 640 × 400 dots	◎	-	-	-	-	-
	7" 480 × 234 dots	◎	-	-	-	-	-
	7" WVGA	-	-	-	-	-	◎
	6" QVGA	◎	-	-	-	-	-
	5.7" VGA	-	◎	-	◎	-	-
Number of display colors	65536 colors	-	◎	◎	◎	◎	◎
	256 colors	◎	-	-	-	-	-
	16 colors	◎	-	-	-	-	-
	8 colors	◎	-	-	-	-	-
	2 color (yellow orange, black)	◎	-	-	-	-	-
	2 color (monochrome)	◎	-	-	-	-	-

◎: Supported -: Not supported

(2) External dimensions
For the panel cutting dimensions and mounting intervals, refer to Section 3.1.2.

■12" (GOT-A900 series)

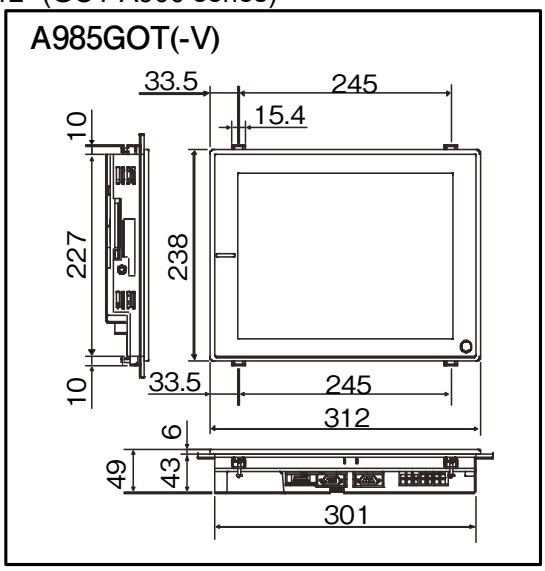

■12.1" (GOT2000 series)

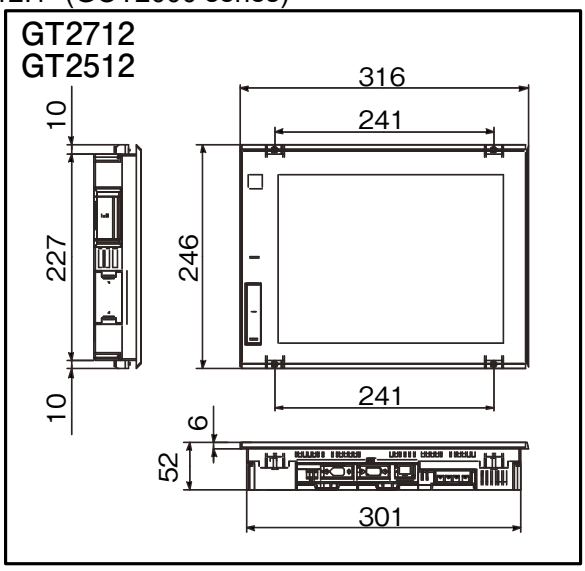

■10" (GOT-A900 series)

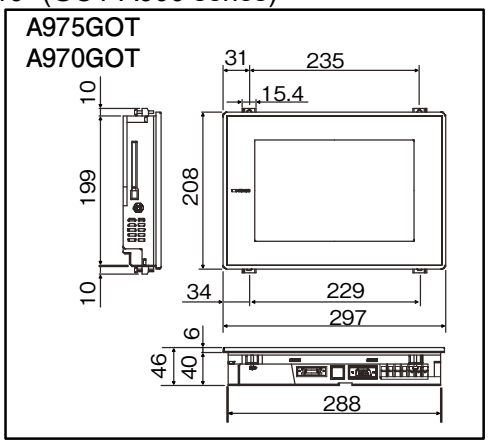

■10.4" (GOT2000 series)

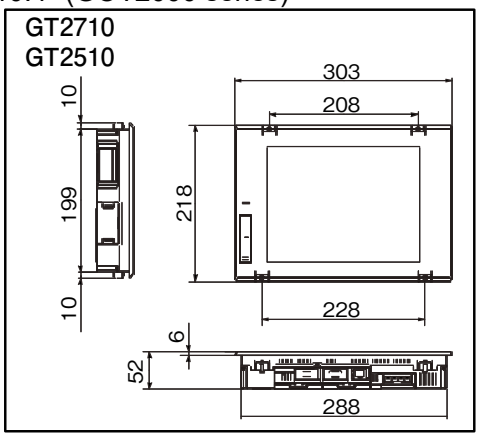

■9" (GOT-A900 series)

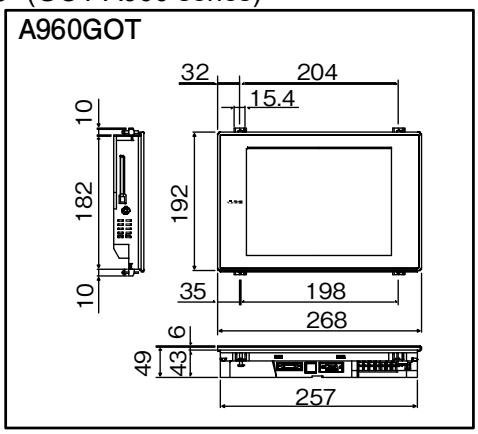

■8.4" (GOT2000series)

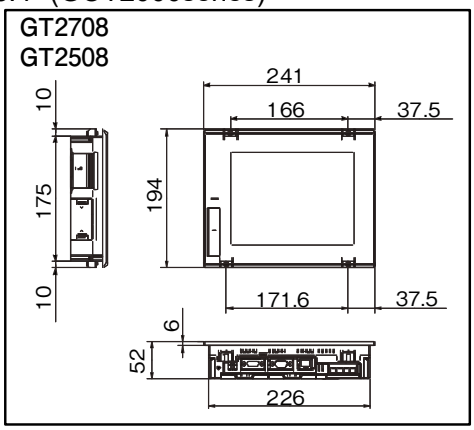

■7" Wide (GOT-A900 Series)

A956WGOT

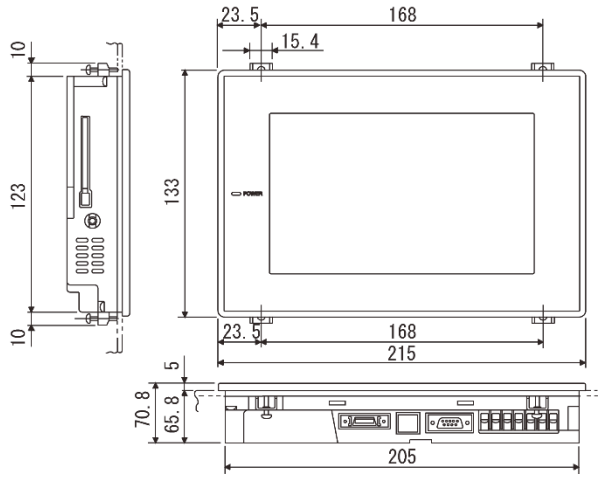

■7" Wide (GOT2000 Series)

GT2507-W

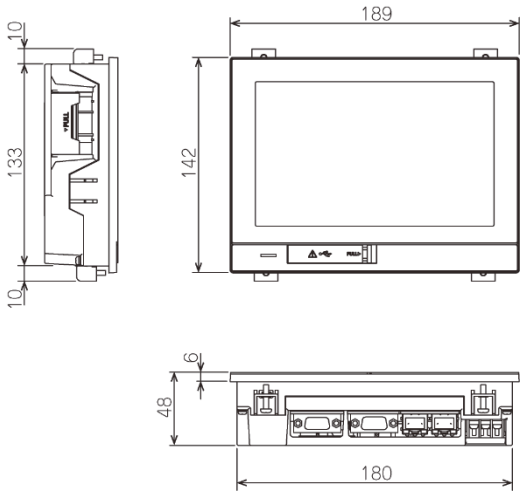

■6" QVGA(GOT-A900 Series)

A95□GOT

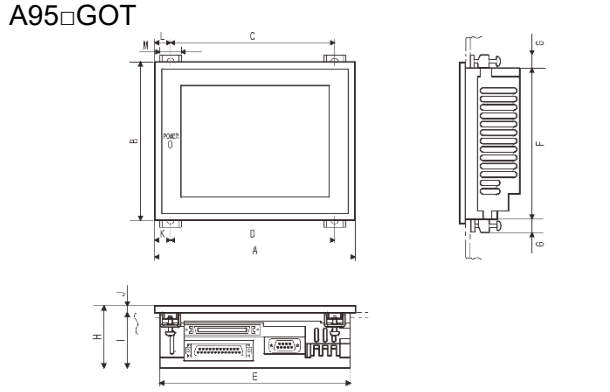

単位：mm

品　名	A	B	C	D	E	F	G	H	I	J	K	L	M
A95*GOT-(Q)TBD(-M3) A95*GOT-(Q)SBD(-M3)-B	164.5	136	125.5	130.1	155.5	123	10	65	59	8	14.9	19.5	15.4
A95*GOT-(Q)SBD/TBD(-M3)	164.5	136	125.5	130.1	155.5	123	10	57	51	8	14.9	19.5	15.4

■5.7" VGA (GOT2000 Series)

GT2505

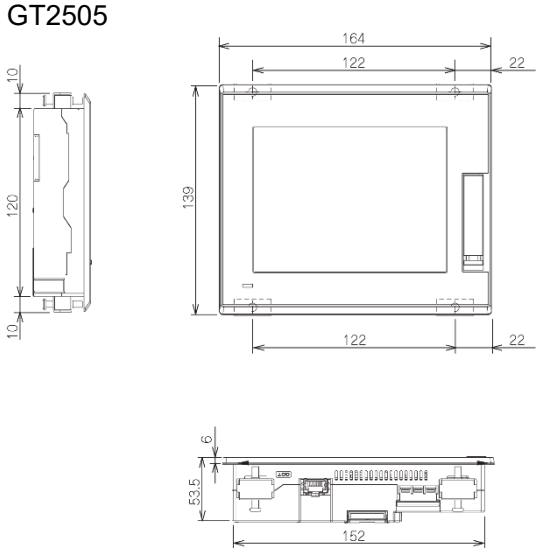

(3) Performance specifications
The following describes the comparison in the performance specifications between the GOT-A900 series and GOT2000 series.

Table 3-2 Performance comparison

Item		GOT-A900	GOT2000				
			GT27 standard	GT27 white	GT25 standard	GT25 white	GT25 Wide
Display section	Backlight	Cold cathode fluorescent tube *5	LED		LED		
	Brightness adjustment	1 level	32 levels		32 levels		
Touch panel	Type	Matrix resistive film	Analog resistive film (multi-touch compatible)		Analog resistive film		
	2-point press	Available	Available *1		Not available		
Standard memory capacity	Standard memory (ROM)	1 MB/3 MB	57 MB		32 MB		
	Maximum usable memory	8 MB (when an option is used)	128 MB (with project data compressed)		80 MB (with project data compressed)		128MB (with project data compressed)
Memory card		PC card	SD card		SD card		
Memory card access control		Controlled with the PC card access switch (rear face)	Controlled by opening/closing the SD card cover Cover closed: Access allowed Cover opened: Access prohibited		Controlled by opening/closing the SD card cover Cover closed: Access allowed Cover opened: Access prohibited		
Memory card access LED	Specifications	ON: PC card accessed OFF: PC card not accessed	ON: SD card installed OFF: SD card not installed or SD card installed but removal possible Blink: SD card accessed		ON: SD card installed OFF: SD card not installed or SD card installed but removal possible Blink: SD card accessed		
	Color	Red	Green		Green		
Color of power LED		Green/orange	Blue/orange		Blue/orange		
Standard I/F *3	Ethernet	-	1ch		1ch		2ch
	USB host	-	Front face: 1ch Rear face: 1ch	Rear face: 1ch	Front face: 1ch Rear face: 1ch	Rear face: 1ch	Rear face: 1ch
	USB device	-	Front face: 1ch	Rear face: 1ch	Front face: 1ch	Rear face: 1ch	Front face: 1ch
	RS-232	1ch (D-SUB 9-PIN CONNECTOR)	1ch (D-SUB 9-PIN CONNECTOR)		1ch (D-SUB 9-PIN CONNECTOR)		
	RS-422/485	1ch *4 (D-SUB 25-PIN CONNECTOR)	1ch (D-SUB 9-PIN CONNECTOR)		1ch (D-SUB 9-PIN CONNECTOR)		
	Printer	1ch	-		-		
	RGB output	1ch	-		-		
	Sound output	1ch	-		-		
No. of installable extension units		Communication Board: 1 slot *2 Communication Unit: 1 slot *2 Option unit: 1 slot	Up to 3 units (1 slot with 3 stages each)		Up to 3 units (1 slot with 3 stages each) *6		-

*1 Note the there are precautions on the arrangement of 2-point press switches. For the details, refer to Section 3.1.6.
*2 The communication board and communication unit cannot be used together.

*3 The equipped I/F differs depending on the model of the GOT-A900 series.
*4 The GOT-A900 series support RS-422 only.
*5 A960GOT does not have backlights.
*6 Except GT2505.

3.1.2 Installing the GOT

(1) Panel cutting dimensions
The panel cutting dimensions for GOT installation are as follows. Cut an attachment hole on the panel in the following dimensions.As the extra spaces, GT2715 requires 10 mm all around the installation fitting, and other models require 10 mm on the top and the bottom of the installation fitting respectively.

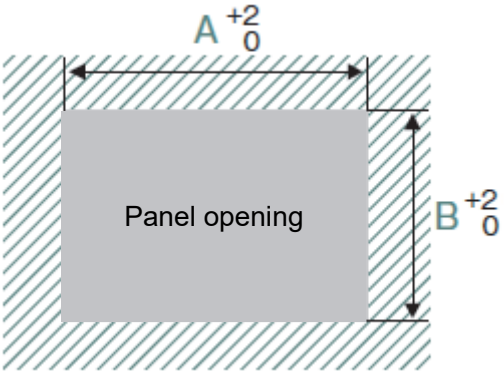

Table 3-3 Panel cutting dimension comparison

Screen size	Type			Panel cutting dimensions	
	GOT2000			A	B
	GT27	GT25	GT25 Wide		
15"	GT2715	-	-	383.5	282.5
12.1"	GT2712	GT2512	-	302	228
10.4"	GT2710	GT2510	-	289	200
10.1" Wide	-	-	GT2510-W	243.5	185.5
8.4"	GT2708	GT2508	-	227	176
7" Wide	-	-	GT2507-W	180.5	133.5
5.7"	-	-	-	153	121

単位(mm)

* Some replacement models require an attachment. Refer to "Table 2-1 Recommended replacement GOT models of the GOT2000 series" in Section 2.1.
When replacing a GOT with a model having a different screen size, change the panel cutting dimensions according to the table above.

(2) Panel thickness
The thickness of the panel to which a GOT can be mounted is as follows.

Table 3-4 Panel thickness

Item	Type			
	GOT-A900	GOT2000		
		GT27	GT25	GT25 Wide
Panel thickness to which a GOT can be mounted	2 to 4	1.6 to 4	1.6 to 4	1.6 to 4

Unit (mm)

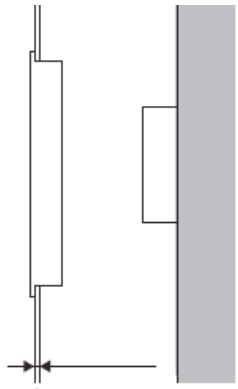

(3) Mounting intervals
When replacing the GOT-A900 series with the GOT2000 series, some models and connection methods require larger mounting intervals than the GOT-A900 series. Among mounting intervals (dimensions from A to F in the figure below), only A and F dimensions will have larger intervals. Cautions for replacement are described below. For intervals required for each product, refer to the product installation interval section in the GOT2000 catalog. In addition, when installing a communication unit or option unit on the GOT to use the multi-channel function, refer to user's manual of each communication unit and/or option for E and F dimensions.

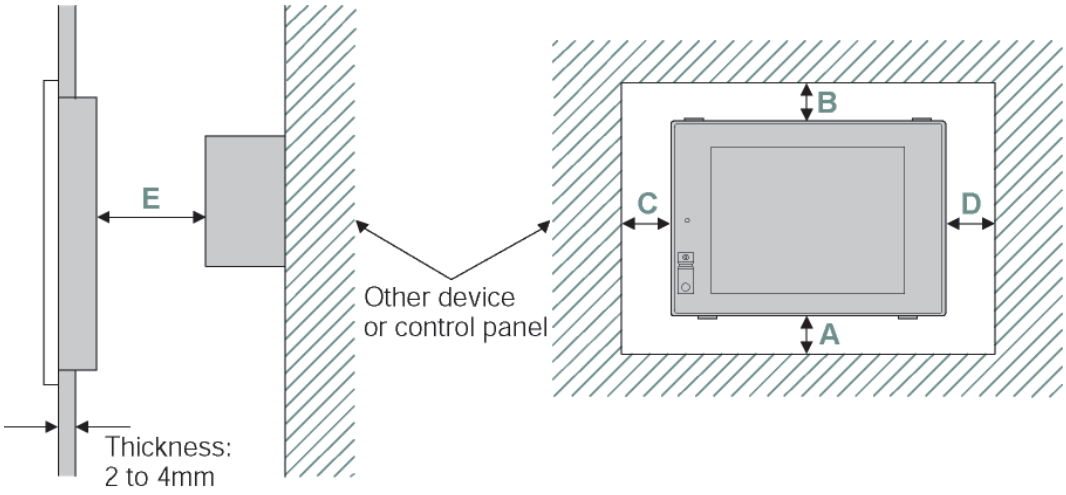

(a) Downward dimension (A dimension)

1) Bus connection
When replacing the GOT-A900 series bus connection unit with the one in the GOT2000 series, additional dimension (A dimension) is required. The dimension of each model is listed below.

Table 3-5 Downward dimension (A dimension) when connecting a bus connection unit

Unit: mm

GOT-A900 series in present use				Alternative model		
GOT model		Bus connection interface module model	A dimension	GOT model	Bus connection unit model	A dimension
A985GOT *1	A985GOT-TBA-V	A9GT-BUSSU A9GT-BUS2SU A9GT-QBUS2SU	30 or more	GT2712-STBA	GT15-QBUS GT15-QBUS2 GT15-75QBUSL GT15-75QBUS2L	48 or more (18 or more) *2
				GT2712-STWA		
	A985GOT-TBD-V			GT2712-STBD		
				GT2712-STWD		
	A985GOT-TBA			GT2712-STBA		
				GT2712-STWA		
				GT2512-STBA		
	A985GOT-TBD			GT2712-STBD		
				GT2712-STWD		
				GT2512-STBD		
	A985GOT-TBA-EU			GT2712-STBA		
				GT2712-STWA		
				GT2512-STBA		
A975GOT *1	A975GOT-TBA-B		15 or more	GT2710-VTBA		
				GT2710-VTWA		
				GT2510-VTBA		
				GT2510-VTWA		
	A975GOT-TBD-B			GT2710-VTBD		
				GT2710-VTWD		
				GT2510-VTBD		
				GT2510-VTWD		
	A975GOT-TBA			GT2710-VTBA		
				GT2710-VTWA		
				GT2510-VTBA		
				GT2510-VTWA		
	A975GOT-TBD			GT2710-VTBD		
				GT2710-VTWD		
				GT2510-VTBD		
				GT2510-VTWD		
	A975GOT-TBA-EU			GT2710-VTBA		
				GT2710-VTWA		
				GT2510-VTBA		
				GT2510-VTWA		

GOT-A900 series in present use				Alternative model		
GOT model		**Bus connection interface module model**	**A dimension**	**GOT model**	**Bus connection unit model**	**A dimension**
A970GOT *1	A970GOT-TBA-B	A9GT-BUSSU A9GT-BUS2SU A9GT-QBUS2SU	15 or more	GT2710-VTBA	GT15-QBUS GT15-QBUS2 GT15-75QBUSL GT15-75QBUS2L	48 or more (18 or more) *2
				GT2710-VTWA		
				GT2510-VTBA		
				GT2510-VTWA		
	A970GOT-TBD-B			GT2710-VTBD		
				GT2710-VTWD		
				GT2510-VTBD		
				GT2510-VTWD		
	A970GOT-TBA	A9GT-BUSSU A9GT-BUS2SU A9GT-QBUS2SU	15 or more	GT2710-VTBA	GT15-QBUS GT15-QBUS2 GT15-75QBUSL GT15-75QBUS2L	48 or more (18 or more) *2
				GT2710-VTWA		
				GT2510-VTBA		
				GT2510-VTWA		
	A970GOT-TBD			GT2710-VTBD		
				GT2710-VTWD		
				GT2510-VTBD		
				GT2510-VTWD		
	A970GOT-TBA-EU			GT2710-VTBA		
				GT2710-VTWA		
				GT2510-VTBA		
				GT2510-VTWA		
	A970GOT-SBA			GT2710-VTBA		
				GT2710-VTWA		
				GT2510-VTBA		
				GT2510-VTWA		
	A970GOT-SBD			GT2710-VTBD		
				GT2710-VTWD		
				GT2510-VTBD		
				GT2510-VTWD		
	A970GOT-SBA-EU			GT2710-VTBA		
				GT2710-VTWA		
				GT2510-VTBA		
				GT2510-VTWA		
	A970GOT-LBA			GT2710-VTBA		
				GT2710-VTWA		
				GT2510-VTBA		
				GT2510-VTWA		
				GT2708-VTBA		
				GT2508-VTBA		
				GT2508-VTWA		
	A970GOT-LBD			GT2710-VTBD		
				GT2710-VTWD		
				GT2510-VTBD		
				GT2510-VTWD		
				GT2708-VTBD		
				GT2508-VTBD		
				GT2508-VTWD		
	A970GOT-LBA-EU		30 or more	GT2710-VTBA		
				GT2710-VTWA		
				GT2510-VTBA		
				GT2510-VTWA		
				GT2708-VTBA		
				GT2508-VTBA		
				GT2508-VTWA		

GOT-A900 series in present use				Alternative model		
GOT model		**Bus connection interface module model**	**A dimension**	**GOT model**	**Bus connection unit model**	**A dimension**
A960GOT *1	A960GOT-EBA	A9GT-BUSSU A9GT-BUS2SU A9GT-QBUS2SU	30 or more	GT2708-VTBA	GT15-QBUS GT15-QBUS2 GT15-75QBUSL GT15-75QBUS2L	48 or more (18 or more) *2
				GT2508-VTBA		
				GT2508-VTWA		
	A960GOT-EBD			GT2708-VTBD		
				GT2508-VTBD		
				GT2508-VTWD		
	A960GOT-EBA-EU			GT2708-VTBA		
				GT2508-VTBA		
				GT2508-VTWA		
A956WGOT	A956WGOT-TBD	A9GT-BUSSU A9GT-BUS2SU	105 or more	GT2705-VTBD		48 or more
A956GOT	A956GOT-TBD-M3	A9GT-BUSSU A9GT-BUS2SU A9GT-QBUS2SU	130 or more			
	A956GOT-TBD					
	A956GOT-SBD-M3-B					
	A956GOT-SBD-B					
	A956GOT-SBD-M3					
	A956GOT-SBD					
	A956GOT-LBD-M3					
	A956GOT-LBD					
A951GOT	A951GOT-QTBD-M3	- (Built-in bus interface)				
	A951GOT-QTBD					
	A951GOT-QSBD-M3-B					
	A951GOT-QSBD-B					
	A951GOT-QSBD-M3					
	A951GOT-QSBD					
	A951GOT-QLBD-M3					
	A951GOT-QLBD					
	A951GOT-TBD-M3					
	A951GOT-TBD					
	A951GOT-SBD-M3-B					
	A951GOT-SBD-B					
	A951GOT-SBD-M3					
	A951GOT-SBD					
	A951GOT-LBD-M3					
	A951GOT-LBD					

*1 To use the sound output function, RGB output function, and/or printer function (when a PictBridge-compatible printer is used), the corresponding option unit is required. For details, refer to Section 2.3. In addition, the multi-channel function is required for the GOT2000 series.
Refer to the chapter of the multi-channel function in the following manual.
• GOT2000 Series Connection Manual (Mitsubishi Electric Products) For GT Works3 Version1

*2 When there is no equipment which produces radiation noise (such as contactor) or generates heat around the GOT, dimension in ( ) can be applied; however, the ambient temperature of the GOT should be under 55°C.

(b) Depth dimension (F dimension)
Mounting interval of product (E dimension) should be more than 100 mm.
When a bus connection (bus connection interface board), printer, the RGB output, sound output, or external I/O is used, the depth (F dimension) increases after the GOT is replaced with the GOT2000 series.
Necessary depth (F dimension) of each connection type and model are listed below.
In the case of using multi-channel connection, please consider additional space to attach communication units.
For the details, refer to Section 11.1 External Dimension Diagrams in the GOT2000 Series User's Manual (Hardware) (SH-081194ENG).

1) Bus connection

Table 3-6 Depth dimension (F dimension) when using the bus connection

Unit: mm

GOT-A900 series in present use				Alternative model		
GOT model		F dimension		GOT model	F dimension	
		Bus connection unit model A9GT-BUSS A9GT-BUS2S A9GT-QBUSS A9GT-QBUS2S	Built-in bus connection unit		Bus connection unit model GT15-QBUS GT15-QBUS2	Bus connection unit model GT15-75QBUSL GT15-75QBUS2L
A985GOT	A985GOT-TBA-V	43	-	GT2712-STBA	64	51
				GT2712-STWA		
	A985GOT-TBD-V			GT2712-STBD		
				GT2712-STWD		
	A985GOT-TBA			GT2712-STBA		
				GT2712-STWA		
				GT2512-STBA		
	A985GOT-TBD			GT2712-STBD		
				GT2712-STWD		
				GT2512-STBD		
	A985GOT-TBA-EU			GT2712-STBA		
				GT2712-STWA		
				GT2512-STBA		
A975GOT	A975GOT-TBA-B	40	-	GT2710-VTBA	64	51
				GT2710-VTWA		
				GT2510-VTBA		
				GT2510-VTWA		
	A975GOT-TBD-B			GT2710-VTBD		
				GT2710-VTWD		
				GT2510-VTBD		
				GT2510-VTWD		
	A975GOT-TBA			GT2710-VTBA		
				GT2710-VTWA		
				GT2510-VTBA		
				GT2510-VTWA		
A975GOT	A975GOT-TBD	40	-	GT2710-VTBD	64	51
				GT2710-VTWD		
				GT2510-VTBD		
				GT2510-VTWD		
	A975GOT-TBA-EU			GT2710-VTBA		
				GT2710-VTWA		
				GT2510-VTBA		
				GT2510-VTWA		

GOT-A900 series in present use				Alternative model		
GOT model		F dimension		GOT model	F dimension	
		Bus connection unit model A9GT-BUSS A9GT-BUS2S A9GT-QBUSS A9GT-QBUS2S	Built-in bus connection unit		Bus connection unit model GT15-QBUS GT15-QBUS2	Bus connection unit model GT15-75QBUSL GT15-75QBUS2L
A970GOT	A970GOT-TBA-B	40	-	GT2710-VTBA	64	51
				GT2710-VTWA		
				GT2510-VTBA		
				GT2510-VTWA		
	A970GOT-TBD-B			GT2710-VTBD		
				GT2710-VTWD		
				GT2510-VTBD		
				GT2510-VTWD		
	A970GOT-TBA			GT2710-VTBA		
				GT2710-VTWA		
				GT2510-VTBA		
				GT2510-VTWA		
	A970GOT-TBD			GT2710-VTBD		
				GT2710-VTWD		
				GT2510-VTBD		
				GT2510-VTWD		
	A970GOT-TBA-EU			GT2710-VTBA		
				GT2710-VTWA		
				GT2510-VTBA		
				GT2510-VTWA		
	A970GOT-SBA			GT2710-VTBA		
				GT2710-VTWA		
				GT2510-VTBA		
				GT2510-VTWA		
	A970GOT-SBD			GT2710-VTBD		
				GT2710-VTWD		
				GT2510-VTBD		
				GT2510-VTWD		
	A970GOT-SBA-EU			GT2710-VTBA		
				GT2710-VTWA		
				GT2510-VTBA		
				GT2510-VTWA		
	A970GOT-LBA			GT2710-VTBA		
				GT2710-VTWA		
				GT2510-VTBA		
				GT2510-VTWA		
				GT2708-VTBA		
				GT2508-VTBA		
				GT2508-VTWA		
	A970GOT-LBD			GT2710-VTBD		
				GT2710-VTWD		
				GT2510-VTBD		
				GT2510-VTWD		
				GT2708-VTBD		
				GT2508-VTBD		
				GT2508-VTWD		

GOT-A900 series in present use				Alternative model		
GOT model		F dimension		GOT model	F dimension	
		Bus connection unit model A9GT-BUSS A9GT-BUS2S A9GT-QBUSS A9GT-QBUS2S	Built-in bus connection unit		Bus connection unit model GT15-QBUS GT15-QBUS2	Bus connection unit model GT15-75QBUSL GT15-75QBUS2L
A970GOT	A970GOT-LBA-EU	40	-	GT2710-VTBA GT2710-VTWA GT2510-VTBA GT2510-VTWA GT2708-VTBA GT2508-VTBA GT2508-VTWA	64	51
A960GOT	A960GOT-EBA	43	-	GT2708-VTBA GT2508-VTBA GT2508-VTWA	64	51
	A960GOT-EBD			GT2708-VTBD GT2508-VTBD GT2508-VTWD		
	A960GOT-EBA-EU			GT2708-VTBA GT2508-VTBA GT2508-VTWA		
A956WGOT	A956WGOT-TBD	65.8 (A9GT-50WQBUSS A9GT-50WBUSS)	-	GT2705-VTBD	70.5	57.5
A956GOT	A956GOT-TBD-M3	59	-	GT2705-VTBD	70.5	57.5
	A956GOT-TBD					
	A956GOT-SBD-M3-B					
	A956GOT-SBD-B					
	A956GOT-SBD-M3	51				
	A956GOT-SBD					
	A956GOT-LBD-M3					
	A956GOT-LBD					
A951GOT	A951GOT-QTBD-M3	-	59			
	A951GOT-QTBD					
	A951GOT-QSBD-M3-B					
	A951GOT-QSBD-B					
	A951GOT-QSBD-M3		51			
	A951GOT-QSBD					
	A951GOT-QLBD-M3					
	A951GOT-QLBD					
	A951GOT-TBD-M3		59			
	A951GOT-TBD					
	A951GOT-SBD-M3-B					
	A951GOT-SBD-B					
	A951GOT-SBD-M3		51			
	A951GOT-SBD					
	A951GOT-LBD-M3					
	A951GOT-LBD					

2) Printer connection

Table 3-7 Depth dimension (F dimension) when connecting a printer

Unit: mm

GOT-A900 series in present use			Alternative model	
GOT model		F dimension	GOT model	F dimension
		N/A (Built-in printer interface)		Option unit model GT15-PRN
A985GOT	A985GOT-TBA-V	43	GT2712-STBA	64
			GT2712-STWA	
	A985GOT-TBD-V		GT2712-STBD	
			GT2712-STWD	
	A985GOT-TBA		GT2712-STBA	
			GT2712-STWA	
			GT2512-STBA	
	A985GOT-TBD		GT2712-STBD	
			GT2712-STWD	
			GT2512-STBD	
	A985GOT-TBA-EU		GT2712-STBA	
			GT2712-STWA	
			GT2512-STBA	
A975GOT	A975GOT-TBA-B	40	GT2710-VTBA	64
			GT2710-VTWA	
			GT2510-VTBA	
			GT2510-VTWA	
	A975GOT-TBD-B		GT2710-VTBD	
			GT2710-VTWD	
			GT2510-VTBD	
			GT2510-VTWD	
	A975GOT-TBA		GT2710-VTBA	
			GT2710-VTWA	
			GT2510-VTBA	
			GT2510-VTWA	
	A975GOT-TBD		GT2710-VTBD	
			GT2710-VTWD	
			GT2510-VTBD	
			GT2510-VTWD	
	A975GOT-TBA-EU		GT2710-VTBA	
			GT2710-VTWA	
			GT2510-VTBA	
			GT2510-VTWA	
A970GOT	A970GOT-TBA-B	40	GT2710-VTBA	64
			GT2710-VTWA	
			GT2510-VTBA	
			GT2510-VTWA	
	A970GOT-TBD-B		GT2710-VTBD	
			GT2710-VTWD	
			GT2510-VTBD	
			GT2510-VTWD	
	A970GOT-TBA		GT2710-VTBA	
			GT2710-VTWA	
			GT2510-VTBA	
			GT2510-VTWA	
	A970GOT-TBD		GT2710-VTBD	
			GT2710-VTWD	
			GT2510-VTBD	
			GT2510-VTWD	

GOT-A900 series in present use			Alternative model	
GOT model		F dimension	GOT model	F dimension
		N/A (Built-in printer interface)		Option unit model GT15-PRN
A970GOT	A970GOT-TBA-EU	40	GT2710-VTBA	64
			GT2710-VTWA	
			GT2510-VTBA	
			GT2510-VTWA	
	A970GOT-SBA		GT2710-VTBA	
			GT2710-VTWA	
			GT2510-VTBA	
			GT2510-VTWA	
	A970GOT-SBD		GT2710-VTBD	
			GT2710-VTWD	
			GT2510-VTBD	
			GT2510-VTWD	
	A970GOT-SBA-EU		GT2710-VTBA	
			GT2710-VTWA	
			GT2510-VTBA	
			GT2510-VTWA	
	A970GOT-LBA		GT2710-VTBA	
			GT2710-VTWA	
			GT2510-VTBA	
			GT2510-VTWA	
			GT2708-VTBA	
			GT2508-VTBA	
			GT2508-VTWA	
	A970GOT-LBD		GT2710-VTBD	
			GT2710-VTWD	
			GT2510-VTBD	
			GT2510-VTWD	
			GT2708-VTBD	
			GT2508-VTBD	
			GT2508-VTWD	
	A970GOT-LBA-EU		GT2710-VTBA	
			GT2710-VTWA	
			GT2510-VTBA	
			GT2510-VTWA	
			GT2708-VTBA	
			GT2508-VTBA	
			GT2508-VTWA	
A960GOT	A960GOT-EBA	43	GT2708-VTBA	69
			GT2508-VTBA	
			GT2508-VTWA	
	A960GOT-EBD		GT2708-VTBD	
			GT2508-VTBD	
			GT2508-VTWD	
	A960GOT-EBA-EU		GT2708-VTBA	
			GT2508-VTBA	
			GT2508-VTWA	

GOT-A900 series in present use			Alternative model	
GOT model		**F dimension**	**GOT model**	**F dimension**
		N/A (Built-in printer interface)		**Option unit model GT15-PRN**
A956WGOT	A956WGOT-TBD	65.8 (Installed A9GT-50PRF on the control panel)	GT2705-VTBD	77
A956GOT	A956GOT-TBD-M3	59 (Installed A9GT-50PRF on the control panel)		
	A956GOT-TBD			
	A956GOT-SBD-M3-B			
	A956GOT-SBD-B			
	A956GOT-SBD-M3	51 (Installed A9GT-50PRF on the control panel)		
	A956GOT-SBD			
	A956GOT-LBD-M3			
	A956GOT-LBD			
A953GOT	A953GOT-TBD-M3	59 (Installed A9GT-50PRF on the control panel)		
	A953GOT-TBD			
	A953GOT-SBD-M3-B			
	A953GOT-SBD-B			
	A953GOT-SBD-M3	51 (Installed A9GT-50PRF on the control panel)		
	A953GOT-SBD-M3			
	A953GOT-LBD-M3			
	A953GOT-LBD			
A951GOT	A951GOT-QTBD-M3	59 (Installed A9GT-50PRF on the control panel)		
	A951GOT-QTBD			
	A951GOT-QSBD-M3-B			
	A951GOT-QSBD-B			
	A951GOT-QSBD-M3	51 (Installed A9GT-50PRF on the control panel)		
	A951GOT-QSBD			
	A951GOT-QLBD-M3			
	A951GOT-QLBD			
	A951GOT-TBD-M3	59 (Installed A9GT-50PRF on the control panel)		
	A951GOT-TBD			
	A951GOT-SBD-M3-B			
	A951GOT-SBD-B			
	A951GOT-SBD-M3	51 (Installed A9GT-50PRF on the control panel)		
	A951GOT-SBD			
	A951GOT-LBD-M3			
	A951GOT-LBD			
A950GOT	A950GOT-TBD-M3	59 (Installed A9GT-50PRF on the control panel)		
	A950GOT-TBD			
	A950GOT-SBD-M3-B			
	A950GOT-SBD-B			
	A950GOT-SBD-M3	51 (Installed A9GT-50PRF on the control panel)		
	A950GOT-SBD			
	A950GOT-LBD-M3			
	A950GOT-LBD			

3) Sound output

Table 3-8 Depth dimension (F dimension) when using the sound output unit

Unit: mm

GOT-A900 series in present use			Alternative model	
GOT model		F dimension Built-in printer interface	GOT model	F dimension Option unit model GT15-SOUT
A985GOT	A985GOT-TBA-V	43	GT2712-STBA	69
			GT2712-STWA	
	A985GOT-TBD-V		GT2712-STBD	
			GT2712-STWD	
	A985GOT-TBA		GT2712-STBA	
			GT2712-STWA	
			GT2512-STBA	
	A985GOT-TBD		GT2712-STBD	
			GT2712-STWD	
			GT2512-STBD	
	A985GOT-TBA-EU		GT2712-STBA	
			GT2712-STWA	
			GT2512-STBA	
A975GOT	A975GOT-TBA-B	40	GT2710-VTBA	69
			GT2710-VTWA	
			GT2510-VTBA	
			GT2510-VTWA	
	A975GOT-TBD-B		GT2710-VTBD	
			GT2710-VTWD	
			GT2510-VTBD	
			GT2510-VTWD	
	A975GOT-TBA		GT2710-VTBA	
			GT2710-VTWA	
			GT2510-VTBA	
			GT2510-VTWA	
	A975GOT-TBD		GT2710-VTBD	
			GT2710-VTWD	
			GT2510-VTBD	
			GT2510-VTWD	
	A975GOT-TBA-EU		GT2710-VTBA	
			GT2710-VTWA	
			GT2510-VTBA	
			GT2510-VTWA	
A970GOT	A970GOT-TBA-B	40	GT2710-VTBA	69
			GT2710-VTWA	
			GT2510-VTBA	
			GT2510-VTWA	
	A970GOT-TBD-B		GT2710-VTBD	
			GT2710-VTWD	
			GT2510-VTBD	
			GT2510-VTWD	
	A970GOT-TBA		GT2710-VTBA	
			GT2710-VTWA	
			GT2510-VTBA	
			GT2510-VTWA	
	A970GOT-TBD		GT2710-VTBD	
			GT2710-VTWD	
			GT2510-VTBD	
			GT2510-VTWD	

GOT-A900 series in present use			Alternative model	
GOT model		F dimension Built-in printer interface	GOT model	F dimension Option unit model GT15-SOUT
A970GOT	A970GOT-TBA-EU	40	GT2710-VTBA	69
			GT2710-VTWA	
			GT2510-VTBA	
			GT2510-VTWA	
	A970GOT-SBA		GT2710-VTBA	
			GT2710-VTWA	
			GT2510-VTBA	
			GT2510-VTWA	
	A970GOT-SBD		GT2710-VTBD	
			GT2710-VTWD	
			GT2510-VTBD	
			GT2510-VTWD	
	A970GOT-SBA-EU		GT2710-VTBA	
			GT2710-VTWA	
			GT2510-VTBA	
			GT2510-VTWA	
	A970GOT-LBA		GT2710-VTBA	
			GT2710-VTWA	
			GT2510-VTBA	
			GT2510-VTWA	
			GT2708-VTBA	
			GT2508-VTBA	
			GT2508-VTWA	
	A970GOT-LBD		GT2710-VTBD	
			GT2710-VTWD	
			GT2510-VTBD	
			GT2510-VTWD	
			GT2708-VTBD	
			GT2508-VTBD	
			GT2508-VTWD	
	A970GOT-LBA-EU		GT2710-VTBA	
			GT2710-VTWA	
			GT2510-VTBA	
			GT2510-VTWA	
			GT2708-VTBA	
			GT2508-VTBA	
			GT2508-VTWA	
A960GOT	A960GOT-EBA	43	GT2708-VTBA	69
			GT2508-VTBA	
			GT2508-VTWA	
	A960GOT-EBD		GT2708-VTBD	
			GT2508-VTBD	
			GT2508-VTWD	
	A960GOT-EBA-EU		GT2708-VTBA	
			GT2508-VTBA	
			GT2508-VTWA	

4) External I/O

Table 3-9 Depth dimension (F dimension) when using the external I/O unit

Unit: mm

GOT-A900 series in present use			Alternative model	
GOT model		F dimension Option unit model A9GT-70KBF	GOT model	F dimension Option unit model GT15-DIO, GT15-DIOR
A985GOT	A985GOT-TBA-V	85.6	GT2712-STBA	69
			GT2712-STWA	
	A985GOT-TBD-V		GT2712-STBD	
			GT2712-STWD	
	A985GOT-TBA		GT2712-STBA	
			GT2712-STWA	
			GT2512-STBA	
	A985GOT-TBD		GT2712-STBD	
			GT2712-STWD	
			GT2512-STBD	
	A985GOT-TBA-EU		GT2712-STBA	
			GT2712-STWA	
			GT2512-STBA	
A975GOT	A975GOT-TBA-B	82.6	GT2710-VTBA	69
			GT2710-VTWA	
			GT2510-VTBA	
			GT2510-VTWA	
	A975GOT-TBD-B		GT2710-VTBD	
			GT2710-VTWD	
			GT2510-VTBD	
			GT2510-VTWD	
	A975GOT-TBA		GT2710-VTBA	
			GT2710-VTWA	
			GT2510-VTBA	
			GT2510-VTWA	
	A975GOT-TBD		GT2710-VTBD	
			GT2710-VTWD	
			GT2510-VTBD	
			GT2510-VTWD	
	A975GOT-TBA-EU		GT2710-VTBA	
			GT2710-VTWA	
			GT2510-VTBA	
			GT2510-VTWA	
A970GOT	A970GOT-TBA-B	82.6	GT2710-VTBA	69
			GT2710-VTWA	
			GT2510-VTBA	
			GT2510-VTWA	
	A970GOT-TBD-B		GT2710-VTBD	
			GT2710-VTWD	
			GT2510-VTBD	
			GT2510-VTWD	
	A970GOT-TBA		GT2710-VTBA	
			GT2710-VTWA	
			GT2510-VTBA	
			GT2510-VTWA	
	A970GOT-TBD		GT2710-VTBD	
			GT2710-VTWD	
			GT2510-VTBD	
			GT2510-VTWD	

GOT-A900 series in present use			Alternative model	
GOT model		F dimension Option unit model A9GT-70KBF	GOT model	F dimension Option unit model GT15-DIO, GT15-DIOR
A970GOT	A970GOT-TBA-EU	82.6	GT2710-VTBA	69
			GT2710-VTWA	
			GT2510-VTBA	
			GT2510-VTWA	
	A970GOT-SBA		GT2710-VTBA	
			GT2710-VTWA	
			GT2510-VTBA	
			GT2510-VTWA	
	A970GOT-SBD		GT2710-VTBD	
			GT2710-VTWD	
			GT2510-VTBD	
			GT2510-VTWD	
	A970GOT-SBA-EU		GT2710-VTBA	
			GT2710-VTWA	
			GT2510-VTBA	
			GT2510-VTWA	
	A970GOT-LBA		GT2710-VTBA	
			GT2710-VTWA	
			GT2510-VTBA	
			GT2510-VTWA	
			GT2708-VTBA	
			GT2508-VTBA	
			GT2508-VTWA	
	A970GOT-LBD		GT2710-VTBD	
			GT2710-VTWD	
			GT2510-VTBD	
			GT2510-VTWD	
			GT2708-VTBD	
			GT2508-VTBD	
			GT2508-VTWD	
	A970GOT-LBA-EU		GT2710-VTBA	
			GT2710-VTWA	
			GT2510-VTBA	
			GT2510-VTWA	
			GT2708-VTBA	
			GT2508-VTBA	
			GT2508-VTWA	
A960GOT	A960GOT-EBA	85.6	GT2708-VTBA	69
			GT2508-VTBA	
			GT2508-VTWA	
	A960GOT-EBD		GT2708-VTBD	
			GT2508-VTBD	
			GT2508-VTWD	
	A960GOT-EBA-EU		GT2708-VTBA	
			GT2508-VTBA	
			GT2508-VTWA	

GOT-A900 series in present use			Alternative model	
GOT model		**F dimension** **Option unit model** **A9GT-70KBF**	**GOT model**	**F dimension** **Option unit model** **GT15-DIO, GT15-DIOR**
A956WGOT	A956WGOT-TBD	65.8 (When installing on the control panel)	GT2705-VTBD	77
A956GOT	A956GOT-TBD-M3	59 (When installing on the control panel)		
	A956GOT-TBD			
	A956GOT-SBD-M3-B			
	A956GOT-SBD-B			
	A956GOT-SBD-M3	51 (When installing on the control panel)		
	A956GOT-SBD			
	A956GOT-LBD-M3			
	A956GOT-LBD			
A953GOT	A953GOT-TBD-M3	59 (When installing on the control panel)		
	A953GOT-TBD			
	A953GOT-SBD-M3-B			
	A953GOT-SBD-B			
	A953GOT-SBD-M3	51 (When installing on the control panel)		
	A953GOT-SBD-M3			
	A953GOT-LBD-M3			
	A953GOT-LBD			
A951GOT	A951GOT-QTBD-M3	59 (When installing on the control panel)	GT2705-VTBD	77
	A951GOT-QTBD			
	A951GOT-QSBD-M3-B			
	A951GOT-QSBD-B			
	A951GOT-QSBD-M3	51 (When installing on the control panel)		
	A951GOT-QSBD			
	A951GOT-QLBD-M3			
	A951GOT-QLBD			
	A951GOT-TBD-M3	59 (When installing on the control panel)		
	A951GOT-TBD			
	A951GOT-SBD-M3-B			
	A951GOT-SBD-B			
	A951GOT-SBD-M3	51 (When installing on the control panel)		
	A951GOT-SBD			
	A951GOT-LBD-M3			
	A951GOT-LBD			
A950GOT	A950GOT-TBD-M3	59 (When installing on the control panel)		
	A950GOT-TBD			
	A950GOT-SBD-M3-B			
	A950GOT-SBD-B			
	A950GOT-SBD-M3	51 (When installing on the control panel)		
	A950GOT-SBD			
	A950GOT-LBD-M3			
	A950GOT-LBD			

3.1.3 Memory card insertion direction

The applicable memory cards for the GOT-A900 series are PC cards, and those for the GOT2000 series (GT27 models and GT25 models) are SD cards.
Applicable memory cards differ from those for the GOT-A900 series. Consider the dimensions and others at insertion.
For the details, refer to Section 3.1.2 or the GOT2000 Series User's Manual (Hardware) (SH-081194ENG).

(1) GOT2000 series: Except GT25-W and GT2505-V (SD card)

<Insertion position: GOT rear face>

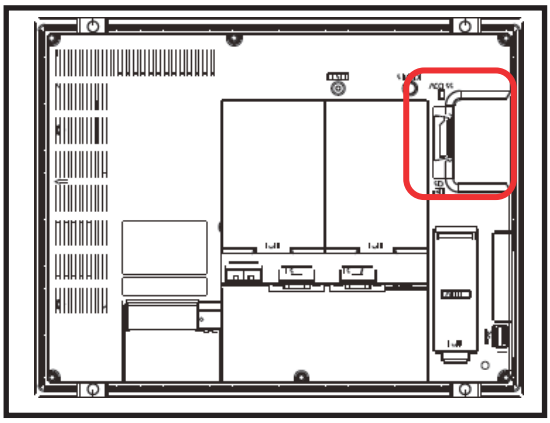

<Inserting direction>

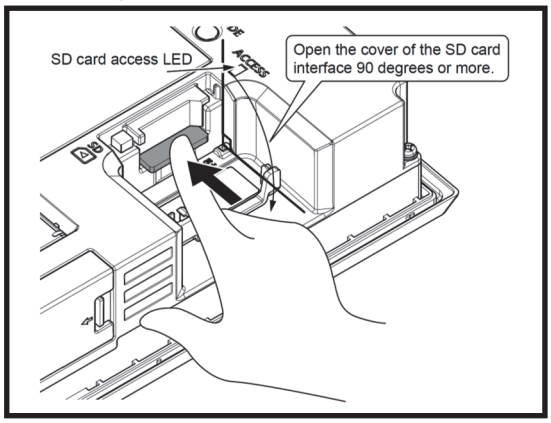

(2) GOT2000 series: GT25-W (SD card)

<Insertion position: GOT rear face>

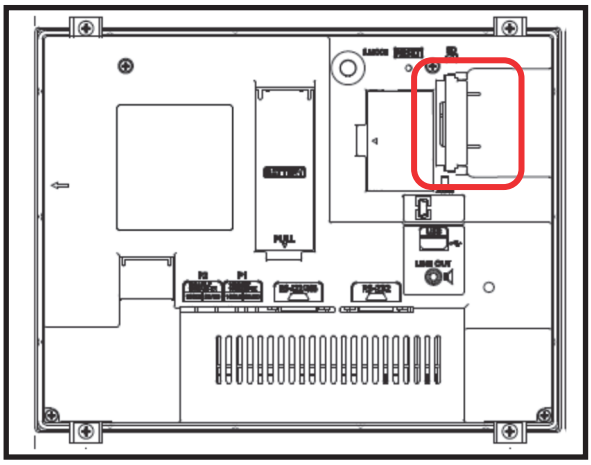

<Inserting direction>

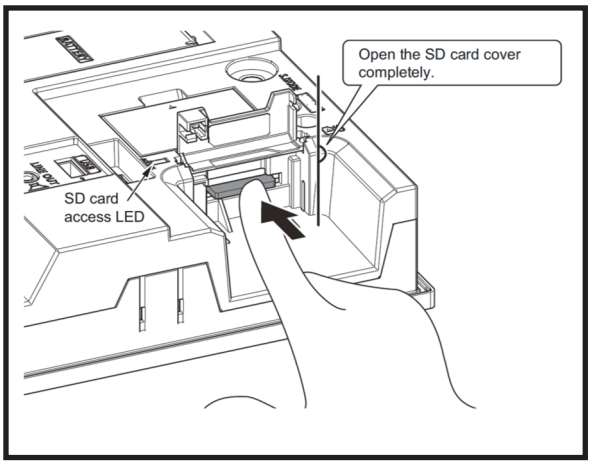

(3) GOT2000 series: GT2505-V (SD card)

<Insertion position: GOT rear face>

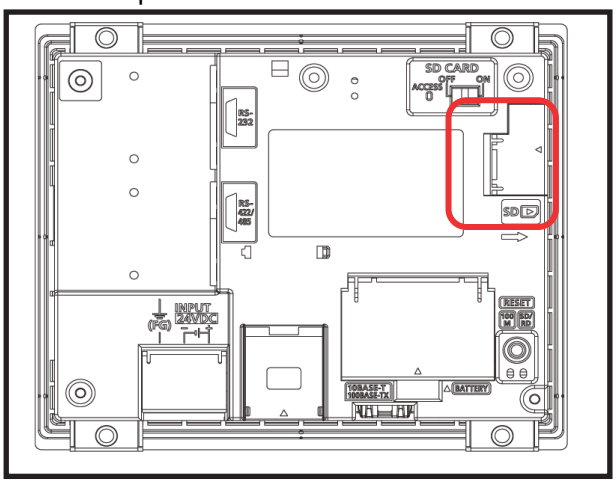

<Inserting direction>

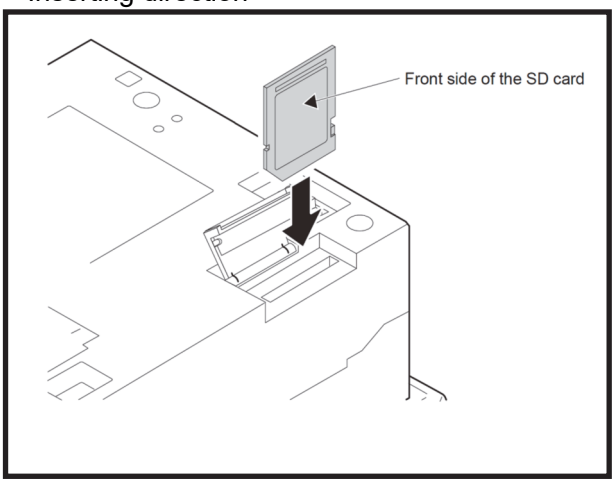

3.1.4 Comparison in utility specifications

(1) Change in the utility call key setting

While a user-created screen is displayed, touching the utility call key displays the main menu.
The following lists the default position of the utility call key and default setting of the hold-down time of the GOT2000 series (GT27 and GT25).
The position of the utility call key and setting of the hold-down time can be changed with the GOT utility or the screen design software GT Designer3 (GOT2000).

■Default position of the utility call key for GT27 and GT25 models

Model	Utility call key (factory setting)
GT27 GT25	1-point press on GOT screen upper-left corner (Hold-down time: two seconds) 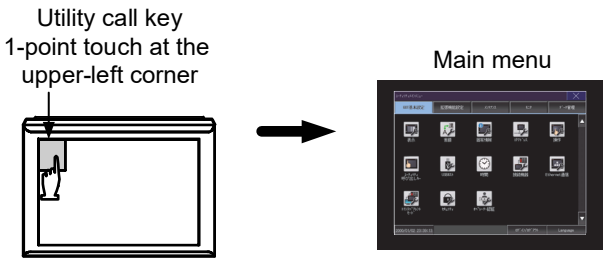

3.1.5 Precautions for hardware replacement

The following table lists precautions for replacement of hardware of the GOT-A900 series with that of the GOT2000 series.

Table 3-10 List of precautions for hardware replacement

Item	Replacing GOT-A900 with GT27	Replacing GOT-A900 with GT25
External dimensions	Even models having the same LCD size have different external dimensions.	
Memory card	The PC card must be changed to an SD card.	
Touch panel	The operational feeling (touch pressure) differs because the touch panel mechanism is different.	
Touch panel "2-point press"	GT27 accepts the 2-point press.	The 2-point press is unavailable to GT25 models.
Communication unit/option unit	The GOT-A900 series communication units and option units cannot be used with the GOT2000 series. Use the communication units and option units dedicated to the GOT2000 series.	
Maximum number of installable option units	For the GOT2000 series, up to 3 option units (3 stages, each with 1 slot) can be installed. (Since the GT25 wide and GT2505 do not have an extension interface, the option unit cannot be installed on them. The wireless LAN module can be installed on the GT25 wide.)	
RGB output	Use an RGB output unit (GT27-ROUT) for the GOT2000 series.	GT25 does not support the RGB output.
Sound output	Use a sound output unit (GT15-SOUT) for the GOT2000 series.	

For the differences in the functions after the replacement, refer to Section 3.2.

3.1.6 Precautions for arrangement of a 2-point press switch

When arranging 2-point press switches for GT27 models, note the following.

(1) Arrangement of 2-point press switches

The following shows both arrangement patterns where 2-point press switches can be placed and cannot be placed.

Arrangement pattern of 2-point press	Detectability	Detection of 2-point press
1) Within a cell	×	No 2-point press can be accepted. (Correct coordinates may not be detected.)
2) On the same border	×	No 2-point press can be detected. (Regarded as not touched.)
3) On a border and within an adjacent cell of the border	×	No 2-point press can be detected. (Regarded as not touched.)
4) On the different borders	○	2-point press can be accepted.
5) In different cells, not on borders	○	2-point press can be accepted.

○: 2-point press accepted ×: 2-point press not accepted

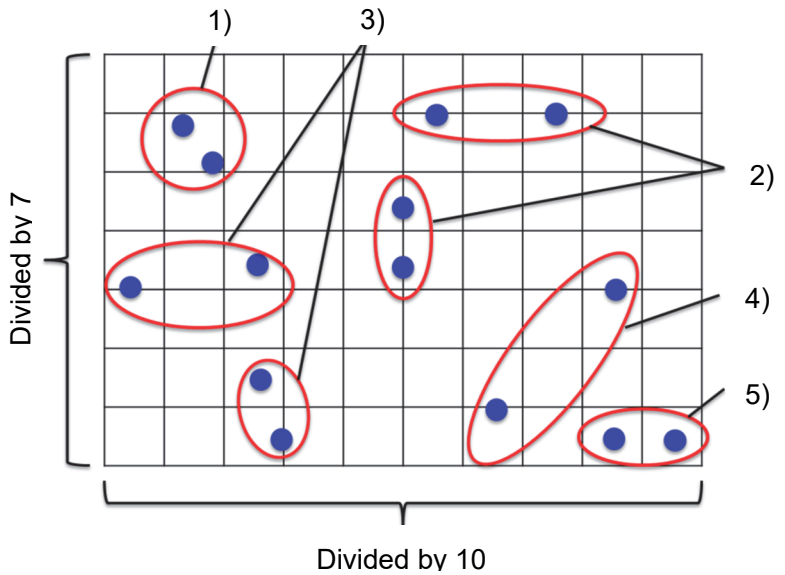

(2) Precautions for arrangement of the switch
With GT27 models, the following 2-point press patterns are not accepted.
The "2-point press inactive area" can be displayed on the editor of the screen design software.

(a) Cells defined by dividing the resolution of the display area by 7 vertically and 10 horizontally are called the "2-point press inactive area". Touching two points inside this area cannot be accepted.

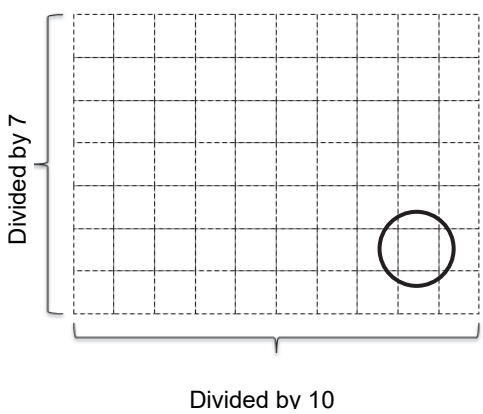

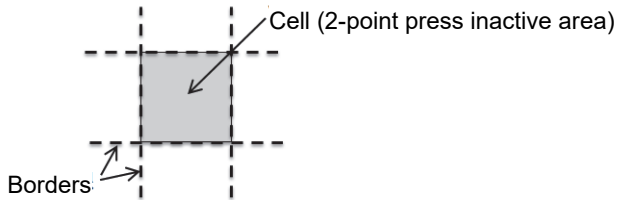

Resolution	Cell size (W × H) [dot]
XGA (1024 × 768)	102 × 109
SVGA (800 × 600)	80 × 85
VGA (600 × 480)	64 × 68

The height of cells is an approximation.

(b) If two points on a border between "2-point press inactive areas" are touched simultaneously, the touch is not detected.

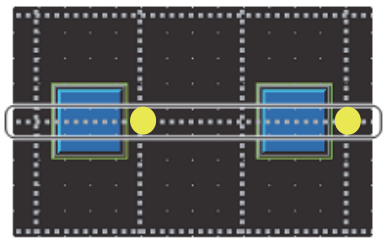

(c) If one point on a border between "2-point press inactive areas" and one point inside an adjacent cell of the border are touched simultaneously, the touch is not detected.

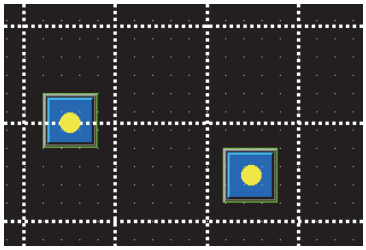

(3) Measures for the precautions of 2-point press

As measures for the precautions described in section (2), consider the following when placing 2-point press switches.

■ Do not place two or more switches inside one "2-point press inactive area".

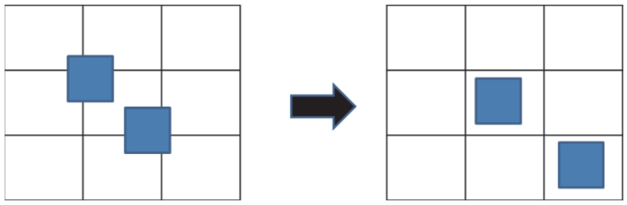

Do not place switches inside one cell.

■ Place 2-point press switches inside cells so that the borders will not be touched. Or, place the largest switches possible so that each center is not on any borders.

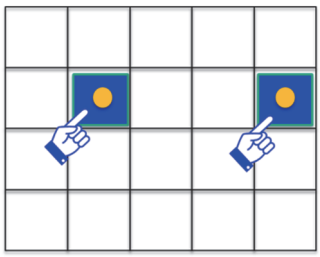

Place switches inside cells.

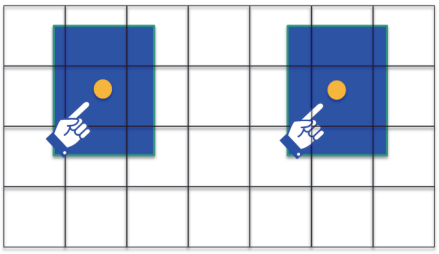

Place large switches so that each center is not on any borders.

3.2 Function specifications

3.2.1 Comparison in functions

Most of the functions of the GOT-A900 series can be used in the GOT2000 series; however, some functions are not supported or are integrated, or their names have been changed. For the details, refer to "Table 3-10 GOT2000 function comparison table".
For each function of the GOT2000 series, refer to the manual.

(1) Functions not supported by the GOT2000 series
• A list editor
• Data list display
• A ladder monitor
• Q/QnA ladder monitor
* Among Q/QnA ladder monitors, the ladder monitor for QnACPU is not supported. The ladder monitor for Q/LCPU is supported.

(2) Integrated functions and functions with changed names

Function name in GOT-A900	Function name in GOT2000
Alarm history, alarm history display	User alarm observation, alarm display (user)
Status observation function	Trigger action
Q/QnA ladder monitor	Sequence program monitor (ladder) * QnACPU is not supported.
ASCII display, ASCII input	Text Display/Input
User alarm display	Simple
System monitor	Device monitor
Transparent	FA Transparent
Special module monitor	Intelligent function module

3.2.2 Detailed comparison in functions

(1) Detailed comparison in functions
The following table shows the differences in the functions between the GOT-A900 series and GOT2000 series.

Table 3-11 GOT2000 function comparison table

Item		Function name in GOT-A900	GOT-A900	GT27	GT25	Precautions for GOT-A900-to-GOT2000 replacement and new function
Figure/object function	Shapes	Shapes	●	●	●	[New function of GOT2000] • Image data in the JPEG or PNG (Portable Network Graphic) format and IGES files can be imported.
		Logo Text	×	● New function	● New function	[New function of GOT2000] • The logo text can be used.
	Font type	Standard Font	●	●	●	[New function of GOT2000] • Gothic and Mincho fonts can be used together as 16-dot standard fonts.
		HQ font	●	●	●	-
		TrueType font	×	● New function	● New function	[New function of GOT2000] • The TrueType font can be used.
		Outline font	×	● New function	● New function	[New function of GOT2000] • The outline font can be used.
		Windows font	×	● New function	● New function	[New function of GOT2000] • The Windows font can be used.
	Common	Display/hide control	×	● New function	● New function	[New function of GOT2000] • Objects can be displayed and hidden using bit devices.
		Text	●	●	●	[New function of GOT2000] • The maximum number of characters in a direct test is expanded to 1024.
		Trigger type	×	● New function	● New function	[New function of GOT2000] • The trigger type can be used.
		Offset device	●	●	●	[New function of GOT2000] • As the data type of offset devices, 32-bit (signed BIN32) can be specified. [Precautions] • Refer to Section 3.3.4 (8).
		Number of colors	●	●	●	[New function of GOT2000] • For characters and objects, such as lines and rectangles, 65536 colors are prepared. (For the free figure drawing function of the object scripts, 256 colors are prepared.)
		Buffer memory unit No. switching	×	● Ver1.122C or later New function	● Ver1.122C or later New function	[New function of GOT2000] • The buffer memory unit No. can be switched using devices.

●(Without version) : Supported by GT Works3 Ver1.100E or later for GT27 models
Supported by GT Works3 Ver1.112S or later for GT25 models
●Ver1.**** : Supported by the written version
× : Not supported by the GOT2000 series

Item		Function name in GOT-A900	GOT-A900	GT27	GT25	Precautions for GOT-A900-to-GOT2000 replacement and new function
Figure/object function	Object	Touch switch	●	●	●	[Precautions] • The special function switches that GOT2000 does not support are replaced with [Utility]. [New function of GOT2000] • Touch switches can be superimposed in the same layer. (Separate setting is required to adjust the object display order in the GOT to the one in GT Designer3.) • A character code can be specified for key code switches. (ASCII, S-JIS, GB, Big5, or not specify)
		Lamp	●	●	●	[Precautions] • The [Use Image Transparent] setting for when objects registered in the library are used will be deleted. Transparent color is effective in GOT2000 regardless of the settings in GOT-A900.
		Numerical Display/Input	●	●	●	[Precautions] • The rounding setting of real numbers is replaced as follows. When using GT Designer3 Version1.105K or earlier: "Round down" When using GT Designer3 Version1.106L or later: "Round off" [New function of GOT2000] • The rounding setting of real numbers can be selected from “Round off”, “Round down”, or “Round up”.
		ASCII display/input	●	●	●	[Precautions] • Replaced with [Text Display] or [Text Input]. • The [Character Code]] setting of key code switches is replaced as follows. When using GT Designer3 Version1.106L or earlier: "ASCII" When using GT Designer3 Version1.108N or later: "Not specify" [New function of GOT2000] • The character code to be displayed and input can be specified. (ASCII, S-JIS, GB, or Big5)
		Date/Time Display	●	●	●	[New function of GOT2000] • The clock can be set synchronized with the SNTP server.
		Comment Display	●	●	●	-
		Comment group	×	● New function	● New function	[New function of GOT2000] • The comment group can be used.
		Parts Display	●	●	●	[Precautions] • When [Fixed Parts Display] is used, [Rise] and [Fall] are replaced with [ON] and [OFF].
		Parts movement	●	●	●	-
		Data list display	●	×	×	[Precautions] • Not supported by GOT2000.
		User alarm display	●	●	●	[Precautions] • Replaced with [Simple Alarm Display]. • [Rise], [Fall], and [Sampling] of the trigger type setting are replaced with [Ordinary]. • Text alignment of the comment setting (multiple rows) will be deleted. Text are aligned left in GOT2000 regardless of the setting of GOT-A900. • [Store Memory] is not supported. When [Store Memory] is used, replace it with [User Alarm Observation] or [Alarm Display(User)].

Item		Function name in GOT-A900	GOT-A900	GT27	GT25	Precautions for GOT-A900-to-GOT2000 replacement and new function
Figure/object function	Object	System Alarm Display	●	●	●	[New function of GOT2000] • Details of system alarms are displayed. (such as CH No., network No., station No., CPU No., device, screen No., screen definition No., object ID, function name, drive name)
		Historical Data List Display	×	● New function	● New function	[New function of GOT2000] • The historical data list display can be used.
		Alarm history, alarm history display	●	●	●	[Precautions] • Replaced with [User Alarm Observation] or [Alarm Display(User)]. • Replaced with [Time (hh:mm)] when [Text] is set as the date/time format for [Occurred], [Restored], and [Checks] of the displayed items in [Alarm History Display]. • When [CREATE A CSV FILE SIMULTANEOUSLY] is selected in [Alarm History], set the setting again in [Alarm Common Setting] of [User Alarm Observation] with GOT2000. [New function of GOT2000] • A USB drive (B, E, F, or G) can be specified as a destination to save files. • The alarm display can be scrolled with gesture operation. (Object gesture function)
		Scrolling alarm display	●	●	●	[Precautions] • The alarm popup is scrolled more smoothly.
		Level object	●	●	●	-
		Panel Meter	●	●	●	[Precautions] • [Top 1/4], [Bottom 1/4], [Left 1/4], and [Right 1/4] are replaced with [Top 1/6], [Bottom 1/6], [Left 1/6], and [Right 1/6] respectively. The display size is not changed.
		Line Graph	●	●	●	[Precautions] • [Locus] is not supported.
		Trend Graph	●	●	●	[Precautions] • Replaced with [Historical Trend Graph] or [Logging] when [Store Memory] is set. However, this function will be deleted when the number of logging settings exceeds the upper limits.
		Bar Graph	●	●	●	-
		Statistics	●	●	●	-
		Statistics per screen	●	●	●	-
		Scatter Graph	●	●	●	-
		Historical Trend Graph	×	● New function	● New function	[New function of GOT2000] • The historical trend graph can be used.
		Slider	×	● Ver1.108N or later New function	● New function	[New function of GOT2000] • The slider can be used.
		Document Display	×	● New function	● New function	[New function of GOT2000] • The document display can be used.
		Key Window Object	×	● New function	● New function	[New function of GOT2000] • The key window object can be used.

Item	Function name in GOT-A900	GOT-A900	GT27	GT25	Precautions for GOT-A900-to-GOT2000 replacement and new function
Functions performed on background	Logging	×	● New function	● New function	[New function of GOT2000] • The logging can be used.

	Recipe	●	●	●	[Precautions]
					• The following function is not supported.
					  • Creating a recipe file automatically if no recipe file is found at startup
					  • Specifying the file register name
					• The format of recipe file (CSV/Unicode text) is different. When using a recipe file of GOT-A900 in GOT2000, change the format into the one for GOT2000. For the details, refer to Section 3.2.2(2).
					
					[New function of GOT2000]
					• A CSV or Unicode text file can be created per record, and the recipe can be executed.
					• A record can be specified in the recipe operation screen, and a recipe can be executed.
					• [Real] and [Text] can be specified as the device type.
					• The maximum number of devices is expanded to 65536.
					• A USB drive (B, E, F, or G) can be specified as a destination to save files.

	Device data transfer	×	● New function	● New function	[New function of GOT2000] • The device data transfer can be used.
	Status observation function	●	●	●	[Precautions] • Replaced with [Trigger Action].
	Time action	●	●	●	[New function of GOT2000] • The time action setting file can be saved in the GOT.
	Hard copy (File output)	●	●	●	[Precautions] • The setting of the trigger watch cycle will be deleted. The trigger watch cycle is set to [Ordinary] regardless of the setting in GOT-A900. [New function of GOT2000] • A USB drive (B, E, F, or G) can be specified as a destination to save files.
	Hard copy (Parallel printer output)	●	×	×	[Precautions] • GOT2000 supports the serial printer output. • The setting of the trigger watch cycle will be deleted. The trigger watch cycle is set to [Ordinary] regardless of the setting in GOT2000.
	Hard copy (Serial printer output)	×	● Ver1.105K or later	●	
	Hard copy (PictBridge printer output)	×	● Ver1.105K or later New function	● New function	[New function of GOT2000] • The hard copy supports the PictBridge printer output.

Item	Function name in GOT-A900	GOT-A900	GT27	GT25	Precautions for GOT-A900-to-GOT2000 replacement and new function
Functions performed on background	Project/screen script	●	●	●	[Precautions] • The setting of [Cancel internal device (GD/GB) assignment delay] will be deleted. In GOT2000, the result of assignment of internal devices (GD/GB) is reflected immediately regardless of the setting in GOT-A900 • [Perform script initial operation (screen/object) only when switching screens] is added to GOT2000. The setting will be replaced as follows. When using GT Designer3 Version1.103H or earlier: Checked When using GT Designer3 Version1.105K or later: Not checked [New function of GOT2000] • Offsets can be used for devices of the project script. • Offsets can be used for bit devices. • S-JIS can be used for the string operation function.
	Object Script	×	● New function	● New function	[New function of GOT2000] • The object script can be used.
Functions used with peripheral devices	Barcode	●	●	●	-
	RFID	×	● New function	● New function	[New function of GOT2000] • The RFID function can be used.
	PC Remote Operation function (Ethernet)	×	● New function	● New function	[New function of GOT2000] • This function remotely operates the personal computer from the GOT via Ethernet. [Precautions] • Purchase separately since the license is different.
	PC Remote Operation function (Serial)	×	● New function	● New function	-
	GOT remote access function (VNC server function)	×	● New function	● New function	[New function of GOT2000] • This function remotely operates the GOT from the personal computer via Ethernet with VNC. [Precautions] • Purchase separately since the license is different.
	Video Display function	●	●	×	-
	RGB Display function	●	●	×	-
	Multimedia function	×	● New function	×	[New function of GOT2000] • The multimedia function can be used.
	External I/O function	●	●	●	-
	Operation panel function	●	● Ver1.108N or later	●	-
	RGB Output	●	●	●	-

Item	Function name in GOT-A900	GOT-A900	GT27	GT25	Precautions for GOT-A900-to-GOT2000 replacement and new function
Functions used with peripheral devices	Report function (Parallel printer output)	●	×	×	[New function of GOT2000] • The report function supports the PictBridge printer output. [Precautions] • GOT2000 supports the serial printer output. • GOT2000 does not support the GOT-A900 function to print alarm histories of the alarm history display function. Save an alarm history file to an SD card in the CSV format, and use Microsoft® Excel® and others with a personal computer to print the history. • GOT2000 supports GOT-A900 project data with the report style setting [Log/Page] only. Set the report style to [Log/Page] on the drawing software.
	Report function (Serial printer output)	×	● Ver1.105K or later	●	
	Report function (PictBridge printer output)	×	● Ver1.105K or later New function	● New function	
	Sound Output function	●	●	●	-
	Gateway function (Server function, client function)	●	●	●	-
	Gateway function (Mail send function)	●	●	●	-
	Gateway function (FTP server function)	●	●	●	-
	Gateway function (File transfer (FTP client) function)	×	● New function	● New function	[New function of GOT2000] • This function enables you to write files to an external FTP server by using the GOT as an FTP client.
	Gateway function File transfer function (GOT internal transfer)	×	● Ver1.155M or later New function	● Ver1.155M or later New function	[New function of GOT2000] • This function copies or moves a file in each drive of the GOT to another drive or folder.
	MES interface function	×	● Ver1.108N or later New function	● New function	[New function of GOT2000] • This function sends SQL statements from the GOT to the database of the server personal computer connected by Ethernet to write or read device values of the GOT to or from the database and to set values in the GOT devices.
	Wireless LAN function	×	● Ver1.105K or later New function	*1 Ver1.105K or later New function	[New function of GOT2000] • This function enables the GOT to operate as a station or wireless LAN access point.
	USB Mouse, USB Keyboard function	×	● New function	● New function	[New function of GOT2000] • This function is used by connecting a USB mouse and USB keyboard to the USB interface (host) of the GOT directly.
	GOT Mobile function	×	● Ver1.144A or later New function	● Ver1.144A or later New function	[New function of GOT2000] • The function enables you to monitor a controller through the GOT from an information device, such as a tablet.
GOT function	Base screen	●	●	●	-
	Overlap window	●	●	●	[New function of GOT2000] • Can be closed automatically when the base screen is switched. • The overlap order of objects in the layers is kept. • Window position can be adjusted by swipe operation. • The number of overlap windows that can be displayed simultaneously changed from two to five.

Item	Function name in GOT-A900	GOT-A900	GT27	GT25	Precautions for GOT-A900-to-GOT2000 replacement and new function
GOT function	Superimpose window	●	●	●	[New function of GOT2000] • Two superimpose windows can be displayed simultaneously.
	Dialog window	×	● New function	● New function	[New function of GOT2000] • You can create new system messages and replace system messages displayed by the GOT by creating and using dialog windows.
	Mobile Screen	×	● Ver1.144A or later New function	● Ver1.144A or later New function	[New function of GOT2000] The screen is displayed on the information device such as a tablet that operates as the client of the GOT Mobile function with a browser.
	Key window	●	●	●	[New function of GOT2000] • [Moves to the surroundings of the object] is added to the key window position correction. • The cursor can be hidden when the object ID at the move destination does not exist. • The objects that can be used on the overlap window can be used on the key window. • Window position can be adjusted by swipe operation.
	Language Switching	×	● New function	● New function	[New function of GOT2000] • The interface language of the GOT can be switched.
	System information	●	●	●	-
	Operator authentication	×	● New function	● New function	[New function of GOT2000] • This function allows operator authentication based on operator management information that is set for per operator.
	Security	×	● New function	● New function	[Precautions] • This function is replaced with "Security level authentication".
	Operation Log	×	● New function	● New function	[New function of GOT2000] • This function stores the history of operations performed on the GOT.
	Startup Logo	×	● New function	● New function	[New function of GOT2000] • This function displays an image in the BMP or JPEG format as the startup logo at GOT startup.
	KANA-KANJI Conversion	●	● Ver 1.105K or later	●	-
	Transparent	●	●	●	[Precautions] • This function is replaced with "FA transparent".
	SoftGOT-GOT Link	×	● New function	● New function	[New function of GOT2000] • This function connects GT SoftGOT2000 and the GOT by Ethernet to synchronize project data and resource data between GT SoftGOT2000 and the GOT.
	Backup/Restore	×	● New function	● New function	[New function of GOT2000] • This function stores (backs up) setting information (including sequence programs, parameters, and setting values) of a controller connected with the GOT in the data storage mounted on the GOT. This function also restores the stored setting to the controller as needed. [Precautions] • GT Designer3 Version1.108N or later supports the backup/restore function for robot controllers.
	Multi-channel function	×	● New function	● New function	[New function of GOT2000] • This function writes multiple communication drivers to enable one GOT to monitor up to four controllers (four channels).

Item	Function name in GOT-A900	GOT-A900	GT27	GT25	Precautions for GOT-A900-to-GOT2000 replacement and new function
GOT function	Station No. Switching	●	●	●	-
	GOT Network Interaction	×	● Ver1.144A or later New function	● Ver1.144A or later New function	[New function of GOT2000] The function controls simultaneous operations of devices on the same network by the exclusive control of the authorization.
	Screen gesture function	×	● New function	×	[New function of GOT2000] • The screen gesture function can be used.
	Object gesture function	×	● New function	×	[New function of GOT2000] • The object gesture function can be used.
	IP filter function	×	● Ver1.122C or later New function	● Ver1.122C or later New function	[New function of GOT2000] The function allows or blocks access via an Ethernet network from IP addresses specified in the filtering list.
	File Manager	×	● Ver1.150G or later New function	● Ver1.150G or later New function	[New function of GOT2000] The folders and files in the public folder are viewed or copied.
	Vertical display	×	● Ver1.117X or later New function	● Ver1.117X or later New function	[New function of GOT2000] • GOT2000 supports the vertical display.
	2-point press (multi-touch)	●	●	×	[Precautions] • There are precautions on the arrangement of switches for 2-point press. For the details, refer to Section 3.1.7.
Debug function	System monitor	●	●	●	[Precautions] • Replaced with [Device monitor]. • The display method for device comments is the same as the one for the sequence program monitor. [New function of GOT2000] • The screen can be divided into up to 4 sections.
	A ladder monitor	●	×	×	[Precautions] • Not supported by GOT2000. • The special function switch [Ladder Monitor]] is replaced with [Sequence program monitor (Ladder)], but ACPU is not supported.

	Q/QnA ladder monitor	●	●	●	[Precautions]
					• When QnACPU is connected
					  • Not supported by GOT2000.
					  • The special function switch [Ladder Monitor] is replaced with [Sequence program monitor (Ladder)], but QnACPU is not supported.
					• When QCPU or LCPU is connected
					  • Replaced with [Sequence Program Monitor].
					• Prepare a data storage (such as an SD card and a USB memory).

	Ladder editor	×			[Precautions] • Replaced with [Sequence program monitor (Ladder)]. Refer to Section 3.3.4(6).

Item	Function name in GOT-A900	GOT-A900	GT27	GT25	Precautions for GOT-A900-to-GOT2000 replacement and new function
Debug function	Sequence program monitor (SFC)	×	● New function	● New function	[New function of GOT2000] • The sequence program monitor (SFC) can be used. [Precautions] • GT Designer3 Version1.103H or later version supports the sequence program monitor (SFC) function for QnUDVCPU.
	Network monitor	●	●	●	[New function of GOT2000] • The motion SFC monitor can be used.
	CC-Link IE Field Network diagnostics	×	● Ver1.165X or later New function	● Ver1.165X or later New function	[New function of GOT2000] Monitors and diagnoses the network status of CC-Link IE Field Network.
	Special function monitor	●	●	●	[Precautions] • This function is replaced with "intelligent module monitor".
	Drive Recorder	×	● Ver1.155M or later New function	● Ver1.155M or later New function	[New function of GOT2000] The function reads the data prior and subsequent to an alarm (including motor current values and position commands) from a servo amplifier to the GOT, and displays the waveform or data list.
	Servo amplifier monitor	●	●	●	-
	Motion monitor	●	●	●	[Precautions] • This function is replaced with "Q motion monitor".
	R motion monitor	×	● Ver1.117X or later New function	● Ver1.117X or later New function	[New function of GOT2000] • The R motion monitor can be used.
	Motion SFC monitor	×	● New function	● New function	[New function of GOT2000] • The motion SFC monitor can be used. [Precautions] • GT Designer3 Version1.103H or later version supports the motion SFC monitor function for Q170MSCPU(-S1).
	CNC monitor 2	×	● Ver1.155M or later New function	*1 Ver1.155M or later New function	[New function of GOT2000] This function enables you to monitor the information required for the operation, setup, diagnosis, and maintenance of the CNC C80 connected to the GOT. Setting and inputting or outputting the data of the CNC C80 can also be performed.
	CNC monitor	●	● Ver1.117X or later	● Ver1.122C or later	[Precautions] • The special function switch [CNC Monitor] is replaced with [Utility].
	CNC data I/O	×	● Ver1.117X or later New function	● Ver1.122C or later New function	[New function of GOT2000] • The CNC data I/O can be used.
	CNC machining program edit	×	● Ver1.117X or later New function	● Ver1.122C or later New function	[New function of GOT2000] • The CNC machining program edit can be used.
	Log Viewer	×	● New function	● New function	[New function of GOT2000] • The log viewer can be used.

Item	Function name in GOT-A900	GOT-A900	GT27	GT25	Precautions for GOT-A900-to-GOT2000 replacement and new function
Debug function	List editor for A	●	×	×	[Precautions] • The special function switch [List Editor] is replaced with [Utility].
	List editor for FX	×	● New function	● New function	[New function of GOT2000] • The list editor for FX can be used.
	FX ladder monitor	●	●	●	-
	iQSS utility	×	● Ver1.126G or later New function	● Ver1.126G or later New function	[New function of GOT2000] By storing the profile data of the iQSS-compatible device to a data storage and installing it on the GOT, the information of the selected device is displayed. The selected iQSS-compatible device can also be set up, operated, and maintained.
	System Launcher	×	● Ver1.126G or later New function	● Ver1.126G or later New function	[New function of GOT2000] The following functions are provided for the devices connected to the GOT. • Displaying the status of a module • Starting the extended functions applicable to a module • Replacing a module online
	System Launcher (Servo Network)	×	● Ver1.175H or later New function	● Ver1.175H or later New function	[New function of GOT2000] The system launcher (servo network) can be used when the system launcher is in use and has the following functions for the motion controller CPU connected to the GOT and the servo amplifier connected to the simple motion module. • Displaying the configuration of the servo system controller network • Displaying the system configuration of a module • Displaying the error details occurred in a servo amplifier • Saving the information file of the servo system controller network
	MELSEC-L troubleshooting	×	● New function	● New function	[New function of GOT2000] • The MELSEC-L troubleshooting can be used.

2) Recipe files (CSV/Unicode text) of the recipe and advanced recipe
The format of the recipe files (CSV/Unicode text) differs between the GOT-A900 series and GOT2000 series. When using a recipe file (CSV/Unicode text) for the GOT-A900 series in the GOT2000 series, change the format into the one for the GOT2000 series.

1) Convert the project data into the GOT2000 series project data, and execute the recipe.
For the method of converting into the GOT2000 series project data, refer to Section 3.3.
2) A recipe file for the GOT2000 series (CSV/Unicode text) is created in the specified drive.
3) Copy the device values in the recipe file for the GOT-A900 series onto the corresponding section in the recipe file for the GOT2000 series.

- GOT-A900 recipe file

:DATE	2014/1/31 12:38
:GROUP No.	1
:GROUP NAME	RECIPE1
:DEVICE	8
ITEM NAME	VALUE
	234
	421
	52
	-23
	534
	-3
	32
	0

Copy and paste these values onto the GOT2000 recipe file.

- GOT2000 recipe file (number of records: 1)

:GT2K_RECIPE	0				
:RECIPE_ID	1				
:RECIPE_NAME	RECIPE1				
:DEVICE_NUM	8				
:RECORD_NUM	1				
:DATE_ORDER	YYYY/MM/DD hh:mm:ss				
:LOCAL_TIME	GMT+09:00				
:TIME_INF_ORDER	L				
	DEV_COMMENT	DEV_TYPE	DISP_TYPE	DEV_SIZE	1
:RECORD_NAME					
:RECORD_ATTR					
:UPDATE					2014/1/31 12:38
1		BIN16	DEC		234
2		BIN16	DEC	1	421
3		BIN16	DEC	1	52
4		BIN16	DEC	1	-23
5		BIN16	DEC	1	534
6		BIN16	DEC	1	-3
7		BIN16	DEC	1	32
8		BIN16	DEC	1	0

3.3 Screen design software specifications

The project data used in the GOT-A900 series can be converted into the project data for the GOT2000 series, and can be used as-is.

[Precautions]
This explanation is based on GT Works3 Version1.117X.
Once the project data is converted for the GOT2000 series, it cannot be converted back into the project data for the GOT-A900 series.

3.3.1 Preparation before converting the project data

Install the following software into the personal computer in advance.

(1) When reading the project data for the GOT-A900 series from a GOT
Install GT Designer2 Version2, GT Designer2 Classic, or Data Transfer Tool.
* Not necessary if any project data already exists in the personal computer.

(2) When converting the project data for the GOT2000 series
Install GT Designer3 (GOT1000) or GT Designer3 (GOT2000) (GT Works3 Version1.117X or later).

For how to install the software, refer to the following.
- GT Works3 Installation Instructions (DVD version) (BCN-P5999-0066)
If your version is old, update the software to the latest version.

3.3.2 Procedure for the project data conversion

1) When the data exists on the personal computer, check the storage location of the project data for the GOT-A900 series.
When no data exists on the personal computer, connect the personal computer to the GOT-A900 series, and upload and save the project data using GT Designer2 Version2, GT Designer2 Classic, or Data Transfer Tool.

2) Open the project data of procedure 1) with GT Designer3 (GOT1000), convert the data to GOT2000 data, and save the data.

3) Select [Common]-[GOT Type Setting], select [GOT2000] in [Series] of [GOT Type], and press [OK].

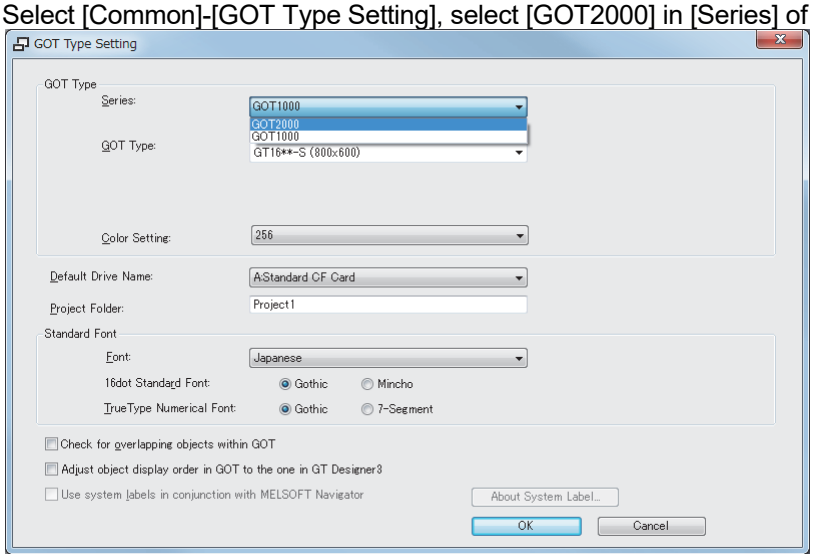

4) Select the model of GOT2000 after replacement, and press [OK].

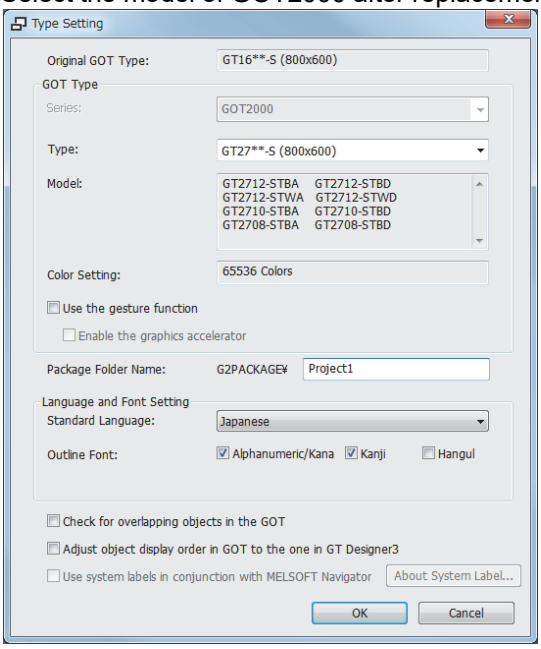

5) The project data is converted for the GOT2000 series, and GT Designer3 (GOT2000) starts.
The conversion result can be checked in the [Output] window.

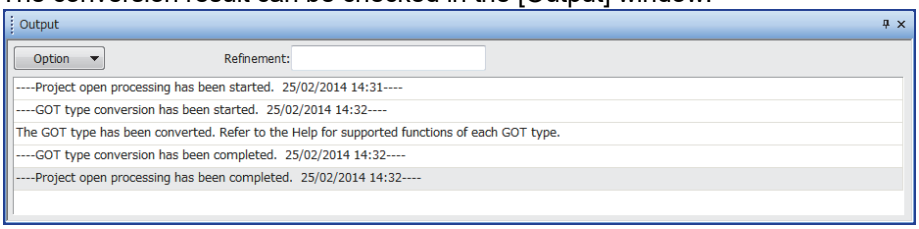

3.3.3 Screen design functions that are not supported

The following screen design functions are not supported.

Item	Screen design function	GOT-A900	GT27	GT25	Precautions for GOT-A900-to-GOT2000 replacement and new function
Screen design software	Communication between the screen design software and GOT (modem, RS-232)	●	×	×	[Precautions] Modem or RS-232 connection between the screen design software and GOT is not supported. Use USB or Ethernet connection.

[Precautions]
Note that the settings of the functions that are not supported in the GOT2000 series are deleted when the GOT-A900 series project data is converted for the GOT2000 series. For compatibility of the functions between the GOT2000 series and GOT-A900 series, refer to Section 3.2.

3.3.4 Other major changes

Major changes in the screen design function are as follows.

(1) Name of the OS (standard monitor OS, extended function OS)
The name is changed as follows. In the GOT2000 series, the data necessary for GOT operations including system applications, project data, and communication drivers are collectively called "package data".

Name in GOT-A900	Name in GOT2000
OS	System application
Standard monitor OS	Standard system application
Extended function OS	Advanced system application

(2) Drive configuration of the GOT
The name and type (media) of drives of GT27 and GT25 are as follows.

Drive name	Drive type
Drive A	Standard SD card
Drive B	Rear-face USB
Drive C	Built-in flash memory
Drive E	Front-face USB (except while model)
Drive F	USB (assigned in order of connection)
Drive G	USB (assigned in order of connection)
Drive X (Current drive)	A drive that is running a project. (Indicates A drive when the project is started from C drive.)

(3) Storage locations of data
The storage locations of data of GT27 and GT25 are as follows.

Data type	Storage drive	
OS	Package data	A, B, C, E, F, G drive * Project data, system application, and special data must be stored in the same drive. * Only A drive can be used for direct startup from a memory card.
Project data		
Special Data		
Resource data	A, B, C, E, F, G drive	

(4) Controller settings
When the following communication drivers are used in the screen design software for the GOT-A900 series, the settings will be deleted. Set the settings again in the screen design software for the GOT2000 series.

Manufacturer	Type	Driver	Remarks
MITSUBISHI	MELSEC-QnA/Q, MELDAS C6*	MELSECNET/10	The settings are deleted. Set the settings again in the screen design software for the GOT2000 series. MELSECNET/H (NET/10 mode) is used in the GOT2000 series
		CC-Link(ID)	The settings are deleted. Set the settings again in the screen design software for the GOT2000 series.

(5) Settings of the utility call key
The utility call method differs from that of the GOT-A900 series. Check and configure the method in GT Designer3 (GOT2000) if necessary.

Setting in GOT-A900	Precautions in GOT-A900-to-GOT2000 replacement
Two-point setting	Only one point is accepted, and the following priority is applied. Upper left → Upper right → Lower left → Lower right

Setting in the screen design software for the GOT2000 series "GT Designer3 (GOT2000)"
[Common]-[GOT Setup]-[Basic Setting]-[Update the setting of operation/utility call key]

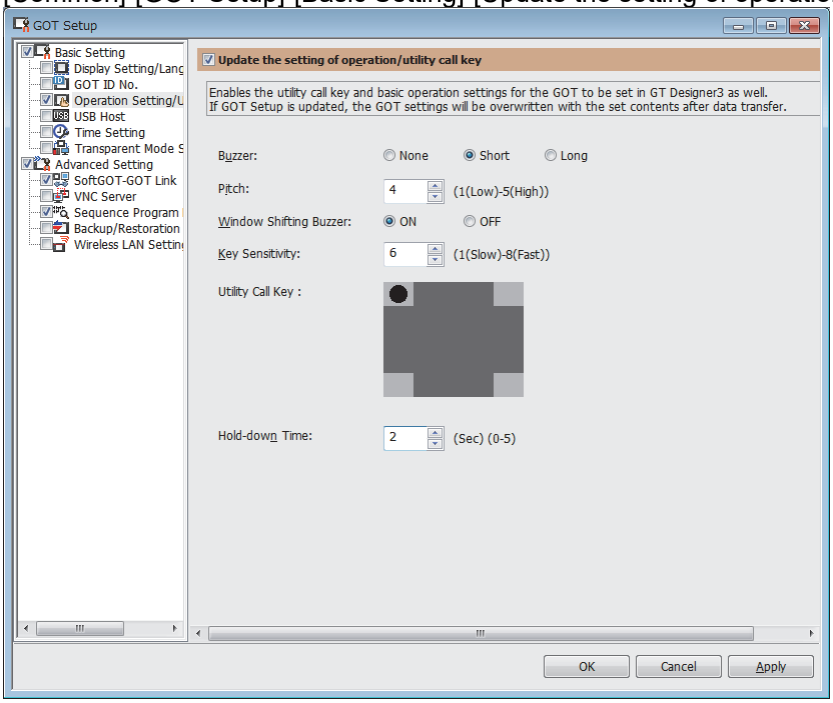

(6) Offset value setting
When offsets are used and the following conditions are satisfied, the values stored in the offset devices must be changed.

1) Conditions requiring changes
• Controller: OMRON PLC
• Connection type: Serial connection or Ethernet connection
• Offset-target device: Bit devices (.., LR, HR, WR, and AR)

2) Change method
Values stored in the offset devices can be calculated using the following expression. Store the result in the offset devices.
Offset value for the GOT2000 series = (Offset value for the GOT-A900 series) / 100 × 16 + (Offset value for the GOT-A900 series) % 100
* % means the division to calculate a remainder. (For "a % b", a remainder after "a" is divided by "b" is returned.)

Example) The following shows an example of offset values for the device LR00000.

Object setting in the GOT	Device number after the offset is added	Offset value for the GOT-A900 series (decimal)	Offset value for the GOT2000 series (decimal) (calculated by the expression)
LR00000	LR00010	10	10
	LR00100	100	16
	LR00310	310	58
	LR010000	10000	1600

3) Difference in the specifications of the offsets of bit devices (.., LR, HR, WR, and AR)
In the GOT-A900 series, values must be set corresponding to the device notation (channel number and bit position). In the GOT2000 series, values disregarding channel numbers are set while bit devices are considered continuous.

Example) The following shows an example for the GOT-A900 series.

Offset	Device indicated by the monitor device
Offset value = 0 (no offset)	LR00000
Offset value = 1	LR00001
Offset value = 15	LR00015
Offset value = 16	322 (range error)
Offset value = 100	LR00100
Offset value = 115	LR00115

*1 The notation of bit devices is as follows (example of LR)

*2 The lower two digits of the offset value are applied as an offset value for the bit position in *1. The valid value is 0 to 15. If 16 to 99 is set, the system alarm 322 "Dedicated device is out of range. Confirm device range." is displayed.
The digits excluding the lower two digits of the offset value are applied as an offset value for the channel number.

Example) The following shows an example for the GOT2000 series.

Offset	Device indicated by the monitor device
Offset value = 0 (no offset)	LR00000
Offset value =1	LR00001
Offset value =15	LR00015
Offset value =16	LR00100
Offset value =100	LR00604
Offset value =115	LR00703

*1 The notation of devices, .., LR, HR, WR, and AR, is as follows (example of LR):

LR □□□ △△
- △△: Bit position
- □□□: Channel number

*2 As the offset value of the bit position is increased by 16, the channel number increases by 1.

3.4 SoftGOT specifications

Most of the GT SoftGOT2 functions can be used in GT SoftGOT2000 as-is; however, some functions are not supported or are integrated, or their names have been changed. Refer to "Table 3-10 GOT2000 function comparison table" and "Table 3-12 GT SoftGOT2000 function comparison table".

Table 3-12 GT SoftGOT2000 function comparison table

Item	Function	GT SoftGOT2	GT SoftGOT2000	Precautions for GT SoftGOT2-to-GT SoftGOT2000 replacement and new function
SoftGOT	License key	•	•	[Precautions] Purchase separately since the license key is different. No license key is provided for the parallel port.

REVISIONS

Version	Print date	Revision
*	March 2014	- First edition (Japanese only) (Print date indicates the date that the Japanese version was issued.)
A	December 2014	- GT2512-STBA and GT2512-STBD has been supported. - The GT25 model has supported the CNC monitor, CNC data I/O, and CNC machining program edit. - The GT27 and GT25 models have supported buffer memory unit number switching. - "Section 3.1.6 Precautions for arrangement of a 2-point press switch" has been revised.
B	December 2018	- GT2705, GT2507-WTBD, GT2507-WTSD, and GT2505 are supported. - Writing errors have been corrected.
C	February 2019	- Writing errors have been corrected.
D	August 2019	- Writing errors have been corrected.
E	July 2021	- Writing errors have been corrected.
F	September 2026	- Writing errors have been corrected.