MITSUBISHI ELECTRIC

TECHNICAL BULLETIN

[Issue No.] GOT-A-0101-D

[Title] Withdrawal of the ATEX Directive and KCs Certification for the GOT2000 Series

[Date of Issue] September 2016 (Ver. D: September 2026)

[Relevant Models] GOT2000 Series

Thank you for your continued support of Mitsubishi Electric Graphic Operation Terminal (GOT).
The GOT2000 series has obtained the ATEX Directive certification and KCs Certification; however, these certifications will be withdrawn.

Contents

1. ATEX Directive and KCs certification 2
   1.1 ATEX Directive 2
   1.2 KCs certification 2
2. Applicable models and certification expiration dates 2
3. Changes due to the withdrawal of the certifications 3
   3.1 Rating plate 3
   3.2 Warning plates 3
   3.3 Supplementary Description 4
4. Options required for compliance 4
   4.1 Special fittings 4
   4.2 Protective sheet 4
5. Use environment 5
   5.1 ATEX Directive 5
   5.2 KCs certification 6
6. Restrictions 7
   6.1 Installation location 7
   6.2 Control panel on which the target GOT is installed 7
   6.3 Communication units and option units 7
   6.4 Startup 7
7. Installation and removal procedures 8
   7.1 Installing the GOT 8
   7.2 Removing the GOT 9
   7.3 Attaching the protective sheet 10

REVISIONS 11

MITSUBISHI ELECTRIC CORPORATION

HEAD OFFICE: TOKYO BLDG., 2-7-3, MARUNOUCHI, CHIYODA-KU, TOKYO 100-8310, JAPAN
NAGOYA WORKS: 1-14, YADA-MINAMI 5-CHOME, HIGASHI-KU, NAGOYA 461-8670, JAPAN

1. ATEX Directive and KCs certification

1.1 ATEX Directive

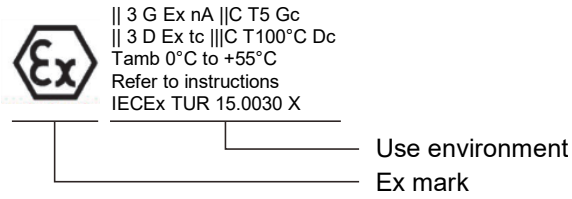

To use electric equipment intended for use in explosive atmospheres in the EU member states, the equipment must comply with the ATEX Directive. The equipment compliant with the ATEX Directive must bear a specified Ex mark and use environment. For the use environment, refer to the following.

➟ 4.1 ATEX Directive

1.2 KCs certification

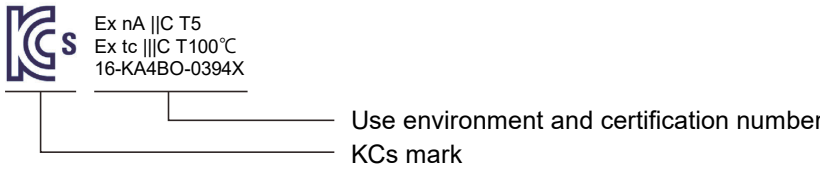

The Korea Testing Laboratory (KTL) mandates that applicable equipment receives KCs certification and bear a specified mark. The applicable equipment must bear a specified KCs mark, use environment, and certification number. For the use environment and certification number, refer to the following.

➟ 4.2 KCs certification

2. Applicable models and certification expiration dates

The following shows the applicable models and certification expiration dates.

Type	Model	Screen size	Power supply type	Compliance schedule	Certification expiration dates
GT27 white model	GT2712-STWD	12.1"	24 V DC	September 2021 or later	September 8, 2026
	GT2710-VTWD	10.4"			
GT25 white model	GT2510-VTWD	10.4"			
	GT2508-VTWD	8.4"			

Products manufactured on or before September 7, 2026 can continue to be used as ATEX- and KC-compliant products. GOTs with the ATEX directive and KCs mark on the rating plate comply with these standards.
There may be cases where both the former and new products exist in the distribution stage.

3. Changes due to the withdrawal of the certifications

3.1 Rating plate

The ATEX Directive mark and KCs mark will be removed.

Items to be removed

3.2 Warning plates

Two warning plates will be removed.

12.1"	10.4"	8.4"
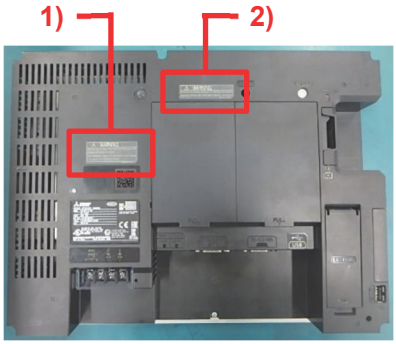	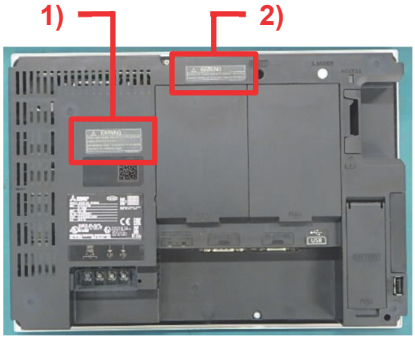	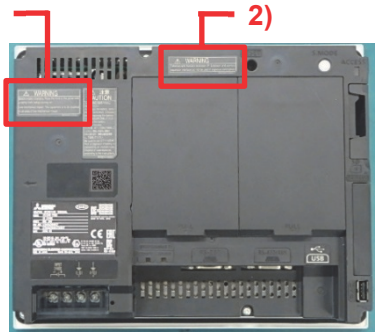

1) The warning plate about static electricity and low mechanical impact will be removed.

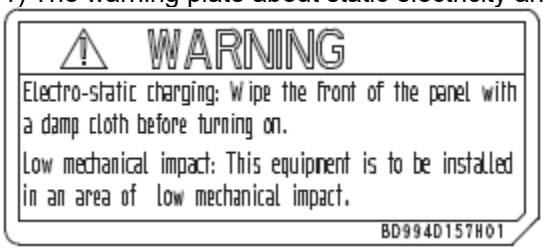

2) The warning plate about the restrictions on the extension interface will be removed.

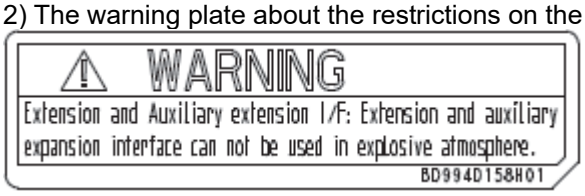

3.3 Supplementary Description
The following Supplementary Description provided with the GOT will be removed.

➟ GOT2000 Series Supplementary Description (Compliance with the ATEX Directive) (IB-0800551ENG)
GOT2000 시리즈 보충 설명 (KCs 지침 준수) (IB-0800558KOR)

4. Options required for compliance
To use the target models in compliance with the ATEX Directive or KCs certification requirements, the following options are required separately. For purchasing the options, contact your local sales office.

4.1 Special fittings
The following shows the special fitting models and applicable GOTs.
The special fittings are used together with the standard fittings (included with the GOT) to fix the GOT.

Model	Applicable screen size	Applicable GOT
GT25-12FIT-EXS	12.1"	GT2712-STWD
GT25-10FIT-EXS	10.4"	GT2710-VTWD
		GT2510-VTWD

* GT2508-VTWD does not require the special fittings.

To identify the models with the holes for attaching the fittings, check the hardware version and the date of manufacture.
For the details, refer to the following.

➟ Adding the Holes for Attaching the Fittings to the GT27 and GT25 White Models (GOT-A-0099)

4.2 Protective sheet
The following shows the protective sheet models and applicable GOTs.

Model	Applicable screen size	Applicable GOT
GT25-12PSCC-UC	12.1"	GT2712-STWD
GT25-10PSCC-UC	10.4"	GT2710-VTWD
		GT2510-VTWD
GT25-08PSCC-UC	8.4"	GT2508-VTWD

For information on how to install the special fittings and protective sheet, refer to the following.

➟ 7. Installation and removal procedures

5. Use environment

5.1 ATEX Directive
The ATEX-compliant GOT is usable in the following environments.
• Gas: zone 2, dust: zone 22

The following shows the details of the applicable environments.
■ Gas environment

|| 3G Ex nA ||C T5 Gc

- Gc: Equipment protection level (Non-sparking equipment during normal operation)
- T5: Temperature class (Highest surface temperature: 100°C)
- ||C: Gas atmosphere (Typical gas: hydrogen)
- nA: Type of protection (Non-sparking equipment)
- Ex: Explosion proof
- 3G: Product category (Zone 2, gases/vapors)
- ||: Product group (non-mining)

■ Dust environment

|| 3D Ex tc |||C T100℃ Dc

- Dc: Equipment protection level (Dust ignition protection by enclosure)
- T100℃: Highest surface temperature 100°C
- |||C: Dust atmosphere (Conductive dust)
- tc: Type of protection (Dust ignition protection)
- Ex: Explosion proof
- 3D: Product category (Zone 22, dusts)
- ||: Product group (non-mining)

■ Range of ambient operating temperature

Tamb 0°C to +55°C

- Operating ambient temperature ranging from 0°C to 55°C

The following shows the IECEx certification number.
• IECEx TUR 15.0030 X

5.2 KCs certification
The KCs-certified GOT is usable in the following environments.
• Gas or dust environments

The following shows the details of the applicable environments.
■ Gas environment

Ex nA ||C T5
- T5: Temperature class (Highest surface temperature: 100°C)
- ||C: Gas atmosphere (Typical gas: hydrogen)
- nA: Type of protection (Non-sparking equipment)
- Ex: Explosion proof

■ Dust environment

Ex tc |||C T100℃
- T100℃: Highest surface temperature 100°C
- |||C: Dust atmosphere (Conductive dust)
- tc: Type of protection (Dust ignition protection)
- Ex: Explosion proof

The following shows the certification number of the GOTs compliant with the KCs certification.
• 16-KA4BO-0394X

6. Restrictions

The following explains the restrictions on using the target GOTs in compliance with the ATEX Directive or KCs certification requirements.

6.1 Installation location

Use GOTs under either of the following conditions so that the GOTs do not receive a direct impact from peripheral equipment.

- A place where only authorized people have access
- A place surrounded by guards to avoid direct impacts

6.2 Control panel on which the target GOT is installed

The target GOT must be installed on an IP65-rated control panel.

6.3 Communication units and option units

Communication units and option units are not usable. If you use any of them, the target GOT does not comply with the relevant standards.

6.4 Startup

Before turning on the GOT, wipe its front panel with a damp cloth each time.

7. Installation and removal procedures

7.1 Installing the GOT

To install the 12.1" or 10.4" GOT on the control panel, use both the fittings included with the GOT and the special fittings sold separately.
The 8.4" GOT does not require the special fittings.

The following shows the product configuration of the special fittings.

Model	Product	Quantity	Applicable screen size	Applicable GOT
GT25-12FIT-EXS	Special fitting A (BD808D084)	3	12.1"	GT2712-STWD
	Special fitting B (BD808D191)	1		
GT25-10FIT-EXS	Special fitting A (BD808D084)	2	10.4"	GT2710-VTWD
				GT2510-VTWD

For the panel cutting dimensions, refer to the GOT2000 Series User's Manual (Hardware).
The following shows an example of the horizontal installation.
For the vertical installation, make sure that the vertical installation arrow printed on the GOT rear face points upward.

Install the GOT in the following procedure.

1) Insert the GOT into the panel opening.

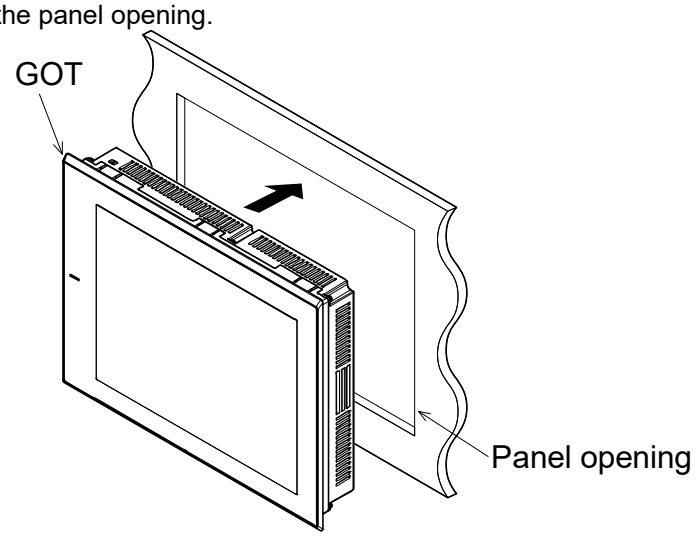

2) Align the fittings with the installation holes on the GOT, and install the fittings.
Fasten the fittings in the following order.
· For GT2712-STWD
  Standard fittings → special fitting A → special fitting B
· For GT2710-VTWD or GT2510-VTWD
  Standard fittings → special fitting A
Use a Phillips-head screwdriver No. 2 to tighten the mounting screws within the specified torque range as shown below.
· For standard fittings: 0.36 N•m to 0.48 N•m
· For special fittings A and B: 0.42 N•m to 0.48 N•m
Overtightening may cause the GOT front panel to deform, making wrinkles on the protective sheet.

■ GT2712-STWD (8 fittings)

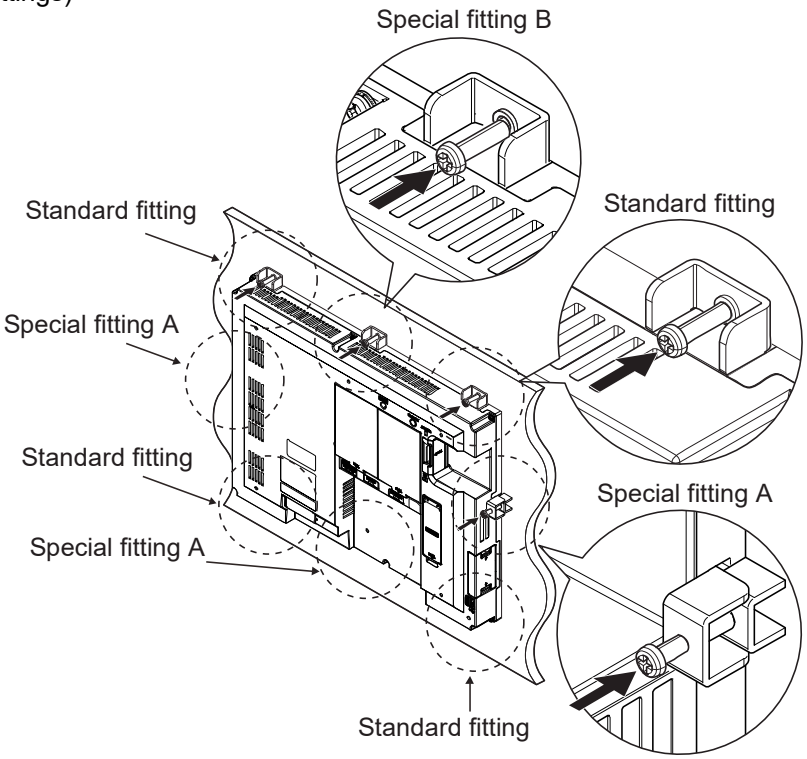

■ GT2710-VTWD or GT2510-VTWD (6 fittings)

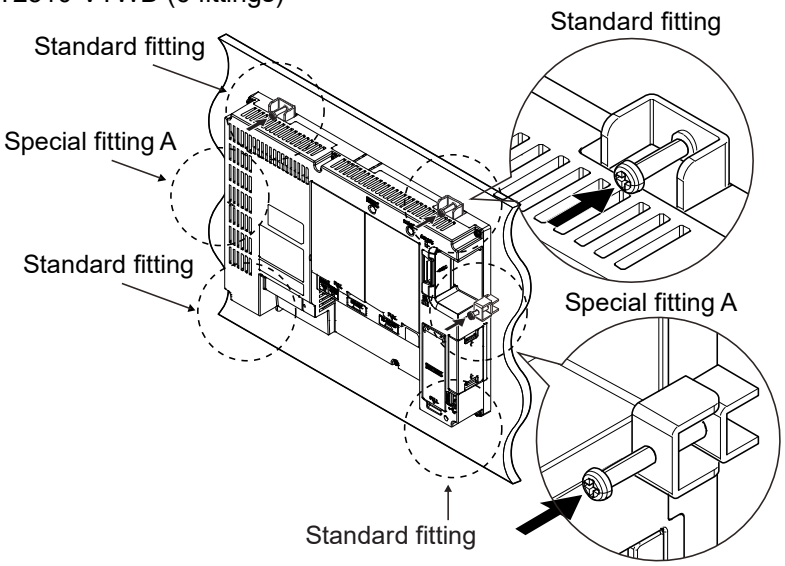

7.2 Removing the GOT

Remove the GOT in the reverse of the installation procedure.

7.3 Attaching the protective sheet

Attach an applicable protective sheet on the GOT front face as shown below.

Model	Applicable screen size	Applicable GOT
GT25-12PSCC-UC	12.1"	GT2712-STWD
GT25-10PSCC-UC	10.4"	GT2710-VTWD
		GT2510-VTWD
GT25-08PSCC-UC	8.4"	GT2508-VTWD

The following shows an example of attaching a protective sheet on GT2712-STWD.
Attach the protective sheet in the following procedure.

1) Position the protective sheet from the upper left of the GOT.

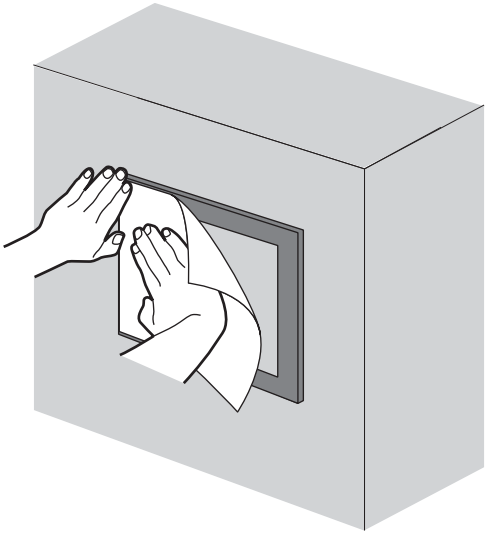

2) Attach the protective sheet from one direction gradually. Make sure to fit the protective sheet onto the GOT surface closely without leaving any air between them.
   Apply enough pressure to the adhesive part of the protective sheet.
   To ensure adequate adhesive strength, you are recommended to use the GOT about 24 hours later after the protective sheet is attached.

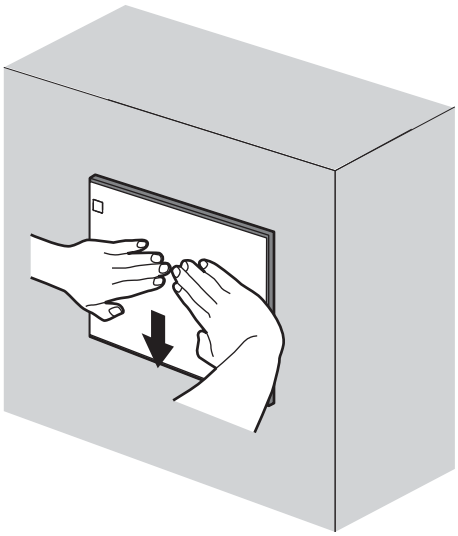

REVISIONS

Version	Print Date	Revision
*	September 2016	- First edition
A	December 2017	- The configuration table of the special fittings has been complemented.
B	September 2021	- A partial change has been made to the Ex marking to comply with EN IEC 60079-0:2018.
C	April 2026	- The content has been revised due to the withdrawal of the ATEX Directive certification and KCs Certification.
D	September 2026	- Updated the certification expiration dates in "2. Applicable models and certification expiration dates" and added explanatory text.