MITSUBISHI ELECTRIC

<DIPIPM>

SLIMDIP Series APPLICATION NOTE

SLIMDIP-S, -M, -L, -W, -X, -Z

Table of contents

CHAPTER 1 INTRODUCTION 2
- 1.1 Features of SLIMDIP 2
- 1.2 Functions 3
- 1.3 Target Applications 4
- 1.4 Product Line-up 4
- 1.5 The Differences between previous series and SLIMDIP 4

CHAPTER 2 SPECIFICATIONS AND CHARACTERISTICS 6
- 2.1 SLIMDIP Specifications 6
  - 2.1.1 Maximum Ratings 6
  - 2.1.2 Thermal Resistance 8
  - 2.1.3 Electric Characteristics and Recommended Conditions 9
  - 2.1.4 Mechanical Characteristics and Ratings 11
- 2.2 Protective Functions and Operating Sequence 12
  - 2.2.1 Short Circuit Protection 12
  - 2.2.2 Control Supply UV Protection 14
  - 2.2.3 OT Protection 16
  - 2.2.4 Temperature output function V_{OT} 17
- 2.3 Package Outlines 20
  - 2.3.1 Package outlines and PCB Through-hole Pattern 20
  - 2.3.2 Marking 22
  - 2.3.3 Terminal Description 24
- 2.4 Mounting Method 26
  - 2.4.1 Electric Spacing 26
  - 2.4.2 Mounting Method and Precautions 26
  - 2.4.3 Soldering Conditions 27

CHAPTER 3 SYSTEM APPLICATION GUIDANCE 28
- 3.1 Application Guidance 28
  - 3.1.1 System connection 28
  - 3.1.2 Interface Circuit (Direct Coupling Interface example for using one shunt resistor) 29
  - 3.1.3 Interface Circuit (Example of Opto-coupler Isolated Interface) 30
  - 3.1.4 External SC Protection Circuit with Using Three Shunt Resistors 31
  - 3.1.5 Circuits of Signal Input Terminals and Fo Terminal 31
  - 3.1.6 Snubber Circuit 33
  - 3.1.7 Recommended Wiring Method around Shunt Resistor 33
  - 3.1.8 Precaution for Wiring on PCB 35
  - 3.1.9 Parallel operation of DIPIPM 36
  - 3.1.10 SOA of SLIMDIP 36
  - 3.1.11 SCSOA 37
  - 3.1.12 Power Life Cycles 40
- 3.2 Power Loss and Thermal Dissipation Calculation 41
  - 3.2.1 Power Loss Calculation 41
  - 3.2.2 Temperature Rise Considerations and Calculation Example 43
  - 3.2.3 Installation of thermocouple 44
- 3.3 Noise and ESD Withstand Capability 45
  - 3.3.1 Evaluation Circuit of Noise Withstand Capability 45
  - 3.3.2 Countermeasures and Precautions 45
  - 3.3.3 Static Electricity Withstand Capability 46

CHAPTER 4 Bootstrap Circuit Operation 47
- 4.1 Bootstrap Circuit Operation 47
- 4.2 Bootstrap Supply Circuit Current at Switching State 48
- 4.3 Note for designing the bootstrap circuit 49
- 4.4 Initial charging in bootstrap circuit 50

CHAPTER 5 PACKAGE HANDLING 51
- 5.1 Packaging Specification 51
- 5.2 Handling Precautions 52

Publication Date: March 2025

MITSUBISHI ELECTRIC CORPORATION

CHAPTER 1 INTRODUCTION

1.1 Features of SLIMDIP

SLIMDIP is an ultra-small compact intelligent power module with transfer mold package suitable for larger mass production. Power chips, drive and protection circuits are integrated in the module, which make it easy for AC100-240V class low power motor inverter control.

SLIMDIP integrates reverse conducting IGBT (RC-IGBT), which applies the technology of our latest 7th generation IGBT, as a power chip so it can realize smaller package by reducing number of inner component as compared with our Super mini DIPIPM series that is de facto standard power module for inverterized home appliances. While its package size becomes smaller, it has same functions like various protection functions and bootstrap diodes for P-side driving supply.

By virtue of these features we believe SLIMDIP is especially suitable for low cost inverterized home appliances and can contribute to system cost reduction. Fig.1-1-1 and Fig.1-1-2 show the outline and internal cross-section structure respectively.

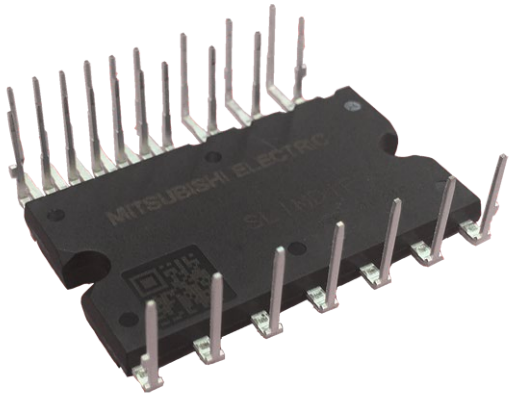

Fig.1-1-1 Package photograph

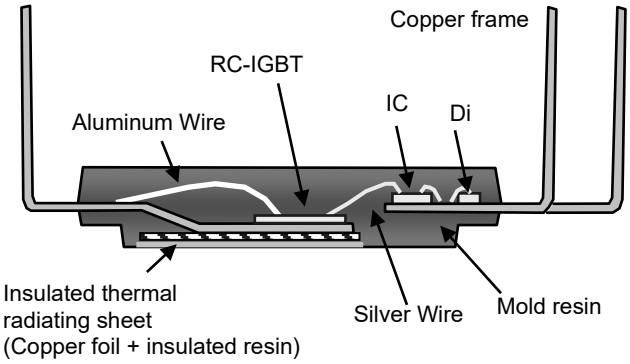

Fig.1-1-2 Internal cross-section structure

Main features of SLIMDIP are as below.

- *SLIMDIP integrates reverse conducting IGBT (RC-IGBT) which applies the technology of the latest 7th generation IGBT. It can decrease package size by 30% compared to Super mini DIPIPM series.*
- *SLIMDIP has same or more protection functions to the Super mini DIPIPM which is popular to Inverterized appliances. About temperature protection, SLIMDIP has both Over Temperature protection (OT) and temperature information output function (VOT).*
- *SLIMDIP adds negative electrode for P-side bootstrap supply while its package size becomes smaller. It is effective to make the pattern layout for PCB wiring easy.*
- *Its isolation voltage is boosted up to 2000Vrms,1min. from 1500Vrms,1min. of Super mini DIPIPM.*

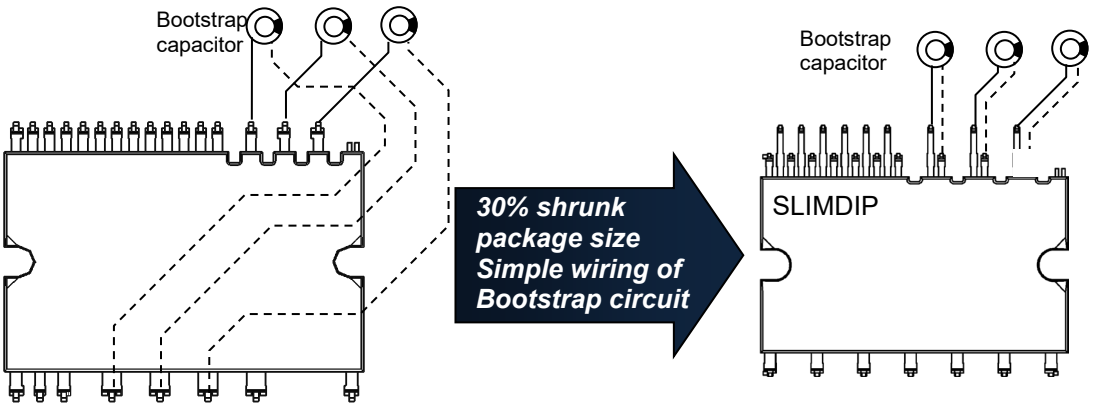

Fig.1-1-3 Differences against former product

About detailed differences, please refer Section 1.5.

1.2 Functions

SLIMDIP has following functions and inner block diagram as described in Fig.1-2-1.

- For P-side IGBTs:
  - Drive circuit;
  - High voltage level shift circuit;
  - Control supply under voltage (UV) lockout circuit (without fault signal output).
  - Built-in bootstrap diode (BSD) with current limiting resistor
- For N-side IGBTs:
  -Drive circuit;
  -Short circuit (SC) protection circuit (by inserting external shunt resistor into main current path)
  -Control supply under voltage (UV) lockout circuit (with fault signal output)
  -Over temperature (OT) protection by monitoring LVIC temperature.
  -Outputting LVIC temperature by analog signal

- Fault Signal Output
  -Corresponding to N-side IGBT SC, N-side UV and OT protection.
- IGBT Drive Supply
  -Single DC15V power supply (in the case of using bootstrap method)
- Control Input Interface
  -Schmitt-triggered 3V, 5V input compatible, high active logic.
- UL recognized
  -UL 1557 File E323585

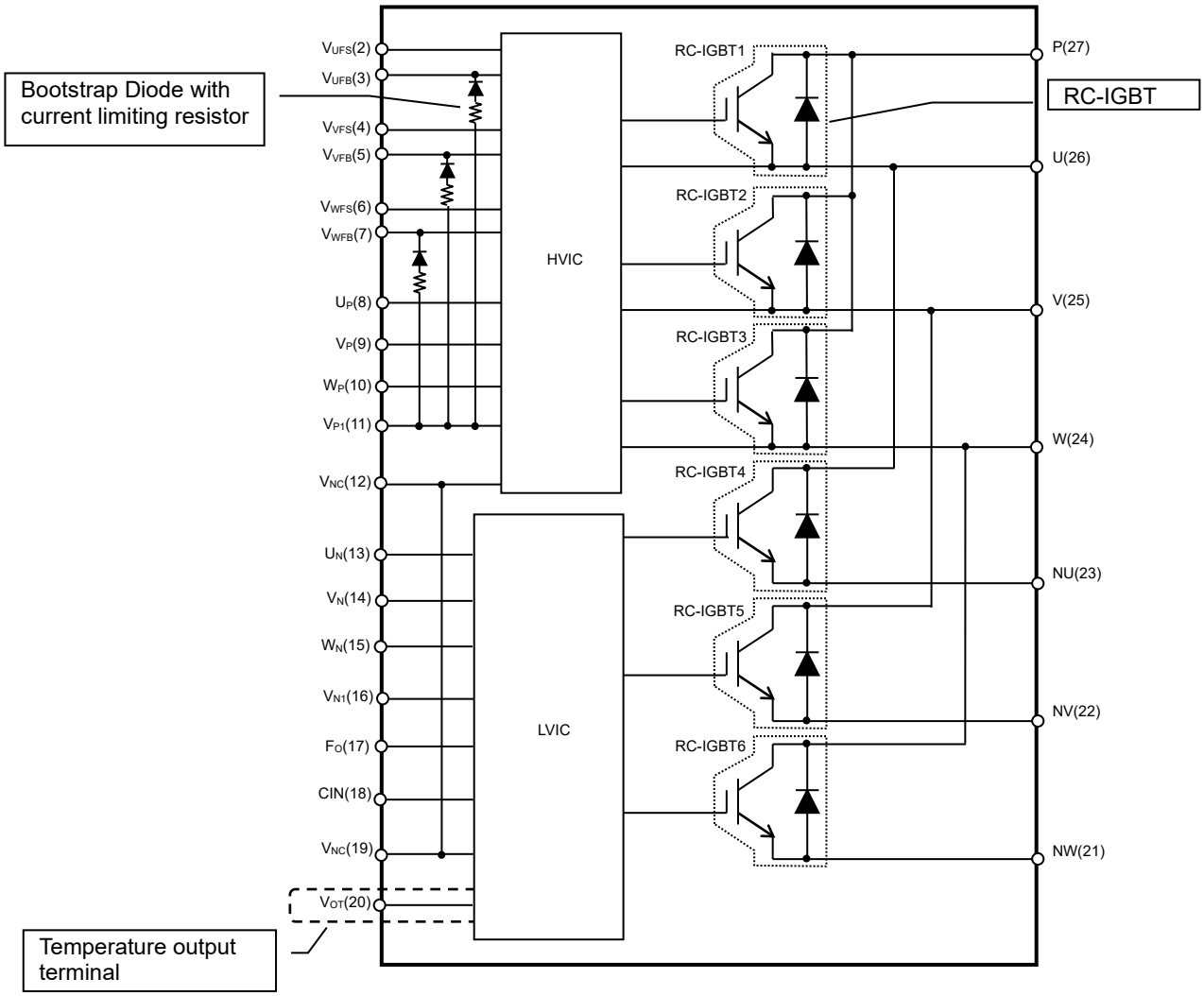

Fig.1-2-1 Inner block diagram

1.3 Target Applications

Motor drives for household electric appliances, such as air conditioners, washing machines, refrigerators
Low power industrial motor drive except automotive applications

1.4 Product Line-up

Table 1-4-1 SLIMDIP Line-up

Part Number	Suffix (Note 1)	Motor Rating (Note 2)
SLIMDIP-S	550/555	0.4kW/220VAC
SLIMDIP-M	500/505	0.4kW/220VAC
SLIMDIP-L	500/505	1.5kW/220VAC
SLIMDIP-W (Note 3)	500/505	1.5kW/220VAC
SLIMDIP-X	500/505	2.2kW/220VAC
SLIMDIP-Z	500/505	3.7kW/220VAC

Note 1: The trailing character of its suffix code represents its terminal type (terminal length). Terminal shape of SLIMDIP is common, control signal zigzag only, but it has two terminal length types; ‘5x0’ is normal terminal lengh type and ‘5x5’ is short terminal length type. Please refer outline figure in details. When choosing its terminal shape, please contact sales office.
Note 2: The motor ratings will change due to the operation condition.
Note 3: SLIMDIP-W is optimized for high speed switching ,compared with SLIMDIP-L(same rating).

1.5 The Differences between Super mini DIPIPM Ver.6 and SLIMDIP

SLIMDIP has some differences against Super mini DIPIPM Ver.6 (PSS**S92*6).
Main differences are described as below. For more detail, please refer the datasheet of each product.

Table 1-5-1 Differences of functions and outlines

Items	SLIMDIP	Super-Mini DIPIPM Ver.6	Ref.
	SLIMDIP-S, -M, -L, -W, -X, -Z	PSS**S92*6	
Built-in bootstrap diodes	Built-in with current limiting resistor	←	Section 4.2
Temperature protection	Both OT and VOT	OT or VOT	Section 2.2.4
N-side IGBT emitter terminal	Open	←	Section 2.3
Terminal shape	2 types: Normal and short terminal length with zigzag for control side	3 types: Long, short and zigzag for control side	Section 2.3

Table 1-5-2 Differences of absolute specifications

Items	Symbol	SLIMDIP	Super mini Ver.6
		SLIMDIP-S, -M, -L, -W, -X, -Z	PSS**S92*6
Collector-emitter voltage	V_{CES}	600V	600V
Each IGBT collector current (peak)	$\pm I_{CP}$	Two times the rated current	Three times the rated current
Junction temperature (Note 1)	T_j	-30~150°C	-30~150°C
Case temperature	T_C	-30~115°C	-30~100°C
Isolation voltage	V_{iso}	2000Vrms/min	1500Vrms/min

Table 1-5-3 Differences of main characteristics of control part and recommended conditions

Items	Symbol	SLIMDIP			Super mini Ver.6
		SLIMDIP-S, -L	SLIMDIP-M, -W, -X,	SLIMDIP-Z	5~15A
Circuit current for low voltage part (LVIC, HVIC)	I_D	3.1mA Note 1)	4.2mA Note 1)	4.2mA Note1)	2.8mA
Circuit current for floating part of HVIC	I_{DB}	0.1mA	←	←	←
Short circuit trip level	$V_{SC(ref)}$	0.455~0.505V	←	←	←
Trip voltage for HVIC floating control supply under voltage protection Note 2)	UV_{DBt}	7V~12V	**9V~12V**	**9V~12V**	7V~12V
Reset voltage for HVIC floating control supply under voltage protection Note 2)	UV_{DBr}	7V~12V	**9V~12V**	**9V~12V**	7V~12V
Trip voltage for LVIC control supply under voltage protection Note 2)	UV_{Dt}	10.3V~12.5V	←	←	←
Reset voltage for LVIC control supply under voltage protection Note 2)	UV_{Dr}	10.8V~13.0V	←	←	←
Trip level of over temperature protection	OTt	115~145℃	←	←	100~140℃
ON threshold voltage	$V_{th(on)}$	typ. 1.7V	←	←	typ. 2.1V
OFF threshold voltage	$V_{th(off)}$	typ. 1.3V	←	←	←
ON/OFF threshold hysteresis	$V_{(hys)}$	typ. 0.4V	←	←	typ. 0.65V
Bootstrap Di forward voltage @10mA	V_F	typ. 1.7V	←	typ. 1.3V	←
Arm-shoot-through blocking time	t_{dead}	min. 1.0μs	←	←	←
Allowable minimum input pulse width	PWIN(on)	min. 0.7μs	←	←	←
	PWIN(off)	min. 0.7μs	←	←	←

Note 1: at Vin=5V input
Note 2: SLIMDIP-S,-L : at Tj≦125℃, SLIMDIP-M, -W, -X, -Z: at Tj=25℃

For more detail and the other characteristics, please refer the datasheet of each product.

CHAPTER 2 SPECIFICATIONS AND CHARACTERISTICS

2.1 SLIMDIP Specifications

SLIMDIP specifications are described below by using SLIMDIP-L(15A/600V) as an example. Please refer to respective datasheets for the detailed description of other types.

2.1.1 Maximum Ratings

The maximum ratings of SLIMDIP-L are shown in Table 2-1-1.

Table 2-1-1 Maximum Ratings (T_j = 25°C, unless otherwise noted)

INVERTER PART

Symbol	Parameter	Condition	Ratings	Unit	
V_{CC}	Supply voltage	Applied between P-NU,NV,NW	450	V	
$V_{CC(surge)}$	Supply voltage (surge)	Applied between P-NU,NV,NW	500	V	(1)
V_{CES}	Collector-emitter voltage		600	V	(2)
$\pm I_C$	Each IGBT collector current	T_C= 25°C (Note1)	15	A	(3)
$\pm I_{CP}$	Each IGBT collector current (peak)	T_C= 25°C, less than 1ms	30	A	(4)
T_j	Junction temperature		-30~+150	°C	(5)

Note1: Pulse width and period are limited due to junction temperature.

CONTROL (PROTECTION) PART

Symbol	Parameter	Condition	Ratings	Unit
V_D	Control supply voltage	Applied between V_{P1}-V_{NC}, V_{N1}-V_{NC}	20	V
V_{DB}	Control supply voltage	Applied between V_{UFB}-V_{UFS}, V_{VFB}-V_{VFS}, V_{WFB}- V_{WFS}	20	V
V_{IN}	Input voltage	Applied between U_P, V_P, W_P, U_N, V_N, W_N-V_{NC}	-0.5~V_D+0.5	V
V_{FO}	Fault output supply voltage	Applied between F_O-V_{NC}	-0.5~V_D+0.5	V
I_{FO}	Fault output current	F_O terminal sink current	1	mA
V_{SC}	Current sensing input voltage	Applied between CIN-V_{NC}	-0.5~V_D+0.5	V

TOTAL SYSTEM

Symbol	Parameter	Condition	Ratings	Unit	
$V_{CC(PROT)}$	Self protection supply voltage limit (Short circuit protection capability)	V_D = 13.5~16.5V, Inverter Part T_j = 125°C, non-repetitive, less than 2μs	400	V	(6)
T_C	Module case operation temperature	Measurement point of Tc is provided in the following figure	-30~+115	°C	
T_{stg}	Storage temperature		-40~+125	°C	(7)
V_{iso}	Isolation voltage	60Hz, Sinusoidal, AC 1min, between connected all pins and heat sink plate	2000	V_{rms}	

Fig.2-1-1 Tc measurement position

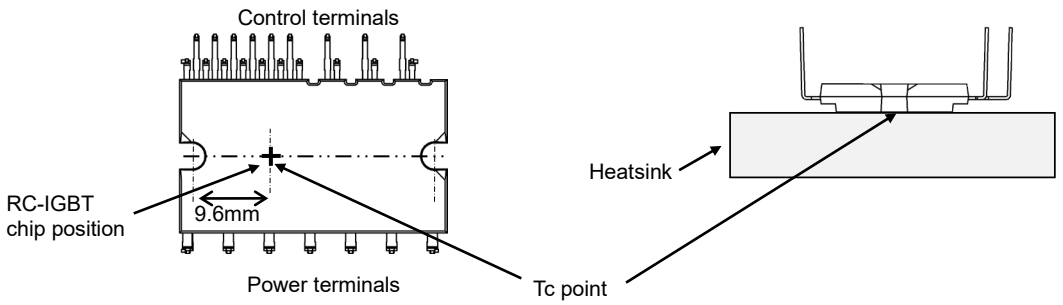

(8)

(1) Vcc — The maximum voltage can be biased between P-N. A voltage suppressing circuit such as a brake circuit is necessary if P-N voltage exceeds this value.

(2) Vcc(surge) — The maximum rating of P-N surge voltage in switching state. If P-N voltage exceeds this voltage, addition of a snubber circuit or cutting down parasitic wiring inductance is necessary to absorb the surge under this voltage.

(3) V_{CES} — The maximum sustained collector-emitter voltage of built-in IGBT and FWDi.

(4) +/-I_C — The allowable current flowing into collect electrode (@Tc=25°C). Pulse width and period are limited due to junction temperature Tj.

(5) Tj — The maximum junction temperature rating is 150°C. But for safe operation, operating temperature range should be determined considering life time of power cycle and so on.

(6) Vcc(prot) The maximum supply voltage for turning off IGBT safely in the case of an SC or OC fault. The power chip might be damaged if supply voltage exceeds this specification.

(7) Isolation voltage Isolation voltage is the voltage between all shorted pins and copper surface of DIPIPM. The maximum rating of isolation voltage of SLIMDIP is 2000Vrms. But if such as convex shape heat radiation fin will be used for enlarging clearance between outer terminals and heat radiation fin (2.5mm or more is recommended), it is able to correspond isolation voltage 2500Vrms. See Fig.2-1-2.
SLIMDIP is recognized by UL at the condition 2500Vrms with convex shape heat radiation fin.

(8) Tc position Tc (case temperature) is defined to be the temperature just beneath the specified power chip of VN phase. It is necessary to mount a thermocouple on the heat sink surface at the defined position to get accurate temperature information. Due to the control schemes (e.g. Different control between P and N-side like two phase modulation, high-side chopping), there is a possibility that highest Tc point is different from above point. In such cases, it is necessary to change the measuring point to that under the highest power chip.

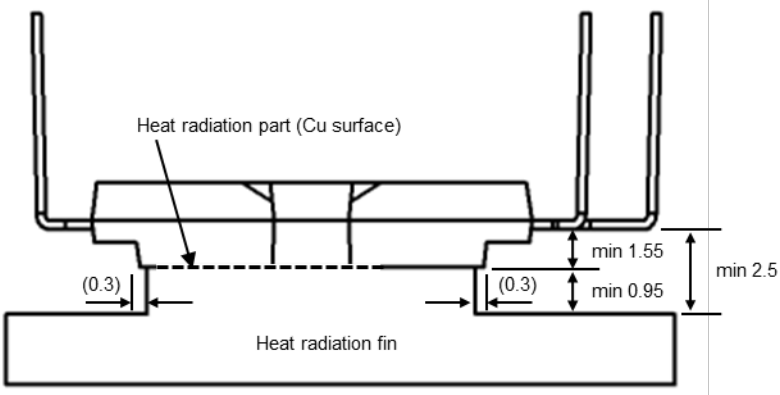

Fig.2-1-2 In the case of using convex fin (unit: mm)

[Power chip position]
Fig.2-1-3 indicates the position of the each power chips. (This figure is the view from laser marked side.)

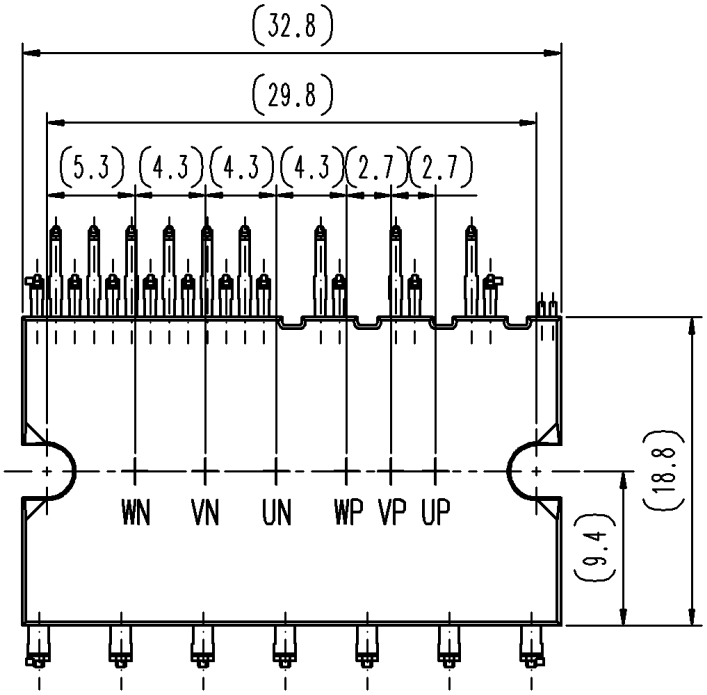

Fig.2-1-3 Power chip position(Dimension in mm)

2.1.2 Thermal Resistance

Table 2-1-2 shows the thermal resistance of SLIMDIP-L.

Table 2-1-2 Thermal resistance of SLIMDIP-L

Symbol	Parameter	Condition	Limits			Unit
			Min.	Typ.	Max.	
$R_{th(j-c)Q}$	Junction to case thermal resistance (Note)	Inverter IGBT part (per 1/6 module)	-	-	4.0	K/W

Note : Grease with good thermal conductivity and long-term endurance should be applied evenly with about +100μm~+200μm on the contacting surface of DIPIPM and heat sink. The contacting thermal resistance between DIPIPM case and heat sink Rth(c-f) is determined by the thickness and the thermal conductivity of the applied grease. For reference, Rth(c-f) is about 0.4K/W (per 1/6 module, grease thickness: 20μm, thermal conductivity: 1.0W/m•K).

The above data shows the thermal resistance between chip junction and case at steady state. The thermal resistance goes into saturation in about 10 seconds. The unsaturated thermal resistance is called as transient thermal impedance which is shown in Fig.2-1-4. Zth(j-c)* is the normalized value of the transient thermal impedance. (Zth(j-c)*= Zth(j-c) / Rth(j-c)max) For example, the IGBT transient thermal impedance of SLIMDIP-L in 0.1second is 4.0×0.65=2.6K/W.

The transient thermal impedance isn't used for constantly current, but for short period current (ms order). (E.g. In the cases at motor starting, at motor lock･･･)

As SLIMDIP applies RC-IGBT, which integrates IGBT and FWDi on one chip die, as a power chip, it is necessary for loss and temperature estimation to consider the sum of IGBT part and FWDi part losses.

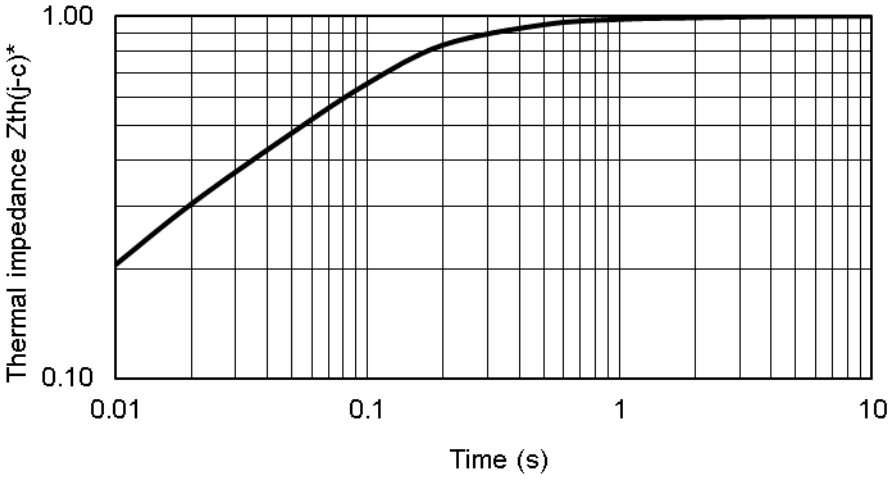

Fig.2-1-4 Typical transient thermal impedance

2.1.3 Electric Characteristics and Recommended Conditions

Table 2-1-3 shows the typical static characteristics and switching characteristics of SLIMDIP-L.

Table 2-1-3 Static characteristics and switching characteristics of SLIMDIP-L (T_j = 25°C, unless otherwise noted)

Symbol	Parameter	Condition		Limits			Unit
				Min.	Typ.	Max.	
$V_{CE(sat)}$	Collector-emitter saturation voltage	V_D=V_{DB} = 15V, V_{IN}= 5V	I_C= 15A , T_j= 25°C	-	1.60	1.95	V
			I_C= 15A , T_j= 125°C	-	1.80	2.15	
V_{EC}	FWDi forward voltage	V_{IN}= 0V, -I_C= 15A		-	1.40	1.90	V
t_{on}	Switching times	V_{CC}= 300V, V_D= V_{DB}= 15V I_C= 15A, T_j= 125°C, V_{IN}= 0↔5V Inductive Load (upper-lower arm)		0.65	1.05	1.45	μs
$t_{C(on)}$				-	0.40	0.65	μs
t_{off}				-	1.15	1.60	μs
$t_{C(off)}$				-	0.15	0.30	μs
t_{rr}				-	0.30	-	μs
I_{CES}	Collector-emitter cut-off current	V_{CE}=V_{CES}	T_j= 25°C	-	-	1	mA
			T_j= 125°C	-	-	10	

Switching time definition and performance test method are shown in Fig.2-1-5 and 2-1-6.
Switching characteristics are measured by half bridge circuit with inductance load.

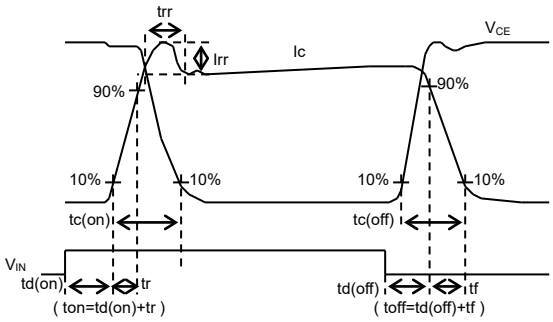

Fig.2-1-5 Switching time definition

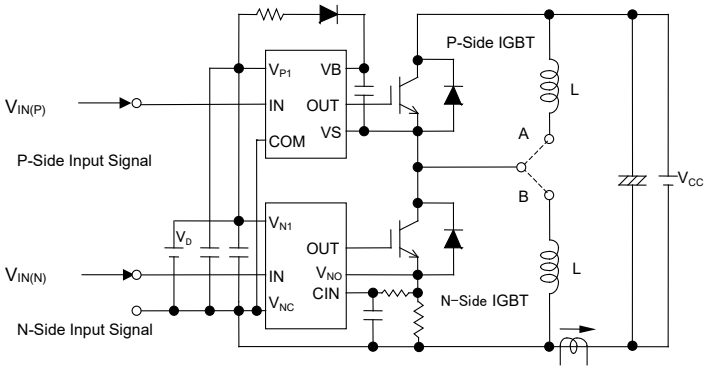

Fig.2-1-6 Evaluation circuit (inductive load)
*Short A for N-side switching, or short B for P-side switching.

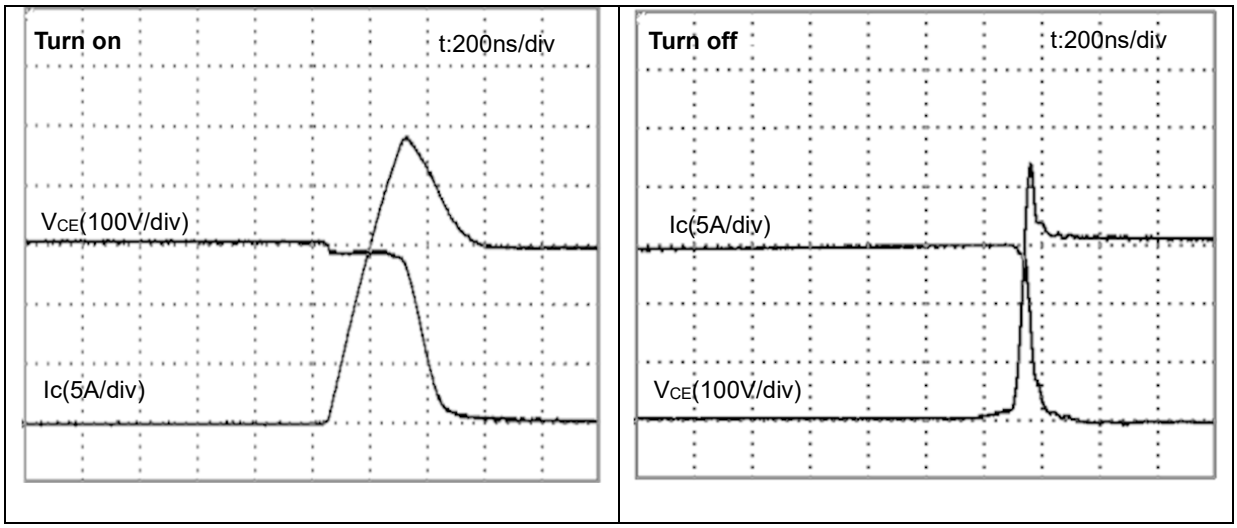

Fig.2-1-7 Typical switching waveform (SLIMDIP-L)
Conditions: V_{CC}=300V, V_D=V_{DB}=15V, Tj=125°C, Ic=15A, Inductive load half-bridge circuit

Table 2-1-4 shows the typical control part characteristics of SLIMDIP-L.

Table 2-1-4 Control (Protection) characteristics of SLIMDIP-L (T_j = 25°C, unless otherwise noted)

Symbol	Parameter	Condition		Limits			Unit
				Min.	Typ.	Max.	
I_D	Circuit current	Total of V_{P1}-V_{NC}, V_{N1}-V_{NC}	V_D=15V, V_{IN}=0V	-	-	3.10	mA
			V_D=15V, V_{IN}=3.3V	-	-	4.20	
			V_D=15V, V_{IN}=5V			3.10	
I_{DB}		Each part of V_{UFB}-V_{UFS}, V_{VFB}-V_{VFS}, V_{WFB}-V_{WFS}	V_D=V_{DB}=15V, V_{IN}=0V	-	-	0.10	
			V_D=V_{DB}=15V, V_{IN}=5V	-	-	0.10	
$V_{SC(ref)}$	Short circuit trip level	V_D = 15V (Note 1)		0.455	0.480	0.505	V
UV_{DBt}	P-side Control supply under-voltage protection(UV)	T_j ≤125°C	Trip level	7.0	10.0	12.0	V
UV_{DBr}			Reset level	7.0	10.0	12.0	V
UV_{Dt}	N-side Control supply under-voltage protection(UV)		Trip level	10.3	-	12.5	V
UV_{Dr}			Reset level	10.8	-	13.0	V
V_{OT}	Temperature output	Pull down R=5.1kΩ	LVIC Temperature=95°C	2.76	2.89	3.03	V
			LVIC Temperature=25°C	0.86	1.16	1.39	V
OT_t	Overt temperature protection (Note2)	V_D = 15V Detect LVIC temperature	Trip level	115	130	145	°C
OT_{rh}			Hysteresis of trip-reset	-	10	-	°C
V_{FOH}	Fault output voltage	V_{SC} = 0V, F_O terminal pulled up to 5V by 10kΩ		4.9	-	-	V
V_{FOL}		V_{SC} = 1V, I_{FO} = 1mA		-	-	0.95	V
t_{FO}	Fault output pulse width	(Note 3)		20	-	-	μs
I_{IN}	Input current	V_{IN} = 5V		0.70	1.00	1.50	mA
$V_{th(on)}$	ON threshold voltage	Applied between U_P, V_P, W_P, U_N, V_N, W_N-V_{NC}		-	1.70	2.35	V
$V_{th(off)}$	OFF threshold voltage			0.70	1.30	-	
$V_{th(hys)}$	ON/OFF threshold hysteresis voltage			0.25	0.40	-	
V_F	Bootstrap Di forward voltage	I_F=10mA including voltage drop by limiting resistor		1.1	1.7	2.3	V
R	Built-in limiting resistance into bootstrap Di			80	100	120	Ω

Note 1 : SC protection works only for N-side IGBT. Please select the external shunt resistance such that the SC trip-level is less than 1.7 times of the current rating.
2 : When the LVIC temperature exceeds OT trip temperature level(OT_t), OT protection works and Fo outputs. In that case if the heat sink dropped off or fixed loosely, don't reuse that DIPIPM. (There is a possibility that junction temperature of power chips exceeded maximum Tj(150°C).
3 : Fault signal Fo outputs when SC, UV or OT protection works. Fo pulse width is different for each protection modes. At SC failure, Fo pulse width is a fixed width (=minimum 20μs), but at UV or OT failure, Fo outputs continuously until recovering from UV or OT state. (But minimum Fo pulse width is 20μs.)

***) Some specifications and condition such as circuit current (I_D, I_{DB}), P-side Control supply under-voltage protection (UV_{DBt}, UV_{DBr}), Temperature output (V_{OT}) are different between each products. For more detail, please refer the datasheet.**

Recommended operating conditions of SLIMDIP-L are given in Table 2-1-5.

Although these conditions are the recommended but not the necessary ones, it is highly recommended to operate the modules within these conditions so as to ensure DIPIPM safe operation.

Table 2-1-5 Recommended operating conditions of SLIMDIP-L

Symbol	Parameter	Condition	Limits			Unit
			Min.	Typ.	Max.	
V_{CC}	Supply voltage	Applied between P-NU, NV, NW	0	300	400	V
V_D	Control supply voltage	Applied between V_{P1}-V_{NC}, V_{N1}-V_{NC}	13.5	15.0	16.5	V
V_{DB}	Control supply voltage	Applied between V_{UFB}-V_{UFS}, V_{VFB}-V_{VFS}, V_{WFB}-V_{WFS}	13.0	15.0	18.5	V
ΔV_D, ΔV_{DB}	Control supply variation		-1	-	+1	V/μs
t_{dead}	Arm shoot-through blocking time	For each input signal, Tc≤100°C	1.0	-	-	μs
f_{PWM}	PWM input frequency	T_C ≤ 100°C, T_j ≤ 125°C	-	-	20	kHz
PWIN(on)	Minimum input pulse width	(Note 1)	0.7	-	-	μs
PWIN(off)			0.7	-	-	
V_{NC}	V_{NC} variation	Between V_{NC}-NU, NV, NW (including surge)	-5.0	-	+5.0	V
T_j	Junction temperature		-20	-	+125	°C

Note 1: DIPIPM might not make response if the input signal pulse width is less than PWIN(on), PWIN(off).

About Control supply variation

If high frequency noise superimposed to the control supply line, IC malfunction might happen and cause DIPIPM erroneous operation. To avoid such problem, line ripple voltage should meet the following specifications:

dV/dt ≤ +/-1V/μs, Vripple≤2Vp-p

***) Some specifications and condition such as arm shor-through blocking time (t_{deat}), PWM input frequency (f_{PWM}) are different between each products. For more detail, please refer the datasheet.**

2.1.4 Mechanical Characteristics and Ratings

The mechanical characteristics and ratings are shown in Table 2-1-6.
Please refer to Section 2.4 for the detailed mounting instruction of SLIMDIP.

Table 2-1-6 Mechanical characteristics and ratings of SLIMDIP-L

Parameter	Condition		Limits			Unit
			Min.	Typ.	Max.	
Mounting torque	Mounting screw : M3 (Note 1)	Recommended 0.69N·m	0.59	0.69	0.78	N·m
Terminal pulling strength	Control terminal: Load 5N Power terminal: Load 10N	JEITA-ED-4701	10	-	-	S
Terminal bending strength	Control terminal: Load 2.5N Power terminal: Load 5N 90deg. bend	JEITA-ED-4701	2	-	-	times
Weight			-	5.5	-	G
Heat radiation part flatness	(Note 2)		-30	-	80	μm

Note 1: Plain washers (ISO 7089~7094) are recommended.
Note 2: Measurement positions of heat radiation part flatness are as below.

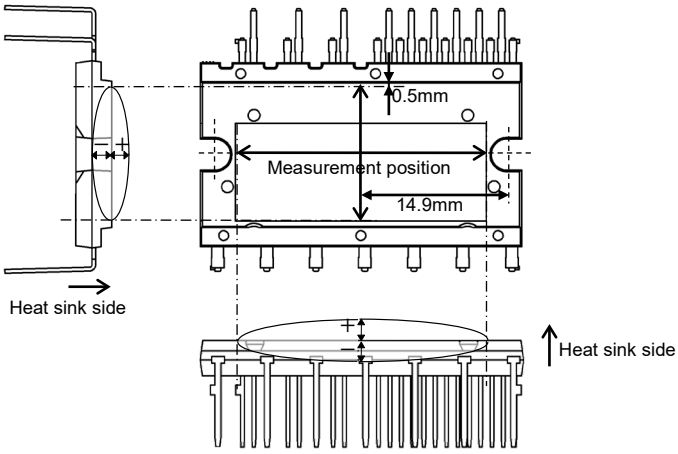

2.2 Protective Functions and Operating Sequence

SLIMDIP has Short circuit (SC), Under Voltage of control supply (UV), Over Temperature (OT) and temperature output (VOT) for protection function. The operating principle and sequence are described below.

2.2.1 Short Circuit Protection

1. General

SLIMDIP uses external shunt resistor for the current detection as shown in Fig.2-2-1. The internal protection circuit inside the IC captures the excessive large current by comparing the CIN voltage generated at the shunt resistor with the referenced SC trip voltage, and perform protection automatically. The threshold voltage trip level of the SC protection Vsc(ref) is typ. 0.48V.

In case of SC protection works, all the gates of N-side three phase IGBTs will be interrupted together with a fault signal output. To prevent DIPIPM erroneous protection due to normal switching noise and/or recovery current, it is necessary to set an RC filter (time constant: 1.5μ ~ 2μs) to the CIN terminal input (Fig.2-2-1, 2-2-2). Also, please make the pattern wiring around the shunt resistor as short as possible.

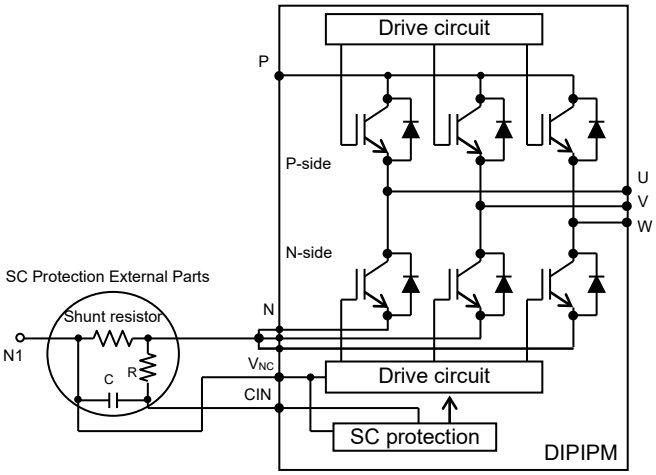

Fig.2-2-1 SC protecting circuit

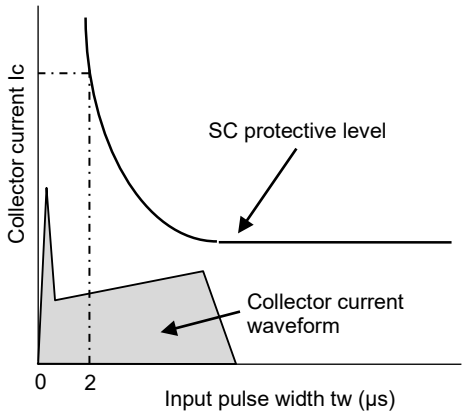

Fig.2-2-2 Filter time constant setting

2. SC protection Sequence

SC protection (N-side only with the external shunt resistor and RC filter)

a1. Normal operation: IGBT ON and carrying current.
a2. Short circuit current detection (SC trigger).
(It is recommended to set RC time constant 1.5~2.0μs so that IGBT shut down within 2.0μs when SC.)
a3. All N-side IGBTs gate are hard interrupted.
a4. All N-side IGBTs turn OFF.
a5. Fo outputs for t_{Fo}=minimum 20μs.
a6. Input = “L”. IGBT OFF
a7. Fo finishes output, but IGBTs don't turn on until inputting next ON signal (L→H).
(IGBT of each phase can return to normal state by inputting ON signal to each phase.)
a8. Normal operation: IGBT ON and outputs current.

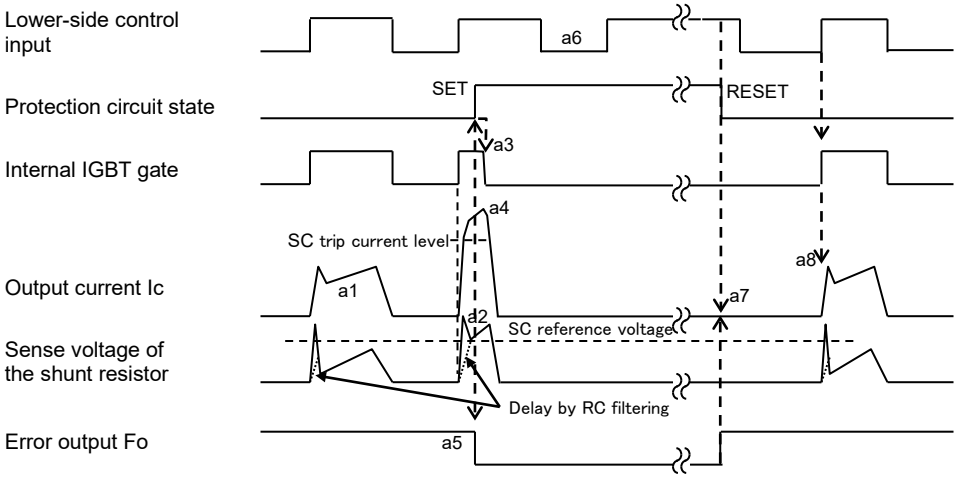

Fig.2-2-3 SC protection timing chart

3. Determination of Shunt Resistance

(1) Shunt resistance

The value of current sensing resistance is calculated by the following expression:

$$R_{Shunt} = V_{SC(ref)} / SC$$

where $V_{SC(ref)}$ is the referenced SC trip voltage.

The maximum SC trip level SC(max) should be set less than the IGBT minimum saturation current which is 1.7 times as large as the rated current. For example, the SC(max) of SLIMDIP-L should be set to 15x1.7=25.5A. The parameters ($V_{SC(ref)}$, R_{Shunt}) tolerance should be considered when designing the SC trip level.

For example of SLIMDIP-L, there is +/-0.025V tolerance in the spec of $V_{SC(ref)}$ as shown in Table 2-2-1.

Table 2-2-1 Specification for $V_{SC(ref)}$

Condition	Min	Typ	Max	Unit
at T_j=25°C, V_D=15V	0.455	0.480	0.505	V

Then, the range of SC trip level can be calculated by the following expressions:

$R_{Shunt(min)}=V_{SC(ref)\ max}$ /SC(max)

$R_{Shunt(typ)}= R_{Shunt(min)}$ / 0.95* then SC(typ) = $V_{SC(ref)\ typ}$ / $R_{Shunt(typ)}$

$R_{Shunt(max)}= R_{Shunt(typ)}$ x 1.05* then SC(min)= $V_{SC(ref)\ min}$ / $R_{Shunt(max)}$

*)This is the case that shunt resistance tolerance is within +/-5%.

So the SC trip level range is described as Table 2-2-2.

Table 2-2-2 Operative SC Range (R_{Shunt}=19.8mΩ (min), 20.8mΩ (typ), 21.8mΩ(max)

Condition	min.	typ.	Max.	Unit
at T_j=25°C, V_D=15V	20.9	23.1	25.5	A

(e.g. 19.8mΩ ($R_{shunt(min)}$)= 0.505V (=$V_{SC(max)}$) / 25.5A(=SC(max))

There is the possibility that the actual SC protection level becomes less than the calculated value. This is considered due to the resonant signals caused mainly by parasitic inductance and parasitic capacity. It is recommended to make a confirmation of the resistance by prototype experiment.

(2) RC Filter Time Constant

It is necessary to set an RC filter in the SC sensing circuit in order to prevent malfunction of SC protection due to noise interference. The RC time constant is determined depending on the applying time of noise interference and the SCSOA of the DIPIPM. (Recommended time constant: 1.5μ ~ 2μs)

When the voltage drop on the external shunt resistor exceeds the SC trip level, the time (t1) that the CIN terminal voltage rises to the referenced SC trip level can be calculated by the following expression:

$$V_{SC} = R_{shunt} \cdot I_c \cdot (1 - \varepsilon^{-\frac{t1}{\tau}})$$

$$t1 = -\tau \cdot \ln(1 - \frac{V_{SC}}{R_{shunt} \cdot I_c})$$

Vsc : the CIN terminal input voltage, Ic : the peak current, τ : the RC time constant

On the other hand, the typical time delay t2 (from Vsc voltage reaches Vsc(ref) to IGBT gate shutdown) of IC is shown in Table 2-2-3.

Table 2-2-3 Internal time delay of IC

Item	min	typ	max	Unit
IC transfer delay time	-	-	0.5	μs

Therefore, the total delay time from an SC level current happened to the IGBT gate shutdown becomes:

$$t_{TOTAL}=t1+t2$$

2.2.2 Control Supply UV Protection

The UV protection is designed to prevent unexpected operating behavior as described in Table 2-2-4.

Both P-side and N-side have UV protecting function; however, fault signal (Fo) output only corresponds to N-side UV protection. Fo output continuously during UV state. P-side UV protection also shut the gates off without Fo output.

In addition, there is a noise filter (typ. 7μs) integrated in the UV protection circuit to prevent instantaneous UV erroneous trip. Therefore, the control signals are still transferred in the initial 7μs after UV happened.

Table 2-2-4 DIPIPM operating behavior versus control supply voltage

Control supply voltage	Operating behavior
0-4V (P, N)	In this voltage range, built-in control IC may not work properly. Normal operating of each protection function (UV, Fo output etc.) is not also assured. Normally IGBT does not work. But external noise may cause DIPIPM malfunction (turns ON), so DC-link voltage need to start up after control supply starts-up.
4V-UV_{Dt} (N), UV_{DBt} (P)	UV function becomes active and output Fo (N-side only). Even if control signals are applied, IGBT does not work
UV_{Dt} (N)-13.5V UV_{DBt} (P)-13.0V	IGBT works; however, conducting loss and switching loss will increase, and result extra temperature rise at this state.
13.5-16.5V (N) 13.0-18.5V (P)	Recommended conditions.
16.5-20V (N) 18.5-20V (P)	IGBT works; however, its switching speed becomes faster at this state. Its saturation current also becomes larger and increases SC broken risk.
20V- (P, N)	The control circuit may be destroyed.

Ripple Voltage Limitation of Control Supply

If high frequency noise superimposed to the control supply line, IC malfunction might happen and cause DIPIPM erroneous operation. To avoid such problem, line ripple voltage should meet the following specifications:

$$dV/dt \leq +/-1V/\mu s,\ Vripple \leq 2Vp\text{-}p$$

[N-side UV Protection Sequence]

a1. Control supply voltage V_D rising: After the voltage level reaches UV_{Dr}, the circuits start to operate when next input is applied (L→H). (IGBT of each phase can return to normal state by inputting ON signal to each phase.)

a2. Normal operation: IGBT ON and carrying current.

a3. V_D level dips to under voltage trip level. (UV_{Dt}).

a4. All N-side IGBTs turn OFF in spite of control input condition.

a5. Fo outputs for t_{Fo}=minimum 20μs, but output is extended during V_D keeps below UV_{Dr}.

a6. V_D level reaches UV_{Dr}.

a7. Normal operation: IGBT ON and outputs current.

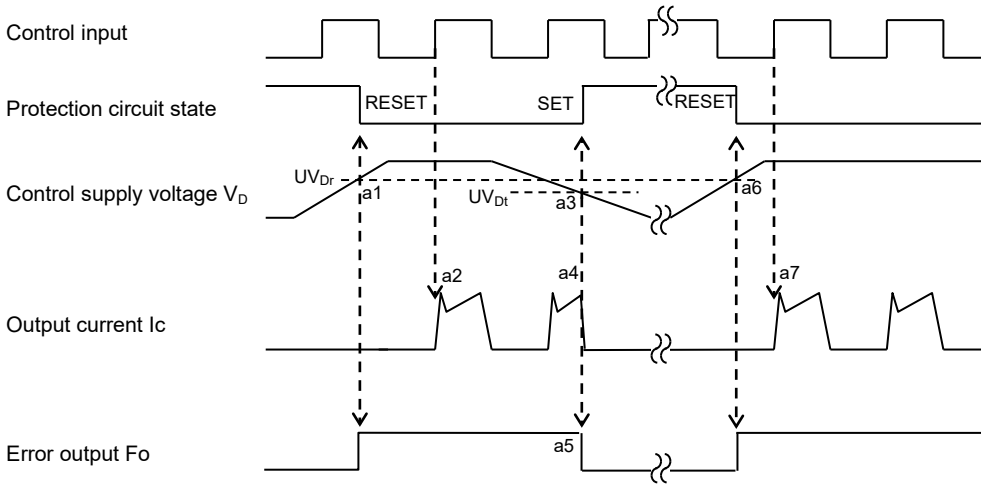

Fig.2-2-4 Timing chart of N-side UV protection

[P-side UV Protection Sequence]

a1. Control supply voltage V_{DB} rises. After the voltage reaches UV_{DBr}, the circuits start to operate when next input is applied (L→H).

a2. Normal operation: IGBT ON and carrying current.

a3. V_{DB} level dips to under voltage trip level (UV_{DBt}).

a4. IGBT of corresponding phase only turns OFF in spite of control input signal level, but there is no F_O signal output.

a5. V_{DB} level reaches UV_{DBr}.

a6. Normal operation: IGBT ON and outputs current.

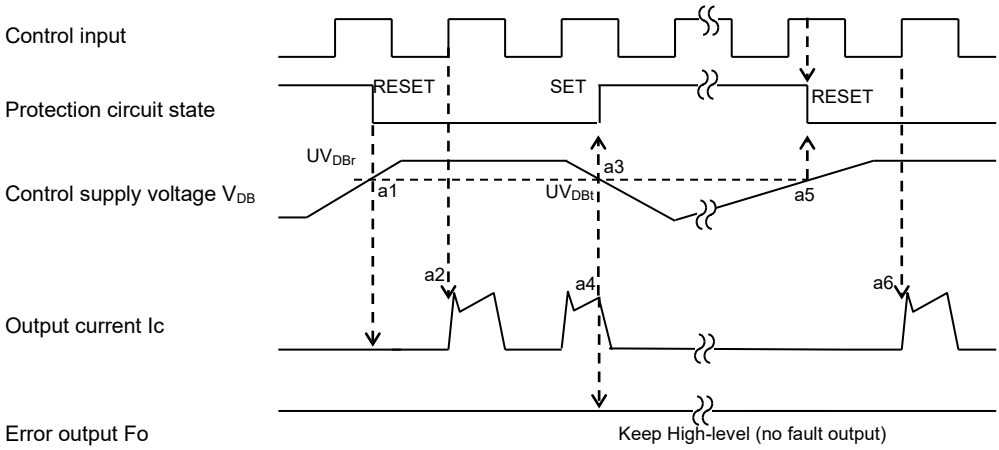

Fig.2-2-5 Timing Chart of P-side UV protection

2.2.3 OT Protection

SLIMDIP series have OT (over temperature) protection function by monitoring LVIC temperature rise.
While LVIC temperature exceeds and keeps over OT trip temperature, error signal Fo output and all N-side IGBTs are shut down without reference to input signal. (P-side IGBTs are not shut down.)
The specification of OT trip temperature and its sequence are described in Table 2-2-5 and Fig.2-2-6.

Table 2-2-5 OT trip temperature specification

Item	Symbol	Condition		Min.	Typ.	Max.	Unit
Over temperature protection	OT_t	V_D=15V, At temperature of LVIC	Trip level	115	130	145	°C
	OT_{rh}		Trip/reset hysteresis	-	10	-	

[OT Protection Sequence]
a1. Normal operation: IGBT ON and outputs current.
a2. LVIC temperature exceeds over temperature trip level(OT_t).
a3. All N-side IGBTs turn OFF in spite of control input condition.
a4. Fo outputs for t_{Fo}=minimum 20μs, but output is extended during LVIC temperature keeps over OT_t.
a5. LVIC temperature drops to over temperature reset level.
a6. Normal operation: IGBT turns on by next ON signal (L→H).
(IGBT of each phase can return to normal state by inputting ON signal to each phase.)

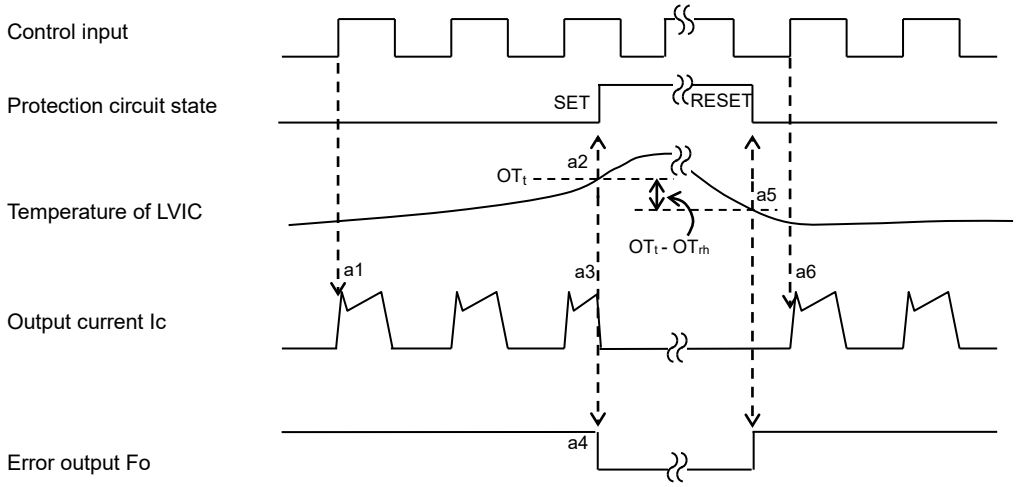

Fig.2-2-6 Timing Chart of OT protection

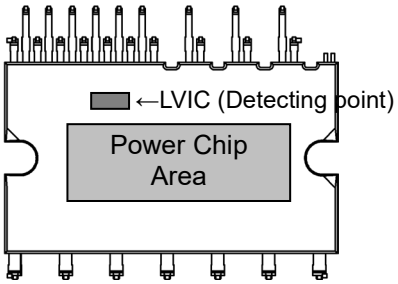

Fig.2-2-7 Temperature detecting point

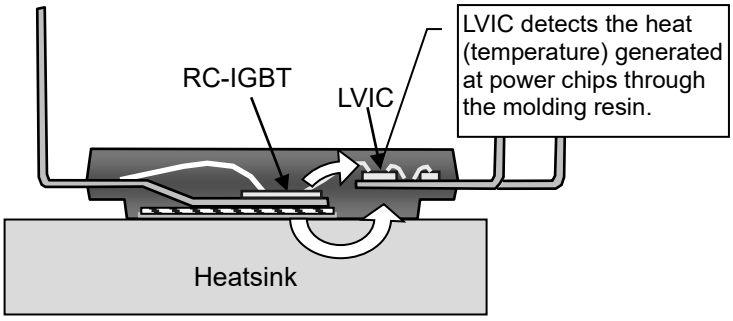

Fig.2-2-8 Thermal conducting from power chips

Precaution about this OT protection function

(1)This OT protection will not work effectively in the case of rapid temperature rise like motor lock or over current. (This protection monitors LVIC temperature, so it cannot respond to rapid temperature rise of power chips.)

(2)If the cooling system is abnormal state (e.g. heat sink comes off, fixed loosely, or cooling fun stops) when OT protection works, exchange the DIPIPM and don't reuse it. (The junction temperature of power chips may exceeded the maximum rating of Tj(150°C).)

2.2.4 Temperature output function V_{OT}

(1) Usage of this function

This function measures the temperature of control LVIC by built in temperature sensor on LVIC. The heat generated at IGBT and FWDi transfers to LVIC through molding resin of package. So LVIC temperature cannot respond to rapid temperature rise of those power chips effectively. (e.g. motor lock, short circuit) It is recommended to use this function for protecting from slow excessive temperature rise by such cooling system down and continuance of overload operation. (Replacement from the thermistor which was mounted on outer heat sink currently)

(2) V_{OT} characteristics

V_{OT} output circuit, which is described in Fig.2-2-9, is the output of OP amplifier circuit. The current capability of V_{OT} output is described as Table 2-2-6. The characteristics of V_{OT} output vs. LVIC temperature is linear characteristics described in Fig.2-2-13. There are some cautions for using this function as below.

Table 2-2-6 Output capability(Tc=-30°C ~100°C)

	min.
Source	1.7mA
Sink	0.1mA

Source: Current flow from V_{OT} to outside.
Sink : Current flow from outside to V_{OT}.

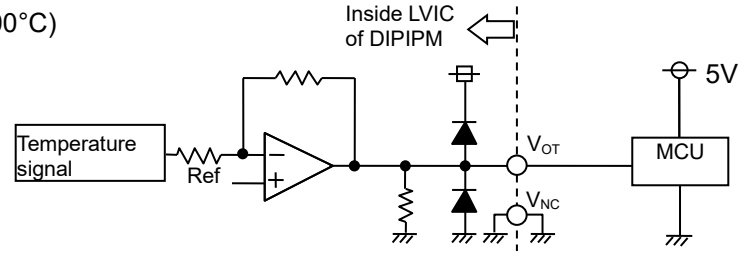

Fig.2-2-9 V_{OT} output circuit

<u>In the case of detecting lower temperature than room temperature</u>

It is recommended to insert 5.1kΩ pull down resistor for getting linear output characteristics at lower temperature than room temperature. When the pull down resistor is inserted between V_{OT} and V_{NC}(control GND), the extra current calculated by V_{OT} output voltage / pull down resistance flows as LVIC circuit current continuously. In the case of only using V_{OT} for detecting higher temperature than room temperature, it isn't necessary to insert the pull down resistor.

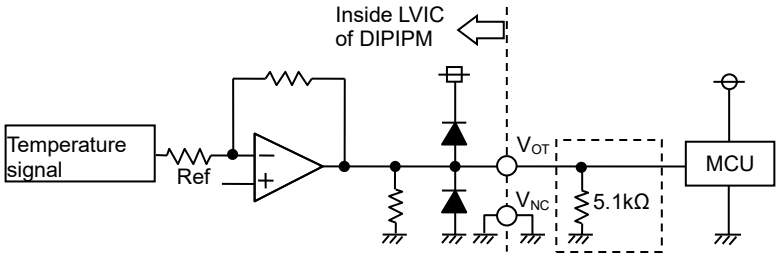

Fig.2-2-10 V_{OT} output circuit in the case of detecting low temperature

- <u>In the case of using with low voltage controller(MCU)</u>

In the case of using V_{OT} with low voltage controller (e.g. 3.3V MCU), V_{OT} output might exceed control supply voltage 3.3V when temperature rises excessively. If system uses low voltage controller, it is recommended to insert a clamp Di between control supply of the controller and this output for preventing over voltage.

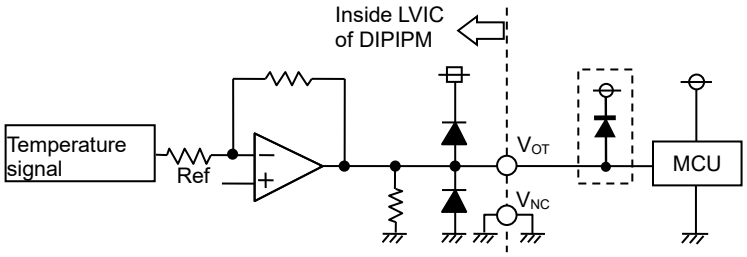

Fig.2-2-11 V_{OT} output circuit in the case of using with low voltage controller

- In the case that the protection level exceeds control supply of the controller

  In the case of using low voltage controller like 3.3V MCU, if it is necessary to set the trip V_{OT} level to control supply voltage (e.g. 3.3V) or more, there is the method of dividing the V_{OT} output by resistance voltage divider circuit and then inputting to A/D converter on MCU (Fig.2-2-12). In that case, sum of the resistances of divider circuit should be as much as 5kΩ. About the necessity of clamp diode, we consider that the divided output will not exceed the supply voltage of controller generally, so it will be unnecessary to insert the clump diode. But it should be judged by the divided output level finally.

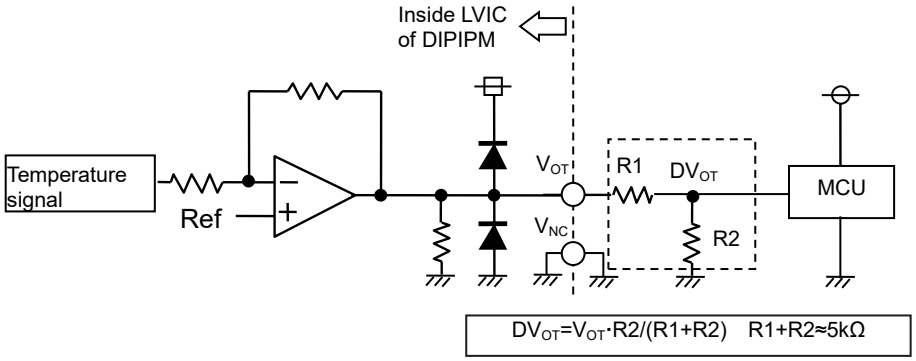

Fig.2-2-12 V_{OT} output circuit in the case with high protection level

Please handle the following characteristics of VOT output vs. LVIC temperature as reference data to set over temperature protection. These curves are based on theoretical designed value excluding specified value in the target specification.

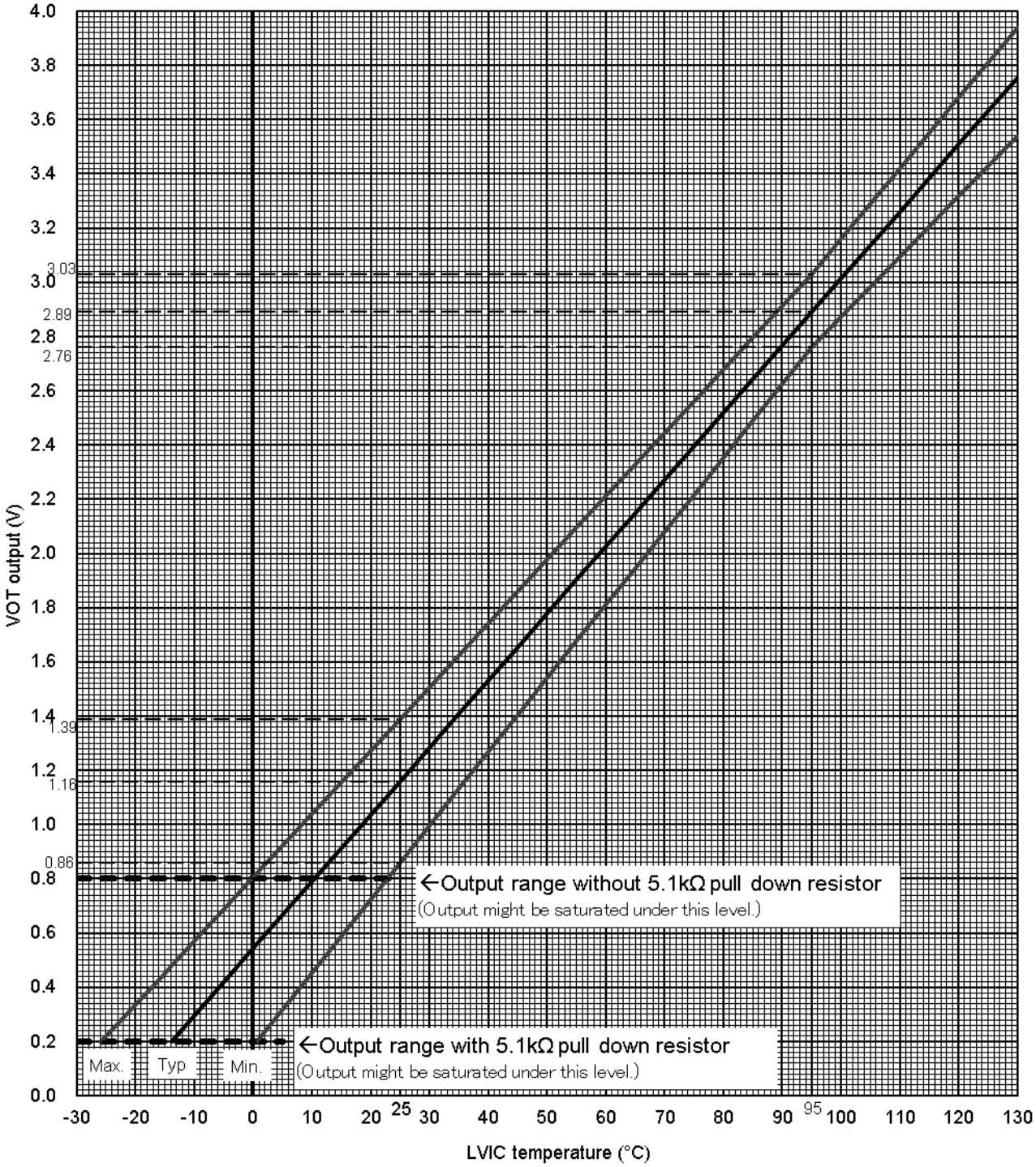

Fig.2-2-13 V_{OT} output vs. LVIC temperature (example:SLIMDIP-L)

As mentioned above, the heat of power chips transfers to LVIC through the heat sink and package, so the relationship between LVIC temperature: Tic(=V_{OT} output), case temperature: Tc(under the chip defined on datasheet), and junction temperature: Tj depends on the system cooling condition, heat sink, control strategy, etc.

This relationship may be different due to the cooling conditions. So when setting the threshold temperature for protection, it is necessary to get the relationship between them on your real system. And when setting threshold temperature Tic, it is important to consider the protection temperature assures; Tc≤100°C and Tj ≤150°C.

2.3 Package Outlines

2.3.1 Package outlines and PCB Through-hole Pattern

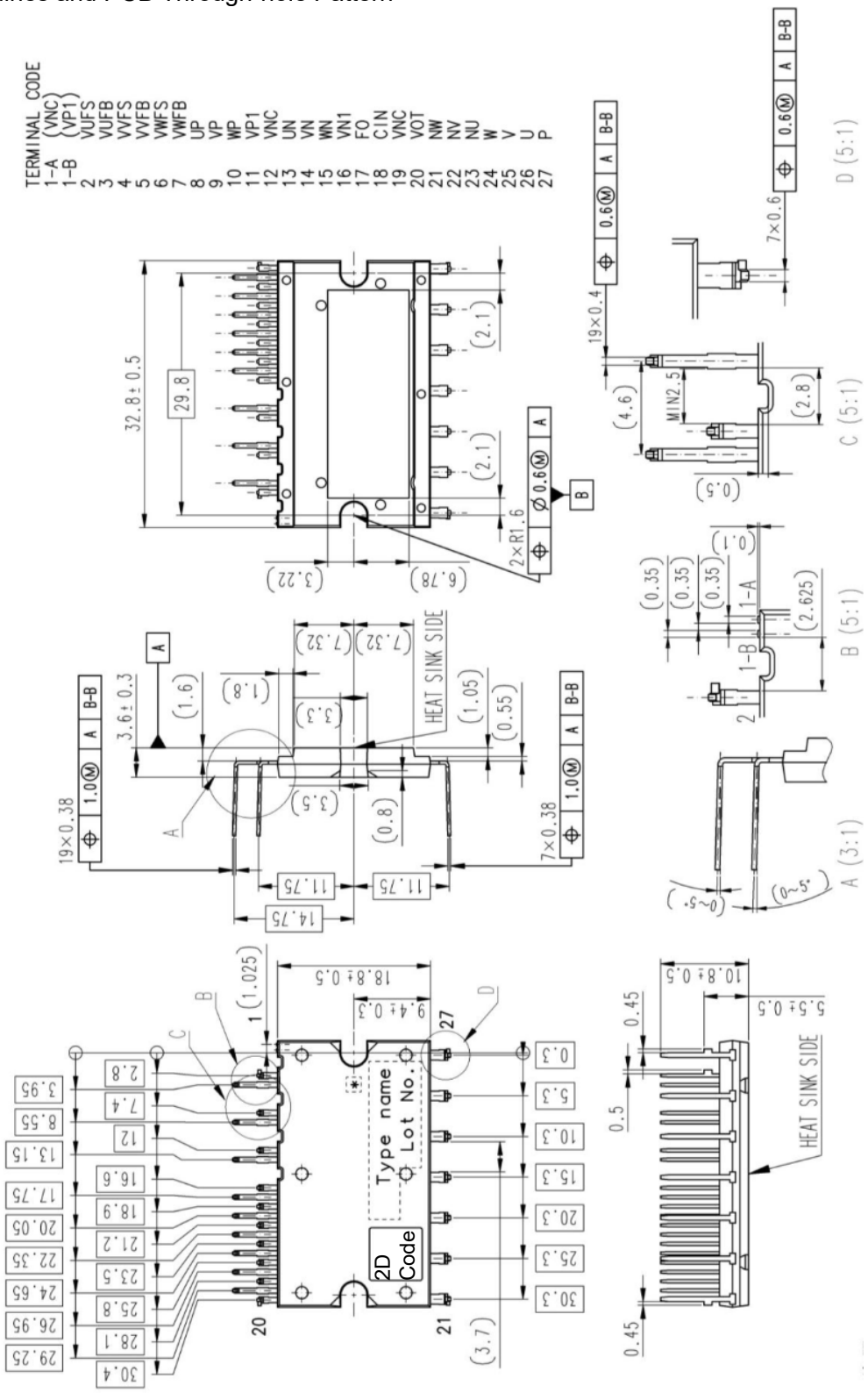

Note: Connect only one V_{NC} terminal (No.12 or 19) to the system GND and leave another one open.

Fig.2-3-1 Package outline drawing with normal terminal length (Dimension in mm)

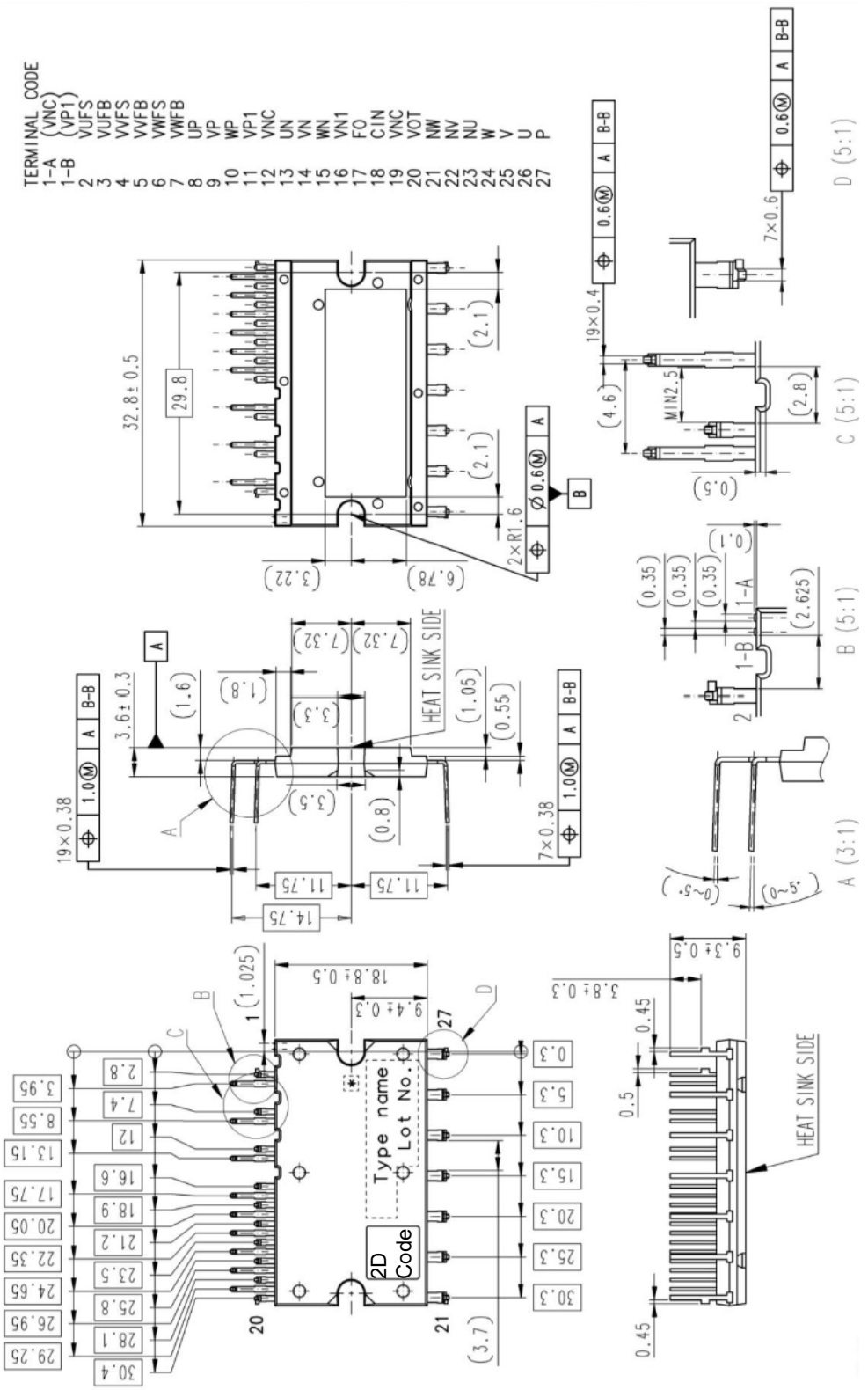

Fig.2-3-2 Package outline drawing with short terminal length (Dimension in mm)

Fig 2-3-3 shows the layout of recommended through-hole locations and diameters for SLIMDIP.

[Dimension: mm]

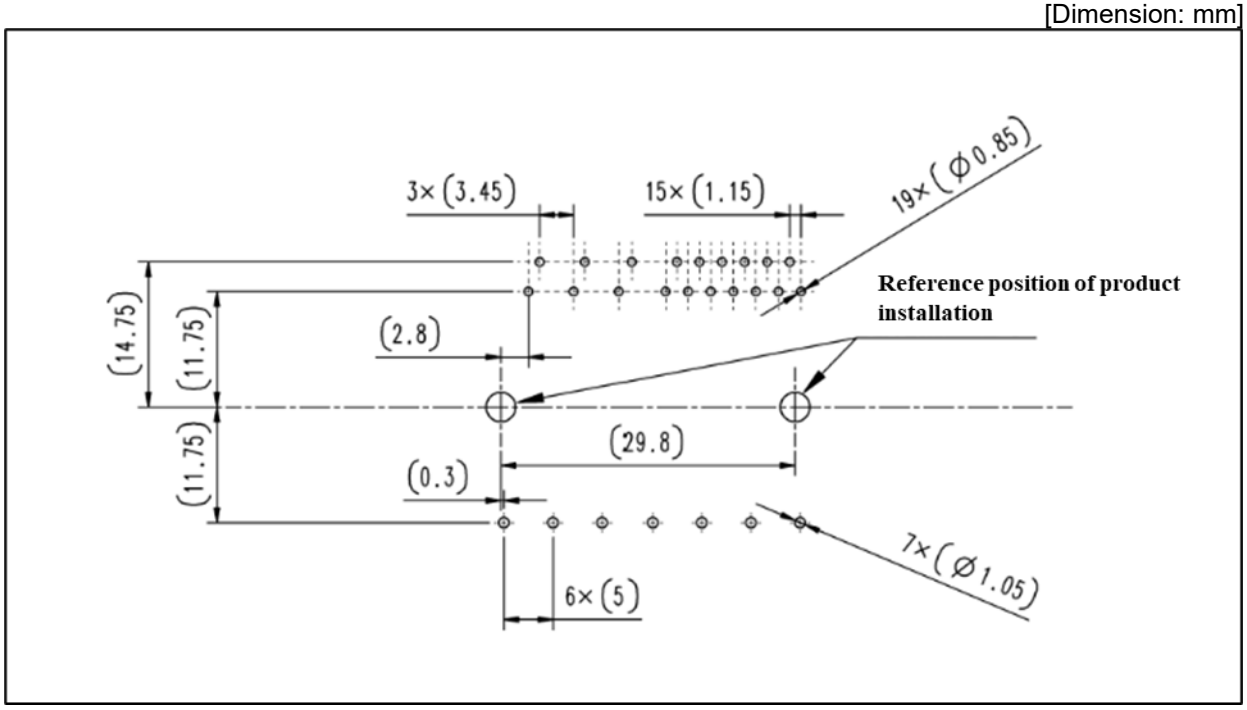

Fig.2-3-3 PCB through-hole pattern of SLIMDIP (Reference Figure)

2.3.2 Marking

The laser marking specification of SLIMDIP is described in Fig.2-3-4. Company name, Country of origin, Type name, Lot number, product specification, and 2D code mark are marked in the upper side of module.

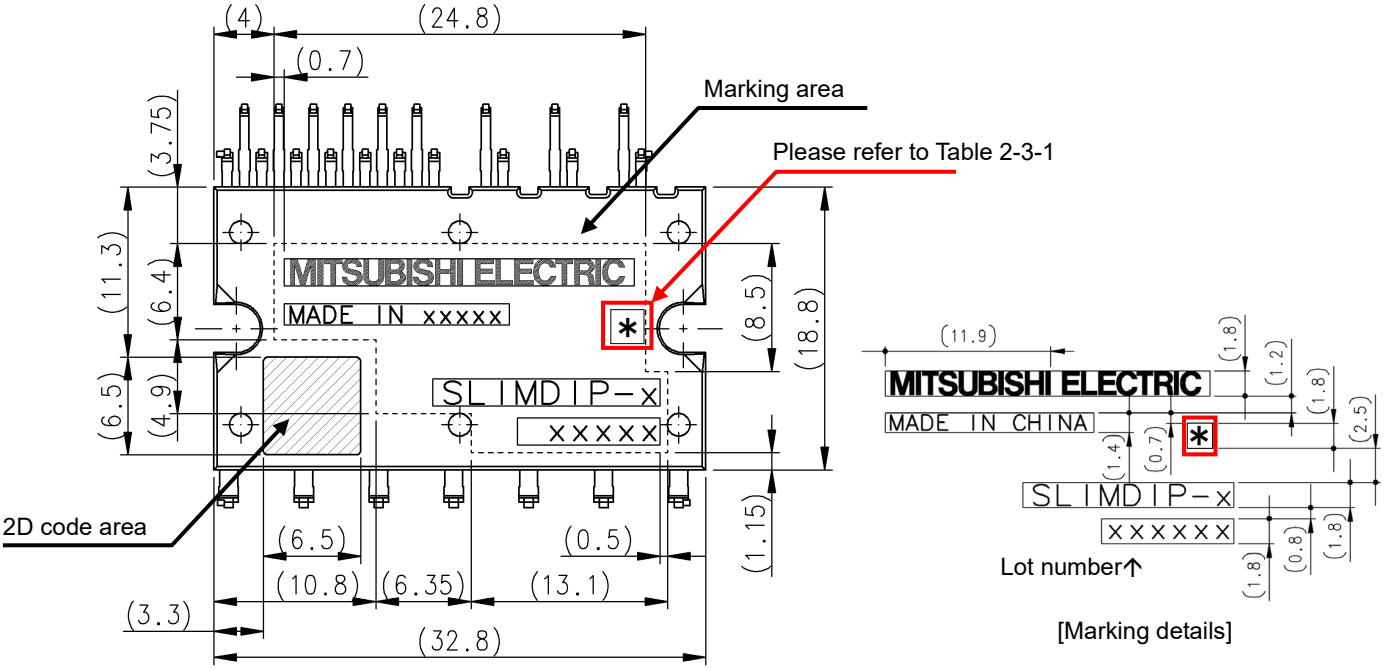

Fig.2-3-4 Laser marking view

The Lot number indicates production year, month, running number and country of origin.
The detailed is described as below.

(Example) H 5 8 AA1

- AA1 → Running number
- 8 → Product month (however O: October, N: November, D: December)
- 5 → Last figure of Product year (e.g. “5” in the case of 2015)
- H → Factory identification
  - H : Manufactured at the factory in China

The marking content of “＊” is according to Table 2-3-1.

Table 2-3-1 Product Specification

Mark	Terminal form
No mark	Normal
S	Short

2.3.3 Terminal Description

Table 2-3-2 Terminal description

Pin	Name	Description
1-A	(V_{NC})*2	Inner used terminal. Keep no connection It has control GND potential.
1-B	(V_{P1})*2	Inner used terminal. Keep no connection. It has control supply potential.
2	V_{UFS}	U-phase P-side drive supply GND terminal
3	V_{UFB}	U-phase P-side drive supply positive terminal
4	V_{VFS}	V-phase P-side drive supply GND terminal
5	V_{VFB}	V-phase P-side drive supply positive terminal
6	V_{WFS}	W-phase P-side drive supply GND terminal
7	V_{WFB}	W-phase P-side drive supply positive terminal
8	U_P	U-phase P-side control input terminal
9	V_P	V-phase P-side control input terminal
10	W_P	W-phase P-side control input terminal
11	V_{P1}	P-side control supply positive terminal
12	V_{NC}*1	P-side control supply GND terminal
13	U_N	U-phase N-side control input terminal
14	V_N	V-phase N-side control input terminal
15	W_N	W-phase N-side control input terminal
16	V_{N1}	N-side control supply positive terminal
17	F_O	Fault signal output terminal
18	CIN	SC trip voltage detecting terminal
19	V_{NC}*1	N-side control supply GND terminal
20	V_{OT}	Temperature output
21	NW	W-phase N-side IGBT emitter
22	NV	V-phase N-side IGBT emitter
23	NU	U-phase N-side IGBT emitter
24	W	W-phase output terminal (connected to No.6 terminal internally)
25	V	V-phase output terminal (connected to No.4 terminal internally)
26	U	U-phase output terminal (connected to No.2 terminal internally)
27	P	Inverter DC-link positive terminal

*1) Connect only one V_{NC} terminal to the system GND and leave another one open.
*2) No.1-A,1-B are used internally, so it is necessary to leave no connection.

Table 2-3-3 Detailed description of input and output terminals

Item	Symbol	Description
P-side drive supply positive terminal P-side drive supply GND terminal	V_{UFB}- V_{UFS} V_{VFB}- V_{VFS} V_{WFB}- V_{WFS}	• Drive supply terminals for P-side IGBTs. • By mounting bootstrap capacitor, individual isolated power supplies are not needed for the P-side IGBT drive. Each bootstrap capacitor is charged by the N-side V_D supply when potential of output terminal is almost GND level. • Abnormal operation might happen if the V_D supply is not aptly stabilized or has insufficient current capability due to ripple or surge. In order to prevent its malfunction, a bypass capacitor with favorable frequency and temperature characteristics (~2μF) should be mounted very closely to each pair of these terminals. • Inserting a Zener diode (24V/1W) between each pair of control supply terminals is helpful to prevent control IC from surge destruction.
P-side control supply terminal N-side control supply terminal	V_{P1} V_{N1}	• Control supply terminals for the built-in HVIC and LVIC. • Connect between V_{P1} and V_{N1} on the PCB pattern externally. • In order to prevent malfunction caused by noise and ripple in the supply voltage, a bypass capacitor with favorable frequency characteristics (~2μF) should be mounted very closely to these terminals. • Carefully design the supply so that the voltage ripple caused by noise or by system operation is within the specified minimum limitation. • It is recommended to insert a Zener diode (24V/1W) between each pair of control supply terminals to prevent surge destruction.
N-side control GND terminal	V_{NC}	• Control ground terminal for the built-in HVIC and LVIC. • Ensure that line current of the power circuit does not flow through this terminal in order to avoid noise influences. • While there are two V_{NC} terminals, connect only one V_{NC} terminal to the GND, and leave another one open.
Control input terminal	U_P,V_P,W_P U_N,V_N,W_N	• Control signal input terminals.Voltage input type. • These terminals are internally connected to Schmitt trigger circuit. • The wiring of each input should be as short as possible to protect the DIPIPM from noise interference. • Use RC filter in case of signal oscillation. (Pay attention to threshold voltage of input terminal, because input circuit has pull down resistor (min 3.3kΩ))
Short-circuit trip voltage detecting terminal	CIN	• For inverter part SC protection, input the potential of shunt resistor to CIN terminal through RC filter (for the noise immunity). • The time constant of RC filter is recommended to be up to 2μs.
Fault signal output terminal	F_O	• Fault signal output terminal. • Fo signal line should be pulled up to a 5V logic supply with over 5kΩ resistor for limitting the Fo sink current I_{Fo} up to 1mA. Normally 10kΩ is recommended.
Temperature output terminal	V_{OT}	• LVIC temperature is ouput by analog signal. • This terminal is connected the ouput of OP amplifer internally. • It is recommended to connect 5.1kΩ pulldown resistor when output linearlity is necessary under room temperature.
Inverter DC-link positive terminal	P	• DC-link positive power supply terminal. • Internally connected to the collectors of all P-side IGBTs. • To suppress surge voltage caused by DC-link wiring or PCB pattern inductance, smoothing capacitor should be located very closely to the P and N terminal of DIPIPM. It is also effective to add small film capacitor with good frequency characteristics.
Inverter DC-link negative terminal	NU,NV,NW	• Open emitter terminal of each N-side IGBT • Usually, these terminals are connected to the power GND through individual shunt resistor.
Inverter power output terminal	U, V, W	• Inverter output terminals for connection to inverter load (e.g. motor). • Each terminal is internally connected to the intermidiate point of the corresponding IGBT half bridge arm.

Note: Use oscilloscope to check voltage waveform of each power supply terminals and P&N terminals, the time division of OSC should be set to about 1μs/div. Please ensure the voltage (including surge) not exceed the specified limitation.
If the surge voltage overs the ratings or the overlapped noise beyonds its input threshold, consider countermeasures; reviewing its wiring, position and capacity of the capacitors, mounting of zener diode, filter enhancement etc.

2.4 Mounting Method

This section shows the electric spacing and mounting precautions of SLIMDIP.

2.4.1 Electric Spacing

The electric spacing specification of SLIMDIP is shown in Table 2-4-1

Table 2-4-1 Minimum insulation distance of SLIMDIP

	Clearance (mm)	Creepage (mm)
Between live terminals with high potential	2.50	3.00
Between terminals and heat sink	1.55	3.00

2.4.2 Mounting Method and Precautions

When installing the module to the heat sink, excessive or uneven fastening force might apply stress to inside chips. Then it will lead to a broken or degradation of the chips or insulation structure. The recommended fastening procedure is shown in Fig.2-4-1. When fastening, it is necessary to use the torque wrench and fasten up to the specified torque. And pay attention to the foreign particle on the contact surface between the module and the heat sink. Even if the fixing of heatsink was done by proper procedure and condition, there is a possibility of damaging the package because of tightening by unexpected excessive torque or tucking particle. For ensuring safety it is recommended to conduct the confirmation test (e.g. insulation inspection) on the final product after fixing the DIPIPM with the heatsink.

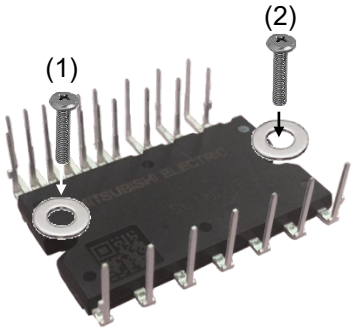

Temporary fastening
(1)→(2)

Permanent fastening
(1)→(2)

Note: Generally, the temporary fastening torque is set to 20-30% of the maximum torque rating.
Not care the order of fastening (1) or (2), but need to fasten alternately.

Fig.2-4-1 Recommended screw fastening order

Table 2-4-2 Mounting torque and heat sink flatness specifications

Item	Condition	Min.	Typ.	Max.	Unit
Mounting torque	Recommended 0.69N·m, Screw : M3	0.59	-	0.78	N·m
Flatness of outer heat sink	Refer Fig.2-4-2	-50	-	100	μm

Note : Recommend to use plain washer (ISO7089-7094) in fastening the screws.

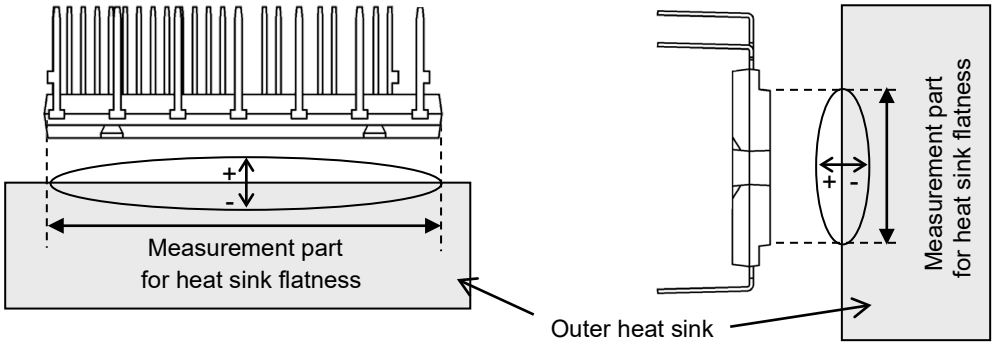

Fig.2-4-2 Measurement point of heat sink flatness

In order to get effective heat dissipation, it is necessary to enlarge the contact area as much as possible to minimize the contact thermal resistance. Regarding the heat sink flatness (warp/concavity and convexity) on the module installation surface, the surface finishing-treatment should be within Rz12.

Evenly apply thermally-conductive grease with 100μ-200μm thickness over the contact surface between a module and a heat sink, which is also useful for preventing corrosion. Furthermore, the grease should be with stable quality and long-term endurance within wide operating temperature range. The contacting thermal resistance between DIPIPM case and heat sink Rth(c-f) is determined by the thickness and the thermal conductivity of the applied grease. For reference, Rth(c-f) is about 0.4K/W (per 1/6 module, grease thickness: 20μm, thermal conductivity: 1.0W/m·k). When applying grease and fixing heat sink, pay attention not to take air into grease. It might lead to make contact thermal resistance worse or loosen fixing in operation.

Pay attention to the selection of thermal conductive grease. The grease thickness after fixing the heatsink may increase due to the properties of the grease (contained filler diameter, viscosity, amount of application and so on). And it may cause increase of contact thermal resistance or package crack. Please contact thermal conductive grease manufacturer for its detailed characteristics.

2.4.3 Soldering Conditions

The recommended soldering condition is mentioned as below.
(Note: The reflow soldering cannot be recommended for DIPIPM.)

(1) Flow (wave) Soldering

DIPIPM is tested on the condition described in Table 2-4-3 about the soldering thermostability, so the recommended conditions for flow (wave) soldering are soldering temperature is up to 265°C and the immersion time is within 11s.

However, the condition might need some adjustment based on flow condition of solder, the speed of the conveyer, the land pattern and the through-hole shape on the PCB, etc. It is necessary to confirm whether it is appropriate or not for your actual PCB finally.

Table 2-4-3 Reliability test specification

Item	Condition
Soldering thermostability	260±5°C, 10±1s

(2) Hand soldering

Since the temperature impressed upon the DIPIPM may change based on the soldering iron types (wattages, shape of soldering tip, etc.) and the land pattern on PCB, the unambiguous hand soldering condition cannot be decided its general recommendation.

As a general requirement of the temperature profile for hand soldering, the temperature of the root of the DIPIPM terminal should be kept 150°C or less for considering glass transition temperature (Tg) of the package molding resin and the thermal withstand capability of internal chips. Therefore, it is necessary to check the DIPIPM terminal root temperature, solderability and so on in your actual PCB, when configure the soldering temperature profile. (It is recommended to set the soldering time as short as possible.)

[Note]
For soldering iron, it is recommended to select one for semiconductor soldering (12~24V low voltage type, and the earthed iron tip) and with temperature adjustment function.

CHAPTER 3 SYSTEM APPLICATION GUIDANCE

3.1 Application Guidance

This chapter states the SLIMDIP application method and interface circuit design hints.

3.1.1 System connection

C1: Electrolytic type with good temperature and frequency characteristics.
Note: the capacitance also depends on the PWM control strategy of the application system
C2:0.01μ-2μF ceramic capacitor with good temperature, frequency and DC bias characteristics
C3:0.1μ-0.22μF Film capacitor (for snubber)
D1:Zener diode 24V/1W for surge absorber

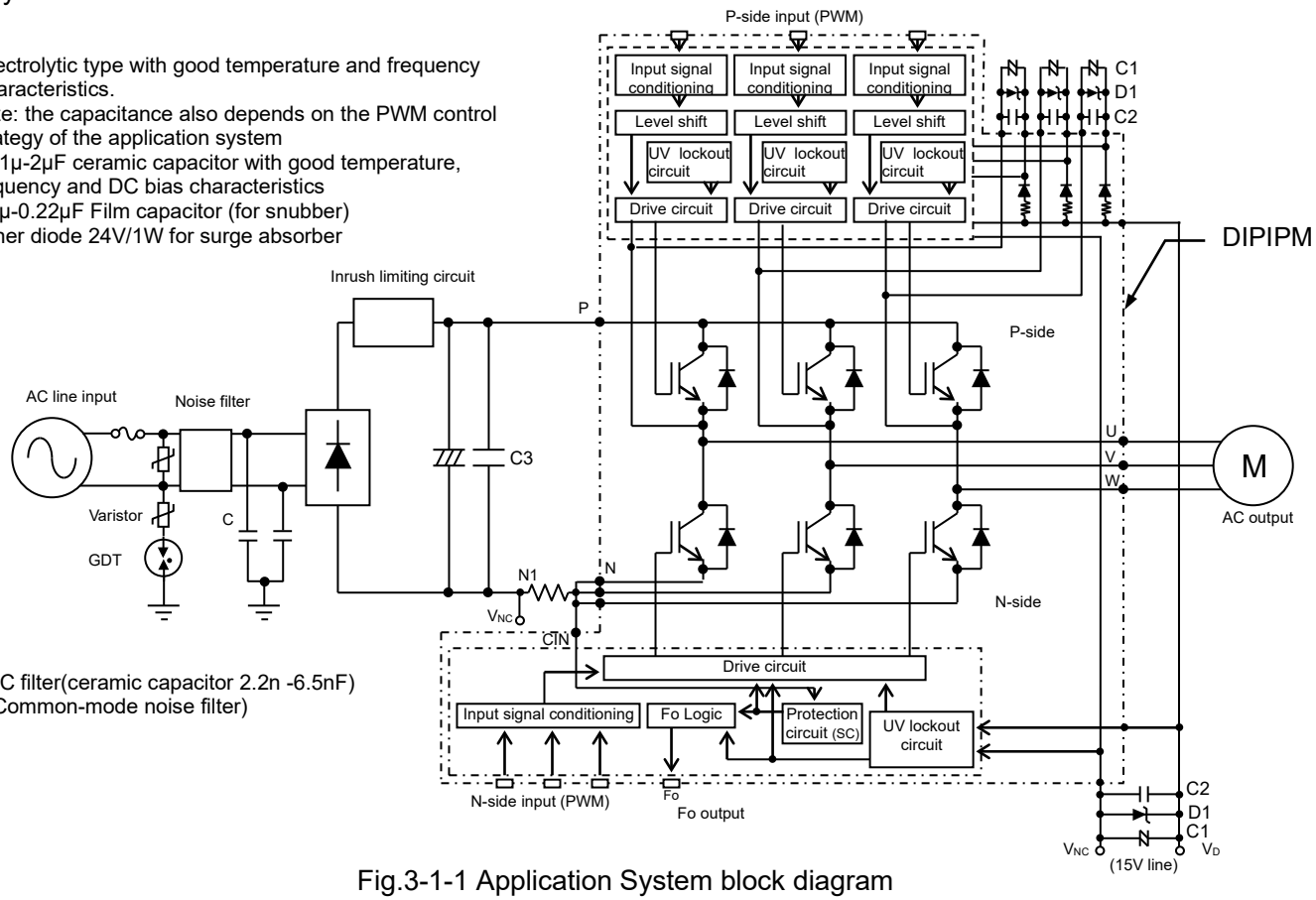

C : AC filter(ceramic capacitor 2.2n -6.5nF)
(Common-mode noise filter)

Fig.3-1-1 Application System block diagram

3.1.2 Interface Circuit (Direct Coupling Interface example for using one shunt resistor)

Fig.3-1-2 shows a typical application circuit of interface schematic, in which control signals are transferred directly input from a controller (e.g. MCU, DSP).

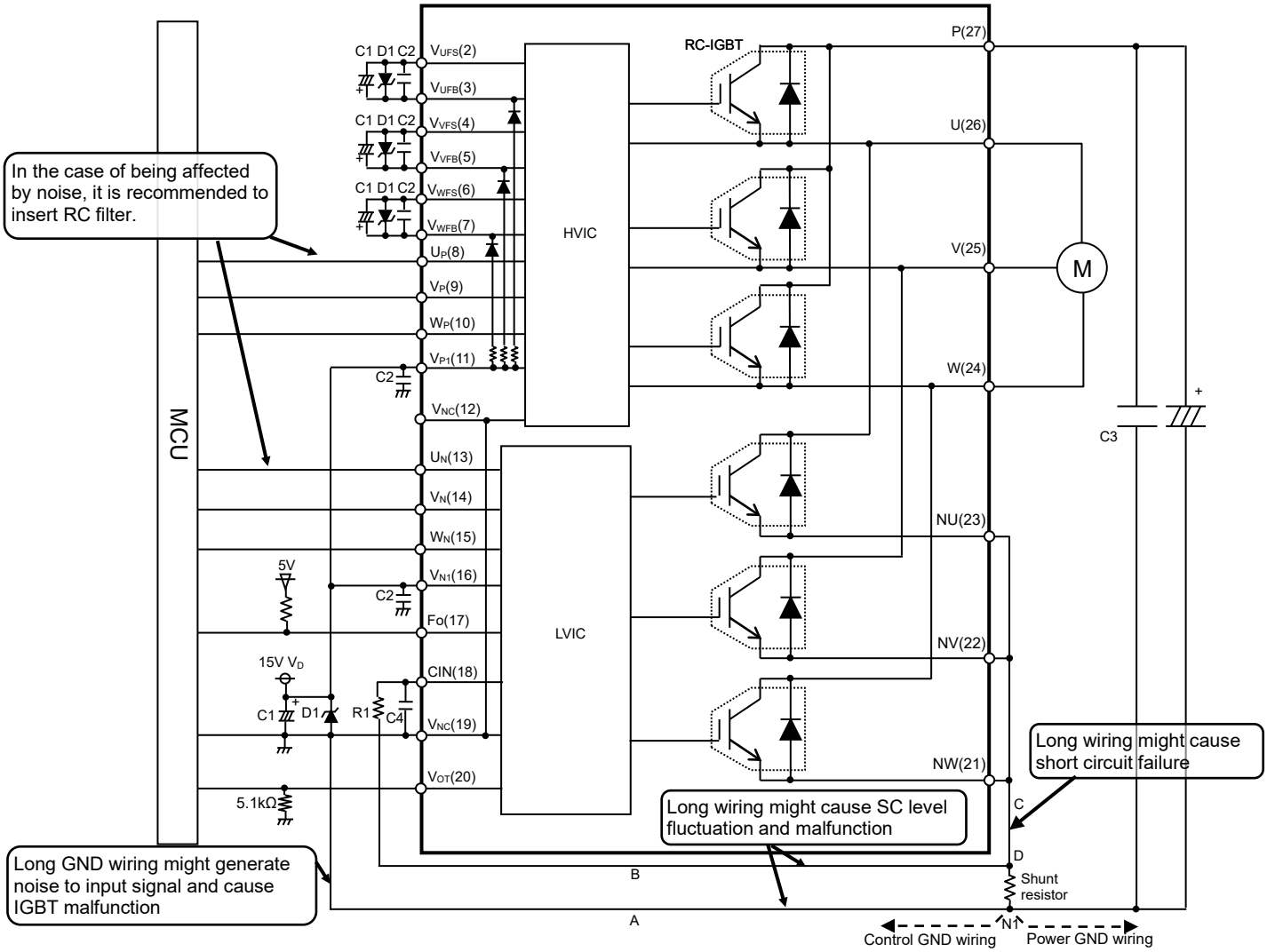

Fig.3-1-2 Interface circuit example in the case of using with one shunt resistor

Note:

(1) If control GND is connected with power GND by common broad pattern, it may cause malfunction by power GND fluctuation. It is recommended to connect control GND and power GND at only a point N1 (near the terminal of shunt resistor).

(2) It is recommended to insert a Zener diode D1(24V/1W) between each pair of control supply terminals to prevent surge destruction.

(3) To prevent surge destruction, the wiring between the smoothing capacitor and the P, N1 terminals should be as short as possible. Generally a snubber capacitor C3 (more than 0.1μF) between the P-N1 terminals is recommended. C3 capacitor value should be selected by enough system evaluation.

(4) R1, C4 of RC filter for preventing protection circuit malfunction is recommended to select tight tolerance, temp-compensated type. The time constant R1C4 should be set so that SC current is shut down within 2μs. (1.5μs~2μs is general value.) SC interrupting time might vary with the wiring pattern, so the enough evaluation on the real system is necessary.

(5) To prevent malfunction, the wiring of A, B, C should be as short as possible.

(6) The point D at which the wiring to CIN filter is divided should be near the terminal of shunt resistor. NU, NV, NW terminals should be connected at near NU, NV, NW terminals.

(7) All capacitors should be mounted as close to the terminals as possible. (C1: good temperature, frequency characteristic electrolytic type and C2:0.01μ-2μF, good temperature, frequency and DC bias characteristic ceramic type are recommended.)

(8) Input drive is High-active type. There is a minimum 3.3kΩ pull-down resistor in the input circuit of IC. To prevent malfunction, the wiring of each input should be as short as possible. When using RC coupling circuit, make sure the input signal level meet the turn-on and turn-off threshold voltage.

(9) Thanks to built-in HVIC, direct coupling to MCU without any optocoupler or transformer isolation is possible.

(10) Fo output is open drain type. It should be pulled up to MCU or control power supply (e.g. 5V,15V) by a resistor that makes I_{Fo} up to 1mA. (I_{FO} is estimated roughly by the formula of control power supply voltage divided by pull-up resistance. In the case of pulled up to 5V, 10kΩ (5kΩ or more) is recommended.)

(11) Two V_{NC} terminals are connected inside DIPIPM, please connect either one to the 15V power supply GND outside and leave another one open.

(12) If high frequency noise superimposed to the control supply line, IC malfunction might happen and cause DIPIPM erroneous operation. To avoid such problem, line ripple voltage should meet dV/dt ≤+/-1V/μs, Vripple≤2Vp-p.

3.1.3 Interface Circuit (Example of Opto-coupler Isolated Interface)

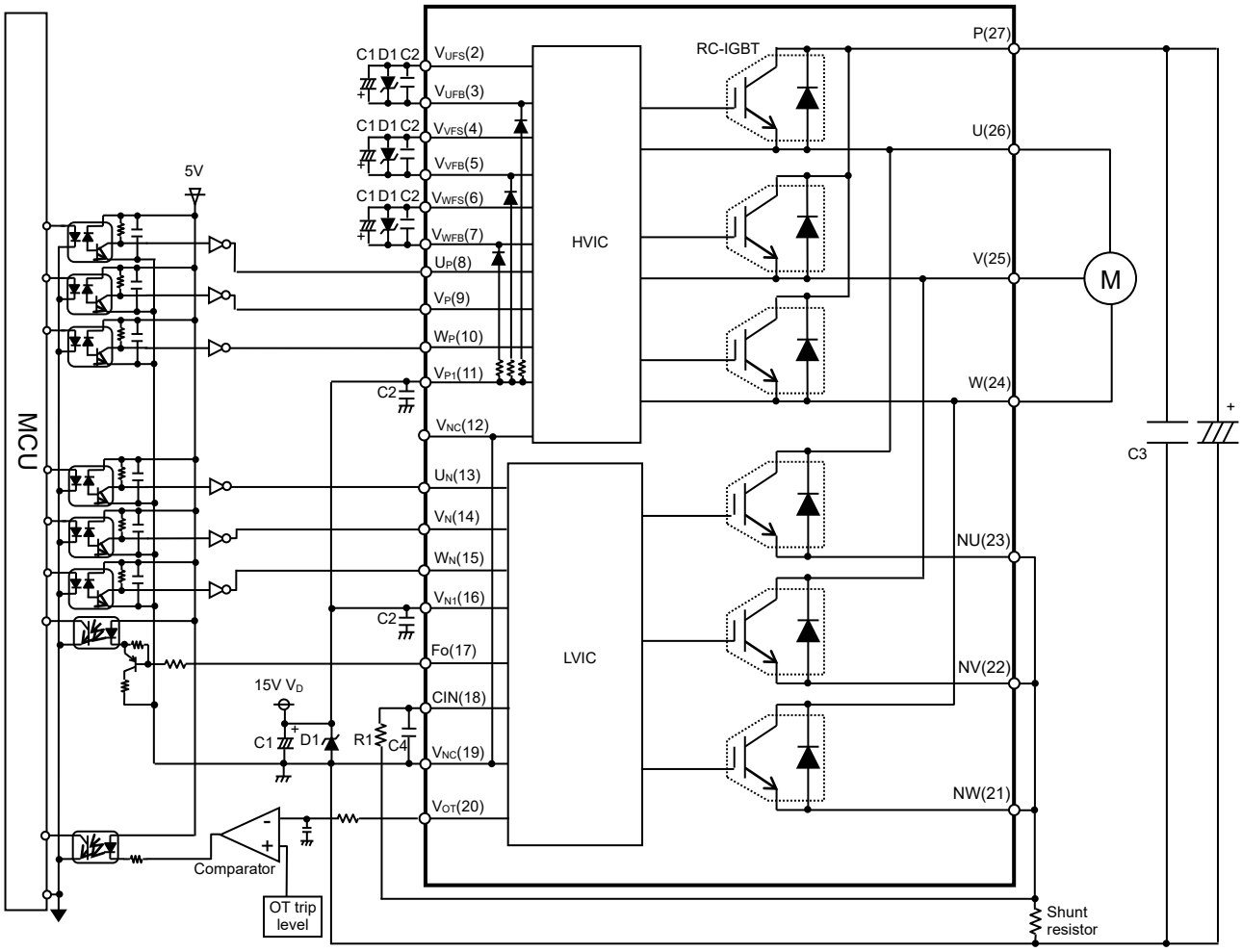

Fig.3-1-3 Interface circuit example with opto-coupler

Note:
(1) High speed (high CMR) opto-coupler is recommended.
(2) Fo terminal sink current for inverter part is max.1mA.
(3) About comparator circuit at V_{OT} output, it is recommended to design the input circuit with hysteresis because of preventing output chattering.
(4) In the case that input signal to DIPIPM is affected by noise, it is recommended to insert RC filter. When using RC filter, make sure the input signal level meet the turn-on and turn-off threshold voltage.

3.1.4 External SC Protection Circuit with Using Three Shunt Resistors

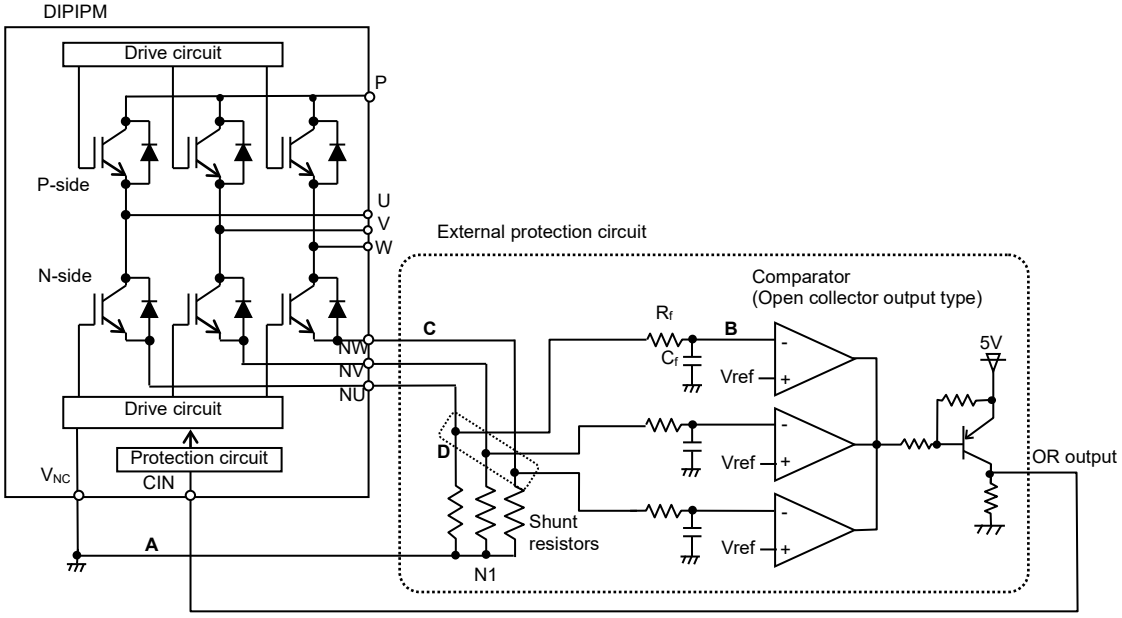

Fig.3-1-4 Interface circuit example

Note:

(1) It is necessary to set the time constant R_fC_f of external comparator input so that IGBT stop within 2μs when short circuit occurs. SC interrupting time might vary with the wiring pattern, comparator speed and so on.
(2) The threshold voltage Vref should be set up the same rating of short circuit trip level (Vsc(ref) typ. 0.48V).
(3) Select the external shunt resistance so that SC trip-level is less than specified value.
(4) To avoid malfunction, the wiring A, B, C should be as short as possible.
(5) The point D at which the wiring to comparator is divided should be near the terminal of shunt resistor.
(6) OR output high level should be over 0.505V (=maximum Vsc(ref)).
(7) GND of Comparator, Vref circuit and Cf should be not connected to noisy power GND but to control GND wiring.

3.1.5 Circuits of Signal Input Terminals and Fo Terminal

(1) Internal Circuit of Control Input Terminals

SLIMDIP is high-active input logic.
A 3.3kΩ(min) pull-down resistor is built-in each input circuits of the SLIMDIP as shown in Fig.3-1-5 , so external pull-down resistor is not needed.
Furthermore, by lowering the turn on and turn off threshold value of input signal as shown in Table 3-1-1, a direct coupling to low voltage microcomputer or DSP becomes possible.

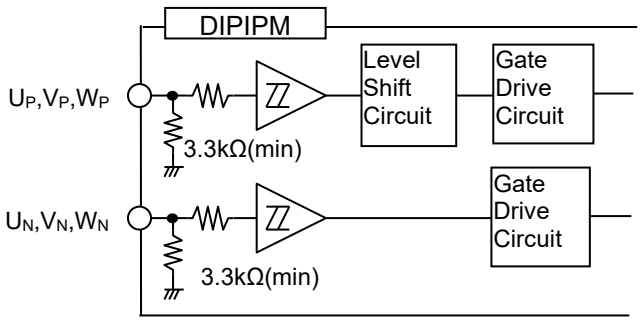

Fig.3-1-5 Internal structure of control input terminals

Table 3-1-1 Input threshold voltage ratings(Tj=25°C)

Item	Symbol	Condition	Min.	Typ.	Max.	Unit
Turn-on threshold voltage	Vth(on)	U_P,V_P,W_P-V_{NC} terminals U_N,V_N,W_N-V_{NC} terminals	-	1.7	2.35	V
Turn-off threshold voltage	Vth(off)		0.7	1.3	-	
Threshold voltage hysterisis	Vth(hys)		0.25	0.40	-	

Note: There are specifications for the minimum input pulse width in SLIMDIP. DIPIPM might make no response if the input signal pulse width (both on and off) is less than the specified value. Please refer to the datasheet for the specification.

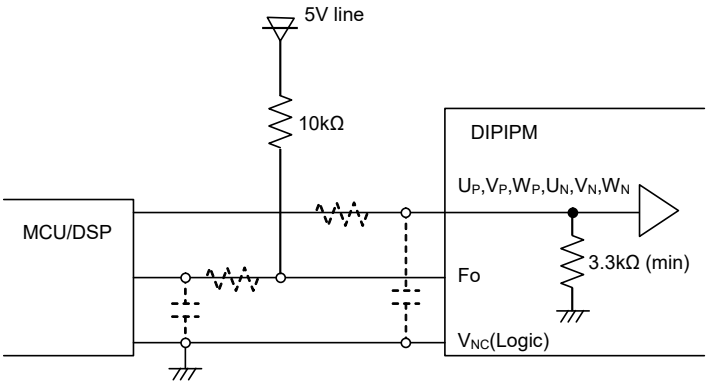

Fig.3-1-6 Control input connection

Note: The RC coupling (parts shown in the dotted line) at each input depends on user's PWM control strategy and the wiring impedance of the printed circuit board.
The DIPIPM signal input section integrates a 3.3kΩ(min) pull-down resistor. Therefore, when using an external filtering resistor, please pay attention to the signal voltage drop at input terminal.

(2) Internal Circuit of Fo Terminal

F_O terminal is an open drain type, it should be pulled up to a 5V supply as shown in Fig.3-1-6. Fig.3-1-7 shows the typical V-I characteristics of Fo terminal. The maximum sink current of Fo terminal is 1mA. If opto-coupler is applied to this output, please pay attention to the opto-coupler drive ability.

Table 3-1-2 Electric characteristics of Fo terminal

Item	Symbol	Condition	Min.	Typ.	Max.	Unit
Fault output voltage	V_{FOH}	V_{SC}=0V,Fo=10kΩ,5V pulled-up	4.9	-	-	V
	V_{FOL}	V_{SC}=1V,Fo=1mA	-	-	0.95	V

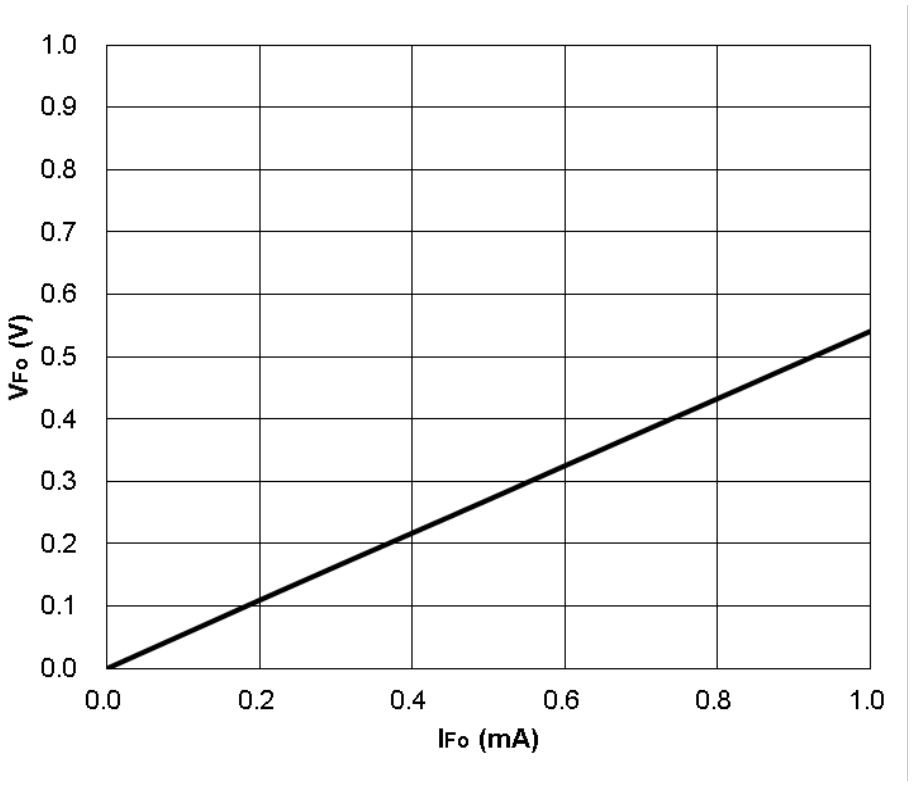

Fig.3-1-7 Fo terminal typical V-I characteristics (V_D=15V, T_j=25°C)

3.1.6 Snubber Circuit

In order to prevent DIPIPM from destruction by extra surge, the wiring length between the smoothing capacitor and DIPIPM P terminal - N1 points (shunt resistor terminal) should be as short as possible. Also, a 0.1μ~0.22μF / 630V snubber capacitor should be mounted in the DC-link and near to P, N1.

There are two positions ((1)or(2)) to mount a snubber capacitor as shown in Fig.3-1-8. Snubber capacitor should be installed in the position (2) so as to suppress surge voltage effectively. However, the charging and discharging currents generated by the wiring inductance and the snubber capacitor will flow through the shunt resistor, which might cause erroneous protection if this current is large enough.

In order to suppress the surge voltage maximally, the wiring at part-A (including shunt resistor parasitic inductance) should be as small as possible. A better wiring example is shown in location (3).

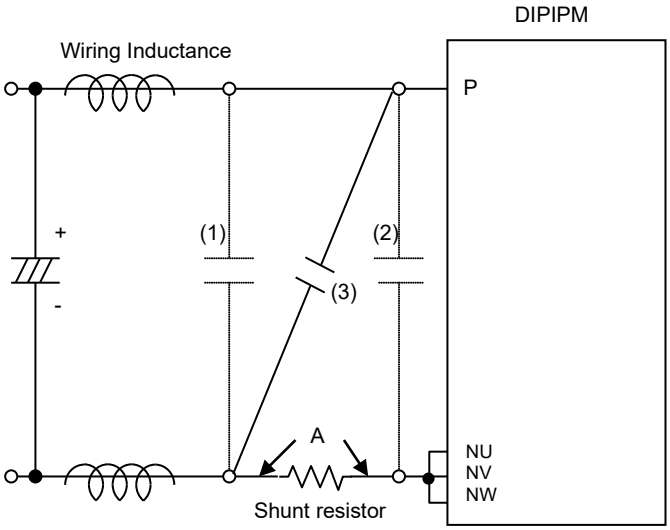

Fig.3-1-8 Recommended snubber circuit location

3.1.7 Recommended Wiring Method around Shunt Resistor

External shunt resistor is employed to detect short-circuit accident. A longer wiring between the shunt resistor and DIPIPM causes so much large surge that might damage built-in IC. To decrease the pattern inductance, the wiring between the shunt resistor and DIPIPM should be as short as possible and using low inductance type resistor such as SMD resistor instead of long-lead type resistor.

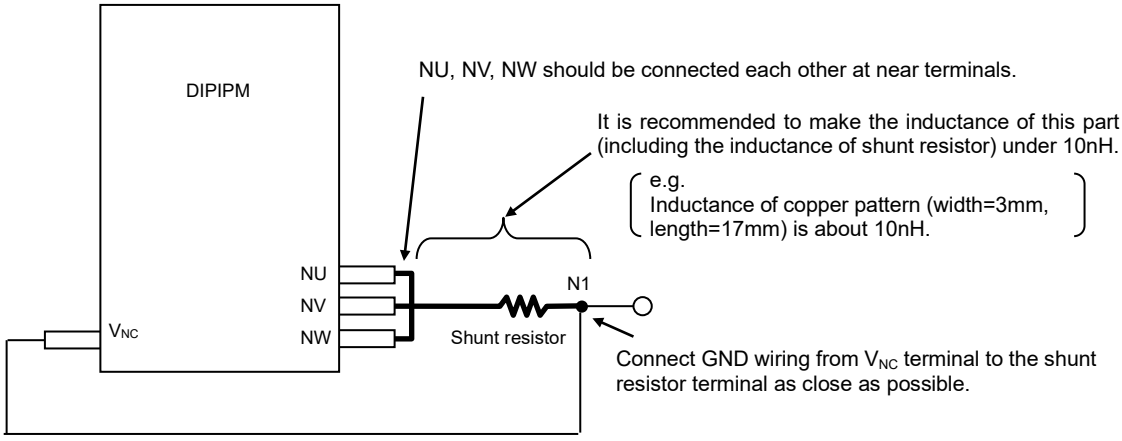

Fig.3-1-9 Wiring instruction (In the case of using with one shunt resistor)

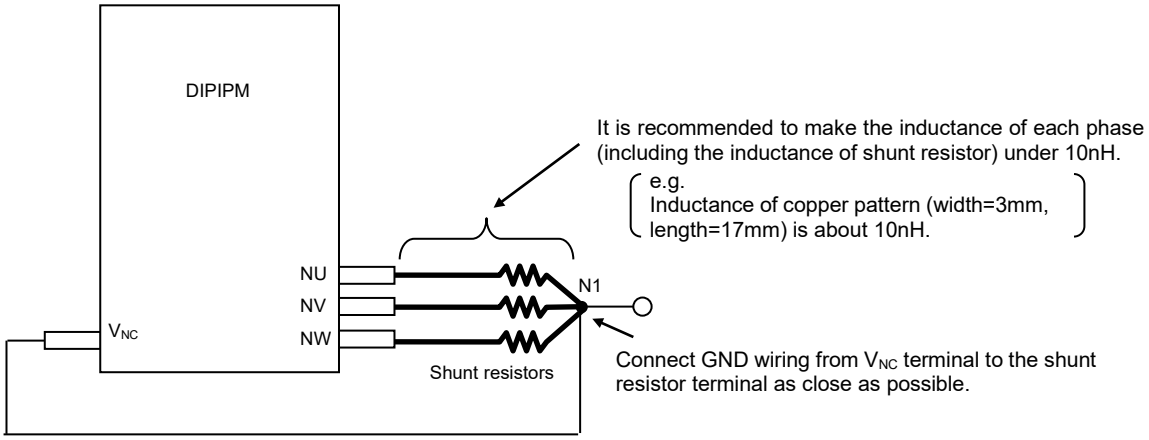

Fig.3-1-10 Wiring instruction (In the case of using with three shunt resistor)

Influence of pattern wiring around the shunt resistor is shown below.

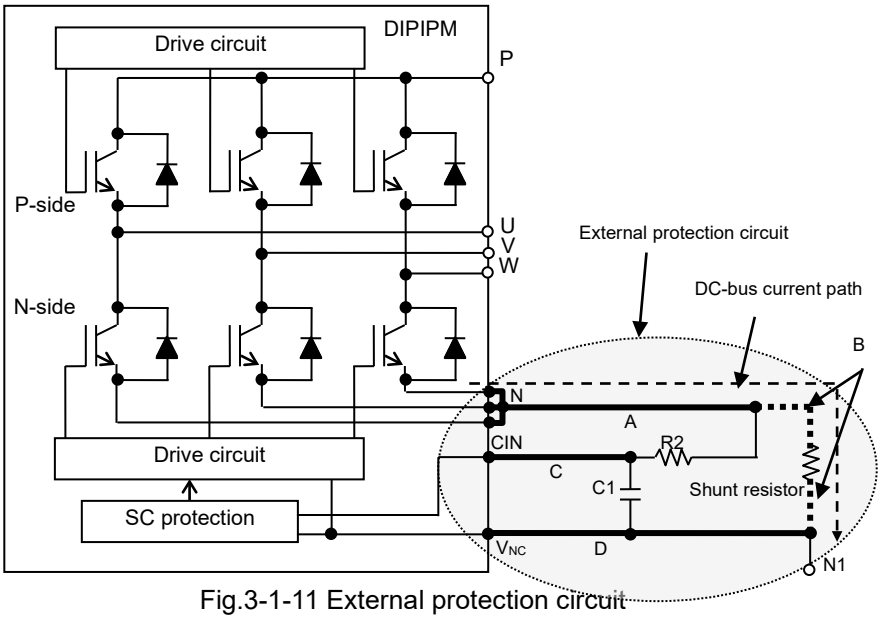

Fig.3-1-11 External protection circuit

(1) Influence of the part-A wiring

The ground of N-side IGBT gate is V_{NC}. If part-A wiring pattern in Fig.3-1-11 is too long, extra voltage generated by the wiring parasitic inductance will result the potential of IGBT emitter variation during switching operation. Please install shunt resistor as close to the N terminal as possible.

(2) Influence of the part-B wiring

The part-B wiring affects SC protection level. SC protection works by detecting the voltage of the CIN terminals. If part-B wiring is too long, extra surge voltage generated by the wiring inductance will lead to deterioration of SC protection level. It is necessary to connect CIN and V_{NC} terminals directly to the two ends of shunt resistor and avoid long wiring.

(3) Influence of the part-C wiring pattern

C1R2 filter is added to remove noise influence occurring on shunt resistor. Filter effect will dropdown and noise will easily superimpose on the wiring if part-C wiring is too long. It is necessary to install the C1R2 filter near CIN, V_{NC} terminals as close as possible.

(4) Influence of the part-D wiring pattern

Part-D wiring pattern gives influence to all the items described above, maximally shorten the GND wiring is expected.

3.1.8 Precaution for Wiring on PCB

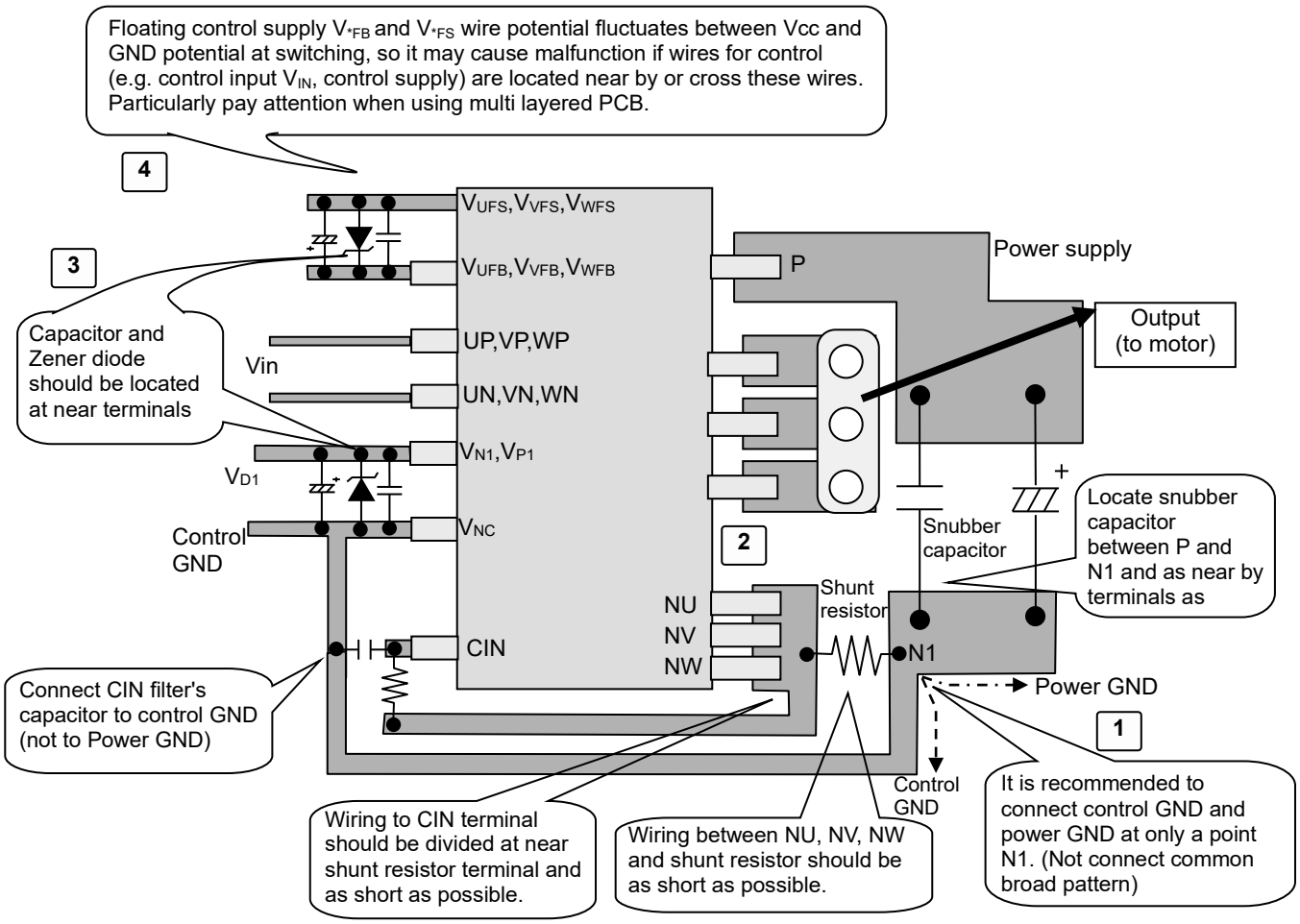

Fig.3-1-12 Precaution for wiring on PCB

The case example of trouble due to PCB pattern

	Case example	Matter of trouble
1	•Control GND pattern overlaps power GND pattern.	The surge, generated by the wiring pattern and di/dt of noncontiguous big current flows to power GND, transfers to control GND pattern. It causes the control GND level fluctuation, so that the input signal based on the control GND fluctuates too. Then the arm short might occur.
	•Ground loop pattern exists.	Stray current flows to GND loop pattern, so that the control GND level and input signal level (based on the GND) fluctuates. Then the arm short might occur.
2	•Large inductance of wiring between N and N1 terminal	Long wiring pattern has big parasitic inductance and generates high surge when switching. This surge causes the matter as below. •HVIC malfunction due to VS voltage (output terminal potential) dropping excessively. •LVIC surge destruction
3	Capacitors or zener diodes are nothing or located far from the terminals.	IC surge destruction or malfunction might occur.
4	The input lines are located parallel and close to the floating supply lines for P-side drive.	Cross talk noise might be transferred through the capacitance between these floating supply lines and input lines to DIPIPM. Then incorrect signals are input to DIPIPM input, and arm short (short circuit) might occur.

3.1.9 Parallel operation of DIPIPM

Fig.3-1-13 shows the circuitry of parallel connection of two DIPIPMs. Route (1) and (2) indicate the gate charging path of low-side IGBT in DIPIPM No.1 & 2 respectively. In the case of DIPIPM 1, the parasitic inductance becomes large by long wiring and it might have a negative effect on DIPIPM's switching operation. (Charging operation of bootstrap capacitor for high-side might be affected too.) Also, such a wiring makes DIPIPM be affected by noise easily, then it might lead to malfunction. If more DIPIPMs are connected in parallel, GND pattern becomes longer and the influence to other circuit (protection circuit etc.) by the fluctuation of GND potential is conceivable, therefore parallel connection is not recommended.

Because DIPIPM doesn't consider the fluctuation of characteristics between each phase definitely, it cannot be recommended to drive same load by parallel connection with other phase IGBT or IGBT of other DIPIPM.

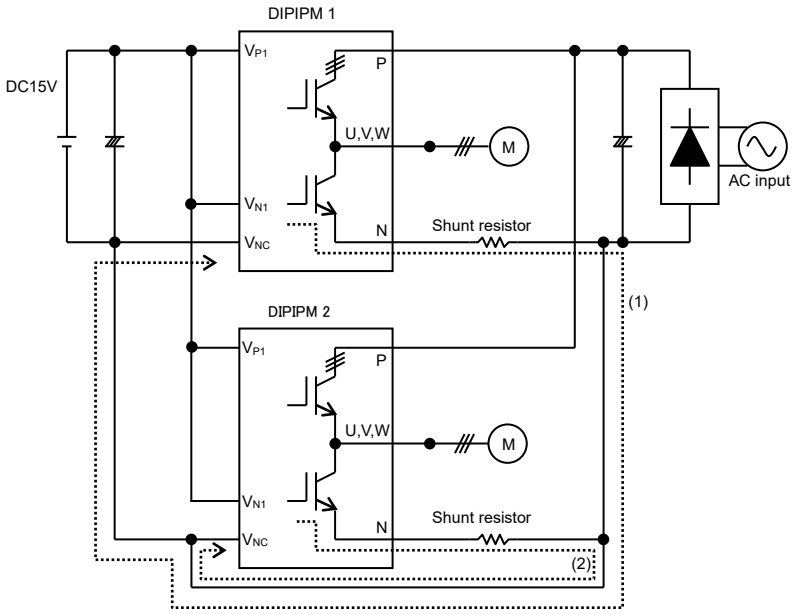

Fig.3-1-13 Parallel operation

3.1.10 SOA of SLIMDIP

The following describes the SOA (Safety Operating Area) of the SLIMDIP.

V_{CES} : Maximum rating of IGBT collector-emitter voltage

V_{CC} : Supply voltage applied on P-N terminals

$V_{CC(surge)}$: Total amount of V_{CC} and surge voltage generated by the wiring inductance and the DC-link capacitor.

$V_{CC(PROT)}$: DC-link voltage that DIPIPM can protect itself.

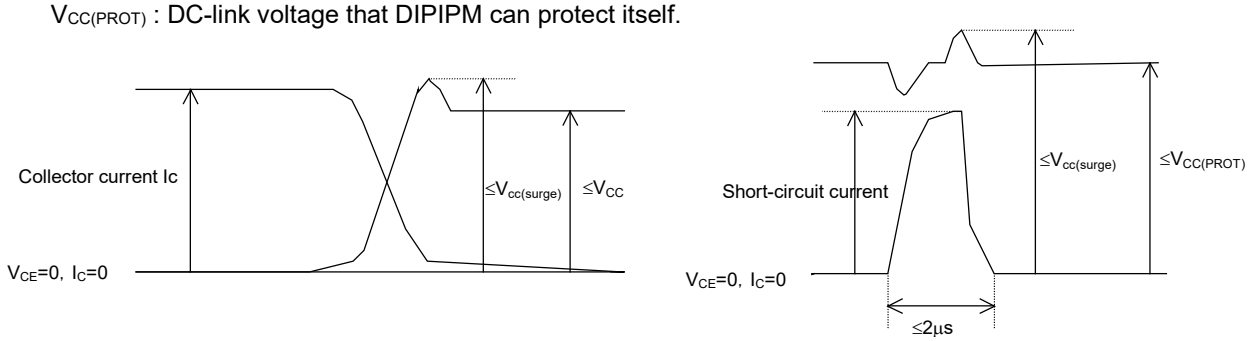

Fig.3-1-14 SOA at switching mode and short-circuit mode

<u>In Case of switching</u>

V_{CES} represents the maximum voltage rating (600V) of the IGBT. By subtracting the surge voltage (100V or less) generated by internal wiring inductance from V_{CES} is $V_{CC(surge)}$, that is 500V. Furthermore, by subtracting the surge voltage (50V or less) generated by the wiring inductor between DIPIPM and DC-link capacitor from $V_{CC(surge)}$ derives V_{CC}, that is 450V.

<u>In Case of Short-circuit</u>

V_{CES} represents the maximum voltage rating (600V) of the IGBT. By Subtracting the surge voltage (100V or less) generated by internal wiring inductor from V_{CES} is $V_{CC(surge)}$, that is, 500V. Furthermore, by subtracting the surge voltage (100V or less) generated by the wiring inductor between the DIPIPM and the electrolytic capacitor from $V_{CC(surge)}$ derives V_{CC}, that is, 400V.

3.1.11 SCSOA

Fig.3-1-15~18 show the typical SCSOA and performance curves of SLIMDIP-S, -M, -L, -W, -X, and -Z.
Fig.3-1-15 is the SCSOA and performance curves for SLIMDIP-S at different control power supply. For example, the collector current conducts about nine times the rated current at V_D=16.5 and SLIMDIP-S is able to shutdown safely in case of following condition when conducting period is less than about 2.8μs.
These data are typical values. Since the SCSOA operation area may vary with the control supply voltage, DC-link voltage, and the other circumstances, it is necessary to set time constant of RC filter with a margin.

Test condition:
Vcc=400V, Tj=125°C at initial state, Vcc(surge)≤500V(surge included), non-repetitive,2m load.

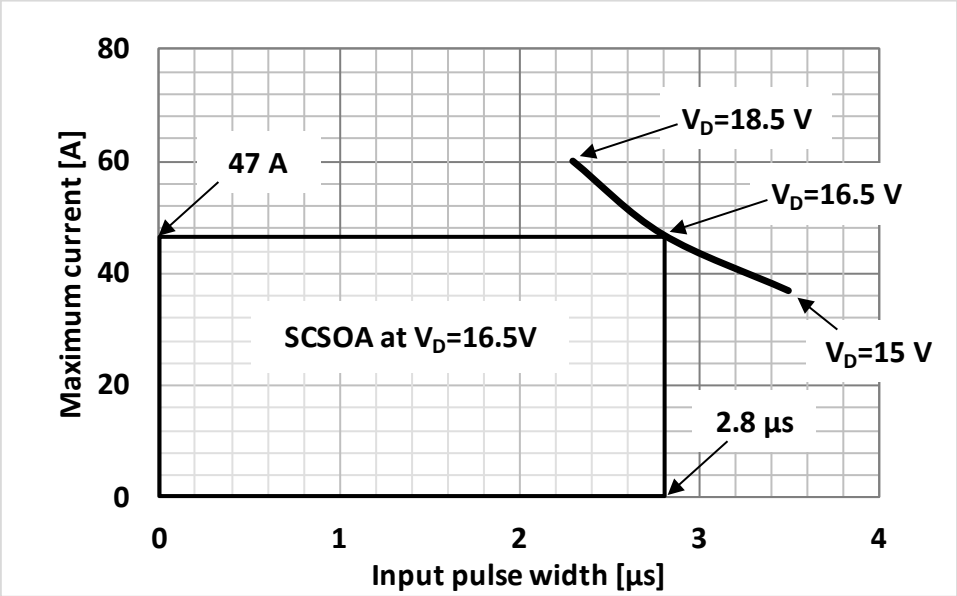

Fig.3-1-15 Typical SCSOA curve of SLIMDIP-S

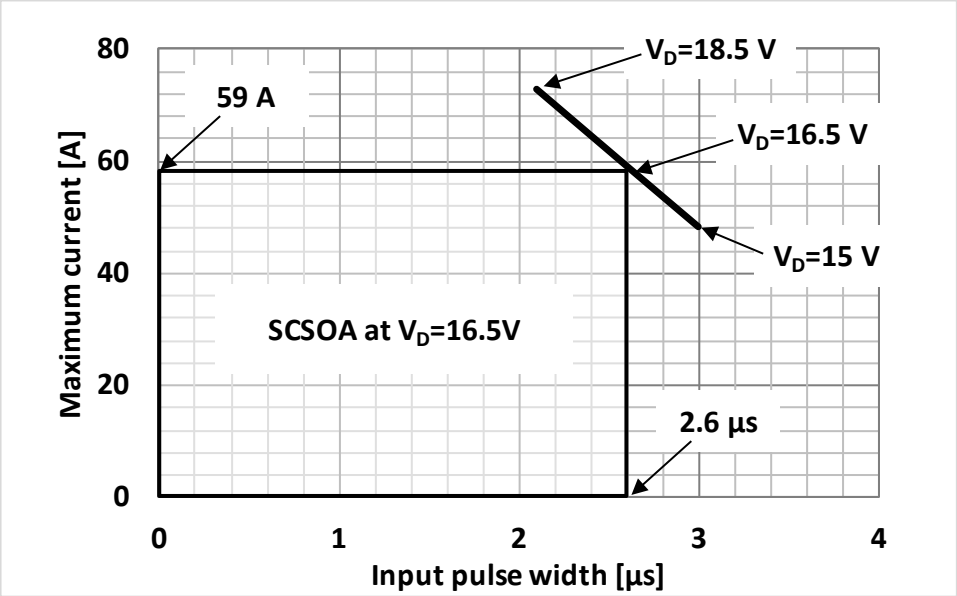

Fig.3-1-16 Typical SCSOA curve of SLIMDIP-M

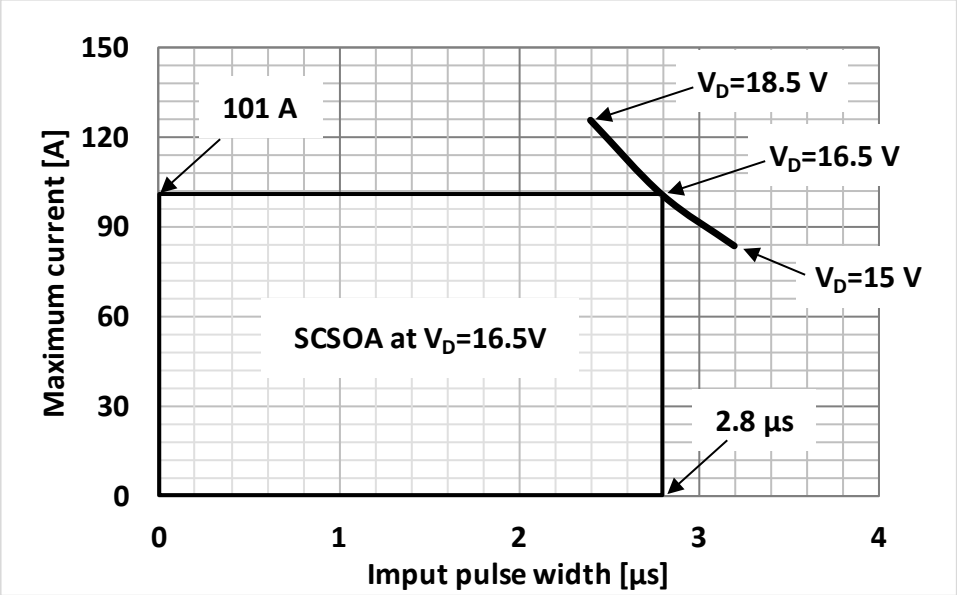

Fig.3-1-17 Typical SCSOA curve of SLIMDIP-L and -W

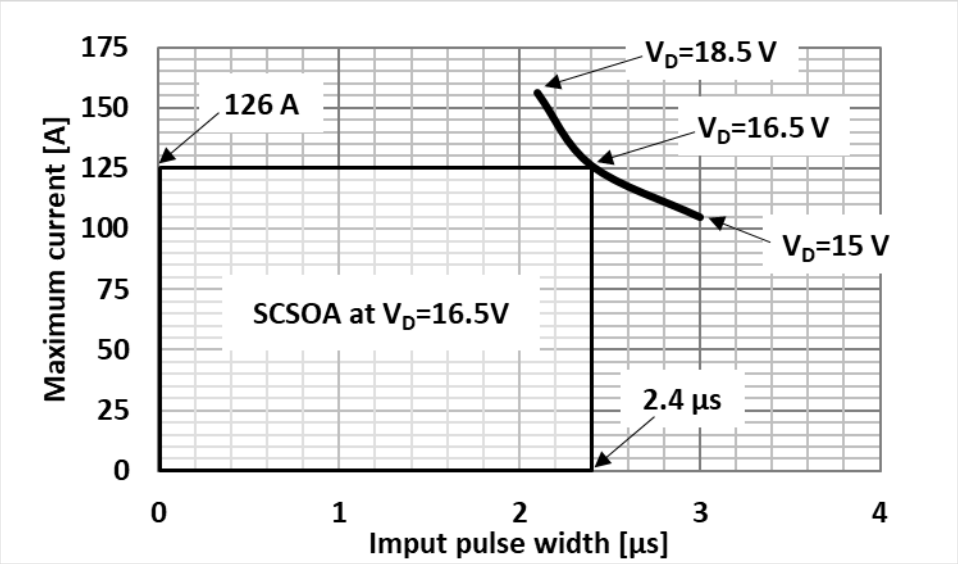

Fig.3-1-18 Typical SCSOA curve of SLIMDIP-X

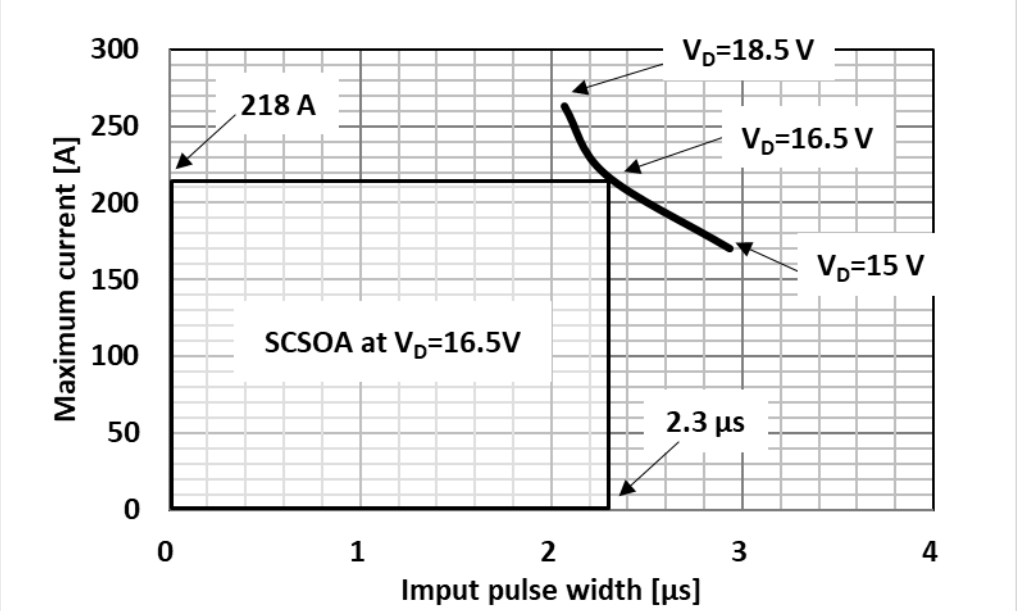

Fig.3-1-19 Typical SCSOA curve of SLIMDIP-Z

3.1.12 Power Life Cycles

When SLIMDIP is in operation, repetitive temperature variation will happens on the IGBT junctions (ΔTj). The amplitude and the times of the junction temperature variation affect the device lifetime. Fig.3-1-17 shows the IGBT power cycle curve as a function of average junction temperature variation (ΔTj).

(The curve is a regression curve based on 3 points of ΔTj=46, 88, 98K with regarding to failure rate of 0.1%, 1% and 10%. These data are obtained from the reliability test of intermittent conducting operation)

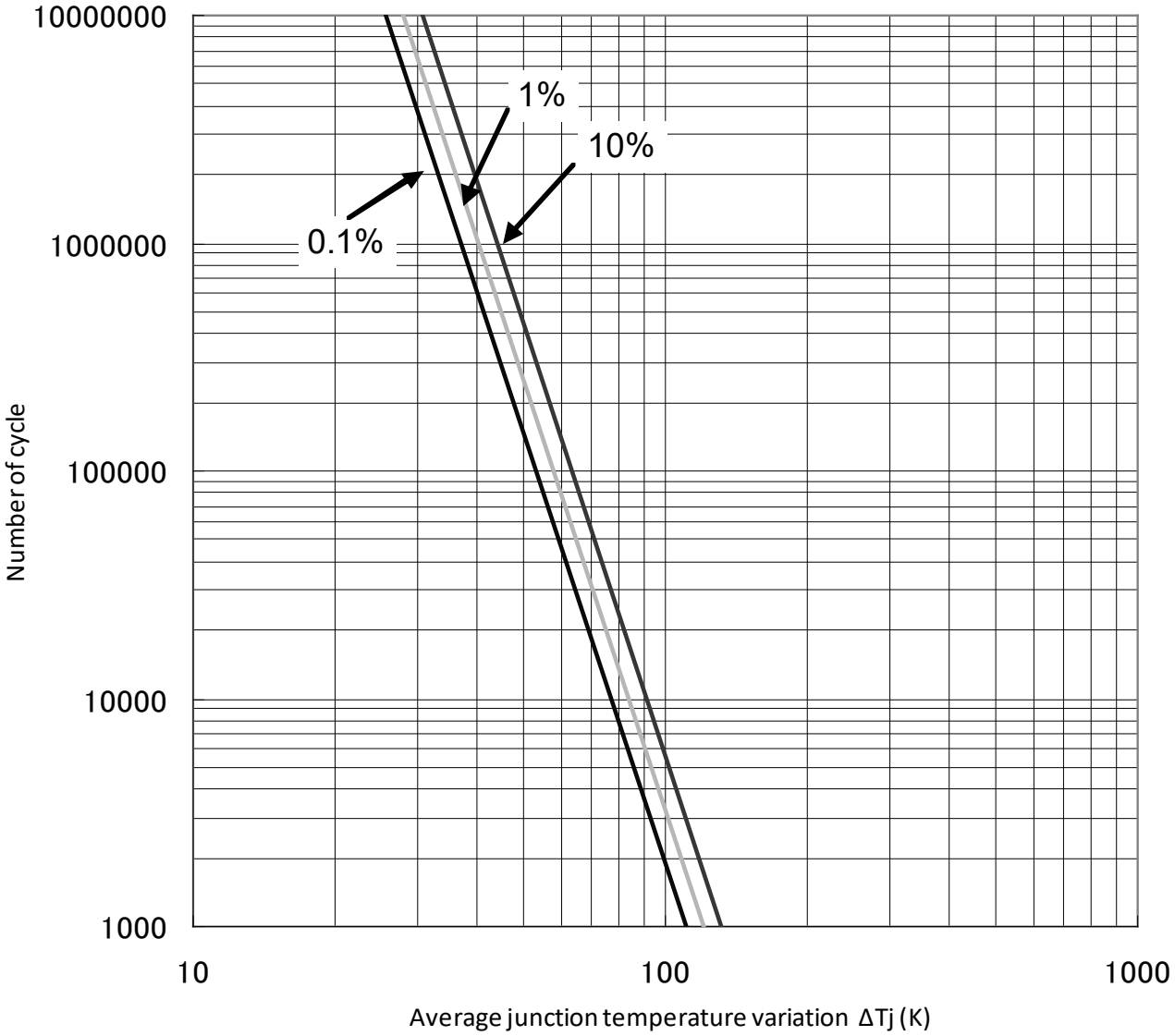

Fig.3-1-20 Power cycle curve

3.2 Power Loss and Thermal Dissipation Calculation

3.2.1 Power Loss Calculation

Simple expressions for calculating average power loss are given below:

As SLIMDIP applies RC-IGBT which integrates IGBT and FWDi on one chip die, it is necessary for loss and temperature estimation to consider the sum of IGBT and FWDi losses.

● Scope

The power loss calculation intends to provide users a way of selecting a matched power device for their VVVF inverter application. However, it is not expected to use for limit thermal dissipation design.

● Assumptions

(1) PWM controlled VVVF inverter with sinusoidal output;
(2) PWM signals are generated by the comparison of sine waveform and triangular waveform.
(3) Duty amplitude of PWM signals varies between $\frac{1-D}{2} \sim \frac{1+D}{2}$ (%/100), (D: modulation depth).
(4) Output current various with Icp·sinx and it does not include ripple.
(5) Power factor of load output current is cosθ, ideal inductive load is used for switching.

● Expressions Derivation

PWM signal duty is a function of phase angle x as $\frac{1+D\times\sin x}{2}$ which is equivalent to the output voltage variation. From the power factor cosθ, the output current and its corresponding PWM duty at any phase angle x can be obtained as below:

$$Output\ current = Icp \times \sin x$$

$$PWM\ \ Duty = \frac{1 + D \times \sin(x+\theta)}{2}$$

Then, $V_{CE(sat)}$ and V_{EC} at the phase x can be calculated by using a linear approximation:

$$Vce(sat) = Vce(sat)(@\,Icp \times \sin x)$$
$$Vec = (-1) \times Vec(@\,Iecp(= Icp) \times \sin x)$$

Thus, the static loss of IGBT is given by:

$$\frac{1}{2\pi}\int_0^{\pi}(Icp \times \sin x) \times Vce(sat)(@\,Icp \times \sin x) \times \frac{1 + D\sin(x+\theta)}{2} \bullet dx$$

Similarly, the static loss of free-wheeling diode is given by:

$$\frac{1}{2\pi}\int_{\pi}^{2\pi}((-1) \times Icp \times \sin x)((-1) \times Vec(@\,Icp \times \sin x) \times \frac{1 + D\sin(x+\theta)}{2} \bullet dx$$

On the other hand, the dynamic loss of IGBT, which does not depend on PWM duty, is given by:

$$\frac{1}{2\pi}\int_0^{\pi}(Psw(on)(@\,Icp \times \sin x) + Psw(off)(@\,Icp \times \sin x)) \times fc \bullet dx$$

FWDi recovery characteristics can be approximated by the ideal curve shown in Fig.3-2-1, and its dynamic loss can be calculated by the following expression:

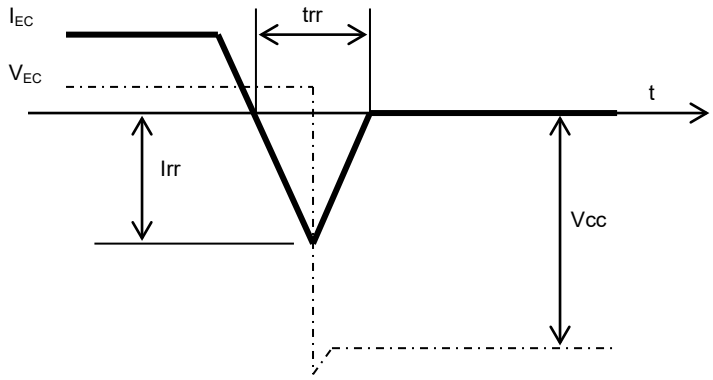

Fig.3-2-1 Ideal FWDi recovery characteristics curve

$$Psw = \frac{Irr \times Vcc \times trr}{4}$$

Recovery occurs only in the half cycle of the output current, thus the dynamic loss is calculated by:

$$\frac{1}{2}\int_{\pi}^{2\pi} \frac{Irr(@Icp \times \sin x) \times Vcc \times trr(@Icp \times \sin x)}{4} \times fc \bullet dx$$
$$= \frac{1}{8}\int_{\rho}^{2\pi} Irr(@Icp \times \sin x) \times Vcc \times trr(@Icp \times \sin x) \times fc \bullet dx$$

- Attention of applying the power loss simulation for inverter designs
  - Divide the output current period into fine-steps and calculate the losses at each step based on the actual values of PWM duty, output current, $V_{CE(sat)}$, V_{EC}, and Psw corresponding to the output current. The worst condition is most important.
  - PWM duty depends on the signal generating way.
  - The relationship between output current waveform or output current and PWM duty changes with the way of signal generating, load, and other various factors. Thus, calculation should be carried out on the basis of actual waveform data.
  - $V_{CE(sat)}$,V_{EC} and Psw(on, off) should be the values at Tj=125°C.

3.2.2 Temperature Rise Considerations and Calculation Example

Fig.3-2-2 shows the typical characteristics of allowable motor rms current versus carrier frequency under the following inverter operating conditions based on power loss simulation results.

Conditions: V_{CC}=300V, V_D=V_{DB}=15V, $V_{CE(sat)}$=Typ., Switching loss=Typ., Tj=125°C, Tc=100°C, Rth(j-c)=Max., P.F=0.8, 3-phase PWM modulation, 60Hz sine waveform output

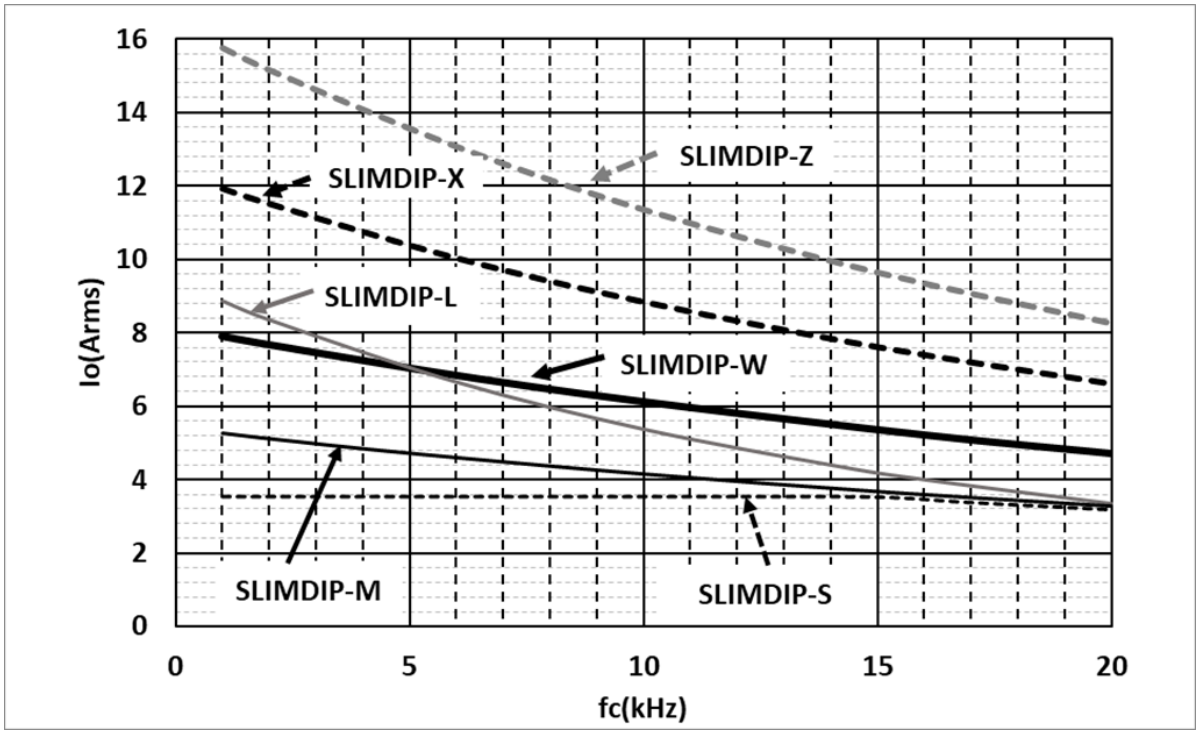

Fig.3-2-2 Effective current-carrier frequency characteristic s(Typical)

Fig.3-2-2 shows an example of estimating allowable inverter output rms current under different carrier frequency and permissible maximum operating temperature condition (Tc=100°C. Tj=125°C). It is necessary to design enough margin because this results may change for different control strategy, motor types, loss variation and thermal interference by different cooling condition. Anyway please ensure that there is no large current over device rating flowing continuously.

The Inverter loss can be calculated by the free power loss simulation software. The software will be downloaded at Mitsubishi Electric web site later. URL: http://www.mitsubishielectric.com/semiconductors/

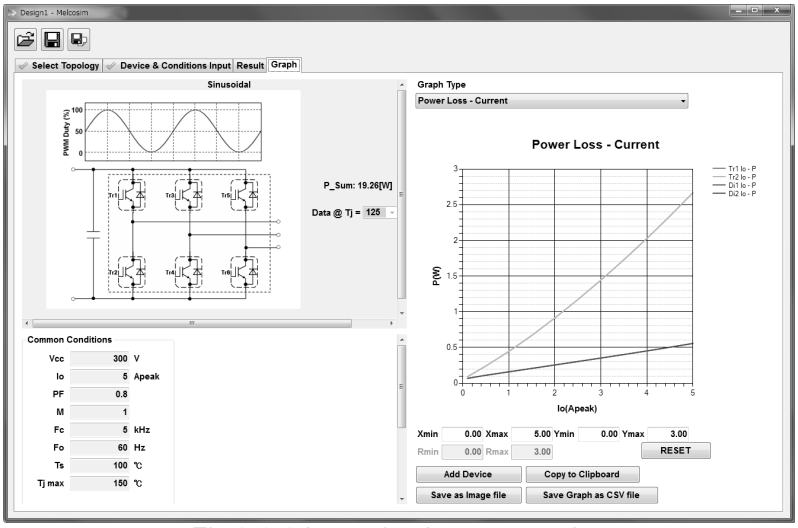

Fig.3-2-3 Loss simulator screen image

3.2.3 Installation of thermocouple

Installation of thermocouple for measurement of DIPIPM case temperature is shown below.

Point for installing thermocouple in heat sink is shown in Fig.3-2-4. In some control schemes, temperature measurement point at the following may not be highest case temperature. In such cases, it is necessary to change the measurement point to that under the highest power chip. (Refer previous figure of power chip position.)

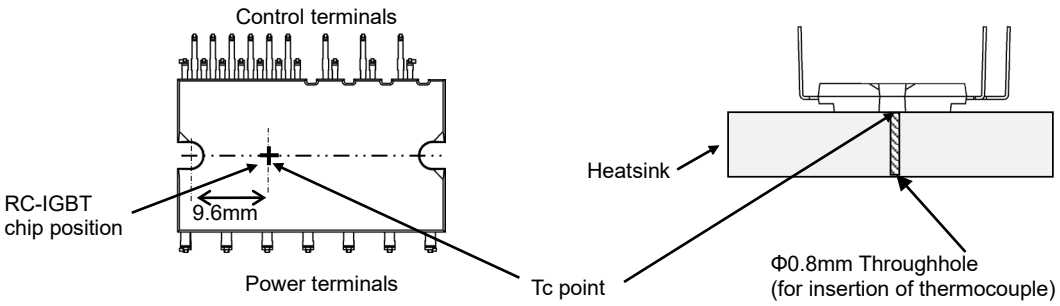

Fig. 3-2-4 Point for installing thermocouple in external heat sink

Installation of thermocouple is shown in Fig. 3-2-5. After making a hole under the chip with largest loss into the heat sink, the thermocouple is inserted in this hole and fixed by hammering around the hole with a centerpunch. After fixing the thermocouple, please sandpaper the thermocouple installing surface to make flat surface.

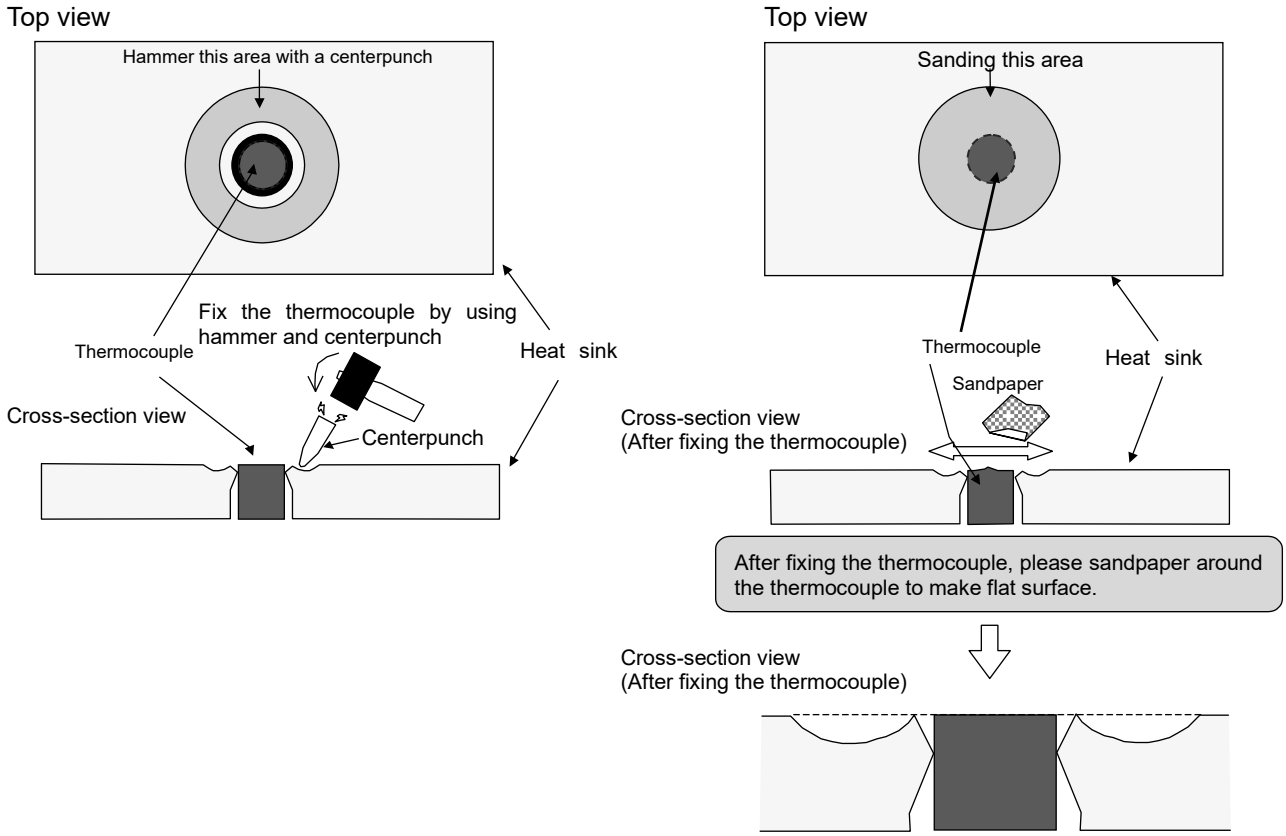

Fig. 3-2-5 Example of installation of thermocouple

3.3 Noise and ESD Withstand Capability

3.3.1 Evaluation Circuit of Noise Withstand Capability

SLIMDIP series have been confirmed to be with over +/- 2.0kV noise withstand capability by the noise evaluation under the conditions shown in Fig.3-3-1. However, noise withstand capability greatly depends on the test environment, the wiring patterns of control substrate, parts layout, and other factors; therefore an additional confirmation on prototype is necessary.

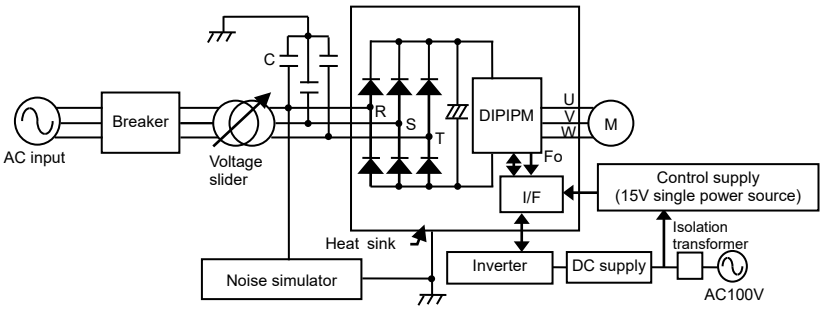

Fig.3-3-1 Noise withstand capability evaluation circuit

Note:

C1: AC line common-mode filter 4700pF, PWM signals are input from microcomputer by using optocouplers, 15V single power supply, Test is performed with IM

Test conditions

V_{CC}=300V, V_D=15V, Ta=25°C, no load

Scheme of applying noise: From AC line (R, S, T), Period T=16ms, Pulse width tw=0.05-1μs, input in random.

3.3.2 Countermeasures and Precautions

DIPIPM improves noise withstand capabilities by means of reducing parts quantity, lowering internal wiring parasitic inductance, and reducing leakage current. But when the noise affects on the control terminals of DIPIPM (due to wiring pattern on PCB), the short circuit or malfunction of SC protection may occur. In that case, below countermeasures are recommended.

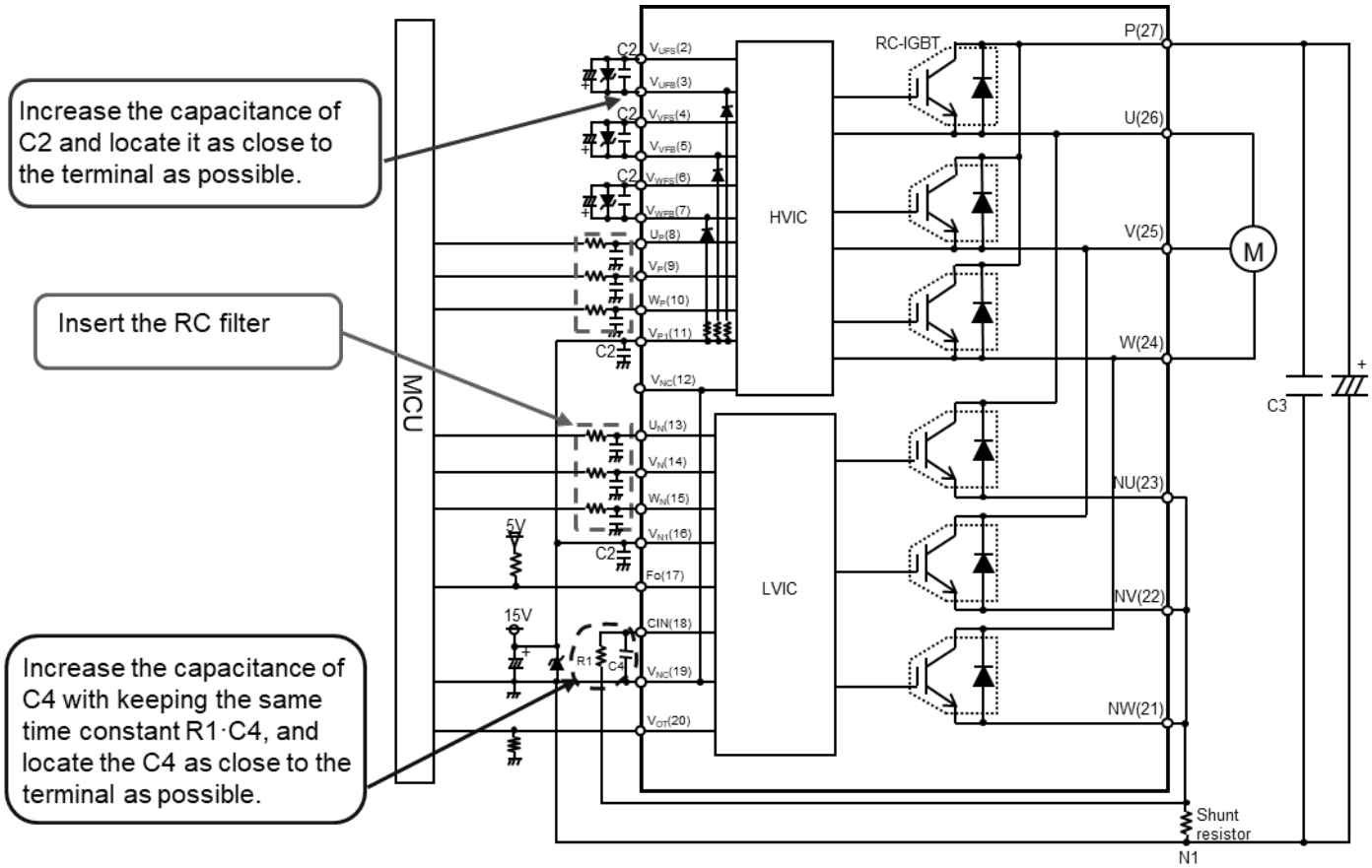

Fig.3-3-2 Example of countermeasures for inverter part

3.3.3 Static Electricity Withstand Capability

DIPIPM has been confirmed to be with +/-1kV or more withstand capability against static electricity by HBM method. The test circuits are shown in following Fig.3-3-3 and 4.

One-shot surge pulse is impressed between each DIPIPM terminals - VNC or N terminals. The I-V characteristics change is checked to judge its destruction. Positive or negative surge voltage is applied at once.

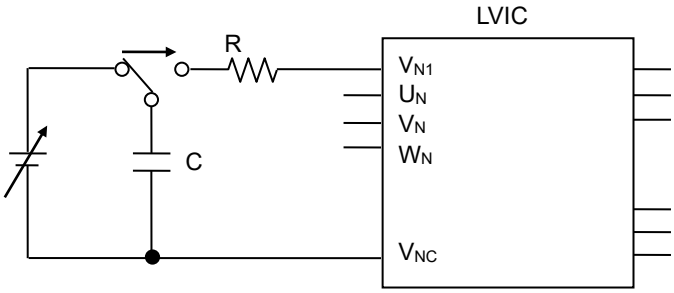

Fig.3-3-3 LVIC terminal Surge Test circuit

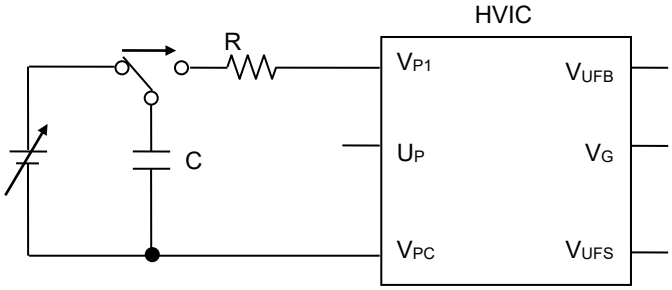

Fig.3-3-4 HVIC terminal Surge Test circuit

CHAPTER 4 Bootstrap Circuit Operation

4.1 Bootstrap Circuit Operation

For three phase inverter circuit driving, normally four isolated control supplies (three for P-side driving and one for N-side driving) are necessary. But using floating control supply with bootstrap circuit can reduce the number of isolated control supplies from four to one (N-side control supply).

Bootstrap circuit consists of a bootstrap diode(BSD), a bootstrap capacitor(BSC) and a current limiting resistor. (SLIMDIP series integrates BSD and limiting resistor and can make bootstrap circuit by adding outer BSC only.) It uses the BSC as a control supply for driving P-side IGBT. The BSC supplies gate charge when P-side IGBT turning ON and circuit current of logic circuit on P-side driving IC (Fig.4-1-2). Since a capacitor is used as substitute for isolated supply, its supply capability is limited. This floating supply driving with bootstrap circuit is suitable for small supply current products like DIPIPM.

Charge consumed by driving circuit is re-charged from N-side 15V control supply to BSC via current limiting resistor and BSD when voltage of output terminal (U, V or W) goes down to GND potential in inverter operation. But there is the possibility that enough charge doesn't perform due to the conditions such as switching sequence, capacitance of BSC and so on. Deficient charge leads to low voltage of BSC and might work under voltage protection (UV). This situation makes the loss of P-side IGBT increase by low gate voltage or stop switching. So it is necessary to consider and evaluate enough for designing bootstrap circuit. For more detail information about driving by the bootstrap circuit, refer the DIPIPM application note "*Bootstrap Circuit Design Manual*"

The BSD characteristics for SLIMDIP series and the circuit current characteristics in switching situation of P-side IGBT are described as below.

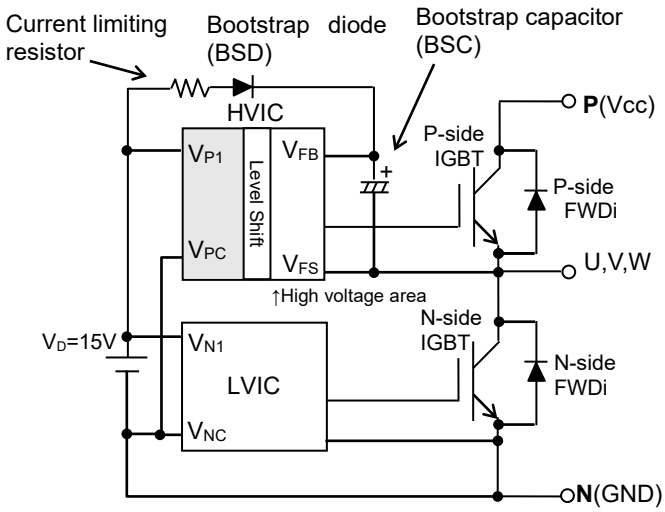

Fig.4-1-1 Bootstrap Circuit Diagram

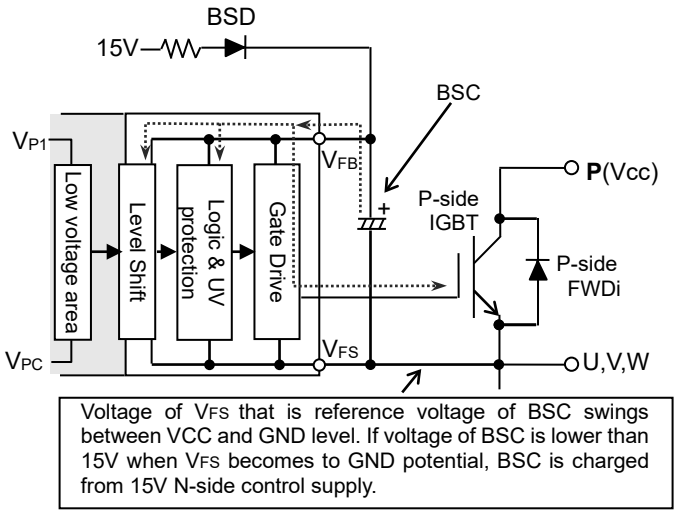

Fig.4-1-2 Bootstrap Circuit Diagram

4.2 Bootstrap Supply Circuit Current at Switching State

Bootstrap supply circuit current (I_{DB}) at steady state needs 0.1mA at maximum to activate HVIC. But at switching state, because gate charge and discharge are repeated by switching, the circuit current exceeds 0.1mA and increases proportional to carrier frequency. For reference, Fig.4-2 shows typical I_{DB} - carrier frequency fc characteristics for each current rating product.

Conditions: V_D=V_{DB}=15V, Vcc=450V, Tj=125°C at which I_{DB} becomes larger

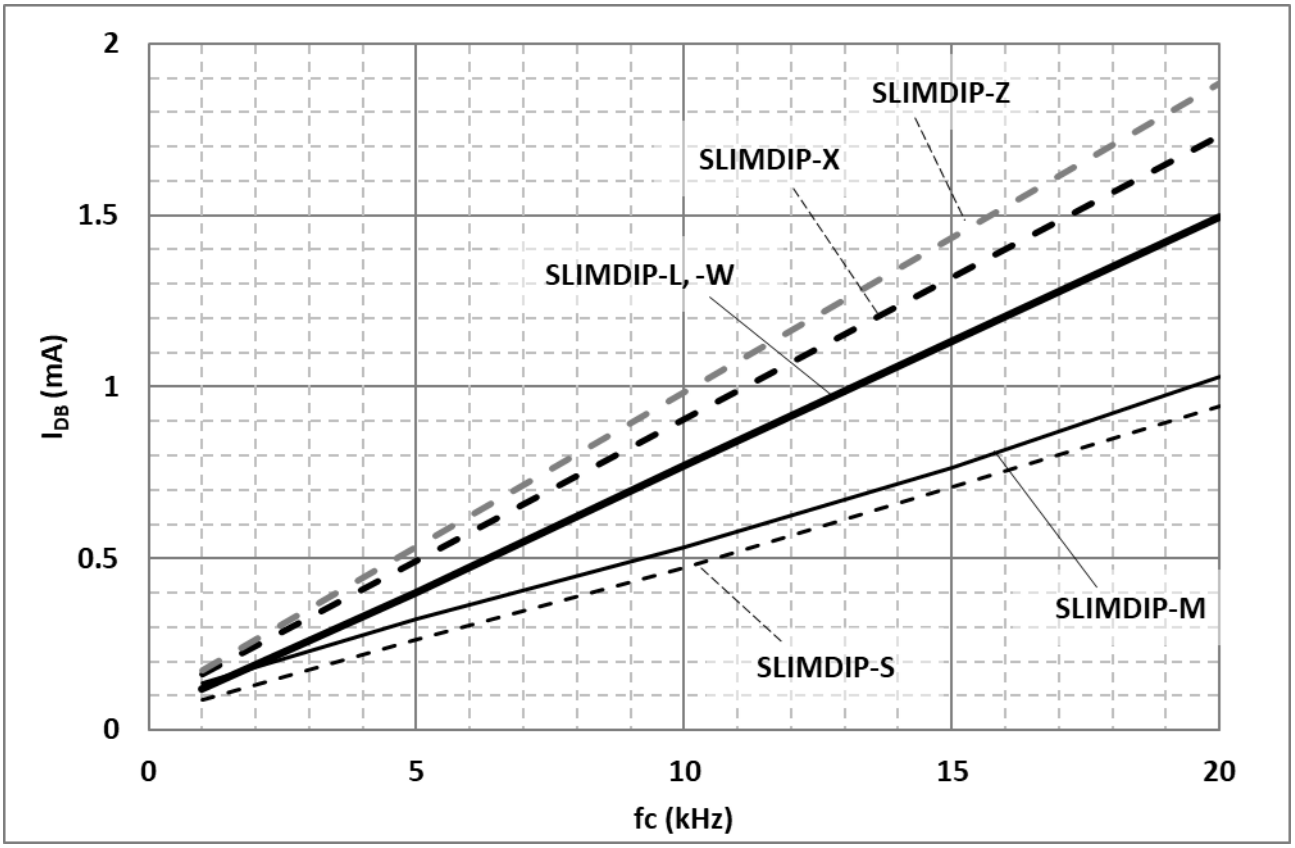

Fig.4-2 I_{DB} vs. Carrier frequency

4.3 Note for designing the bootstrap circuit

When each device for bootstrap circuit is designed, it is necessary to consider various conditions such as temperature characteristics, change by lifetime, variation and so on. Note for designing these devices are listed as below. For more detail information about driving by the bootstrap circuit, refer the DIPIPM application note "*Bootstrap Circuit Design Manual*"

(1) Bootstrap capacitor

Electrolytic capacitors are generally used for BSC, and ceramic capacitors with large capacitance are also applied recently. But it is necessary to note DC bias characteristic of the ceramic capacitor, especially large capacitance type; when applying DC voltage, it is considerably different from that of electrolytic capacitor. Some differences of capacitance characteristics between electrolytic and ceramic capacitors are listed in Table 4-3-1.

Table 4-3-1 Differences of capacitance characteristics between electrolytic and ceramic capacitors

	Electrolytic capacitor	Ceramic capacitor (large capacitance type)
Temperature characteristics (Ta:-20~ 85°C)	•Aluminum type: Low temp.: -10% High temp: +10% •Conductive polymer aluminum solid type: Low temp.: -5% High temp: +10%	Different due to temp. characteristics rank Low temp.: -5%~0% High temp.: -5%~-10% (in the case of B,X5R,X7R ranks)
DC bias characteristics (Applying DC15V)	Nothing within rating voltage	Different due to temp. characteristics, rating voltage, package size and so on **-70%**~-15%

Electrolytic capacitors have good DC bias characteristic; however it is necessary to note its ripple capability by repetitive charge and discharge, its life time which is greatly affected by ambient temperature and so on. Above characteristics are just example data which are obtained from the WEB, please refer to the capacitor manufacturers about detailed characteristics.

(2) Bootstrap diode

SLIMDIP integrates bootstrap diode for P-side driving supply. This BSD incorporates current limiting resistor. The V_F-I_F characteristics (including voltage drop by built-in current limiting resistor) is shown in Fig.4-3-1 and Table 4-3-2.

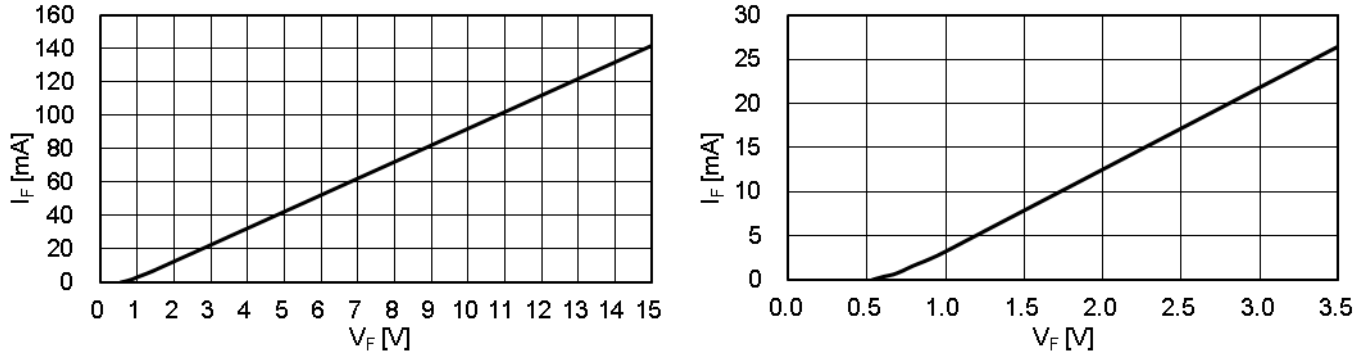

Fig.4-3-1 V_F-I_F curve for bootstrap Diode (typical, the right figure is enlarged view)

Table 4-3-2 Electric characteristics of built-in bootstrap diode

Item	Symbol	Condition	Min.	Typ.	Max.	Unit
Bootstrap Di forward voltage	V_F	I_F=10mA including voltage drop by limiting resistor	1.1	1.7	2.3	V
Built-in limiting resistance	R	Included in bootstrap Di	80	100	120	Ω

4.4 Initial charging in bootstrap circuit

In the case of applying bootstrap circuit, it is necessary to charge to the BSC initially because voltage of BSC is 0V at initial state or it may go down to the trip level of under voltage protection after long suspending period (even 1s). BSC charging is performed by turning on all N-side IGBT normally. When outer load (e.g. motor) is connected to the DIPIPM, BSC charging may be performed by turning on only one phase N-side IGBT since potential of all output terminals will go down to GND level through the wiring in the motor. But its charging efficiency might become lower due to some cause. (e.g. wiring resistance of motor)

There are mainly two procedures for BSC charging. One is performed by one long pulse, and another is conducted by multiple short pulses. Multi pulse method is used when there are some restriction like control supply capability and so on.

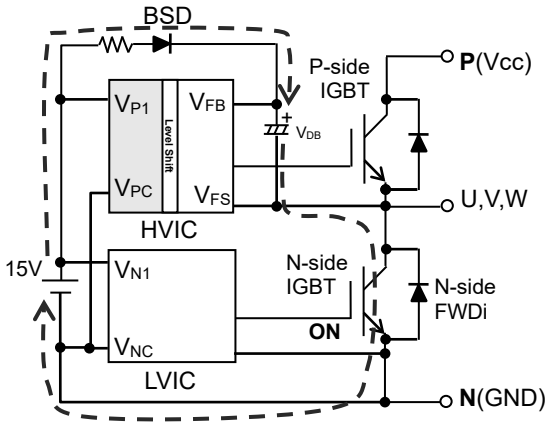

Fig.4-4-1 Initial charging root

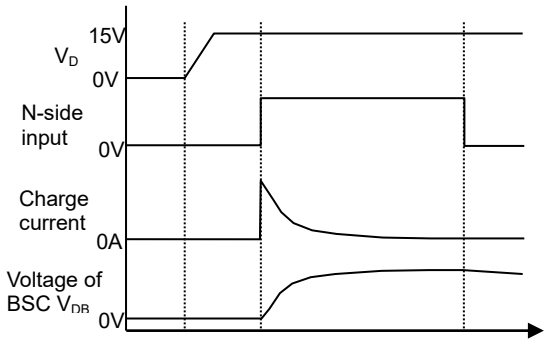

Fig.4-4-2 Example of waveform by one charging pulse

Initial charging needs to be performed until voltage of BSC exceeds recommended minimum supply voltage 13V. (It is recommended to charge as high as possible with consideration for voltage drop between the end of charging and start of inverter operation.)

After BSC was charged, it is recommended to input one ON pulse to the P-side input for reset of internal IC state before starting system. Input pulse width is needed to be longer than allowable minimum input pulse width PWIN(on). (e.g. 0.7μs or more for SLIMDIP. Refer the datasheet for each product.)

CHAPTER 5 PACKAGE HANDLING

5.1 Packaging Specification

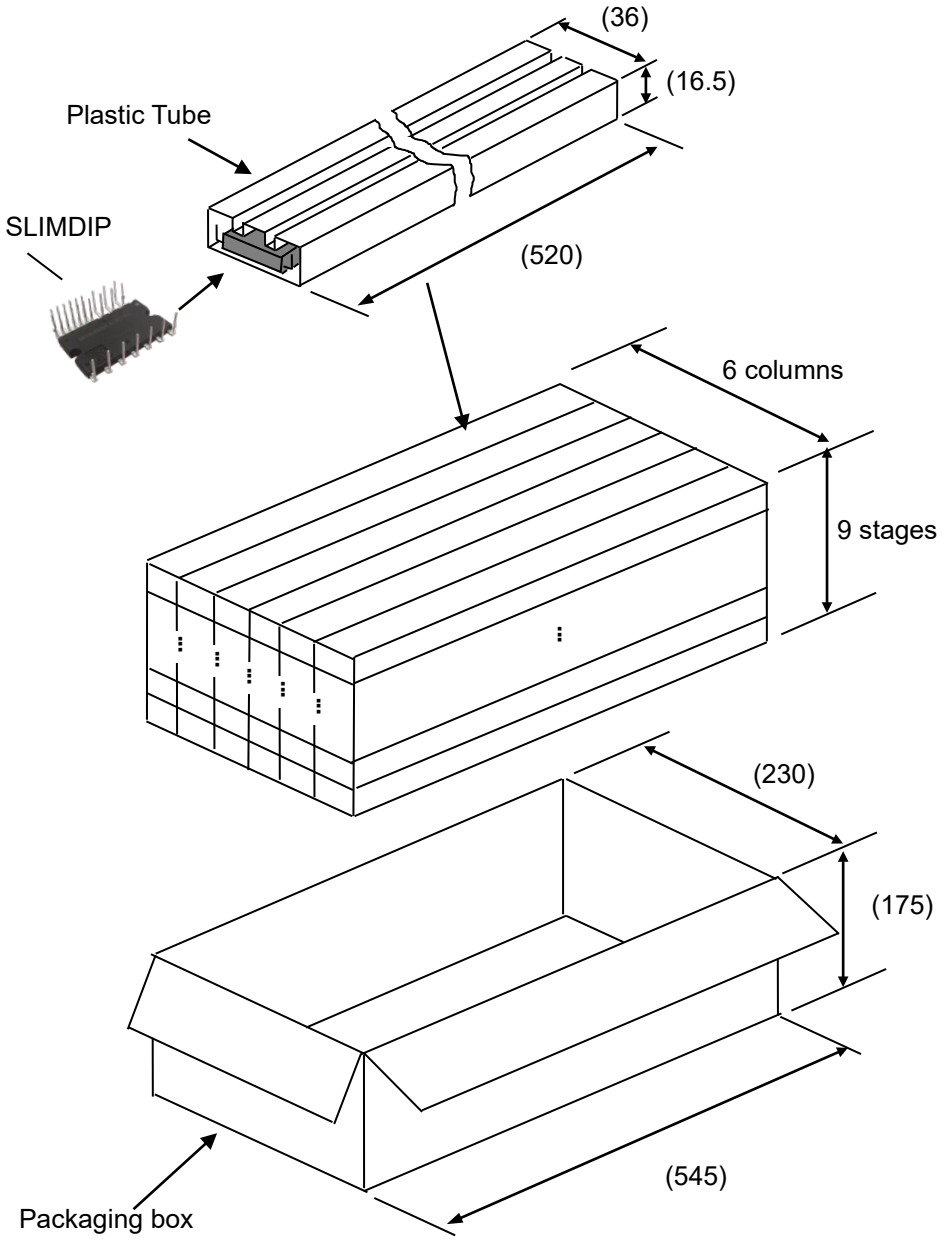

Quantity:

15pcs per 1 tube

Total amount in one box (max):

Tube Quantity: 6 × 9=54pcs
IPM Quantity: 54 × 15=810pcs

When it isn't fully filled by tubes at top stage, cardboard spacers or empty tubes are inserted for filling the space of top stage.

Weight (max):

About 5.5g per 1pcs of DIPIPM
About 170g per 1 tube
About 10.2kg per 1 box

Spacers are put on the top and bottom of the box. If there is some space on top of the box, additional buffer materials are also inserted.

Fig.5-1-1 Packaging Specification

5.2 Handling Precautions

⚠ Cautions	
Transportation	・Put package boxes in the correct direction. Putting them upside down, leaning them or giving them uneven stress might cause electrode terminals to be deformed or resin case to be damaged. ・Throwing or dropping the packaging boxes might cause the devices to be damaged. ・Wetting the packaging boxes might cause the breakdown of devices when operating. Pay attention not to wet them when transporting on a rainy or a snowy day.
Storage	・We recommend temperature and humidity in the ranges 5-35°C and 45-75%, respectively, for the storage of modules. The quality or reliability of the modules might decline if the storage conditions are much different from the above.
Long storage	・When storing modules for a long time (more than one year), keep them dry. Also, when using them after long storage, make sure that there is no visible flaw, stain or rust, etc. on their exterior.
Surroundings	・Keep modules away from places where water (including dew condensation) or organic solvent may attach to them directly or where corrosive gas, explosive gas, fine dust or salt, etc. may exist. They might cause serious problems.
Flame resistance	・The epoxy resin and the case materials are flame-resistant type (UL standard 94-V0), but they are not noninflammable.
Static electricity	・ICs and power chips with MOS gate structure are used for the DIPIPM power modules. Please keep the following notices to prevent modules from being damaged by static electricity. (1) Precautions against the device destruction caused by the ESD When the ESD of human bodies, packaging and etc. are applied to terminal, it may damage and destroy devices. The basis of anti-electrostatic is to inhibit generating static electricity possibly and quick dissipation of the charged electricity. ・Containers that charge static electricity easily should not be used for transit and for storage. ・Terminals should be always shorted with a carbon cloth or the like until just before using the module. Never touch terminals with bare hands. ・Should not be taking out DIPIPM from tubes until just before using DIPIPM and never touch terminals with bare hands. ・During assembly and after taking out DIPIPM from tubes, always earth the equipment and your body. It is recommended to cover the work bench and its surrounding floor with earthed conductive mats. ・When the terminals are open on the printed circuit board with mounted modules, the modules might be damaged by static electricity on the printed circuit board. ・If using a soldering iron, earth its tip. (2)Notice when the control terminals are open ・When the control terminals are open, do not apply voltage between the collector and emitter. It might cause malfunction. ・Short the terminals before taking a module off.

Important Notice

The information contained in this datasheet shall in no event be regarded as a guarantee of conditions or characteristics. This product has to be used within its specified maximum ratings, and is subject to customer's compliance with any applicable legal requirement, norms and standards.

Except as otherwise explicitly approved by Mitsubishi Electric Corporation in a written document signed by authorized representatives of Mitsubishi Electric Corporation, our products may not be used in any applications where a failure of the product or any consequences of the use thereof can reasonably be expected to result in personal injury.

In usage of power semiconductor, there is always the possibility that trouble may occur with them by the reliability lifetime such as Power Cycle, Thermal Cycle or others, or when used under special circumstances (e.g. condensation, high humidity, dusty, salty, highlands, environment with lots of organic matter / corrosive gas / explosive gas, or situations which terminals of semiconductor products receive strong mechanical stress). Therefore, please pay sufficient attention to such circumstances. Further, depending on the technical requirements, our semiconductor products may contain environmental regulation substances, etc. If there is necessity of detailed confirmation, please contact our nearest sales branch or distributor.

The contents or data contained in this datasheet are exclusively intended for technically trained staff. Customer's technical departments should take responsibility to evaluate the suitability of Mitsubishi Electric Corporation product for the intended application and the completeness of the product data with respect to such application. In the customer's research and development, please evaluate it not only with a single semiconductor product but also in the entire system, and judge whether it's applicable. As required, pay close attention to the safety design by installing appropriate fuse or circuit breaker between a power supply and semiconductor products to prevent secondary damage. Please also pay attention to the application note and the related technical information.

Keep safety first in your circuit designs!

Mitsubishi Electric Corporation puts the maximum effort into making semiconductor products better and more reliable, but there is always the possibility that trouble may occur with them. Trouble with semiconductors may lead to personal injury, fire or property damage. Remember to give due consideration to safety when making your circuit designs, with appropriate measures such as (i) placement of substitutive, auxiliary circuits, (ii) use of non-flammable material or (iii) prevention against any malfunction or mishap.

Notes regarding these materials

- These materials are intended as a reference to assist our customers in the selection of the Mitsubishi Electric Semiconductor product best suited to the customer's application; they do not convey any license under any intellectual property rights, or any other rights, belonging to Mitsubishi Electric Corporation or a third party.
- Mitsubishi Electric Corporation assumes no responsibility for any damage, or infringement of any third-party's rights, originating in the use of any product data, diagrams, charts, programs, algorithms, or circuit application examples contained in these materials.
- All information contained in these materials, including product data, diagrams, charts, programs and algorithms represents information on products at the time of publication of these materials, and are subject to change by Mitsubishi Electric Corporation without notice due to product improvements or other reasons. It is therefore recommended that customers contact Mitsubishi Electric Corporation or an authorized Mitsubishi Electric Semiconductor product distributor for the latest product information before purchasing a product listed herein. The information described here may contain technical inaccuracies or typographical errors. Mitsubishi Electric Corporation assumes no responsibility for any damage, liability, or other loss rising from these inaccuracies or errors.
  Please also pay attention to information published by Mitsubishi Electric Corporation by various means, including the Mitsubishi Electric Semiconductor home page (http://www.MitsubishiElectric.com/semiconductors/).
- When using any or all of the information contained in these materials, including product data, diagrams, charts, programs, and algorithms, please be sure to evaluate all information as a total system before making a final decision on the applicability of the information and products. Mitsubishi Electric Corporation assumes no responsibility for any damage, liability or other loss resulting from the information contained herein.
- Mitsubishi Electric Corporation semiconductors are not designed or manufactured for use in a device or system that is used under circumstances in which human life is potentially at stake. Please contact Mitsubishi Electric Corporation or an authorized Mitsubishi Electric Semiconductor product distributor when considering the use of a product contained herein for any specific purposes, such as apparatus or systems for transportation, vehicular, medical, aerospace, nuclear, or undersea repeater use.
- The prior written approval of Mitsubishi Electric Corporation is necessary to reprint or reproduce in whole or in part these materials.
- If these products or technologies are subject to the Japanese export control restrictions, they must be exported under a license from the Japanese government and cannot be imported into a country other than the approved destination.
  Any diversion or re-export contrary to the export control laws and regulations of Japan and/or the country of destination is prohibited.
- Please contact Mitsubishi Electric Corporation or an authorized Mitsubishi Electric Semiconductor product distributor for further details on these materials or the products contained therein.

© MITSUBISHI ELECTRIC CORPORATION. ALL RIGHTS RESERVED.
DIPIPM, SLIMDIP and CSTBT are trademarks of MITSUBISHI ELECTRIC CORPORATION.