MITSUBISHI ELECTRIC
Changes for the Better

SiC MOSFET Trench-Gate Structure
– High Reliability –

MITSUBISHI ELECTRIC CORPORATION

SiC MOSFET Trench-Gate Structure – High Reliability –

- **Mitsubishi Electric employs a proprietary trench gate structure featuring a Bottom P-Well (BPW) formed at the trench bottom, where electric field concentration is most likely to occur. This unique design significantly alleviates electric field stress on the gate oxide.**
- **As a result, gate oxide lifetime equal to or better than that of conventional planar-gate SiC MOSFETs is achieved, greatly enhancing long-term product reliability.**
- **Even when considering the oxide electric field levels and operating conditions expected in real-world applications, sufficient lifetime margin is secured to meet required reliability targets.**

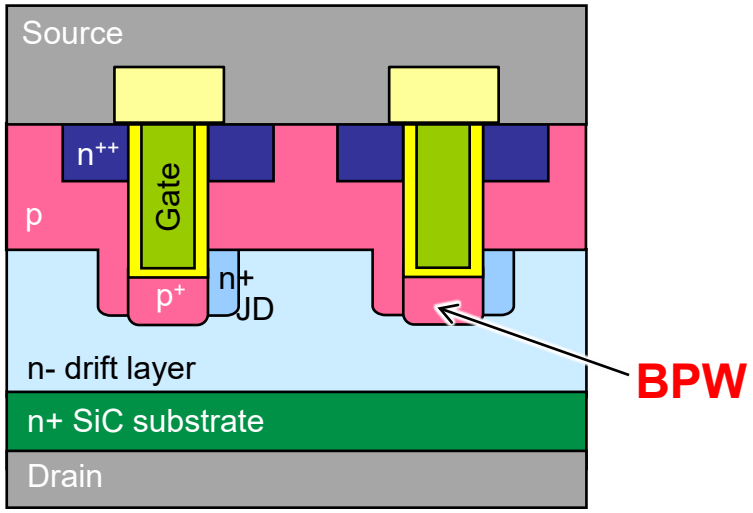

Trench-Gate Structure of SiC MOSFET

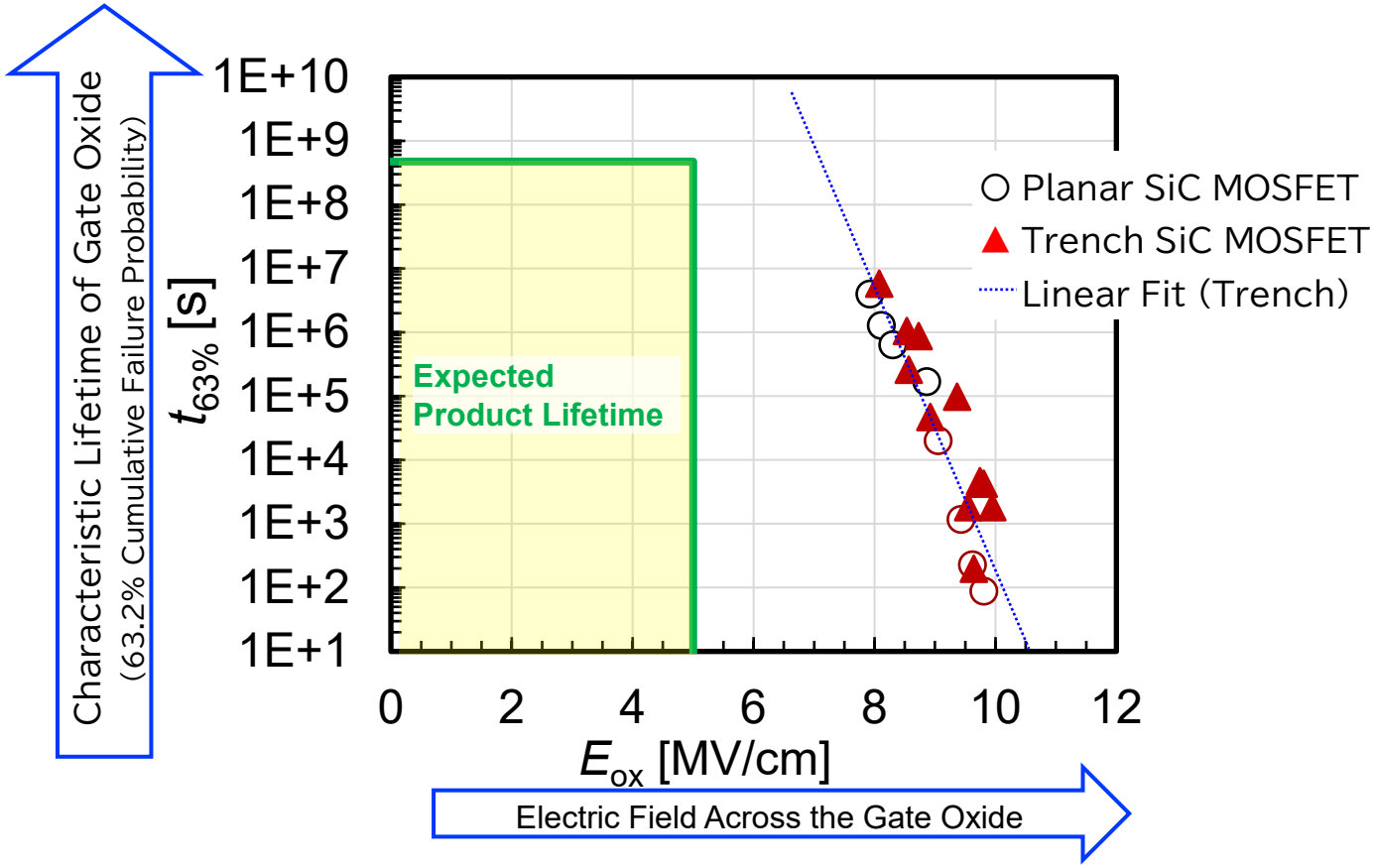

(note) Expected Product Lifetime Assumptions
- Gate Oxide Electric Field: 5 MV/cm Equivalent
- Mission Profile: 15-Year Equivalent

© Mitsubishi Electric Corporation

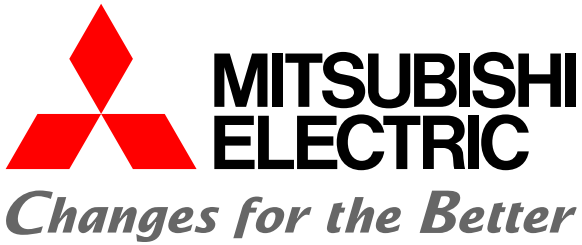
MITSUBISHI
ELECTRIC
Changes for the Better